Title Page

2012 Chevrolet Volt / Opel Ampera Service Manual

Volume 1

Foreword

This manual provides information on the diagnosis, service procedures, adjustments, and specifications for the 2012 Volt / Ampera.

The technicians who understand the material in this manual and in the appropriate Dealer Service Bulletins better serve the vehicle owners.

When this manual refers to a brand name, a part number, or a specific tool, you may use an equivalent product in place of the recommended item. All information, illustrations, and specifications in this manual are based on the latest product information available at the time of publication approval. General Motors reserves the right to make changes at any time without notice.

Published by

North American Operations

General Motors Corporation

Warren, Michigan 48090

©2010 GENERAL MOTORS

ALL RIGHTS RESERVED

The information cut-off date is 09/19/08.

LITHO IN U.S.A.

No part of this manual may be reproduced, stored in any retrieval system, or transmitted in any form or by any means including, but not limited to, electronic, mechanical, photocopying, and recording without the prior written permission of General Motors. This applies to all text, illustrations, and tables.

© Copyright Chevrolet. All rights reserved

Definition of Danger, Warning, Caution, and Note

The diagnosis and repair procedures in a GM Service Manual contain both general and specific Dangers, Warnings, Cautions, Notes or Importants. GM is dedicated to the presentation of service information that helps the technician to diagnose and repair the systems necessary for the proper operation of the vehicle, however, certain procedures may present a hazard to the technician if they are not followed in the recommended manner. Dangers, Warnings, Cautions and Notes or Importants are elements designed to prevent these hazards, however, not all hazards can be foreseen. This information is placed at strategic locations within the service manual. This information is designed to prevent the following from occurring:

- Serious bodily injury or death to the technician
- Damage to the vehicle
- Unnecessary vehicle repairs
- Unnecessary component replacement
- Improper repair or replacement of vehicle components.
- Any warning or caution that appears in this service category is referenced from the individual service categories.

DANGER Defined

When encountering a DANGER, you will be asked to take a necessary action or not to take a prohibited action. If a DANGER is not heeded, the following consequences may occur:

- Serious bodily injury or death to the technician
- Serious bodily injury or death to other technicians in the workplace area

WARNING Defined

When encountering a WARNING, you will be asked to take a necessary action or not to take a prohibited action. If a WARNING is not heeded, the following consequences may occur:

- Serious bodily injury to the technician
- Serious bodily injury to other technicians in the workplace area
- Serious bodily injury to the driver and/or passenger(s) of the vehicle, if the vehicle has been improperly repaired

CAUTION Defined

CAUTIONS call special attention to a necessary action or to a prohibited action. If a CAUTION is not heeded, the following consequences may occur:

- Damage to the vehicle
- Unnecessary vehicle repairs
- Unnecessary component replacement
- Improper operation or performance of the system or component under repair
- Damage to any systems or components which are dependent upon the proper operation of the system or component under repair
- Improper operation or performance of any systems or components which are dependent upon the proper operation or performance of the system or component under repair
- Damage to fasteners, basic tools, or special tools
- The leakage of coolant, lubricant, or other vital fluids

NOTE or IMPORTANT Defined

NOTE and IMPORTANT statements emphasize a necessary characteristic of a diagnostic or repair procedure. NOTE or IMPORTANT statements are designed to do the following:

- Clarify a procedure
- Present additional information for accomplishing a procedure
- Give insight into the reason or reasons for performing a procedure in the manner recommended
- Present information that will help to accomplish a procedure in a more effective manner
- Present information that gives the technician the benefit of past experience in accomplishing a procedure with greater ease

&#169© Copyright Chevrolet. All rights reserved

ABS Component Handling Warning

Warning: Certain components in the Antilock Brake System (ABS) are not intended to be serviced individually. Attempting to remove or disconnect certain system components may result in personal injury and/or improper system operation. Only those components with approved removal and installation procedures should be serviced.

© Copyright Chevrolet. All rights reserved

Actions to Take When Working with Fuel Warning

Warning: Fuel Vapours can collect while servicing fuel system parts in enclosed areas such as a boot. To reduce the risk of fire and increased exposure to vapours:

- Use forced air ventilation such as a fan set outside of the boot.
- Plug or cap any fuel system openings in order to reduce fuel vapour formation.
- Clean up any spilled fuel immediately.
- Avoid sparks and any source of ignition.
- Use signs to alert others in the work area that fuel system work is in process.

&#169© Copyright Chevrolet. All rights reserved

Approved Equipment for Collision Repair Warning

Warning: To avoid personal injury when exposed to welding flashes or to galvanized (Zinc Oxide) metal toxic fumes while grinding/cutting on any type of metal or sheet molded compound, you must work in a properly ventilated area, wearing an approved respirator, eye protection, earplugs, welding gloves, and protective clothing.

© Copyright Chevrolet. All rights reserved

Assistant Driving Warning

Warning: An assistant should drive the vehicle while the technician checks for the location of the reported condition. Otherwise, personal injury could result.

© Copyright Chevrolet. All rights reserved

Battery Disconnect Warning

Warning: Unless directed otherwise, the ignition and start switch must be in the OFF or LOCK position, and all electrical loads must be OFF before servicing any electrical component. Disconnect the negative battery cable to prevent an electrical spark should a tool or equipment come in contact with an exposed electrical terminal. Failure to follow these precautions may result in personal injury and/or damage to the vehicle or its components.

For Vehicles equipped with OnStar® (UE1) with Back Up Battery:

The Back Up Battery is a redundant power supply to allow limited OnStar® functionality in the event of a main vehicle battery power disruption to the VCIM (OnStar®module). Do not disconnect the main vehicle battery or remove the OnStar® fuse with the ignition key in any position other than OFF. Retained accessory power (RAP) should be allowed to time out or be disabled (simply opening the driver door should disable RAP) before disconnecting power. Disconnecting power to the OnStar® module in any way while the ignition is On or with RAP activated may cause activation of the OnStar® Back-Up Battery (BUB) system and will discharge and permanently damage the back-up battery. Once the Back-Up Battery is activated it will stay on until it has completely discharged. The BUB is not rechargeable and once activated the BUB must be replaced.

© Copyright Chevrolet. All rights reserved

Brake Dust Warning

Warning: Avoid taking the following actions when you service wheel brake parts:

- Do not grind brake linings.
- Do not sand brake linings.
- Do not clean wheel brake parts with a dry brush or with compressed air.

Some models or aftermarket brake parts may contain asbestos fibers which can become airborne in dust. Breathing dust with asbestos fibers may cause serious bodily harm. Use a water-dampened cloth in order to remove any dust on brake parts. Equipment is available commercially in order to perform this washing function. These wet methods prevent fibers from becoming airborne.

&#169© Copyright Chevrolet. All rights reserved

Brake Fluid Irritant Warning

Warning: Brake fluid may irritate eyes and skin. In case of contact, take the following actions:

- Eye contact--rinse thoroughly with water.
- Skin contact--wash with soap and water.
- If ingested--consult a physician immediately.

&#169© Copyright Chevrolet. All rights reserved

Checking Hot Transmission Fluid through Drain Plug Hole Warning

Warning: The engine must be running when the transmission fluid fill plug is removed, or excessive fluid loss will occur. Transmission fluid may be hot. Since the actual fluid level is unknown, stand clear when removing the fill plug. Have a container ready to capture any lost fluid. Do not turn the engine off with the fill plug removed, as you can be injured by hot transmission fluid being expelled out of the oil fill opening.

© Copyright Chevrolet. All rights reserved

Cleaning Solvent Warning

Warning: Bodily injury may occur if the cleaning solvent is inhaled or exposed to the skin.

© Copyright Chevrolet. All rights reserved

Collision Sectioning Warning

Warning: Sectioning should be performed only in the recommended areas. Failure to do so may compromise the structural integrity of the vehicle and cause personal injury if the vehicle is in a collision.

© Copyright Chevrolet. All rights reserved

Cracked Window Warning

Warning: If a window is cracked but still intact, crisscross the window with masking tape in order to reduce the risk of damage or personal injury.

© Copyright Chevrolet. All rights reserved

Defroster Outlet Warning

Warning: If broken glass falls into the defroster outlets, it can be blown into the passenger compartment and cause personal injury.

© Copyright Chevrolet. All rights reserved

Exhaust Service Warning

Warning: In order to avoid being burned, do not service the exhaust system while it is still hot. Service the system when it is cool.

© Copyright Chevrolet. All rights reserved

Express Window Down Warning

Warning: Disconnect the power window switch when working inside the driver door. When operated, the Express Up/Down Feature allows the door window to move very quickly, without stopping, which could cause personal injury.

© Copyright Chevrolet. All rights reserved

Eye Protection Warning

Warning: Approved safety glasses and gloves should be worn when performing this procedure to reduce the chance of personal injury.

© Copyright Chevrolet. All rights reserved

Foam Sound Deadeners Warning

Warning: Foam sound deadeners must be removed from areas within 152.4 mm (6 in) of where flame is to be used for body repairs. When reinstalling foam sound deadeners, avoid inhaling fumes as bodily injury may result.

© Copyright Chevrolet. All rights reserved

Fuel and Evaporative Emission Pipe Warning

Warning: In order to reduce the risk of fire and personal injury observe the following items:

- Replace all nylon fuel pipes that are nicked, scratched or damaged during installation, do not attempt to repair the sections of the nylon fuel pipes
- Do not hammer directly on the fuel harness body clips when installing new fuel pipes. Damage to the nylon pipes may result in a fuel leak.
- Always cover nylon vapor pipes with a wet towel before using a torch near them. Also, never expose the vehicle to temperatures higher than 115°C (239°F) for more than one hour, or more than 90°C (194°F) for any extended period.
- Apply a few drops of clean engine oil to the male pipe ends before connecting fuel pipe fittings. This will ensure proper reconnection and prevent a possible fuel leak. (During normal operation, the O-rings located in the female connector will swell and may prevent proper reconnection if not lubricated.)

&#169© Copyright Chevrolet. All rights reserved

Volt
- SERVICE MANUAL
  - 1. Preface
    - Preface
      - Introduction
        - Danger
        - Title Page
      - Dangers, Warnings, and Cautions
        - Introduction
          - Definition of Danger, Warning, Caution, and Note
          - ABS Component Handling Warning
          - Actions to Take When Working with Fuel Warning
          - Approved Equipment for Collision Repair Warning
          - Assistant Driving Warning
          - Battery Disconnect Warning
          - Brake Dust Warning
          - Brake Fluid Irritant Warning
          - Checking Hot Transmission Fluid through Drain Plug Hole Warning
          - Cleaning Solvent Warning
          - Collision Sectioning Warning
          - Cracked Window Warning
          - Defroster Outlet Warning
          - Exhaust Service Warning
          - Express Window Down Warning
          - Eye Protection Warning
          - Foam Sound Deadeners Warning
          - Fuel and Evaporative Emission Pipe Warning
          - Fuel gauge Leak Warning
          - Fuel Pipe Fitting Warning
          - Fuel Storage Warning
          - Fuel Vapour in Evaporative Emission Components Warning
          - Petrol/Petrol Vapours Warning
          - Glass and Sheet Metal Handling Warning
          - Halogen Bulb Warning
          - Bonnet Hold-Open Device Warning
          - Hot Exhaust System Warning
          - Moving Parts and Hot Surfaces Warning
          - Protective Goggles and Glove Warning
          - Relieving Fuel Pressure Warning
          - Road Test Warning
          - Safety Glasses and Compressed Air Warning
          - Safety Glasses Warning
          - Safety Goggles and Fuel Warning
          - SIR Deployed Inflator Modules Are Hot Warning

-
- SIR Inflatable Module Deployment Outside Vehicle Warning
- SIR Inflator Module Disposal Warning
- SIR Inflator Module Handling and Storage Warning
- SIR Seatbelt Pretensioner Handling Warning
- SIR Special Tool Warning
- SIR Warning
- Steering Angle Sensor Initialisation Warning
- Torque-to-Yield Fastener Warning
- Window Retention Warning
- Work Stall Test Warning
- Air in the Power Steering System Caution
- Avoid Chipping or Scratching the Coating Caution
- Ball Stud Removal Caution
- Belt Dressing Caution
- Brake Calliper Caution
- Brake Fluid Effects on Paint and Electrical Components Caution
- Clearcoat/Ultraviolet Screeners Caution
- Component Fastener Tightening Caution
- Drive Axle Caution
- Engine Coolant Thermostat Housing Caution
- Exterior Trim Emblem Removal Caution
- Fastener Caution
- Filling the Master Cylinder Caution
- Fuel and Evaporative Emission Hose/Pipe Connection Cleaning Caution
- Heated Oxygen and Oxygen Sensor Caution
- Heated Oxygen Sensor Resistance Learn Reset Caution
- Installing Hoses without Twists or Bends Caution
- Paint Damage Caution
- Pipe Spanner Positioning Caution
- Power Steering Hose Disconnected Caution
- Silicon Contamination of Heated Oxygen Sensors Caution
- Steering Column in Lock Position Caution
- Steering Gear Preload Adjustment Caution
- Steering Wheel in the Full Turn Position Caution
- Steering Wheel Straight and Column Locked Caution
- Test Probe Caution
- Three-Way Catalytic Converter Damage Caution
- Torque Reaction Against Timing Drive Chain Caution
- Torque-to-Yield Fastener Caution
- Transmission Fluid Vent Cap Removal Caution
- Transmission Overfill Caution
- Using Proper Power Steering Fluid Caution

Tappet Priming Caution

- Window Edge Damage Caution
- 2. General Information
  - General Information
    - Specifications
      - Safety Regulations for Hybrid/Electric Vehicles
    - Introduction
      - Arrows and Symbols
      - Vehicle, Engine and Transmission ID and VIN Location, Derivative and Usage
      - Vehicle Certification, Tyre Placard, Anti-Theft, and Service Parts ID Label
      - RPO Code List
      - Fasteners
      - Thread Inserts
      - Registered and Non-Registered Trademarks
      - Lifting and Jacking the Vehicle
    - Diagnostic Information and Procedures
      - Customer Concern Verification Sheets
    - Special Tools and Equipment
      - Special Tools Ordering Information
  - Air/Wind Noise
    - Diagnostic Information and Procedures
      - Air/Wind Noise
      - Tracing Powder or Chalk Test
      - Air Pressure Test
      - Soap Suds or Bubble Test
  - Maintenance and Lubrication
    - Specifications
      - Approximate Fluid Capacities
      - Fluid and Lubricant Recommendations
      - Maintenance Items
    - Maintenance
      - GM Oil Life System Resetting
  - Vibration Diagnosis and Correction
    - Specifications
      - Tyre and Wheel Runout Specifications
    - Diagnostic Information and Procedures
      - Vibration Analysis - Hub and/or Axle Input
      - Vibration Analysis - Engine
      - Engine Order Classification
      - Vibration Analysis - Engine/Accessory Isolation
      - Vibration Analysis - Engine Balance
      - Vibration Diagnostic Aids - Vibration Intermittent or Not Duplicated
      - Brake Disc/Drum Balance Inspection
- 3. Body Hardware and Trim

- Exterior Trim
  - Specifications
    - Fastener Tightening Specifications
  - Repair Instructions
    - Emblem/Nameplate Replacement
    - Body Panel Paint Protector Replacement – VGC
    - Front Side Door Window Frame Rear Applique Replacement
    - Tailgate Side Applique Replacement
    - Quarter Panel Tail Lamp Upper Moulding Replacement
    - Rear Side Door Window Frame Rear Applique Replacement
    - Radiator Grille Replacement
    - Bonnet Rear Reveal Moulding Replacement
    - Front Wing Upper Rear Moulding Replacement
    - Sill Panel Moulding Replacement
    - Roof Panel Joint Finish Molding Replacement
    - Rear End Spoiler Replacement
  - Special Tools and Equipment
    - Special Tools
- Floor Coverings and Headlinings
  - Specifications
    - Adhesives, Fluids, Lubricants, and Sealers
  - Repair Instructions
    - Eliminating Unwanted Odors in Vehicles
    - Floor Carpet Drying
    - Front Floor Panel Carpet Replacement
    - Front Side Door Opening Floor Carpet Retainer Replacement
    - Rear Side Door Opening Floor Carpet Retainer Replacement
    - Headlining Trim Panel Replacement
- Instrument Panel and Console Trim
  - Specifications
    - Fastener Tightening Specifications
  - Repair Instructions
    - Instrument Panel Lower Trim Panel Insulator Replacement
    - Steering Column Opening Lower Filler Replacement
    - Instrument Panel Side Trim Panel Replacement
    - Instrument Panel Upper Trim Panel Replacement
    - Instrument Panel Cluster Trim Plate Cover Replacement
    - Instrument Panel Cluster Trim Plate Replacement
    - Instrument Panel Upper Outer Trim Panel Replacement – Right Side
    - Instrument Panel Upper Outer Trim Panel Replacement – Left Side
    - Instrument Panel Lower Extension Trim Panel Replacement
    - Upper Trim Pad Retainer Replacement
      Lower Trim Pad Retainer Replacement – Inner

- Lower Trim Pad Retainer Replacement – Outer
- Instrument Panel Upper Centre Compartment Replacement
- Instrument Panel Lower Compartment Replacement
- Instrument Panel Compartment Door Dampener Replacement
- Instrument Panel Tie Bar Replacement
- Instrument Panel Wiring Harness Replacement
- Front Floor Console Compartment Door Hinge Replacement
- Front Floor Console Compartment Door Latch Replacement
- Front Floor Console Side Cover Replacement
- Front Floor Console Extension Replacement - Right Side
- Front Floor Console Extension Replacement - Left Side
- Front Floor Console Retainer Replacement
- Front Floor Console Replacement
- Front Floor Rear Console Replacement
- Front Floor Console Armrest Replacement
- Front Floor Console Armrest Hinge Cover Replacement
- Front Floor Console Trim Plate Replacement
- Front Floor Console Applique Replacement
- Front Floor Console Rear Cover Replacement
- Roof Console Replacement

Interior Trim and Panelling

Specifications

- Fastener Tightening Specifications

Repair Instructions

- Front Side Door Accessory Switch Mount Plate Replacement – Driver's Side Door
- Front Side Door Accessory Switch Mount Plate Replacement – Passenger Side Door
- Rear Side Door Accessory Switch Mount Plate Replacement
- Front Side Door Trim Replacement
- Rear Side Door Window Garnish Moulding Replacement
- Front Side Door Window Garnish Moulding Replacement
- Roof Rail Rear Assist Handle Replacement
- Inside Rearview Mirror Mount Plate Cover Replacement
- Sunshade Replacement
- Sunshade Support Replacement
- Windscreen Side Garnish Moulding Replacement
- Centre Pillar Trim Panel Replacement
- Body Lock Pillar Upper Trim Panel Replacement
- Quarter Inner Trim Finish Panel Replacement
- Rear End Trim Finish Panel Replacement
- Rear Compartment Floor Stowage Compartment Cover Handle Replacement
- Rear Compartment Floor Stowage Trim Compartment Replacement
- Rear Compartment Floor Panel Trim Replacement

Rear Side Door Trim Replacement

- Liftgate Window Side Garnish Moulding Replacement
- Liftgate Window Upper Garnish Moulding Replacement
- Tailgate Upper Trim Finish Panel Replacement
- Tailgate Lower Trim Finish Panel Replacement
- Body Side Air Outlet Deflector Replacement

4. Body Repair
  - Bolted Exterior Body Panels and Closures
    - Specifications
      - Fastener Tightening Specifications
    - Diagnostic Information and Procedures
      - DTC B3006
      - DTC P257D-P257F
      - Symptoms - Bolted Exterior Body Panels and Closures
      - Bonnet Ajar Indicator/Message Malfunction
    - Repair Instructions
      - Front Suspension Strut Housing Brace Replacement
      - Bonnet Primary Catch Release Cable Replacement
      - Front Side Door Adjustment
      - Front Side Door Replacement
      - Rear Side Door Adjustment
      - Rear Side Door Replacement
      - Front Wing Replacement – Left Side
      - Front Wing Replacement – Right Side
      - Liftgate Adjustment
      - Liftgate Replacement
      - Front Side Door Upper Hinge and Lower Hinge Replacement
      - Bonnet Hinge Replacement – Volt
      - Tailgate Hinge Replacement
      - Rear Side Door Upper Hinge and Lower Hinge Replacement
      - Bonnet Adjustment
      - Bonnet Replacement – Volt
      - Bonnet Insulator Replacement – Volt
      - Bonnet Primary and Secondary Latch Replacement – Volt
      - Front Side Door Check Link Replacement
      - Rear Side Door Check Link Replacement
      - Fuel Tank Filler Door Replacement
      - Fuel Tank Filler Pipe Housing Replacement
      - Bonnet Hold-Open Rod Replacement
      - Bonnet Front Weatherstrip Replacement – Volt
      - Bonnet Rear Weatherstrip Replacement – Volt
      - Front Compartment Front Sight Shield Replacement – Volt
      - Front Compartment Side Sight Shield Replacement – Volt
      - Liftgate Strut Replacement

- Front or Rear Side Door Lower Weatherstrip Replacement
- Front Side Door Weatherstrip Replacement - Door Side
- Front Side Door Weatherstrip Replacement - Body Side
- Liftgate Weatherstrip Replacement
- Rear Side Door Weatherstrip Replacement - Door Side
- Rear Side Door Weatherstrip Replacement - Body Side
- Description and Operation
  - Bonnet Ajar Indicator Description and Operation
- Bumpers and Fascias
  - Specifications
    - Fastener Tightening Specifications
  - Repair Instructions
    - Front Bumper Energy Absorber Replacement – Volt
    - Front Bumper Fascia Removal and Installation – Volt
    - Front Bumper Fascia Guide Replacement
    - Front Bumper Fascia Centre Support Replacement
    - Front Bumper Fascia Centre Support Bracket Replacement
    - Front Bumper Lower Fascia Replacement – Volt
    - Front Bumper Upper Fascia Replacement – Volt
    - Front End Panel Outer Deflector Replacement – Volt
    - Front End Panel Centre Deflector Replacement – Volt
    - Rear Bumper Fascia Removal and Installation – Volt
    - Rear Bumper Fascia Guide Replacement
    - Rear Bumper Fascia Inner Guide Replacement
    - Rear Bumper Fascia Outer Guide Replacement
    - Rear Bumper Upper Fascia Replacement – Volt
    - Rear Bumper Lower Fascia Replacement – Volt
    - Rear Bumper Energy Absorber Replacement – Volt
    - Rear Bumper Impact Bar Replacement
- Collision Repair
  - Specifications
    - Dimensions - Body
  - Visual Identification
    - Structure Identification
  - Repair Instructions
    - Front Bumper Impact Bar Replacement
    - Headlamp Mount Panel Replacement
    - Front End Upper Tie Bar Support Replacement
    - Front Wheelhouse Front Panel Replacement
    - Front Wheel housing Panel Replacement
    - Front Compartment Upper Side Rail Replacement
    - Front Hinge Pillar Body Sectioning
      Body Hinge Pillar Lower Reinforcement Replacement

- Roof Outer Panel Replacement
- Rocker Inner Panel Replacement
- Rocker Outer Panel Sectioning
- Body Side Outer Panel Reinforcement Replacement
- Body Side Inner Panel Sectioning
- Rear Compartment Floor Panel Sectioning
- Rear Wheelhouse Panel Replacement
- Quarter Outer Panel Sectioning
- Body Rear End Panel Replacement
- Front Wing Front Bracket Replacement
- Front Rail Replacement
- Centre Pillar Inner Panel Replacement
- Centre Pillar Reinforcement Replacement
- Centre Pillar Sectioning – Outer
- Front Side Door Outer Panel Replacement
- Rear Side Door Outer Panel Replacement
- Rail Replacement – Rear Section
- Rear End Lower Panel Reinforcement Replacement
- Rear End Panel Replacement
- Resistance Spot-Welded Full Panel Replacement
- MIG-Welded Full Panel Replacement

Description and Operation

- Dual Phase Steel
- High Strength Low Alloy Steel
- Metal Panel Bonding
- Mild Steel
- Ultra High Strength Dual Phase Steel
- Ultra High-Strength Steel

Frame and Underbody

Specifications

- Fastener Tightening Specifications

Repair Instructions

- Underbody Front Air Deflector Replacement – Left Side
- Underbody Front Air Deflector Replacement – Right Side
- Underbody Rear Air Deflector Replacement
- Drive train and Front Suspension Frame Replacement
- Drivetrain and Front Suspension Frame Front Insulator Replacement
- Front Wheelhouse Front Liner Replacement
- Front Wheelhouse Rear Liner Replacement
- Rear Wheel housing Panel Liner Replacement

Special Tools and Equipment

- Special Tools

5. Body Systems

- Fixed and Movable Windows
  - Specifications
    - Fastener Tightening Specifications
  - Schematic and Routing Diagrams
    - Moveable Window Schematics
    - Defogger Schematics
  - Diagnostic Information and Procedures
    - DTC B0283
    - DTC B316B, B317A, B318A, or B319A
    - DTC B3205
    - Symptoms - Fixed and Moveable Windows
    - Rear Window Defogger Malfunction
    - Power Windows Malfunction
    - Side Door Window Mechanical Diagnosis
  - Repair Instructions
    - Windscreen Replacement
    - Front Side Door Window Adjustment
    - Front Side Door Window Replacement
    - Rear Side Door Window Adjustment
    - Rear Side Door Window Replacement
    - Liftgate Upper Window Replacement
    - Liftgate Lower Window Replacement
    - Front Side Door Window Channel Replacement
    - Rear Side Door Window Rear Channel Replacement
    - Front Side Door Window Switch Replacement
    - Front Side Door Window and Multifunction Switch Replacement
    - Rear Side Door Window Switch Replacement
    - Front Side Door Window Regulator Replacement
    - Window Motor Programming - Express Function
    - Front Side Door Window Regulator Motor Replacement
    - Rear Side Door Window Regulator Replacement
    - Rear Side Door Window Regulator Motor Replacement
    - Rear Side Door Window Belt Reveal Moulding Replacement – Upper
    - Rear Side Door Window Belt Reveal Moulding Replacement – Lower
    - Front Side Door Window Belt Reveal Moulding Replacement – Upper
    - Front Side Door Window Belt Reveal Moulding Replacement – Lower
    - Front Side Door Window Outer Weatherstrip Replacement
    - Rear Side Door Window Outer Weatherstrip Replacement
    - Front Side Door Window Rear Channel Replacement
  - Description and Operation
    - Power Windows Description and Operation
    - Rear Window Defogger Description and Operation
      Stationary Window Description

- Special Tools and Equipment
  - Special Tools
- Horns
  - Specifications
    - Fastener Tightening Specifications
  - Schematic and Routing Diagrams
    - Horn Schematics
  - Diagnostic Information and Procedures
    - DTC B2750
    - Symptoms - Horns
    - Horns Malfunction
  - Repair Instructions
    - Horn Replacement
    - Steering Wheel Horn Contact Replacement
  - Description and Operation
    - Horns System Description and Operation
- Lighting
  - Specifications
    - Fastener Tightening Specifications
  - Schematic and Routing Diagrams
    - Headlights/Daytime Running Lights (DRL) Schematics
    - Exterior Lamps Schematics
    - Interior Lights Schematics
    - Interior Lights Dimming Schematics
  - Diagnostic Information and Procedures
    - DTC B1395
    - DTC B1480
    - DTC B2545
    - DTC B257A
    - DTC B2580
    - DTC B2585 or B3867
    - DTC B2600 or B2605
    - DTC B2610
    - DTC B2615
    - DTC B2625
    - DTC B2645
    - DTC B2699
    - DTC B3588
    - DTC B3600
    - DTC B3650
    - DTC B3806
    - DTC B3884
    - DTC B3948 or B3949

-
- DTC C0277 or C0890
- DTC C0297
- Symptoms - Lighting
- Automatic Light Malfunction
- Backup Lamps Malfunction
- Courtesy Lamps Malfunction
- Interior Lights Malfunction
- Hazard Lamps Malfunction
- Headlamps Malfunction
- Interior Backlighting Malfunction
- Lights On Indicator Malfunction
- Park, License, and/or Tail Lamps Malfunction
- Reading Lamps Malfunction
- Stop Lamps Malfunction
- Sunshade Illumination Malfunction
- Indicator Lamps and/or Indicators Malfunction

Repair Instructions

- Brake Pedal Position Sensor Calibration
- Brake Pedal Position Sensor Replacement
- Reading Lamp Replacement
- Dome and Reading Lamp Replacement
- Dome and Reading Lamp Bulb Replacement
- Sun Visor Illuminated Mirror Lamp Bulb Replacement
- Outside Rearview Mirror Direction Indicator Lamp Replacement
- Headlamp Replacement — Volt
- Headlamp Bulb Replacement
- Headlamp Aiming
- Front Direction Indicator Lamp Replacement — Volt
- Rear Fog Lamp Replacement — Volt Ampera (T79)
- Rear Fog Lamp Bulb Replacement — Volt Ampera (T79)
- Rear Reflector Replacement — Volt
- Front Direction Indicator Lamp Bulb Replacement — Volt
- High Mount Brake lamp Replacement
- Cargo Centre Courtesy Lamp Bulb Replacement
- Reverse Lamp Replacement
- Reverse Lamp Bulb Replacement
- Rear Number plate Lamp Replacement
- Rear Number Plate Light Bulb Replacement
- Tail Lamp Replacement
- Rear Compartment Courtesy Lamp Replacement

Description and Operation

- Exterior Lighting Systems Description and Operation

Interior Lighting Systems Description and Operation

- Special Tools and Equipment
  - Special Tools
- Mirrors
  - Specifications
    - Fastener Tightening Specifications
    - Adhesives, Fluids, Lubricants, and Sealers
  - Schematic and Routing Diagrams
    - Inside Rearview Mirror Schematics
    - Outside Rearview Mirror Schematics
  - Diagnostic Information and Procedures
    - Symptoms - Mirrors
    - Heated Mirrors Malfunction
    - Automatic Day-Night Mirrors Malfunction
    - Power Mirror Folding Malfunction
    - Power Mirror Malfunction
  - Repair Instructions
    - Outside Rearview Mirror Applique Replacement
    - Outside Rearview Mirror Replacement
    - Outside Rearview Mirror Housing Cover Replacement
    - Outside Rearview Mirror Housing Bezel Replacement
    - Outside Remote Control Rearview Mirror Switch Replacement
    - Outside Rearview Mirror Inner Actuator Replacement
    - Outside Rearview Mirror Glass Replacement
    - Inside Rearview Mirror Replacement
    - Inside Rearview Mirror Bracket Installation
  - Description and Operation
    - Automatic Day-Night Mirror Description and Operation
    - Outside Mirror Description and Operation
- Vehicle Access
  - Specifications
    - Fastener Tightening Specifications
  - Schematic and Routing Diagrams
    - Door Lock/Indicator Schematics
    - Release Systems Schematics – Release System Schematics
    - Release Systems Schematics – Liftgate Schematics
  - Diagnostic Information and Procedures
    - DTC B2500
    - DTC B3125, B3130, or B3135
    - DTC B3140 or B3150
    - DTC B3265
    - DTC B3618
    - DTC B3930
      DTC P0CC6

-
- DTC P0CC7, P0CC9, or P0CCA
- DTC P0CCC, P0CCE, or P0CCF
- DTC P0CD1
- DTC P0CD2
- DTC P04B6
- DTC P04B8-P04BA or P04DC
- DTC P04BB, P04BC, or P04C0
- DTC P04C3-P04C6
- DTC P04C8, P04CA, or P04CB
- DTC P169D
- Symptoms - Vehicle Access
- Charger Door Ajar Indicator Malfunction
- Charger Door Release Malfunction
- Exterior Door Handle Switch Malfunction – DTC B1474, B1534, B1535, or B3849
- Fuel Filler Door Ajar Indicator Malfunction
- Fuel Filler Door Release Malfunction
- Hatch Release Malfunction
- Door Ajar Indicator Malfunction
- Power Door Child Lock Malfunction
- Power Door Lock Key Cylinder Switches Malfunction
- Power Door Locks Malfunction
- Rear Hatch/Gate Ajar Indicator Malfunction

Repair Instructions

- Fuel Tank Filler Door Lock Actuator Replacement
- Front Side Door Inside Handle Cable Replacement
- Rear Side Door Inside Handle Cable Replacement
- Front Side Door Lock Cylinder Replacement
- Opening the Liftgate Without Electrical Power
- Front Side Door Outside Handle Replacement — Base
- Front Side Door Outside Handle Replacement — Pass Key Entry ATH
- Front Side Door Outside Handle Bracket Replacement
- Rear Side Door Outside Handle Bracket Replacement
- Liftgate Catch Replacement
- Rear Side Door Outside Handle Replacement
- Front Side Door Lock Cylinder Opening Cover Replacement
- Rear Side Door Lock Cylinder Opening Cover Replacement
- Front Side Door Lock Replacement
- Rear Side Door Lock Replacement
- Front Side Door Locking Rod Replacement
- Front Side Door Lock Cylinder Rod Replacement
- Front Side Door Outside Handle Rod Adjustment
- Front Side Door Outside Handle Rod Replacement

Rear Side Door Locking Rod Replacement

- Rear Side Door Outside Handle Rod Adjustment
- Rear Side Door Outside Handle Rod Replacement
- Front Side Door Lock Striker Adjustment
- Front Side Door Lock Striker Replacement
- Liftgate Catch Striker Replacement
- Rear Side Door Lock Striker Adjustment
- Rear Side Door Lock Striker Replacement
- Rear Compartment Lid and Fuel Filler Door Release Switch Replacement
- Opening the Fuel Tank Filler Door when the Door Lock Malfunctions
- Fuel Tank Filler Door Lock Release Switch Replacement
- Charger Door Release Switch Replacement
- Tailgate Release Switch Replacement

Description and Operation

- Charge Port Door Description and Operation
- Door Ajar Indicator Description and Operation
- Fuel Fill Door Description and Operation
- Liftgate Ajar Indicator Description and Operation
- Power Door Locks Description and Operation
- Rear Hatch/Gate Description and Operation

Wipers and Washers

Specifications

- Fastener Tightening Specifications

Schematic and Routing Diagrams

- Wiper/Washer Schematics

Diagnostic Information and Procedures

- DTC B371A
- DTC B3873
- Symptoms - Wiper/Washer Systems
- Windscreen Wiper System Malfunction
- Washer Malfunction
- Wiper Blade Element Check

Repair Instructions

- Windscreen Wiper and Washer Switch Replacement
- Windscreen Washer Nozzle Replacement
- Windscreen Washer Pump Hose Replacement
- Windscreen Washer Solvent Container Filler Tube Replacement
- Windscreen Washer Solvent Container Grommet Replacement
- Windscreen Washer Solvent Container Replacement
- Windscreen Washer Pump Replacement
- Windscreen Washer Solvent Level Sensor Replacement
- Plenum Upper Panel Insulator Replacement
- Plenum Drain Tube Replacement
- Air Inlet Grille Panel Replacement

- Air Inlet Grille Panel Extension Replacement
- Windscreen Wiper Arm Replacement – Driver
- Windscreen Wiper Arm Replacement – Passenger
- Windscreen Wiper Blade Replacement – Driver
- Windscreen Wiper Blade Replacement – Passenger
- Windscreen Wiper Motor Replacement
- Windshield Wiper Transmission Replacement
- Windshield Glass Cleaning
- Wiper Blade Element Cleaning
- Wiper Chatter Repair

Description and Operation

- Wiper/Washer System Description and Operation

6. Brakes

Antilock Brake System

Specifications

- Fastener Tightening Specifications

Schematic and Routing Diagrams

- Antilock Brake System Schematics

Diagnostic Information and Procedures

- DTC C0035-C0050, C1207-C1210, C1221-C1228, or C1232-C1235
- DTC C005A
- DTC C0110, C12E0, C12E8, or C12E9
- DTC C012A, C128B, C128E, or C12B2-C12B4
- DTC C012B or C12B6-C12B8
- DTC C012C, C121A, C128C, C128F, C12B9, C12BA, C12BB, or C12F7
- DTC C012D, C120A, C128A, C128D, C12BC, or C12BE
- DTC C012E or C12FE
- DTC C012F, C12A7, C12DC, or C12DD
- DTC C0161
- DTC C0186, C0196, or C0287
- DTC C0201, C120D, or C120E
- DTC C0242 or P0856
- DTC C0245, C122E
- DTC C0252
- DTC C0256, C12E6, or C12E7
- DTC C0294, C120C, or C12F8
- DTC C0299 or C12FF
- DTC C029C, C120C, C129A-C129F, C12B1, or C12F8
- DTC C0552
- DTC C0561
- DTC C056D, C121C-C121F, C123A-C1256, C126E-C127D, C12C2-C12DF, or C12F2-C12F6
- DTC C0574
- DTC C0710

- DTC C0870 or C12E4
- DTC C0880, C12E5, or C120F
- DTC C0898
- DTC C0914
- DTC C1120 or C1121
- DTC C1122 or C1123
- Symptoms - Antilock Brake System
- ABS Indicator Malfunction
- Traction Control/Stability Control Indicator Malfunction

- Repair Instructions
  - Antilock Brake System Automated Bleed
  - Steering Angle Sensor Centring
  - Electronic Brake Control Module Replacement
  - Electronic Brake Control Module with Brake Pressure Modulator Valve Replacement
  - Brake Control Brake Pedal Position Sensor Replacement
  - Electronic Brake Control Position Sensor Replacement
  - Brake Pressure Modulator Valve Pressure Sensor Calibration
  - Brake Pressure Modulator Valve Bracket Replacement
  - Front Wheel Speed Sensor Replacement
  - Rear Wheel Speed Sensor Replacement
  - Vehicle Yaw Sensor Learn
  - Vehicle Yaw Sensor with Vehicle Lateral and Longitudinal Accelerometer Replacement
- Description and Operation
  - ABS Description and Operation
- Special Tools and Equipment
  - Special Tools

- Disc Brakes
  - Specifications
    - Fastener Tightening Specifications
    - Disc Brake Component Specifications
    - Adhesives, Fluids, Lubricants, and Sealers
  - Diagnostic Information and Procedures
    - Brake Disc Thickness Measurement
    - Brake Disc Thickness Variation Measurement
    - Brake Disc Surface and Wear Inspection
    - Brake Disc Assembled Lateral Runout Measurement
    - Brake Pad Inspection
    - Brake Calliper Inspection
    - Front Disc Brake Mounting and Hardware Inspection
    - Rear Disc Brake Mounting and Hardware Inspection
  - Repair Instructions
    - Front Disc Brake Pads Replacement
      Rear Disc Brake Pads Replacement

- Front Brake Caliper Replacement
- Rear Brake Caliper Replacement
- Front Brake Caliper Overhaul
- Rear Brake Caliper Overhaul
- Front Brake Caliper Hardware Replacement
- Rear Brake Caliper Hardware Replacement
- Front Brake Caliper Bracket Replacement
- Rear Brake Caliper Bracket Replacement
- Front Brake Disc Replacement
- Rear Brake Rotor Replacement
- Front Brake Shield Replacement
- Rear Brake Shield Replacement
- Brake Disc Assembled Lateral Runout Correction
- Brake Rotor Assembled Lateral Runout Correction - Indexing
- Brake Rotor Assembled Lateral Runout Correction - Correction Plates
- Brake Rotor Assembled Lateral Runout Correction - On Vehicle Lathe
- Brake Disc Refinishing

Description and Operation

- Disc Brake System Description and Operation

Special Tools and Equipment

- Special Tools

Hydraulic Brakes

Specifications

- Fastener Tightening Specifications
- Brake Component Specifications
- Brake System Specifications
- Adhesives, Fluids, Lubricants, and Sealers

Schematic and Routing Diagrams

- Hydraulic Brake Schematics

Diagnostic Information and Procedures

- DTC C0267
- Symptoms - Hydraulic Brakes
- Brake Warning Indicator Malfunction
- Brake Pulsation
- Brake System Noise
- Braking Action Uneven - Pulls to One Side
- Braking Action Uneven - Front to Rear
- Brake Pedal Excessive Travel
- Brake Pedal Excessive Effort
- Brakes Drag
- Brake System Slow Release
- Brake Fluid Loss

Disc Brake System Diagnosis

- Brake Hydraulic and Assist System Diagnosis
- Brake System Vehicle Road Test
- Brake Pedal Travel Measurement and Inspection
- Brake System External Leak Inspection
- Brake System Internal Leak Test
- Hydraulic Brake Component Operation Visual Inspection
- Brake Pipe and Hose Inspection

Repair Instructions

- Master Cylinder Reservoir Filling
- Master Cylinder Reservoir Replacement
- Master Cylinder Replacement
- Master Cylinder Bench Bleeding
- Brake Fluid Level Indicator Switch Replacement
- Brake Pedal Assembly Replacement
- Brake Pipe Replacement
- Brake Master Cylinder Reservoir Hose Replacement
- Front Brake Hose Replacement
- Rear Brake Hose Replacement
- Hydraulic Brake System Bleeding – Pressure
- Hydraulic Brake System Flushing

Description and Operation

- Brake System, Hydraulic, Assist, and Control Description and Operation
- Brake Warning System Description and Operation
- Hydraulic Brake System Description and Operation

Special Tools and Equipment

- Special Tools

Park Brake

Specifications

- Fastener Tightening Specifications

Schematic and Routing Diagrams

- Park Brake System Schematics

Diagnostic Information and Procedures

- DTC C028A
- DTC C028B
- DTC C028D
- DTC C028F
- DTC C0293
- DTC C0298
- DTC C0558
- DTC C0561
- DTC C0574
- Symptoms - Park Brake

Park Brake Will Not Hold or Release

- Park Brake System Diagnosis
- Repair Instructions
  - Electronic Parking Brake Control Module Replacement
  - Parking Brake Switch Replacement
  - Handbrake Cable Replacement
  - Handbrake Rear Cable Replacement - Left Side
  - Handbrake Rear Cable Replacement - Right Side
  - Handbrake Cable Adjuster Disabling
  - Handbrake Cable Adjuster Enabling
- Description and Operation
  - Electronic Handbrake Control Module Description
  - Park Brake System Description and Operation

7. Diagnostic Overview, Starting Point, and Programming

- Programming and Setup
  - Repair Instructions
    - Accessory DC Power Control Module Programming and Setup
    - Air Conditioning Compressor Control Module Programming and Setup
    - Audio Amplifier Programming and Setup
    - Battery Charger Programming and Setup
    - Battery Energy Control Module Programming and Setup
    - Body Control Module Programming and Setup
    - Control Solenoid Valve and Transmission Control Module Assembly Programming and Setup — 4ET50
    - Coolant Heater Control Module Programming and Setup
    - Drive Motor Generator Power Inverter Module Programming and Setup
    - Electronic Brake Control Module Programming and Setup
    - Electronic Handbrake Control Module Programming and Setup
    - Engine Control Module Programming and Setup
    - Fuel Pump Flow Control Module Programming and Setup
    - Heated Seat Control Module Programming and Setup
    - Hybrid Battery Interface Control Module Programming and Setup
    - Hybrid Powertrain Control Module 2 Programming and Setup
    - HVAC System Control Module Programming and Setup
    - Inflatable Restraint Sensing and Diagnostic Module Programming and Setup
    - Instrument Cluster Programming and Setup
    - Keyless Entry Control Module Programming and Setup
    - Mobile Telephone Control Module Programming and Setup
    - Object Alarm Module Programming and Setup
    - Passenger Presence System Programming and Setup
    - Power Steering Control Module Programming and Setup
    - Radio Control Programming and Setup
    - Radio Programming and Setup
    - Remote Control Door Lock Receiver Programming and Setup
      Steering Column Lock Control Module Programming and Setup

- Theft Deterrent Module Programming and Setup
- Tyre Pressure Indicator Receiver Programming and Setup
- Special Tools and Equipment
  - Special Tools
- Vehicle Diagnostic Information
  - Specifications
    - Body Control Module Scan Tool Information
    - Driver Seat and Passenger Seat Heater Control Module Scan Tool Information
    - Electronic Brake Control Module Scan Tool Information
    - Electronic Parking Brake Control Module Scan Tool Information
    - Engine Control Module Scan Tool Information
    - Fuel Pump Flow Control Module Scan Tool Information
    - Hybrid Powertrain Control Module 2 Scan Tool Information
    - Inflatable Restraint Passenger Presence System Scan Tool Information
    - Inflatable Restraint Sensing and Diagnostic Module Scan Tool Information
    - Instrument Cluster Scan Tool Information
    - Keyless Entry Control Module Scan Tool Information
    - Mobile Telephone Control Module Scan Tool Information
    - Object Alarm Module Scan Tool Information
    - Power Steering Control Module Scan Tool Information
    - Radio Scan Tool Information
    - Steering Column Lock Control Module Scan Tool Information
    - Transmission Control Module Scan Tool Information
  - Diagnostic Information and Procedures
    - Strategy Based Diagnosis
    - Diagnostic Procedure Instructions
    - Diagnostic System Check Instructions
    - Diagnostic Starting Point - Vehicle
    - Diagnostic System Check - Vehicle
    - Powertrain Diagnostic Trouble Code (DTC) Type Definitions
    - Engine Cranks But Does Not Run
    - Inspection/Maintenance System Check
    - Diagnostic Repair Verification
- 8. Driveline/Axle
  - Wheel Drive Shafts
    - Specifications
      - Fastener Tightening Specifications
      - Adhesives, Fluids, Lubricants, and Sealers
    - Diagnostic Information and Procedures
      - Symptoms - Wheel Drive Shafts
      - Click Noise In Turns
      - Clunk When Accelerating from Freewheel
        Clunk Noise When Accelerating During Turns

- Repair Instructions
  - Front Wheel Drive Intermediate Shaft Replacement
  - Front Wheel Drive Shaft Replacement
  - Front Wheel Drive Shaft Inner Joint Boot Replacement
  - Front Wheel Drive Shaft Outer Joint Boot Replacement
- Description and Operation
  - Wheel Drive Shafts Description and Operation
- Special Tools and Equipment
  - Special Tools

9. Driver Information and Entertainment
- Mobile, Entertainment, and Navigation
  - Specifications
    - Fastener Tightening Specifications
  - Schematic and Routing Diagrams
    - Radio/Navigation System Schematics
    - Cellular Telephone Schematics
  - Diagnostic Information and Procedures
    - DTC B0000
    - DTC B1020
    - DTC B1025, B1035, B1045, or B1055
    - DTC B125A
    - DTC B1265
    - DTC B1271
    - DTC B1278 or B1279
    - DTC B1287
    - DTC B2462
    - DTC B2470
    - DTC B2485
    - Symptoms - Cellular Communication
    - Symptoms - Entertainment
    - Auxiliary Audio Input Malfunction
    - Mobile Telephone Conversation Partner Does Not Hear You
    - Mobile Telephone Conversation Partner Cannot Be Heard
    - Mobile Telephone Charging Malfunction
    - Mobile Telephone Microphone Malfunction
    - No Global Positioning System (GPS) Reception
    - Wireless Communication Interface Aerial Malfunction – UHP
    - Radio Controls Malfunction
    - Radio Information Display Malfunction – DTC U0257
    - Radio Poor Reception
    - Speaker Replacement Reference
    - Speaker Malfunction
  - Repair Instructions

- Mobile Telephone Microphone Replacement
- Communication Centre Call Switch Replacement
- Communication Interface Module Replacement
- Wireless Communication Interface Antenna Replacement
- Communication Interface Module Bracket Replacement
- Radio Replacement
- Radio Control Assembly Replacement
- Audio Disc Player, USB, Auxiliary In, and Memory Card Receptacle Replacement
- Radio Speaker Amplifier Replacement
- Navigation Signal Splitter Replacement
- Radio Antenna Base Replacement
- Radio Aerial Replacement
- Radio and Telephone Control Switch Replacement
- Radio Windscreen Side Garnish Moulding Speaker Replacement
- Radio Front Side Door Speaker Replacement
- Radio Rear Side Door Speaker Replacement
- Radio Rear Compartment Speaker Replacement

Description and Operation
- Cellular Telephone Description and Operation
- Radio/Audio System Description and Operation

Special Tools and Equipment
- Special Tools

Displays and Gauges

Specifications
- Ambient Air Temperature Sensor Resistance

Schematic and Routing Diagrams
- Instrument Cluster Schematics
- Driver Information System Schematics
- Audible Warnings Schematics

Diagnostic Information and Procedures
- DTC B0550
- Symptoms - Displays and Gauges
- Chime Malfunction
- Driver Information Centre Switch Malfunction - DTC B3567
- Engine Oil Pressure Indicator Malfunction – DTC P0520
- Fuel Gauge Malfunction - DTC P0461-P0464
- Instrument Cluster Gauges Malfunction
- Instrument Cluster Display Malfunction
- Speedometer and/or Odometer Malfunction

Repair Instructions
- Driver Information Display Replacement
- Driver Information Display and Multifunction Switch Replacement

Instrument Cluster Replacement

- Battery Charge Indicator Replacement
- Accessory Switch Replacement
- Description and Operation
  - Audible Warnings Description and Operation
  - Driver Information Centre (DIC) Description and Operation
  - Indicator/Warning Message Description and Operation
  - Instrument Cluster Description and Operation
- Secondary and Configurable Customer Controls
  - Schematic and Routing Diagrams
    - Steering Wheel Secondary/Configurable Control Schematics
  - Diagnostic Information and Procedures
    - Symptoms - Secondary and Configurable Customer Controls
    - Steering Wheel Controls Malfunction
  - Description and Operation
    - Steering Wheel Controls Description and Operation

10. Engine
- Cruise Control
  - Schematic and Routing Diagrams
    - Cruise Control Schematics
  - Diagnostic Information and Procedures
    - DTC B3794
    - DTC P0564
    - DTC P0571
    - DTC P0703
    - Symptoms - Cruise Control
    - Cruise Control Indicator Malfunction
    - Cruise Control Malfunction
  - Repair Instructions
    - Cruise Control Switch Replacement
  - Description and Operation
    - Cruise Control Description and Operation
- Engine Controls/Fuel – 1.4L (LUU)
  - Specifications
    - Temperature Versus Resistance
    - Altitude Versus Barometric Pressure
    - Ignition System Specifications
    - Fastener Tightening Specifications
    - Adhesives, Fluids, Lubricants, and Sealers
  - Schematic and Routing Diagrams
    - Engine Controls Schematics
  - Diagnostic Information and Procedures
    - DTC P0010 or P0013
      DTC P0011 or P0014

DTC P0016 or P0017

DTC P0030, P0036, P0053, P0054, P0135, or P0141

DTC P0101

DTC P0102 or P0103

DTC P0106

DTC P0107 or P0108

DTC P0111

DTC P0112, P0113, or P0114

DTC P0116

DTC P0117, P0118, or P0119

DTC P0121-P0123, P0222, P0223, or P2135

DTC P0128

DTC P0131, P0132, P0134, P0137, P0138, or P0140

DTC P0133, P013A, P013B, P013E, P013F, P1133, P2270, P2271, or P2A00

DTC P0171 or P0172

DTC P018B-P018D

DTC P0201, P0202, P0203, or P0204

DTC P0231, P0232, or P023F

DTC P025A

DTC P0300-P0304

DTC P0315

DTC P0324, P0326, or P06B6

DTC P0325, P0327, or P0328

DTC P0335 or P0336

DTC P0340 or P0365

DTC P0341 or P0366

DTC P0351-P0354

DTC P0420

DTC P043E, P043F, or P145F

DTC P0442 or P0455

DTC P0443, P0458, or P0459

DTC P0449, P0498, or P0499

DTC P0451-P0453

DTC P0497

DTC P0601-P0604, P0606, P062B, P062F, P0630, P16F3, or P2610 – ECM

DTC P0601-P0604, P0606, or P062F – Fuel Pump Control Module

DTC P0628 or P0629

DTC P0641 or P06A6 – Fuel Pump Control Module

DTC P0641, P0651, P0697, or P06A3 – ECM

DTC P0650

DTC P0685, P0689, P0690, or P1682

DTC P069E
DTC P0700

- DTC P0AC4
- DTC P1101
- DTC P121B or P121C
- DTC P1255 or P064A
- DTC P1400
- DTC P1458-P145A
- DTC P145C or P145D
- DTC P145E
- DTC P1461
- DTC P1516, P2101, P2119, or P2176
- DTC P15F9
- DTC P15FB
- DTC P162D
- DTC P1B12
- DTC P1E00
- DTC P2122, P2123, P2127, P2128, or P2138
- DTC P219A
- DTC P2400-P2402
- DTC P2418-P2420
- DTC P2422
- DTC P2450
- DTC P2534 – Fuel Pump Control Module
- DTC P2537
- DTC P2618 or P2619
- DTC P2635 – Fuel Pump Control Module
- Symptoms - Engine Controls
- Poor Fuel Fill Quality
- Malfunction Indicator Lamp (MIL) Diagnosis
- Engine Cranks But Does Not Run
- Fuel System Diagnosis
- Fuel Pump Electrical Circuit Diagnosis
- Fuel Injector Solenoid Coil Test
- Fuel Injector Balance Test
- Alcohol/Contaminants-in-Fuel Diagnosis
- Evaporative Emission Control System Diagnosis
- Electronic Ignition System Diagnosis
- Inspection/Maintenance System Check
- Inspection/Maintenance Complete System Set Procedure
- Inspection/Maintenance (I/M) Test DTC Table

Repair Instructions

- Engine Control Module Replacement
- Engine Control Module Bracket Replacement

Crankshaft Position System Variation Learn

- Throttle/Idle Learn
- Engine Coolant Temperature Sensor Replacement - Thermostat
- Engine Coolant Temperature Sensor Replacement – Water Outlet
- Mass Airflow Sensor with Inlet Air Temperature Sensor Replacement
- Manifold Absolute Pressure Sensor Replacement
- Heated Oxygen Sensor Replacement - Sensor 1
- Heated Oxygen Sensor Replacement - Sensor 2
- Accelerator Pedal Position Sensor Replacement
- Throttle Body Assembly Replacement
- Throttle Body Inspection and Cleaning
- Fuel Pressure Gauge Installation and Removal
- Fuel Tank Draining
- Fuel Tank Replacement
- Fuel Pressure Sensor Replacement - Fuel Feed Pipe
- Fuel Tank Filler Pipe Replacement
- Fuel Feed Pipe Replacement – Chassis
- Fuel Feed Pipe Replacement – Engine Compartment
- Fuel Tank Fuel Pump Module Replacement
- Fuel Pump Flow Control Module Replacement
- Fuel Tank Pressure Sensor Replacement
- Fuel Level Sensor Replacement
- Plastic Collar Quick Connect Fitting Service
- Fuel Injection Fuel Rail Assembly Replacement
- Fuel Injector Replacement
- Evaporative Emission Canister Vent Solenoid Valve Replacement
- Evaporative Emission Canister Replacement
- Evaporative Emission Canister Purge Solenoid Valve Replacement
- Evaporative Emission System Vacuum Leak Detection Pump Replacement
- Evaporative Emission System Cleaning
- Ignition Coil Replacement
- Spark Plug Inspection
- Spark Plug Replacement
- Camshaft Position Actuator Solenoid Valve Replacement – Exhaust
- Camshaft Position Actuator Solenoid Valve Replacement – Intake
- Crankshaft Position Sensor Replacement
- Camshaft Position Sensor Replacement – Exhaust
- Camshaft Position Sensor Replacement – Intake
- Knock Sensor Replacement
- Air Cleaner Outlet Duct Replacement
- Air Cleaner Resonator Outlet Duct Replacement
- Air Cleaner Element Replacement
- Air Cleaner Assembly Replacement

Description and Operation

- Camshaft Actuator System Description
- Electronic Ignition System Description
- Engine Control Module Description
- Engine Maintenance and Fuel Monitor Description
- Evaporative Emission Control System Description
- Fuel System Description
- Throttle Actuator Control (TAC) System Description

Special Tools and Equipment

- Special Tools — Diagnostic Tools

Engine Cooling

Specifications

- Temperature Versus Resistance
- Fastener Tightening Specifications
- Engine Cooling System Specifications
- Adhesives, Fluids, Lubricants, and Sealers

Schematic and Routing Diagrams

- Engine Cooling Schematics

Diagnostic Information and Procedures

- DTC P00B3 or P00B4
- DTC P00B6
- DTC P00B7
- DTC P0597-P0599
- DTC P1485-P1487
- DTC P2181
- Symptoms - Engine Cooling
- Engine Overheating
- Loss of Coolant
- Thermostat Diagnosis
- Engine Fails To Reach Normal Operating Temperature
- Pressure Cap Testing
- Cooling System Leak Testing

Repair Instructions

- Cooling System Draining and Filling
- Flushing
- Radiator Cleaning
- Coolant Recovery Reservoir Replacement
- Radiator Inlet Hose Replacement
- Radiator Outlet Front Hose Replacement
- Radiator Upper Bracket Replacement
- Cooling Fan and Shroud Replacement
- Engine Coolant Thermostat Replacement
- Engine Coolant Air Bleed Hose Connector Replacement

Water Outlet Replacement

- Water Inlet Replacement
- Water Pump Belt Replacement
- Water Pump Replacement
- Engine Coolant Temperature Sensor Replacement
- Radiator Replacement
- Radiator Air Lower Baffle and Deflector Replacement
- Radiator Air Side Baffle Replacement – Left Side
- Radiator Air Side Baffle Replacement – Right Side
- Radiator Air Seal Replacement

Special Tools and Equipment

- Special Tools

Engine Electrical

Schematic and Routing Diagrams

- Starting and Charging Schematics

Diagnostic Information and Procedures

- DTC B1325, B1330, B1517, C0800, C0899, C0900, C12E1, C12E2, P0562, P0563, P1A0C, P1A0D, or P1EFC
- DTC B1516
- DTC B151A
- DTC B1527
- Symptoms - Engine Electrical
- Battery Inspection/Test
- Battery Charging
- Battery Electrical Drain/Parasitic Load Test
- Charging System Test

Repair Instructions

- Battery Positive and Negative Cable Replacement
- Battery Positive Cable Replacement
- Battery Replacement

Description and Operation

- Battery Description and Operation
- Charging System Description and Operation
- Electrical Power Management Description and Operation
- Starting System Description and Operation

Special Tools and Equipment

- Special Tools

Engine Exhaust

Specifications

- Fastener Tightening Specifications

Diagnostic Information and Procedures

- Symptoms - Engine Exhaust
- Restricted Exhaust
- Exhaust Leakage
- Exhaust Noise

- Repair Instructions
  - Exhaust Manifold with Catalytic Converter Replacement
  - Exhaust System Replacement
  - Catalytic Converter Replacement
  - Catalytic Converter Brace Replacement
  - Exhaust Resonator Replacement
  - Exhaust Pipe Heat Shield Replacement – Front
  - Exhaust Pipe Heat Shield Replacement – Centre
  - Exhaust Pipe Heat Shield Replacement – Rear
  - Exhaust Rear Silencer Replacement
- Description and Operation
  - Exhaust System Description
- Special Tools and Equipment
  - Special Tools

Engine Mechanical – 1.4L (LUU)

- Specifications
  - Fastener Tightening Specifications
  - Engine Mechanical Specifications
  - Adhesives, Fluids, Lubricants, and Sealers
- Visual Identification
  - Disassembled Views
  - Engine Identification
- Diagnostic Information and Procedures
  - Symptoms - Engine Mechanical
  - Oil Consumption Diagnosis
  - Engine Noise Under Load
  - Engine Noise on Start-Up, but Only Lasting a Few Seconds
  - Base Engine Misfire without Internal Engine Noises
  - Base Engine Misfire with Abnormal Internal Lower Engine Noises
  - Base Engine Misfire with Abnormal Valve Train Noise
  - Base Engine Misfire with Coolant Consumption
  - Base Engine Misfire with Excessive Oil Consumption
  - Upper Engine Noise, Regardless of Engine Speed
  - Lower Engine Noise, Regardless of Engine Speed
  - Engine Will Not Crank - Crankshaft Will Not Rotate
  - Drive Belt Chirping, Squeal, and Whine Diagnosis
  - Drive Belt Rumbling and Vibration Diagnosis
  - Drive Belt Falls Off and Excessive Wear Diagnosis
- Repair Instructions
  - Engine Mount Replacement - Right Side
  - Engine Mount Inspection
  - Engine Mount Bracket Replacement - Right Side

Inlet Manifold Replacement

-
- Camshaft Timing Chain Replacement
- Timing Chain Tensioner Replacement
- Hydraulic Valve Lash Adjuster Arm Replacement
- Hydraulic Valve clearance Adjuster Replacement
- Camshaft Intake and Exhaust Sprocket Replacement
- Cylinder Head Replacement
- Oil Pan Replacement
- Automatic Transmission Flex Plate Replacement
- Crankshaft Balancer Replacement
- Crankshaft Front Oil Seal Replacement
- Crankshaft Rear Oil Seal Replacement
- Engine Front Cover with Oil Pump Replacement
- Engine Oil Pressure Indicator Switch Replacement
- Engine Replacement
- Engine Oil and Oil Filter Replacement
- Camshaft Cover Replacement
- Intake Camshaft Replacement
- Exhaust Camshaft Replacement
- Valve Stem Oil Seal and Valve Spring Replacement
- Engine Mount Bracket Removal
- Camshaft Timing Chain Inspection
- Camshaft Timing Chain Adjustment
- Draining Fluids and Oil Filter Removal
- Engine Lift Bracket Removal
- Exhaust Manifold Removal
- Engine Coolant Thermostat Housing Removal
- Water Outlet Removal
- Air Conditioning Compressor Bracket Removal
- Water Pump Pulley Removal
- Crankshaft Balancer Removal
- Water Pump Removal
- Throttle Body Removal
- Inlet Manifold Removal
- Ignition Coil Removal
- Camshaft Cover Removal
- Camshaft Position Actuator Solenoid Valve Removal
- Sump Removal
- Engine Front Cover and Oil Pump Removal
- Camshaft Timing Chain Removal
- Timing Chain Tensioner Removal
- Engine Front Cover Gasket Removal
- Camshaft Sprocket Removal
- Intake Camshaft Removal

- Exhaust Camshaft Removal
- Hydraulic Valve Lash Adjuster Arm Removal
- Hydraulic Valve clearance Adjuster Removal
- Cylinder Head Removal
- Piston, Connecting Rod, and Bearing Removal
- Crankshaft and Bearing Removal
- Cylinder Head Disassemble
- Cylinder Head Cleaning and Inspection
- Cylinder Head Assemble
- Engine Block Disassemble
- Engine Block Assemble
- Piston and Connecting Rod Disassemble
- Piston, Connecting Rod, and Bearing Cleaning and Inspection
- Piston and Connecting Rod Assemble
- Intake Manifold Disassemble
- Inlet Manifold Cleaning and Inspection
- Intake Manifold Assemble
- Crankshaft and Bearing Cleaning and Inspection
- Engine Front Cover and Oil Pump Cleaning and Inspection
- Engine Front Cover and Oil Pump Disassemble
- Sump Cleaning and Inspection
- Crankshaft and Bearing Installation
- Piston, Connecting Rod, and Bearing Installation
- Cylinder Head Installation
- Hydraulic Valve clearance Adjuster Installation
- Hydraulic Valve Lash Adjuster Arm Installation
- Intake Camshaft Installation
- Exhaust Camshaft Installation
- Camshaft Sprocket Installation
- Timing Chain Tensioner Installation
- Engine Front Cover Gasket Installation
- Camshaft Timing Chain Installation
- Engine Front Cover and Oil Pump Installation
- Sump Installation
- Camshaft Position Actuator Solenoid Valve Installation
- Camshaft Cover Installation
- Ignition Coil Installation
- Oil Filter Installation
- Inlet Manifold Installation
- Throttle Body Installation
- Water Pump Installation
- Crankshaft Balancer Installation

Water Pump Pulley Installation

-
- Air Conditioning Compressor Bracket Installation
- Water Pump Belt Installation
- Water Outlet Installation
- Engine Coolant Thermostat Housing Installation
- Exhaust Manifold Installation
- Engine Lift Bracket Installation
- Engine Mount Bracket Installation
- Engine Front Cover and Oil Pump Assemble
- Water Pump Belt Removal
- Automatic Transmission Flex Plate Removal
- Engine Block Cleaning and Inspection
- Automatic Transmission Flex Plate Installation

Description and Operation

- Engine Component Description
- Lubrication Description

Special Tools and Equipment

- Special Tools

11. HVAC

Heating, Ventilation, and Air Conditioning

Specifications

- Fastener Tightening Specifications
- Adhesives, Fluids, Lubricants, and Sealers
- Refrigerant System Specifications

Diagnostic Information and Procedures

- Handling of Refrigerant Lines and Fittings
- Leak Testing
- Air Conditioning (A/C) System Performance Test
- A/C Diagnostics Chart
- Heating Performance Diagnostic
- Defrosting Insufficient
- Noise Diagnosis - Blower Motor
- Air Conditioning Compressor Oil Diagnosis
- Noise Diagnosis - HVAC Module
- Odour Diagnosis

Repair Instructions

- Odour Correction
- Refrigerant Recovery and Recharging – High Voltage Electric Compressor
- Flushing
- Air Conditioning and Drive Motor Battery Cooling Compressor Replacement
- Air Conditioning Compressor and Condenser Hose Replacement
- Air Conditioning Compressor Front Hose Replacement
- Air Conditioning Compressor and Evaporator Hose Replacement

Air Conditioning Evaporator Thermal Expansion Valve Tube Replacement

- Air Conditioning Refrigerant Service Valve Core Replacement
- Air Conditioning Refrigerant Desiccant Replacement
- Air Conditioning Evaporator Thermal Expansion Valve Replacement — A/C Evaporator
- Air Conditioning Evaporator Thermal Expansion Valve Replacement — Drive Motor Battery Coolant Cooler
- Air Conditioning Refrigerant Pressure Sensor Replacement – Low Pressure
- Air Conditioning Refrigerant Pressure Sensor Replacement – High Pressure
- Air Conditioning Refrigerant Temperature Sensor Replacement
- Ambient Air Temperature Sensor Replacement
- Air Conditioning Condenser Replacement
- Air Conditioning and Heater Module Assembly Removal and Installation
- Air Conditioning Evaporator Replacement
- Air Conditioning Evaporator and Fan Module Drain Hose Replacement
- Heater Inlet Hose Replacement
- Heater Inlet And Outlet Pipe Replacement
- Heater Outlet Hose Replacement
- Heater Core Outlet Tube Replacement
- Heater Core Inlet Tube Replacement
- Heater Inlet Pipe Adapter Replacement
- Air Inlet Valve Actuator Gear Replacement
- Passenger Compartment Air Filter Replacement
- Air Inlet Replacement
- Air Inlet Assembly Replacement
- Blower Motor Control Module Replacement
- Air Inlet Valve and Inside Air Valve Control Cam Replacement
- Air Inlet Valve Lever Replacement
- Blower Motor Replacement
- Air Distributor Case Replacement
- Instrument Panel Outer Air Outlet Replacement - Left Side
- Instrument Panel Centre Air Outlet Replacement
- Instrument Panel Outer Air Outlet Replacement - Right Side
- Floor Front Air Outlet Duct Replacement – Right Side
- Floor Front Air Outlet Duct Replacement – Left Side
- Instrument Panel Centre Air Outlet Duct Replacement
- Windscreen Defroster Nozzle Replacement
- Side Window Defogger Outlet Duct Replacement – Left Side
- Side Window Defogger Outlet Duct Replacement – Right Side
- Heater and Air Conditioning Remote Control Replacement
- Mode Control Cam Actuator Replacement
- Mode Valve Lever Replacement
- Heater Coolant Heater Heat Shield Replacement
- Heater Core Replacement
- Heater Coolant Heater Air Supply Hose Replacement

Heater Coolant Heater Replacement

- Heater Water Auxiliary Pump Replacement
- Accessory DC Power Control Module Cooling Air Inlet Duct Replacement
- Accessory DC Power Control Module Cooling Air Duct Replacement
- Accessory DC Power Control Module Cooling Fan Replacement
- Heater Water Shutoff Valve Replacement
- Heater Water Shutoff Valve Actuator Inlet Hose Replacement
- Heater Water Shutoff Valve Inlet Hose Replacement
- Heater Water Auxiliary Pump Inlet Hose Replacement
- Heater Vent Hose Replacement
- Heater Outlet Hose Vapour Vent Hose Replacement

Description and Operation
- Heating and Air Conditioning System Description and Operation

Special Tools and Equipment
- Special Tools

HVAC - Automatic

Specifications
- Sensor Resistance Table

Schematic and Routing Diagrams
- HVAC Schematics

Diagnostic Information and Procedures
- HVAC Component Replacement Reference
- DTC B0163
- DTC B0173, B0178, or B3933
- DTC B018A, B048C, B048F, or B1395
- DTC B0183
- DTC B0193
- DTC B0223, B0233, B023A, or B0408
- DTC B0468, B046B, or B046C
- DTC B046A
- DTC P0071-P0073
- DTC P0531, P0532, or P0533
- DTC P0534
- DTC P0536-P0538 or P153B
- DTC P0D69-P0D7F
- DTC P151C or P2516-P2518
- DTC P1ECA or P1EC9
- DTC P1F0A-P1F0D
- DTC P2681, P26A3, P26A6, P26A7, or P26A9
- Symptoms - HVAC Systems - Automatic
- HVAC System Malfunction
- Actuator Recalibration

Repair Instructions
- Heater and Air Conditioning Remote Control Replacement

- Air Inlet Valve Actuator Replacement
- Mode Control Cam Actuator Replacement
- Temperature Valve Actuator Replacement
- Air Conditioning Refrigerant Temperature Sensor Replacement
- Duct Air Temperature Sensor Replacement – Upper
- Duct Air Temperature Sensor Replacement – Lower
- Ambient Air Temperature Sensor Replacement
- Inside Air Moisture and Windscreen Temperature Sensor Replacement
- Sun Load Temperature and Headlamp Automatic Control Ambient Light Sensor Replacement

Description and Operation

- Automatic HVAC Description and Operation

12. Hybrid/EV

Hybrid/EV Controls

Specifications

- Temperature Versus Resistance

Schematic and Routing Diagrams

- Hybrid Controls Schematics

Component Locator

- Hybrid Controls Electronic Component Views

Diagnostic Information and Procedures

- DTC P0335 or P0336
- DTC P0506 or P0507
- DTC P0601-P0604, P0606, P062F, P1EB6, or P1EB7 – Hybrid Powertrain Control Module
- DTC P061A or P061B
- DTC P06AF
- DTC P06B1, P06B2, P06B4, P06B5, P06E7, or P06E8
- DTC P0A1B or P0A1C
- DTC P0A2B-P0A2D or P0A31-P0A33
- DTC P0A2F
- DTC P0A35
- DTC P0A3F, P0A40, P0C52, P0C53, P0C5C, P0C5D, or P1B03
- DTC P0A45, P0A46, P0C57, P0C58, P0C61, P0C62, or P1B04
- DTC P0A78 or P0A79
- DTC P0A89
- DTC P0A8D-P0A8F
- DTC P0AB9
- DTC P0AEE, P0AEF, P0AF0, P0AF3-P0AF5, P0BD2-P0BD4, P0BD7-P0BD9, P0BDC-P0BDE, or P0BE1-P0BE3
- DTC P0B0D
- DTC P0BE6-P0BE8, P0BEA-P0BEC, P0BEE, P0BEF, P0BF0, P0BF2-P0BF4, P0BF6-P0BF8, or P0BFA-P0BFC
- DTC P0BFD or P0BFE
- DTC P0C01 or P0C04
- DTC P0C05 or P0C08
- DTC P0C0B or P0C0E

-
- DTC P0C17 or P0C18
- DTC P0C19
- DTC P0C1A
- DTC P0C20
- DTC P0C28
- DTC P0C4E
- DTC P0C4F
- DTC P150D or P150E
- DTC P15F0
- DTC P15F1
- DTC P15F2
- DTC P16E0
- DTC P16F2
- DTC P16F3
- DTC P16F4
- DTC P16F6
- DTC P179A
- DTC P181C-P181F, P183A-P183E, P184A, or P184B
- DTC P183F
- DTC P1A4F, P1A50-P1A54, P1ADC, or P1ADD
- DTC P1A71-P1A73
- DTC P1A90-P1A92
- DTC P1ABC or P1ABD
- DTC P1ADE, P1ADF, P1AE0, or P1AE1
- DTC P1AE8, P1AE9, P1AEA, or P1AEB
- DTC P1AEC-P1AEF
- DTC P1AF0 or P1AF2
- DTC P1AF4-P1AF7
- DTC P1B0B or P1B0C
- DTC P1B0D or P1B0E
- DTC P1B0F or P1B10
- DTC P1B15
- DTC P1B41 or P1B42
- DTC P1B43 or P1B44
- DTC P1BFF or P1E23-P1E25
- DTC P1E0A or P1E0B
- DTC P1E0E
- DTC P1E15-P1E18
- DTC P1E19 or P1E1A
- DTC P1E1B-P1E1F
- DTC P1E20-P1E22
- DTC P1E27 or P1E28
- DTC P1E29

- DTC P1E2A-P1E2F or P1E30-P1E32
- DTC P1E33
- DTC P1E34-P1E36
- DTC P1E37
- DTC P1E38
- DTC P1E39
- DTC P1E3A
- DTC P1E3E or P1E3F
- DTC P1E40-P1E42
- DTC P1E43 or P1E44
- DTC P1E45
- DTC P1E46-P1E49
- DTC P1E4A or P1E4B
- DTC P1EA9
- DTC P1EB8
- DTC P2797
- Symptoms – Hybrid Controls
- DC Power Conversion Test

Repair Instructions

- Drive Motor Generator Power Inverter Module Cover Replacement
- Drive Motor Generator Power Inverter Module Replacement
- Accessory DC Power Control Module Replacement

Description and Operation

- Accessory DC Power Control Module Description and Operation
- Drive Motor Generator Power Inverter Module Description and Operation
- Electromagnetic Compatibility Description
- High Voltage Monitoring Systems Description
- Hybrid Modes of Operation Description

Special Tools and Equipment

- Special Tools

Hybrid/EV Cooling

Specifications

- Temperature Versus Resistance
- Hybrid Cooling System Specifications

Schematic and Routing Diagrams

- Hybrid Cooling Schematics

Diagnostic Information and Procedures

- DTC P0480 or P0483
- DTC P0A7E
- DTC P0A9C-P0A9E, P0AC6-P0ACD, P0AE9-P0AEB, P0BC3-P0BC5, P0C34-P0C36, P0C7D-P0C9A, or P0CA9-P0CBA
- DTC P0C32
- DTC P0C43-P0C45

Hybrid/EV Battery Pack Coolant Pump Malfunction – DTC P0C47, P0C4A, or P1F18

- DTC P0CD6-P0CD8
- DTC P0CE0, P0CE2, P0CE3, P1EC7, or P1EC8
- DTC P0CE6 or P0CE7
- Hybrid/EV Electronics Coolant Pump Malfunction – DTC P0CE9 or P0CED
- DTC P0CEF-P0CF1
- Cooling Fan Malfunction – DTC P148A-P148C
- 14 Volt Power Module Cooling Fan Malfunction – DTC P1EA6 or P1EA7
- Hybrid/EV Battery Pack Coolant Heater Malfunction – DTC P1EC6
- Hybrid Cooling System Pressure Cap Testing
- Hybrid Cooling System Leak Test
- Hybrid Battery Pack Coolant Passage Leak Test

Repair Instructions

- Drive Motor Battery Cooling System Draining and Filling
- Drive Motor Generator Power Inverter Module Cooling System Draining and Filling
- Coolant Temperature Sensor Replacement
- Generator Control Module Coolant Tank Hose Replacement
- Drive Motor Generator Control Module Coolant Pump Hose Replacement
- Drive Motor Generator Control Module Cooling Outlet Hose Replacement
- Drive Motor Generator Control Module Radiator Outlet Hose Replacement
- Generator Control Module Coolant Radiator Hose Replacement
- Generator Control Module Coolant Pump Replacement
- Radiator Grille Screen Replacement
- Drive Motor Power Inverter Module Cooling Inlet Hose Replacement
- Drive Motor Battery Coolant Cooler Replacement
- Drive Motor Battery Coolant Radiator Replacement
- Drive Motor Battery Coolant Filter Replacement
- Drive Motor Battery Coolant Pump Replacement
- Drive Motor Battery Coolant Pump Inlet Hose Replacement
- Drive Motor Battery Radiator Surge Tank Replacement
- Drive Motor Battery Coolant/Air Separator Replacement
- Drive Motor Battery Coolant Cooler Outlet Hose Replacement
- Drive Motor Battery Coolant Flow Control Valve Replacement
- Drive Motor Battery Coolant Inlet Hose Replacement
- Drive Motor Battery Coolant Outlet Hose Replacement
- Drive Motor Battery Radiator Inlet Hose Replacement
- Drive Motor Battery Radiator Outlet Hose Replacement
- Drive Motor Battery Coolant Cooler Inlet Hose Replacement
- Drive Motor Battery Coolant Cooler Inlet Hose Assembly Replacement
- Hybrid/EV Battery Pack Coolant Control Solenoid Valve Learn

Description and Operation

- Drive Motor Battery Cooling Description
- Drive Motor Generator Control Module Cooling System Description and Operation
- Hybrid Cooling System Description and Operation

- Special Tools and Equipment
  - Special Tools
- Hybrid/EV Energy Storage
  - Schematic and Routing Diagrams
    - Hybrid Energy Storage Schematics
  - Diagnostic Information and Procedures
    - High Voltage Safety
    - High Voltage Disabling
    - High Voltage Enabling
    - DTC P0601-P0604 or P0606 – Hybrid Powertrain Control Module 2
    - DTC P0641-P0643 or P0651-P0653
    - DTC P0A0C or P0A0D
    - DTC P0A80
    - DTC P0AA1, P0AD9, P0ADD, P0AE2, P0AE4, P0D0A, P0D11, P1EBC-P1EBF, P1EC0, or P1EC3-P1EC5
    - DTC P0AA6, P1AE6, or P1F0E
    - DTC P0ABB, P0ABC, or P0ABD
    - DTC P0AC1, P0AC2, P0B10, P0B11, P0B13, P1EBA, or P1EBB
    - DTC P0AF8
    - DTC P0AFA or P0AFB
    - DTC P0B3B-P0BBB, P1B16-P1B2D, P1B45-P1BFE, P1E01-P1E06, or P1E4C-P1E8A
    - DTC P0BBE
    - DTC P0C77 or P0C78
    - DTC P0D17 or P0D18
    - DTC P0D5E
    - DTC P1A07, P1E93, P1E99, P1E9F, or P1EA5
    - DTC P1E3D
    - DTC P1E92, P1E98, P1E9E, or P1EA4
    - DTC P1EAB or P1EAC
    - DTC P1F17
    - Loss of Isolation on the High Voltage Main Bus
    - Hybrid\EV Battery Voltage Present
  - Repair Instructions
    - High Voltage System Inspection
    - Battery Charger and 14 V Power Module Maxi 20 A Fuse Replacement
    - 300-Volt Battery Positive and Negative Cable Replacement – Drive Motor Battery-to-Inverter
    - 300-Volt Battery Positive and Negative Cable Replacement – Inverter-to-Compressor/Heater Module
    - 300-Volt Battery Positive and Negative Cable Replacement – Drive Motor Battery-to-Charger
    - 300-Volt Battery Positive and Negative Cable Replacement – Drive Motor Battery-to-APM Module
    - Drive Motor Battery Replacement and Shipping Preparation
    - Clear Secured High Voltage DTCs
    - Hybrid/EV Battery Pack Data Reset
    - Hybrid/EV Battery Pack Capacity Learn
  - Description and Operation

- Drive Motor Battery System Description
- Special Tools and Equipment
  - Special Tools
- Plug-In Charging
  - Specifications
    - Fastener Tightening Specifications
  - Schematic and Routing Diagrams
    - Plug-In Charging Schematics
  - Diagnostic Information and Procedures
    - DTC P0CF4-P0CF6
    - DTC P0CF9 or P0D01
    - DTC P0D1F
    - DTC P0D20, P0D22, P1EFA, or P1EFB
    - DTC P0D21, P0D23, P1EF0, or P1EF1
    - DTC P0D26
    - DTC P0D2A
    - DTC P0D2B or P0D2C
    - DTC P0D39-P0D3B, P0D49, P0D4E-P0D54, P1ECB-P1ECD, P1ED0-P1ED9, P1EDB, P1EDC, P1EDE-P1EED, or P1EFE-P1F02
    - DTC P0D3E or P0D3F
    - DTC P0D40, P1EDA, P1EDD, or P1F03-P1F05
    - DTC P0D43-P0D45
    - DTC P0D58 or P0D59
    - DTC P0D5B, P0D5C, P1ECE, or P1EFD
    - DTC P0D5E
    - DTC P1EE6
    - DTC P1EEF or P1EFE
    - DTC P1EF3-P1EF5
  - Repair Instructions
    - Charge Port Housing Bezel Replacement
    - Charge Port Door Replacement
    - Charge Port Housing Replacement
    - Charge Port Door Actuator Replacement
    - Charge Port Door Hinge Bezel Replacement
    - Charge Port Door Actuator Cable Replacement
    - Charge Port Door Actuator Seal Replacement
    - Charge Port Door Hinge Seal Replacement
    - Charge Port Door Ajar Indicator Switch Replacement
    - Drive Motor Battery Charger Replacement
    - Drive Motor Battery Charger Receptacle Replacement
  - Description and Operation
    - Plug-In Charging System Description and Operation
  - Special Tools and Equipment
    - Special Tools

- 13. Power and Signal Distribution
  - Data Communications
    - Schematic and Routing Diagrams
      - Data Communication Schematics
      - Body Control System Schematics
    - Diagnostic Information and Procedures
      - Control Module U Code List
      - DTC B1000
      - DTC B1001
      - DTC B1016
      - DTC B101D
      - DTC B101E
      - DTC C0550
      - DTC C056D
      - DTC C056E
      - DTC C078A
      - DTC P0601-P0604, P0606, or P062F
      - DTC P06E4
      - DTC P0A1F, P1A05, or P1A06
      - DTC P16B7
      - DTC P16B8-P16BA
      - DTC P16C1-P16C5
      - DTC P16C6
      - DTC P1E8E-P1E91
      - DTC P1E94-P1E97
      - DTC P1E9A-P1E9D
      - DTC P1EA0-P1EA3
      - DTC P1EB1
      - DTC P1EB2-P1EB5
      - DTC P1EB9
      - DTC P1EC1 or P1EC2
      - DTC P1EF8
      - DTC P1F06-P1F09
      - DTC P262B
      - DTC U0001
      - DTC U0002
      - DTC U0020
      - DTC U0073 or U2100
      - DTC U0074
      - DTC U0077
      - DTC U007A
      - DTC U0078
      - DTC U0100-U02FF

- DTC U0300-U0336
- DTC U0400-U05FF
- DTC U1500-U15BF
- DTC U1793
- DTC U1795
- DTC U179A
- DTC U1803
- DTC U1806
- DTC U1807
- DTC U180A
- DTC U180B
- DTC U180C
- DTC U180D
- DTC U1814
- DTC U1817
- DTC U1818
- DTC U1821
- DTC U182D
- DTC U182E or U182F
- DTC U1833
- DTC U1838
- DTC U1839
- DTC U183B
- DTC U183C
- DTC U183E
- DTC U1845 or U1846
- DTC U1849
- DTC U184A
- DTC U184B
- DTC U184C
- DTC U184D
- DTC U184E
- DTC U1850
- DTC U1858
- DTC U185A
- DTC U185B
- DTC U185C
- DTC U1860
- DTC U1861
- DTC U186A
- DTC U186B
- DTC U1876
- DTC U1879

- DTC U1885
- DTC U18B9-U18BF
- DTC U2099
- DTC U2101
- DTC U2103
- DTC U2105-U2199
- DTC U2401
- DTC U2602
- DTC U2603
- DTC U2604
- DTC U2605
- DTC U2606
- DTC U2608
- DTC U2609
- DTC U2611
- DTC U2612
- Symptoms - Data Communications
- Scan Tool Does Not Power Up
- Scan Tool Does Not Communicate with Chassis High Speed GMLAN Device
- Scan Tool Does Not Communicate with High Speed GMLAN Device
- Scan Tool Does Not Communicate with Low Speed GMLAN Device
- Data Link References

Repair Instructions

- Body Control Module Replacement
- Hybrid Powertrain Control Module 2 Replacement

Description and Operation

- Body Control System Description and Operation
- Data Link Communications Description and Operation

Power Outlets

Schematic and Routing Diagrams

- Cigar Lighter/Power Outlet Schematics

Diagnostic Information and Procedures

- Symptoms - Power Outlets
- Power Outlet Receptacle Malfunction – DTC B1445

Repair Instructions

- Accessory Power Receptacle Replacement

Description and Operation

- Power Outlets Description and Operation

Special Tools and Equipment

- Special Tools

Wiring Systems and Power Management

Specifications

Fastener Tightening Specifications

- Schematic and Routing Diagrams
  - Harness Routing Views
  - Electrical Schematic Symbols
  - Vehicle Zoning Strategy — Passenger Car
  - Power Distribution Schematics
  - Power Moding Schematics
  - Ground Distribution Schematics
- Component Locator
  - Master Electrical Component List
  - Front of Vehicle/Engine Compartment Component Views
  - Powertrain Component Views
  - Instrument Panel/Centre Console Component Views
  - Passenger Compartment/Roof Component Views
  - Door Component Views
  - Luggage Compartment/Rear of Vehicle Component Views
  - Wheels/Vehicle Underbody Component Views
  - Ground Views
- Visual Identification
  - Electrical Centre Identification Views
  - Component Connector End Views
  - Splice Pack Connector End Views
  - Inline Harness Connector End Views
- Diagnostic Information and Procedures
  - DTC B144B
  - DTC B1451
  - DTC C0847, C0848, C1240, or C1241
  - DTC C0857 or C1242
  - DTC P15B9, P15BA, P1A5E, P1A5F, P1EF6, P1EF7, P2534, or P2535
  - DTC P1A60
  - Symptoms - Wiring Systems
  - Power Mode Mismatch
  - Retained Accessory Power Malfunction
  - Vehicle ON/OFF Switch Indicator Malfunction – DTC B097C
  - Vehicle Will Not Change Power Mode – DTC B097B
  - General Electrical Diagnosis
  - Checking Aftermarket Accessories
  - Circuit Testing
  - Using Connector Test Adapters
  - Probing Electrical Connectors
  - Fault-finding with a Digital Multimeter
  - Fault-finding with a Test Lamp
  - Using Fused Jumper Wires
    Measuring Voltage

-
- Measuring Voltage Drop
- Measuring Frequency
- Testing Ground and Low Reference Circuits
- Testing for Continuity
- Testing for Short to Ground
- Testing for a Short to Voltage
- Testing for Intermittent Conditions and Poor Connections
- Inducing Intermittent Fault Conditions
- Testing for Electrical Intermittents
- Scan Tool Snapshot Procedure
- Circuit Protection - Fuses
- Circuit Protection - Circuit Breakers
- Circuit Protection - Fusible Links
- Wiring Repairs
- Repairing Damaged Wire Insulation
- Flat Wire Repairs
- Folded-Over Wire Repair
- GMLAN Wiring Repairs
- High Temperature Wiring Repairs
- Heated Oxygen Sensor Wiring Repairs
- Splicing Copper Wire Using Splice Sleeves
- Splicing Twisted or Shielded Cable
- Splicing Inline Harness Diodes
- SIR/SRS Wiring Repairs
- Connector Repairs
- Connector Position Assurance Locks
- Terminal Position Assurance Locks
- AFL/EPC Connectors
- Bosch Connectors - BSK
- Bosch Connectors - 0.64
- Bosch Connectors - 2.8 JPT
- Bosch Connectors - ECM
- Delphi Connectors - Weather Pack
- Delphi Connectors - Push To Seat
- Delphi Connectors - Pull To Seat
- Delphi Connectors - Micro-Pack 100W
- Delphi Connectors - Micro .64
- Delphi Connectors - 12-Way
- Delphi Connectors — Steering Gear
- FCI Connectors — Lever Lock
- FCI Connectors — SIR
- FEP Connectors — Steering Gear

JST Connectors

- Kostal Connectors - Glow Plug Control Module
- Kostal Connectors - Transmission
- Molex Connectors
- Sumitomo Connectors
- Tyco/AMP Connectors - CM 42-Way
- Tyco/AMP Connectors - Sensor
- Tyco/AMP Connectors - 0.25 Cap
- Tyco/AMP Connectors - 43-Way
- Tyco/AMP Connectors - Door Module
- Tyco/AMP Connectors - 102-Way Inline
- Tyco/AMP Connectors - Seat
- Tyco/AMP Connectors - SIR
- Yazaki Connectors - 2-Way
- Yazaki Connectors - 16-Way
- Repairing Connector Terminals — Terminated Lead Repair
- Terminal Removal

Repair Instructions
- Relay Replacement - Attached to Wire Harness
- Relay Replacement - Within an Electrical Centre
- Fuse Block Replacement
- Accessory Wiring Junction Block Replacement
- Ignition and Start Switch Replacement

Description and Operation
- Power Mode Description and Operation
- Retained Accessory Power Description and Operation

Special Tools and Equipment
- Special Tools

15. Safety and Security

Immobilizer

Specifications
- Fastener Tightening Specifications

Schematic and Routing Diagrams
- Immobilizer Schematics

Diagnostic Information and Procedures
- DTC B2955
- DTC B3031
- DTC B3055
- DTC B3060
- DTC B389A
- DTC B3902
- DTC B3935
- DTC B3976

DTC B3984

- DTC P0513
- DTC P0633
- DTC P1631
- Repair Instructions
  - Theft Deterrent Module Replacement
  - Immobilizer System Component Programming
  - Key with Integrated Transmitter Programming
- Description and Operation
  - Immobilizer Description and Operation

Object Detection

- Schematic and Routing Diagrams
  - Object Detection Schematics
- Diagnostic Information and Procedures
  - DTC B0954, B0955, B0956, or B0957
  - DTC B0958, B0959, B0960, or B0961
  - DTC B0967 or B0968
  - DTC B1015
  - DTC B1405
  - Symptoms - Object Detection
  - Parking Assist System Malfunction
  - Rear Vision Camera System Malfunction
- Repair Instructions
  - Front and Rear Object Alarm Module Replacement
  - Front Parking Assist Alarm Sensor Replacement
  - Rear Parking Assist Alarm Sensor Replacement
  - Rearview Camera Image Display Module Replacement — Volt
- Description and Operation
  - Object Detection Description and Operation — UD5
  - Object Detection Description and Operation — UVC

Remote Functions

- Schematic and Routing Diagrams
  - Remote Function Schematics
- Diagnostic Information and Procedures
  - DTC B097B
  - DTC B3101
  - DTC B3105
  - DTC B3106
  - DTC B3109-B3113
  - DTC B310D-B310F
  - DTC B3119
  - DTC B3120
  - DTC B3121
  - DTC B3122

- DTC B3123
- DTC B3124
- Symptoms - Remote Functions
- No Remote Detected
- Keyless Entry System Malfunction — Active
- Keyless Entry System Malfunction — Passive
- Remote Vehicle Start Malfunction

Repair Instructions

- Ignition Lock Key Transmitter Antenna Replacement – Instrument Panel
- Ignition Lock Key Transmitter Antenna Replacement – Floor Console — Front
- Ignition Lock Key Transmitter Antenna Replacement – Floor Console — Rear
- Keyless Entry Control Module Replacement
- Remote Control Door Lock Receiver Replacement
- Garage Door Opener Transmitter Replacement
- Garage Door Opener Transmitter Pushbutton Replacement

Description and Operation

- Keyless Entry System Description and Operation

Seat Belts

Schematic and Routing Diagrams

- Seat Belt Schematics

Diagnostic Information and Procedures

- Symptoms - Seat Belts
- Seat Belt Indicator Circuit Malfunction - Driver
- Seat Belt Indicator Circuit Malfunction - Passenger
- Seat Belt Indicator Circuit Malfunction - Rear

Repair Instructions

- Front Seat Belt Buckle Replacement
- Shoulder Belt Replacement - Rear
- Rear Seat Shoulder Belt Buckle Replacement

Description and Operation

- Seat Belt System Description and Operation

Supplemental Inflatable Restraints

Schematic and Routing Diagrams

- SIR Schematics

Component Locator

- SIR Identification Views

Diagnostic Information and Procedures

- DTC B0012 or B0013
- DTC B0014, B0021, B0031, or B0038
- DTC B0015, B001A, B001B, or B0022
- DTC B0016, B0018, B0023, or B0025
- DTC B0017 or B0024
- DTC B0019 or B0020

- DTC B0052
- DTC B0083 or B0084
- DTC B0085 or B0088
- DTC B0086 or B0087
- DTC B0098
- DTC B067F or B0680
- DTC B1001
- DTC B1019
- Symptoms - SIR
- Air Bag Indicator Circuit Malfunction – Passenger
- Air Bag Indicator Circuit Malfunction – Driver
- SIR Disabling and Enabling

Introduction
- SIR Service Precautions

Repair Instructions
- Front End Inflatable Restraint Discriminating Sensor Replacement
- Inflatable Restraint Side Impact Sensor Replacement
- Inflatable Restraint Sensing and Diagnostic Module Replacement
- Steering Wheel Inflatable Restraint Module Replacement
- Steering Wheel Airbag Coil Replacement
- Inflatable Restraint Steering Wheel Module Coil Centring
- Instrument Panel Inflatable Restraint Module Replacement
- Inflatable Restraint Instrument Panel Lower Module Replacement – Driver Side
- Inflatable Restraint Instrument Panel Lower Module Replacement – Passenger Side
- Driver or Passenger Seat Side Inflatable Restraint Module Replacement
- Inflatable Restraint Rear Side Door Side Impact Sensor Replacement
- Inflatable Restraint Instrument Panel Module Indicator Replacement
- Roof Side Rail Inflatable Restraint Module Replacement
- Front Seat Belt Anchor Plate Tensioner Replacement
- Driver or Passenger Seat Retractor Side Belt Replacement
- Inflatable Restraint Module Handling and Scrapping
- Pretensioner Handling and Scrapping

Description and Operation
- SIR System Description and Operation

Special Tools and Equipment
- Special Tools

Theft Deterrent

Schematic and Routing Diagrams
- Theft Deterrent System Schematics

Diagnostic Information and Procedures
- Symptoms - Theft Deterrent
- Content Theft Deterrent Malfunction

Inclination/Intrusion Sensor Malfunction

- Theft Deterrent Alarm Malfunction
- Description and Operation
  - Theft Systems Description and Operation
- 16. Seats
  - Seat Hardware, Trim, and Upholstery
    - Repair Instructions
      - Driver or Passenger Seat Replacement
      - Driver or Passenger Seat Cushion Outer Finish Panel Replacement
      - Driver or Passenger Seat Wiring Harness Replacement – Seat Back
      - Driver or Passenger Seat Wiring Harness Replacement – Cushion
      - Driver or Passenger Seat Adjuster Vertical Actuator Handle Replacement
      - Driver or Passenger Seat Adjuster Handle Replacement
      - Front Seat Adjuster Track Finish Cover Replacement
      - Driver or Passenger Seat Head Restraint Replacement
      - Front Seat Head Restraint Adjust Rod Guide Replacement
      - Front Seat Head Restraint Adjust Knob Replacement
      - Driver or Passenger Seat Cushion Closeout Cover Replacement
      - Driver or Passenger Seat Outer Recliner Finish Cover Replacement
      - Driver or Passenger Seat Inner Recliner Finish Cover Replacement
      - Driver or Passenger Seat Cushion Frame Replacement
      - Front Seat Cushion Cover and Pad Replacement
      - Driver or Passenger Seat Cushion Pad Wire Replacement
      - Driver or Passenger Seat Backrest Cushion Cover and Pad Replacement
      - Driver or Passenger Seat Back Cushion Pad Wire Replacement
      - Driver or Passenger Seat Back Cushion Frame Replacement
      - Driver or Passenger Seat Recliner Handle Replacement
      - Driver or Passenger Seat Back Cushion Finish Panel Replacement
      - Rear Seat Latch Striker Bezel Replacement
      - Rear Seat Head Restraint Replacement
      - Rear Seat Head Restraint Guide Replacement
      - Rear Seat Back Cushion Pivot Support Replacement
      - Rear Seat Cushion Cover and Pad Replacement
      - Rear Seat Cushion Replacement
      - Rear Seat Latch Replacement
      - Rear Seat Back Cushion Replacement
      - Rear Seat Back Cushion Panel Replacement
      - Rear Seat Back Cushion Cover and Pad Replacement
      - Rear Seat Back Cushion Hinge Replacement
      - Rear Seat Back Cushion Latch Release Handle Bezel Replacement
      - Rear Seat Anchor Plate Bezel Replacement
  - Seat Heating and Cooling
    - Schematic and Routing Diagrams
      - Heated/Cooled Seat Schematics

- Diagnostic Information and Procedures
  - DTC B1925 or B2170
  - DTC B2345
  - DTC B2425 or B2430
  - DTC B242A
  - Symptoms - Seat Heating and Cooling
  - Front Heated Seat Malfunction
- Repair Instructions
  - Front Seat Heater Control Module Replacement
  - Driver or Passenger Seat Backrest Cushion Heater Replacement
  - Driver Seat Cushion Heater Replacement
  - Passenger Seat Cushion Heater Replacement
- Description and Operation
  - Heated Seats Description and Operation

17. Steering
- Power Steering
  - Specifications
    - Fastener Tightening Specifications
  - Schematic and Routing Diagrams
    - Power Steering Schematics
  - Diagnostic Information and Procedures
    - DTC C0176
    - DTC C044A
    - DTC C0456
    - DTC C0475
    - DTC C047A
    - DTC C0545
    - DTC C0565
    - DTC C0569
    - DTC C0710
    - Rattle, Clunk, or Shudder Noise from the Power Steering System
  - Repair Instructions
    - Steering Linkage Outer Track rod Replacement
    - Steering Gear Boot Replacement
    - Steering Gear Replacement
    - Steering Linkage Inner Track Rod Replacement
    - Steering Gear Drive Coupling Replacement
    - Power Steering Assist Motor Replacement
    - Power Steering Control Module Calibration
  - Description and Operation
    - Power Steering System Description and Operation – Electronic Power Steering
  - Special Tools and Equipment
    - Special Tools

- Steering Wheel and Column
  - Specifications
    - Fastener Tightening Specifications
    - Adhesives, Fluids, Lubricants, and Sealers
  - Schematic and Routing Diagrams
    - Column Lock Schematics
  - Diagnostic Information and Procedures
    - DTC B1023
    - DTC B144C
    - DTC B2515
    - DTC B2897
    - DTC B2910
    - DTC B305A
  - Repair Instructions
    - Intermediate Steering Shaft Replacement
    - Steering Column Upper Trim Cover Replacement
    - Steering Column Lower Trim Cover Replacement
    - Steering Column Lock Control Module Replacement
    - Indicator Switch Bracket Replacement
    - Indicator Multifunction Switch Replacement
    - Steering Wheel Replacement
    - Steering Wheel Spoke Lower Cover Replacement
    - Steering Column Replacement
    - Steering Angle Sensor Replacement
  - Description and Operation
    - Steering Wheel and Column Description and Operation
- 18. Suspension
  - Front Suspension
    - Specifications
      - Fastener Tightening Specifications
    - Repair Instructions
      - Stabiliser Shaft Replacement
      - Stabilizer Shaft Link Replacement
      - Front Wheel Bearing and Hub Replacement
      - Steering Knuckle Replacement
      - Lower Control Arm Replacement
      - Front Lower Control Arm Bush Replacement
      - Wheel Stud Replacement
      - Strut Assembly Removal and Installation
      - Suspension Shock/Strut Disposal
      - Strut, Strut Component, or Spring Replacement
    - Description and Operation
      - Front Suspension Description and Operation

- Special Tools and Equipment
  - Special Tools
- Rear Suspension
  - Specifications
    - Fastener Tightening Specifications
    - Adhesives, Fluids, Lubricants, and Sealers
  - Repair Instructions
    - Rear Wheel Bearing and Hub Replacement
    - Shock Absorber Replacement
    - Shock Absorber Disposal
    - Rear Spring, Insulator, and Jounce Bumper Replacement
    - Rear Axle Replacement
    - Wheel Stud Replacement
  - Description and Operation
    - Rear Suspension Description and Operation
  - Special Tools and Equipment
    - Special Tools
- Suspension General Diagnosis
  - Specifications
    - Trim Height Specifications
  - Diagnostic Information and Procedures
    - Body Leans or Sways in Corners
    - Torque Steer
    - Memory Steer
    - Trim Height Inspection
- Tire Pressure Monitoring
  - Schematic and Routing Diagrams
    - Tyre Pressure Monitoring System Schematics
  - Diagnostic Information and Procedures
    - DTC C0569
    - DTC C0750, C0755, C0760, or C0765
    - DTC C0775
    - Symptoms - Tire Pressure Monitoring
    - Low Tyre Pressure Indicator Malfunction
  - Repair Instructions
    - Tire Pressure Indicator Sensor Replacement
  - Description and Operation
    - Tire Pressure Monitor Description and Operation
- Tyres and Wheels
  - Specifications
    - Fastener Tightening Specifications
    - Adhesives, Fluids, Lubricants, and Sealers
  - Repair Instructions

- Tyre and Wheel Removal and Installation
- Special Tools and Equipment
  - Special Tools
- Wheel Alignment
  - Specifications
    - Wheel Alignment Specifications
    - Fastener Tightening Specifications
  - Repair Instructions
    - Wheel Alignment Measurement
    - Wheel Alignment - Steering Wheel Angle and/or Front Toe Adjustment
    - Rear Camber Adjustment
    - Rear Toe Adjustment
  - Description and Operation
    - Caster Description
- 19. Transmission
  - Automatic Transmission – 4ET50
    - Specifications
      - Fastener Tightening Specifications
      - Transmission General Specifications
      - Fluid Pump Selective Specifications
      - Taper Bearing Preload Selective Specifications
      - Range Reference
      - Shift Solenoid Valve State and Gear Ratio
      - Solenoid Valve Pressure Specifications
      - Transmission Internal Mode Switch Logic
      - Transmission Fluid Pressure Switch Logic
    - Schematic and Routing Diagrams
      - Automatic Transmission Controls Schematics
    - Component Locator
      - Disassembled Views
      - Component Location
      - Bushing, Bearing, and Washer Locations
      - Seal Locations
      - Ball Check Valve Locations
      - Fluid Passages
    - Diagnostic Information and Procedures
      - DTC P0601-P0606, P060B, P062F, P16F3, P16F7, P16F8, or P179B — TCM
      - DTC P0634
      - DTC P0667, P0668, or P0669
      - DTC P06AC, P06AD, or P06AE
      - DTC P0711, P0712, or P0713
      - DTC P0721
      - DTC P0751

-
- DTC P0752
- DTC P0756
- DTC P0757
- DTC P0776 or P0777
- DTC P077B
- DTC P0796 or P0797
- DTC P079A
- DTC P079B
- DTC P079C
- DTC P07A3
- DTC P07A5
- DTC P07A7
- DTC P0961-P0963
- DTC P0965-P0967
- DTC P0969-P0971
- DTC P0973 or P0974
- DTC P0976 or P0977
- DTC P1762
- DTC P1824, P182A-P182F, P1838, or P1839
- DTC P215B
- DTC P215C
- DTC P2534 or P2535
- DTC P2537
- DTC P2714 or P2715
- DTC P2719-P2721
- DTC P2728-P2730
- Symptoms - Automatic Transmission
- Drive Motor Generator Power Inverter Module Cable Inspection
- Control Solenoid Valve and Transmission Control Module Assembly Inspection
- Control Solenoid Valve and Transmission Control Module Assembly Output Shaft Speed Input Test
- Control Solenoid Valve and Transmission Control Module Assembly Solenoid Performance Test
- Control Valve Body Diagnostic Inspection
- Transmission Fluid Level and Condition Check
- Line Pressure Check
- Road Test
- Clutch Plate Diagnosis
- Engine Coolant/Water in Transmission
- Automatic Transmission Overheating
- Case Porosity Repair
- Transmission Fluid Cooler Flushing and Flow Test
- Bushing and Mating Shaft Inspection
- Main Fluid Pump Pressure High or Low

Auxiliary Fluid Pump Pressure High or Low

- Automatic Transmission Fluid Leaks
- Fluid Leak Diagnosis
- Whine/Growl Noise That Changes with Vehicle Speed
- Noise in Drive or Reverse Gear
- Vibration
- Noise and Vibration Analysis
- No Park or Drive
- No Drive in All Ranges
- No Reverse Gear
- No Drive or Reverse Gear
- Harsh, Soft, Delayed or Slipping Drive or Reverse Gear
- Stuck in Drive or Reverse Gear
- Harsh Garage Shift

Repair Instructions

- Auxiliary Fluid Pump Control Module Replacement
- Transmission Control Lever Knob Replacement
- Transmission Control Replacement
- Automatic Transmission Range Selector Lever Replacement
- Range Selector Lever Cable Replacement
- Range Selector Lever Cable Adjustment
- Range Selector Lever Cable Bracket Replacement
- Transmission Fluid Replacement
- Transmission Fluid Cooler Thermal Bypass Valve Replacement
- Transmission Fluid Cooler Pipe Connector Replacement - Radiator
- Transmission Fluid Cooler Hose/Pipe Quick-Connect Fitting Disconnection and Connection
- Transmission Fluid Auxiliary Cooler Replacement
- Transmission Fluid Cooler Outlet Pipe Replacement
- Transmission Fluid Cooler Inlet Pipe Replacement
- Automatic Transmission Fluid Pressure Test Hole Plug Replacement
- Front Wheel Drive Shaft Seal Replacement - Left Side
- Front Wheel Drive Shaft Seal Replacement - Right Side
- Manual Shift Shaft Position Switch Replacement
- Control Valve Body Cover Replacement
- Control Valve Body Replacement
- Control Solenoid Valve and Transmission Control Module Assembly Replacement
- Transmission Mount Bracket Replacement - Rear
- Transmission Mount Transmission-Side Bracket Replacement
- Transmission Mount Replacement - Left Side
- Transmission Rear Mount Replacement
- Transmission Replacement
- Holding Fixture Installation
- Torque Dampener Removal

Control Valve Body Cover Removal

-
- Control Solenoid Valve and Transmission Control Module Assembly Removal
- Manual Shift Shaft Position Switch and Fluid Level Control Valve Removal
- Control Valve Body and Channel Plate Removal
- Output Shaft Removal
- Torque Dampener and Differential Housing with Fluid Pump Removal
- Front Differential Carrier Assembly Removal
- 1-3-Reverse Clutch, Input Clutch Hub, and Hub Shaft Removal
- Drive Motor Generator Rotor and Stator Removal – Unit A
- Automatic Transmission Wiring Harness and Output Speed Sensor Removal
- Park Pawl and Manual Shift Shaft Removal
- Front Differential Drive Pinion Gear with Transfer Gear Removal
- Front Wheel Drive Shaft Seal Removal – Case Side
- Case Extension Assembly Removal
- Case Cover Removal
- Drive Motor Generator Rotor and Stator Removal – Unit B
- Output Sun Gear, Sun Gear Shaft, Carrier, and Carrier Shell Removal
- Variable High and 2-3-4 Clutch Hub and Clutch Removal
- Centre Support Assembly Removal
- Drive Motor Power Inverter Module Cable Terminal Insulator Block Removal
- Variable High and 2-3-4, Variable Low and 1-2 Reverse, and 1-3 Reverse Clutch Accumulator Piston Removal
- Transmission Case Cleaning and Inspection
- Manual Shift Shaft Seal Removal
- Front Differential Drive Pinion Gear Bearing Cup Replacement – Case Side
- Front Differential Drive Pinion Gear Roller Bearing and Lubricant Dam Replacement
- Variable High and 2-3-4, Variable Low and 1-2 Reverse, and 1-3 Reverse Clutch Accumulator Piston Installation
- Drive Motor Power Inverter Module Cable Terminal Insulator Block Installation
- Torque Dampener and Differential Housing with Fluid Pump Disassemble
- Torque Dampener and Differential Housing Cleaning and Inspection
- Front Wheel Drive Shaft Seal Replacement – Torque Dampener Side
- Front Differential Drive Pinion Gear Bearing Cup Removal – Torque Dampener Side
- Front Differential Drive Pinion Gear Roller Bearing and Lubricant Dam Removal – Torque Dampener Side
- Auxiliary Fluid Pump Motor and Fluid Pump Disassemble
- Input Shaft Bearing Replacement
- 1-3-Reverse Clutch Housing Seal Replacement
- Fluid Pump Body, Torque Dampener Fluid Seal, and Torque Dampener Bearing Disassemble
- Fluid Pump Body Cleaning and Inspection
- Fluid Pump Body, Torque Dampener Fluid Seal, and Torque Dampener Bearing Assemble
- Fluid Pump Selective Measurement
- Auxiliary Fluid Pump Motor and Fluid Pump Assemble
- Torque Dampener and Differential Housing with Fluid Pump Assemble
- Drive Motor Generator Position Sensor Stator Removal
- Centre Support Assembly Disassemble
- Variable Low and 1-2 Reverse Clutch Piston Removal

-
- Variable Low and 1-2 Reverse Clutch Housing and Front Differential Transfer Drive Gear Disassemble
- Input Sun Gear Thrust Bearing Replacement
- Variable High and 2-3-4 Clutch Seal Installation
- Variable Low and 1-2 Reverse Clutch Housing and Front Differential Transfer Drive Gear Assemble
- Variable Low and 1-2 Reverse Clutch Piston Installation
- Centre Support Assembly Assemble
- Variable Low and 1-2 Reverse Clutch Piston Air Check
- Drive Motor Generator Position Sensor Stator Installation
- Variable High and 2-3-4 Clutch Disassemble
- Centre Support Roller Bearing Replacement
- Variable High and 2-3-4 Clutch Assemble
- Variable High and 2-3-4 Clutch Piston Air Check
- Centre Support Assembly Installation
- Variable High and 2-3-4 Clutch and Hub Installation
- Output Carrier Bearing Replacement
- Output Carrier Shell, Carrier, Sun Gear, and Sun Gear Shaft Installation
- Drive Motor Generator Rotor and Stator Installation – Unit B
- Case Cover Assembly Disassemble
- Case Cover Assembly Assemble
- Case Cover Assembly Installation
- Front Wheel Drive Shaft Bearing Replacement
- Case Extension Assembly Installation
- Front Differential Drive Pinion Gear with Transfer Gear Overhaul
- Front Differential Carrier Bearing Replacement
- Front Differential Carrier Cleaning and Inspection
- Front Differential Drive Pinion Gear Bearing Thrust Washer and Front Differential Bearing Washer Measurement
- Front Differential Drive Pinion Gear Bearing Cup Installation – Torque Dampener Side
- Front Differential Drive Pinion Gear Roller Bearing and Lubricant Dam Installation – Torque Dampener Side
- Front Differential Drive Pinion Gear with Transfer Gear Installation
- Park Pawl and Manual Shift Shaft Installation
- Manual Shift Shaft Seal Installation
- Automatic Transmission Wiring Harness and Output Speed Sensor Installation
- Drive Motor Generator Rotor and Stator Installation – Unit A
- Input Clutch Hub and Shaft Installation
- 1-3-Reverse Clutch Disassemble
- Input Shaft Seal Replacement
- 1-3-Reverse Clutch Assemble
- 1-3-Reverse Clutch Piston Air Check
- 1-3-Reverse Clutch Installation
- Front Differential Carrier Installation
- Torque Dampener and Differential Housing with Fluid Pump Installation
- Front Differential Carrier Final Rotational Torque Measurement

Output Shaft Installation

- Front Wheel Drive Shaft Seal Installation – Case Side
- Control Valve Body Assembly Disassemble
- Control Valve Body Cleaning and Inspection
- Control Valve Body Assembly Assemble
- Control Valve Body and Channel Plate Installation
- Manual Shift Shaft Position Switch and Fluid Level Control Valve Installation
- Control Solenoid Valve and Transmission Control Module Assembly Installation
- Control Valve Body Cover Installation
- Torque Dampener Installation
- Holding Fixture Removal

Description and Operation

- Definitions and Abbreviations
- Transmission Identification Information
- Transmission General Description
- Transmission Component and System Description
- Hybrid Transmission Modes of Operation
- Transmission Adaptive Functions
- Transmission Indicators and Messages
- Electronic Component Description
- Park Engine Off
- Park Engine On
- Neutral Engine Off
- Neutral Engine On
- Engine Start
- Reverse Output Split Engine Off
- Reverse Output Split Engine On
- Reverse Series Mode Engine Off
- Reverse Series Mode Engine On
- Drive Series Mode Engine Off
- Drive Series Mode Engine On
- Drive Output Split Engine Off
- Drive Output Split Engine On
- Power Off Default

Special Tools and Equipment

- Special Tools

Shift Lock Control

Schematic and Routing Diagrams

- Shift Lock Control Schematics

Diagnostic Information and Procedures

- DTC B270A
- Symptoms - Automatic Transmission Shift Lock Control
- Transmission Control Lever Malfunction

Description and Operation

Automatic Transmission Shift Lock Control Description and Operation

It works!

This is the default web page for this server.

The web server software is running but no content has been added, yet.

Fuel Gage Leak Warning

Warning: Wrap a shop towel around the fuel pressure connection in order to reduce the risk of fire and personal injury. The towel will absorb any fuel leakage that occurs during the connection of the fuel pressure gage. Place the towel in an approved container when the connection of the fuel pressure gage is complete.

© Copyright Chevrolet. All rights reserved

Fuel Pipe Fitting Warning

Warning: Always apply a few drops of clean engine oil to the male pipe ends before connecting the fuel pipe fittings. This will ensure proper reconnection and prevent a possible fuel leak. Always replace O-rings.

© Copyright Chevrolet. All rights reserved

Fuel Storage Warning

Warning: Do not drain the fuel into an open container. Never store the fuel in an open container due to the possibility of a fire or an explosion.

© Copyright Chevrolet. All rights reserved

Fuel Vapour in Evaporative Emission Components Warning

Warning: Do not breathe the air through the EVAP component tubes or hoses. The fuel vapours inside the EVAP components may cause personal injury.

© Copyright Chevrolet. All rights reserved

Gasoline/Gasoline Vapors Warning

Warning: Fuel and fuel vapours are highly flammable. A fire could occur if an ignition source is present. Never drain or store petrol or diesel fuel in an open container, due to the possibility of fire or explosion. Follow national legal regulations.

© Copyright Chevrolet. All rights reserved

Glass and Sheet Metal Handling Warning

Warning: When working with any type of glass or sheet metal with exposed or rough edges, wear approved safety glasses and gloves in order to reduce the chance of personal injury.

© Copyright Chevrolet. All rights reserved

Halogen Bulb Warning

Warning: Halogen bulbs contain gas under pressure. Handling a bulb improperly could cause it to shatter into flying glass fragments. To help avoid personal injury:

- Turn off the lamp switch and allow the bulb to cool before changing the bulb.
- Leave the lamp switch OFF until the bulb change is complete.
- Always wear eye protection when changing a halogen bulb.
- Handle the bulb only by its base. Avoid touching the glass.
- Keep dirt and moisture off the bulb.
- Properly dispose of the used bulb.
- Keep halogen bulbs out of the reach of children.

&#169© Copyright Chevrolet. All rights reserved

Bonnet Hold-Open Device Warning

Warning: When a bonnet hold open device is being removed or installed, provide alternate support to avoid the possibility of damage to the vehicle or personal injury.

© Copyright Chevrolet. All rights reserved

Hot Exhaust System Warning

Warning: While engine is operating, the exhaust system will become extremely hot. To prevent burns avoid contacting a hot exhaust system.

© Copyright Chevrolet. All rights reserved

Moving Parts and Hot Surfaces Warning

Warning: Avoid contact with moving parts and hot surfaces while working around a running engine in order to prevent physical injury.

© Copyright Chevrolet. All rights reserved

Protective Goggles and Glove Warning

Warning: Always wear protective goggles and gloves when removing exhaust parts as falling rust and sharp edges from worn exhaust components could result in serious personal injury.

© Copyright Chevrolet. All rights reserved

Relieving Fuel Pressure Warning

Warning: Remove the fuel tank cap and relieve the fuel system pressure before servicing the fuel system in order to reduce the risk of personal injury. After you relieve the fuel system pressure, a small amount of fuel may be released when servicing the fuel lines, the fuel injection pump, or the connections. In order to reduce the risk of personal injury, cover the fuel system components with a shop towel before disconnection. This will catch any fuel that may leak out. Place the towel in an approved container when the disconnection is complete.

© Copyright Chevrolet. All rights reserved

Road Test Warning

Warning: Road test a vehicle under safe conditions and while obeying all traffic laws. Do not attempt any maneuvers that could jeopardize vehicle control. Failure to adhere to these precautions could lead to serious personal injury and vehicle damage.

© Copyright Chevrolet. All rights reserved

Safety Glasses and Compressed Air Warning

Warning: Wear safety glasses when using compressed air in order to prevent eye injury.

© Copyright Chevrolet. All rights reserved

Safety Glasses Warning

Warning: Wear safety glasses in order to avoid eye damage.

© Copyright Chevrolet. All rights reserved

Safety Goggles and Fuel Warning

Warning: Always wear safety goggles when working with fuel in order to protect the eyes from fuel splash.

© Copyright Chevrolet. All rights reserved

SIR Deployed Inflator Modules Are Hot Warning

Warning: After deployment, the metal surfaces of the SIR component may be very hot. To help avoid a fire or personal injury:

- Allow sufficient time for cooling before touching any metal surface of the SIR component.
- Do not place the deployed SIR component near any flammable objects.

&#169© Copyright Chevrolet. All rights reserved

SIR Inflatable Module Deployment Outside Vehicle Warning

Warning: When you are deploying an inflator module for disposal, perform the deployment procedures in the order listed. Failure to follow the procedures in the order listed may result in personal injury.

© Copyright Chevrolet. All rights reserved

SIR Inflator Module Disposal Warning

Warning: In order to prevent accidental deployment and the risk of personal injury, do not dispose of an undeployed inflator module as normal shop waste. Undeployed inflator modules contain substances that could cause severe illness or personal injury if their sealed containers are damaged during disposal. Use the following deployment procedures to safely dispose of an undeployed inflator module. Failure to observe the following disposal methods may be a violation of federal, state, or local laws.

© Copyright Chevrolet. All rights reserved

SIR Inflator Module Handling and Storage Warning

Warning: When carrying an undeployed inflater module:

- Do not carry the inflator module by the wires or connector.
- Make sure the air bag opening points away from you.

When storing an undeployed inflator module:

- Make sure the air bag opening points away from the surface on which the inflator module rests.
- Provide free space for the air bag to expand in case of an accidental deployment.
- When storing a steering column, do not rest the column with the air bag opening facing down and the column vertical. Lay the column on its side.

Failure to observe these guidelines may result in personal injury.

&#169© Copyright Chevrolet. All rights reserved

SIR Seatbelt Pretensioner Handling Warning

Warning: When carrying an undeployed inflatable restraint seat belt retractor pretensioner:

- Do not carry the seat belt pretensioner by the seat belt webbing or pigtail connector, if equipped.
- Carry the seat belt pretensioner by the housing, keeping hands and fingers away from the seat belt webbing.
- Make sure the opening, from which the seat belt webbing extends, faces downward and the seat belt webbing hangs freely.

Failure to observe these guidelines may result in personal injury.

&#169© Copyright Chevrolet. All rights reserved

SIR Special Tool Warning

Warning: Failure to observe the special tool recommendations and instructions could cause SIR deployment, personal injury, or unnecessary SIR system repairs.

© Copyright Chevrolet. All rights reserved

SIR Warning

Warning: This vehicle is equipped with a Supplemental Inflatable Restraint (SIR) System. Failure to follow the correct procedure could cause the following conditions:

- Air bag deployment
- Personal injury
- Unnecessary SIR system repairs

In order to avoid the above conditions, observe the following guidelines:

- Refer to SIR Component Views in order to determine if you are performing service on or near the SIR components or the SIR wiring.
- If you are performing service on or near the SIR components or the SIR wiring, disable the SIR system. Refer to Disabling the SIR System.

&#169© Copyright Chevrolet. All rights reserved

Steering Angle Sensor Initialisation Warning

Warning: For vehicles with electric power steering (EPS) and without a vehicle stability enhancement program, the steering angle sensor MUST always be initialised after the battery has been disconnected. Failure to initialise the steering angle sensor could limit the operation of the EPS system and result in personal injury.

To ensure proper initialisation of the EPS system, do the following:

1. The engine should be running with the vehicle stationary.
2. Turn the steering wheel anti-clockwise until it stops.
3. Turn the steering wheel clockwise until it stops.

© Copyright Chevrolet. All rights reserved

Torque-to-Yield Fastener Warning

Warning: This component is equipped with torque-to-yield fasteners. Install a NEW torque-to-yield fastener when installing this component. Failure to replace the torque-to-yield fastener could cause bodily injury and damage to the vehicle or component.

© Copyright Chevrolet. All rights reserved

Window Retention Warning

Warning: When replacing stationary windows, only use a single component adhesive kit, or an adhesive system meeting GM Specifications, to maintain original installation integrity. Failure to use the single component adhesive kit will result in poor retention of the window, which may allow unrestrained occupants to be ejected from the vehicle resulting in personal injury.

© Copyright Chevrolet. All rights reserved

Work Stall Test Warning

Warning: One or more of the following guidelines may apply when performing specific required tests in the work stall:

- When a test requires spinning the drive wheels with the vehicle jacked up, adhere to the following precautions:
  - Do not exceed 56 km/h (35 mph) when spinning one drive wheel with the other drive wheel stopped. This limit is necessary because the speedometer indicates only one-half the actual vehicle speed under these conditions. Personal injury may result from excessive wheel spinning.
  - If all of the drive wheels are spinning at the same speed, do not exceed 112 km/h (70 mph). Personal injury may result from excessive wheel spinning.
  - All persons should stay clear of the rotating components and the balance weight areas in order to avoid possible personal injury.
  - When running an engine in the repair stall for an extended period of time, use care not to overheat the engine and the transmission.
- When a test requires jacking up the vehicle and running with the wheels and brake rotors removed, adhere to the following precautions:
  - Support the suspension at normal ride height.
  - Do not apply the brake with the brake rotors removed.
  - Do not place the transmission in PARK with the drive axles spinning.
  - Turn Off the ignition in order to stop the powertrain components from spinning.
- When running an engine in the work stall, use the exhaust removal system to prevent breathing dangerous gases.

&#169© Copyright Chevrolet. All rights reserved

Air in the Power Steering System Caution

Caution: If the power steering system has been serviced, an accurate fluid level reading cannot be obtained unless air is bled from the steering system. The air in the fluid may cause pump cavitation noise and may cause pump damage over a period of time.

© Copyright Chevrolet. All rights reserved

Avoid Chipping or Scratching the Coating Caution

Caution: Care should be taken to avoid chipping or scratching the coating when handling the suspension coil spring. Damage to the coating can cause premature failure.

© Copyright Chevrolet. All rights reserved

Ball Stud Removal Caution

Caution: Do not free the ball stud by using a pickle fork or a wedge-type tool. Damage to the seal or bushing may result.

© Copyright Chevrolet. All rights reserved

Belt Dressing Caution

Caution: Do not use belt dressing on the drive belt. Belt dressing causes the breakdown of the composition of the drive belt. Failure to follow this recommendation will damage the drive belt.

© Copyright Chevrolet. All rights reserved

Brake Caliper Caution

Caution: Support the caliper with a piece of wire to prevent damage to the brake line.

© Copyright Chevrolet. All rights reserved

Brake Fluid Effects on Paint and Electrical Components Caution

Caution: Avoid spilling brake fluid onto painted surfaces, electrical connections, wiring, or cables. Brake fluid will damage painted surfaces and cause corrosion to electrical components. If any brake fluid comes in contact with painted surfaces, immediately flush the area with water. If any brake fluid comes in contact with electrical connections, wiring, or cables, use a clean shop cloth to wipe away the fluid.

© Copyright Chevrolet. All rights reserved

Clearcoat/Ultraviolet Screeners Caution

Caution: Removing more than 0.5 mils of the clearcoat can result in early paint failure. The clearcoat contains ultraviolet screeners. Do not finesse sand more than what is required to remove the defect.

© Copyright Chevrolet. All rights reserved

Component Fastener Tightening Caution

Caution: Replacement components must be the correct part number for the application. Components requiring the use of the thread locking compound, lubricants, corrosion inhibitors, or sealants are identified in the service procedure. Some replacement components may come with these coatings already applied. Do not use these coatings on components unless specified. These coatings can affect the final torque, which may affect the operation of the component. Use the correct torque specification when installing components in order to avoid damage.

© Copyright Chevrolet. All rights reserved

Drive Axle Caution

Caution: Support the lower control arms in the normal horizontal position in order to avoid damage to the drive axles. Do not operate the vehicle in gear with the wheels hanging down at full travel.

© Copyright Chevrolet. All rights reserved

Engine Coolant Thermostat Housing Caution

Caution: Use care when performing this procedure. Use of excessive force may damage the coolant thermostat.

© Copyright Chevrolet. All rights reserved

Exterior Trim Emblem Removal Caution

Caution: Use a plastic, flat-bladed tool to prevent paint damage when removing an emblem/name plate.

© Copyright Chevrolet. All rights reserved

Fastener Caution

Caution: Use the correct fastener in the correct location. Replacement fasteners must be the correct part number for that application. Do not use paints, lubricants, or corrosion inhibitors on fasteners, or fastener joint surfaces, unless specified. These coatings affect fastener torque and joint clamping force and may damage the fastener. Use the correct tightening sequence and specifications when installing fasteners in order to avoid damage to parts and systems. When using fasteners that are threaded directly into plastic, use extreme care not to strip the mating plastic part(s). Use hand tools only, and do not use any kind of impact or power tools. Fastener should be hand tightened, fully seated, and not stripped.

© Copyright Chevrolet. All rights reserved

Filling the Master Cylinder Caution

Caution: When filling the master cylinder, use only Super DOT-4 brake fluid, or equivalent DOT-4 brake fluid. Do not use a container which has been used for petroleum based fluids, or a container which is wet with water. Petroleum based fluids will cause swelling and distortion of rubber parts in the hydraulic brake system, and water will mix with brake fluid, lowering the boiling point. Keep all fluid containers capped to prevent contamination.

© Copyright Chevrolet. All rights reserved

Fuel and Evaporative Emission Hose/Pipe Connection Cleaning Caution

Caution: Clean all of the following areas before performing any disconnections in order to avoid possible contamination in the system:

- The fuel pipe connections
- The hose connections
- The areas surrounding the connections

&#169© Copyright Chevrolet. All rights reserved

Heated Oxygen and Oxygen Sensor Caution

Caution: Do not remove the pigtail from either the heated oxygen sensor (HO2S) or the oxygen sensor (O2S). Removing the pigtail or the connector will affect sensor operation.

Handle the oxygen sensor carefully. Do not drop the HO2S. Keep the in-line electrical connector and the louvered end free of grease, dirt, or other contaminants. Do not use cleaning solvents of any type.

Do not repair the wiring, connector or terminals. Replace the oxygen sensor if the pigtail wiring, connector, or terminal is damaged.

This external clean air reference is obtained by way of the oxygen sensor signal and heater wires. Any attempt to repair the wires, connectors, or terminals could result in the obstruction of the air reference and degraded sensor performance.

The following guidelines should be used when servicing the heated oxygen sensor:

- Do not apply contact cleaner or other materials to the sensor or vehicle harness connectors. These materials may get into the sensor causing poor performance.
- Do not damage the sensor pigtail and harness wires in such a way that the wires inside are exposed. This could provide a path for foreign materials to enter the sensor and cause performance problems.
- Ensure the sensor or vehicle lead wires are not bent sharply or kinked. Sharp bends or kinks could block the reference air path through the lead wire.
- Do not remove or defeat the oxygen sensor ground wire, where applicable. Vehicles that utilize the ground wired sensor may rely on this ground as the only ground contact to the sensor. Removal of the ground wire will cause poor engine performance.
- Ensure that the peripheral seal remains intact on the vehicle harness connector in order to prevent damage due to water intrusion. The engine harness may be repaired using Packard's Crimp and Splice Seals Terminal Repair Kit. Under no circumstances should repairs be soldered since this could result in the air reference being obstructed.

&#169© Copyright Chevrolet. All rights reserved

Heated Oxygen Sensor Resistance Learn Reset Caution

Caution: When replacing the HO2S perform the following:

- A code clear with a scan tool, regardless of whether or not a DTC is set
- HO2S heater resistance learn reset with a scan tool, where available

Perform the above in order to reset the HO2S resistance learned value and avoid possible HO2S failure.

&#169© Copyright Chevrolet. All rights reserved

Installing Hoses without Twists or Bends Caution

Caution: The inlet and outlet hoses must not be twisted during installation. Do not bend or distort the inlet or outlet hoses to make installation easier. Failure to follow these procedures could result in component damage.

© Copyright Chevrolet. All rights reserved

Paint Damage Caution

Caution: To avoid paint damage, protect the area surrounding the part which you are removing or installing.

© Copyright Chevrolet. All rights reserved

Pipe Wrench Positioning Caution

Caution: The pipe wrench must be placed at the valve end of the steering gear and positioned up against the inner tie rod housing. Placing the pipe wrench in any other location will cause damage to the steering gear.

© Copyright Chevrolet. All rights reserved

Power Steering Hose Disconnected Caution

Caution: Do not start the vehicle with any power steering gear inlet or outlet hoses disconnected. When disconnected, plug or cap all openings of components. Failure to do so could result in contamination or loss of power steering fluid and damage to the system.

© Copyright Chevrolet. All rights reserved

Silicon Contamination of Heated Oxygen Sensors Caution

Caution: Contamination of the oxygen sensor can result from the use of an inappropriate RTV sealant (not oxygen sensor safe) or excessive engine coolant or oil consumption. Remove the HO2S and visually inspect the portion of the sensor exposed to the exhaust stream in order to check for contamination. If contaminated, the portion of the sensor exposed to the exhaust stream will have a white powdery coating. Silicon contamination causes a high but false HO2S signal voltage (rich exhaust indication). The control module will then reduce the amount of fuel delivered to the engine, causing a severe driveability problem. Eliminate the source of contamination before replacing the oxygen sensor.

© Copyright Chevrolet. All rights reserved

Steering Column in Lock Position Caution

Caution: With wheels of the vehicle facing straight ahead, secure the steering wheel utilising steering column anti-rotation pin, steering column lock, or a strap to prevent rotation. Locking of the steering column will prevent damage and a possible malfunction of the SIR system. The steering wheel must be secured in position before disconnecting the following components:

- The steering column
- The steering shaft coupling
- The intermediate shaft(s)

After disconnecting these components, do not rotate the steering wheel or move the front tires and wheels. Failure to follow this procedure may cause the SIR coil assembly to become un-centered and cause possible damage to the SIR coil. If you think the SIR coil has became un-centered, refer to your specific SIR coil's centering procedure to re-center SIR Coil.

&#169© Copyright Chevrolet. All rights reserved

Steering Gear Preload Adjustment Caution

Caution: Do not change the steering gear preload adjustment before moving the inner tie rod from the steering gear. Changing the steering gear preload adjustment before moving the inner tie rod could result in damage to the pinion and the steering gear.

© Copyright Chevrolet. All rights reserved

Steering Wheel in the Full Turn Position Caution

Caution: Do not hold the steering wheel in the full turn position longer than 5 seconds, as damage to the steering pump may result.

© Copyright Chevrolet. All rights reserved

Steering Wheel Straight and Column Locked Caution

Caution: With wheels of the vehicle facing straight ahead, secure the steering wheel utilising steering column anti-rotation pin, steering column lock, or a strap to prevent rotation. Locking of the steering column will prevent damage and a possible malfunction of the SIR system. The steering wheel must be secured in position before disconnecting the following components:

- The steering column
- The intermediate shaft(s)
- The steering gear

After disconnecting these components, do not rotate the steering wheel or move the front tires and wheels. Failure to follow this procedure may cause the SIR coil assembly to become un-centered and cause possible damage to the SIR coil. If you think the SIR coil has became un-centered, refer to your specific SIR coil's centering procedure to re-center SIR Coil.

&#169© Copyright Chevrolet. All rights reserved

Test Probe Caution

Caution: Do not insert test equipment probes (DMM etc.) into any connector or fuse block terminal. The diameter of the test probes will deform most terminals. A deformed terminal will cause a poor connection, which will result in a system failure. Always use the EL-38125-580 GM Approved Terminal Release Tool Kit in order to front probe terminals. Do not use paper clips or other substitutes to probe terminals.

When using the EL-38125-580 GM Approved Terminal Release Tool Kit , ensure the terminal test adapter choice is the correct size for the connector terminal. Do not visually choose the terminal test adapter because some connector terminal cavities may appear larger than the actual terminal in the cavity. Using a larger terminal test adapter will damage the terminal. Refer to the EL-38125-580 GM Approved Terminal Release Tool Kit label on the inside of the EL-38125-580 GM Approved Terminal Release Tool Kit for the correct adapter along with the connector end view for terminal size.

© Copyright Chevrolet. All rights reserved

Three-Way Catalytic Converter Damage Caution

Caution: In order to avoid damaging the replacement three-way catalytic converter, correct the engine misfire or mechanical fault before replacing the three-way catalytic converter.

© Copyright Chevrolet. All rights reserved

Torque Reaction Against Timing Drive Chain Caution

Caution: A wrench must be used on the hex of the camshaft when loosening or tightening in order to prevent component damage. Failure to prevent the torque reaction against the timing drive chain can lead to timing drive chain failure.

© Copyright Chevrolet. All rights reserved

Torque-to-Yield Fastener Caution

Caution: This component is equipped with torque-to-yield fasteners. Install a NEW torque-to-yield fastener when installing this component. Failure to replace the torque-to-yield fastener could cause damage to the vehicle or component.

© Copyright Chevrolet. All rights reserved

Transmission Fluid Vent Cap Removal Caution

Caution: The fluid vent cap must be removed before checking the fluid level, in order to ensure the proper level. Improper fluid level may damage the transmission.

© Copyright Chevrolet. All rights reserved

Transmission Overfill Caution

Caution: Check the transmission fluid level immediately after adding fluid and before vehicle operation. Do not overfill the transmission. An overfilled transmission may result in foaming or fluid to be expelled out the vent tube when the vehicle is operated. Overfilling will result in possible damage to the transmission.

© Copyright Chevrolet. All rights reserved

Using Proper Power Steering Fluid Caution

Caution: When adding fluid or making a complete fluid change, always use the proper power steering fluid. Failure to use the proper fluid will cause hose and seal damage and fluid leaks.

© Copyright Chevrolet. All rights reserved

Tappet Priming Caution

Caution: Ensure each tappet is filled with clean engine oil and the tappet does not tip over (plunger down) before the installation of the tappets. The loss of oil in the tappet lower pressure chamber or the dry stroking/cycling of the tappet plunger will allow air to travel into the high pressure chamber of the tappet. Air in the high pressure chamber of the tappet may not be purged causing extensive engine component damage.

© Copyright Chevrolet. All rights reserved

Window Edge Damage Caution

Caution: Avoid damage to the window from impacting objects due to an exposed edge. The window must be 1 mm (0.025 in) below the surface of the sheet metal to avoid window damage.

© Copyright Chevrolet. All rights reserved

Safety Regulations for Hybrid/Electric Vehicles

General

Danger: Follow the safety regulations for hybrid/electric vehicles. The High Voltage Qualified Technician is responsible for the adherence to the manufacturer's service instructions as well as current national legal regulations. Failure to follow the regulations exactly as written may result in serious injury or death.

- The handling of high voltage vehicles is subject to various national laws and standards which must be observed at all times. High voltage gloves, high voltage face shields, and protective clothing are personal protective equipment. Their usage is dependent upon the kind of work being performed and the national laws and regulations.
- Only trained and qualified personnel are allowed to work on high voltage vehicles. Depending upon the operation, the following levels of qualification are required:
  - High Voltage Qualified Technician
  - Electrically Aware Technician
- Furthermore, all qualifications require a vehicle-type specific training. In case of any questions regarding high voltage qualification training, please contact the GM Academy.
- The enabling and disabling of high voltage systems shall only be performed by High Voltage Qualified Technicians. The enabling/disabling of a high voltage system must be documented, and this documentation must be kept and filed with the accompanying vehicle documents.
- Only "Electrically Aware Technicians" are allowed to work on high voltage vehicles. Working alone on high voltage components is not allowed.
- High voltage components can be identified by orange-coloured wiring harnesses. In addition all high voltage components are tagged with warning labels.
- The High Voltage system incorporates the following components:
  - (A4) Hybrid/EV Battery Pack
  - (S15) Hybrid/EV Battery Pack High Voltage Manual Disconnect Lever
  - (K1) 14V Power Module
  - (T18) Battery Charger
  - (X98) Hybrid/EV Battery Charger Receptacle
  - (T6) Power Inverter Module
  - (T12) Automatic Transmission Assembly
  - (K10) Coolant Heater Control Module
  - (K118) Electric A/C Compressor Control Module
  - High voltage related wiring harness (orange insulation)

- The vehicle has a low front slope angle of 8°. Careful handling is recommended.
- The vehicle can be only towed with a lifted front axle.
- The 12V battery is located in the boot. There are additional ground and B+ terminals in the engine compartment. These terminals have to be used for external charging, but cannot be used for jump-starting other vehicles.
- Installation of accessories to high voltage components or wiring harnesses is not permitted.

Transportation and Storage of Hybrid/EV Battery Packs

- Only instructed personnel are allowed to transport and store battery packs by adhering to the safety regulations.
- If the diagnostic procedure requires replacement of the battery pack, ensure that the following steps are followed:
  - Inform the Technical Assistance Centre and ask them to confirm the battery pack replacement. Use the required form.
  - Order the replacement battery pack. Use the standard parts ordering system.
  - Prepare the defective battery pack for return.
- Use only the specially designed carrier (special tool) for removing, transporting, and storing battery packs.
- For transportation to another location, use only the special aftersales transport packaging including the covers for cooling and high voltage sockets. If not available, these items must be ordered via Parts and Accessories.
- The carrier has to be ordered from SPX. The transportation case and covers have to be ordered from Parts and Accessories. If the battery pack needs to be replaced, these parts will be used in a recycling process. When the new or refurbished high voltage battery pack has been delivered and installed, the transportation case, the carrier, and the covers will be available for the next battery pack exchange.
- Until pickup or re-installation, the battery pack must be stored in a secure place. Storage with other hazardous materials (e.g., chemicals or paint) is prohibited. The storage area must be identified with the correct hazard symbols and must have suitable fire prevention equipment.

Registration

The Technical Assistance Centre must agree to the replacement of high voltage batteries and their consent is required before the batteries can be exchanged. They will also supply the necessary registration documents. Use the diagnostic tester to read out the high voltage battery's serial number.

Diagnostics

- If the high voltage components are in perfect working order, the display shows no error message after "Power on". Vehicles with an active DTC and an error message regarding the high voltage system must not be handed over to the customer.
- While performing diagnostics on high voltage systems, strictly follow each diagnostic procedure. Do not use any other tools than the specified diagnostic tester and/or special tools.

Repair Information

- While working on high voltage vehicles, strictly follow each service instruction and diagnostic procedure. Failure to follow the procedures may result in damage to components, serious injury, or death!

- While working on a high voltage vehicle, the danger zone must be clearly identified with warning cones and warning tape on all sides of the vehicle. Warning cones are available from the special tools programme.
- Disabling the high voltage system must only be performed by qualified personnel. The instructions for disabling / enabling high voltage systems are part of the service manual.
- Always perform the high voltage disabling procedure prior to servicing any high voltage component or connection. To determine when this is necessary, consult the relevant diagnostic or repair procedure. This is also valid for operations close to high voltage components, connectors or harnesses, if there is the risk of damage to these components.
- If a disabling of the high voltage supply is not possible, contact the Technical Assistance Centre. Working on live high voltage systems is strictly prohibited. It is not permitted to open the housing of high voltage components, wiring plugs, or the battery housing.
- Repairs on high voltage components are not permitted. These components must never be opened or modified. Defective components have to be replaced.
- Repair of high voltage cables and harnesses, including plugs and terminals, is not permitted. Defective wiring harnesses have to be replaced.
- High voltage battery and high voltage control units are sensitive to impact and must therefore be handled with special care. They must be replaced after an impact, e. g., in case a control unit falls to the ground.
- Do not expose the high voltage battery to an object temperature exceeding 60°C / 140°F and for a time of more than 60 minutes.
- For sheet metal, soldering, or welding operations always disconnect the ground cable from the 12 Volt battery.
- If the earth terminal of the welding equipment is too far away from the welding point, the welding current can destroy electric and electronic components. Therefore always attach the earth terminal of the welding equipment as close as possible to the welding point. Remove control units and harnesses that are located close to the welding point.
- Ensure availability of all necessary high voltage safety equipment and tools. Before performing measurements on high voltage systems, check all display segments of the voltmeter and the test leads. In addition, a DC test probe (e. g., 12 Volts) is necessary. Defective components have to be replaced.
- High Voltage wiring harnesses must always be replaced if damage is evident. This is the case if
  - the insulation is damaged (the shielding is visible)
  - defective plug housings, terminals, or lock
  - loss of plug-ability
  - defective sealing
  - fire damage
  - heavily pinched (permanent deformation)
- After each accident a visual check is required by qualified personnel and special attention is required for damages to the fascia, at the underbody, and rear damage. Defective components have to be replaced.
- Especially the battery pack has to be inspected for following damages:
  - crack formation and deformation at the housing
  - crack formation at attachment points
  - damages to the 12 V connectors
  - damages to the high voltage connectors including the socket of the manual disconnect lever
  - crack formation and other damages at the coolant connectors
- If any of these defects are found, the battery pack must be replaced.

- Please contact the Technical Assistance Centre if you have any questions.

&#169© Copyright Chevrolet. All rights reserved

Arrows and Symbols

This service manual uses various symbols in order to describe different service operations.

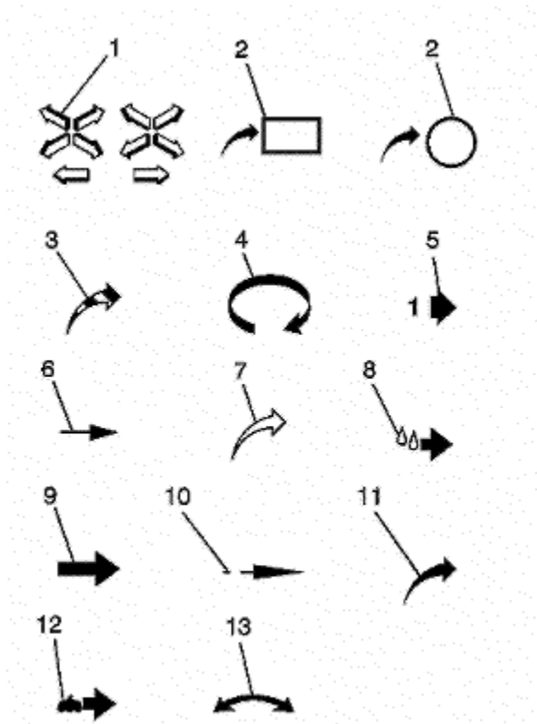

(1) Front of Vehicle
(2) View Detail
(2) View Detail
(3) Ambient Air Mixed with Another Gas or Indicate Temperature Change
(4) Motion or Direction
(5) View Angle
(6) Dimension (1:2)

(7) Ambient/Clean Air Flow or Cool Air Flow
(8) Lubrication Point -- Oil or Fluid
(9) Task Related
(10) Sectioning (1:3)
(11) Gas Other Than Ambient Air or Hot Air Flow
(12) Lubrication Point -- Grease or Jelly
(13) Multidirectional Arrow

© Copyright Chevrolet. All rights reserved

Vehicle, Engine and Transmission ID and VIN Location, Derivative and Usage

VIN Plate

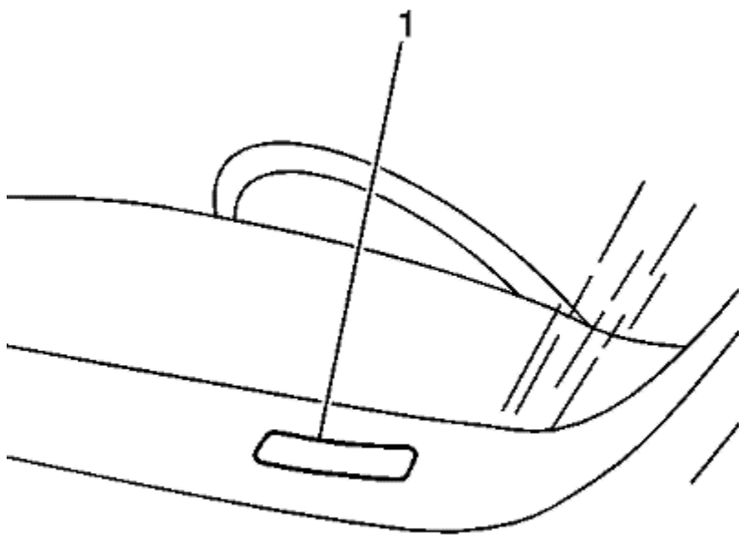

The vehicle identification number (VIN) plate (1) is the legal identifier of the vehicle. The VIN plate is located on the upper left corner of the instrument panel (I/P) and can be seen through the windshield from the outside of the vehicle.

VIN Body Stamping

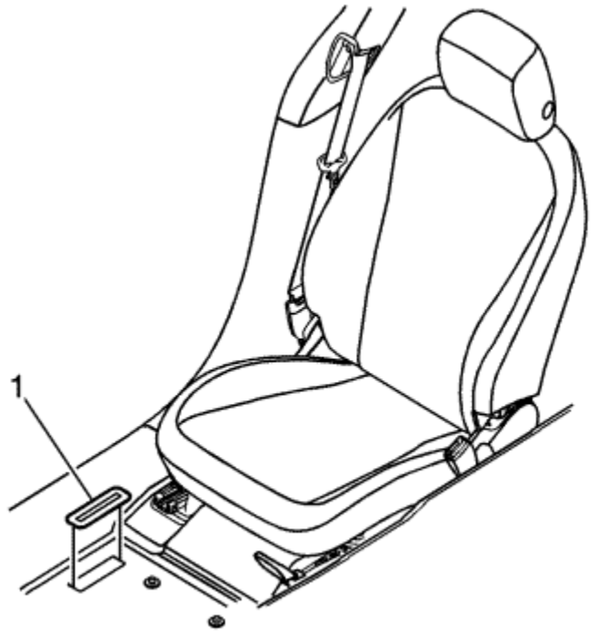

The stamping is located on the front floor panel under the front right-hand floor mat. It can be seen under the VIN Plate Opening Access Cover (1).

Position	Definition	Character	Description
1	Region of Build	1	United States
2	Manufacturer	G	General Motors
3	Vehicle Brand/Type	1	Chevrolet Passenger Car
		0	Opel Passenger Car
4-5	Vehicle Line/Series	R/8	Opel Ampera
		R/9	Volt Export
6	Body Style	6	68-Sedan, 4-Door, 6 Window, Plain Back, (Hatchback)
7	Restraint System	E	Active Manual Belts, Airbags-Driver & Passenger-Front (1st row), Front Seat Side (1st row), Roof Side (all seating rows)
8	Engine Type	4	LUU - Engine Petrol, 4 CYL, 1.4L, MFI, DOHC, E-Flex, FAM 0
9	Check Digit	Varies	Calculated Check Digit
10	Model Year	C	2012
11	Plant Location	U	Hamtramck, MI GMNA
12-17	Production Sequence Number	—	Production Sequence Number

1.4L (LUU) Engine ID and VIN Derivative Location

Refer to Engine Identification .

Transmission ID and VIN Derivative Location

Refer to Transmission Identification Information .

© Copyright Chevrolet. All rights reserved

Vehicle Certification, Tyre Placard, Anti-Theft, and Service Parts ID Label

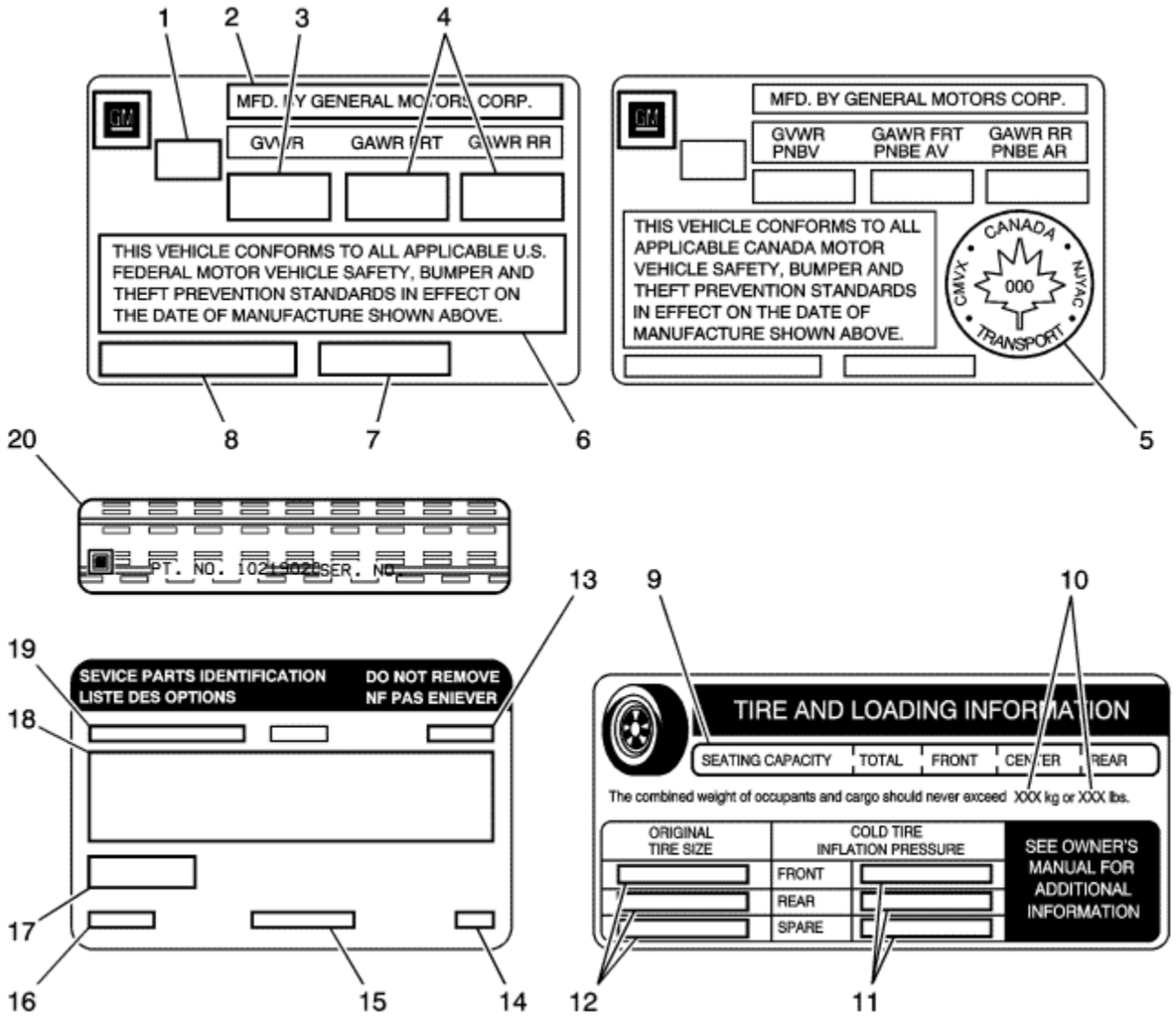

Callout	Description
Vehicle Certification Label	
The vehicle certification label is located on the left-hand side B pillar and displays the following assessments: • Gross Vehicle Weight Rating (GVWR) • Gross Axle Weight Rating (GAWR), front and rear • The gross vehicle weight (GVW) is the weight of the vehicle and everything it carries. The gross vehicle weight must not exceed the Gross Vehicle Weight Rating. Include the following items when figuring the GVW: — The base vehicle weight (factory weight) — The weight of all vehicles accessories — The weight of the driver and the passengers — The weight of the cargo	
1	Name of Manufacturer
2	Gross Vehicle Weight Rating
3	Gross Axle Weight Rating (Front, Rear)
4	Canadian Safety Mark (w/RPO Z49)
5	Certification Statement
6	Vehicle Class Type (Pass Car, etc.)
7	Vehicle Identification Number
8	Date of Manufacture (Mo/Yr)
Tyre Placard	
The tyre placard label is located on the left-hand side B pillar and displays the following assessments:	
9	Specified Occupant Seating Positions
10	Maximum Vehicle Capacity Weight
11	Original Equipment Tires Size
12	Tire Pressure, Front, Rear, and Spare (Cold)
Service Parts ID Label	
The vehicle service parts identification label is located in the rear compartment in the right-hand quarter stowage pocket. The label is use to help identify the vehicle original parts and options.	
13	Vehicle Identification Number
14	Engineering Model Number (Vehicle Division, Line, and Body Style)
15	Interior Trim Level and Decor

16	Exterior (Paint Color) WA Number
17	Paint Technology
18	Special Order Paint Colors and Numbers
19	Vehicle Option Content
Anti-Theft Label	
20	The Federal law requires that General Motors label certain body parts on this vehicle with the VIN. The purpose of the law is to reduce the number of motor vehicle thefts by helping in the tracing and recovery of parts from stolen vehicles. Labels are permanently affixed to an interior surface of the part. The label on the replacement part contains the letter R, the manufacturer's logo, and the DOT symbol. The anti-theft label must be covered before any painting, rustproofing procedures, and uncovered after the procedures. Failure to follow the precautionary steps may result in liability for violation of the Federal Vehicle Theft Prevention Standard and possible suspicion to the owner that the part was stolen.

&#169© Copyright Chevrolet. All rights reserved

RPO Code List

RPO	Description
01A	Trim Colour Seat - Jet Black
01V	Trim Colour Seat - Spice Red
03E	Trim Colour Seat - Ceramic White / Jet Black
1B0	Trim Colour Door Panel Ceramic White MET
1B1	Trim Colour Door Panel Frosted Nickel
1CC	Trim Colour Door Panel - Circuit
4B4	Interior Trim Jet Black / Ceramic White
4B6	Interior Trim Jet Black / Dark Titanium / Frosted Nickel
5A7	Wheel Spare - None
5AJ	Accessory - Charge Cord Set - 220/230V with EURO Plug Type 1
5GM	Tyre All - 215/55R17 SL 94H HW3
5JG	Accessory - Bar - Car Towing
5WC	Accessory - Charge Cord Set - 220/230V with EURO Plug Type 2
9L3	Tyre Spare - None
A51	Seat FRT BKT, Custom
AKF	Restraint - Head, Front Seat, Up/Down, Fore/Aft Adjustment, Passive, Lockable
AY0	Restraint System Seat, Inflatable, Driver and Passenger Front, Seat Side Roof Side
C68	HVAC System - Air Conditioner Front, Auto, Electronic Controls
C99	Switch - INFL RST I/P MDL MAN Suppression
DEH	Plant Code Detroit / Hamtramck, MI, USA
DWM	Mirror O/S - LH & RH, RC, ELEC, Heat, AUX WFOV/DRVR, Manfold, CNVX/PAS, Turn SIG IND
EAL	Trim Seat Leather, Soleil Keisel, Mini PERF
EVB	PROP ENGY STOR PACK - Propulsion Battery, LI, 370V, 45AH, Underbody T
EXP	Export
FE2	Suspension System Ride, Handling
FHO	Vehicle Fuel - Petrol E10

FIF	Trim Door Polycarbonate, Film
FIG	Trim Door Plastic, Painted
FXW	Ratio Transaxle Final Drive 2.16
GAN	Primary Colour Exterior, Switchblade Silver Met (G) 636R
GAZ	Primary Color - Exterior, Olympic White (G) 8624
GBA	Primary Colour Exterior, Black (G)
GBE	Primary Colour - Exterior, Crystal Claret Tintcoat (G) 505Q
GBN	Primary Colour Exterior, White Diamond Tri-Coat (G) 800J
GBV	Primary Colour Exterior, Cyber Gray Met (G) 637R
GLC	Primary Colour Exterior, Urban Fresh Tri-coat 814T
GLF	Primary Colour - Exterior, Space Blue Metallic 819T
GTS	Primary Colour - Exterior, Luxo Blue MET (933L)
J60	Brake System - Power, Front and Rear Disc, ABS, 16"
KA1	Heater - Seat, Front
KTI	Kit, Tyre - Inflator
LHD	Vehicle Drive Left hand drive
LUU	Engine - Petrol, 4 Cyl, 1.4L, MFI, DOHC, E-Flex, FAM 0
MKA	Transmission - Automatic, Electronic Ratio Select, GM, Strong Hybrid, EVT, Plug In
N06	Lock Control - Steering Column, Electrical
N30	Steering Wheel - Deluxe
NE9	Emission System - EEC 09
RHD	Vehicle Drive - Right-hand Drive
RSB	Wheel - 17 X 7, J, Aluminium, Design 1
RVW	Accessory - Bag - Boot/Cargo Area Organiser
RWW	Accessory - Cargo Barrier - Interior
SAC	Accessory - Charge Station - 220/240V
T79	Lamp - Fog, Rear
TVN	Lamp - Tail & Brake, ECE
UBT	Digital Audio System - Broadcast, Text
UD5	Sensor Indicator Parking Assist
UFW	Radio - AM/FM Stereo, Single CD, MP3 (AUX IN), USB, GME
UFX	Radio - AM/FM, DVD ROM & HDD, MP3 (AUX IN), USB, NAV
UH0	Indicator - Seat Belt Warning, LH
UH1	Indicator - Seat Belt Warning, RH

UJN	Tyre Press Indicator - Auto Learn
UPJ	Wireless Interface - Short Range, Voice REC, SMS, Embedded Phone
UQA	Speaker System Premium Audio Branded with Amplifier
US3	Antenna - Diversity
UTP	Alarm, Horn - Content Theft Deterrent
UTR	Alarm, Horn - Content Theft Deterrent, Self Powered
UTT	Theft Deterrent - Body Security Content
UTU	Sensor, Vehicle - Inclination
UTV	Sensor, Vehicle - Interior
UVC	Camera Rear View
UZ6	Speaker System 6, Premium
VL4	License Plate Front - Front Mounting PKG, EEC
VP0	Hook - Tow, Closed Type
W2D	Accessory - Cargo Net
XL8	Frequencies Rating - 433 MHZ
XQ2	Equipment - Vauxhall

© Copyright Chevrolet. All rights reserved

Fasteners

Table 1: Metric Prevailing Torque Fastener Minimum Torque Development
Table 2: English Prevailing Torque Fastener Minimum Torque Development

Metric Fasteners

This vehicle provides fastener dimensions using the metric system. Most metric fasteners are approximate in diameter to equivalent English fasteners. Make replacements using fasteners of the same nominal diameter, thread pitch, and strength.

A number marking identifies the OE metric fasteners except cross-recess head screws. The number also indicates the strength of the fastener material. A Posidrive® or Type 1A cross-recess identifies a metric cross-recess screw. For best results, use a Type 1A cross-recess screwdriver, or equivalent, in Posidrive® recess head screws.

GM Engineering Standards and North American Industries have adopted a portion of the ISO-defined standard metric fastener sizes. The purpose was to reduce the number of fastener sizes used while retaining the best thread qualities in each thread size. For example, the metric M6.0 X 1 screw, with nearly the same diameter and 25.4 threads per inch replaced the English 1/4–20 and 1/4–28 screws. The thread pitch is midway between the English coarse and fine thread pitches.

Fastener Strength Identification

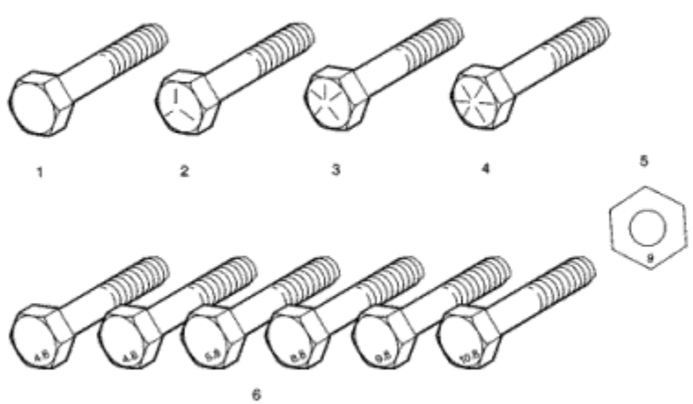

(1) English Bolt, Grade 2 (Strength Class)
(2) English Bolt, Grade 5 (Strength Class)
(3) English Bolt, Grade 7 (Strength Class)
(4) English Bolt, Grade 8 (Strength Class)
(5) Metric Nut, Strength Class 9
(6) Metric Bolts, Strength Class Increases as Numbers Increase

The most commonly used metric fastener strength property classes are 9.8 and 10.9. The class identification is embossed on the head of each bolt. The English, inch strength classes range from grade 2 to grade 8. Radial lines are embossed on the head of each bolt in order to identify the strength class. The number of lines on the head of the bolt is 2 lines less than the actual grade. For example, a grade 8 bolt will have 6 radial lines on the bolt head. Some metric nuts are marked with a single digit strength identification number on the nut face.

The correct fasteners are available through GM SPO. Many metric fasteners available in the aftermarket parts channels are designed to metric standards of countries other than the United States, and may exhibit the following:

- Lower strength
- No numbered head marking system
- Wrong thread pitch

The metric fasteners on GM products are designed to new, international standards. The following are the common sizes and pitches, except for special applications:

- M6.0 x 1
- 8 x 1.25
- M10 x 1.5
- M12 x 1.75
- M14 x 2.00
- M16 x 2.00

Prevailing Torque Fasteners

Prevailing torque fasteners create a thread interface between the fastener and the fastener counterpart in order to prevent the fastener from loosening.

All Metal Prevailing Torque Fasteners

These fasteners accomplish the thread interface by a designed distortion or deformation in the fastener.

Nylon Interface Prevailing Torque Fasteners

These fasteners accomplish the thread interface by the presence of a nylon material on the fastener threads.

Adhesive Coated Fasteners

These fasteners accomplish the thread interface by the presence of a thread-locking compound on the fastener threads. Refer to the appropriate repair procedure in order to determine if the fastener may be reused and the applicable thread-locking compound to apply to the fastener.

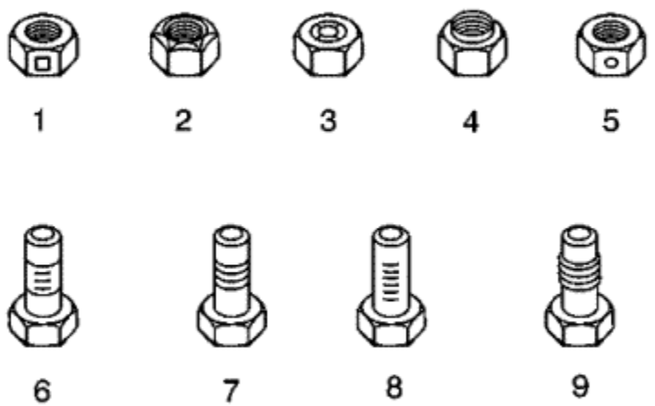

(1) Prevailing Torque Nut, Centre Lock Type
(2) Prevailing Torque Nut, Top Lock Type
(3) Prevailing Torque Nut, Nylon Patch Type
(4) Prevailing Torque Nut, Nylon Washer Insert Type
(5) Prevailing Torque Nut, Nylon Insert Type
(6) Prevailing Torque Bolt, Dry Adhesive Coating Type
(7) Prevailing Torque Bolt, Thread Profile Deformed Type
(8) Prevailing Torque Bolt, Nylon Strip Type
(9) Prevailing Torque Bolt, Out-of-Round Thread Area Type

A prevailing torque fastener may be reused ONLY if:

- The fastener and the fastener counterpart are clean and not damaged
- There is no rust on the fastener

- The fastener develops the specified minimum torque against its counterpart prior to the fastener seating

Metric Prevailing Torque Fastener Minimum Torque Development

Application	Specification	
	Metric	English
All Metal Prevailing Torque Fasteners		
6 mm	0.4 N·m	4 lb in
8 mm	0.8 N·m	7 lb in
10 mm	1.4 N·m	12 lb in
12 mm	2.1 N·m	19 lb in
14 mm	3 N·m	27 lb in
16 mm	4.2 N·m	37 lb in
20 mm	7 N·m	62 lb in
24 mm	10.5 N·m	93 lb in
Nylon Interface Prevailing Torque Fasteners		
6 mm	0.3 N·m	3 lb in
8 mm	0.6 N·m	5 lb in
10 mm	1.1 N·m	10 lb in
12 mm	1.5 N·m	13 lb in
14 mm	2.3 N·m	20 lb in
16 mm	3.4 N·m	30 lb in
20 mm	5.5 N·m	49 lb in
24 mm	8.5 N·m	75 lb in

English Prevailing Torque Fastener Minimum Torque Development

Application	Specification	
	Metric	English
All Metal Prevailing Torque Fasteners		
1/4 in	0.5 N·m	4.5 lb in
5/16 in	0.8 N·m	7.5 lb in
3/8 in	1.3 N·m	11.5 lb in
7/16 in	1.8 N·m	16 lb in
1/2 in	2.3 N·m	20 lb in
9/16 in	3.2 N·m	28 lb in
5/8 in	4 N·m	36 lb in
3/4 in	7 N·m	54 lb in
Nylon Interface Prevailing Torque Fasteners		
1/4 in	0.3 N·m	3 lb in
5/16 in	0.6 N·m	5 lb in
3/8 in	1 N·m	9 lb in
7/16 in	1.3 N·m	12 lb in
1/2 in	1.8 N·m	16 lb in
9/16 in	2.5 N·m	22 lb in
5/8 in	3.4 N·m	30 lb in
3/4 in	5 N·m	45 lb in

&#169© Copyright Chevrolet. All rights reserved

Thread Inserts

General Purpose Thread Repair Kits.

These kits are available commercially.

Repair Procedure

Warning: Refer to Safety Glasses Warning in the Preface section.

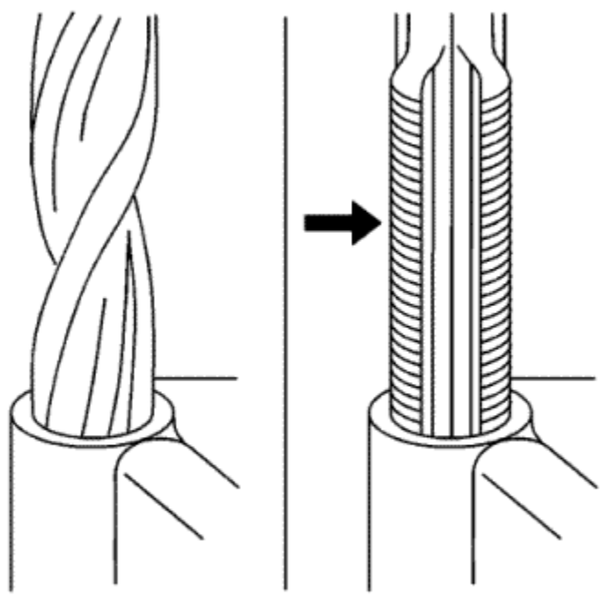

Note: Refer to the thread repair kit manufacturer's instructions regarding the size of the drill and tap to use.

Avoid any buildup of swarf. Back out the tap every few turns and remove the swarf.

1. Determine the size, the pitch, and the depth of the damaged thread. If necessary, adjust the stop collars on the cutting tool and tap to the required depth.
2. Drill out the damaged threads. Clean out any swarf.
3. Lubricate the tap with light engine oil. Tap the hole. Clean the threads.

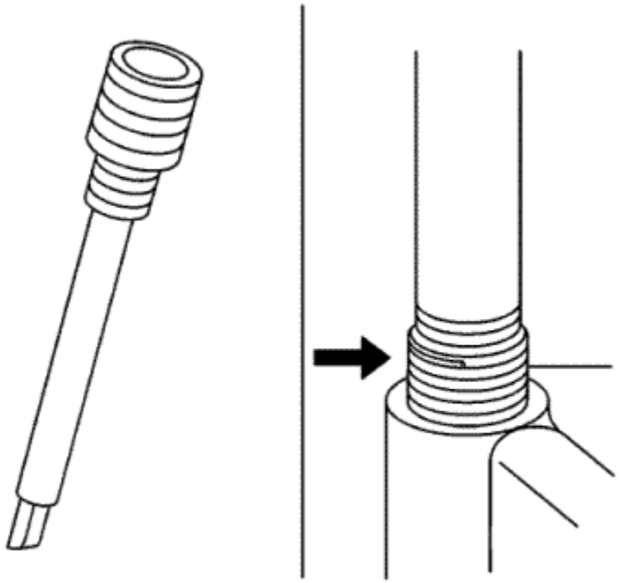

4. Thread the thread insert onto the mandrel of the installer. Engage the tab of the insert onto the end of the mandrel.

   Note: The insert should be flush to one turn below the surface.

5. Lubricate the insert with light engine oil, except when installing in aluminium and install the insert.
6. If the tab of the insert does not break off when backing out the installer, break the tab off with a drift.

© Copyright Chevrolet. All rights reserved

Registered and Non-Registered Trademarks

Listed below are Registered Trademarks (®) or Non-Registered Trademarks (™) which may appear in this service manual.

A
AC®
ACCUTURN®
ACDelco®
Active Fuel Management™
Acuzinc®
Airbank®
Allison®
AMMCO®
AUTOFUSE®
AUTOTRAC®
B
Bendix®
BON-AMI®
Bosch®
Bose®
C
Catapillar®
CAT®
C-Quam®
D
Delco®
Delco Bose®
Delco Electronics®
Delco Freedom®
Delco LOC II®

Delco Moraine®
Delco Remy®
Delco Sound®
Delco Supreme®
Delco Tech®
DELCORE®
Delphi®
DEX-COOL®
DEXOIL®
DEXRON®
DEXSTEER™
DNR®
Dolby®
DR®
Duracell®
Duraguard®
Durastop®
Duramax™
E
Eaton Corporation®
EMD®
ETR®
F
FLO-LITE®
G
General Motors®
GM®
GM Goodwrench Service®
GM Optikleen®
GM Parts™
GM Pass®
GM Ultralite®
GMAC®
Goodwrench®

GTP®
H
Homelink™
HYDRA-MATIC®
I
Illumination®
INSTA-TRAC®
Intune®
L
LOCTITE™
M
MAGNASTEER®
Maxifuse®
Metripack®
Micropack®
Minifuse®
Mr Goodwrench®
N
Northstar®
O
OnStar®
Optikleen®
P
PASS-KEY®
PASS-KEYII®
PASSLOCK™
PK3®
Posidrive®
Pro®
Q
Quad 4®
R
RAINSENSE™
Rapid Fire®

S
ScotchBrite™
Scotchguard™
Signals®
Sikkens™
Soft-Ray®
Solar-Ray®
Stabilitrak®
Sunrayce®
Superlube®
Syclone®
T
Tech 2®
Techline®
Teflon®
Tefzel®
Theft-I®
Theftlock®
Tiltmaster®
TORX®
Transjel®
Transguide®
Twilight Sentinel®
U
Ultralite®
V
Velcro®
W
Weatherpack™

© Copyright Chevrolet. All rights reserved

Lifting and Jacking the Vehicle

Note: The use of a LOW PROFILE LIFT ARMS SYSTEM may be required to avoid unwanted contact with the vehicle's body and structure depending on lifting equipment used. Refer to the manufacture's recommendation for their applications of low profile lift arms system for their lifting equipment.

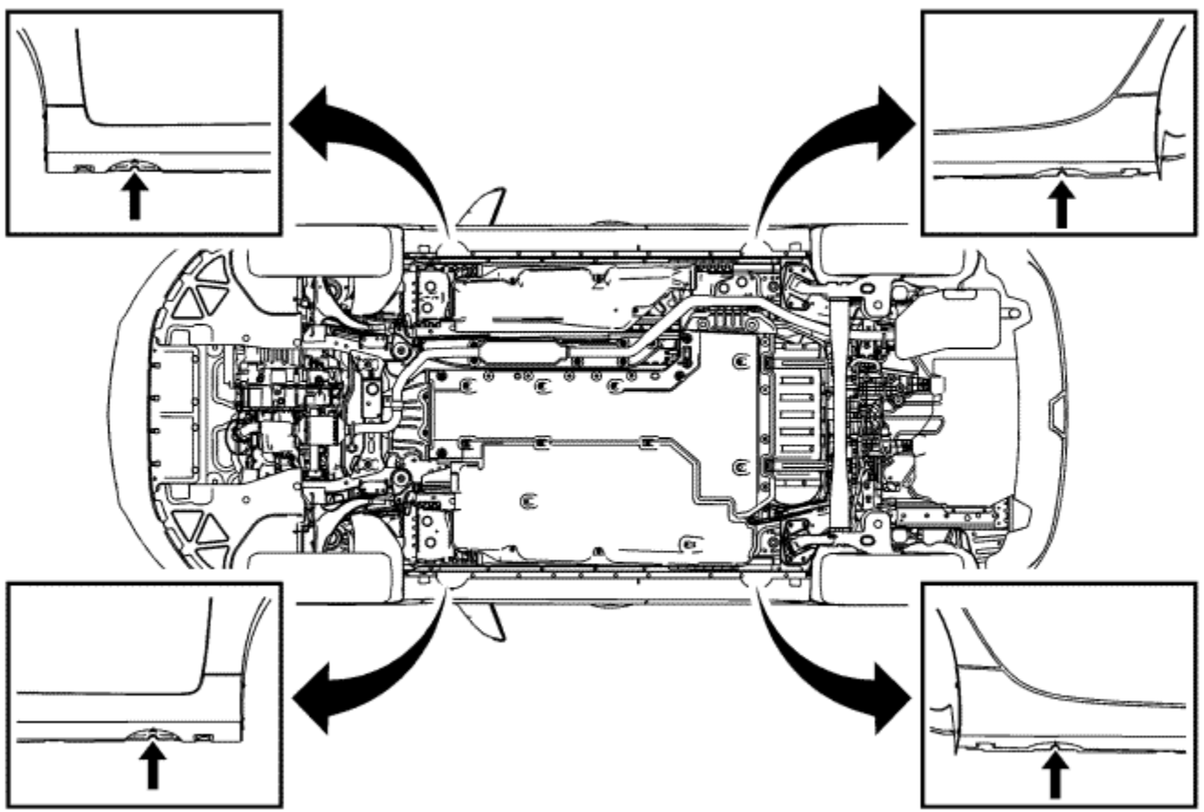

Caution: Lifting the vehicle improperly can damage the vehicle and result in costly repairs not covered by the warranty.

Caution: Perform the following steps before beginning any vehicle lifting or jacking procedure:

- Remove or secure all of the vehicle contents in order to avoid any shifting or any movement that may occur during the vehicle lifting or jacking procedure.
- The lifting equipment or the jacking equipment weight rating must meet or exceed the weight of the vehicle and any vehicle contents.
- The lifting equipment or the jacking equipment must meet the operational standards of the lifting equipment or jacking equipment manufacturer.
- Perform the vehicle lifting or jacking procedure on a clean, hard, dry, level surface.
- Perform the vehicle lifting or jacking procedure only at the identified lift points. DO NOT allow the lifting equipment or jacking equipment to contact any other vehicle components.

Failure to perform the previous steps could result in damage to the lifting equipment or the jacking equipment, the vehicle, and/or the vehicle contents.

Vehicle Lifting - Frame Contact Lift

Danger: To avoid any vehicle damage, serious personal injury or death when major components are removed from the vehicle and the vehicle is supported by a hoist, support the vehicle with jack stands at the opposite end from which the components are being removed and strap the vehicle to the hoist.

Note: The hoist pads must not contact the rocker panel mouldings or the underbody air deflectors. Additional clearance may be required for the lifting points.

Front Lift Pads

When lifting the vehicle with a frame-contact lift, place the front lift pads on the rocker outer panel weld flange, as shown

Rear Lift Pads

When lifting the vehicle with a frame-contact lift, place the rear lift pads on the rocker outer panel weld flange, as shown.

Vehicle Lifting - Service Jack

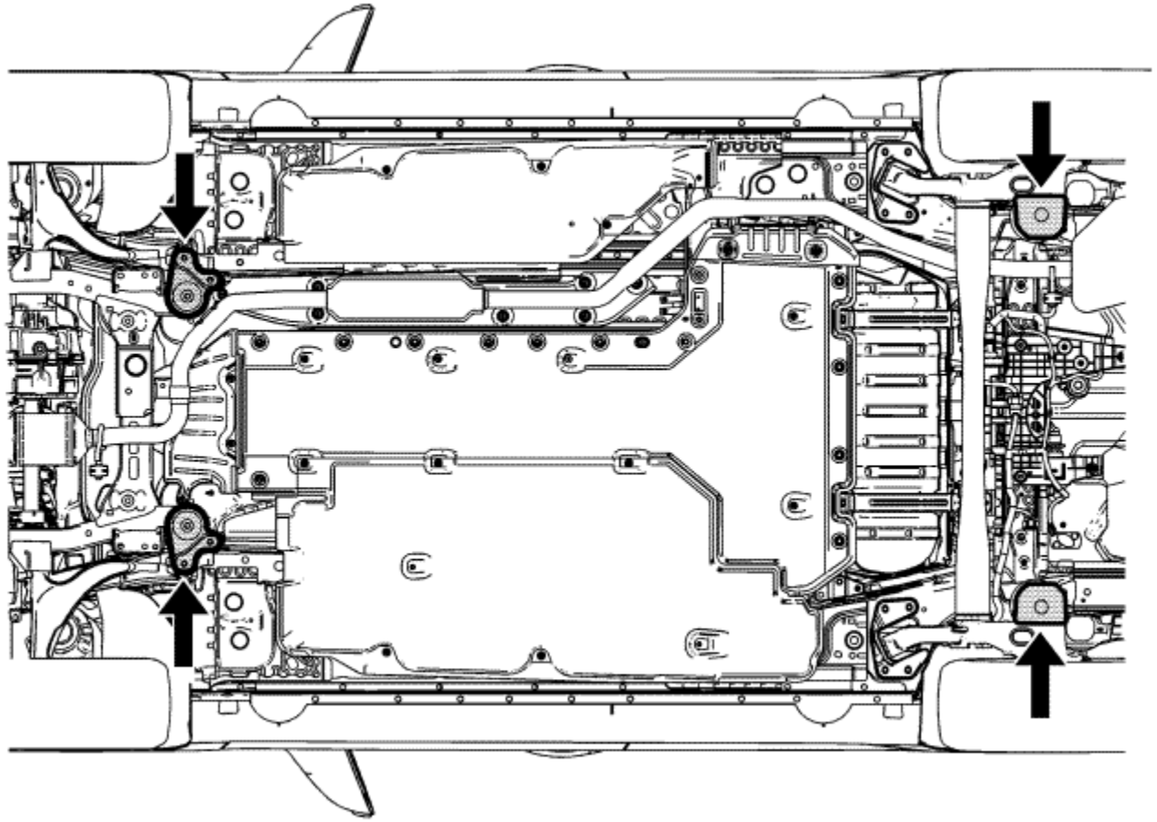

Danger: Do not use a service jack in locations other than those specified to lift this vehicle. Lifting the vehicle with a jack in other locations could cause the vehicle to slip off the jack and roll; this could cause injury or death.

Danger: To avoid any vehicle damage, serious personal injury or death, always use the jackstands to support the vehicle when lifting the vehicle with a jack.

Caution: Lifting the vehicle improperly can damage the vehicle and result in costly repairs not covered by the warranty.

Caution: When you are jacking the vehicle at the front locations, be certain that the jack or the jack lift pad does not contact the front fascia, front fascia air dam, rocker moulding, or the front wings. If such contact occurs, vehicle damage may result. When jacking at selected front locations additional clearance may be required for the jacking points.

Note: It may be necessary to put ramps under the Volt's front tyres in order to provide necessary clearance for certain service jacks.

Front Service Jack Location

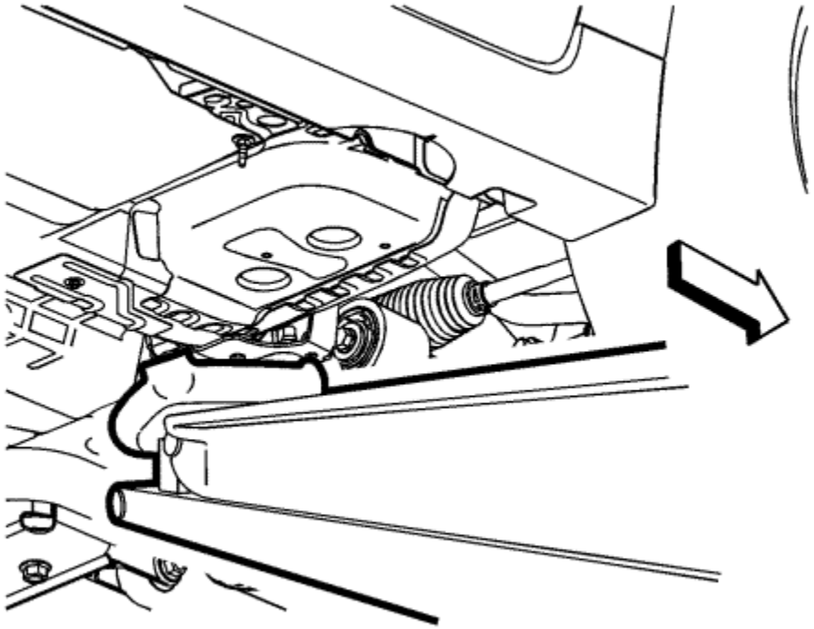

When lifting the vehicle with a service jack, place the lift pad on the front cradle rear mount bracket, as shown.

Rear Service Jack Location

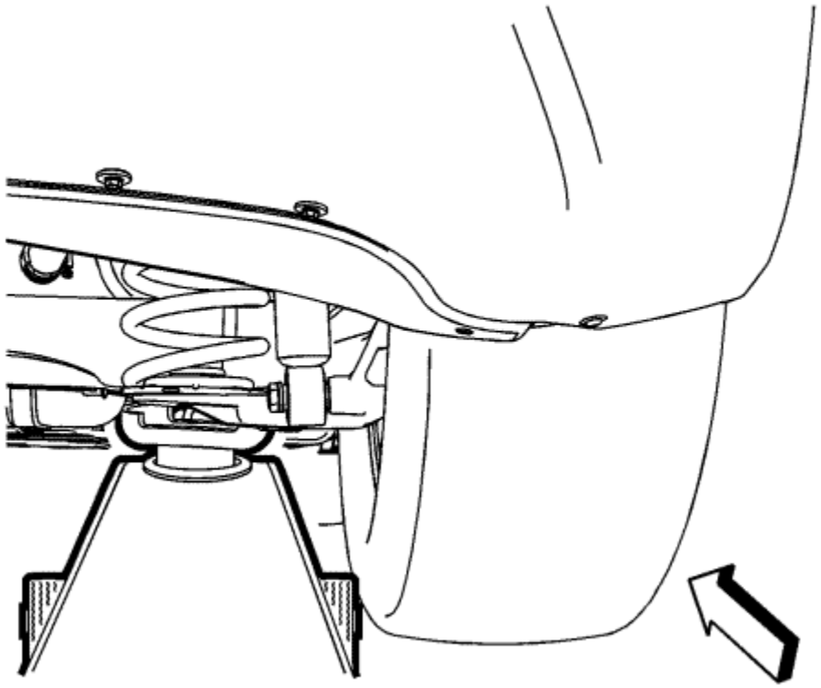

When lifting the vehicle with a service jack, place the lift pad on the rear spring support, as shown.

&#169© Copyright Chevrolet. All rights reserved

Customer Concern Verification Sheets

The GM Customer Concern Verification Sheets have been designed to improve communications between the service customer and the technician. The more clearly the technician understands the concern and its symptoms, the more likely the concern will be fixed right the first time.

The GM-wide Customer Concern Verification Sheets are available in GM GlobalConnect. The Customer Concern Verification Sheets may be printed and reproduced locally.

© Copyright Chevrolet. All rights reserved

Special Tools Ordering Information

The special service tools shown in this service manual that have product numbers beginning with J, SA or BT are available for worldwide distribution from:

OE Tool and Equipment Group
Kent-Moore
28635 Mound Road
Warren, MI, U.S.A 48092-3499

Phone: 1-800-345-2233 or 586-574-2332

Monday through Friday

8:00 am-7:00 pm Eastern Standard Time

Fax: 1-800-578-7375 or 586-578-7321

The TECH 2 scan tool and accessories can be purchased through:

Dealer Equipment and Services
5775 Enterprise Dr.
Warren, MI, U.S.A 48092-3463

Phone: 1-800-GM-TOOLS or 586-574-2332

Monday through Friday

8:00 am-6:00 pm EST

Fax: 1-586-578-7205

© Copyright Chevrolet. All rights reserved

Air/Wind Noise

Warning: Refer to Assistant Driving Warning in the Preface section.

To analyse a reported wind noise condition, test drive the vehicle to determine the origin of the noise.

Choose a regular route with smooth and straight streets that run in all 4 directions: North, South, East, and West. The area should have little traffic or little noise in order to eliminate interference with the test.

Note: Often there is one primary leak source and one or more secondary leaks that contribute to the noise condition. Repairing only one of the contributing leak sources may not completely repair the total condition but only reduce the condition.

Drive the vehicle at the speed in which the noise was noticed, or until the noise is heard. Maintain safe and legal speeds.

Many of the water leak diagnosis tests are also used for the wind noise diagnosis.

Most wind noise is caused either by leaking seals or by misaligned body surfaces. You can diagnose the following types of windnoise.

- Wind whistle
- Wind roar
- Wind rush

When moving at motorway speeds, air pressure inside the vehicle becomes greater than the air pressure outside. When a leak occurs, the escaping air causes a hiss or a whistle.

Wind roar occurs when air passes over or through an opening between the 2 body surfaces. To correct the condition, adjust the alignment to the body surfaces.

Wind rush occurs when air presses over the vehicle's body, and is related to the aerodynamics of the vehicle. Wind whistle and wind roar are repairable. Rule out wind whistle and wind roar before concluding that the wind noise is due to wind rush.

Use the following inspections in order to aid in diagnosing wind whistle or wind roar:

1. Note the details for wind noise:
   - The perceived location
   - The location where the noise is loudest
   - When the noise occurs

- The vehicle speed
- The interior fan speed
- The position of the windows
- What the noise sounds like

2. Inspect the vehicle for the possible cause of the wind noise.
3. Test drive the vehicle and determine if the wind noise is external or internal.
4. Perform a visual inspection of the following components:
   - Loose fasteners
   - Torn weatherstrips
   - Broken weld joints
   - Sealer and/or adhesive skips

&#169© Copyright Chevrolet. All rights reserved

Tracing Powder or Chalk Test

Clean the weatherstrips and the contact surfaces with cleaning solvent.

1. Apply powder or chalk in an unbroken line to the contact surface of the weatherstrip surrounding the perimeter of the suspected areas.
2. Close the panel completely without slamming the panel. Closing the panel completely presses the weatherstrip firmly against the mating surface.
3. Inspect the applied line on the weatherstrip. The applied line is marred where contact is good. A corresponding imprint is on the mating surfaces.
4. Gaps or irregularities in the powder or the chalk line on the mating surfaces indicate the areas with a poor seal.

© Copyright Chevrolet. All rights reserved

Air Pressure Test

1. Mask off both the pressure relief valves.
2. Close all the windows.
3. Turn the vehicles ventilation fan to the on position, with the selector on high speed and in the defrost mode.
4. Unlock and close the doors.
5. Listen for escaping air along the door and the window seals with a stethoscope or a length of heater hose.

© Copyright Chevrolet. All rights reserved

Soap Suds or Bubble Test

1. Mask off the pressure relief valves.
2. Close all the windows and the doors.
3. Turn the vehicles ventilation fan to the on position, with the selector on high speed and in the defrost mode.
4. Unlock and close the doors.
5. Apply the soap solution to the potential leak areas.
6. Look for bubbles revealing escaping air.

© Copyright Chevrolet. All rights reserved

Approximate Fluid Capacities

The following approximate capacities are given in US English and metric conversions. Refer to Fluid and Lubricant Recommendations for more information. All capacities are approximate. When adding, be sure to fill to the approximate level as recommended in this manual. Recheck fluid level after filling.

Application	Specification	
	Metric	US English
Cooling Systems		
Engine Cooling	6.3 L	6.7 qt
High Voltage Battery Pack Cooling	6.0 L	6.3 qt
Power Electronics Cooling	3.0 L	3.2 qt
Engine Oil with Filter	3.5 L	3.7 qt
Fuel Tank	35.2 L	9.3 gal
Electric Drive Unit Fluid	8.45 L	8.93 qt

© Copyright Chevrolet. All rights reserved

Fluid and Lubricant Recommendations

Usage	Fluid/Lubricant
Engine Oil	The engine requires engine oil approved to the dexos™ specification. Oils meeting this specification can be identified with the dexos™ certification mark. Look for and use only an engine oil that displays the dexos™ certification mark of the proper viscosity grade. SAE 5W-30 is the best viscosity grade for the vehicle. Do not use other viscosity oils such as SAE10W-30, 10W-40, or 20W-50.
Engine Coolant	50/50 mixture of clean, drinkable water and use only DEX-COOL Coolant.
High Voltage Battery Cooling System	Always use the pre-mixed 50/50 mixture of deionised water and DEX-COOL Coolant available at your dealer.
Power Electronics Cooling System	Always use the pre-mixed 50/50 mixture of deionised water and DEX-COOL Coolant available at your dealer.
Hydraulic Brake System	DOT 3 Hydraulic Brake Fluid GM P/N 88863461 (Canadian P/N 88863462)
Windscreen Washer	Optikleen® Washer Solvent
Parking Brake Cable Guides	Chassis Lubricant GM P/N 12377985 (Canadian P/N 88901242) or lubricant meeting requirements of NLGI #2, Category LB or GC-LB
Electric Drive Unit	DEXRON®-VI Automatic Transmission Fluid
Key Lock Cylinders	Multi-Purpose Lubricant, Superlube GM P/N 12346241 (Canadian P/N 10953474)
Bonnet Latch Assembly, Secondary Latch, Pivots, Spring Anchor, and Release Pawl	Lubriplate Lubricant Aerosol GM P/N 89021668 (Canadian P/N 89021674) or lubricant meeting requirements of NLGI #2, Category LB or GC-LB
Bonnet, Hatch, and Rear Folding Seat Hinges	Multi-Purpose Lubricant, Superlube GM P/N 12346241 (Canadian P/N 10953474)
Weatherstrip Conditioning	Weatherstrip Lubricant GM P/N 3634770 (Canadian P/N 10953518) or Dielectric Silicone Grease GM P/N 12345579 (Canadian P/N 992887)

© Copyright Chevrolet. All rights reserved

Maintenance Items

Part	GM Part Number	ACDelco Part Number
Engine Air Cleaner/Filter	20871244	A3148C
Engine Oil Filter	55352643	—
Spark Plugs	55564962	—
Wiper Blades		
Driver Side - 65.0 cm (25.6 in)	22742323	—
Passenger Side - 65.0 cm (25.6 in)	22742324	—

© Copyright Chevrolet. All rights reserved

GM Oil Life System Resetting

This vehicle has a computer system that indicates when to change the engine oil and filter. This is based on a combination of factors which includes engine revs and engine temperature, and miles driven. Based on driving conditions, the mileage at which an oil change is indicated may vary considerably. For the oil life system to work properly, the system must be reset every time the oil is changed.

When the system has calculated that oil life has been diminished, it indicates that an oil change is necessary. A CHANGE ENGINE OIL SOON message comes on. Change the oil as soon as possible within the next 1 000 km (600 miles). It is possible that, if driving under the best conditions, the oil life system might indicate that an oil change is not necessary for up to two years. The engine oil and filter must be changed at least once every two years and, at this time, the system must be reset. Your dealer has trained service personnel who will perform this work using genuine parts and reset the system. It is also important to check the oil regularly over the course of an oil drain interval and keep it at the proper level.

If the system is ever reset accidentally, the oil must be changed at 5 000 km (3,000 miles) since the last oil change. Remember to reset the oil life system whenever the oil is changed.

How to Reset the Engine Oil Life System

Reset the system whenever the engine oil change is changed so that the system can calculate the next engine oil change. To reset the system:

1. Use the SELECT knob to select OIL LIFE on the DIC menu.
2. Press SELECT to start the OIL LIFE reset procedure.
3. The DIC menu will display "Are you sure that you want to reset?" Use SELECT to choose YES to reset oil life or NO to exit and return to the previous menu.
4. If YES is selected, the DIC menu will display RESET OIL LIFE for a short time and then 100% OIL LIFE will be display when OIL LIFE is successfully reset.

If the Change Engine Oil Soon message comes back on when the vehicle is started, the engine oil life system has not reset. Repeat the procedure.

© Copyright Chevrolet. All rights reserved

Tyre and Wheel Runout Specifications

Application	Specification	
	Metric	English
Tyre and Wheel Assembly - Lateral and Radial		
Off-Vehicle	1.27 mm	0.050 in
On-Vehicle	1.52 mm	0.060 in
Wheel, Aluminium		
Lateral	0.762 mm	0.030 in
Radial	0.762 mm	0.030 in
Wheel, Steel		
Lateral	1.143 mm	0.045 in
Radial	1.015 mm	0.040 in
Wheel Hub/Axle Flange - Guideline	0.132 mm	0.0052 in
Wheel Stud - Guideline	0.25 mm	0.010 in

© Copyright Chevrolet. All rights reserved

Vibration Analysis - Hub and/or Axle Input

Test Description

The numbers below refer to the step numbers on the diagnostic table:

1. This test will determine the effect of turning input on the vibration.
5. This test will determine the effect of an initial heavy torque load on the vibration.
6. Damaged or worn wheel drive shafts may cause a noise or vibration that may be transferred into the passenger compartment.
7. Damaged or worn wheel bearings may cause a noise or vibration that may be transferred into the passenger compartment.
8. Damaged or worn suspension components may cause a noise or vibration that may be transferred into the passenger compartment.
9. Damaged or worn powertrain mounts and/or exhaust mounts may cause a noise or vibration that may be transferred into the passenger compartment.
10. Incorrect trim height may cause binding and/or interference between components that may produce a vibration.

Step	Action	Yes	No
Warning: Refer to Road Test Warning in the Preface section.			
1	1. Operate the vehicle at the speed of the vibration concern. 2. While maintaining the concern speed, drive the vehicle through slow, sweeping turns - first in one direction, then in the other direction. 3. Observe the vehicle for changes in the vibration disturbance. 4. Select a smooth, level surface, such as an empty parking lot or a remote road. 5. While maintaining the vehicle at the concern speed if possible, drive the vehicle through sharp turns; 360 degrees - first in one direction, then in the other direction. 6. Observe the vehicle for changes in the vibration disturbance. Did the characteristics of the vibration change significantly--become worse or go away--during these steps?	Go to Step 2	Go to Step 5
2	Did you hear a clicking noise and/or feel a shudder during these steps?	Go to	

		Step 6	Go to Step 3
3	Did you hear a growling noise during these steps?	Go to Step 7	Go to Step 4
4	Did you hear a popping noise during these steps?	Go to Step 8	Go to Step 11
5	1. With the vehicle at a stand-still, apply the regular brake and place the transmission in the lowest forward gear. **Note:** Do not accelerate to the point of causing the drive wheels to squeal, slip or hop--this would obscure the results of the test. 2. Release the regular brakes and accelerate aggressively to 32 km/h (20 mph). 3. Observe the vehicle for changes in the vibration disturbance. Did you feel a shudder or shaking during these steps?	Go to Step 6	Go to Vibration Diagnostic Aids - Vibration Intermittent or Not Duplicated
6	1. Inspect the wheel drive shafts, if equipped, for damage, abnormal and/or excessive wear. 2. If the inspection indicated that a wheel drive shaft is damaged, abnormally and/or excessively worn, replace the shaft. Did you find and correct a condition?	Go to Step 11	Go to Step 8
7	1. Inspect the wheel bearings for wear and/or damage. 2. Replace any of the wheel bearings found to be worn and/or damaged. Did you find and correct a condition?	Go to Step 11	Go to Vibration Diagnostic Aids - Vibration Intermittent or Not Duplicated
8	1. Inspect the following suspension components for wear, damage, looseness and/or possible contact with other vehicle components: • Struts/shock absorbers • Springs • Bushes • Insulators 2. Replace any of the suspension components found to be worn, damaged, loose and/or contacting other vehicle components. Did you find and correct a condition?	Go to Step 11	Go to Step 9
	1. Inspect the powertrain mounts--engine, transmission, transfer case, and direct-mount differential, if equipped--and any powertrain braces for the following conditions: • Loose and/or missing fasteners • Improper alignment Cracked, dry-rotted, and/or oil-soaked insulators		

9	• • Twisted, broken, torn, and/or collapsed insulators • Bent, twisted, and/or deformed brackets 2. Replace powertrain mounts as necessary. 3. Inspect the exhaust system components for the following: • Loose and/or missing fasteners - Heat Shields - Joints and/or couplings: - Nuts, bolts, studs, clamps, straps - Bracket and/or insulator mounting • Inadequate clearance to body and/or chassis components Inspect with the exhaust system both COLD and HOT; in NEUTRAL, FORWARD and REVERSE gears • Improper alignment • Disconnected and/or missing insulators • Cracked, dry-rotted, and/or oil-soaked insulators • Stretched, twisted, broken, torn, and/or collapsed insulators • Bent, twisted, cracked, and/or deformed brackets 4. Repair, replace, and/or realign exhaust system components as necessary. Did you find and correct a condition?	Go to Step 11	Go to Step 10
10	Inspect the vehicle trim height and adjust as necessary. Refer to Trim Height Inspection . Did you find and correct a condition?	Go to Step 11	Go to Vibration Diagnostic Aids - Vibration Intermittent or Not Duplicated
11	Install or connect any components that were removed or disconnected during diagnosis. Is the vibration still present?	Go to Step 1	System OK

&#169© Copyright Chevrolet. All rights reserved

Vibration Analysis - Engine

Test Description

The numbers below refer to the step numbers on the diagnostic table.

1. If powertrain related DTCs are present, there may be a powertrain performance condition present which could be a contributing cause to the customer's concern.
4. Making comparisons of the customer's vehicle with an equally equipped, same model year and type, KNOWN GOOD vehicle will help determine if certain disturbances may be characteristic of a vehicle design.

Step	Action	Yes	No
Warning: Refer to Work Stall Test Warning in the Preface section.			
1	Using a scan tool, determine if any DTCs are set. Were any DTCs set?	Go to Diagnostic Starting Point - Vehicle	Go to Step 2
2	1. Block the front wheels. 2. Apply BOTH the service brakes and the handbrake. 3. Install a scan tool. 4. Install a vibration analyser, if available. 5. Start the engine. 6. Place the transmission in NEUTRAL or PARK. 7. Slowly increase the engine RPM to the level at which the disturbance is most noticeable. 8. Record the engine RPM obtained on the scan tool and the most dominant frequency reading if obtained on a vibration analyser. 9. Place the transmission in DRIVE. 10. Slowly increase the engine RPM to the level at which the disturbance is most noticeable. 11. Record the engine RPM obtained on the scan tool and the most dominant frequency reading if obtained on a vibration analyser. 12. If no frequency data was obtained, or if a vibration analyzer is not available, place the transmission into REVERSE, then repeat steps 8 and 9. Reverse-loading of the powertrain may increase or change the characteristics of the vibration.		Go to Vibration Diagnostic Aids - Vibration Intermittent or

	Were you able to duplicate the customer's concern?	Go to Step 3	Not Duplicated
3	Did a vibration analyser, detect a dominant frequency, or was a significant vibration present?	Go to Vibration Analysis - Engine/Accessory Isolation	Go to Step 4
4	Compare the test results of the customer's vehicle to the results of the same tests run, at the same engine RPM, on an equally-equipped, same model year and type, KNOWN GOOD vehicle. 1. Install a scan tool into the known good vehicle. 2. Install a vibration analyzer, if available, into the known good vehicle; place the sensor in exactly the same location as it was placed in the customer's vehicle. 3. Block the front wheels. 4. Apply BOTH the service brakes and the handbrake. 5. Start the engine. 6. Place the transmission in NEUTRAL or PARK. 7. Slowly increase the engine RPM to the level at which the disturbance was most noticeable in the customer's vehicle. 8. Record the engine RPM obtained on the scan tool and the most dominant frequency reading if obtained on a vibration analyser. 9. Place the transmission in DRIVE. 10. Slowly increase the engine RPM to the level at which the disturbance was most noticeable in the customer's vehicle. 11. Record the engine RPM obtained on the scan tool and the most dominant frequency reading if obtained on a vibration analyser. 12. If no frequency data was obtained, or if a vibration analyser, is not available, place the transmission into REVERSE, then repeat steps 10 and 11. Reverse-loading of the powertrain may increase or change the characteristics of the vibration. Did both of the vehicles exhibit the same characteristics?	Go to Vibration Diagnostic Aids - Vibration Intermittent or Not Duplicated	Go to Vibration Analysis - Engine/Accessory Isolation

© Copyright Chevrolet. All rights reserved

Engine Order Classification

Engine First Order Classification

1. Convert the engine speed in revolutions per minute (RPM), recorded during duplication of the disturbance into Hertz , revolutions per second (RPS), by dividing the RPM by 60 seconds. Refer to the following example:

   1,200 RPM divided by 60 = 20 Hz (or RPS)

2. Compare the dominant frequency in Hz, recorded during duplication of the disturbance with the engine speed just converted into Hz, to determine if they are related.
3. If the dominant frequency in Hz, recorded during duplication of the disturbance and the engine speed, converted into Hz, ARE related, then an engine FIRST ORDER related disturbance is present. Engine first order disturbances are usually related to an imbalanced component. Refer to the Engine Order Related Disturbances table.
4. If the dominant frequency in Hz, recorded during duplication of the disturbance and the engine speed, converted into Hz, are NOT related, then determine if the disturbance is related to the engine's firing frequency. Proceed to Engine Firing Frequency Classification.

Engine Firing Frequency Classification

Engine firing frequency is a term used to describe the number of firing pulses (one firing pulse = one cylinder firing) that occur during ONE complete revolution of the crankshaft, multiplied by the number of crankshaft revolutions per second, Hz.

1. Calculate the engine firing frequency.
   - To determine the firing frequency of a 4-stroke engine during ONE complete revolution of the crankshaft, multiply the engine speed, converted into Hz, by HALF of the total number of cylinders in the engine.
   - For example: The engine speed, converted into Hz, was 20 Hz; if the vehicle was equipped with a V8 engine, 4 of the 8 cylinders would actually fire during ONE complete revolution of the crankshaft.
     - Multiply the converted engine speed (20 Hz) by 4 cylinders firing.
     - 20 Hz X 4 = 80 Hz
     - The engine firing frequency for a V8 engine at the original engine speed of 1,200 RPM, recorded during duplication of the disturbance, would be 80 Hz.
     - In like manner, a 6-cylinder engine would have a firing frequency of 60 Hz at the same engine speed of 1,200 RPM.
     - 20 Hz X 3 = 60 Hz
2. Compare the dominant frequency in Hz, recorded during duplication of the disturbance with the engine firing frequency in Hz, just calculated, to determine if they are related.
3. If the dominant frequency in Hz, recorded during duplication of the disturbance and the engine firing frequency in Hz, just calculated ARE related, then an engine

FIRING FREQUENCY related disturbance is present. Engine firing frequency disturbances are usually related to improper isolation of a component. Refer to the Engine Order Related Disturbances table.

4. If the dominant frequency in Hz, recorded during duplication of the disturbance and the engine firing frequency in Hz, just calculated are NOT related, then determine if the disturbance is related to another engine order classification. Proceed to Other Engine Order Classification.

Other Engine Order Classification

1. Multiply the engine speed, converted into Hz, recorded during duplication of the disturbance by different possible order-numbers, other than 1 (first order) or the number used to determine the firing frequency of the engine.
2. Compare the dominant frequency in Hz, recorded during duplication of the disturbance with the other possible engine orders just calculated, to determine if they are related.
3. If the dominant frequency in Hz, recorded during duplication of the disturbance and one of the other engine order frequencies in Hz, just calculated ARE related, then an engine related disturbance of that order is present. If an engine related disturbance is present that is NOT related to first order or firing frequency, then it could be related to an engine driven accessory system. Proceed to Engine Driven Accessories Related to Engine Order.

Engine Driven Accessories Related to Engine Order

Engine driven accessory systems can be related to specific engine orders depending upon the relationship of the accessory pulley diameter to the crankshaft pulley diameter. For example:

- If the crankshaft pulley measured 20 cm (8 in) in diameter and one of the engine driven accessory pulleys measured 10 cm (4 in) in diameter, then that accessory pulley would rotate 2 times for every one rotation of the crankshaft pulley. If that accessory system was not isolated properly, or was not operating properly, it would be identifiable as a 2nd order engine related disturbance.
- In like manner, if an engine driven accessory pulley measured 5 cm (2 in) in diameter, then that accessory pulley would rotate 4 times for every one rotation of the crankshaft pulley. If that accessory system was not isolated properly, or was not operating properly, it would be identifiable as a 4th order engine related disturbance.

Engine driven accessories that contribute to, are excited by, or are the sole cause of a disturbance are usually doing so because of improper isolation that causes a transfer path into the passenger compartment or to another major component of the vehicle body.

Using the *EL-38792-VS* Vibrate Software , accurately measuring the diameters of the accessory pulleys and the crankshaft pulley, and performing the appropriate diagnostic procedures completely will lead to the specific accessory system which is either contributing to or causing the customer's concern.

Engine Order Related Disturbances

Engine Order	Engine Arrangement						
	L4 W/O Balance Shaft	L4 With Balance Shaft	L5	L6	60 Degree V6	90 Degree V6 With Balance Shaft	90 Degree V8
½ Order Torque	Abnormal – Likely Single Cylinder Misfire	Abnormal – Likely Single Cylinder Misfire	Abnormal – Likely Single Cylinder	Abnormal – Likely Single Cylinder	Abnormal - Likely Single Cylinder Misfire and/or	Abnormal - Likely Single Cylinder Misfire and/or	Abnormal – Likely Single Cylinder

Sensitive			Misfire	Misfire	EGR/Fuel Variance	EGR/Fuel Variance	Misfire
1st Order	Abnormal – Likely Component Imbalance	Abnormal – Likely Component Imbalance	Abnormal – Likely Component Imbalance	Abnormal – Likely Component Imbalance	Abnormal – Likely Component Imbalance	Abnormal – Likely Component Imbalance	Abnormal – Likely Component Imbalance
1½ Order Torque Sensitive	Possible Engine Driven Accessory Related	Possible Engine Driven Accessory Related	Possible Engine Driven Accessory Related	Possible Engine Driven Accessory Related	Abnormal - Likely Bank to Bank EGR/Fuel Variance Possible Engine Driven Accessory Related	Abnormal - Likely Bank to Bank EGR/Fuel Variance Possible Engine Driven Accessory Related	Possible Engine Driven Accessory Related
2nd Order Non Torque Sensitive	Characteristic of Engine Arrangement – Possible Powertrain Isolation Related	Possible Engine Driven Accessory Related	Possible Engine Driven Accessory Related	Possible Engine Driven Accessory Related	Characteristic of Engine Arrangement – Possible Powertrain Isolation Related	Characteristic of Engine Arrangement – Possible Powertrain Isolation Related	Possible Engine Driven Accessory Related
2nd Order Torque Sensitive	Characteristic – ENGINE FIRING FREQUENCY – Possible Powertrain Isolation Related Possible Engine Driven Accessory Related	Characteristic – ENGINE FIRING FREQUENCY – Possible Powertrain Isolation Related Possible Engine Driven Accessory Related	Possible Engine Driven Accessory Related	Possible Engine Driven Accessory Related	Possible Engine Driven Accessory Related	Possible Engine Driven Accessory Related	Abnormal - Likely Bank to Bank EGR/Fuel Variance Possible Engine Driven Accessory Related
2½ Order Torque Sensitive	Possible Engine Driven Accessory Related	Possible Engine Driven Accessory Related	Characteristic – ENGINE FIRING FREQUENCY – Possible Powertrain Isolation Related Possible Engine Driven Accessory Related	Possible Engine Driven Accessory Related	Possible Engine Driven Accessory Related	Possible Engine Driven Accessory Related	Possible Engine Driven Accessory Related
3rd Order	Possible Engine Driven Accessory	Possible Engine Driven Accessory	Possible Engine Driven Accessory	Characteristic – ENGINE FIRING FREQUENCY – Possible Powertrain	Characteristic – ENGINE FIRING FREQUENCY – Possible Powertrain Isolation Related	Characteristic – ENGINE FIRING FREQUENCY – Possible Powertrain Isolation Related	Possible Engine Driven Accessory

Torque Sensitive	Related	Related	Related	Isolation Related			Related
				Possible Engine Driven Accessory Related	Possible Engine Driven Accessory Related	Possible Engine Driven Accessory Related	
4th Order Torque Sensitive	Characteristic – Minimal Amount – of Engine Arrangement – Possible Powertrain Isolation Related	Characteristic – Minimal Amount – of Engine Arrangement – Possible Powertrain Isolation Related	Possible Engine Driven Accessory Related	Possible Engine Driven Accessory Related	Possible Engine Driven Accessory Related	Possible Engine Driven Accessory Related	Characteristic – ENGINE FIRING FREQUENCY – Possible Powertrain Isolation Related
	Possible Engine Driven Accessory Related	Possible Engine Driven Accessory Related					Possible Engine Driven Accessory Related

&#169© Copyright Chevrolet. All rights reserved

Vibration Analysis - Engine/Accessory Isolation

Test Description

The numbers below refer to the step numbers on the diagnostic table.

5. A loose, damaged, misaligned, or defective powertrain insulator and/or bracket may create a transfer path into the passenger compartment.
6. A loose, damaged, misaligned, or defective exhaust system insulator and/or bracket may create a transfer path into the passenger compartment.
7. Incorrectly seated and/or aligned powertrain components and/or exhaust system components may create a transfer path into the passenger compartment.

   When loosening powertrain mounts in order to re-bed the powertrain observe the following:

   Do not loosen the mount bracket-to-engine bolts/nuts, do not loosen the mount bracket-to-vehicle frame bolts/nuts if mount brackets are used.

   Loosen the mount-to-mount bracket bolts/nuts if mount brackets are used, or loosen the mount-to-slotted holes in vehicle frame bolts/nuts if a direct-mount design is used.
8. Non-rotating engine driven accessory component systems can no longer produce a unique disturbance.
9. Non-rotating engine driven accessory components can no longer produce a unique disturbance. If a disturbance is still present, but the characteristics have been altered, it is possible that these component systems are acting as a transfer path for engine firing frequency or a first order engine disturbance.

   If a disturbance is still present, but the characteristics have NOT been altered, it is NOT likely that these component systems are acting as a transfer path for engine firing frequency or a first order engine disturbance.
10. If the mark placed on the face of an engine driven accessory pulley seems to stand still while running this test, then that accessory system is either responding to an existing frequency, such as engine firing pulses, or creating a disturbance.
11. A loose, damaged, misaligned, or defective engine driven accessory system insulator and/or bracket may create a transfer path into the passenger compartment.
12. Removing the engine driven accessory and bracket, or brackets from the engine allows a thorough inspection to determine if any conditions are present that may create a transfer path into the passenger compartment.

Step	Action	Yes	No

Warning: Refer to Work Stall Test Warning in the Preface section.

1	Were you sent here from the Vibration Analysis - Engine table?	Go to Step 2	Go to Vibration Analysis - Engine
2	Is a vibration analyser available?	Go to Step 3	Go to Step 5
3	1. Using the engine RPM and frequency data recorded for the customer's vehicle, determine the order of engine rotation to which the disturbance is related. 2. Determine the possible causes of the disturbance as it relates to a specific order of engine rotation. Refer to Engine Order Classification . Does the Engine Order Classification table indicate that the disturbance is of the same order as the engine firing frequency?	Go to Step 5	Go to Step 4
4	Does the Engine Order Classification table indicate that the disturbance is likely related to engine driven accessories?	Go to Step 8	Go to Step 5
5	Inspect the powertrain mounts--engine, transmission, transfer case, and direct-mount drive shaft, if equipped--and any powertrain braces for the following conditions: • Loose and/or missing fasteners • Improper alignment • Cracked, dry-rotted, and/or oil-soaked insulators • Twisted, broken, torn, and/or collapsed insulators • Bent, twisted, and/or deformed brackets Realign or replace powertrain mounts as indicated by the inspection. Did you find and correct a condition?	Go to Step 13	Go to Step 6
6	Inspect the exhaust system components for the following: • Loose and/or missing fasteners - Heat Shields - Joints and/or couplings: Nuts, bolts, studs, clamps, straps - Bracket and/or insulator mounting • Inadequate clearance to body and/or chassis components Inspect with the exhaust system both COLD and HOT; in NEUTRAL, FORWARD and REVERSE gears • Improper alignment • Disconnected and/or missing insulators		

	• Cracked, dry-rotted, and/or oil-soaked insulators • Stretched, twisted, broken, torn, and/or collapsed insulators • Bent, twisted, cracked, and/or deformed brackets Repair, replace, and/or realign exhaust system components as indicated by the inspection. Did you find and correct a condition?	Go to Step 13	Go to Step 7
7	Perform the Powertrain Mount Balance Procedure if available or perform the following procedure to re-bed the powertrain: 1. Loosen, but do not remove, all powertrain mounts and exhaust system hangers. 2. Ensure that the exhaust flexible coupling, if equipped, moves freely. 3. Start the engine. 4. Settle the powertrain by shifting the transmission from DRIVE to REVERSE. 5. Place the transmission into NEUTRAL. 6. Turn OFF the ignition. 7. Tighten all of the loosened fasteners with the powertrain in a relaxed position. Did you complete the operation?	Go to Step 13	--
8	**Caution:** Do not run the engine for longer than 60 seconds with the accessory drive belt, or belts removed, or overheating and/or damage may result. 1. Remove the engine accessory drive belt, or belts. 2. Block the front wheels. 3. Apply BOTH the service brakes and the handbrake. 4. With the scan tool still installed, start the engine. 5. Place the transmission in NEUTRAL or PARK. 6. Increase the engine RPM to the level recorded during duplication of the disturbance. 7. Allow the engine to idle, then place the transmission in DRIVE. 8. Increase the engine RPM to the level recorded during duplication of the disturbance. 9. Turn OFF the ignition. 10. Install the engine accessory drive belt, or belts. Was the disturbance significantly reduced or eliminated?	Go to Step 10	Go to Step 9
9	Were the characteristics of the disturbance altered but still present?	Go to Step 11	Go to Step 15
	1. Mark the face of the suspected accessory pulleys, including any related idler pulleys, near the outer edge with a paint mark. 2. Install an inductive pickup timing light,if available, to the vibration analyser. 3. Block the front wheels. 4. Apply BOTH the service brakes and the handbrake.		

10	5. With the scan tool and the vibration analyser, still installed, start the engine. 6. Enter the recorded frequency of the disturbance as the initial frequency for strobe operation. 7. Have an assistant place the transmission in NEUTRAL or PARK. 8. Slowly increase the engine RPM to the level recorded during duplication of the disturbance, then maintain that speed. 9. Using the inductive pickup timing light, check each of the suspected accessory pulleys to determine if any of them is related to the frequency of the disturbance. Check each of the accessory systems, both engaged and under maximum load and disengaged or under minimum load. 10. Allow the engine to idle, then place the transmission in DRIVE. 11. Slowly increase the engine RPM to the level recorded during duplication of the disturbance, then maintain that speed closely. 12. Using the inductive pickup timing light, check each of the suspected accessory pulleys to determine if any of them is related to the frequency of the disturbance. Check each of the accessory systems, both engaged and under maximum load and disengaged or under minimum load. 13. Turn OFF the ignition. Did you identify an engine driven accessory system as being related to the frequency of the disturbance?	Go to Step 11	Go to Vibration Diagnostic Aids - Vibration Intermittent or Not Duplicated
11	Inspect the components of the engine driven accessory system for the following: • Loose and/or missing fasteners - Heat Shields, if equipped - Joints and/or couplings: Nuts, bolts, studs, clamps, straps - Bracket and/or insulator mounting • Inadequate clearance to body and/or chassis components Inspect with the accessory system both under a LOAD and NOT loaded • Improper alignment • Bent or damaged pulleys • Disconnected and/or missing insulators • Cracked, dry-rotted, and/or oil-soaked component insulators • Stretched, twisted, broken, torn, and/or collapsed component insulators • Bent, twisted, cracked and/or deformed component brackets Repair, replace, and/or realign the engine driven accessory system components as indicated by the inspection.		

	Did you find and correct a condition?	Go to Step 13	Go to Step 12
12	1. Remove the engine driven accessory and bracket, or brackets from the engine. 2. Thoroughly inspect the accessory bracket, or brackets, bolts/nuts/studs, and the accessory itself for signs of the following: Bent, twisted, cracked and/or deformed conditions 3. Replace any of the components found to exhibit any of these conditions. 4. Reinstall the components to the engine. Did you find and correct a condition?	Go to Step 13	Go to Step 17
13	Check the vehicle to determine if the disturbance is now significantly reduced or eliminated. Perform the following steps: 1. Install a scan tool into the customer's vehicle. 2. Install the vibration analyser, if available, into the customer's vehicle; place the sensor in exactly the same location as it was originally placed in the vehicle. 3. Block the front wheels. 4. Apply BOTH the service brakes and the handbrake. 5. Start the engine. 6. Place the transmission in NEUTRAL or PARK. 7. Slowly increase the engine RPM to the level at which the disturbance was most noticeable. 8. Record the engine RPM obtained on the scan tool and the most dominant frequency reading if obtained on the vibration analyzer, if available. 9. Place the transmission in DRIVE. 10. Slowly increase the engine RPM to the level at which the disturbance was most noticeable. 11. Record the engine RPM obtained on the scan tool and the most dominant frequency reading if obtained on the vibration analyzer, if available. 12. If the disturbance has been significantly reduced or eliminated, confirm the results by placing the transmission into REVERSE, then repeat steps 10 and 11. Reverse-loading of the powertrain may increase or change the characteristics of the vibration. Has the disturbance been significantly reduced or eliminated?	Go to Step 18	Go to Step 14
14	Have you investigated powertrain isolation as a possible cause of the disturbance?	Go to Step 15	Go to Step 5
15	Have you investigated engine driven accessories as a possible cause of the disturbance?	Go to Vibration Analysis - Engine Balance	Go to Step 16
16	Is the vibration analyser available?	Go to Step 8	Go to Vibration Diagnostic Aids - Vibration Intermittent or Not Duplicated

17	Replace the engine driven accessory component causing the disturbance. Did you complete the replacement?	Go to Step 18	--
18	Install or connect any components that were removed or disconnected during diagnosis. Is the disturbance still present?	Go to Step 2	System OK

&#169© Copyright Chevrolet. All rights reserved

Vibration Analysis - Engine Balance

Test Description

The numbers below refer to the step numbers on the diagnostic table.

4. If sufficient clearance exists to separate the transmission torque converter from the engine flywheel/flexplate, then further tests can be used to isolate the transmission from the engine.
5. An engine flywheel/flexplate that has excessive lateral runout, when combined with the mass of the transmission torque converter, can produce a disturbance.
6. An engine flywheel/flexplate that is loose at the engine crankshaft or that is cracked or damaged, when combined with the mass of the transmission torque converter, can produce a disturbance.
7. This step is designed to isolate the transmission from the engine to determine if the disturbance is related to the engine ONLY.
9. Re-indexing the transmission torque converter to the engine flywheel/flexplate alters the balance relationship between the torque converter and the rear of the engine.
11. If an electronic vibration analyser, is available, place the sensor onto the underside of the engine oil pan along the FRONT and the REAR edge allows for a determination to be made, which will help to narrow down the cause of the disturbance.
13. An engine flywheel that has excessive lateral runout, when combined with the extra mass of the clutch pressure plate and clutch driven plate, can produce a disturbance.
14. The clutch pressure plate and the engine flywheel are marked for proper indexing of the heavy-spot of one to the light-spot of the other. Improper indexing of the pressure plate to the flywheel can produce a disturbance.
15. An engine flywheel that is loose at the engine crankshaft or that is cracked, damaged and/or missing balance weights; and/or a clutch pressure plate and clutch driven plate that has loose springs, cracks, warpage, damage and/or missing balance weights - can produce a disturbance when their mass is combined.
16. An engine flywheel that is loose at the engine crankshaft or that is cracked, damaged and/or missing balance weights; and/or a clutch pressure plate and clutch driven plate that has loose springs, cracks, warpage, damage and/or missing balance weights - can produce a disturbance when their mass is combined.
17. Re-indexing the pressure plate to the engine flywheel alters the balance relationship between the pressure plate/flywheel assembly and the rear of the engine.
18. An engine flywheel/flexplate that is damaged, misaligned, and/or imbalanced, can produce a disturbance.

19. An engine crankshaft balancer that is damaged, misaligned, and/or imbalanced, can produce a disturbance.

Step	Action	Yes	No
Warning: Refer to Work Stall Test Warning in the Preface section.			
1	Were you sent here from the Vibration Analysis - Engine/Accessory Isolation table?	Go to Step 2	Go to Vibration Analysis - Engine/Accessory Isolation
2	Is an electronic vibration analyser available?	Go to Step 3	Go to Vibration Diagnostic Aids - Vibration Intermittent or Not Duplicated
3	Is the vehicle equipped with a manual gearbox?	Go to Step 11	Go to Step 4
4	**Danger:** Do not use a service jack in locations other than those specified to lift this vehicle. Lifting the vehicle with a jack in other locations could cause the vehicle to slip off the jack and roll; this could cause injury or death. 1. Raise and support the vehicle. Refer to Lifting and Jacking the Vehicle . 2. Remove the flywheel/flexplate-to-torque converter bolts access cover, if equipped. 3. Determine if sufficient clearance exists to separate the transmission torque converter away from the engine flywheel/flexplate and safely secure the torque converter from accidentally engaging with the flywheel/flexplate. Is there sufficient clearance to separate and safely secure the transmission torque converter away from the engine flywheel/flexplate?	Go to Step 5	Go to Step 11
5	1. With the flywheel/flexplate-to-torque converter access cover still removed, and with the vehicle still raised, mark the position of the transmission torque converter in relation to the engine flywheel/flexplate. 2. Disconnect the torque converter and move it away from the flywheel/flexplate. 3. Secure the transmission torque converter away from the engine flywheel/flexplate to avoid accidental engagement with the flywheel/flexplate. 4. Lower the vehicle, start the engine and allow the engine to idle. 5. Raise and support the vehicle. Refer to Lifting and Jacking the Vehicle . 6. Visually inspect the flywheel/flexplate for excessive lateral runout. 7. Lower the vehicle. 8. Turn OFF the ignition. Did the flywheel/flexplate exhibit excessive lateral runout?	Go to Step 8	Go to Step 6
	1. Raise and support the vehicle. Refer to Lifting and Jacking the Vehicle . 2. Inspect the flywheel/flexplate for the following: • Looseness at the engine crankshaft		

6	• Cracks and/or damage • Missing balance weights Did the flywheel/flexplate exhibit any of the conditions listed?	Go to Step 8	Go to Step 7
7	1. With the transmission torque converter still secured away from the engine flywheel/flexplate to avoid accidental engagement with the flywheel/flexplate, lower the vehicle. 2. Block the front wheels. 3. Apply BOTH the service brakes and the handbrake. 4. With the scan tool and the electronic vibration analyser still installed, start the engine. 5. Place the transmission in NEUTRAL or PARK. 6. Slowly increase the engine RPM to the level at which the disturbance is most noticeable. 7. Record the engine RPM obtained on the scan tool and the most dominant frequency reading if obtained on a electronic vibration analyser. 8. Turn OFF the ignition. Has the disturbance been significantly reduced or eliminated?	Go to Step 9	Go to Step 11
8	1. If the flywheel/flexplate is loose at the engine crankshaft, tighten the flywheel/flexplate mounting bolts in sequence and to specification. 2. If the flywheel/flexplate is cracked, damaged, and/or has missing balance weights, replace the damaged flywheel/flexplate. Did you complete the tightening or replacement?	Go to Step 20	—
9	1. Raise and support the vehicle. Refer to Lifting and Jacking the Vehicle . 2. Re-index the transmission torque converter to the engine flywheel/flexplate, 120 degrees from its original position. 3. Reconnect the transmission torque converter to the engine flywheel/flexplate. 4. Lower the vehicle. 5. Block the front wheels. 6. Apply BOTH the service brakes and the handbrake. 7. With the scan tool and a electronic vibration analyser still installed, start the engine. 8. Place the transmission in NEUTRAL or PARK. 9. Slowly increase the engine RPM to the level at which the disturbance is most noticeable. 10. Record the engine RPM obtained on the scan tool and the most dominant frequency reading if obtained on a electronic vibration analyser. 11. If the disturbance is still noticeable, re-index the torque converter again to obtain the least amount of disturbance. Has the disturbance been significantly reduced or eliminated?	Go to Step 20	Go to Step 10
10	Replace the out-of-balance transmission torque converter.		—

	Did you complete the replacement?	Go to Step 20	
11	1. Raise and support the vehicle. Refer to Lifting and Jacking the Vehicle . 2. Position the *GE-38792-A* Electronic Vibration Analyzer (EVA) 2 sensor onto the underside of the engine sump, along the FRONT edge. 3. Lower the vehicle. 4. Block the front wheels. 5. Apply BOTH the service brakes and the handbrake. 6. With the scan tool and the *GE-38792-A* Electronic Vibration Analyzer (EVA) 2 , still installed, start the engine. 7. Place the transmission in NEUTRAL or PARK. 8. Slowly increase the engine RPM to the level at which the disturbance is most noticeable. 9. Record the engine RPM obtained on the scan tool and the most dominant frequency reading if obtained on the *GE-38792-A* Electronic Vibration Analyzer (EVA) 2 from the underside of the engine sump. 10. Repeat steps 1 through 9, placing the *GE-38792-A* Electronic Vibration Analyzer (EVA) 2 sensor onto the underside of the engine sump, along the REAR edge. Is the disturbance greater along the FRONT of the engine?	Go to Step 19	Go to Step 12
12	Is the vehicle equipped with an automatic transmission?	Go to Step 18	Go to Step 13
13	1. Raise and support the vehicle. Refer to Lifting and Jacking the Vehicle . 2. Remove the flywheel inspection cover. 3. Start the engine. Allow the engine to idle. 4. Visually inspect the engine flywheel clutch surface for excessive lateral runout. Does the engine flywheel clutch surface exhibit excessive lateral runout?	Go to Step 18	Go to Step 14
14	Inspect the clutch pressure plate to engine flywheel mounting for proper factory indexing. Is the clutch pressure plate properly indexed to the engine flywheel?	Go to Step 16	Go to Step 15
15	1. Remove the clutch pressure plate and clutch driven plate from the engine flywheel. 2. Inspect the engine flywheel for the following: • Looseness at the engine crankshaft • Cracks, warpage and/or damage • Missing balance weights 3. Inspect the clutch pressure plate and clutch driven plate for the following: • Loose and/or damaged clutch driven plate damper springs • Loose and/or damaged clutch pressure plate diaphragm springs • Cracks, warpage and/or damage • Missing balance weights		

	Do any of the above conditions exist?	Go to Step 18	Go to Step 17
16	1. Remove the clutch pressure plate and clutch driven plate from the engine flywheel. 2. Inspect the engine flywheel for the following: • Looseness at the engine crankshaft • Cracks, warpage and/or damage • Missing balance weights 3. Inspect the clutch pressure plate and clutch driven plate for the following: • Loose and/or damaged clutch driven plate damper springs • Loose and/or damaged clutch pressure plate diaphragm springs • Cracks, warpage and/or damage • Missing balance weights Do any of the above conditions exist?	Go to Step 18	Go to Vibration Diagnostic Aids - Vibration Intermittent or Not Duplicated
17	Re-index the pressure plate to the engine flywheel. Did you complete the re-indexing?	Go to Step 20	--
18	Replace the engine flywheel/flexplate. Did you complete the replacement?	Go to Step 20	—
19	Replace the engine crankshaft balancer. Did you complete the replacement?	Go to Step 20	—
20	Check the vehicle to determine if the disturbance is now significantly reduced or eliminated. Perform the following steps: 1. Install or connect any components that were removed or disconnected during diagnosis. 2. Install a scan tool into the customer's vehicle. 3. Install a electronic vibration analyser, if available, into the customer's vehicle; place the sensor in exactly the same location as it was originally placed in the vehicle. 4. Block the front wheels. 5. Apply BOTH the service brakes and the handbrake. 6. Start the engine. 7. Place the transmission in NEUTRAL or PARK. 8. Slowly increase the engine RPM to the level at which the disturbance was most noticeable. 9. Record the engine RPM obtained on the scan tool and the most dominant frequency reading if obtained on a electronic vibration analyser, if available. 10. Place the transmission in DRIVE. 11. Slowly increase the engine RPM to the level at which the disturbance was most noticeable. 12. Record the engine RPM obtained on the scan tool and the most dominant frequency reading if		

	obtained on a electronic vibration analyser, if available. 13. If the disturbance has been significantly reduced or eliminated, confirm the results by placing the transmission into REVERSE, then repeat steps 11 and 12. Reverse-loading of the powertrain may increase or change the characteristics of the vibration. Has the disturbance been significantly reduced or eliminated?	Go to Step 21	Go to Vibration Diagnostic Aids - Vibration Intermittent or Not Duplicated
21	Road test the vehicle. Is the disturbance still present?	Go to Vibration Diagnostic Aids - Vibration Intermittent or Not Duplicated	System OK

&#169© Copyright Chevrolet. All rights reserved

Vibration Diagnostic Aids - Vibration Intermittent or Not Duplicated

If you have not been able to duplicate the vibration concern or have only been able to duplicate the concern intermittently, review the following information.

Most vibration concerns that cannot be duplicated are due to either specific conditions that are not present during the duplicating attempts, or due to not following the procedures designed to duplicate concerns properly and in the sequence indicated.

Specific Conditions Can Affect the Condition

Consider the following conditions which may not have been present while attempts were made to duplicate the vibration concern. Attempt to obtain more specific information from the customer as to the EXACT conditions that are present when they experience the vibration which they are concerned about. Attempt to duplicate the vibration concern again while recreating the EXACT conditions necessary, except those which pose a safety concern or are outside the boundaries of normal operating conditions, such as loading the vehicle beyond its designed weight ratings, etc.

Most attempts to duplicate a vibration concern are made after the vehicle has been driven to the repair facility and perhaps even sat inside the building for a time; the vehicle may be too warm to detect the concern during duplication efforts. The opposite could also occur; perhaps the vehicle has sat out in the cold for a time and fails to reach full operating temperatures during attempts to duplicate the concern.

Temperature, Ground-Out, Accessory Load

Flat Spots on tyres

Tyres which have sat and been cool for a time can develop flat spots.

Irregular Wear on tyre Treads

Tyres which have sat and been cool for a time will be stiffer and any irregular wear conditions will be more noticeable than they will be once the tyres have warmed and softened.

Exhaust System Growth

Exhaust systems may exhibit a ground-out condition when cool which goes away once the system is hot. The opposite may be true that the exhaust system is fine when cool but a ground-out condition occurs once the system reaches operating temperatures. Exhaust systems can grow by 2½–5 cm (1–2 in) when hot.

Engine-Driven Accessory Noises

Note: When a stethoscope equipped with a probe is used to assist in identifying possible vibrating components, the results must be compared to the sound quality of the same accessory, in a equally-equipped, same model year and type, KNOWN GOOD vehicle, and under the same conditions.

A stethoscope equipped with a probe can be used as an additional means to assist in identifying accessories which may be causing or contributing to a vibration concern.

- Belt Whipping
  An engine accessory drive belt, or belts could exhibit a whipping condition if a belt is deteriorating and deposits are building up on the underside of the belt.
- Loose Mounting Brackets or Component Ground-Out
  Engine-driven accessories such as an alternator, a power steering pump, or an air conditioning compressor could exhibit noise conditions due to either loose mounting brackets or due to related components of the system in a ground-out condition during certain operation of that accessory system.
- Cold or Hot
  Accessories could exhibit noise conditions when cool which go away once they are fully warmed-up, or the opposite may be true.
- Load on an Accessory Component
  Accessories could exhibit a noise condition while under a heavy load - perhaps when combined with a cool or fully warmed-up condition.
- Bent or Misaligned Pulleys
  Bent or mis-aligned pulleys in one or more engine-driven accessory systems could contribute to a noise or vibration condition.
- Fluid Level in Accessory Systems
  Accessories could exhibit a noise condition due to an abnormal amount of fluid contained in the system of which the accessory is a part. For example:
  - An improper power steering fluid level could produce noises in the power steering system.
  - An improper air conditioning refrigerant level or an excessive amount of refrigerant oil could produce noises or possibly vibrations in the air conditioning system.
- Incorrect Fluid Type in Accessory Systems
  Accessories could exhibit a noise condition due to the incorrect type of fluid contained in the system of which the accessory is a part.

Vehicle Payload

The vibration concern may only occur when the vehicle is carrying heavy payloads or towing a trailer; the vehicle may have been empty during duplication efforts.

Heavy Payload

The vehicle may have been empty during attempts to duplicate the vibration concern, but the customer may actually experience the vibration concern while the vehicle is carrying a large payload.

Trailer Towing

The customer may experience the vibration concern only while towing a trailer.

Roadway Selection

The selection of roadways used to perform the vibration duplication procedures is likely to be in the near vicinity of the repair facility and may not provide a road surface that is similar enough to the surface on which the customer usually drives the vehicle.

The customer may only experience the vibration on a particular roadway. Perhaps the roadway is overly crowned or is very bumpy or rough.

&#169© Copyright Chevrolet. All rights reserved

Brake Disc/Drum Balance Inspection

Danger: Do not use a service jack in locations other than those specified to lift this vehicle. Lifting the vehicle with a jack in other locations could cause the vehicle to slip off the jack and roll; this could cause injury or death.

1. Support the vehicle drive axle on a suitable hoist. Refer to Lifting and Jacking the Vehicle .
2. Remove the tyre and wheel assemblies from the drive shaft. Refer to Tyre and Wheel Removal and Installation .

Warning: Refer to Work Stall Test Warning in the Preface section.

3. Reinstall the wheel nuts in order to retain the brake discs.
4. Run the vehicle at the concern speed while inspecting for the presence of the vibration.

Caution: Do not depress the brake pedal with the brake discs and/or the brake drums removed, or with the brake callipers repositioned away from the brake discs, or damage to the brake system may result.

5. If the vibration is still present, remove the discs from the drive shaft, then run the vehicle back to the concern speed.
6. If the vibration is eliminated when the brake discs are removed from the drive shaft, repeat the test with one disc installed at a time. Replace the disc that is causing or contributing to the vibration concern.

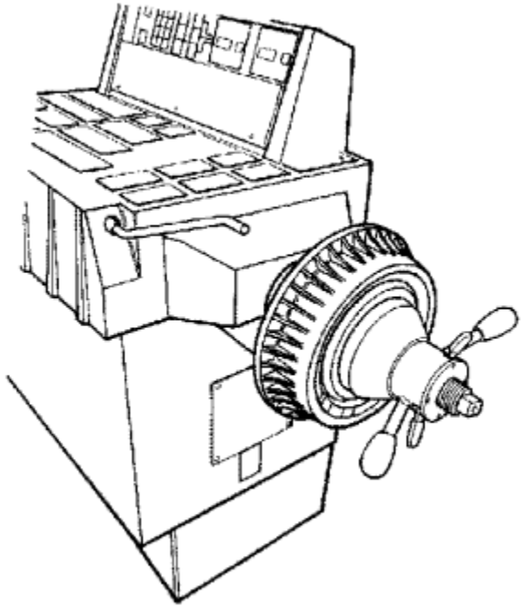

7. If a brake disc was replaced as a result of following the previous steps, or if necessary to confirm the results obtained during the previous steps, and/or to check the non-drive shaft components, perform the following:
   7.1. Mount the brake disc/drum on a balancer in the same manner as a tyre and wheel assembly.

   Note: Check brake rotors/drums for static imbalance only; ignore the dynamic imbalance readings.

   7.2. Inspect the disc/drum for static imbalance.

There is not a set tolerance for brake disc/drum static imbalance. However, any brake disc/drum measured in this same manner which is over 21 g (¾ oz) may have the potential to cause or contribute to a vibration. Discs/drums suspected of causing or contributing to a vibration should be replaced. Any disc/drum that is replaced should be checked for imbalance in the same manner.

© Copyright Chevrolet. All rights reserved

Fastener Tightening Specifications

Application	Specification	
	Metric	English
Bonnet Rear Reveal Moulding Nut	4.7 N·m	42 lb in
Tailgate Side Applique Nut	6 N·m	53 lb in
Rear End Spoiler Nut	6 N·m	53 lb in

© Copyright Chevrolet. All rights reserved

Emblem/Nameplate Replacement

Special Tools

EL-25070 Heat Gun

For equivalent regional tools, refer to Special Tools .

Caution: Refer to Exterior Trim Emblem Removal Caution in the Preface section.

1. The part and vehicle surface should be 21°C (70°F) prior to installation. The vehicle should remain inside in a temperature range of 21°C (70°F) for 1 hour after assembly to allow the adhesive to develop sufficient bond strength.
2. Using masking tape, mark two sides of the placement where the old emblem/nameplate was placed.
3. Use a *EL-25070* heat gun or equivalent, to heat the adhesive backed emblem/nameplates.
4. A flat-bladed plastic tool can assist in the removal process.
5. Wipe the vehicle surface area with a 50/50 solution by volume of isopropyl alcohol and clean drinkable water.
6. Dry the area with a clean lint-free cotton cloth.
7. Close any doors, tailgates, endgates and rear compartment lids where emblem/nameplates are to be placed.
8. When removing protective liners from adhesive backed emblem/nameplates, be careful not to touch the adhesive tape or allow the tape to come in contact with dirt or any foreign matter prior to the placement and adhesion.
9. Remove the protective liner from the emblem/nameplate.
10. Position, align and press the emblem/nameplate to the previously marked location.
11. Using a clean towel and the palm of the hand, press firmly for approximately 30 seconds, the emblem/nameplate to the vehicle body panel surface.
12. Ensure the emblem/nameplate is attached firmly to the body panel surface.
13. Remove the masking tape and clean all tape residue from the vehicle body panel surface around the emblem/nameplate attachment location.

© Copyright Chevrolet. All rights reserved

Body Panel Paint Protector Replacement - VGC

1. The paint protective film and vehicle surface temperature should be 13-32°C (55-90°F) for best results.
2. Automatic car washes should be avoided for at least 24 hours after the paint protective film application.
3. Wipe the vehicle surface with isopropyl alcohol or flash naptha at the application area.
4. Dry the surface with a clean lint-free cloth.
5. Create a mixture of 25 percent isopropyl alcohol and 75 percent water and two drops of baby shampoo per 16 oz of fluid mixture.
6. Remove the backing liner from the protective film patch.
7. Use the solution to liberally spray the adhesive side of the protective patch, the mounting location along with your hands.
8. Position the paint protective film patch to the desired location on the vehicle.
9. Spray the surface of the film with the alcohol, water and soap solution.
10. Using a dampened squeegee, start at the centre of the protective patch, working outward in order to remove the air and solution from under the protective patch.
11. Release any air bubbles with a pin.
12. Dry the surface with a clean, lint-free cotton cloth.

© Copyright Chevrolet. All rights reserved

Front Side Door Window Frame Rear Applique Replacement

Stripes or Decals

The stripes and decals adhere to a painted surface using pressure sensitive adhesive.

The use of a wetting solution aids the technician in lifting and positioning the stripe or decal during the installation. The wetting solution ensures a better bond between the stripe or decal and the panel assembly. Use a wetting solution when applying large stripe and decal packages.

Complete the following procedures before you apply a stripe or a decal:

- Metal repair or refinishing after a collision
- Painting the underlying surface

Maintain a temperature 21-38°C (70-100°F) on the body surfaces and the decals prior to installation. The decal requires auxiliary heat sources in order to warm the body surfaces and decals. If the temperature is below 21°C (70°F) the decal may not adhere to the body surface properly.

Note: You may apply stripes or decals using the dry method. Use the wet method if the dry method does not result in a bubble free application. This may be the case in large graphics packages.

Use the wet method in order to apply the stripes or decals that are applied on flexible surfaces (fascias, etc.). This will reduce the formation of bubbles under the decal due to the outgassing potential of the flexible materials.

Use the following equipment and materials in order to apply a stripe or a decal:

- A wetting solution
  A foaming type of window cleaner that does not contain ammonia.
- A silicone, wax and grease remover
- Varnish Makers and Painters (VM&P) naphtha
- Isopropyl alcohol
- A squeegee
  - 75-100 mm (3-4 in) wide
  - Made of plastic or hard rubber

  Remove the burrs from any sharp or rough edges in order to prevent scratching of the stripe or decal.

- A water bucket and sponge or spray bottle
- Sandpaper
  - 800 grit or finer
  - Wet or dry type
- A heat gun or heat lamp
- A clean, lint-free wiping cloth
- A sharp knife or razor blade
- A pair of scissors
- A fine pin or needle
- A marking pencil

Stripe or Decal Removal

1. Remove the following components:
   - Necessary mouldings or trim panel
   - Moulding attaching clips
   - Handles
   - Sidemarker lamps
   - Other stripe or decal overlapping parts
2. Clean the following areas as needed:
   - The repair surfaces
   - The adjacent panels
   - The openings
3. Use 3M™ ScotchBrite moulding adhesive remover disk 3M™ P/N 07501 or equivalent in order to remove the stripe or decal from the body panel.
4. Use Varnish Makers and Painters (VM&P) naphtha in order to remove all traces of adhesive residue from the painted surfaces.

Stripe or Decal Installation -- Wet Method

1. Prepare the surface.

   Note: Remove any imperfections that would appear through the stripe or decal if the area has been refinished.

2. Clean the painted surface using the following types of removers:
   - Silicone
   - Wax
   - Grease

3. Clean the area where the stripe or decal will be applied using a 50/50 mixture of isopropyl alcohol and water.
4. Wipe the panel surface using a clean cloth while the solvent is still wet. Allow the panel surface to dry.
5. Apply the wetting solution to the area where you are installing the stripe or decal.

   Application of a soapy wetting solution on the top side of the stripe or decal will ease the pull of the squeegee on the stripe or decal and help to eliminate damage.

   Note: Do not touch the adhesive backing of the stripes.

6. Apply the wetting solution on the adhesive side of the stripe or decal.

   Remove the backing material of the stripe or the decal as needed.

7. Apply the strip or decal to the panel. The wetting solution will allow movement for proper positioning on the panel surface.
8. Working from the centre where possible, squeegee the stripe or decal into position. Apply additional wetting solution as needed in order to ease installation.
9. Apply heat to the stripe or decal at the recessed areas. Press the stripe or decal into the recess in order to obtain a firm bond.
10. Use adequate light reflection in order to inspect the stripe or decal from a critical angle. This technique detects any irregularities that may have developed during the installation.

    Note: Do not use a razor blade or a knife edge in order to pierce the air bubbles.

11. Remove all air bubbles by piercing the bubble with one of the following items:
    - A safety pin
    - A needle
    - A tool with the same size piercing tip
12. Pierce the bubble on the outer edge. Force the air out through the opposite edge using the blade of the squeegee.
13. Install any previously removed components. Clean the components as needed.

&#169© Copyright Chevrolet. All rights reserved

Liftgate Side Applique Replacement

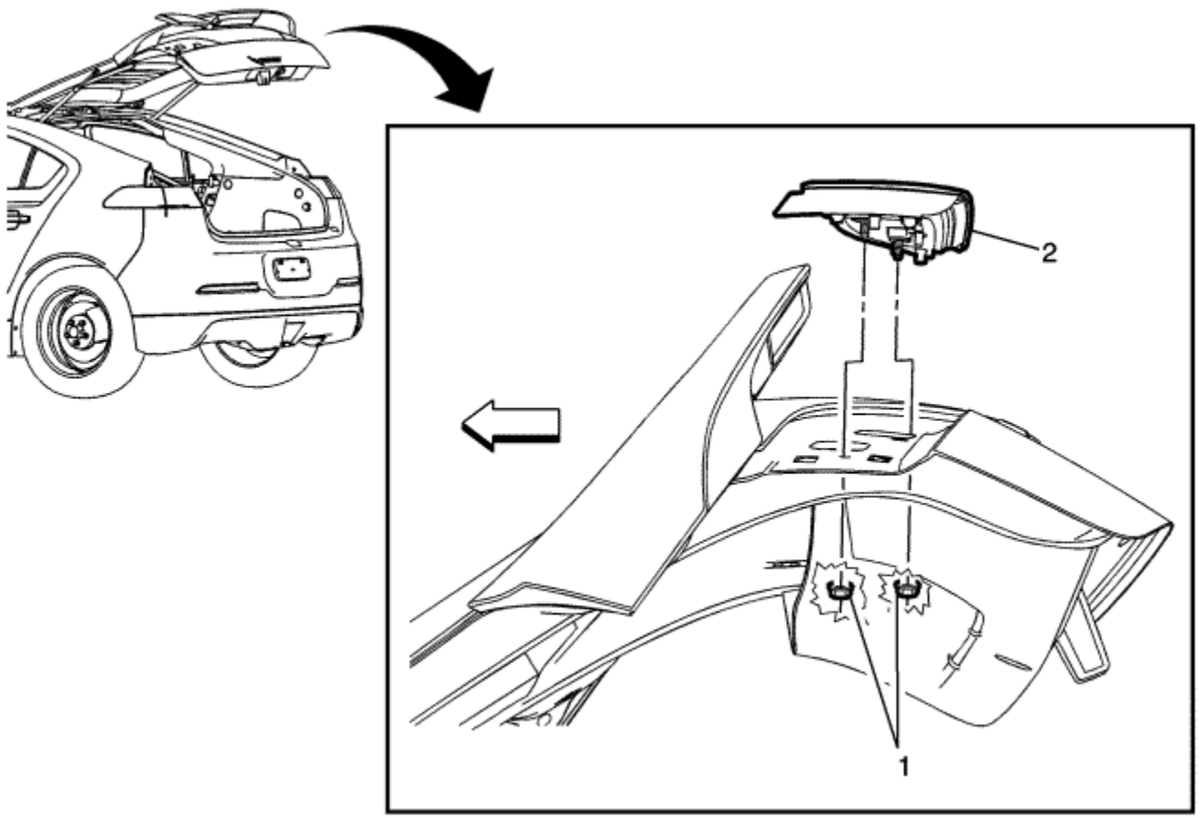

Callout	Component Name
Preliminary Procedures 1. Open and suitably support the tailgate assembly. 2. Remove the liftgate lower trim finish panel. Refer to Liftgate Lower Trim Finish Panel Replacement .	

1	Tailgate Side Applique Nut (Qty: 2) **Caution:** Refer to Fastener Caution in the Preface section. **Tighten** 6 N·m (53 lb in)
2	Liftgate Side Applique **Procedure** 1. There is a tab type latch at the centre bottom of the applique that will need to be slightly moved to the left using a small flat bladed tool in order to release the applique from the outer tailgate panel. 2. Lift the applique up from the tailgate and release the tab in order to remove.

© Copyright Chevrolet. All rights reserved

Quarter Panel Tail Lamp Upper Moulding Replacement

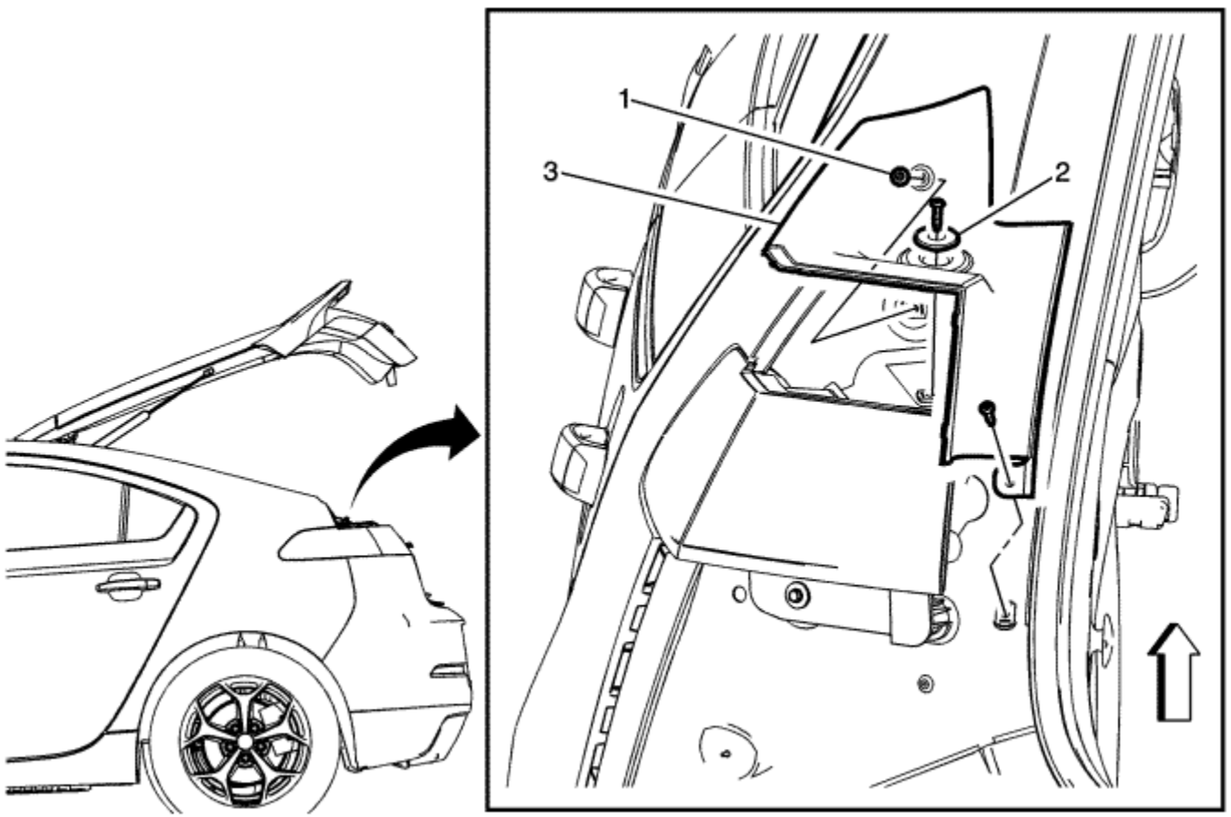

Callout	Component Name
Preliminary Procedures 1. Open and support the tailgate assembly. 2. Remove the rear bumper fascia. Refer to Rear Bumper Fascia Removal and Installation : Volt → Ampera .	

1	Quarter Panel Tail Lamp Moulding Screw (Qty: 3) **Caution:** Refer to Fastener Caution in the Preface section. **Tighten** 2.5 N·m (22 lb in)
2	Rear Bumper Fascia Upper Retainer Grommet
3	Quarter Panel Tail Lamp Moulding **Tip** Lift the quarter panel tail lamp moulding from the tail lamp pocket.

© Copyright Chevrolet. All rights reserved

Rear Side Door Window Frame Rear Applique Replacement

Stripes or Decals

The stripes and decals adhere to a painted surface using pressure sensitive adhesive.

The use of a wetting solution aids the technician in lifting and positioning the stripe or decal during the installation. The wetting solution ensures a better bond between the stripe or decal and the panel assembly. Use a wetting solution when applying large stripe and decal packages.

Complete the following procedures before you apply a stripe or a decal:

- Metal repair or refinishing after a collision
- Painting the underlying surface

Maintain a temperature 21-38°C (70-100°F) on the body surfaces and the decals prior to installation. The decal requires auxiliary heat sources in order to warm the body surfaces and decals. If the temperature is below 21°C (70°F) the decal may not adhere to the body surface properly.

Note: You may apply stripes or decals using the dry method. Use the wet method if the dry method does not result in a bubble free application. This may be the case in large graphics packages.

Use the wet method in order to apply the stripes or decals that are applied on flexible surfaces (fascias, etc.). This will reduce the formation of bubbles under the decal due to the outgassing potential of the flexible materials.

Use the following equipment and materials in order to apply a stripe or a decal:

- A wetting solution
  A foaming type of window cleaner that does not contain ammonia.
- A silicone, wax and grease remover
- Varnish Makers and Painters (VM&P) naphtha
- Isopropyl alcohol
- A squeegee
  - 75-100 mm (3-4 in) wide
  - Made of plastic or hard rubber

  Remove the burrs from any sharp or rough edges in order to prevent scratching of the stripe or decal.

- A water bucket and sponge or spray bottle
- Sandpaper
  - 800 grit or finer
  - Wet or dry type
- A heat gun or heat lamp
- A clean, lint-free wiping cloth
- A sharp knife or razor blade
- A pair of scissors
- A fine pin or needle
- A marking pencil

Stripe or Decal Removal

1. Remove the following components:
   - Necessary mouldings or trim panel
   - Moulding attaching clips
   - Handles
   - Sidemarker lamps
   - Other stripe or decal overlapping parts
2. Clean the following areas as needed:
   - The repair surfaces
   - The adjacent panels
   - The openings
3. Use 3M™ ScotchBrite moulding adhesive remover disk 3M™ P/N 07501 or equivalent in order to remove the stripe or decal from the body panel.
4. Use Varnish Makers and Painters (VM&P) naphtha in order to remove all traces of adhesive residue from the painted surfaces.

Stripe or Decal Installation -- Wet Method

1. Prepare the surface.

   Note: Remove any imperfections that would appear through the stripe or decal if the area has been refinished.

2. Clean the painted surface using the following types of removers:
   - Silicone
   - Wax
   - Grease

3. Clean the area where the stripe or decal will be applied using a 50/50 mixture of isopropyl alcohol and water.
4. Wipe the panel surface using a clean cloth while the solvent is still wet. Allow the panel surface to dry.
5. Apply the wetting solution to the area where you are installing the stripe or decal.

   Application of a soapy wetting solution on the top side of the stripe or decal will ease the pull of the squeegee on the stripe or decal and help to eliminate damage.

   Note: Do not touch the adhesive backing of the stripes.

6. Apply the wetting solution on the adhesive side of the stripe or decal.

   Remove the backing material of the stripe or the decal as needed.

7. Apply the strip or decal to the panel. The wetting solution will allow movement for proper positioning on the panel surface.
8. Working from the centre where possible, squeegee the stripe or decal into position. Apply additional wetting solution as needed in order to ease installation.
9. Apply heat to the stripe or decal at the recessed areas. Press the stripe or decal into the recess in order to obtain a firm bond.
10. Use adequate light reflection in order to inspect the stripe or decal from a critical angle. This technique detects any irregularities that may have developed during the installation.

    Note: Do not use a razor blade or a knife edge in order to pierce the air bubbles.

11. Remove all air bubbles by piercing the bubble with one of the following items:
    - A safety pin
    - A needle
    - A tool with the same size piercing tip
12. Pierce the bubble on the outer edge. Force the air out through the opposite edge using the blade of the squeegee.
13. Install any previously removed components. Clean the components as needed.

&#169© Copyright Chevrolet. All rights reserved

Radiator Grille Replacement

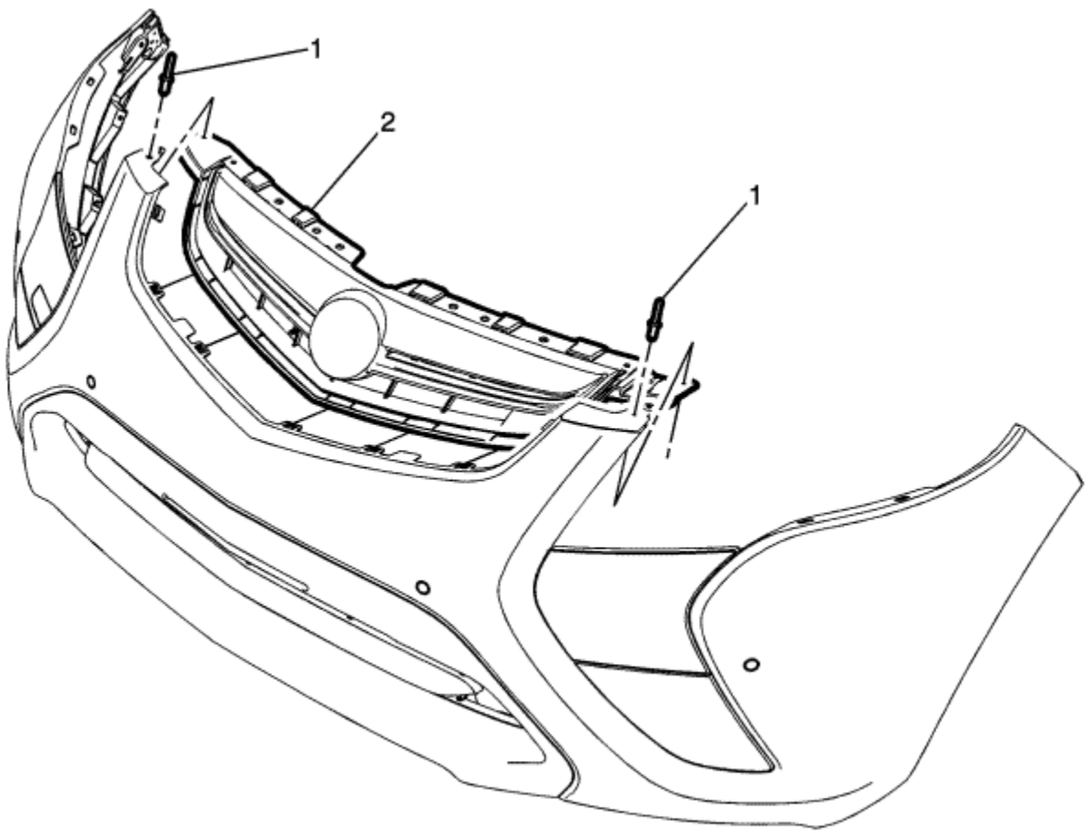

Callout	Component Name
Preliminary Procedures	

Warning: Use the proper eye protection when drilling to prevent metal chips from causing physical injury.

1. Remove the front bumper fascia. Refer to Front Bumper Fascia Removal and Installation : Volt → Ampera .

2. Drill and remove the two upper rivets from the corners of the front bumper upper fascia.
3. Remove the two locking retainers from the rear of the radiator grille.

1	Rivet (Qty: 2)
3	Radiator Grille Assembly **Procedure** 1. Remove the grille assembly from the rear of the front bumper fascia. 2. Transfer the radiator grille emblem. Refer to Emblem/Nameplate Replacement .

© Copyright Chevrolet. All rights reserved

Bonnet Rear Reveal Moulding Replacement

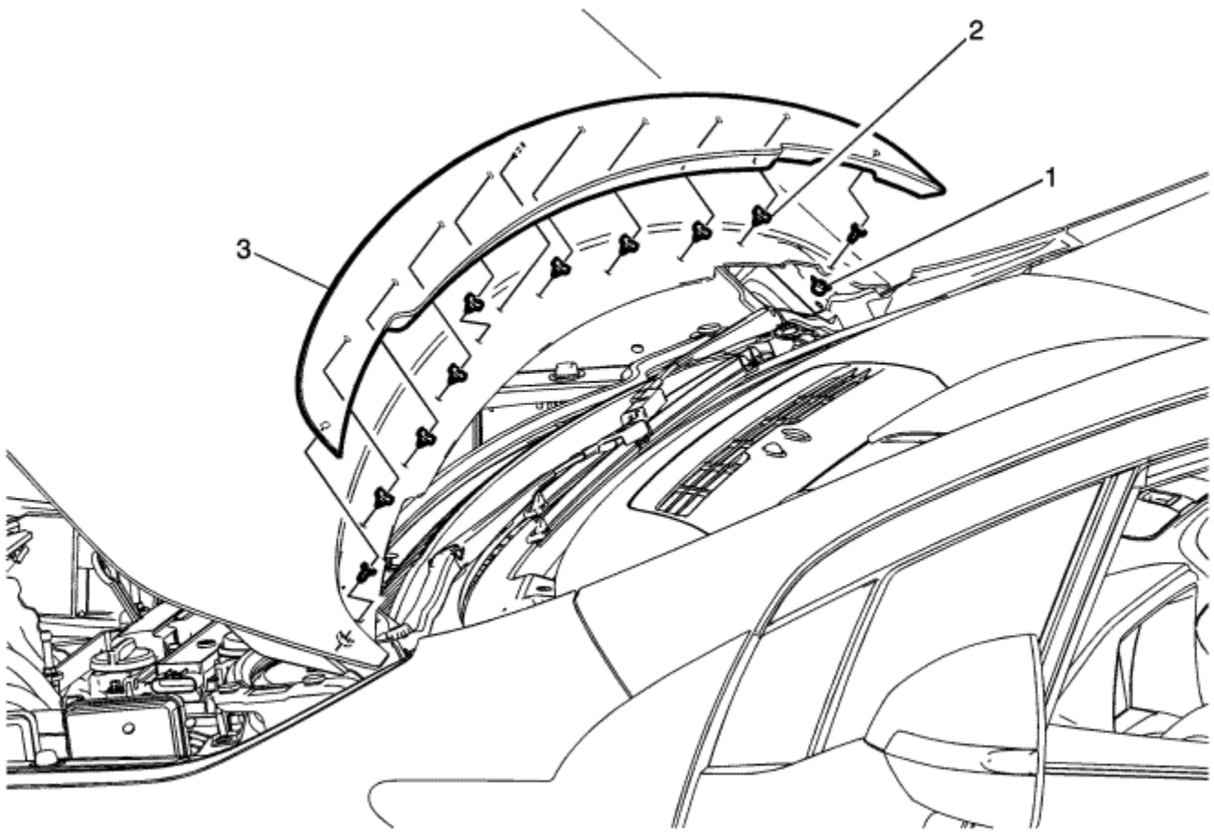

Callout	Component Name
Preliminary Procedure Open and suitably support the bonnet assembly.	
	Bonnet Rear Reveal Moulding Nut (Qty: 2)

1	**Caution:** Refer to Fastener Caution in the Preface section. **Tighten** 4.7 N·m (42 lb in)
2	Bonnet Rear Reveal Moulding Retainer (Qty: 8) **Procedure** 1. Access the two nuts from the bottom of the bonnet assembly. 2. Using a trim-type release tool, insert the tool between the rear of the outer bonnet panel and rear reveal moulding. 3. Gently pry each retainer upward, one retainer at a time 4. Remove the moulding from the rear edge of the bonnet.
3	Bonnet Rear Reveal Moulding Assembly **Caution:** Refer to Exterior Trim Emblem Removal Caution in the Preface section. **Procedure** 1. Using a plastic flat-bladed tool, clean any adhesive tape residue from the bonnet panel surface. 2. Use a 50 / 50 mixture by volume of isopropyl alcohol and clean drinkable water to clean any tape residue off the bonnet panel. 3. Dry the bonnet surface thoroughly before installing the new bonnet rear reveal moulding. 4. Peel the adhesive tape backing from the new bonnet rear reveal moulding. 5. Align the centre alignment pin to the centre bonnet hole. 6. Align and secure all of the retainers using a dry clean cotton shop towel and the palm of the hand. 7. Wet out the adhesive tape strip. 8. Secure the two outer nuts.

© Copyright Chevrolet. All rights reserved

Front Wing Upper Rear Moulding Replacement

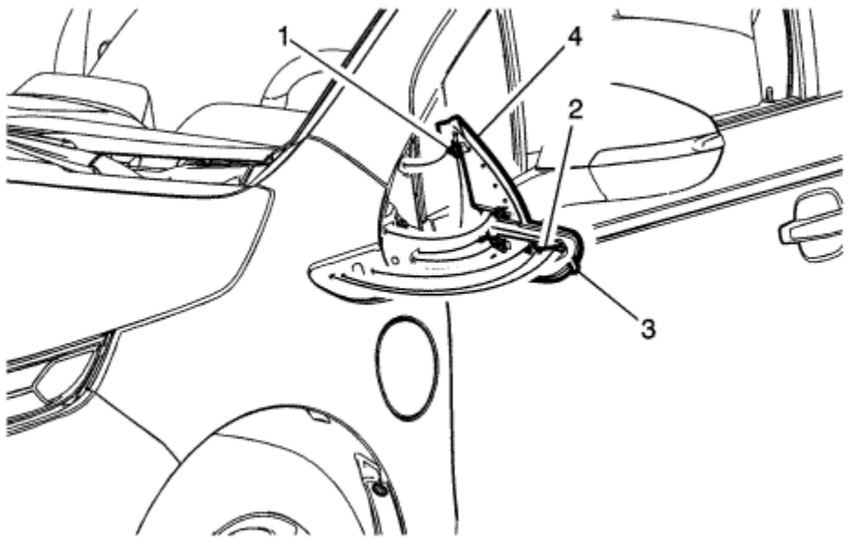

Callout	Component Name
Preliminary Procedure **Caution:** Refer to Exterior Trim Emblem Removal Caution in the Preface section. Open the front door on the side the front wing upper rear moulding will be serviced.	
1	W-clip Retainer (Qty: 4) **Preliminary Procedure** 1. Ensure to apply two layers of masking tape around the front edge of the moulding to prevent any paint surface damage. 2. Using a trim-type release tool, disengage the w-clip from the wing.
	Garnish Clip Retainer

2	**Procedure** 1. Begin at the forward edge and release the garnish retainer from the bodyside wing. 2. Release the three lower retainer clips. 3. Release the upper retainer clip using a trim-type release tool. 4. Remove the front wing upper rear moulding from the wing.
3	Adhesive Tape **Procedure** 1. Clean any adhesive tape residue from the front wing using a 50 / 50 mixture by volume of isopropyl alcohol and clean drinkable water. 2. Dry the wing surface thoroughly with a lint-free cotton towel.
4	Front Wing Upper Rear Moulding Assembly **Procedure** 1. Upon installation, align both lower alignment pins to the wing and then remove the adhesive tape backing. 2. Using the palm of the hand, secure each retainer location until fully seated to the wing.

© Copyright Chevrolet. All rights reserved

Sill Panel Moulding Replacement

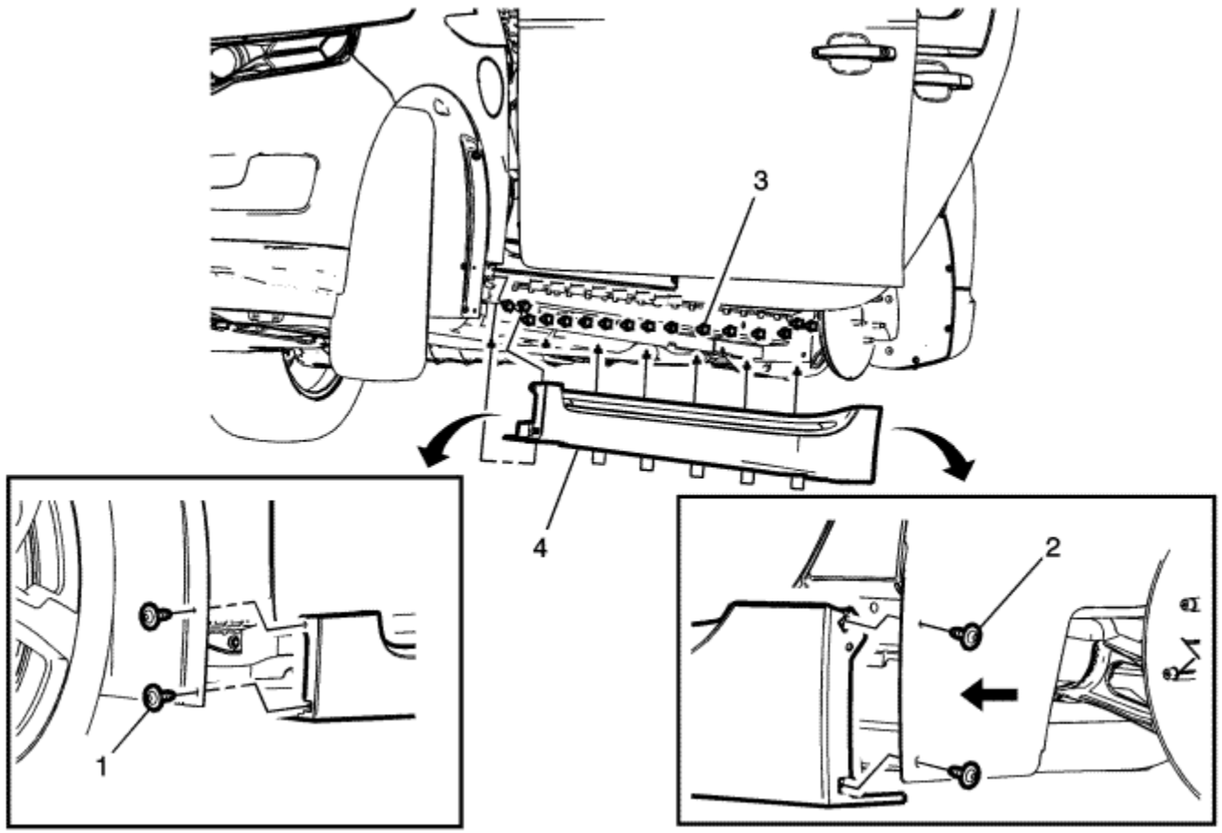

Callout	Component Name
Preliminary Procedures	

Danger: Do not use a service jack in locations other than those specified to lift this vehicle. Lifting the vehicle with a jack in those other locations could cause the vehicle to slip off the jack and roll; this could cause injury or death.

1. Raise and support the vehicle. Refer to Lifting and Jacking the Vehicle .
2. Open both doors on the side the lower rocker moulding will be serviced.

1	Front Wheelhouse Rear Screw (Qty: 2) **Caution:** Refer to Fastener Caution in the Preface section. **Tighten** 2.5 N·m (22 lb in)
2	Rear Wheelhouse Front Screw (Qty: 2) **Tighten** 2.5 N·m (22 lb in)
3	Rocker Panel Molding Retainer (Qty: 24) **Procedure** 1. Begin with the six bottom retainers, using a trim-type release tool disengage the retainers from the rocker outer panel reinforcement. 2. Disengage one retainer from the hinge pillar lower reinforcement bracket. 3. Disengage two lower retainers from the bottom edge of the front wing. 4. Disengage the remainder of the retainers from the bodyside outer frame assembly.
4	Rocker Panel Moulding Assembly **Tip** Replace any damaged or broken retainers prior to installing the rocker panel moulding.

© Copyright Chevrolet. All rights reserved

Roof Panel Joint Finish Moulding Replacement

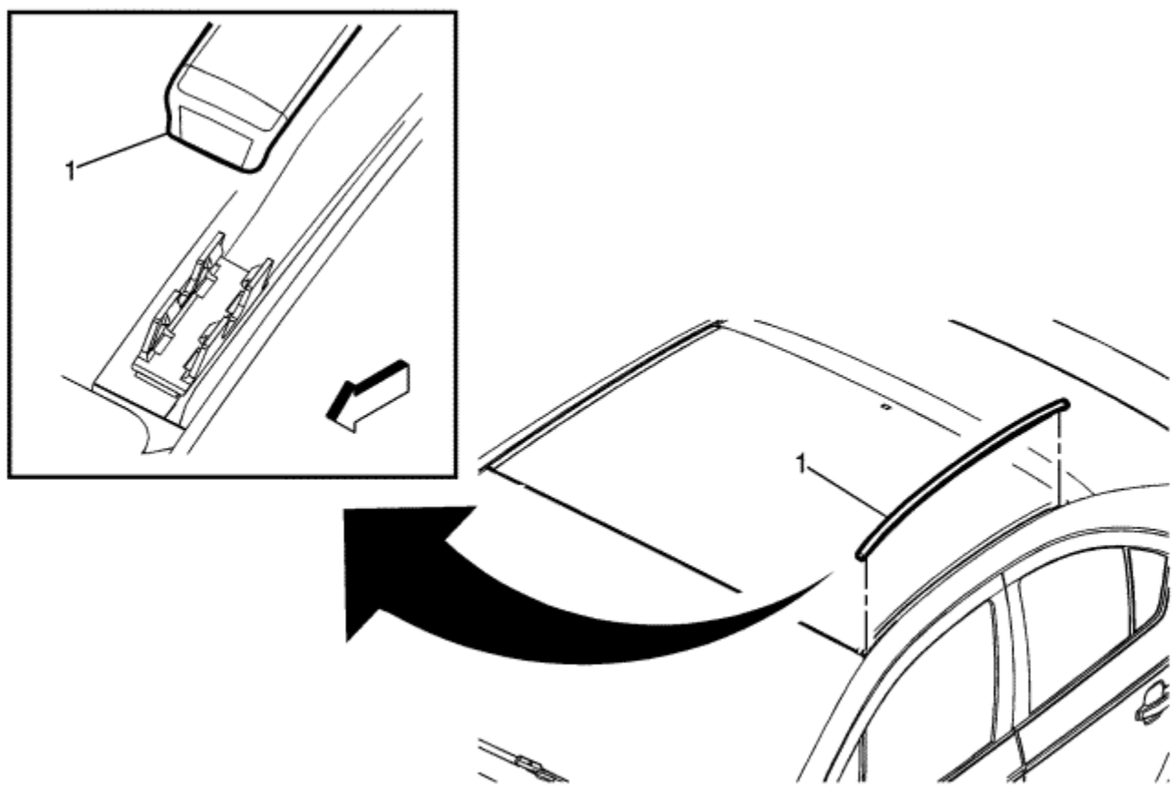

Callout	Component Name
Preliminary Procedure	

Caution: Refer to Exterior Trim Emblem Removal Caution in the Preface section.

1. Begin at the rear edge of the roof panel joint finish moulding and carefully pry the moulding from the roof ditch clip.

2. Pull the moulding forward out of the ditch.
3. Carefully lift the front edge from the second roof ditch clip.
4. Clean any adhesive residue from the ditch using a 50 / 50 mixture by volume of isopropyl alcohol and clean drinkable water.
5. Dry the ditch with a lint free cotton towel.

1	Roof Panel Joint Finish Moulding **Procedure** 1. Insert the front edge of the moulding to the edge of glass. 2. Using a roller-type tool, roll the moulding into the ditch front to rear to ensure full adhesion is made. 3. Tuck the rear lip of the finish moulding to the edge of the rear tailgate panel. 4. Inspect the moulding to roof ditch fit.

© Copyright Chevrolet. All rights reserved

Rear End Spoiler Replacement

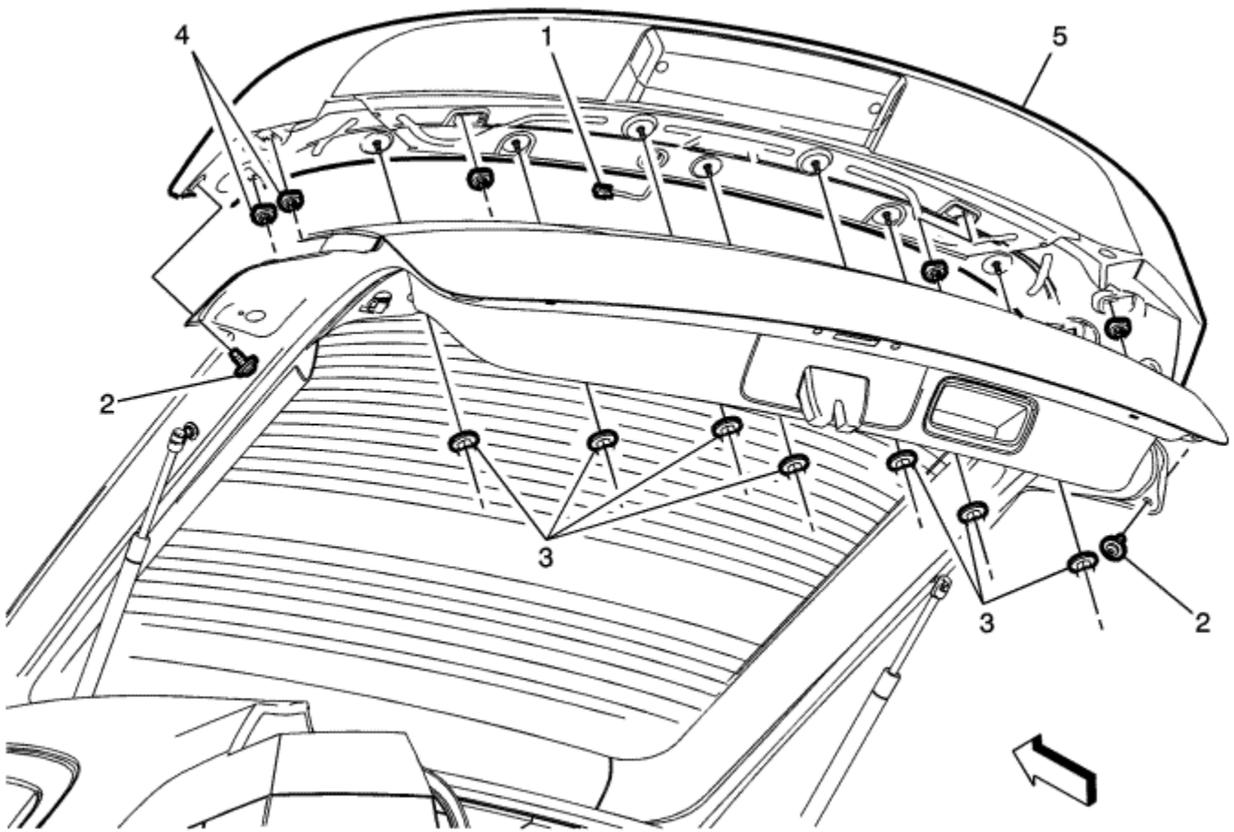

Callout	Component Name
Preliminary Procedures	

1. Open and support the rear tailgate assembly.
2. Remove the liftgate trim finish panel. Refer to Liftgate Lower Trim Finish Panel Replacement
3. Disconnect the high mount brake lamp electrical connector from the tailgate main electrical harness.

1	High Mount Brake Lamp Electrical Connector
2	Rear End Spoiler Screw (Qty: 2) **Caution:** Refer to Fastener Caution in the Preface section. **Tighten** 2.5 N·m (22 lb in)
3	Rear End Spoiler Nut (Qty: 6) **Tighten** 6 N·m (53 lb in)
4	Rear End Spoiler Retainer (Qty: 4) **Tip** Replace any broken retainers and ensure the water management foam gaskets are all in place prior to securing the rear end spoiler to the tailgate.
5	Rear End Spoiler **Procedure** Transfer the high mount brake lamp. Refer to High Mount Brake lamp Replacement

© Copyright Chevrolet. All rights reserved

Special Tools

Illustration	Tool Number/ Description
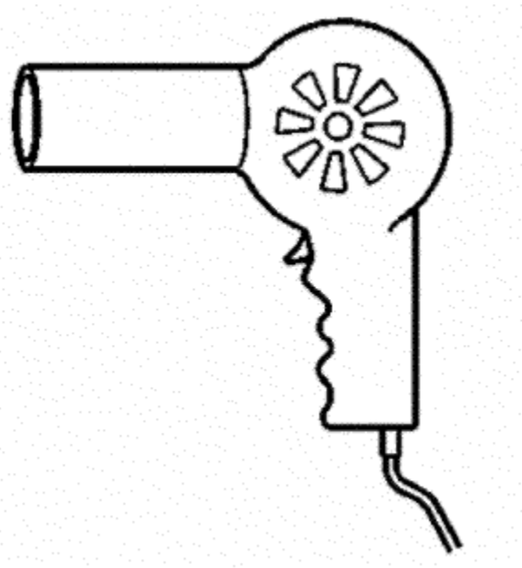	EL 25070 J-25070 Heat Gun - 500-700°F

© Copyright Chevrolet. All rights reserved

Adhesives, Fluids, Lubricants, and Sealers

Application	Type of Material	GM Part Number
GM Vehicle Care Odour Eliminator	Fluids	Refer to Electronic Parts Catalogue.

© Copyright Chevrolet. All rights reserved

Eliminating Unwanted Odors in Vehicles

GM Vehicle Care Odour Eliminator, Refer to Adhesives, Fluids, Lubricants, and Sealers , may control or eliminate odours in the interior and luggage compartment areas of GM vehicles. This non-toxic, biodegradable, odorless product has been shown to greatly reduce or remove the following types of odor:

- Objectionable smells of mold and mildew resulting from vehicle water leaks
- Customer created odors, such as smoke

You may safely use GM Vehicle Care Odor Eliminator on fabrics, vinyl, leather, carpet, and sound deadening materials. You may also induce this product into HVAC modules and instrument panel ducts for the control of non-bacterial related odors.

Note: This product leaves no residual scent and should not be used as an air freshener.

This product may result in the permanent elimination of an odor and may be preferable to customers whose allergies make them sensitive to perfumes. This product may effectively remove odors when directly contacting the odor source. In cases such as water leaks, use this product with diagnostic procedures to first eliminate the primary cause of the odor. Then use further applications on the residual odor to permanently correct the vehicle condition.

How to Use this Product

- Spray GM Vehicle Care Odor Eliminator directly or as an additive with carpet shampoo in steam cleaners.
- Do not use on any interior surface that plain water would deteriorate, because this product will have the same effect. Also avoid letting this product come into contact with vinegar or any acidic substance. Acid-based products will hamper the effectiveness of GM Vehicle Care Odor Eliminator.
- Complete eight page treatment sheets are enclosed within each case of GM Vehicle Care Odour Eliminator. These treatment instructions range from simple vehicle odor elimination to full step by step procedures for odor removal from water leaks.
- Instructions and cautions are printed on the bottle, but additional help is available. If you encounter a persistent or recurring odour, you may call to obtain additional information and usage suggestions.

&#169© Copyright Chevrolet. All rights reserved

Floor Carpet Drying

If the carpet or the pad or insulator is wet, use the following criteria for drying or for replacing the components:

- For a 1-piece carpet assembly bonded to a cotton or a fibre padding, replace the entire assembly.
- For a 2-piece carpet assembly with a cotton or a fibre padding, replace the padding only. While the carpet is out of the vehicle, dry the carpet using the method described below.
- For a 1-piece carpet assembly bonded to a foam padding or attached to a synthetic padding, dry the carpet using the method described below.
- For a 2-piece carpet assembly with a synthetic padding, dry the assembly using the method described below.
- For a 1-piece carpet assembly with a separate cotton or a fibre padding, replace the cotton or fibre padding. While the carpet is out of the vehicle, dry the carpet using the method described below.

Drying Method

1. If you observe puddles of liquid on the carpet face, use a wet vacuum to remove the excess moisture.
2. Blot the face of the carpet with a towel in order to absorb as much moisture as possible.
3. Point a fan at the affected area and air dry the carpet.

&#169© Copyright Chevrolet. All rights reserved

Front Floor Panel Carpet Replacement

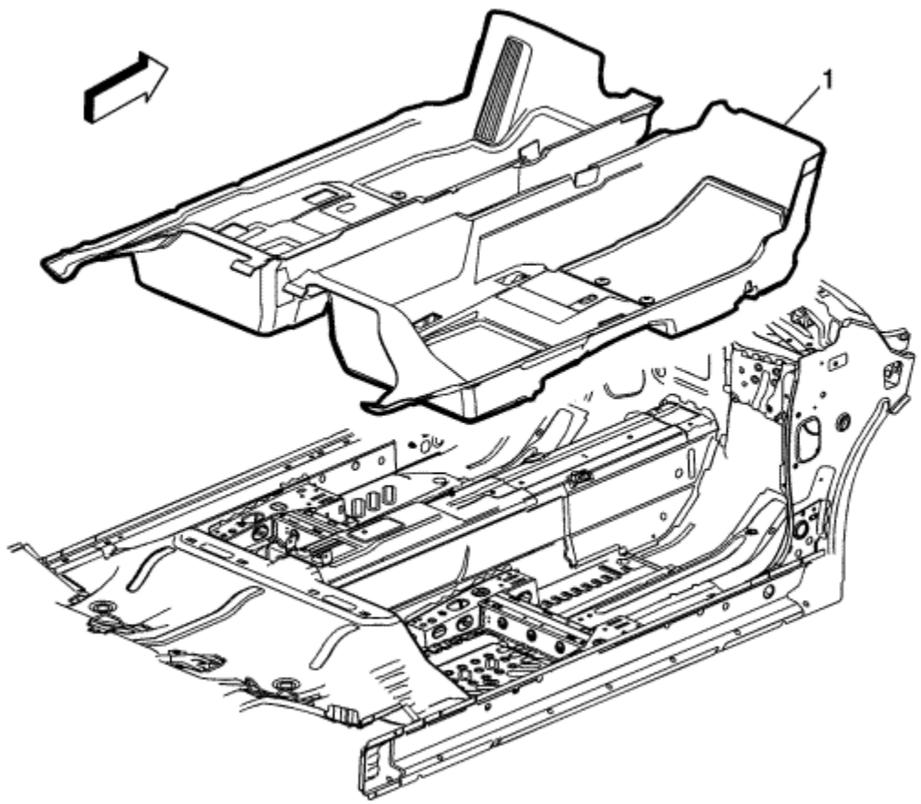

Callout	Component Name
Preliminary Procedures	

1. Remove the front seat. Refer to Driver or Passenger Seat Replacement .
2. Remove the front floor console. Refer to Front Floor Console Replacement .
3. Remove the rear seat cushion. Refer to Rear Seat Cushion Replacement .

4. Remove the front side door opening floor carpet retainer. Refer to Front Side Door Opening Floor Carpet Retainer Replacement .
5. Remove the rear side door opening floor carpet retainer. Refer to Rear Side Door Opening Floor Carpet Retainer Replacement .
6. Remove the center pillar trim panel. Refer to Centre Pillar Trim Panel Replacement .

1	Front Floor Panel Carpet Assembly

© Copyright Chevrolet. All rights reserved

Front Side Door Opening Floor Carpet Retainer Replacement

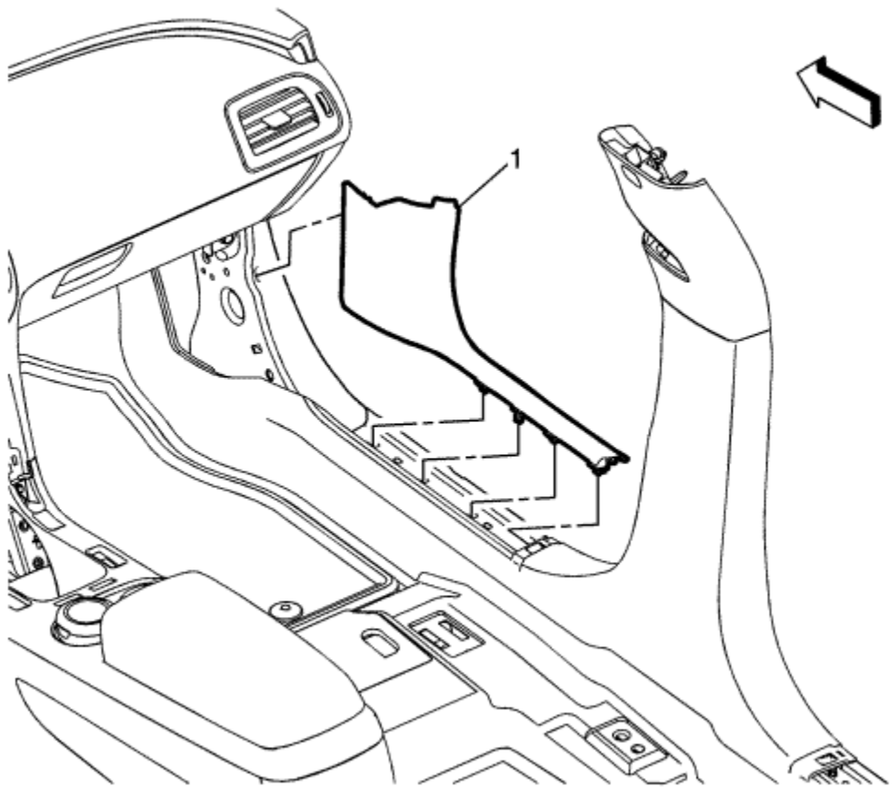

Callout	Component Name
1	Front Side Door Opening Floor Carpet Retainer Assembly **Procedure** Pull up at the rear edge first, then pull rearward to remove.

© Copyright Chevrolet. All rights reserved

Rear Side Door Opening Floor Carpet Retainer Replacement

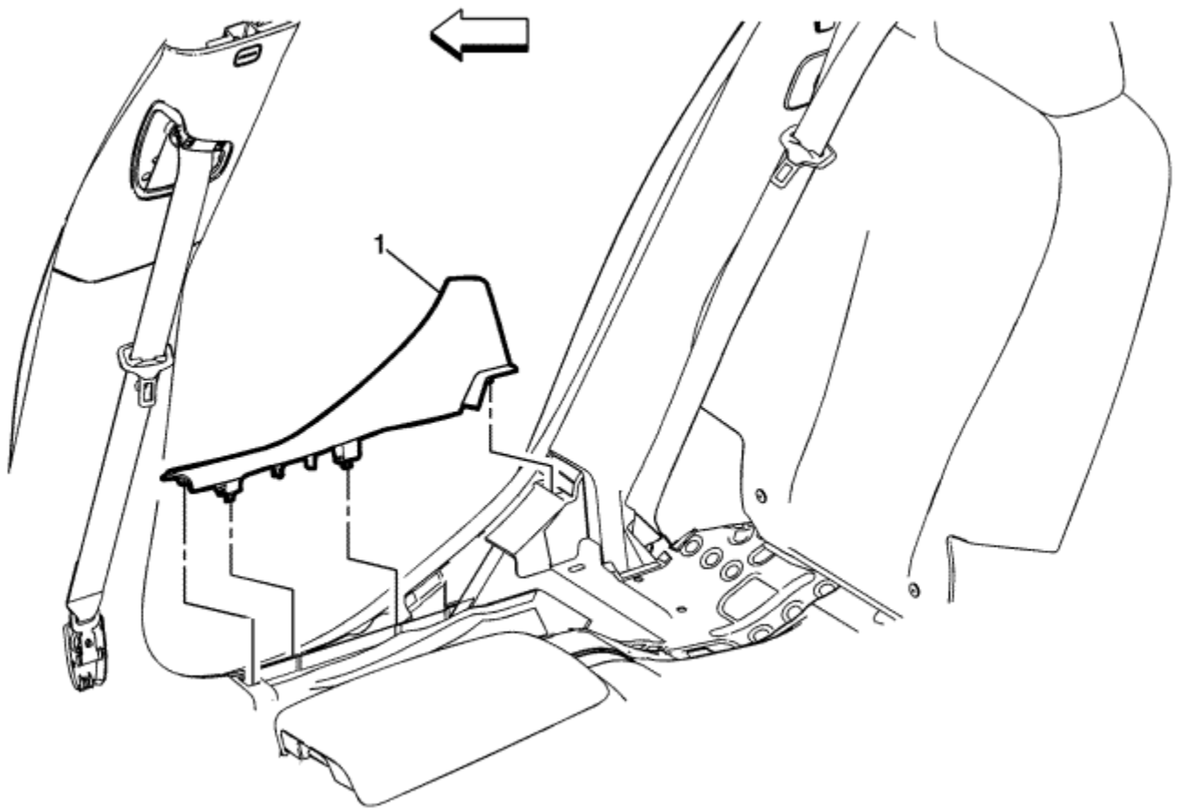

Callout	Component Name
Preliminary Procedure Remove the rear seat cushion. Refer to Rear Seat Cushion Replacement .	
	Rear Side Door Opening Floor Carpet Retainer Assembly

1	**Procedure** Pull up at the front edge first, then pull rearward to remove.

© Copyright Chevrolet. All rights reserved

Headlining Trim Panel Replacement

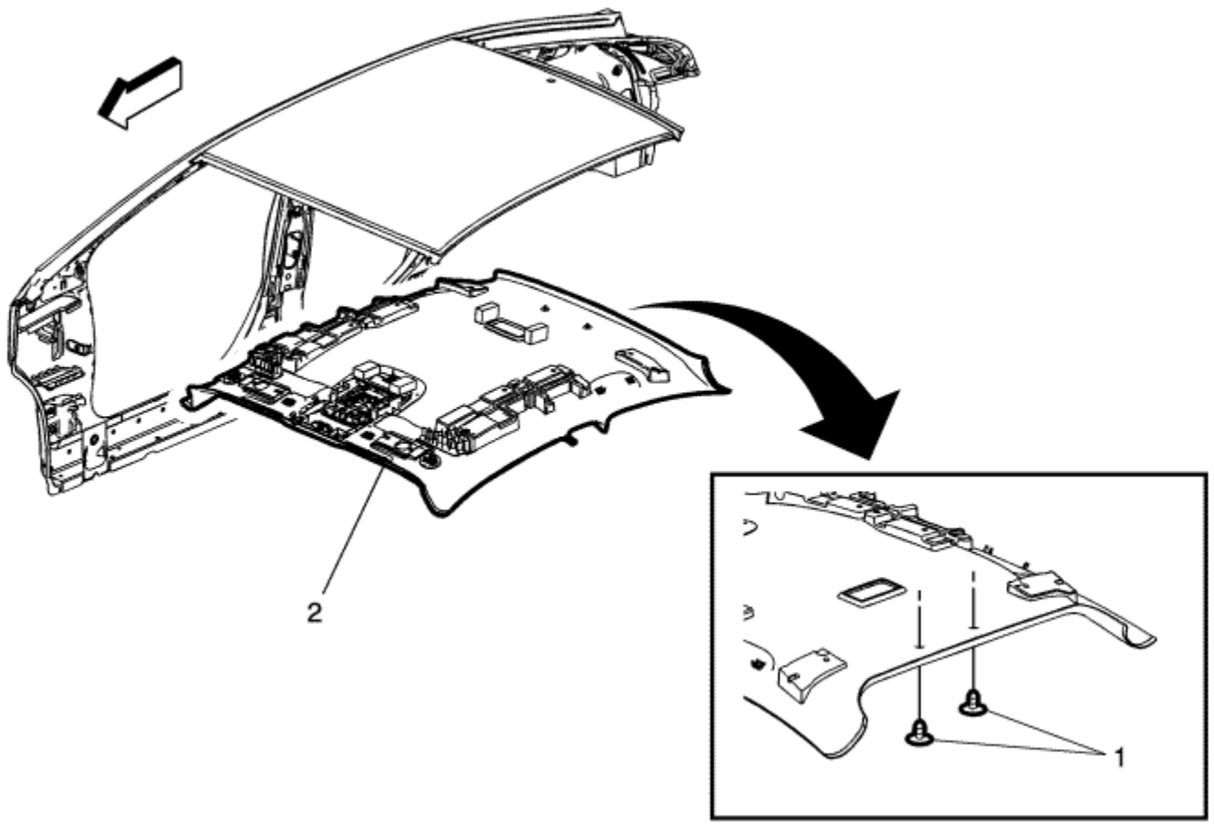

Callout	Component Name
Warning: Do not attempt to repair or alter the head impact energy-absorbing material glued to the headliner or to the garnish trims. If the material is damaged, replace the headliner and/or the garnish trim. Failure to do so could result in personal injury. **Caution:** Use care when working around the head curtain inflator module. Sharp tools may puncture the curtain airbag. If the head curtain inflator module is damaged in any way, it must be replaced.	

Caution: If a vehicle is equipped with a head curtain inflator module ensure that the inflator module and tether are undamaged. If tether or curtain airbag are damaged in any way, they must be replaced.

Preliminary Procedures

1. Disable the roof rail SIR system. Refer to SIR Disabling and Enabling .
2. Fold the rear seats down.
3. Move front seats to full forward position and recline fully.
4. Remove the windshield side garnish molding. Refer to Windscreen Side Garnish Molding Replacement .
5. Remove the sunshade supports. Refer to Sunshade Support Replacement .
6. Remove the sunshade assembly. Refer to Sunshade Replacement .
7. Remove the roof rail rear assist handle assembly. Refer to Roof Rail Rear Assist Handle Replacement .
8. Remove the roof console assembly. Refer to Roof Console Replacement .
9. Remove the center pillar trim panel. Refer to Centre Pillar Trim Panel Replacement .
10. Remove the body lock pillar upper trim panel. Refer to Body Lock Pillar Upper Trim Panel Replacement .
11. Remove the reading lamp. Refer to Reading Lamp Replacement .
12. Remove the inside rearview mirror mount plate cover. Refer to Inside Rearview Mirror Mount Plate Cover Replacement .

1	Headliner Trim Panel Retainer (Qty: 2)
2	Headliner Trim Panel Assembly **Procedure** 1. Prior to removal, note the routing of the wire harness to aid in reassembly and to ensure proper installation. 2. Disconnect the electrical connectors. 3. Removal and installation of the headliner must be completed through the tailgate opening with the aid of an assistant to prevent kinking or damage to the headliner. **Tip** When installing a new headliner, tape any unused connector to the headliner with a high adhesive tape.

© Copyright Chevrolet. All rights reserved

Fastener Tightening Specifications

Application	Specification	
	Metric	English
Front Floor Console Bolts	9 N·m	80 lb in
Instrument Panel Inflatable Restraint Module Fasteners	9 N·m	80 lb in
Instrument Panel Tie Bar to Brake Pedal Bracket Bolts	12 N·m	9 lb ft
Instrument Panel Tie Bar to Front Floor Tunnel Panel Nuts	22 N·m	17 lb ft
Instrument Panel Tie Bar to Vehicle Body Bolts	22 N·m	17 lb ft

© Copyright Chevrolet. All rights reserved

Instrument Panel Lower Trim Panel Insulator Replacement

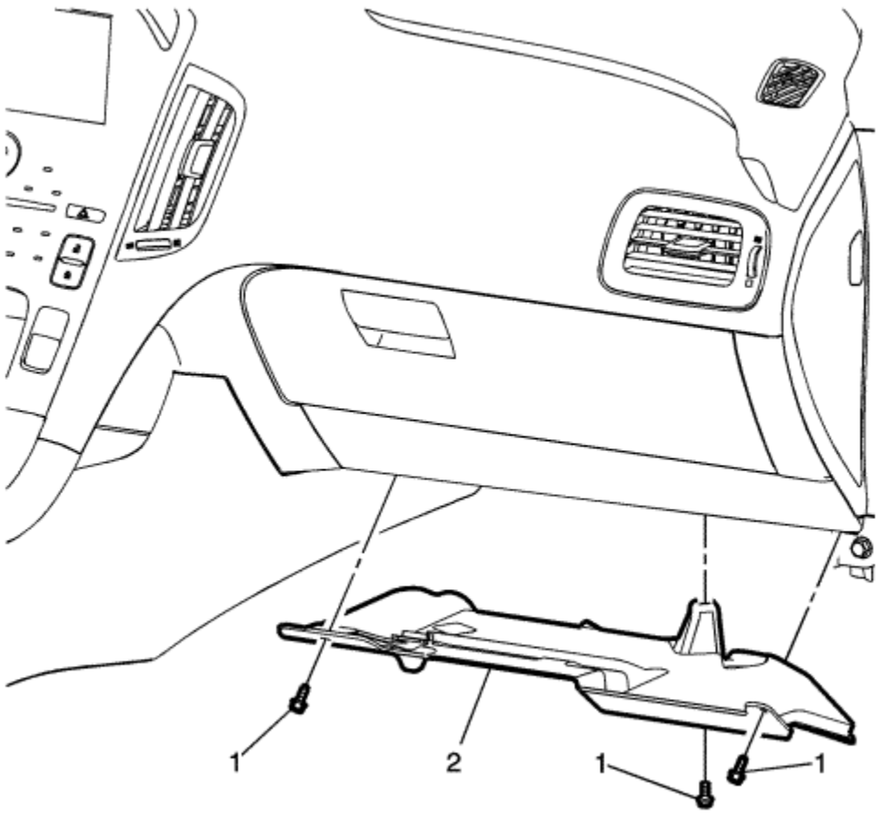

Callout	Component Name
Warning: Refer to SIR Warning in the Preface section. **Preliminary Procedure** Disable the SIR system. Refer to SIR Disabling and Enabling .	

1	Instrument Panel Lower Trim Panel Insulator Fastener (Qty: 3) **Caution:** Refer to Fastener Caution in the Preface section.
2	Instrument Panel Lower Trim Panel Insulator Assembly

© Copyright Chevrolet. All rights reserved

Steering Column Opening Lower Filler Replacement

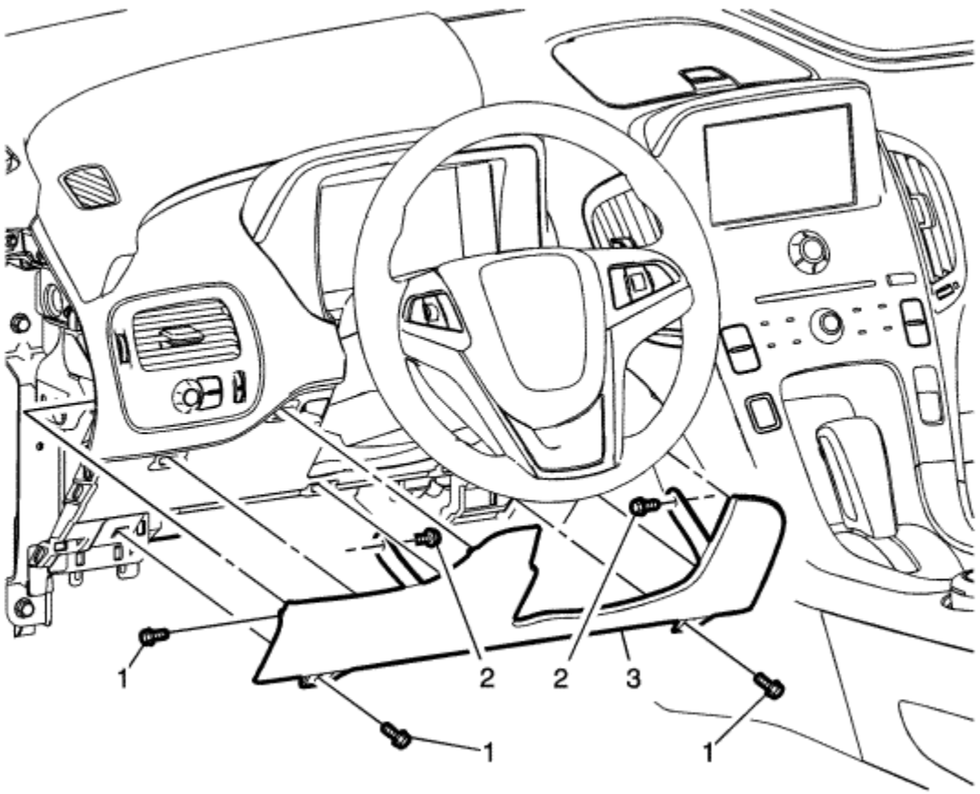

Callout	Component Name
Preliminary Procedures 1. Remove the left instrument panel side trim panel. Refer to Instrument Panel Side Trim Panel Replacement . 2. Remove the left instrument panel lower inflatable restraint module. Refer to Inflatable Restraint Instrument Panel Lower Module Replacement - Driver Side .	

1	Instrument Panel Steering Column Opening Lower Filler Fastener (Qty: 3) **Caution:** Refer to Fastener Caution in the Preface section.
2	Instrument Panel Steering Column Opening Lower Filler Tether Fastener (Qty: 2)
3	Instrument Panel Steering Column Opening Lower Filler Assembly **Procedure** Use a flat bladed plastic trim tool to aid in the removal of the lower filler assembly from the instrument panel.

© Copyright Chevrolet. All rights reserved

Instrument Panel Side Trim Panel Replacement

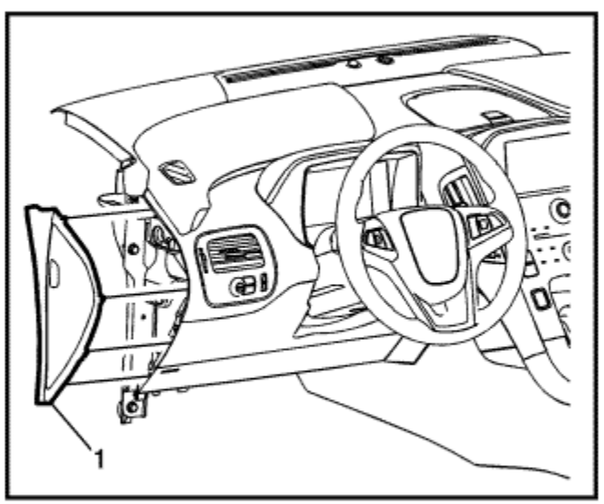

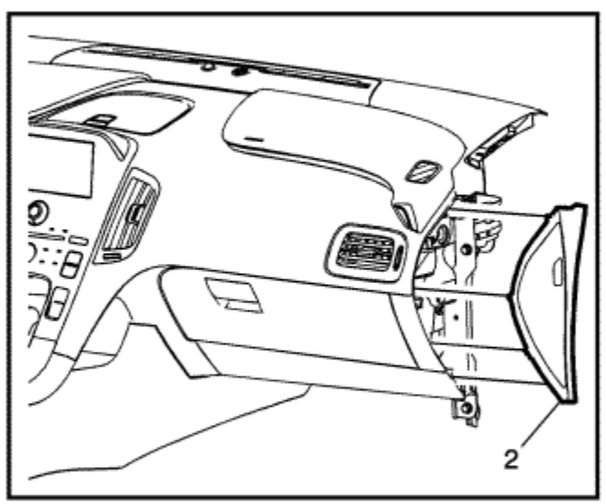

Callout	Component Name
1	Instrument Panel Side Trim Panel - Left **Procedure** Use a flat bladed plastic trim tool to aid in the removal of the side trim panel from the instrument panel assembly.

	Instrument Panel Side Trim Panel - Right
2	**Procedure** Use a flat bladed plastic trim tool to aid in the removal of the side trim panel from the instrument panel assembly.

© Copyright Chevrolet. All rights reserved

Instrument Panel Upper Trim Panel Replacement

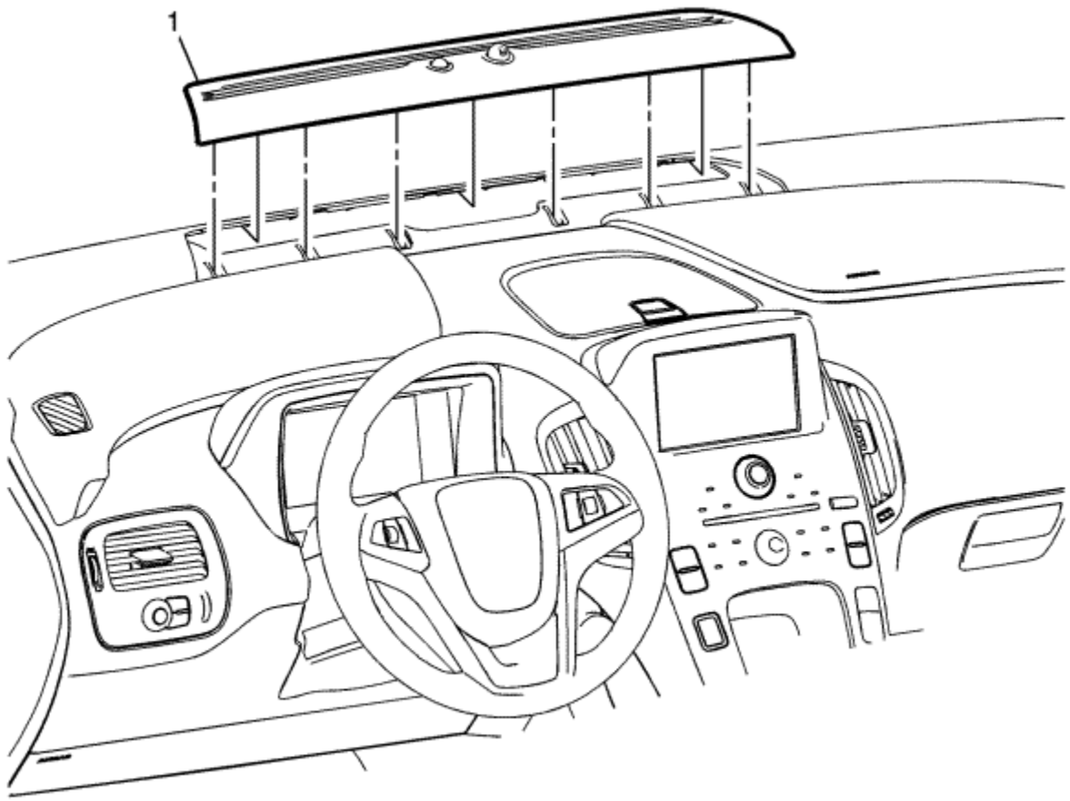

Callout	Component Name
1	Instrument Panel Upper Trim Panel Assembly **Procedure** 1. Use a flat bladed plastic trim tool to aid in the removal of the upper trim panel from the instrument panel assembly.

	2. Disconnect the electrical connections. 3. When replacing the upper trim panel assembly, transfer all necessary components.

© Copyright Chevrolet. All rights reserved

Instrument Panel Cluster Trim Plate Cover Replacement

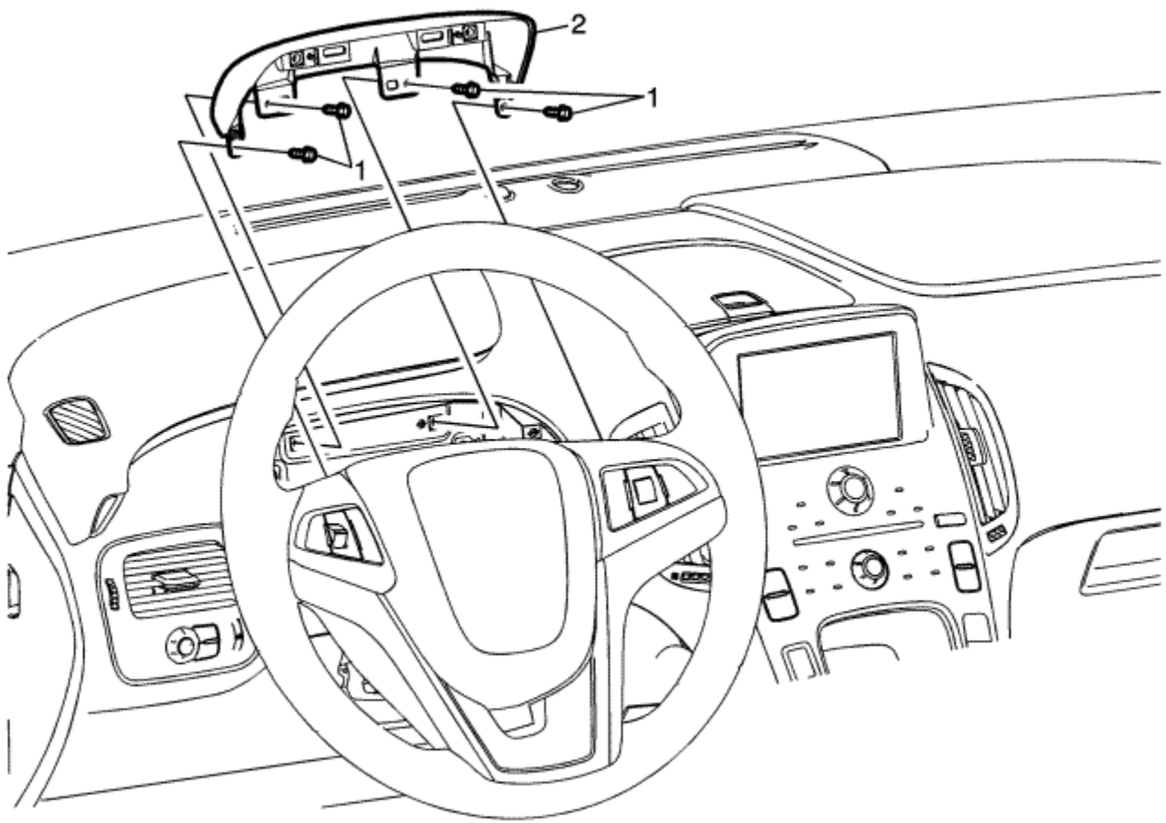

Callout	Component Name
Preliminary Procedures 1. Remove the instrument panel cluster trim plate. Refer to Instrument Panel Cluster Trim Plate Replacement . 2. Remove the instrument cluster assembly. Refer to Instrument Cluster Replacement .	

1	Instrument Panel Cluster Trim Plate Cover Fasteners (Qty: 4) **Caution:** Refer to Fastener Caution in the Preface section.
2	Instrument Panel Cluster Trim Plate Cover Assembly

© Copyright Chevrolet. All rights reserved

Instrument Panel Cluster Trim Plate Replacement

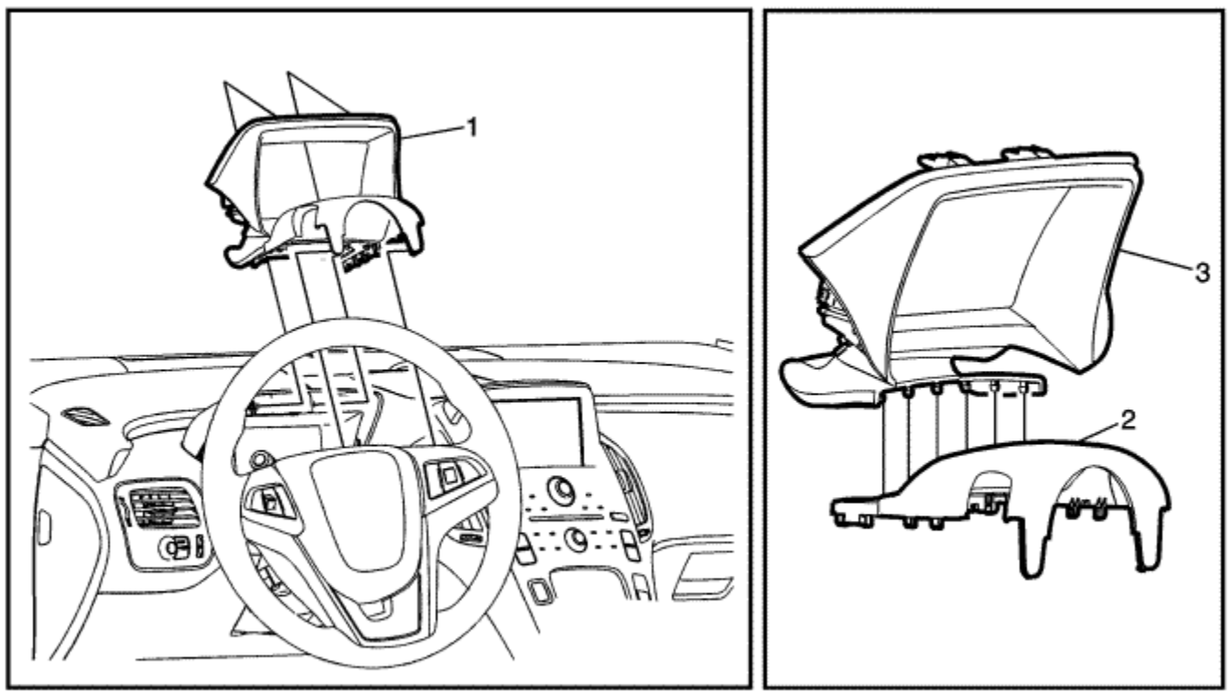

Callout	Component Name
Note: The instrument panel cluster trim plate and the steering column upper trim cover must be removed as an assembly, do not attempt to separate. **Preliminary Procedures** Disable the SIR system. Refer to SIR Disabling and Enabling	

1	Instrument Panel Cluster Trim Plate and Steering Column Upper Trim Cover Assembly **Procedures** 1. Turn the steering wheel to the left in order to release the left tab securing the upper trim cover to the lower trim cover. 2. Release the retainers along the left side of the upper trim cover securing it to the lower trim cover. 3. While holding the left side of the trim cover up, turn the steering wheel enough to release the right retainer tab securing the right side of the upper trim cover to the lower trim cover. 4. Release the retainers along the right side of the upper trim cover securing it to the lower trim cover. 5. Grasp the instrument panel cluster trim plate and steering column upper trim cover assembly and pull rearward releasing the clips securing the assembly to the instrument panel.
2	Steering Column Upper Trim Cover
3	Instrument Panel Cluster Trim Plate Assembly **Procedure** When replacing either the instrument panel cluster trim plate or the steering column upper trim cover snap the two pieces together prior to installing them into the vehicle.

© Copyright Chevrolet. All rights reserved

Instrument Panel Upper Outer Trim Panel Replacement - Right Side

Removal Procedure

Warning: Refer to SIR Warning in the Preface section.

1. Disable the SIR system. Refer to SIR Disabling and Enabling .
2. Remove the instrument panel lower compartment. Refer to Instrument Panel Lower Compartment Replacement .
3. Disconnect the electrical connection to the instrument panel inflatable restraint module.

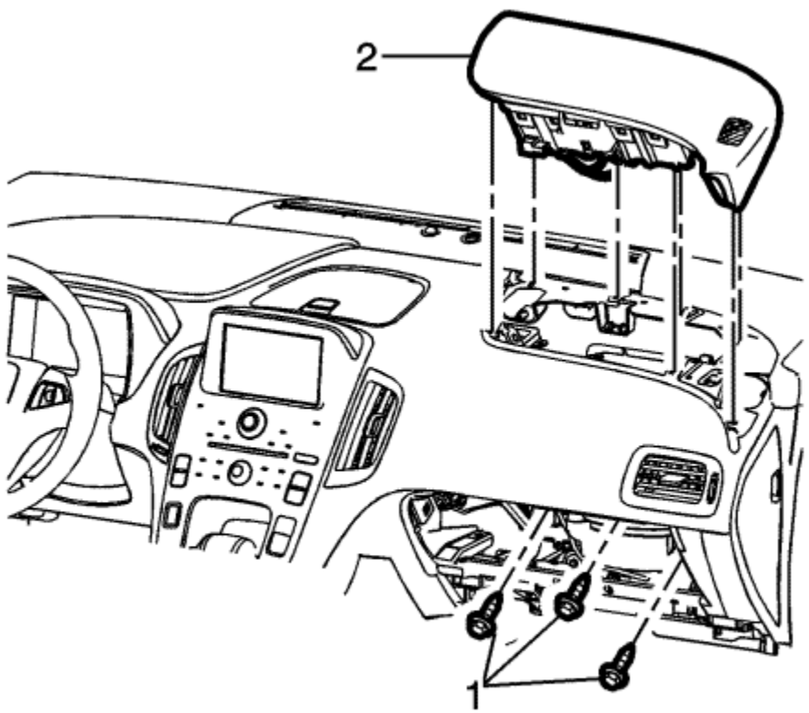

4. Remove the 3 bolts (1) securing the instrument panel inflatable restraint module to the instrument panel tie bar assembly.

5. Use a flat bladed plastic trim tool to aid in the removal of the upper outer trim panel from the instrument panel assembly.

   Note: When the instrument panel inflatable restraint module is to be replaced, both the inflatable restraint module and the upper outer trim panel needs to be purchased.

6. When the instrument panel inflatable restraint is to be reused follow the steps outlined below.

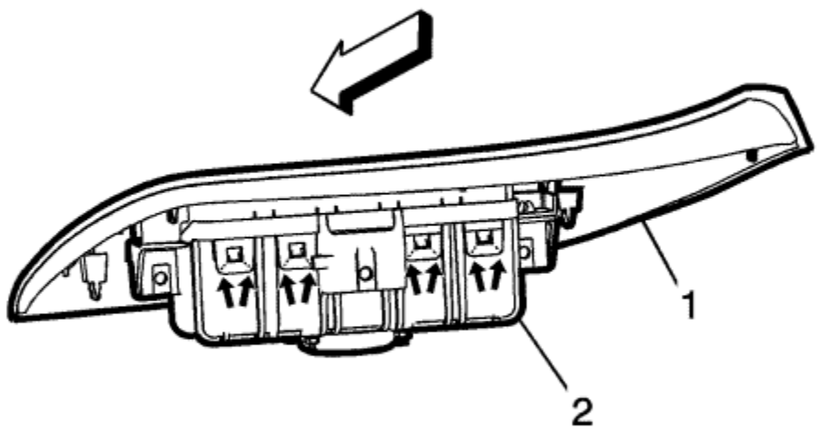

- Using a suitable sharp bladed tool, carefully cut the four tabs located on the rear side of the instrument panel upper outer trim panel.

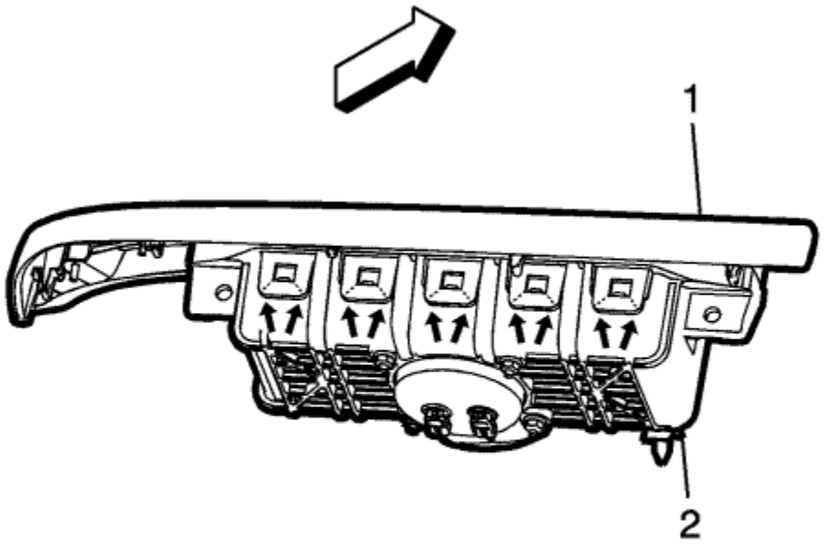

- Using a suitable sharp bladed tool, carefully cut the five tabs located on the front side of the instrument panel upper outer trim panel.
- Remove the inflatable restraint module from the upper outer trim panel.

Installation Procedure

1. Install the instrument panel inflatable restraint module into the instrument panel upper outer trim panel. Refer to Instrument Panel Inflatable Restraint Module Replacement .

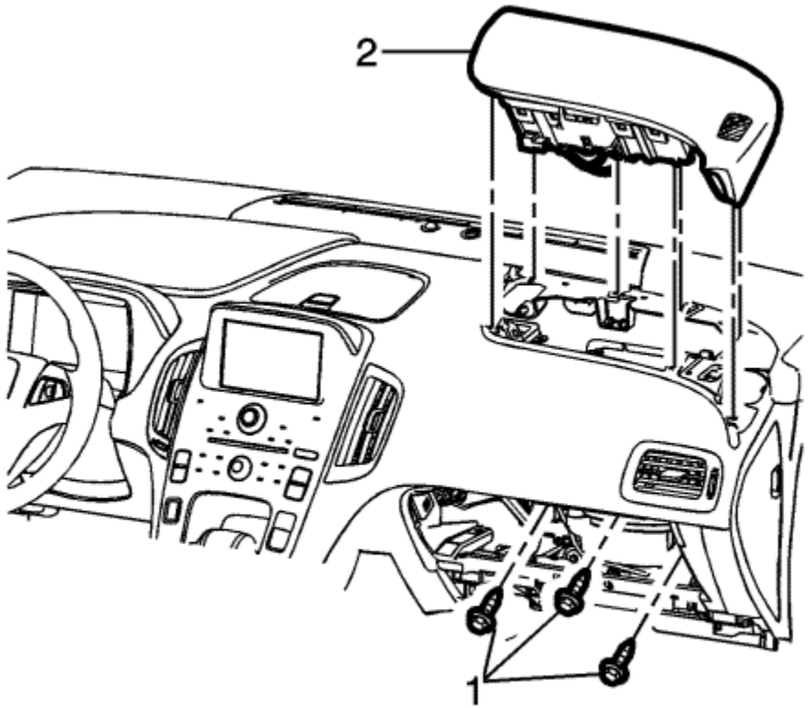

2. Position the instrument panel upper outer trim panel assembly to the opening in the instrument panel assembly.
3. Push the trim panel downward ensuring the retainer tabs secure the trim panel to the instrument panel assembly.

   Caution: Refer to Fastener Caution in the Preface section.

4. Install the 3 bolts (1) securing the instrument panel inflatable restraint module to the instrument panel tie bar assembly and tighten to **9 N·m (80 lb in)**.
5. Connect the electrical connection to the instrument panel inflatable restraint module.
6. Install the instrument panel lower compartment. Refer to Instrument Panel Lower Compartment Replacement .
7. Enable the SIR system. Refer to SIR Disabling and Enabling .

&#169© Copyright Chevrolet. All rights reserved

Instrument Panel Upper Outer Trim Panel Replacement - Left Side

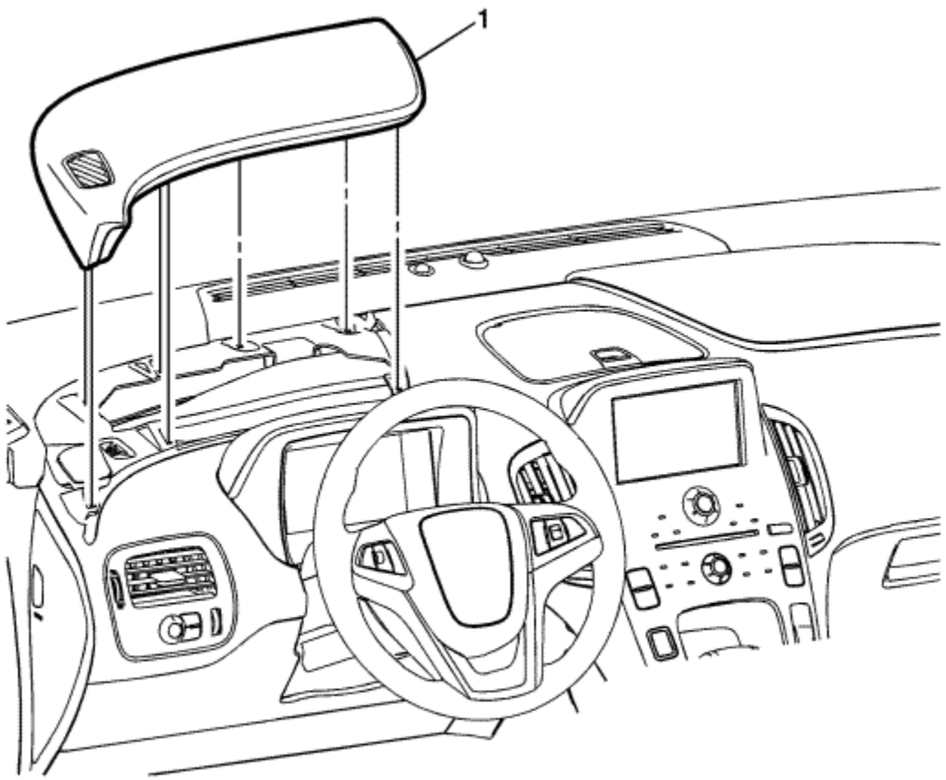

Callout	Component Name
1	Instrument Panel Upper Outer Trim Panel Assembly **Procedure** 1. Use a flat bladed plastic trim tool to aid in the removal of the upper outer trim panel from the instrument panel assembly.

	2. When replacing the upper outer trim panel assembly, transfer all necessary components.

© Copyright Chevrolet. All rights reserved

Instrument Panel Lower Extension Trim Panel Replacement

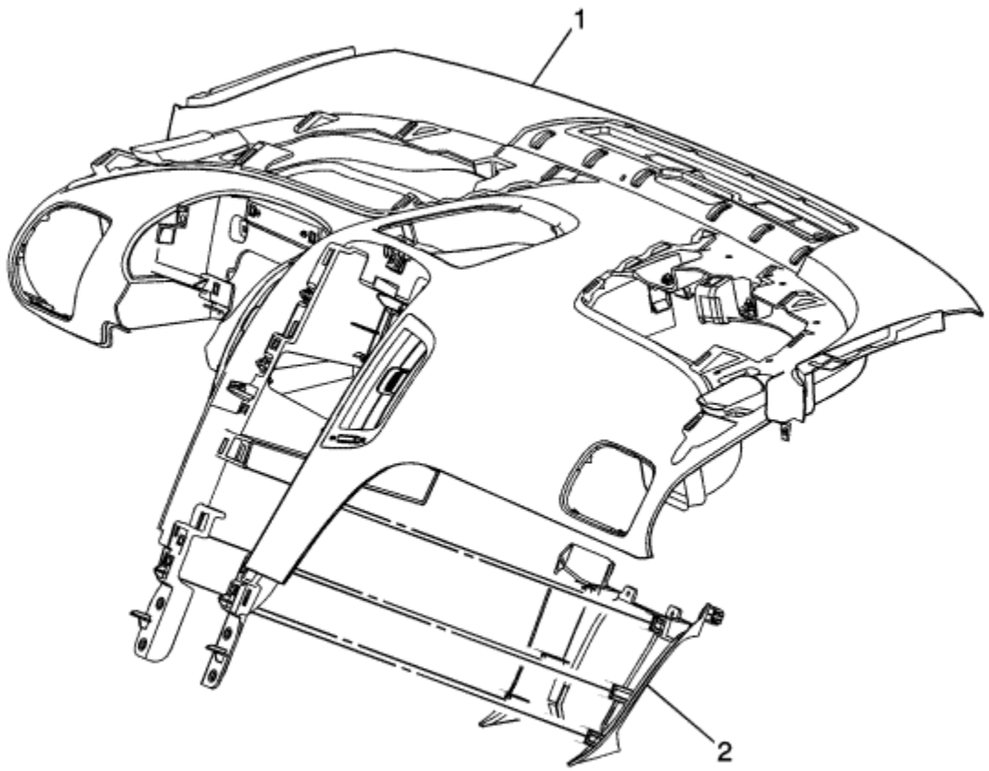

Callout	Component Name
1	Instrument Panel Upper Trim Pad Retainer Assembly Refer to Upper Trim Pad Retainer Replacement .
	Instrument Panel Lower Extension Trim Panel

2	**Procedure** Grasp the extension panel and pull it away from the retainer assembly releasing the clips securing the extension panel to the retainer assembly.

© Copyright Chevrolet. All rights reserved

Upper Trim Pad Retainer Replacement

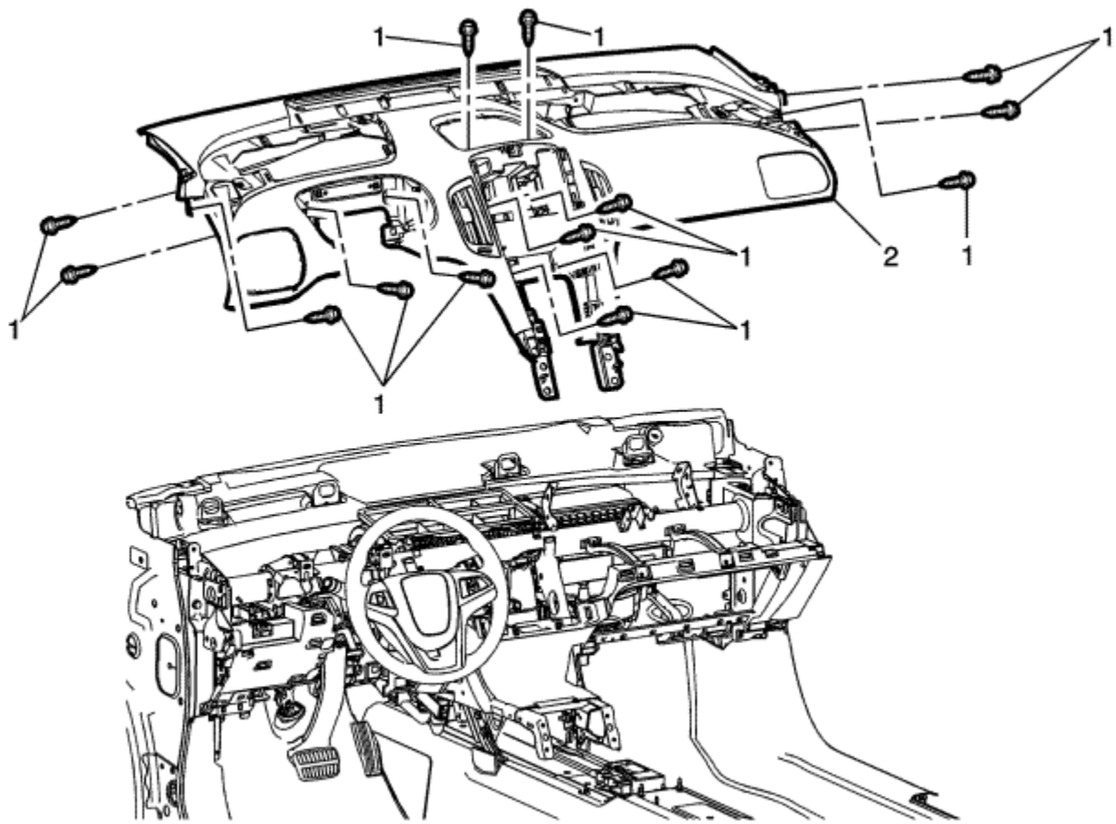

Callout	Component Name
Preliminary Procedures	

1. Disable the SIR System. Refer to SIR Disabling and Enabling .
2. Remove the right and left windscreen side garnish mouldings. Refer to Windscreen Side Garnish Molding Replacement .
3. Remove the right and left instrument panel lower inflatable restraints. Refer to Inflatable Restraint Instrument Panel Lower Module Replacement - Passenger Side and

Inflatable Restraint Instrument Panel Lower Module Replacement - Driver Side .

4. Remove the right and left instrument panel upper outer trim panels. Refer to Instrument Panel Upper Outer Trim Panel Replacement - Right Side and Instrument Panel Upper Outer Trim Panel Replacement - Left Side .
5. Remove the instrument panel upper centre compartment. Refer to Instrument Panel Upper Centre Compartment Replacement .
6. Remove the instrument panel upper trim panel. Refer to Instrument Panel Upper Trim Panel Replacement .
7. Remove the instrument panel cluster. Refer to Instrument Cluster Replacement .
8. Remove the left instrument panel side trim panel. Refer to Instrument Panel Side Trim Panel Replacement .
9. Remove the transmission control assembly. Refer to Transmission Control Replacement .
10. Remove the radio assembly. Refer to Radio Replacement .
11. Remove the HVAC remote control. Refer to Heater and Air Conditioning Remote Control Replacement .
12. Remove the right and left instrument panel outer air outlets. Refer to Instrument Panel Outer Air Outlet Replacement - Left Side and Instrument Panel Outer Air Outlet Replacement - Right Side .

1	Instrument Panel Upper Trim Pad Retainer Fasteners (Qty: 14) **Caution:** Refer to Fastener Caution in the Preface section.
2	Instrument Panel Upper Trim Pad Retainer Assembly **Procedures** 1. Prior to removing the instrument panel upper trim pad retainer note the location and routing of the instrument panel wiring harness to ensure proper reinstallation. 2. With the aid of an assistant remove the instrument panel upper trim pad retainer from the vehicle. 3. When replacing the instrument panel upper trim pad retainer assembly, transfer all necessary components.

© Copyright Chevrolet. All rights reserved

Lower Trim Pad Retainer Replacement - Inner

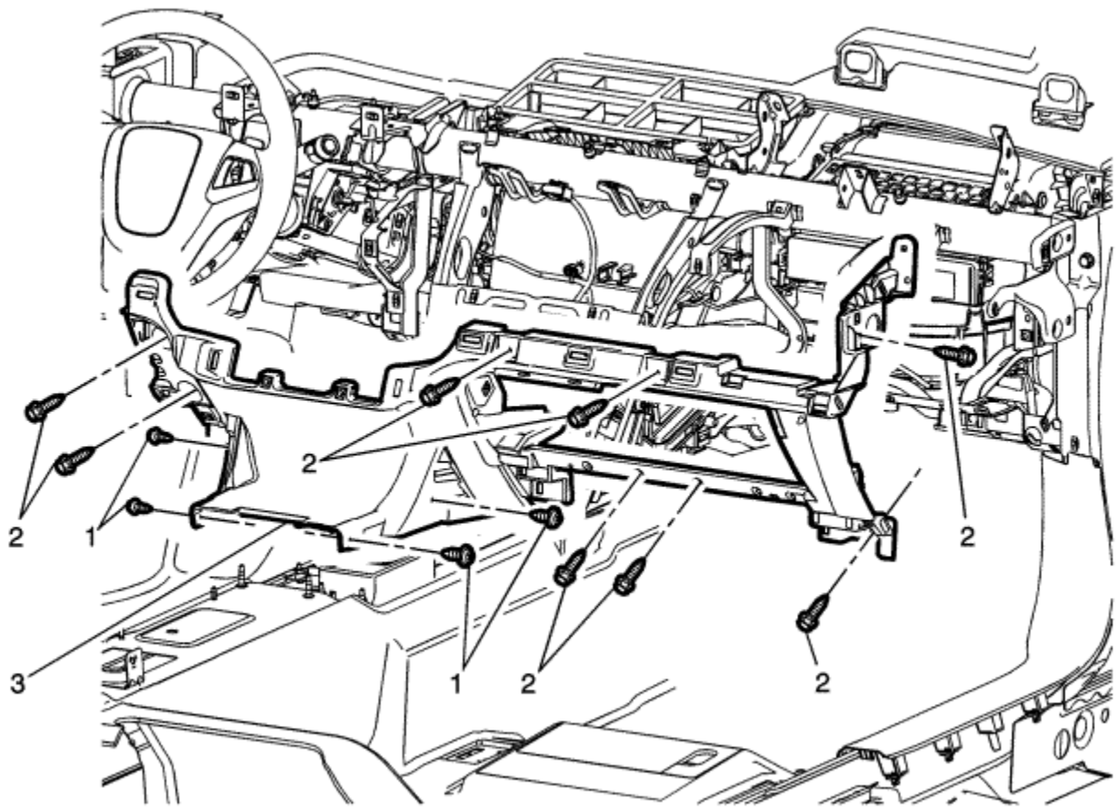

Callout	Component Name
Preliminary Procedure Remove the instrument panel upper trim pad retainer assembly. Refer to Upper Trim Pad Retainer Replacement .	
1	Instrument Panel Lower Trim Pad Retainer Screw (Qty: 4)

	Caution: Refer to Fastener Caution in the Preface section.
2	Instrument Panel Lower Trim Pad Retainer Fasteners (Qty: 8)
3	Instrument Panel Lower Trim Pad Retainer Assembly **Procedures** 1. Prior to removing the instrument panel lower trim pad retainer, note the location and routing of the instrument panel wiring harness to ensure proper reinstallation. 2. Remove the instrument panel lower trim pad retainer from the vehicle. 3. When replacing the instrument panel lower trim pad retainer assembly, transfer all necessary components.

© Copyright Chevrolet. All rights reserved

Lower Trim Pad Retainer Replacement - Outer

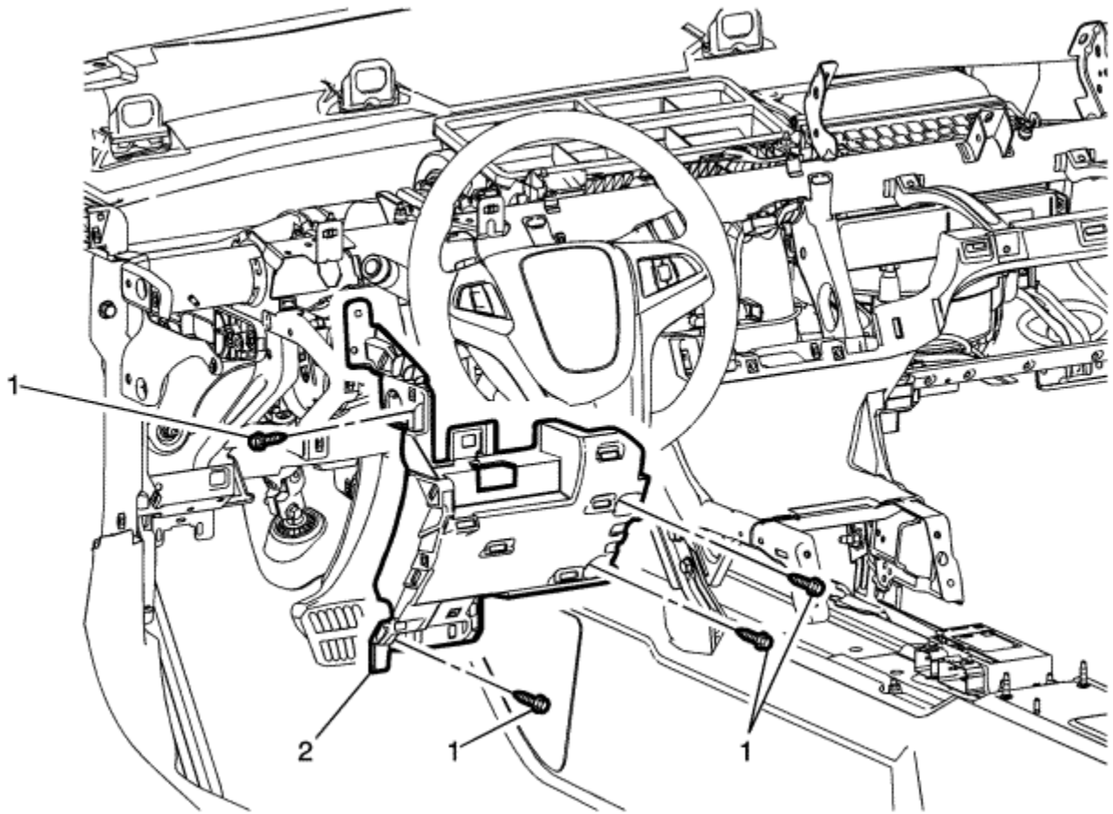

Callout	Component Name
Preliminary Procedure Remove the instrument panel upper trim pad retainer assembly. Refer to Upper Trim Pad Retainer Replacement .	
1	Instrument Panel Lower Trim Pad Retainer Fasteners (Qty: 4)

	Caution: Refer to Fastener Caution in the Preface section.
2	Instrument Panel Lower Trim Pad Retainer Assembly **Procedures** 1. Prior to removing the instrument panel lower trim pad retainer, note the location and routing of the instrument panel wiring harness to ensure proper reinstallation. 2. When replacing the instrument panel lower trim pad retainer assembly, transfer all necessary components.

© Copyright Chevrolet. All rights reserved

Instrument Panel Upper Centre Compartment Replacement

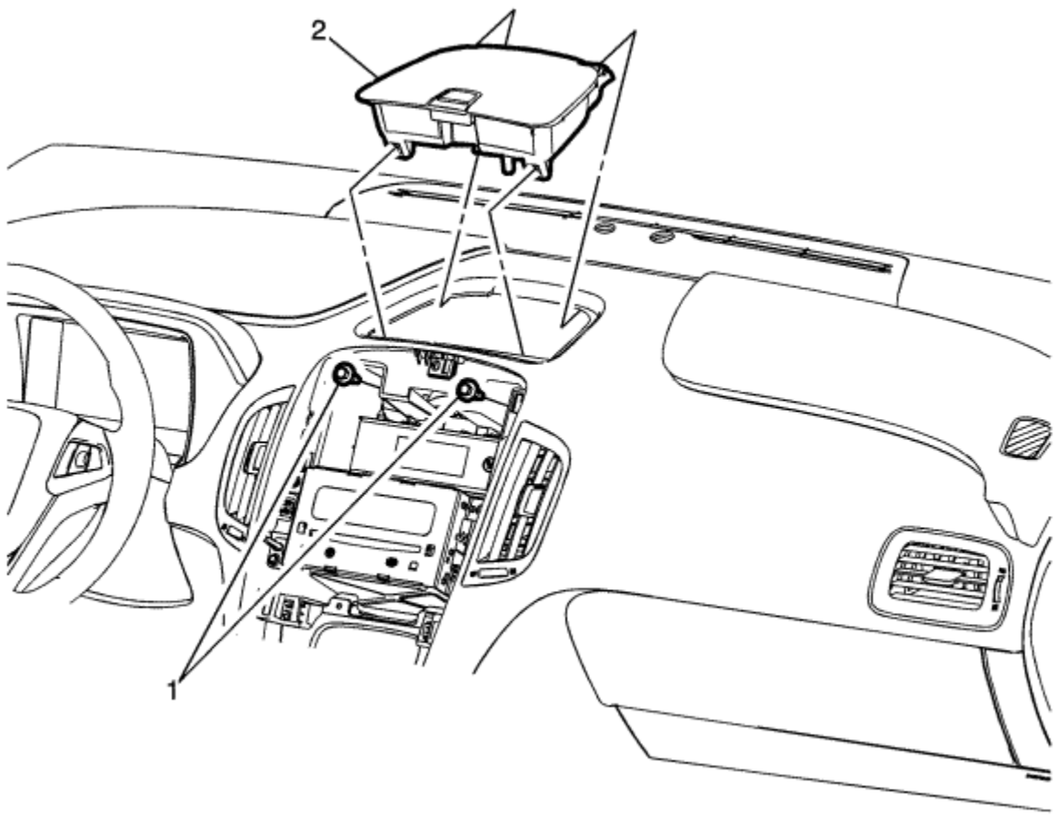

Callout	Component Name
Preliminary Procedure Remove the radio control assembly. Refer to Radio Control Assembly Replacement .	
1	Instrument Panel Upper Centre Compartment Fasteners (Qty: 2)

	Caution: Refer to Fastener Caution in the Preface section.
2	Instrument Panel Upper Centre Compartment Assembly **Procedures** 1. Disconnect the electrical connections. 2. When replacing the upper centre compartment, transfer all necessary components.

© Copyright Chevrolet. All rights reserved

Instrument Panel Lower Compartment Replacement

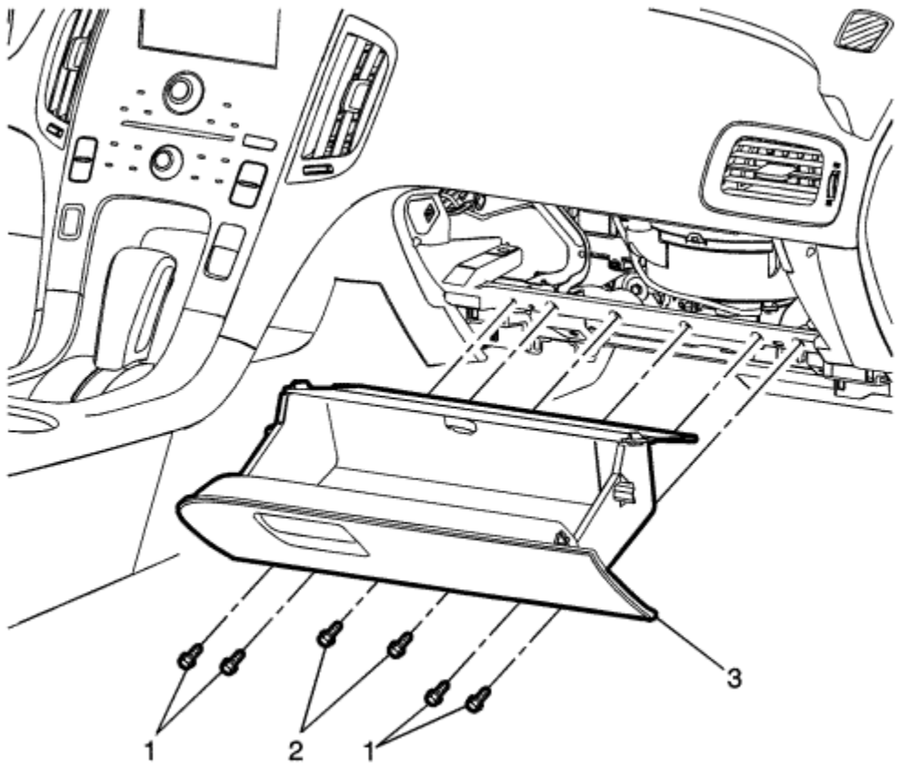

Callout	Component Name
Preliminary Procedure Remove the right lower instrument panel inflatable restraint module. Refer to Inflatable Restraint Instrument Panel Lower Module Replacement - Passenger Side .	
1	Instrument Panel Lower Compartment Fasteners (Qty: 4)

	Caution: Refer to Fastener Caution in the Preface section.
2	Instrument Panel Lower Compartment Tether Fasteners (Qty: 2)
3	Instrument Panel Lower Compartment Assembly **Procedures** 1. Disconnect the instrument panel compartment dampener. 2. When replacing the compartment assembly, transfer all necessary components.

© Copyright Chevrolet. All rights reserved

Instrument Panel Compartment Door Dampener Replacement

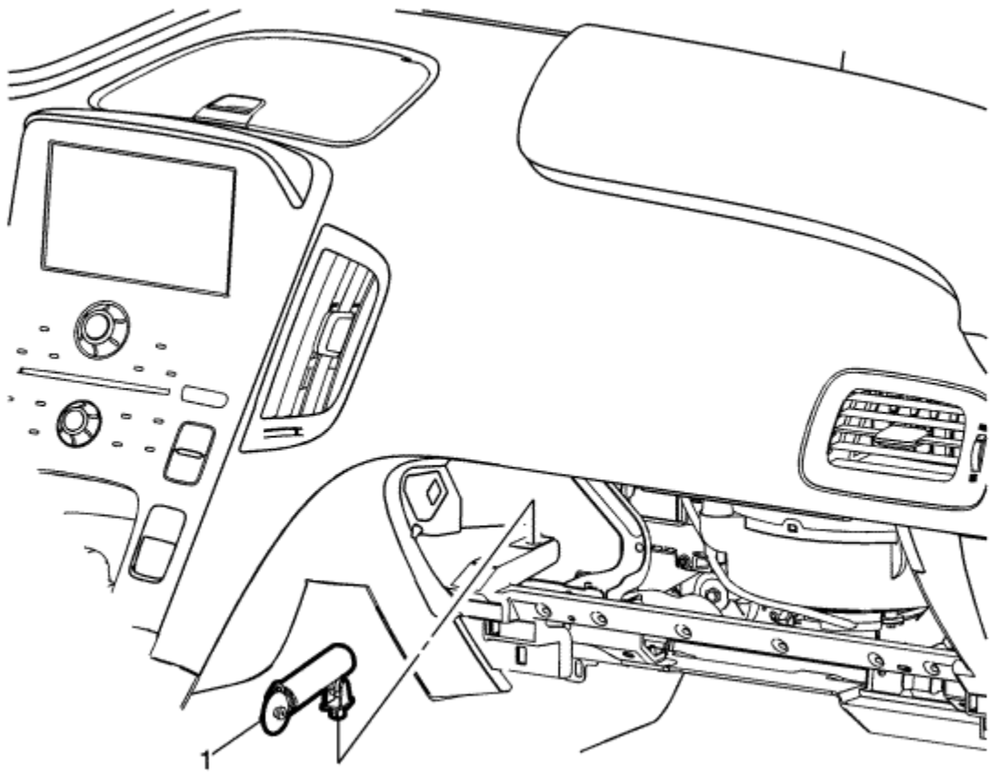

Callout	Component Name
Preliminary Procedure Remove the instrument panel lower compartment assembly. Refer to Instrument Panel Lower Compartment Replacement .	
	Instrument Panel Compartment Door Dampener

1	**Procedure** Unsnap the dampener from the instrument panel assembly.

© Copyright Chevrolet. All rights reserved

Instrument Panel Tie Bar Replacement

Table 1: Preliminary Procedures
Table 2: Instrument Panel Electrical Centres Service Positioning
Table 3: Communication Interface Module Bracket Service Positioning
Table 4: Instrument Panel Tie Bar

Preliminary Procedures

Note: All procedures must be followed in the order shown to be able to remove the instrument panel tie bar assembly.

Preliminary Procedures

1. Remove the inner and outer instrument panel lower trim pad retainers. Refer to Lower Trim Pad Retainer Replacement : Outer → Inner .
2. Remove the instrument panel lower trim panel insulator. Refer to Instrument Panel Lower Trim Panel Insulator Replacement .
3. Remove the right and left front side door opening floor carpet retainers. Refer to Front Side Door Opening Floor Carpet Retainer Replacement .
4. Remove the steering column assembly. Refer to Steering Column Replacement .
5. Release the bonnet latch release handle from the tie bar assembly and position out of the way.
6. Release the data link connector from the instrument panel tie bar assembly, and position out of the way.

Instrument Panel Electrical Centres Service Positioning

Note: The instrument panel electrical centres are an integral part of the instrument panel wiring harness and are not a separate serviceable item.

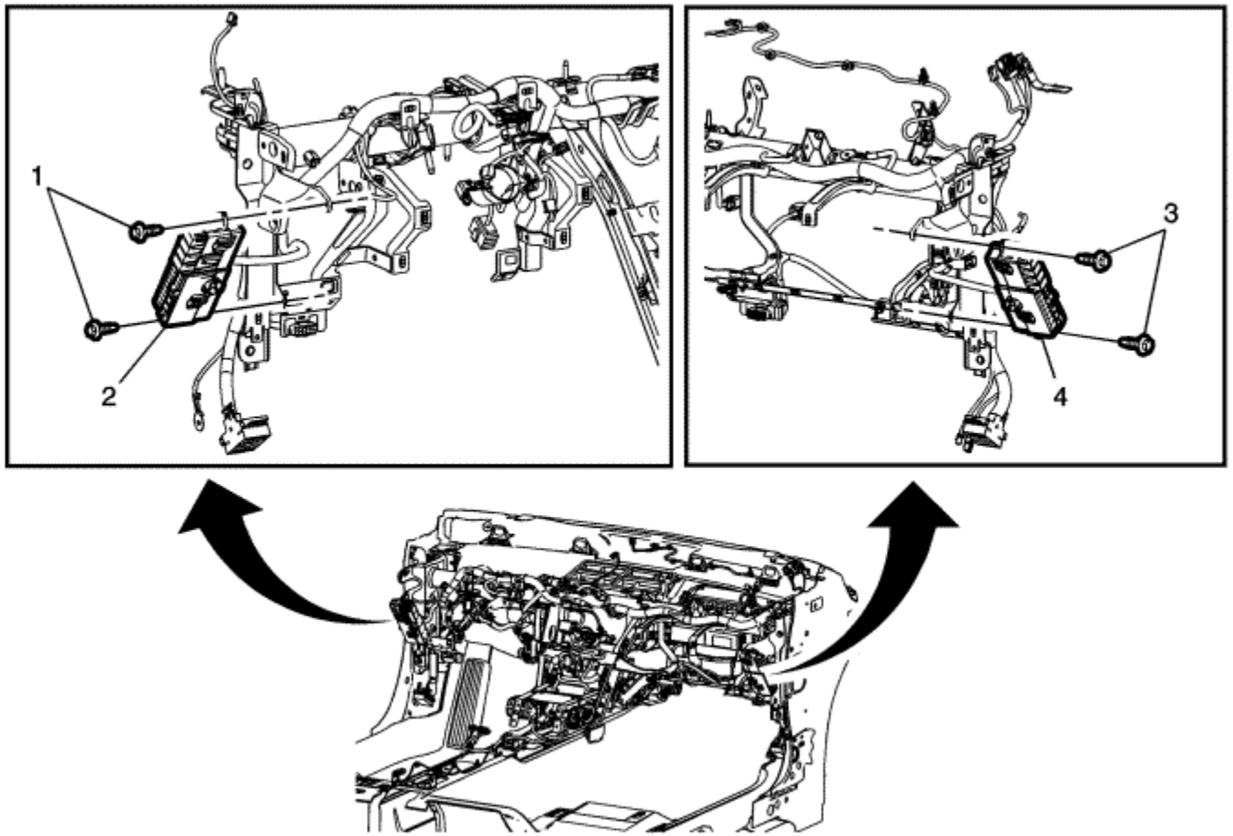

Instrument Panel Electrical Centres Service Positioning

Callout	Component Name
1	Right Instrument Panel Electrical Centre Fasteners (Qty: 2) **Caution:** Refer to Fastener Caution in the Preface section.
2	Right Instrument Panel Electrical Centre Assembly **Procedure** Position the electrical centre assembly out of the way.
3	Left Instrument Panel Electrical Centre Fasteners (Qty: 2)
	Left Instrument Panel Electrical Centre Assembly

4	**Procedure** Position the electrical centre assembly out of the way.

Communication Interface Module Bracket Service Positioning

Note: It is not necessary to disconnect the electrical wiring to the modules or remove the modules from the communications interface module bracket when following the service positioning procedure.

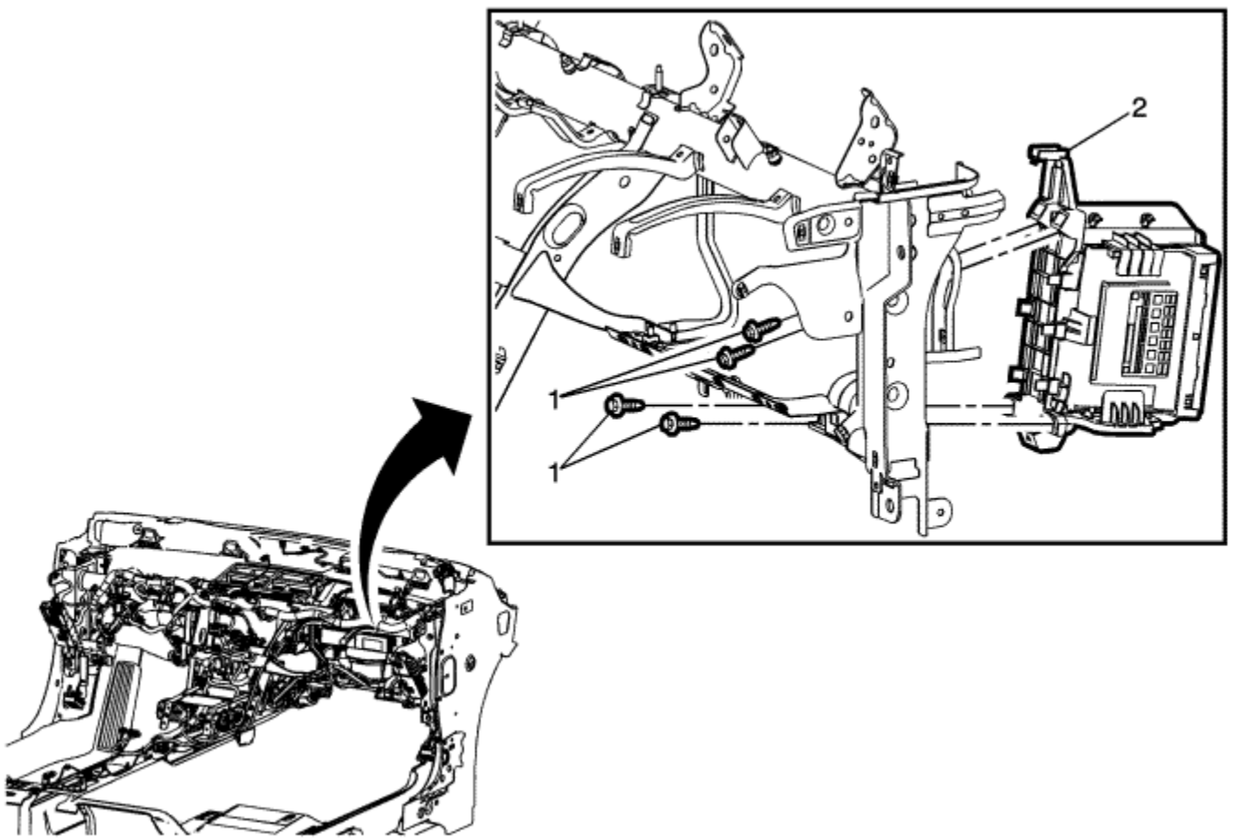

Communication Interface Module Bracket Service Positioning

Callout	Component Name
1	Communication Interface Module Bracket Fasteners (Qty: 4)

	Communication Interface Module Bracket Assembly
2	**Procedure** Position the communication interface module bracket assembly out of the way.

Instrument Panel Tie Bar

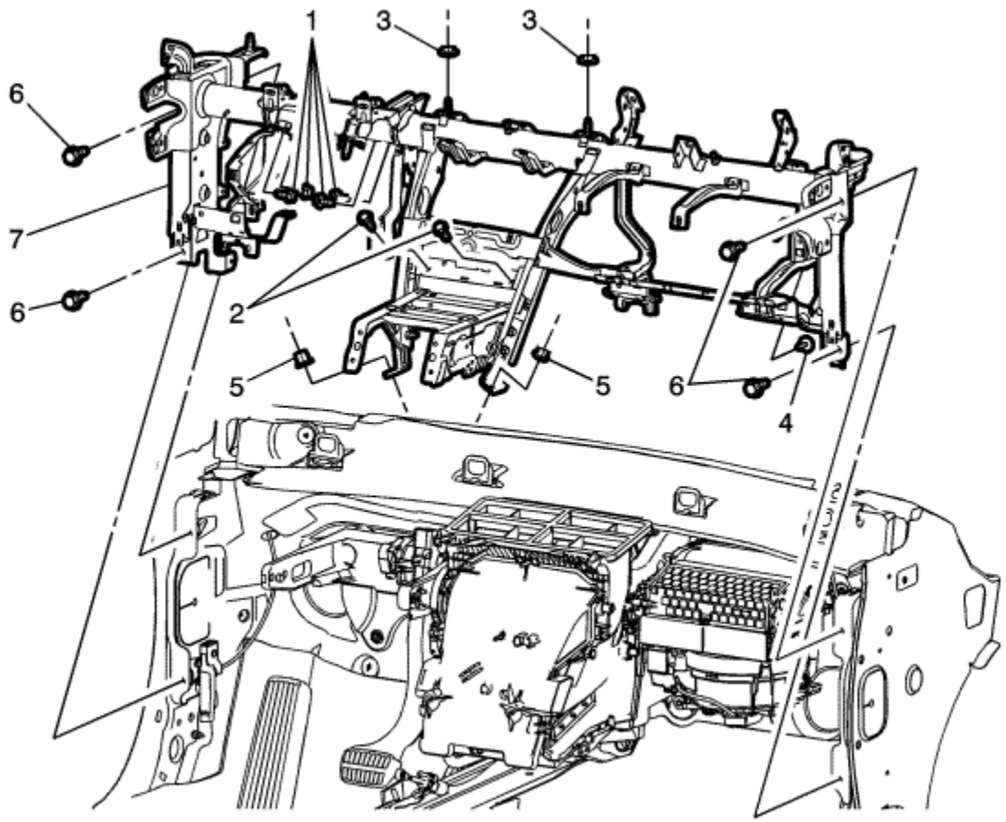

Instrument Panel Tie Bar

Callout	Component Name
	Instrument Panel Tie Bar to Brake Pedal Bracket Bolts (Qty: 4)

1	**Caution:** Refer to Fastener Caution in the Preface section. **Tighten** 12 N·m (9 lb ft)
2	Instrument Panel Tie Bar to HVAC Module Bolts (Qty: 2)
3	Instrument Panel Tie Bar to HVAC Module Nuts (Qty: 2)
4	Instrument Panel Tie Bar to HVAC Module Bolt **Tip** This bolt is driven from front of vehicle rearward.
5	Instrument Panel Tie Bar to Front Floor Tunnel Panel Nuts (Qty: 2) **Tighten** 22 N·m (17 lb ft)
6	Instrument Panel Tie Bar to Vehicle Body Bolts (Qty: 4) **Tighten** 22 N·m (17 lb ft)
7	Instrument Panel Tie Bar Assembly **Procedure** 1. Note location and routing of the instrument panel wiring harness assembly in order to ensure proper reinstallation. 2. Remove all fasteners securing the instrument panel wiring harness to the tie bar assembly. 3. With the aid of an assistant, remove the tie bar assembly from the vehicle. 4. When replacing the tie bar assembly, transfer all necessary components.

© Copyright Chevrolet. All rights reserved

Instrument Panel Wiring Harness Replacement

Removal Procedure

Note: Arrange a place to embed the removed parts.

1. Install the MDI, start the ignition and read the diagnostic trouble codes.
   1.1. Delete all diagnostic trouble codes and read diagnostic trouble codes again.
   1.2. Notice ALL diagnostic trouble codes.
2. Disconnect the battery negative cable. Refer to Battery Negative Cable Disconnection and Connection .
3. Remove the inner and outer instrument panel lower trim pad retainer. Refer to Lower Trim Pad Retainer Replacement : Outer → Inner .
4. Remove the communication interface module. Refer to Communication Interface Module Replacement .

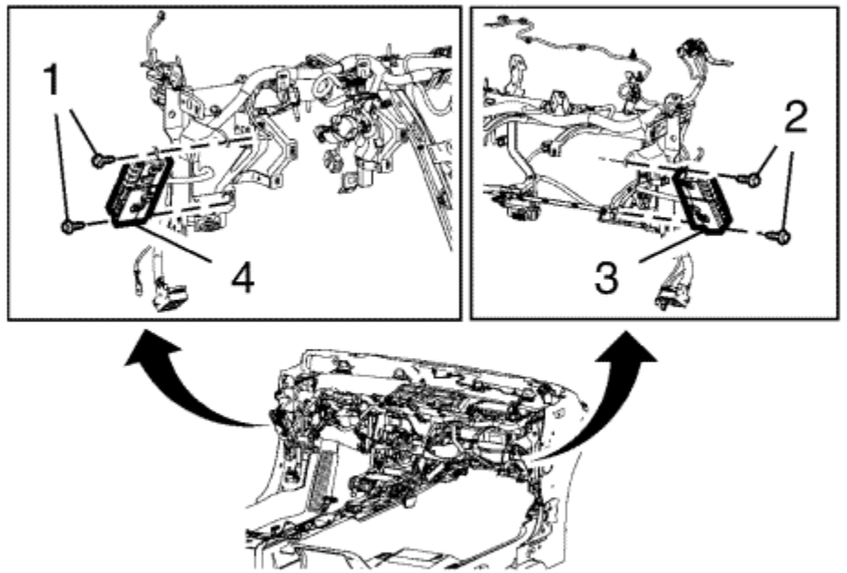

5. Remove the fasteners (1, 2), then remove the left and right instrument panel electrical centre assembly (3, 4).

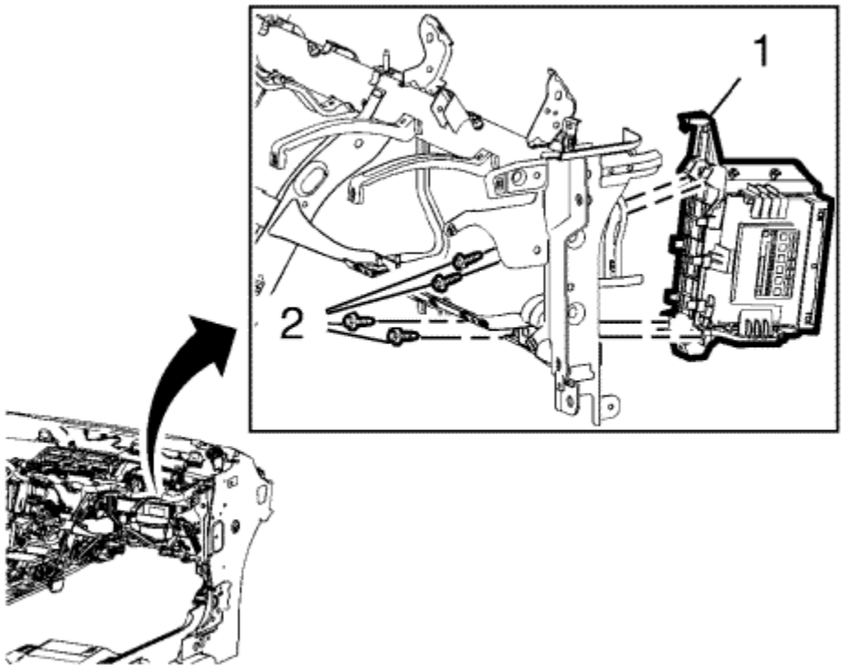

6. Remove the fasteners (2), than remove the communication interface module bracket (1).
7. Release all mass cables from the tie bar and body weld studs.
8. Release the instrument panel wiring harness. Take pictures from the routing and fixing points of the instrument panel wiring harness for the orientation.
9. Disconnect all electrical connectors and unscrew ground cables.
   9.1. Release all fixations.
   9.2. Take care about destroyed cable straps and harness guidance regarding noises and rattles.

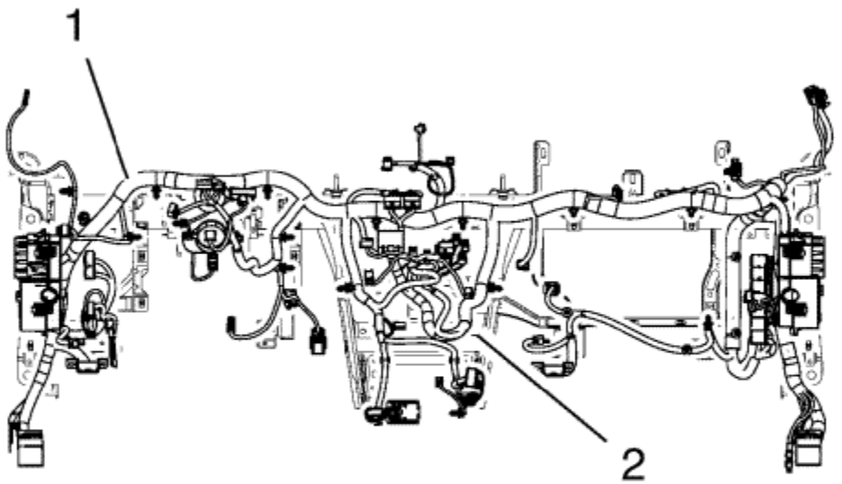

10. Remove the instrument panel wiring harness (1) from the instrument panel tie bar (2) and lay it on the floor. Unpack the new instrument panel wiring harness and compare the old with the new harness concerning quantity of fixing points, cable straps, guides, part numbers and pin assignments.

Installation Procedure

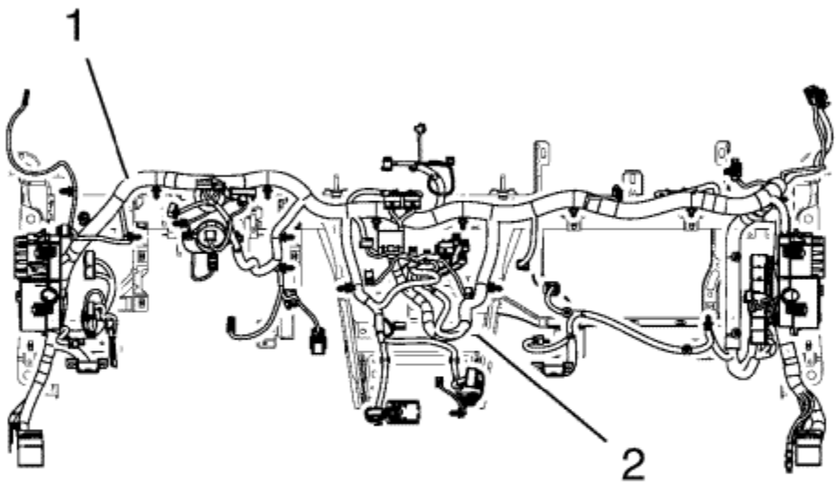

1. After comparing the new with the old harness (1) install the harness on the tie bar (2).
   - Check if there is no twisting and bending and fix the new wiring harness.
   - Use new cable straps and pins. Connect all electrical connectors.
   - Take care for the correct counterpart and the pin assignment.
   - Use the pictures for orientation.

   Caution: Refer to Fastener Caution in the Preface section.

2. Tighten all mass cables to the weld studs to**9 N·m (80 lb in)**.

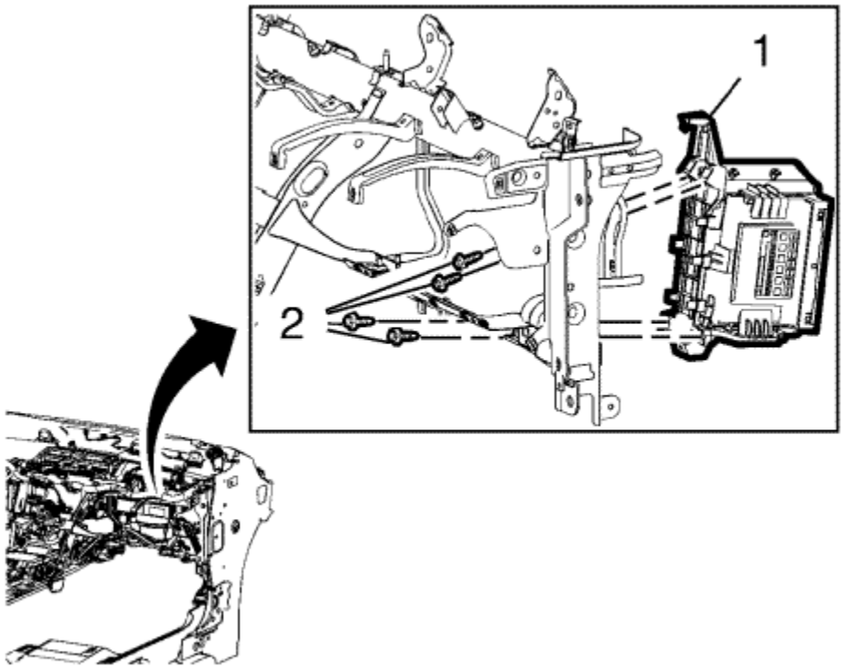

3. Install the communication interface module bracket (1) and tighten the fasteners (2) to **2.5 N·m (22 lb in)**.

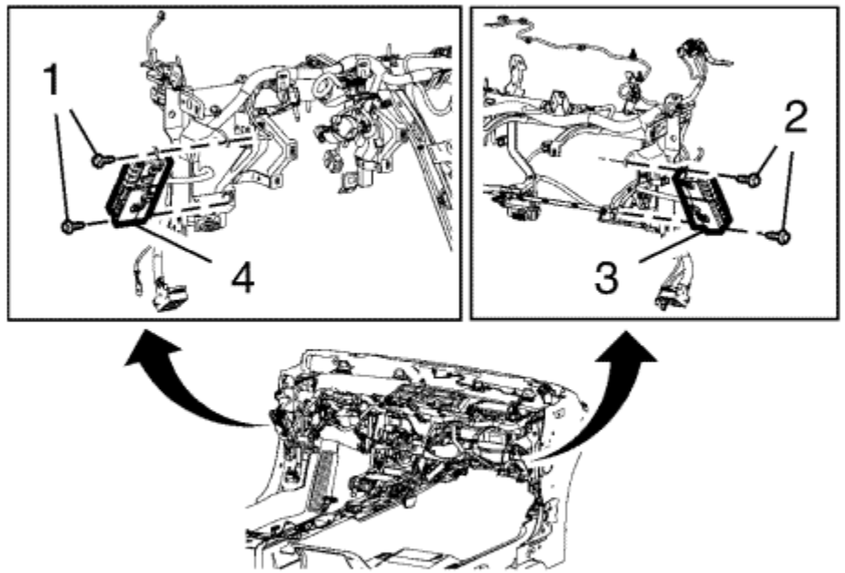

4. Install the left and right instrument panel electrical centre assembly (3, 4) and tighten the fasteners (1, 2) to **2.5 N·m (22 lb in)**.
5. Install the communication interface module. Refer to Communication Interface Module Replacement .
6. Install the inner and outer instrument panel lower trim pad retainer. Refer to Lower Trim Pad Retainer Replacement : Outer → Inner .
7. Connect the battery negative cable. Refer to Battery Negative Cable Disconnection and Connection .
8. Install the MDI, start the ignition and read the diagnostic trouble codes. Delete all diagnostic trouble codes and read trouble codes again.
9. Check all electrical functions and perform a test run.

&#169© Copyright Chevrolet. All rights reserved

Front Floor Console Compartment Door Hinge Replacement

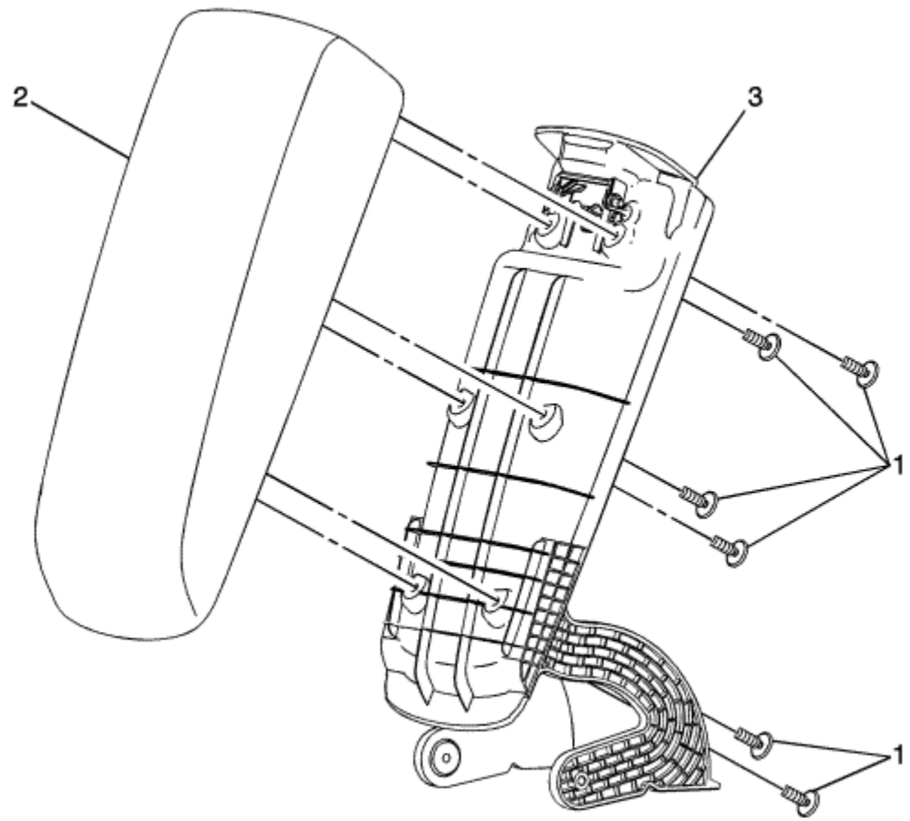

Callout	Component Name
Preliminary Procedure Remove the front floor console armrest assembly. Refer to Front Floor Console Armrest Replacement .	
1	Front Floor Console Armrest Hinge Cover Fasteners (Qty: 6)

	Caution: Refer to Fastener Caution in the Preface section.
2	Front Floor Console Armrest Hinge Cover Assembly
3	Front Floor Console Armrest Hinge Assembly **Procedure** Transfer all remaining necessary components.

© Copyright Chevrolet. All rights reserved

Front Floor Console Compartment Door Latch Replacement

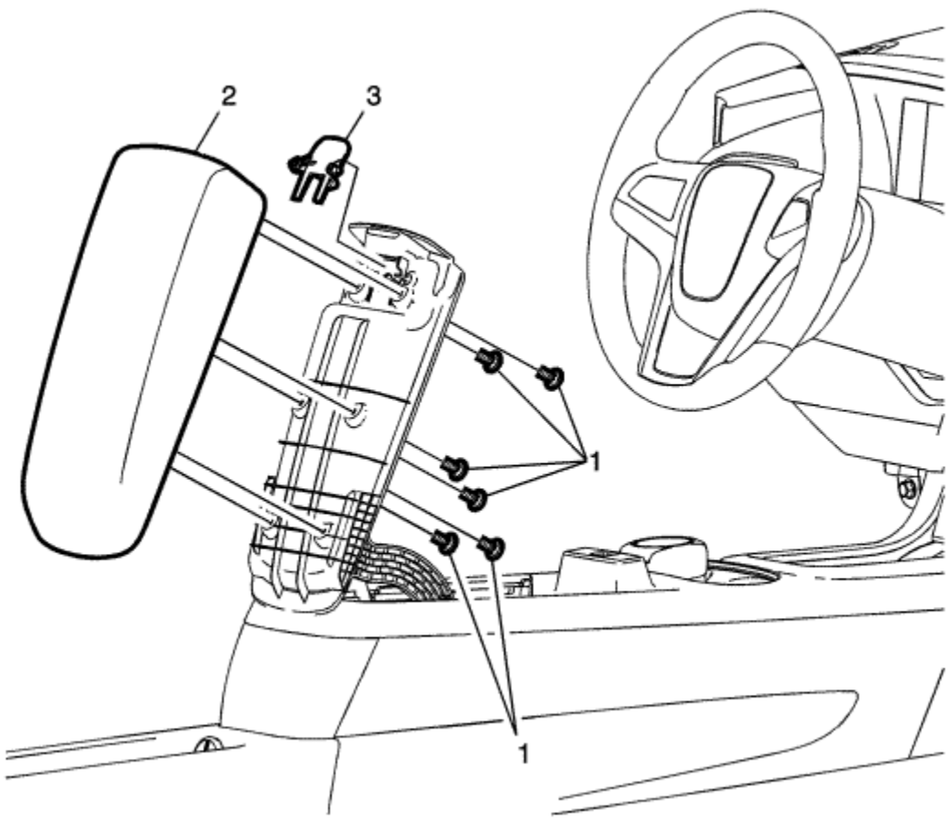

Callout	Component Name
1	Front Floor Console Armrest Hinge Cover Fasteners (Qty: 6) **Caution:** Refer to Fastener Caution in the Preface section.
2	Front Floor Console Armrest Hinge Cover Assembly
3	Front Floor Console Compartment Door Latch Assembly

© Copyright Chevrolet. All rights reserved

Front Floor Console Side Cover Replacement

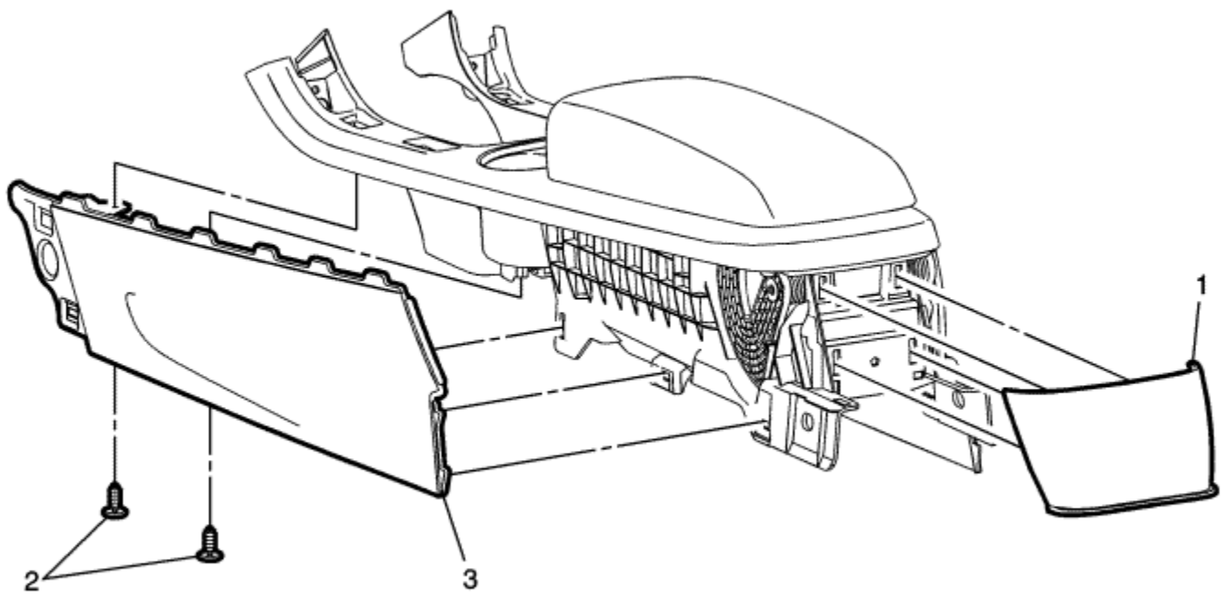

Callout	Component Name
Note:: Left Side Shown, Right Side Similar. **Preliminary Procedure** Remove the front floor console assembly. Refer to Front Floor Console Replacement .	

1	Front Floor Console Rear Cover Assembly **Procedure** Grasp the rear cover assembly and pull rearward releasing the clips securing the rear cover to the console assembly.
2	Front Floor Console Side Cover Fastener (Qty: 2) **Caution:** Refer to Fastener Caution in the Preface section. **Procedures** 1. Grasp the side cover and pull outward releasing the clips securing the side cover to the console assembly. 2. Disconnect the connectors securing the console wiring harness to the side cover, when applicable.
3	Front Floor Console Side Cover Assembly

© Copyright Chevrolet. All rights reserved

Front Floor Console Extension Replacement - Right Side

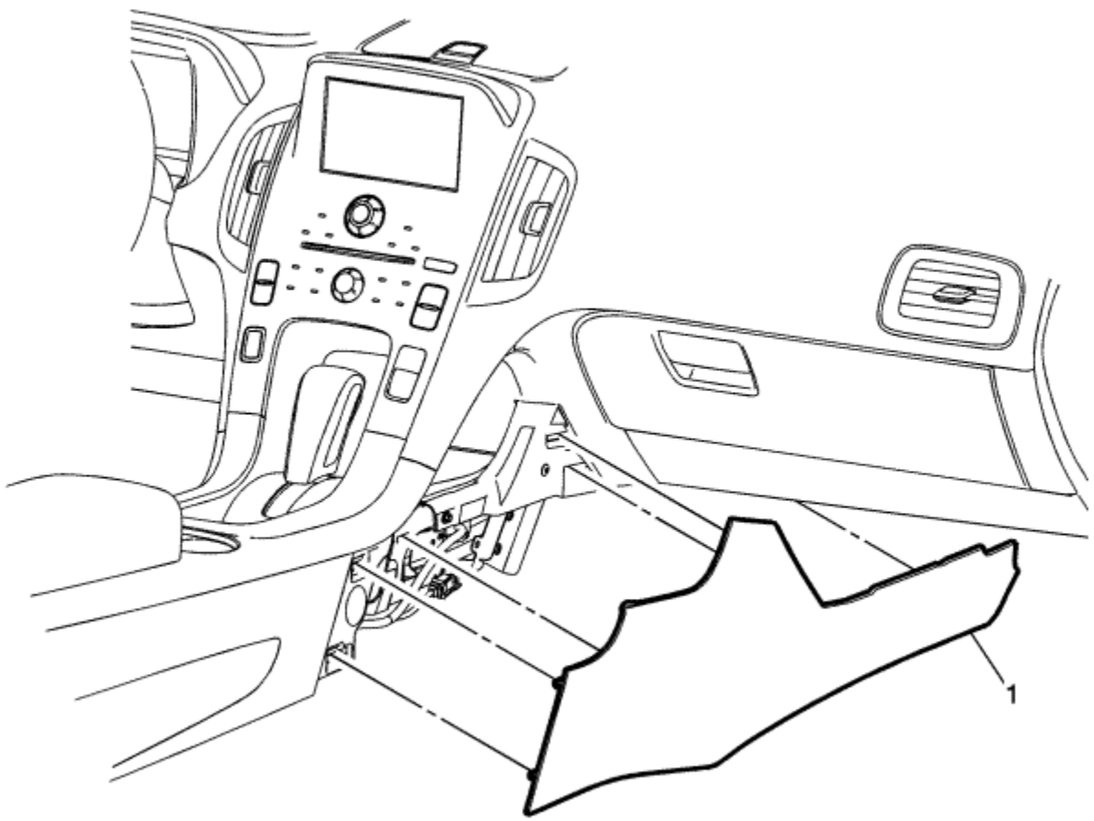

Callout	Component Name
Preliminary Procedure Move the right front seat to the full rearward position.	
	Front Floor Console Extension Assembly - Right

1	**Procedure** Use a flat bladed plastic trim tool to aid in the removal of the extension assembly.

© Copyright Chevrolet. All rights reserved

Front Floor Console Extension Replacement - Left Side

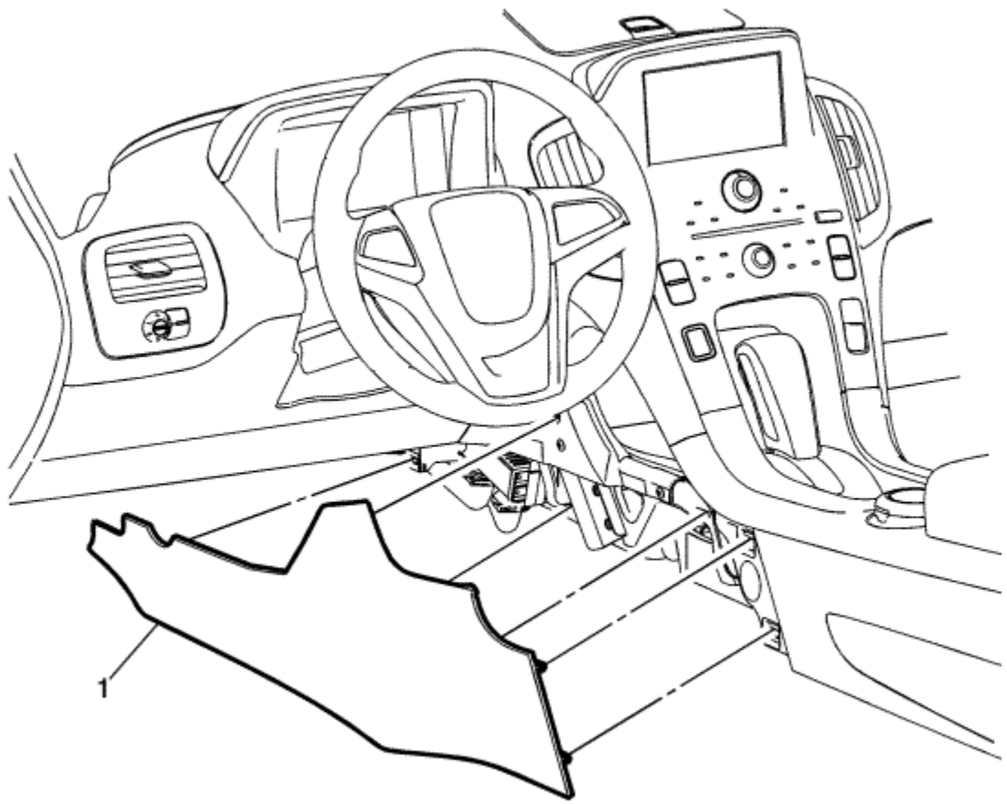

Callout	Component Name
Preliminary Procedure Move the left front seat to the full rearward position.	
	Front Floor Console Extension Assembly - Left

1	**Procedure** Use a flat bladed plastic trim tool to aid in the removal of the extension assembly.

© Copyright Chevrolet. All rights reserved

Front Floor Console Retainer Replacement

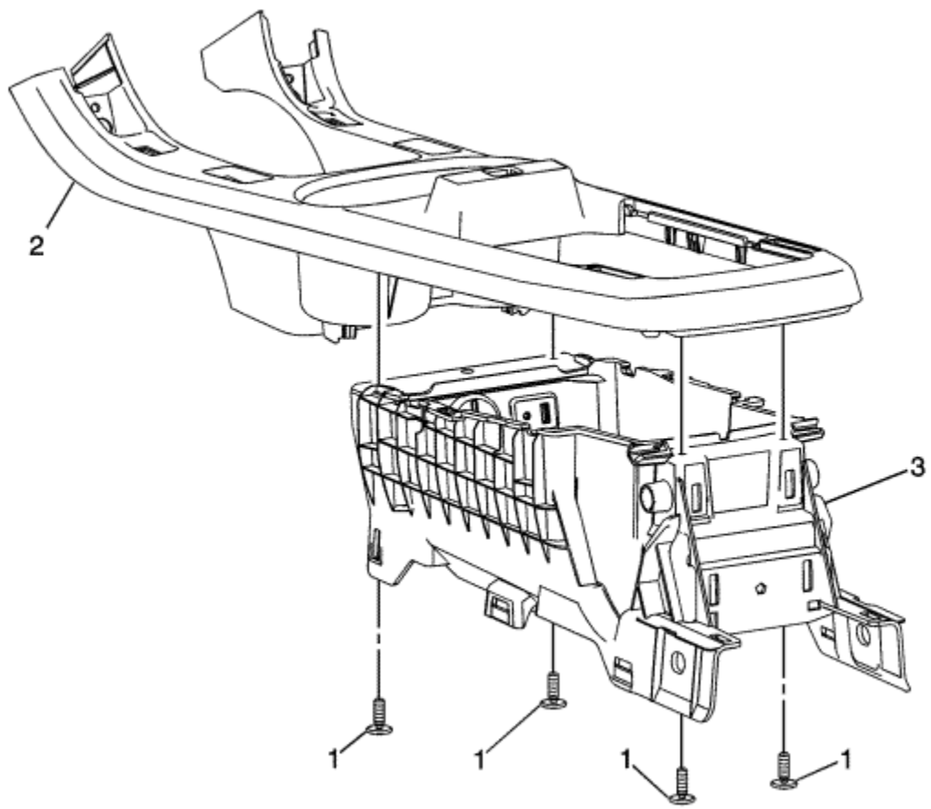

Callout	Component Name
Preliminary Procedure Remove the front floor console armrest assembly. Refer to Front Floor Console Armrest Replacement .	
1	Front Floor Console Trim Plate Fasteners (Qty: 4)

	Caution: Refer to Fastener Caution in the Preface section.
2	Front Floor Console Trim Plate Assembly
3	Front Floor Console Retainer Assembly

© Copyright Chevrolet. All rights reserved

Front Floor Console Replacement

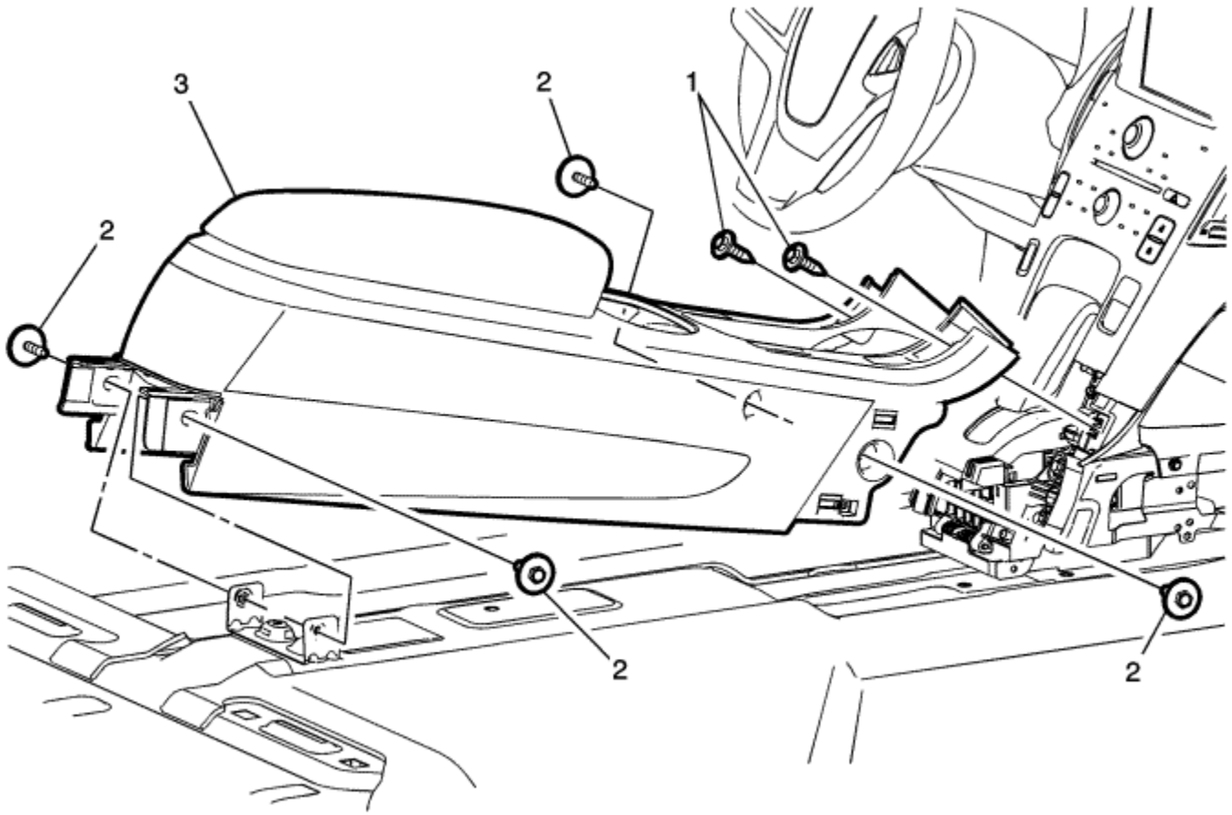

Callout	Component Name

Preliminary Procedures

1. Remove the front floor rear console assembly. Refer to Front Floor Rear Console Replacement .
2. Remove the front floor console applique. Refer to Front Floor Console Applique Replacement .
3. Remove the left and right front floor console extensions. Refer to Front Floor Console Extension Replacement - Left Side and Front Floor Console Extension

Replacement - Right Side .

1	Front Floor Console Screw (Qty: 2) **Caution:** Refer to Fastener Caution in the Preface section.
2	Front Floor Console Bolt (Qty: 4) **Tighten** 9 N·m (80 lb in)
3	Front Floor Console Assembly **Procedures** 1. Disconnect the electrical connections. 2. When replacing the front floor console assembly, transfer all necessary components.

© Copyright Chevrolet. All rights reserved

Front Floor Rear Console Replacement

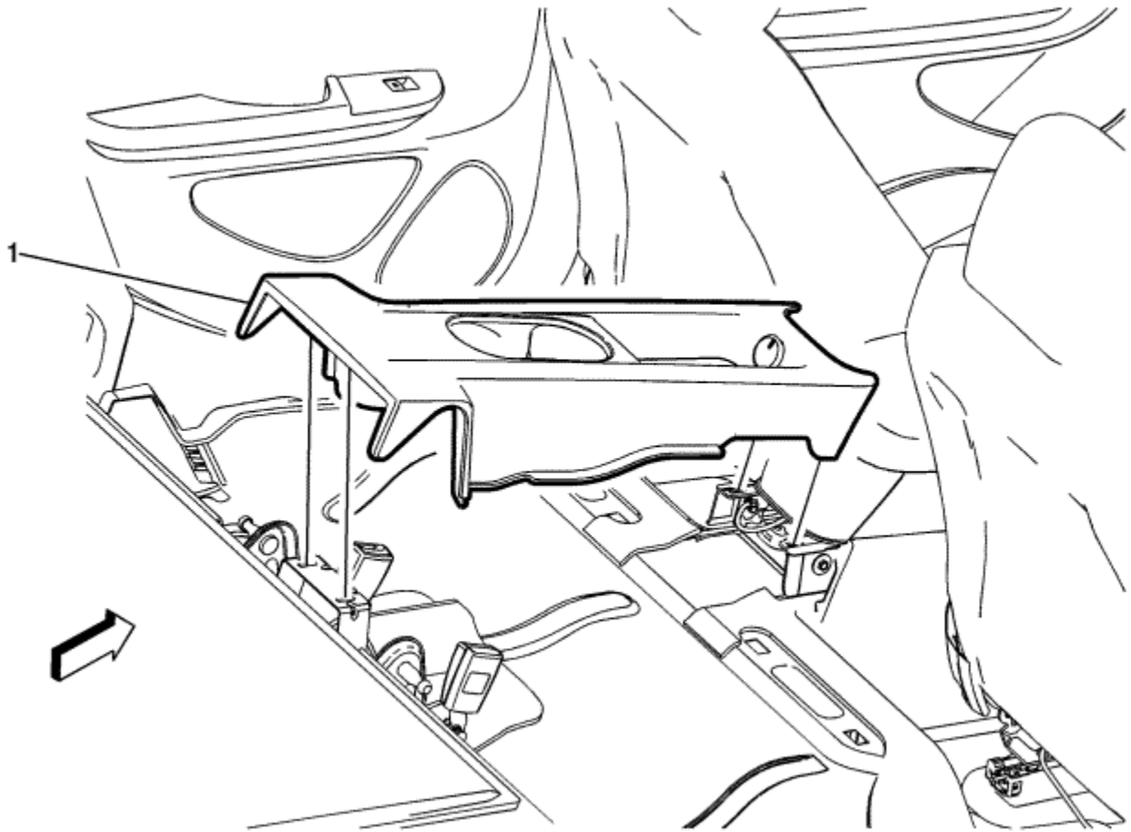

Callout	Component Name
Preliminary Procedure 1. Remove the rear seat cushions. Refer to Rear Seat Cushion Replacement . 2. Fold the rear seat backs down.	

1	Front Floor Rear Console Assembly. **Procedure** 1. Grasp the rear of the console assembly and pull upwards disengaging the clips securing the rear of the console to the vehicle. 2. Grasp the front of the console assembly and pull upwards disengaging the clips securing the front of the console to the vehicle. 3. Disconnect the electrical connections. 4. When replacing the front floor rear console assembly, transfer all necessary components.

© Copyright Chevrolet. All rights reserved

Front Floor Console Armrest Replacement

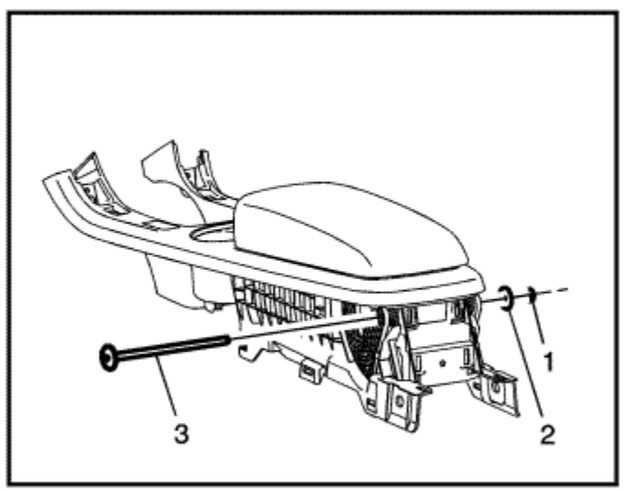

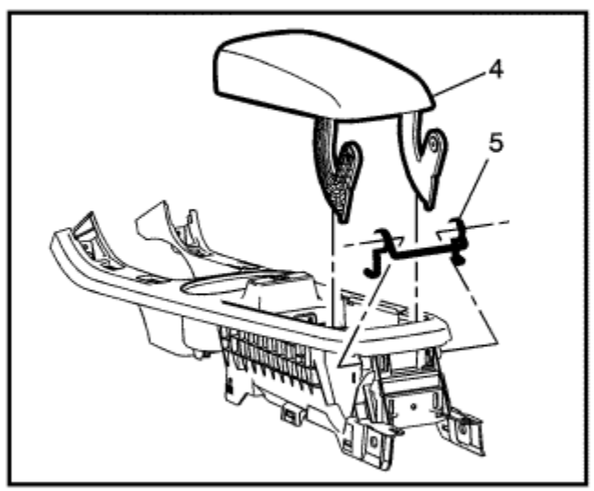

Callout	Component Name
Preliminary Procedures 1. Remove the front floor console from the vehicle. Refer to Front Floor Console Replacement . 2. Remove the right and left front floor console side covers. Refer to Front Floor Console Side Cover Replacement .	

1	Front Floor Console Armrest Hinge Pin Retainer
2	Front Floor Console Armrest Hinge Pin Washer
3	Front Floor Console Armrest Hinge Pin
4	Front Floor Console Armrest Assembly
5	Front Floor Console Compartment Door Spring

© Copyright Chevrolet. All rights reserved

Front Floor Console Armrest Hinge Cover Replacement

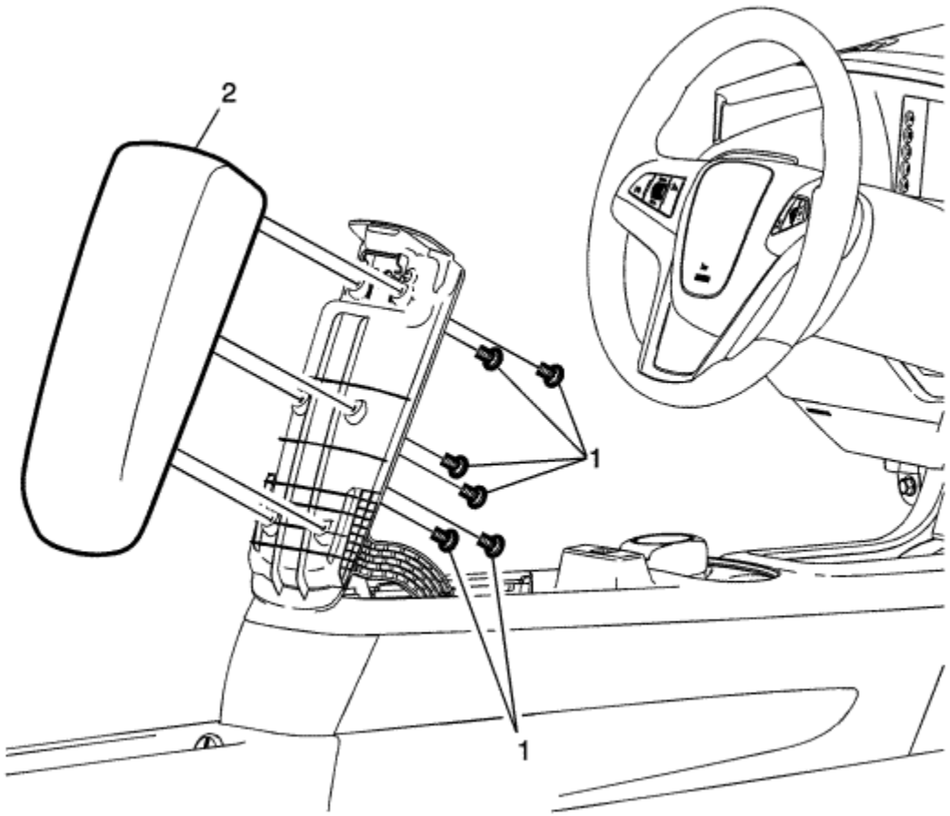

Callout	Component Name
1	Front Floor Console Armrest Hinge Cover Fasteners (Qty: 6) **Caution:** Refer to Fastener Caution in the Preface section.
2	Front Floor Console Armrest Hinge Cover Assembly

© Copyright Chevrolet. All rights reserved

Front Floor Console Trim Plate Replacement

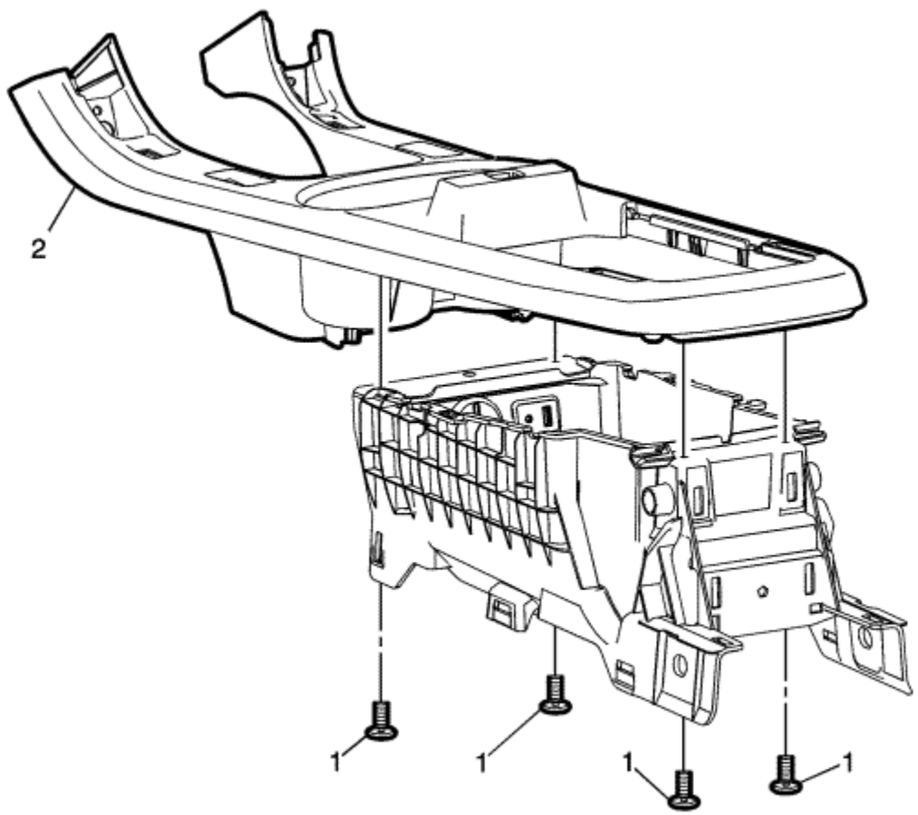

Callout	Component Name
Preliminary Procedure Remove the front floor console armrest assembly. Refer to Front Floor Console Armrest Replacement .	
1	Front Floor Console Trim Plate Fasteners (Qty: 4)

	Caution: Refer to Fastener Caution in the Preface section.
2	Front Floor Console Trim Plate Assembly **Procedure** Transfer any necessary components.

© Copyright Chevrolet. All rights reserved

Front Floor Console Applique Replacement

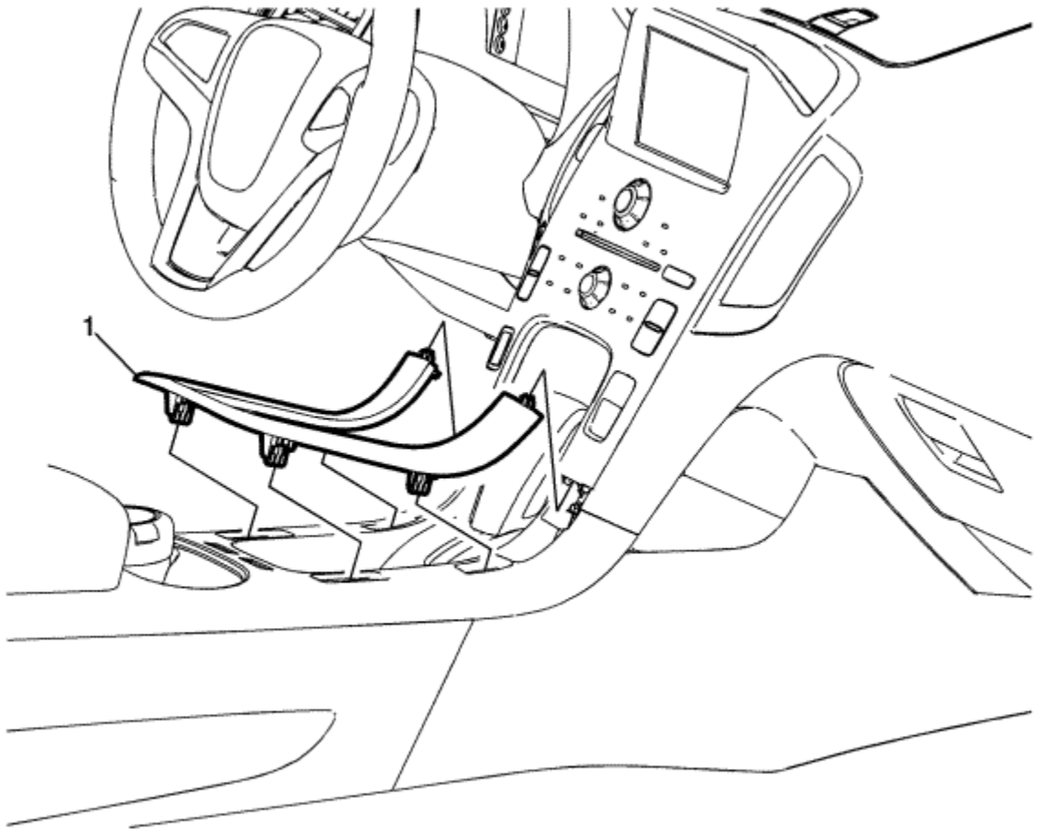

Callout	Component Name
1	Front Floor Console Applique **Procedure** Starting at the rearward edge of the applique, use a flat bladed plastic trim tool and release the retainer clips securing the applique to the console assembly.

© Copyright Chevrolet. All rights reserved

Front Floor Console Rear Cover Replacement

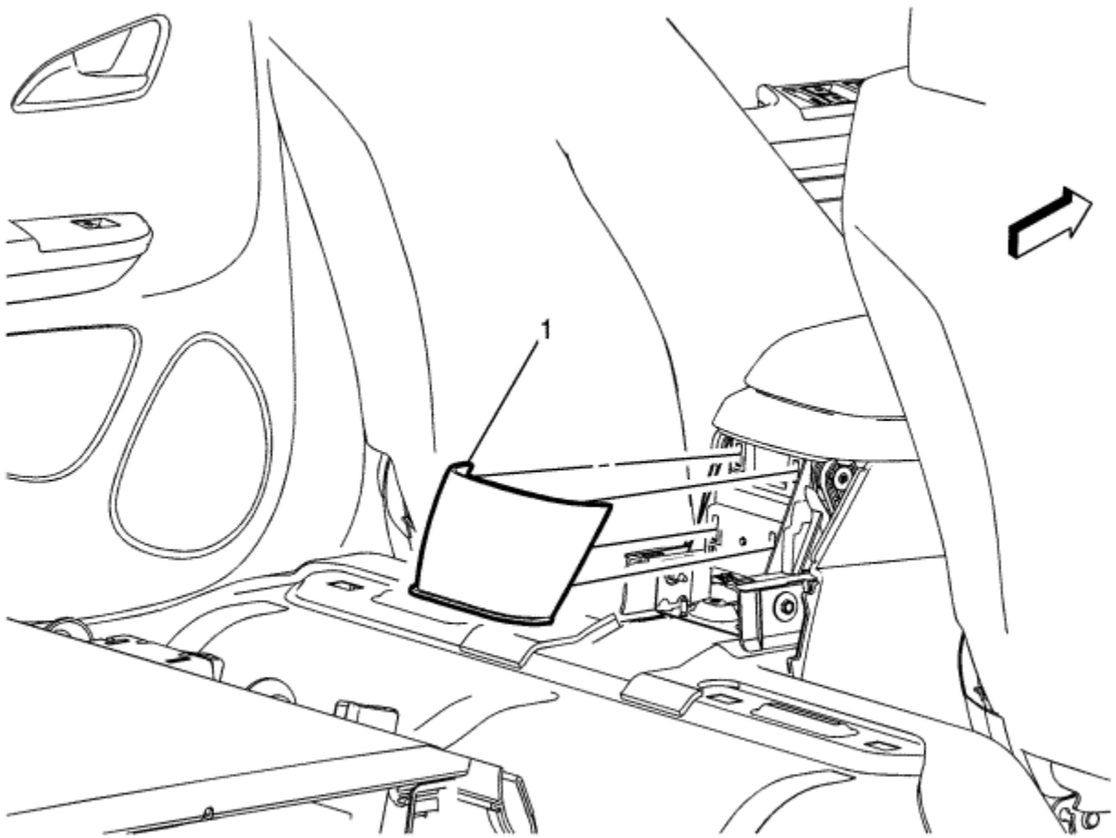

Callout	Component Name
Preliminary Procedure Remove the front floor rear console assembly. Refer to Front Floor Rear Console Replacement .	
	Front Floor Console Rear Cover Assembly

1	**Procedure** Grasp the rear cover assembly and pull rearward releasing the clips securing the rear cover to the console assembly.

© Copyright Chevrolet. All rights reserved

Roof Console Replacement

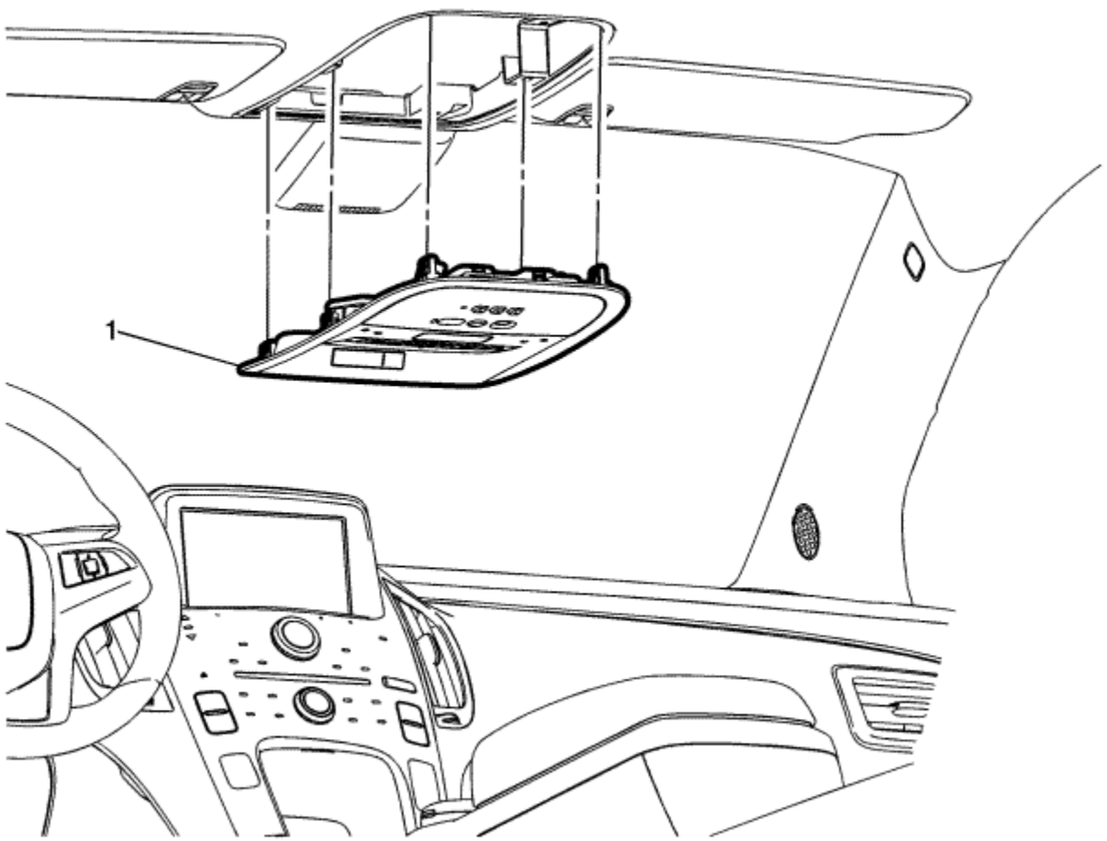

Callout	Component Name
1	Roof Console Assembly **Procedures** 1. Grasp the overhead console assembly on both sides and pull downward disengaging the clips securing the console to the headliner.

	2. Disconnect the electrical connections. 3. When replacing the roof console assembly, transfer all necessary components.

© Copyright Chevrolet. All rights reserved

Fastener Tightening Specifications

Application	Specification	
	Metric	English
Load Floor Front Trim Panel Fastener	6 N·m	53 lb in
Roof Rail Rear Assist Handle Fastener	6 N·m	53 lb in

© Copyright Chevrolet. All rights reserved

Front Side Door Accessory Switch Mount Plate Replacement - Drivers Side Door

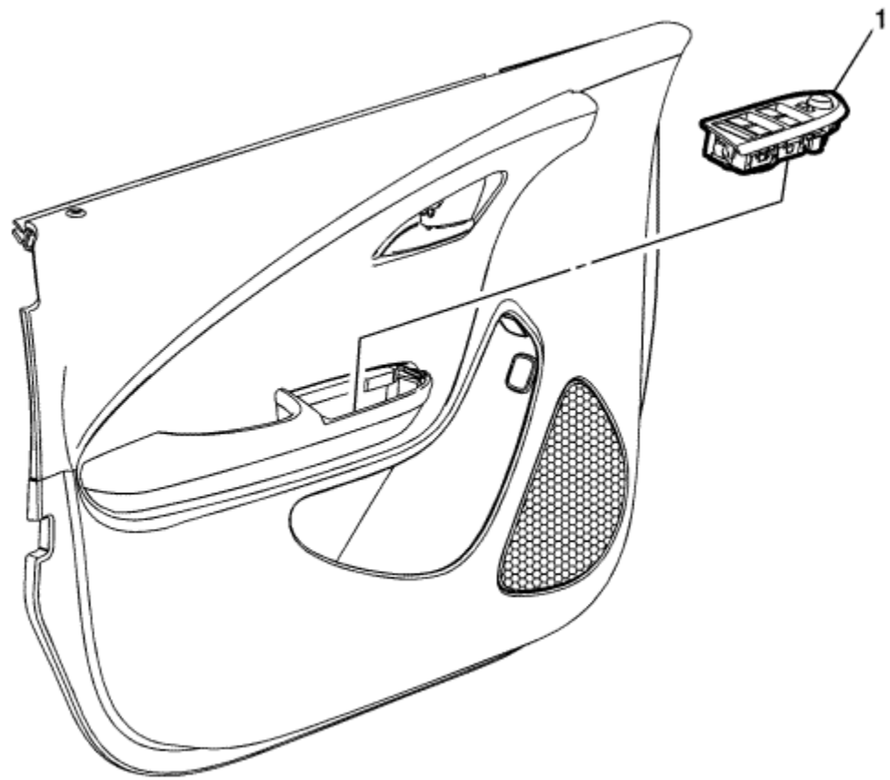

Callout	Component Name
1	Front Side Door Accessory Switch Mount Plate **Procedure** 1. Use the appropriate plastic trim tool to release the front side door accessory switch mount plate spring clips from the door trim panel.

	2. Disconnect the electrical connector from the switch assembly. 3. Transfer parts as necessary.

© Copyright Chevrolet. All rights reserved

Front Side Door Accessory Switch Mount Plate Replacement - Passenger Side Door

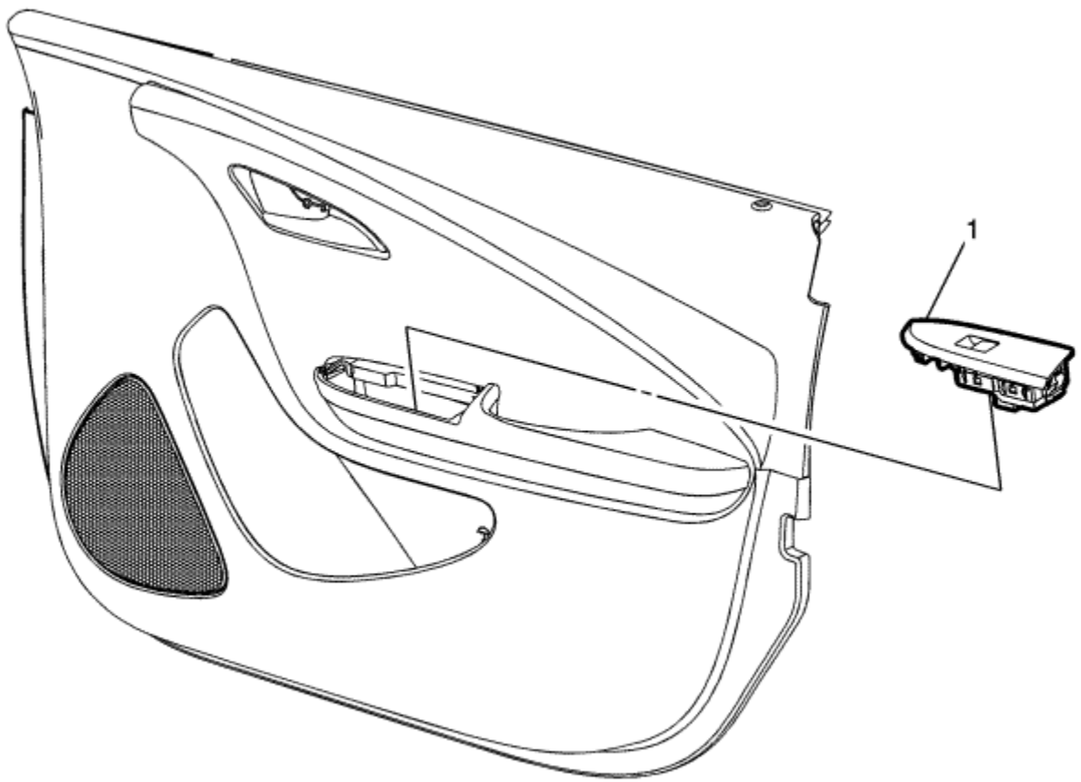

Callout	Component Name
1	Front Side Door Accessory Switch Mount Plate **Procedure** 1. Use the appropriate plastic trim tool to release the front side door accessory switch mount plate spring clips from the door trim panel.

	2. Disconnect the electrical connector from the switch assembly. 3. Transfer parts as necessary.

© Copyright Chevrolet. All rights reserved

Rear Side Door Accessory Switch Mount Plate Replacement

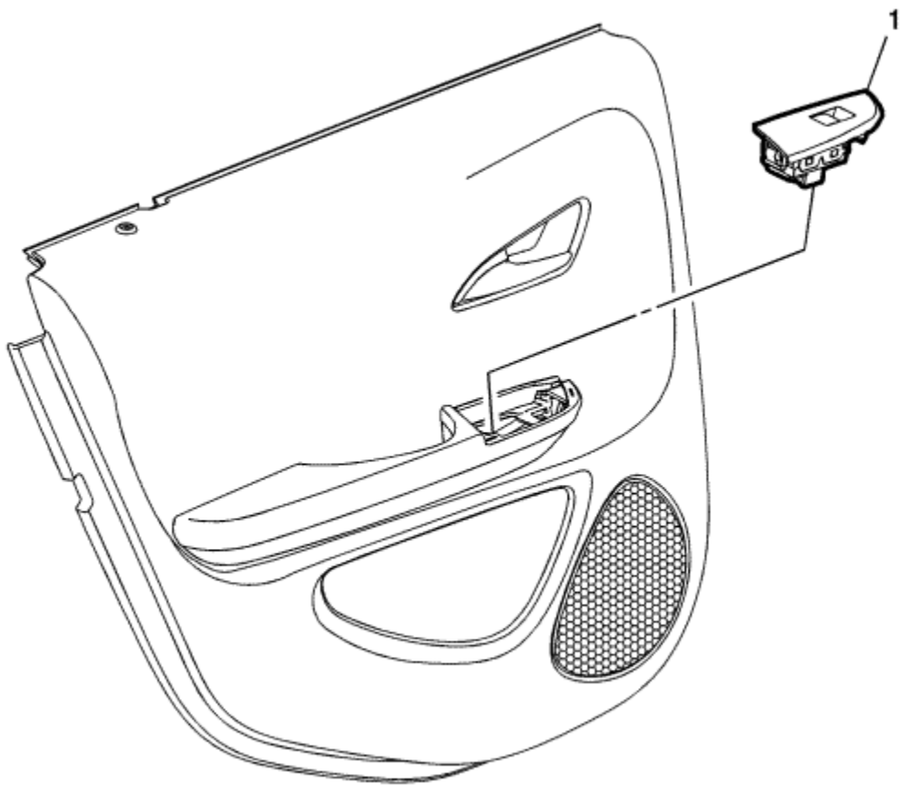

Callout	Component Name
1	Rear Side Door Accessory Switch Mount Plate **Procedure** 1. Use the appropriate plastic trim tool to release the rear side door accessory switch mount plate spring clips from the door trim panel.

	2. Disconnect the electrical connector from the switch assembly. 3. Transfer parts as necessary.

© Copyright Chevrolet. All rights reserved

Front Side Door Trim Replacement

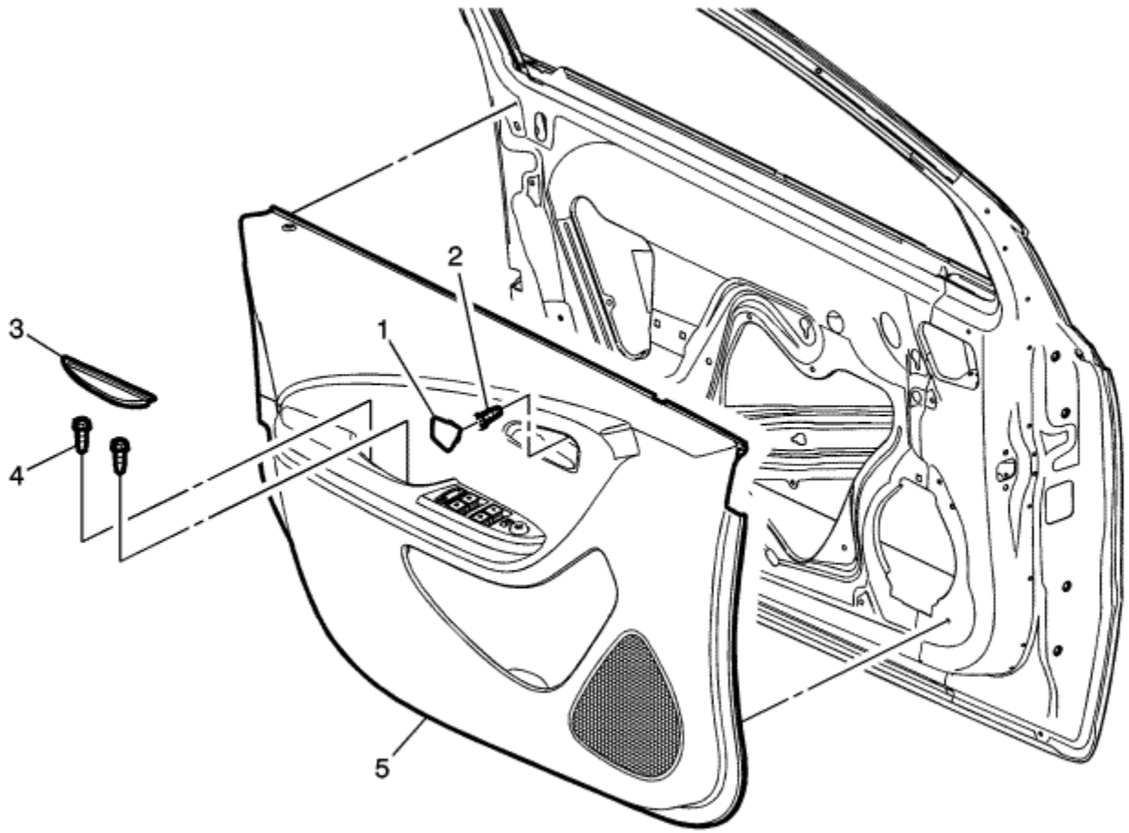

Callout	Component Name
1	Front Side Door Inside Handle Bolt Finish Cap
2	Front Side Door Inside Handle Fastener **Caution:** Refer to Fastener Caution in the Preface section.
3	Front Side Door Armrest Opening Cover Assembly

4	Front Side Door Armrest Pull Cup Fastener (Qty: 2)
5	Front Side Door Trim Assembly **Procedure** 1. Use the appropriate plastic trim tool to aid in the removal of the door trim. 2. Pull upwards on the door lock retainer cable to disengage. 3. Disconnect electrical connectors. **Tip** When the door trim is removed, all retainers should be replaced. Failure to replace the retainers may cause loss of retainer retention.

© Copyright Chevrolet. All rights reserved

Rear Side Door Window Garnish Moulding Replacement

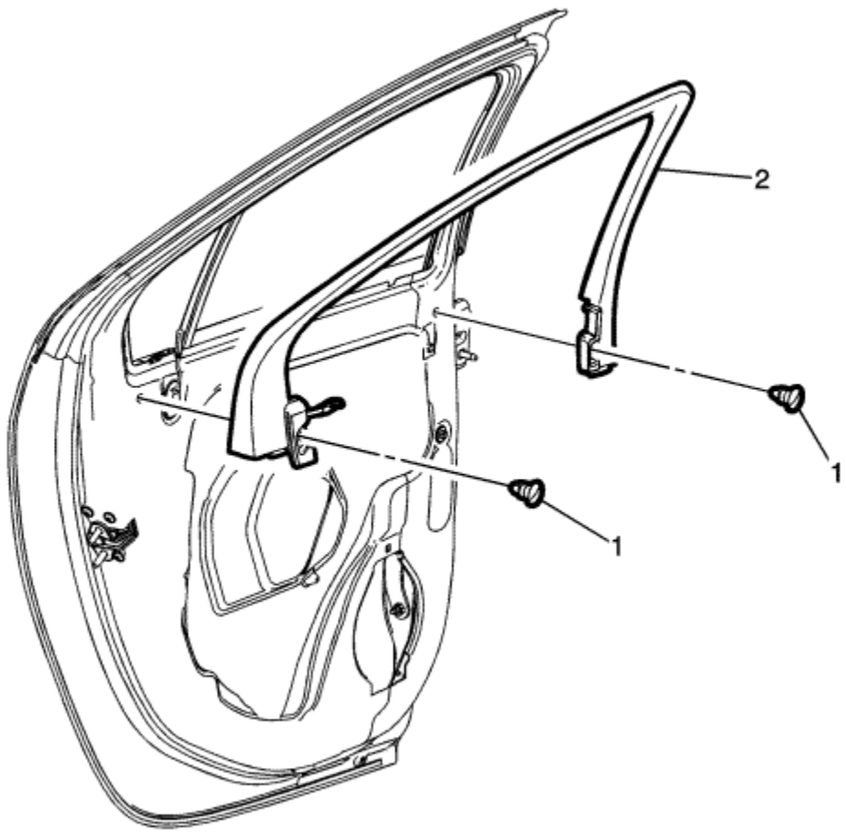

Callout	Component Name
Preliminary Procedure Remove the rear side door trim. Refer to Rear Side Door Trim Replacement .	
	Rear Side Door Window Garnish Moulding Retainer (Qty: 2)

1	**Procedure** Use a door trim panel removal tool or equivalent to aid in the removal of the retainers.
2	Rear Side Door Window Garnish Moulding Assembly **Procedure** Pull outward starting at the front and moving slowly rearward to remove the moulding.

© Copyright Chevrolet. All rights reserved

Front Side Door Window Garnish Moulding Replacement

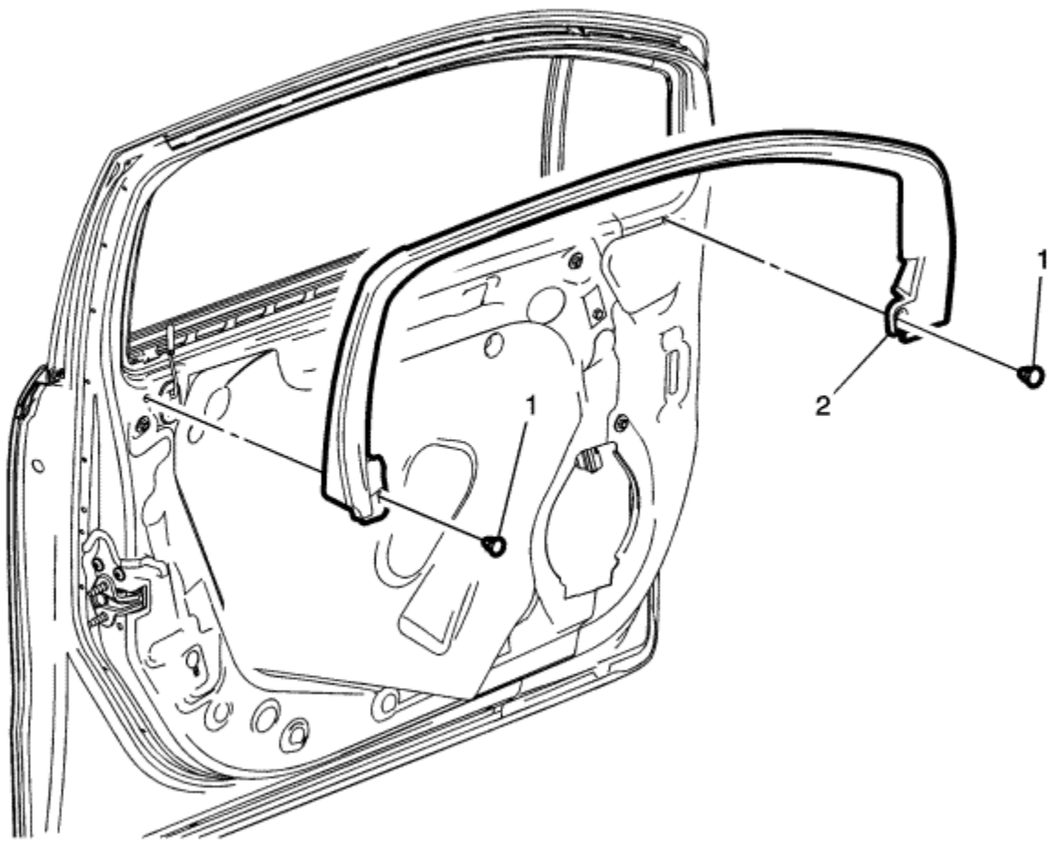

Callout	Component Name
Preliminary Procedure Remove the front side door trim. Refer to Front Side Door Trim Replacement .	
	Front Side Door Window Garnish Moulding Retainer (Qty: 2)

1	**Procedure** Use a door trim panel removal tool or equivalent to aid in the removal of the retainers.
2	Front Side Door Window Garnish Moulding Assembly **Procedure** Pull outward starting at the front and moving slowly rearward to remove the moulding.

© Copyright Chevrolet. All rights reserved

Roof Rail Rear Assist Handle Replacement

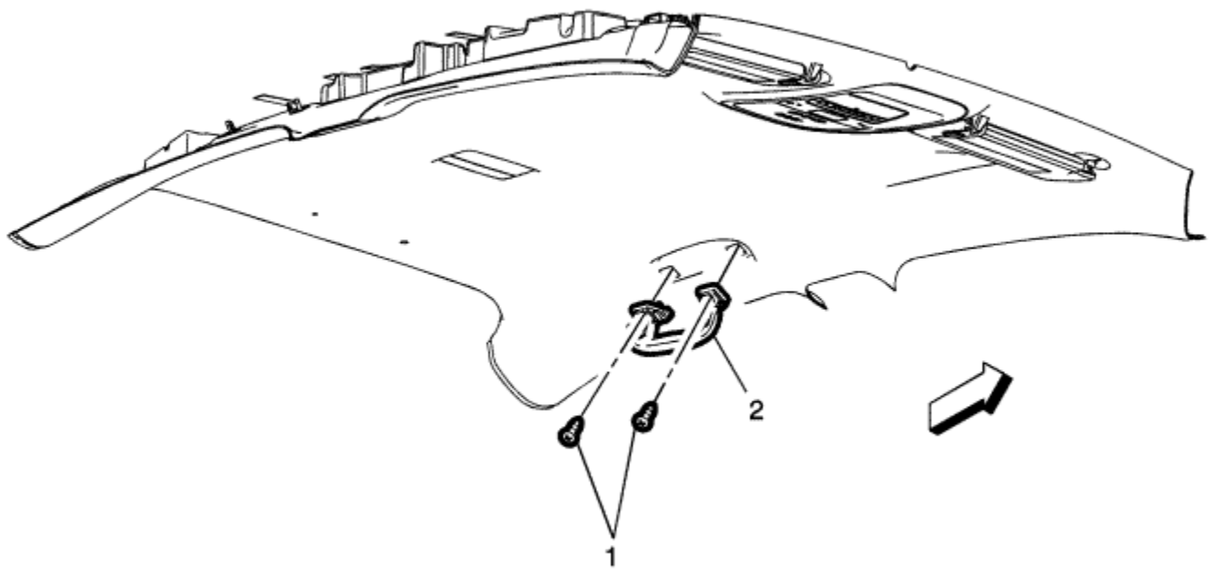

Callout	Component Name
	Roof Rail Rear Assist Handle Fastener (Qty: 2) **Caution:** Refer to Fastener Caution in the Preface section. **Procedure**

1	1. Fold the assist handle downward and hold. 2. Use a small flat-bladed tool to open the assist handle covers to access the screws. **Tighten** 6 N·m (53 lb in)
2	Roof Rail Rear Assist Handle Assembly

© Copyright Chevrolet. All rights reserved

Inside Rearview Mirror Mount Plate Cover Replacement

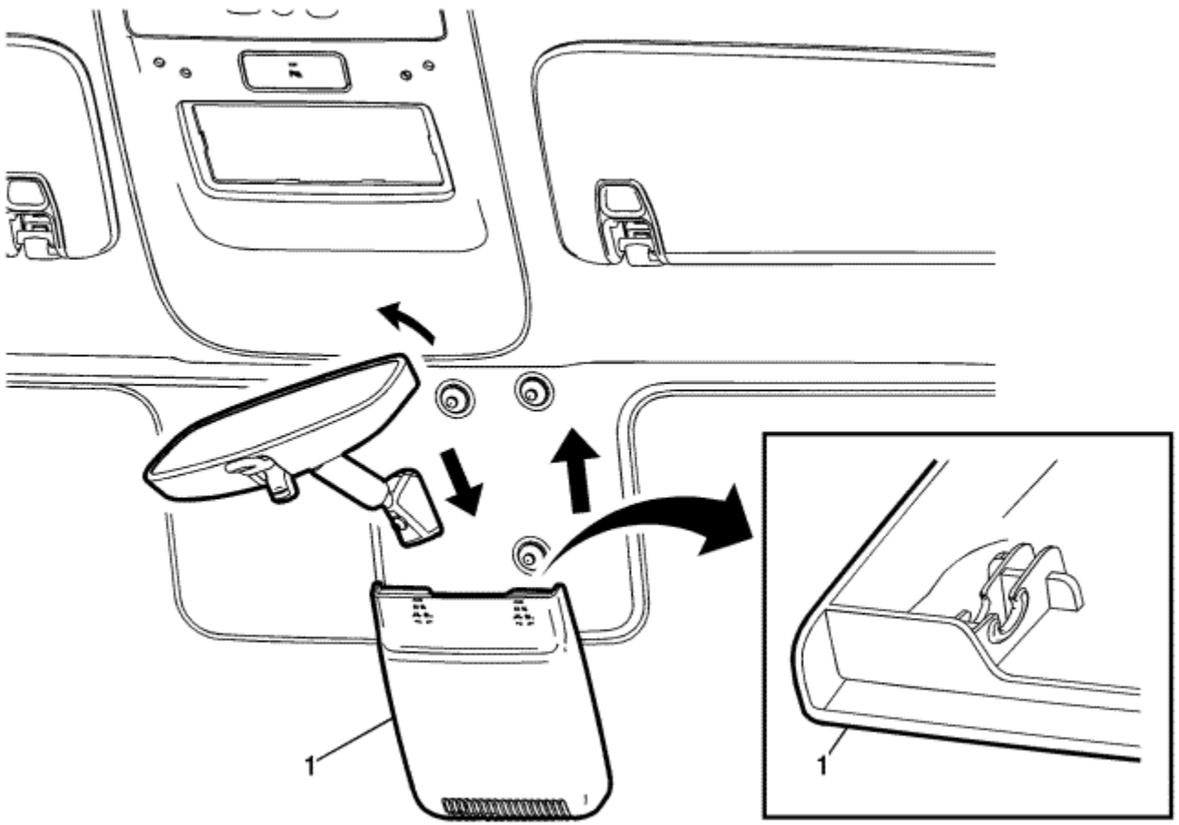

Callout	Component Name
1	Inside Rearview Mirror Mount Plate Cover Replacement **Procedure** 1. From inside the vehicle, position the inside rearview up and away from the inside rearview mirror mount plate cover.

2. Grasp the top centre of the mounting plate cover push upward and pull rearward at the same time this will release the cover from the top retainers.
3. Pushing down until the cover fully releases from the mounting plate lower retainers.

Tip
The lower retainer must be engaged first before the two upper bars are attached.

© Copyright Chevrolet. All rights reserved

Sunshade Replacement

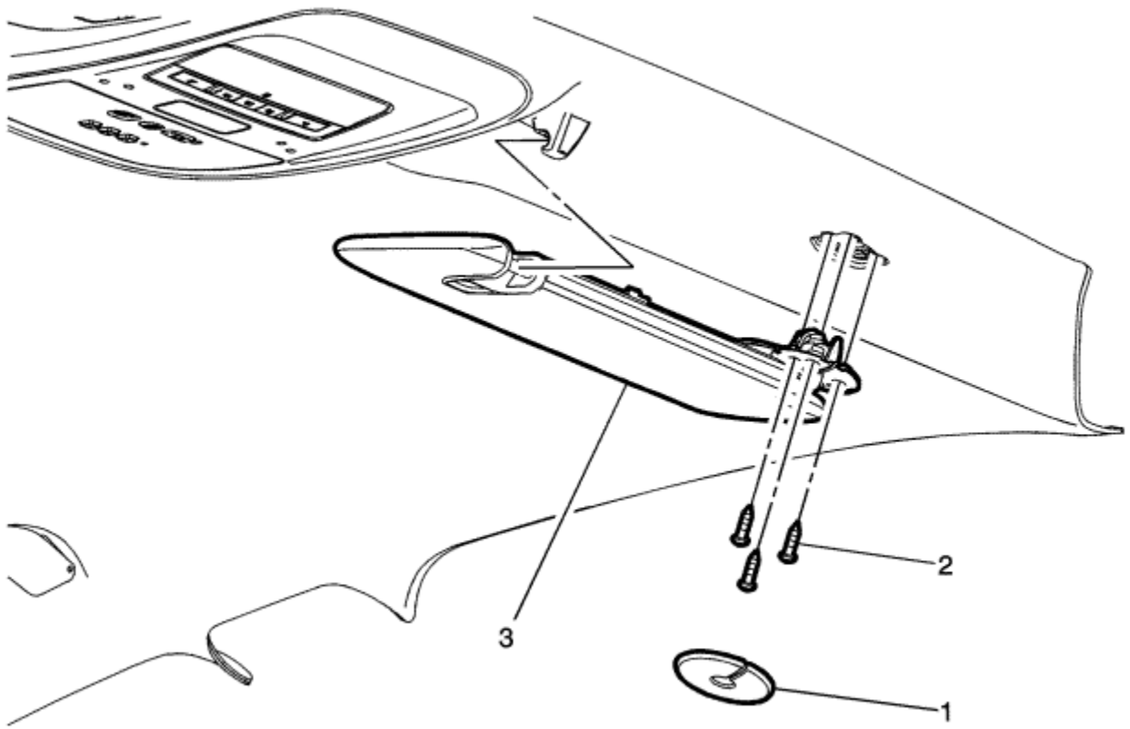

Callout	Component Name
Preliminary Procedure Lower the front of the headliner to access the sunshade electrical connector, if necessary. Refer to Headlining Trim Panel Replacement .	
1	Visor Retainer Bolt Cover
	Sunshade Fastener (Qty: 3)

2	**Caution:** Refer to Fastener Caution in the Preface section.
3	Sunshade Assembly **Procedure** 1. Squeeze the tabs at the base of the sunshade assembly to remove from the headliner. 2. Disconnect the electrical connector.

© Copyright Chevrolet. All rights reserved

Sunshade Support Replacement

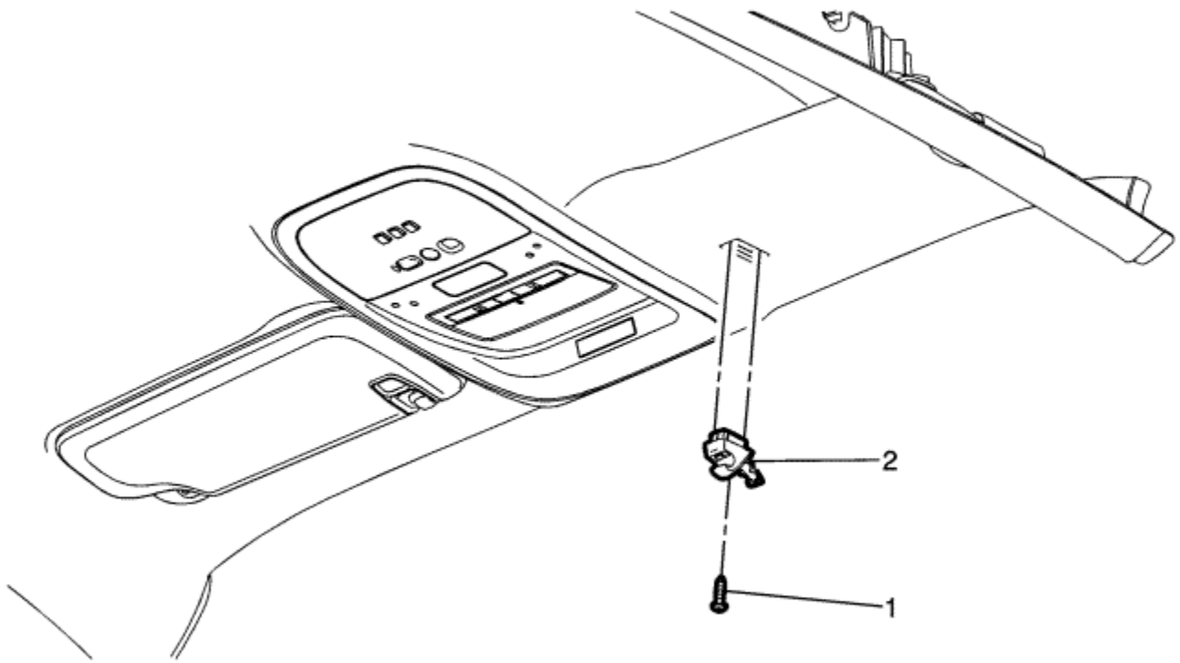

Callout	Component Name
1	Sunshade Support Fastener **Caution:** Refer to Fastener Caution in the Preface section. **Tip** Pull the cover downward to access the fastener.

2	Sunshade Support Assembly **Procedure** Unclip the sunshade from the support and reposition.

© Copyright Chevrolet. All rights reserved

Windscreen Side Garnish Molding Replacement

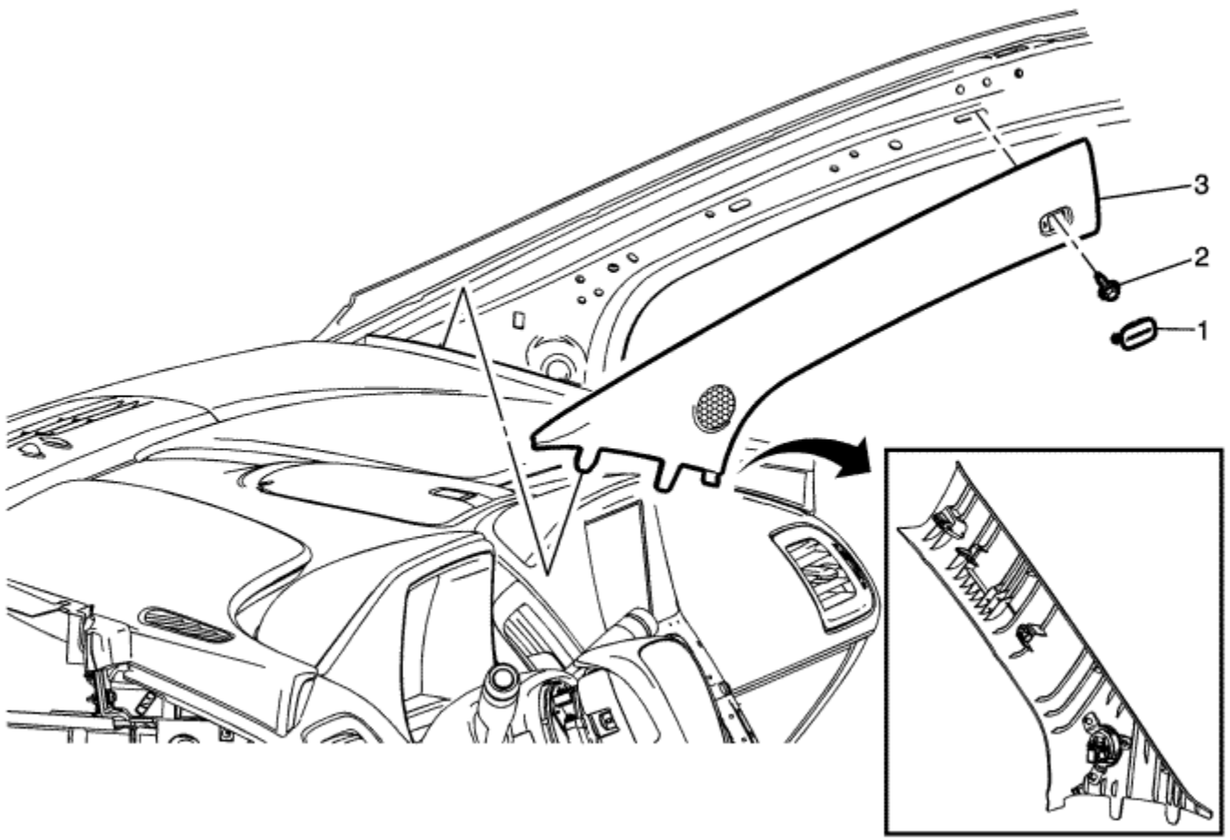

Callout	Component Name
Preliminary Procedures Disable the roof rail SIR system. Refer to SIR Disabling and Enabling .	
1	Inflatable Restraint Airbag Plate
	Windscreen Side Garnish Moulding Retainer Fastener

2	**Caution:** Refer to Fastener Caution in the Preface section.
3	Windscreen Side Garnish Moulding Assembly **Procedure** 1. Tabs must be installed prior to retainers. 2. Tabs to be fully seated in I/P upper trim pad retainer assembly. 3. Disconnect electrical connectors.

© Copyright Chevrolet. All rights reserved

Centre Pillar Trim Panel Replacement

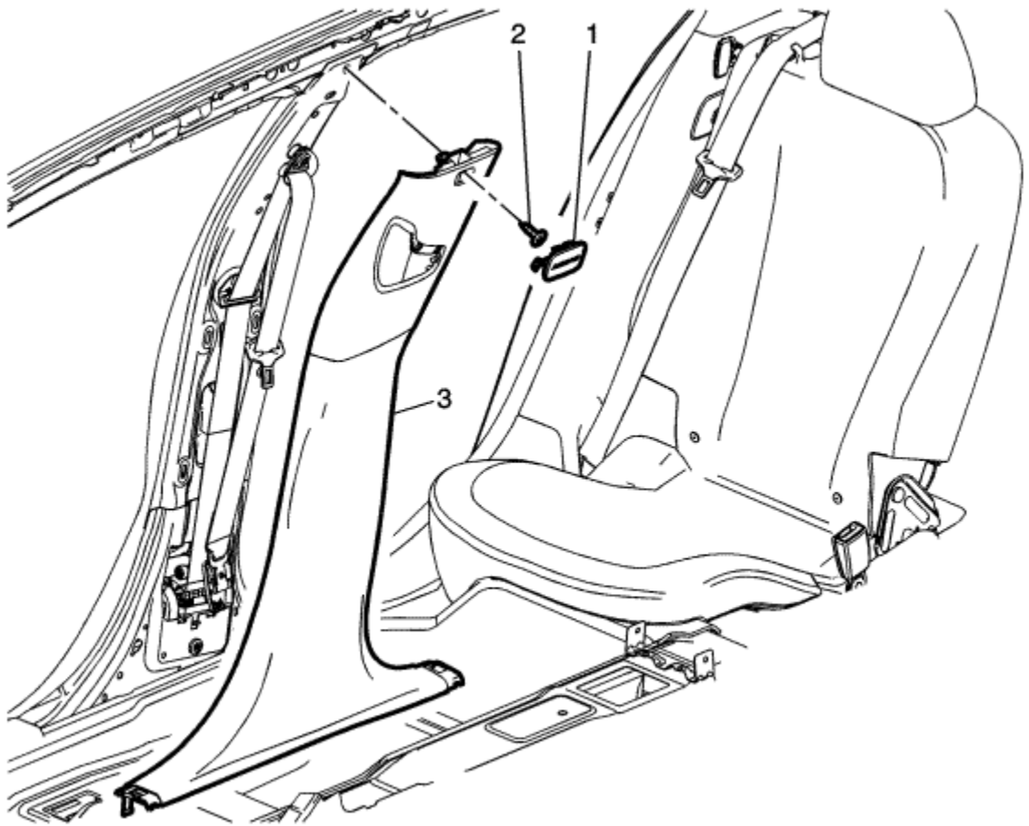

Callout	Component Name
Preliminary Procedures	

1. Disable the roof rail SIR system. Refer to SIR Disabling and Enabling .
2. Pull up on forward edge of rear side door opening floor carpet retainer to disengage tab. Refer to Rear Side Door Opening Floor Carpet Retainer Replacement .
3. Pull up on rearward edge of front side door opening floor carpet retainer to disengage tab. Refer to Front Side Door Opening Floor Carpet Retainer Replacement .

4. Remove the seat belt tensioner fastener and feed seat belt through centre pillar trim panel. Refer to Driver or Passenger Seat Retractor Side Belt Replacement .

1	Inflatable Restraint Airbag Name Plate
2	Centre Pillar Upper Trim Panel Fastener **Caution:** Refer to Fastener Caution in the Preface section.
3	Centre Pillar Trim Panel Assembly **Procedure** Pull the trim panel toward the inside of the vehicle to disengage the retainers.

© Copyright Chevrolet. All rights reserved

Body Lock Pillar Upper Trim Panel Replacement

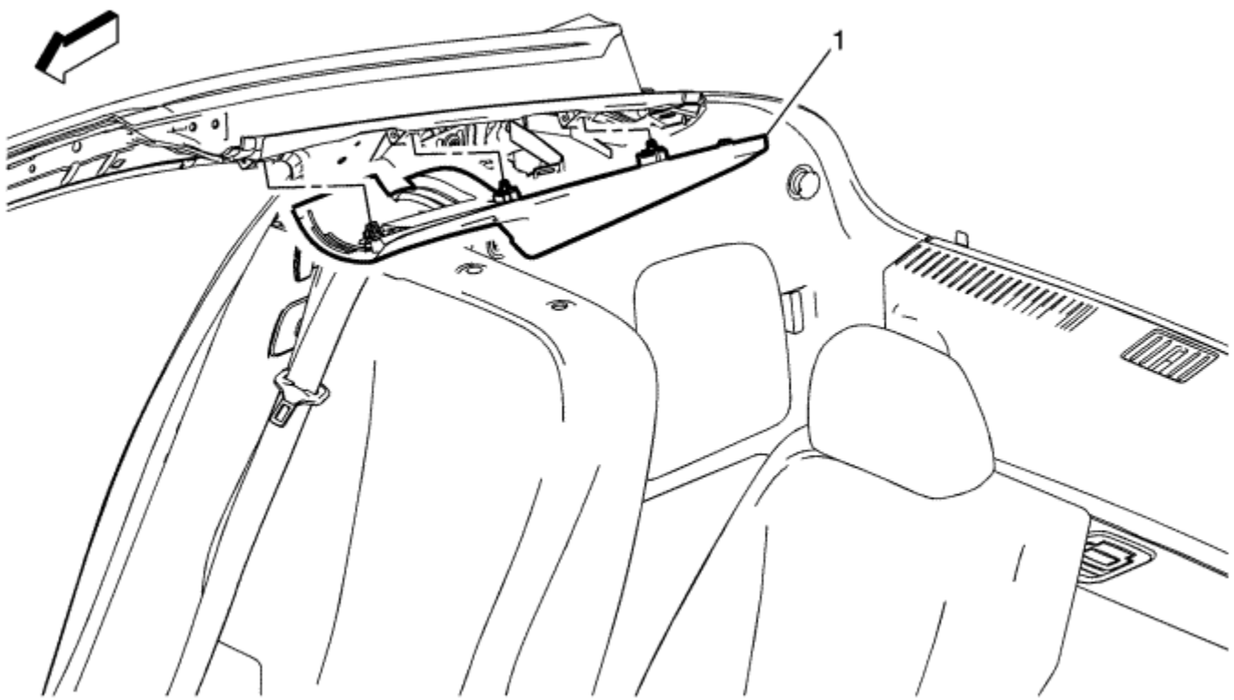

Callout	Component Name
Preliminary Procedure Disable the SIR system. Refer to SIR Disabling and Enabling .	
	Body Lock Pillar Upper Trim Panel

1	**Procedure** 1. Pull outward from the top front to release the upper portion of the moulding, then move upward to release the tabs. 2. Release the tether to remove.

© Copyright Chevrolet. All rights reserved

Quarter Inner Trim Finish Panel Replacement

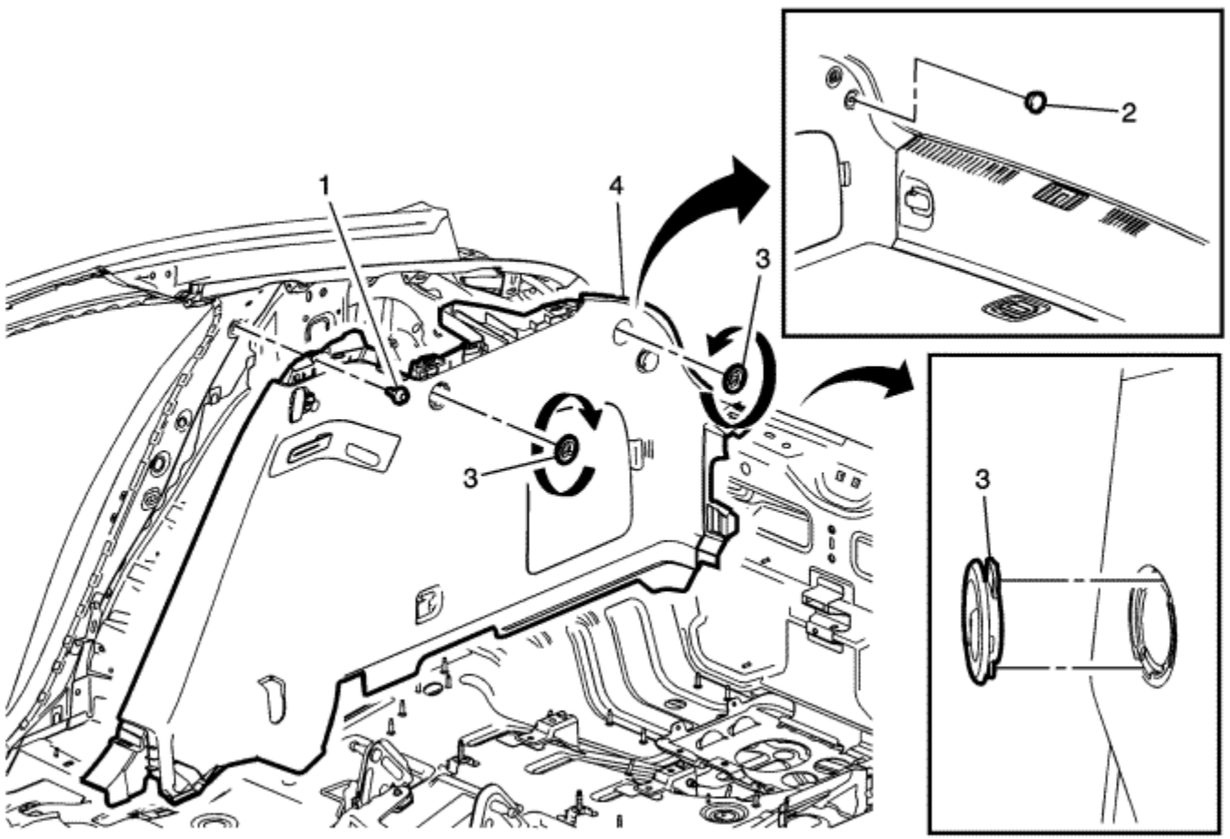

Callout	Component Name
Preliminary Procedures	

1. Remove the rear side door opening floor carpet retainer. Refer to Rear Side Door Opening Floor Carpet Retainer Replacement .
2. Remove the rear seat cushion. Refer to Rear Seat Cushion Replacement .
3. Remove rear seat back. Refer to Rear Seat Back Cushion Replacement .

4. Remove the body lock pillar upper trim panel. Refer to Body Lock Pillar Upper Trim Panel Replacement .
5. Remove the rear compartment floor panel trim. Refer to Rear Compartment Floor Panel Trim Replacement .
6. Remove the rear compartment floor stowage trim compartment. Refer to Rear Compartment Floor Stowage Trim Compartment Replacement .
7. Remove the rear end trim finish panel. Refer to Rear End Trim Finish Panel Replacement .
8. Reposition the rear shoulder belt around the panel and through the opening in the panel. Refer to Shoulder Belt Replacement - Rear .

1	Quarter Inner Trim Finish Panel Fastener **Caution:** Refer to Fastener Caution in the Preface section.
2	Convenience Net Upper Retainer
3	Cargo Screen Retainer Assembly (Qty: 2) **Procedure** 1. Turn the left front and right rear cargo screen retainer anticlockwise one quarter turn to disengage the 2 integral tabs. 2. Turn the left rear and right front cargo screen retainer clockwise one quarter turn to disengage the 2 integral tabs.
4	Quarter Inner Trim Finish Panel **Procedure** 1. Use a trim tool or equivalent to aid in removal. 2. Remove the quarter trim panel cover. 3. Disconnect the electrical connector, if necessary. **Tip** After installation of the quarter inner trim panel, ensure the rear seat belt is not trapped under the trim panel. Pull up on the belt to verify full movement of the belt.

© Copyright Chevrolet. All rights reserved

Rear End Trim Finish Panel Replacement

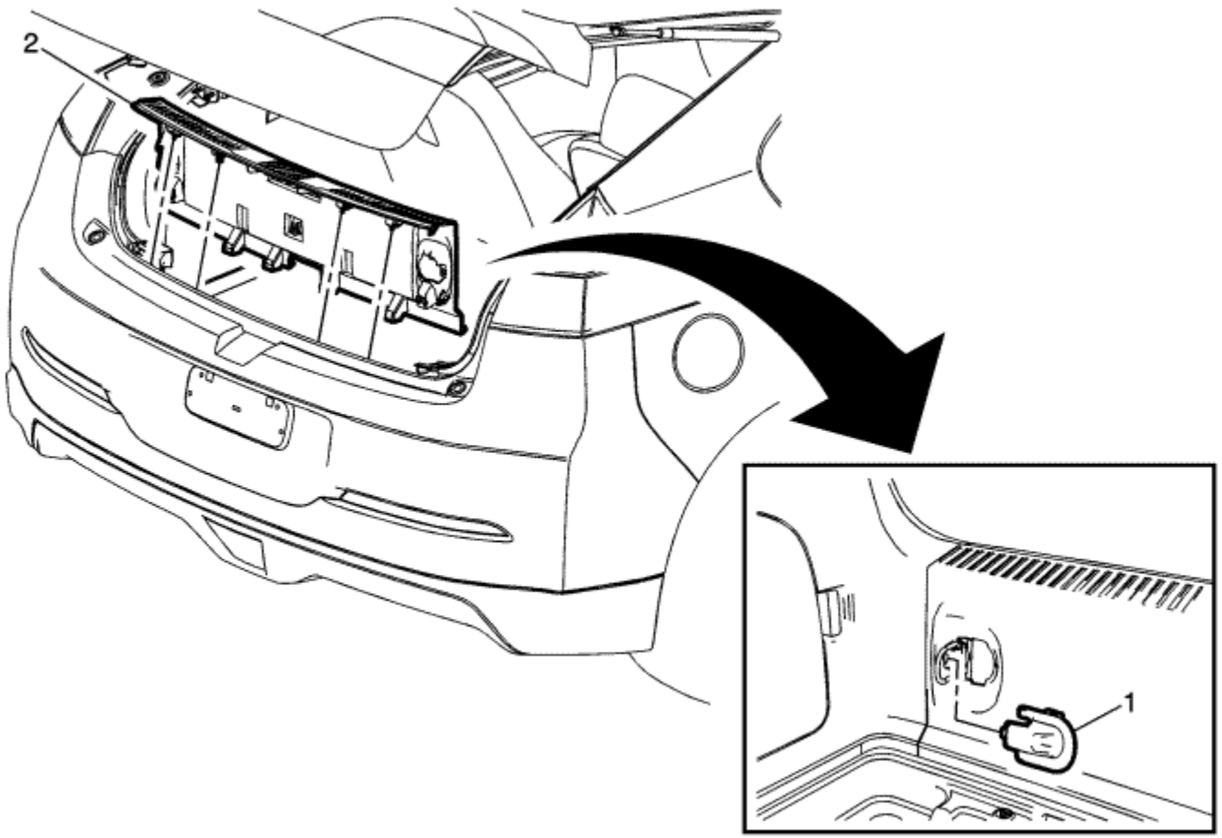

Callout	Component Name

Preliminary Procedure

1. Remove the rear compartment floor panel trim. Refer to Rear Compartment Floor Panel Trim Replacement .
2. Remove the rear compartment floor stowage trim compartment. Refer to Rear Compartment Floor Stowage Trim Compartment Replacement .
3. Partially remove the tailgate weatherstrip. Refer to Tailgate Weatherstrip Replacement .

1	Cargo Tie Down Loop Trim Cover (Qty: 2)
2	Rear End Trim Finish Panel Assembly **Procedure** Tilt the rear compartment floor panel trim up to gain access to the panel.

© Copyright Chevrolet. All rights reserved

Rear Compartment Floor Stowage Compartment Cover Handle Replacement

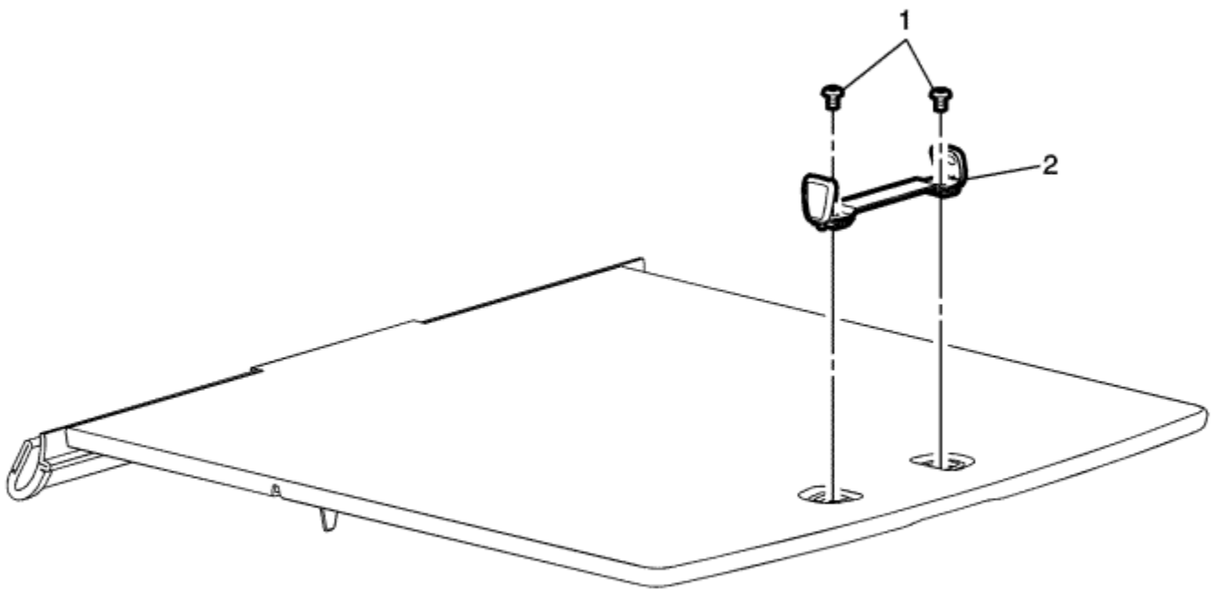

Callout	Component Name
1	Rear Compartment Floor Stowage Compartment Cover Handle Fastener **Caution:** Refer to Fastener Caution in the Preface section. **Procedure**

	Open cover to access fastener.
2	Rear Compartment Floor Stowage Compartment Cover Handle Assembly

© Copyright Chevrolet. All rights reserved

Rear Compartment Floor Stowage Trim Compartment Replacement

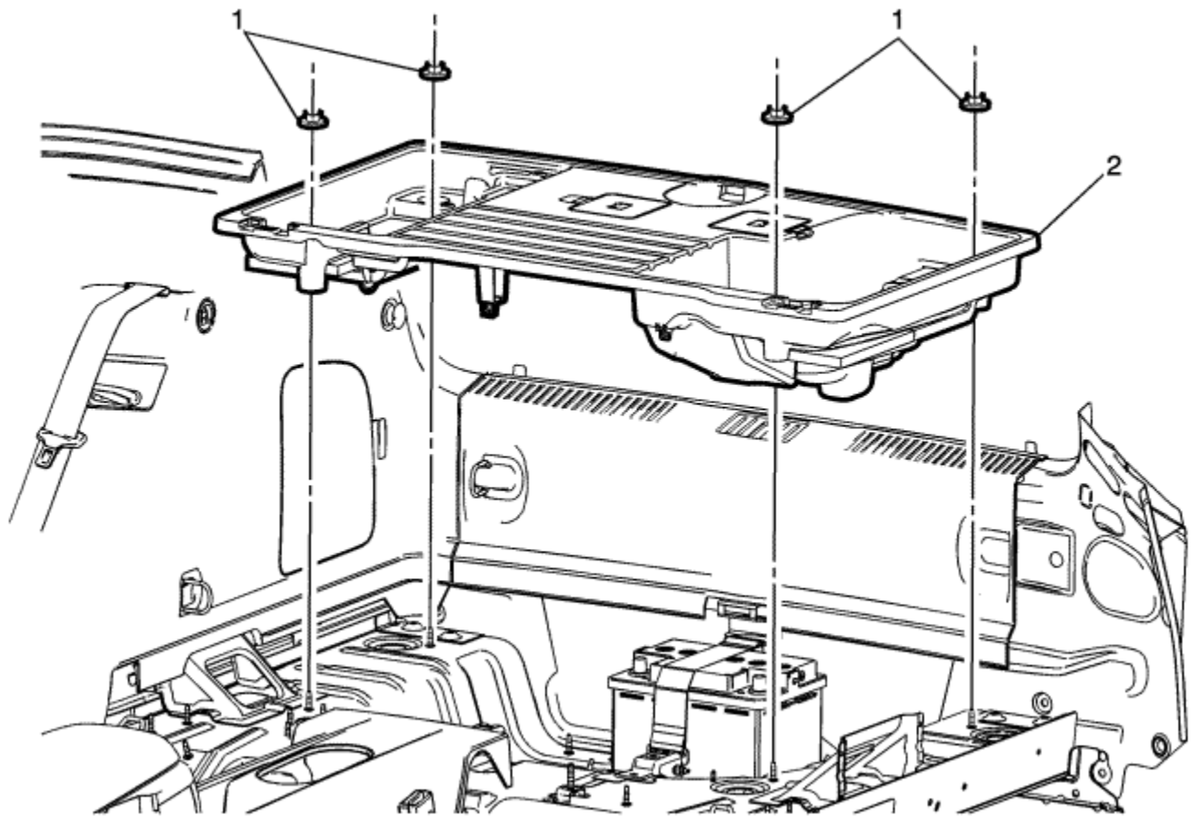

Callout	Component Name
Preliminary Procedure Remove the rear compartment floor panel trim. Refer to Rear Compartment Floor Panel Trim Replacement .	
	Load Floor Front Trim Panel Fastener (Qty: 4)

1	**Caution:** Refer to Fastener Caution in the Preface section. **Tighten** 6 N·m (53 lb in)
2	Rear Compartment Floor Stowage Trim Compartment Assembly

© Copyright Chevrolet. All rights reserved

Rear Compartment Floor Panel Trim Replacement

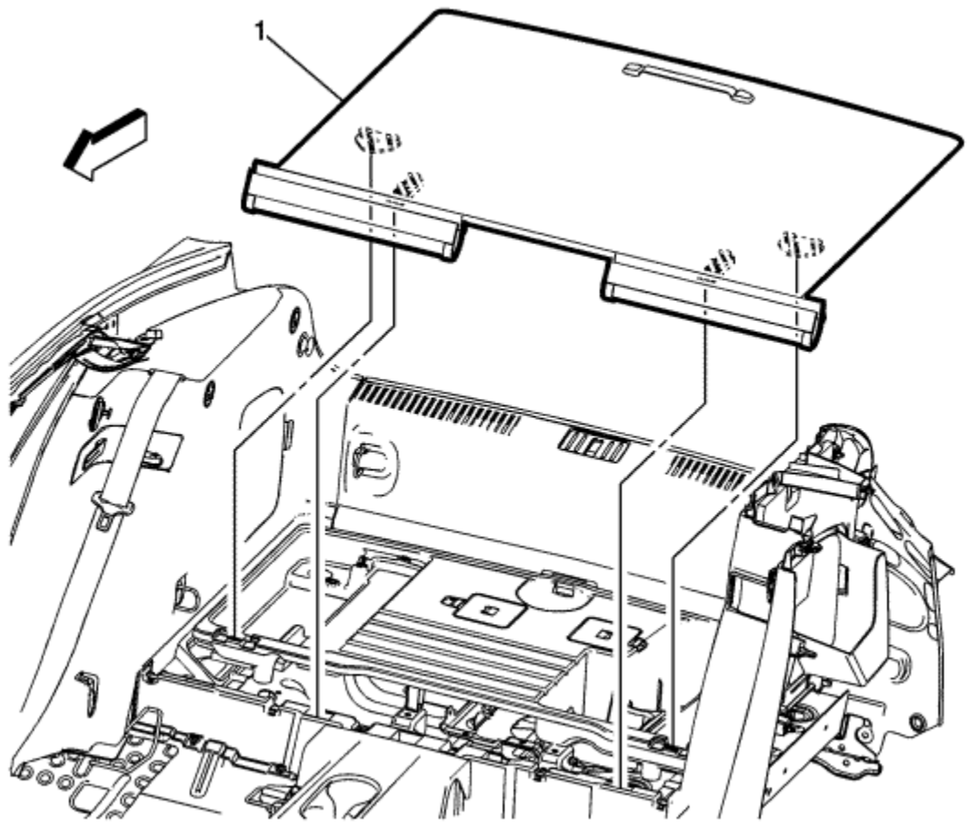

Callout	Component Name
1	Rear Compartment Floor Panel Trim Assembly **Tip** 1. Lift floor trim panel up to unsnap the clips, then slide the floor panel out to release the retainers.

2. The carpet flaps on the forward side of the floor panel trim are installed with the rear seats in the folded down position.
3. Please note the location of the 2 integral retainers and hooks.

© Copyright Chevrolet. All rights reserved

Rear Side Door Trim Replacement

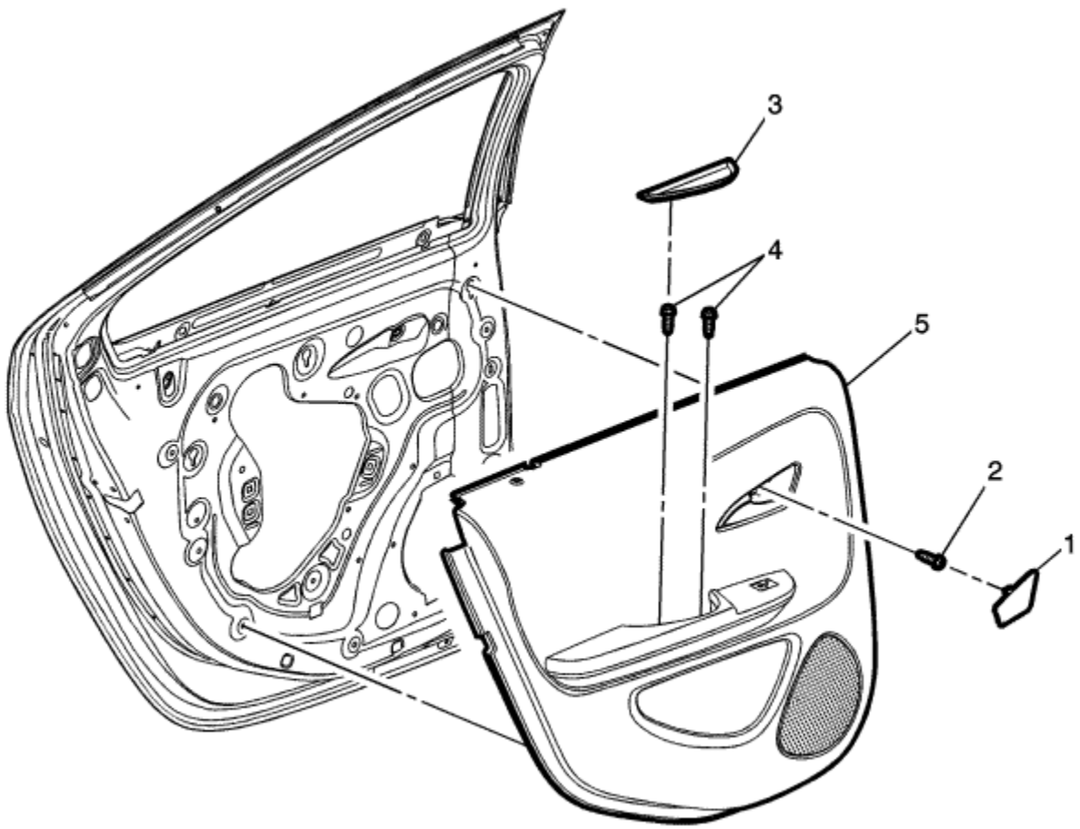

Callout	Component Name
1	Rear Side Door Inside Handle Bolt Cap
2	Rear Side Door Inside Handle Bolt Fastener **Caution:** Refer to Fastener Caution in the Preface section.

	Procedure Pull handle back to remove cap. Use suitable tool to unsnap.
3	Rear Side Door Armrest Pull Cup Cover
4	Rear Side Door Armrest Pull Cup Fastener (Qty: 2)
5	Rear Side Door Trim Panel **Procedure** 1. Use the appropriate plastic trim tool to aid in the removal of the door trim. 2. Pull upwards on the door lock retainer cable to disengage. 3. Disconnect the electrical connector. **Tip** When the door trim is removed, all retainers should be replaced. Failure to replace the retainers may cause loss of retainer retention.

© Copyright Chevrolet. All rights reserved

Liftgate Window Side Garnish Moulding Replacement

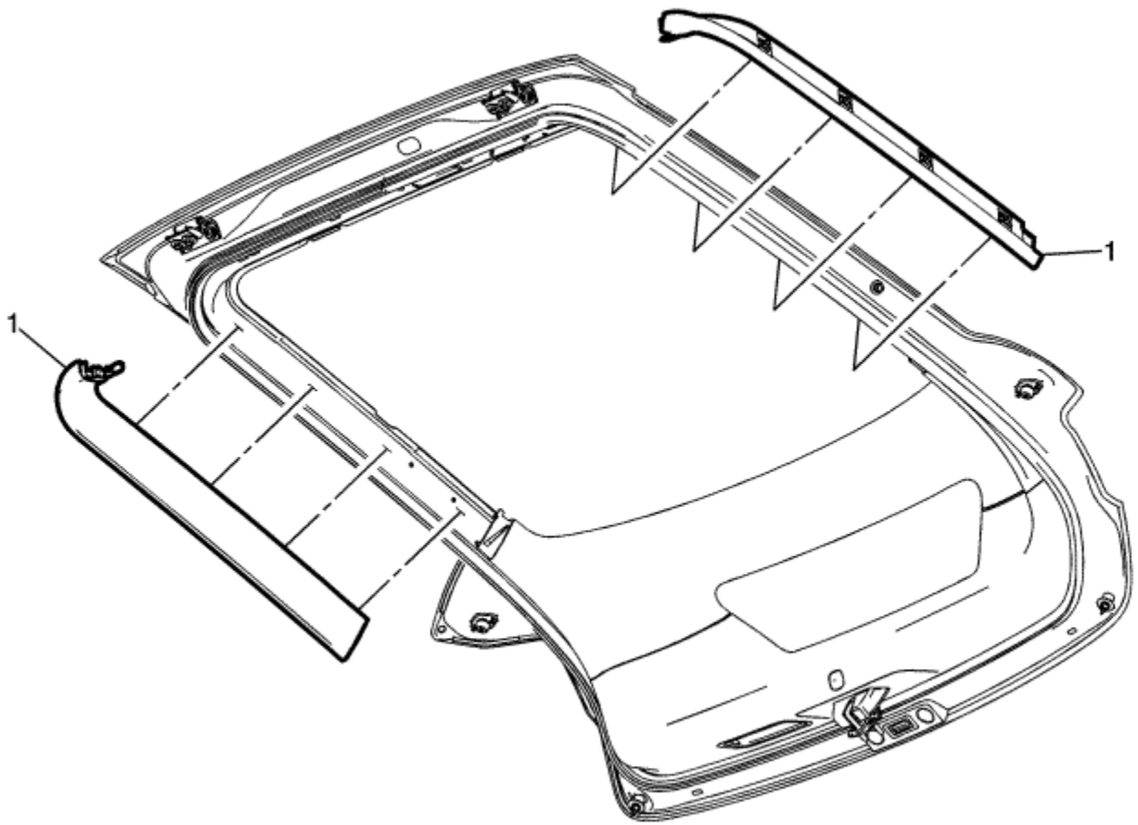

Callout	Component Name
Preliminary Procedure Remove the tailgate window upper garnish moulding. Refer to Tailgate Window Upper Garnish Moulding Replacement .	
	Tailgate Window Side Garnish Moulding Assembly

1	**Procedure** Pull outward to disengage the retainers.

© Copyright Chevrolet. All rights reserved

Tailgate Window Upper Garnish Moulding Replacement

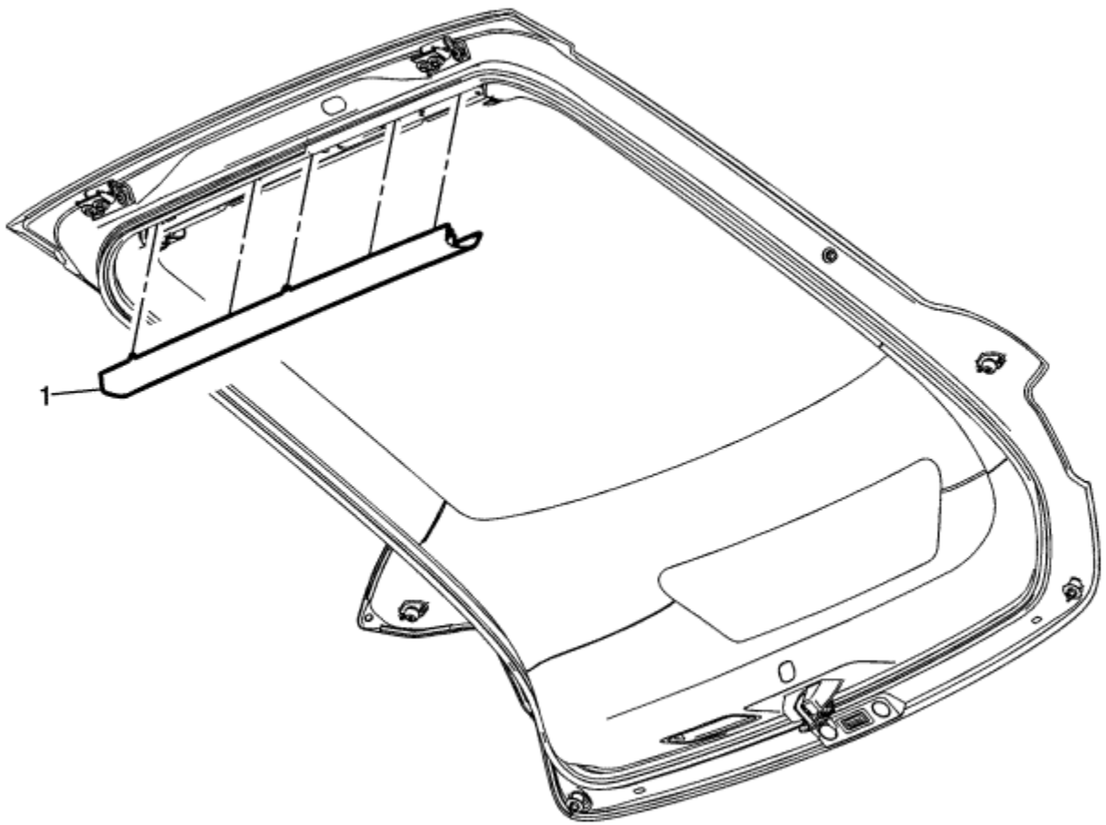

Callout	Component Name
1	Tailgate Window Upper Garnish Moulding Assembly **Procedure** Pull outward to disengage the retainers.

© Copyright Chevrolet. All rights reserved

Liftgate Upper Trim Finish Panel Replacement

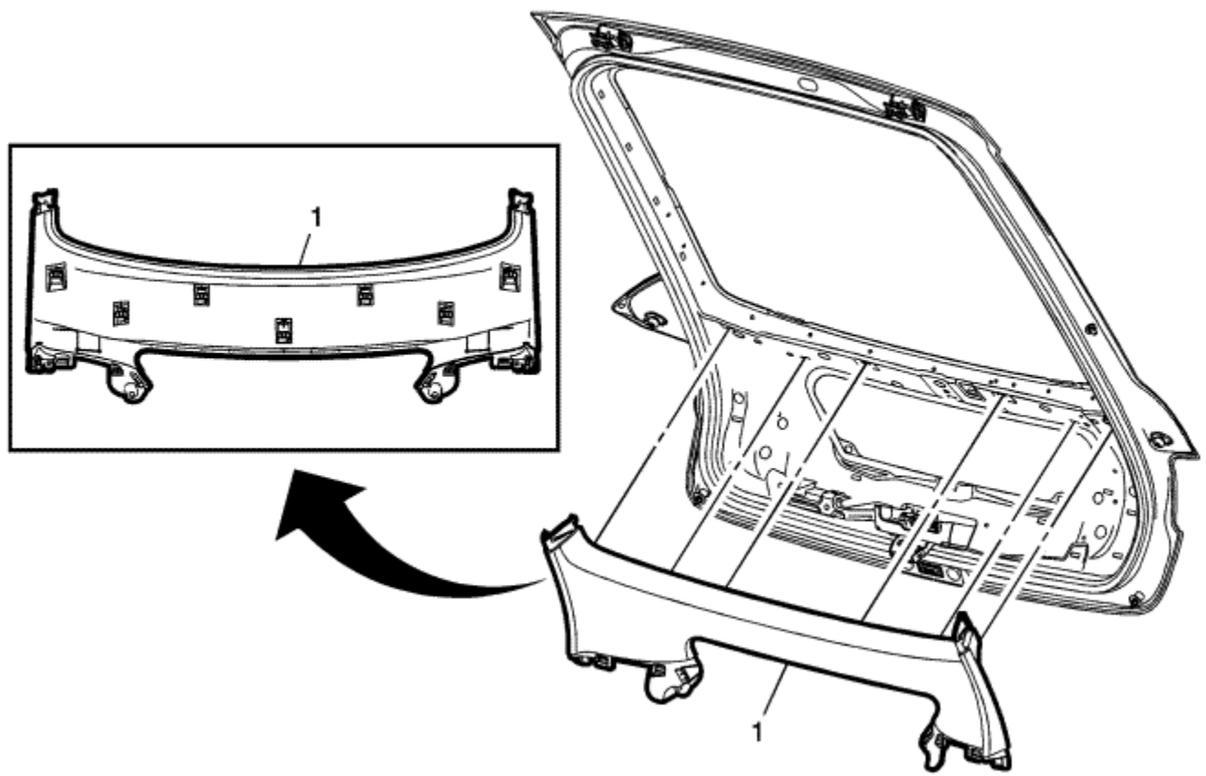

Callout	Component Name
Preliminary Procedure	
1. Remove the liftgate window side garnish molding. Refer to Liftgate Window Side Garnish Moulding Replacement . 2. Remove the liftgate lower trim finish panel. Refer to Liftgate Lower Trim Finish Panel Replacement .	

1	Tailgate Upper Trim Finish Panel Assembly **Procedure** 1. Use a trim panel removal tool to aid in the removal of the trim panel from the tailgate assembly. 2. Disconnect the electrical connector, if equipped. **Tip** Remove the upper and lower tailgate trim finish panels together and then separate them.

© Copyright Chevrolet. All rights reserved

Liftgate Lower Trim Finish Panel Replacement

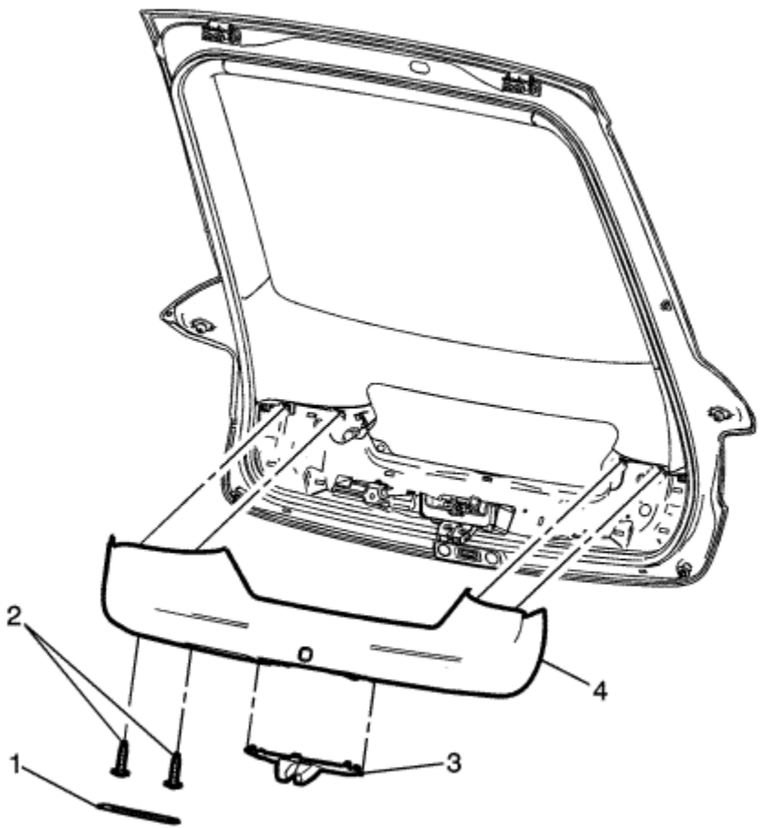

Callout	Component Name
Preliminary Procedures 1. Remove the liftgate window side garnish molding. Refer to Liftgate Window Side Garnish Moulding Replacement . 2. Remove the tailgate window upper garnish moulding. Refer to Tailgate Window Upper Garnish Moulding Replacement .	

1	Tailgate Inside Pull Handle Cover
2	Tailgate Inside Pull Handle Cover Fastener (Qty: 2) **Caution:** Refer to Fastener Caution in the Preface section.
3	Tailgate Latch Closeout Cover
4	Tailgate Lower Trim Finish Panel Assembly **Procedure** 1. Use a trim panel removal tool to aid in the removal of the trim panel from the tailgate assembly. 2. Disconnect the electrical connector, if equipped. **Tip** Remove the upper and lower tailgate trim finish panels together and then separate them.

© Copyright Chevrolet. All rights reserved

Body Side Air Outlet Deflector Replacement

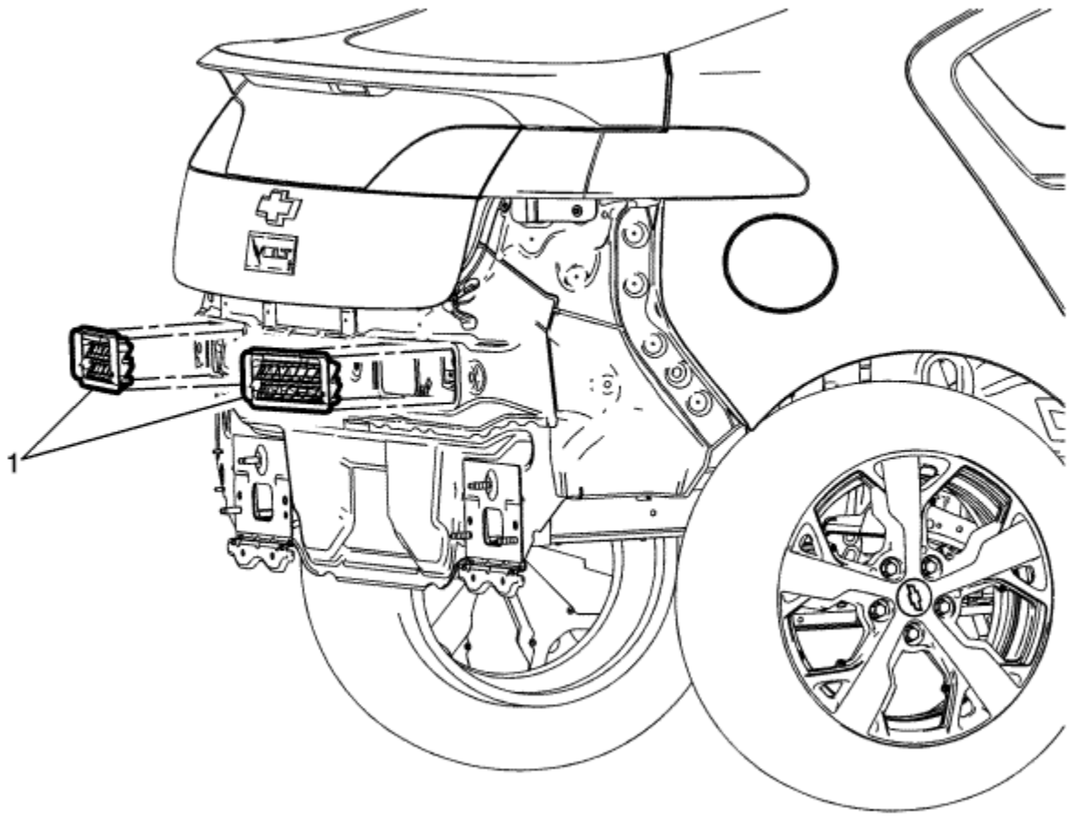

Callout	Component Name
Preliminary Procedure Remove the rear bumper fascia. Refer to Rear Bumper Fascia Removal and Installation : Volt → Ampera	
1	Body Side Air Outlet Deflector Replacement

© Copyright Chevrolet. All rights reserved

Fastener Tightening Specifications

Application	Specification	
	Metric	English
Front Wing Bolts	9 N·m	80 lb in
Front Side Door Check Link to Body Side Screw	22 N·m	16 lb ft
Front Side Door Check Link to Door Side Nuts	10 N·m	89 lb in
Front Side Door Hinge to Body Side Upper/Lower Bolts	30 N·m	22 lb ft
Front Side Door Hinge to Door Side Upper/Lower Bolts	30 N·m	22 lb ft
Front Suspension Strut Housing Brace Bolts	10 N·m	89 lb in
Bonnet Hinge Bolts	25 N·m	18 lb ft
Bonnet Hinge Nuts	25 N·m	18 lb ft
Bonnet Primary and Secondary Latch Bolts	25 N·m	18 lb ft
Liftgate Hinge and Striker Bolts	25 N·m	18 lb ft
Rear Compartment Lid Bolts	25 N·m	18 lb ft
Rear Compartment Lid Hinge Fastener	22 N·m	16 lb ft
Rear Side Door Check Link to Body Side Screw	22 N·m	16 lb ft
Rear Side Door Check Link to Door Side Nuts	10 N·m	89 lb in
Rear Side Door Hinge to Body Side Upper/Lower Bolts	30 N·m	22 lb ft
Rear Side Door Hinge to Door Upper/Lower Bolts	30 N·m	22 lb ft

© Copyright Chevrolet. All rights reserved

DTC B3006

Diagnostic Instructions

- Perform the Diagnostic System Check - Vehicle prior to using this diagnostic procedure.
- Review Strategy Based Diagnosis for an overview of the diagnostic approach.
- Diagnostic Procedure Instructions provides an overview of each diagnostic category.

DTC Descriptors

DTC B3006 01: Hood Ajar Circuit Short to Battery

DTC B3006 02: Hood Ajar Circuit Short to Ground

DTC B3006 04: Hood Ajar Circuit Open

Diagnostic Fault Information

Circuit	Short to Ground	Open/High Resistance	Short to Voltage	Signal Performance
Signal	B3006 02	B3006 04	B3006 01	-
Ground	-	B3006 04	-	-

Circuit/System Description

The body control module (BCM) applies B+ to the bonnet ajar signal circuit and monitors the voltage to determine the position of the bonnet. The bonnet ajar switch contains a multiplexed resistor. This resistor will vary the voltage seen by the BCM by pulling down the applied voltage based on the position of the switch.

Conditions for Running the DTC

The BCM continuously monitors for this DTC

Conditions for Setting the DTC

B3006 01

The BCM detects that the bonnet ajar switch signal circuit is shorted to battery.

B3006 02

The BCM detects that the bonnet ajar switch signal circuit is shorted to ground.

B3006 04

The BCM detects that the bonnet ajar switch signal circuit is open.

Action Taken When the DTC Sets

- The bonnet ajar switch input will be ignored as a content theft deterrent trigger.
- Remote vehicle start will be disabled.

Conditions for Clearing the DTC

- A current DTC will clear when the conditions for setting the DTC are no longer present.
- A history DTC will clear after 40 malfunction free ignition cycles.

Reference Information

Schematic Reference

Immobiliser Schematics

Connector End View Reference

Component Connector End Views

Description and Operation

Keyless Entry System Description and Operation

Electrical Information Reference

- Circuit Testing
- Connector Repairs
- Testing for Intermittent Conditions and Poor Connections
- Wiring Repairs

Scan Tool Reference

Control Module References for scan tool information

Circuit/System Verification

1. Vehicle in Service Mode.
2. Observe the scan tool Bonnet Ajar Switch parameter. With the bonnet open, the Bonnet Ajar Switch parameter should be Open. With the bonnet closed, the Bonnet Ajar Switch parameter should be Closed.
   If the parameter does not change
   Refer to Circuit/System Testing.
   If the parameter changes
3. All OK.

Circuit/System Testing

1. Vehicle OFF and all vehicle systems OFF, disconnect the harness connector at the B55 bonnet ajar switch. It may take up to 2 minutes for all vehicle systems to power down.
2. Test for less than 10 Ω between the ground circuit terminal C and ground.
   If 10 Ω or greater
   2.1. Vehicle OFF
   2.2. Test for less than 2 Ω in the ground circuit end to end.
   If 2 Ω or greater, repair the open/high resistance in the circuit.
   If less than 2 Ω, repair the open/high resistance in the ground connection.
   If less than 10 Ω
3. Vehicle in Service Mode.
4. Test for B+ between the signal circuit terminal B and ground.
   If less than B+
   4.1. Vehicle OFF, disconnect the harness connector at the BCM.
   4.2. Test for infinite resistance between the B+ circuit and ground.
   If less than infinite resistance, repair the short to ground on the circuit.
   If Infinite resistance.
   4.3. Test for less than 2 Ω in the B+ circuit end to end.

If 2 Ω or greater, repair the open/high resistance in the circuit.

If less than 2 Ω, replace the BCM.

If B+

5. Vehicle OFF, disconnect the X4 and X7 harness connector at the K9 BCM. Vehicle in Service Mode.
6. Test for less than 1 V between the signal circuit terminal B and ground.

   If 1 V or greater

   Repair the short to voltage on the circuit.

   If less than 1 V

7. Test or replace the B55 bonnet ajar switch.

Repair Instructions

Perform the Diagnostic Repair Verification after completing the diagnostic procedure.

- Bonnet Primary and Secondary Catch Replacement : Volt → Ampera
- Control Module References for BCM replacement, programming and setup

&#169© Copyright Chevrolet. All rights reserved

DTC P257D-P257F

Diagnostic Instructions

- Perform the Diagnostic System Check - Vehicle prior to using this diagnostic procedure.
- Review Strategy Based Diagnosis for an overview of the diagnostic approach.
- Diagnostic Procedure Instructions provides an overview of each diagnostic category.

DTC Descriptors

DTC P257D: Bonnet Switch Performance

DTC P257E: Bonnet Switch Circuit Low Voltage

DTC P257F: Bonnet Switch Circuit High Voltage

Diagnostic Fault Information

Circuit	Short to Ground	Open/High Resistance	Short to Voltage	Signal Performance
Bonnet Ajar Switch Signal 1	B3006 02	B3006 04	B3006 01	-
Bonnet Ajar Switch Signal 2	P257E	P257F	P257F	P257D
Ground	-	B3006 04, P257F	-	-

Circuit/System Description

The hybrid powertrain control module 2 applies B+ to the bonnet ajar signal 2 circuit and monitors the voltage to determine the position of the bonnet. The bonnet ajar switch contains a multiplexed resistor. This resistor will vary the voltage seen by the hybrid powertrain control module 2 by pulling down the applied voltage based on the position of the switch.

Conditions for Running the DTC

Propulsion system is active.

Conditions for Setting the DTC

P257D

The bonnet ajar switch signal 2 voltage as measured by the hybrid powertrain control module 2 is not within a valid voltage range.

P257E

The hybrid powertrain control module 2 detects a short to ground in the bonnet ajar signal input to the hybrid powertrain control module 2.

P257F

The hybrid powertrain control module 2 detects a short to voltage or an open/high resistance in the bonnet ajar signal input to the hybrid powertrain control module 2.

Action Taken When the DTC Sets

The engine will start and run whenever the vehicle is in Service Mode or the vehicle speed is less than 5 kph (3 mph).

Conditions for Clearing the DTC

DTCs P257D, P257E, and P257F are Type B DTCs.

Reference Information

Schematic Reference

Immobiliser Schematics

Connector End View Reference

Component Connector End Views

Description and Operation

Bonnet Ajar Indicator Description and Operation

Electrical Information Reference

- Circuit Testing
- Connector Repairs
- Testing for Intermittent Conditions and Poor Connections
- Wiring Repairs

Scan Tool Reference

Control Module References for scan tool information

Circuit/System Verification

1. Vehicle in Service Mode.
2. Observe the scan tool ECM Bonnet Position parameter. With the bonnet open, the Bonnet Position parameter should be Open. With the bonnet closed, the Bonnet Position parameter should be Closed.
   If the parameter does not change
   Refer to Circuit/System Testing.
   If the parameter changes
3. All OK.

Circuit/System Testing

1. Vehicle OFF and all vehicle systems OFF, disconnect the harness connector at the B55 bonnet ajar switch. It may take up to 2 minutes for all vehicle systems to power down.
2. Test for less than 10 Ω between the ground circuit terminal C and ground.
   If 10 Ω or greater
   2.1. Vehicle OFF
   2.2. Test for less than 2 Ω in the ground circuit end to end.
   If 2 Ω or greater, repair the open/high resistance in the circuit.
   If less than 2 Ω, repair the open/high resistance in the ground connection.
   If less than 10 Ω
3. Vehicle in Service Mode.
4. Verify DTC P257F is set as current
   If DTC P257F is not set as current
   4.1. Vehicle OFF, disconnect the harness connector at the ECM.
   4.2. Test for infinite resistance between the signal circuit and ground.
   If less than infinite resistance, repair the short to ground on the circuit.
   If infinite resistance, replace the ECM
   If DTC P257F is set as current

5. Install a 5 A fused jumper wire between the signal circuit terminal A and earth.
6. Verify DTC P257E is set as current.

   If DTC P257E is not set as current

   6.1. Vehicle OFF, disconnect the harness connector at the ECM.
   6.2. Test for less than 1 V between the signal circuit and earth.
   If 1 V or greater, repair the short to voltage on the circuit.
   If less than 1 V
   6.3. Test for less than 2 Ω in the signal circuit end to end.
   If 2 Ω or greater, repair the open/high resistance in the circuit.
   If less than 2 Ω, replace the BCM.

   If DTC P257E is set as current

7. Test or replace the B55 bonnet ajar switch.

Repair Instructions

Perform the Diagnostic Repair Verification after completing the diagnostic procedure.

- Bonnet Primary and Secondary Catch Replacement : Volt → Ampera
- Control Module References for hybrid powertrain control module 2 replacement, programming and setup

&#169© Copyright Chevrolet. All rights reserved

Symptoms - Bolted Exterior Body Panels and Closures

Important: The following steps must be completed before using the symptom tables.

1. Perform the Diagnostic System Check - Vehicle before using the symptom tables in order to verify that all of the following are true:
   - There are no DTCs set.
   - The control modules can communicate via the serial data links.
2. Review the system operation in order to familiarise yourself with the system functions. Refer to Bonnet Ajar Indicator Description and Operation .

Visual/Physical Inspection

- Inspect for aftermarket devices which could affect the operation of the systems. Refer to Checking Aftermarket Accessories .
- Inspect the easily accessible or visible system components for obvious damage or conditions which could cause the symptom.

Intermittent

Faulty electrical connections or wiring may be the cause of intermittent conditions. Refer to Testing for Intermittent Conditions and Poor Connections .

Symptom List

Refer to Bonnet Ajar Indicator/Message Malfunction in order to diagnose the symptom.

&#169© Copyright Chevrolet. All rights reserved

Bonnet Ajar Indicator/Message Malfunction

Diagnostic Instructions

- Perform the Diagnostic System Check - Vehicle prior to using this diagnostic procedure.
- Review Strategy Based Diagnosis for an overview of the diagnostic approach.
- Diagnostic Procedure Instructions provides an overview of each diagnostic category.

Diagnostic Fault Information

Circuit	Short to Ground	Open/High Resistance	Short to Voltage	Signal Performance
Signal	B3006 02	B3006 04	B3006 01	-
Ground	-	B3006 04	-	-

Circuit/System Description

The body control module (BCM) applies B+ to the bonnet ajar signal circuit and monitors the voltage to determine the position of the bonnet. The bonnet ajar switch contains a multiplexed resistor. This resistor will vary the voltage seen by the BCM by pulling down the applied voltage based on the position of the switch.

Reference Information

Schematic Reference

Immobiliser Schematics

Connector End View Reference

Component Connector End Views

Description and Operation

Keyless Entry System Description and Operation

Electrical Information Reference

- Circuit Testing
- Connector Repairs
- Testing for Intermittent Conditions and Poor Connections
- Wiring Repairs

Scan Tool Reference

Control Module References for scan tool information

Circuit/System Verification

1. Vehicle in Service Mode.
2. Observe the scan tool Bonnet Ajar Switch parameter. With the bonnet open, the Bonnet Ajar Switch parameter should be Open. With the bonnet closed, the Bonnet Ajar Switch parameter should be Closed.
   If the parameter does not change
   Refer to Circuit/System Testing.
   If the parameter changes
3. All OK.

Circuit/System Testing

1. Vehicle OFF and all vehicle systems OFF, disconnect the harness connector at the B55 bonnet ajar switch. It may take up to 2 minutes for all vehicle systems to power down.
2. Test for less than 10 Ω between the ground circuit terminal C and ground.
   If 10 Ω or greater
   2.1. Vehicle OFF
   2.2. Test for less than 2 Ω in the ground circuit end to end.
   If 2 Ω or greater, repair the open/high resistance in the circuit.
   If less than 2 Ω, repair the open/high resistance in the ground connection.
   If less than 10 Ω
3. Vehicle in Service Mode.
4. Test for B+ between the signal circuit terminal B and ground.
   If less than B+
   4.1. Vehicle OFF, disconnect the harness connector at the BCM.
   4.2. Test for infinite resistance between the B+ circuit and ground.
   If less than infinite resistance, repair the short to ground on the circuit.

If Infinite resistance.

4.3. Test for less than 2 Ω in the B+ circuit end to end.
If 2 Ω or greater, repair the open/high resistance in the circuit.
If less than 2 Ω, replace the BCM.

If B+

5. Vehicle OFF, disconnect the X4 and X7 harness connector at the K9 BCM. Vehicle in Service Mode.
6. Test for less than 1 V between the signal circuit terminal B and ground.
   If 1 V or greater
   Repair the short to voltage on the circuit.
   If less than 1 V
7. Test or replace the B55 bonnet ajar switch.

Repair Instructions

Perform the Diagnostic Repair Verification after completing the diagnostic procedure.

- Bonnet Primary and Secondary Catch Replacement : Volt → Ampera
- Control Module References for BCM replacement, programming and setup

&#169© Copyright Chevrolet. All rights reserved

Front Suspension Strut Housing Brace Replacement

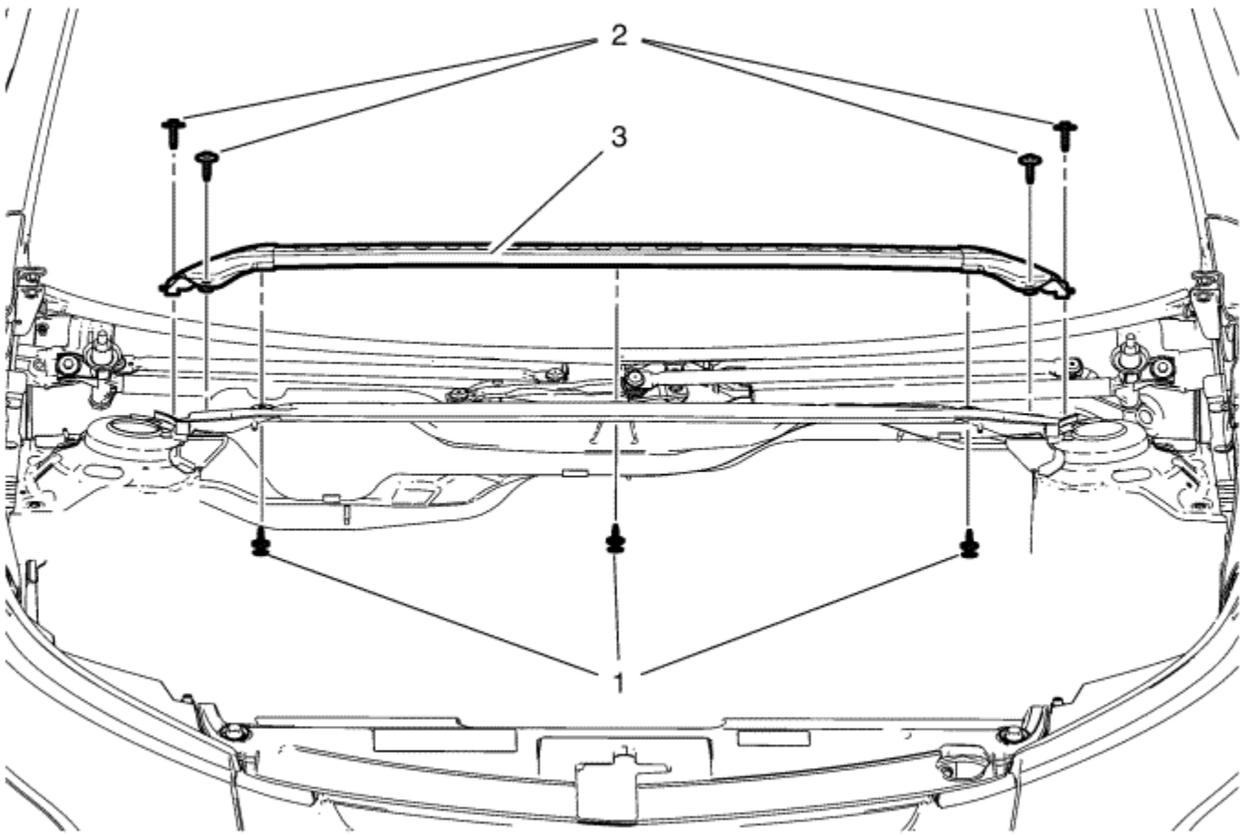

Callout	Component Name
Preliminary Procedure Remove the air inlet grille panel. Refer to Air Inlet Grille Panel Replacement .	
	Front Suspension Strut Housing Brace Push--In Retainer (Qty: 3)

1	**Procedure** Remove the plenum upper panel insulator.
2	Front Suspension Strut Housing Brace Bolt (Qty: 4) **Caution :** Refer to Fastener Caution in the Preface section. **Tighten** 10 N·m (89 lb in)
3	Front Suspension Strut Housing Brace

© Copyright Chevrolet. All rights reserved

Bonnet Primary Catch Release Cable Replacement

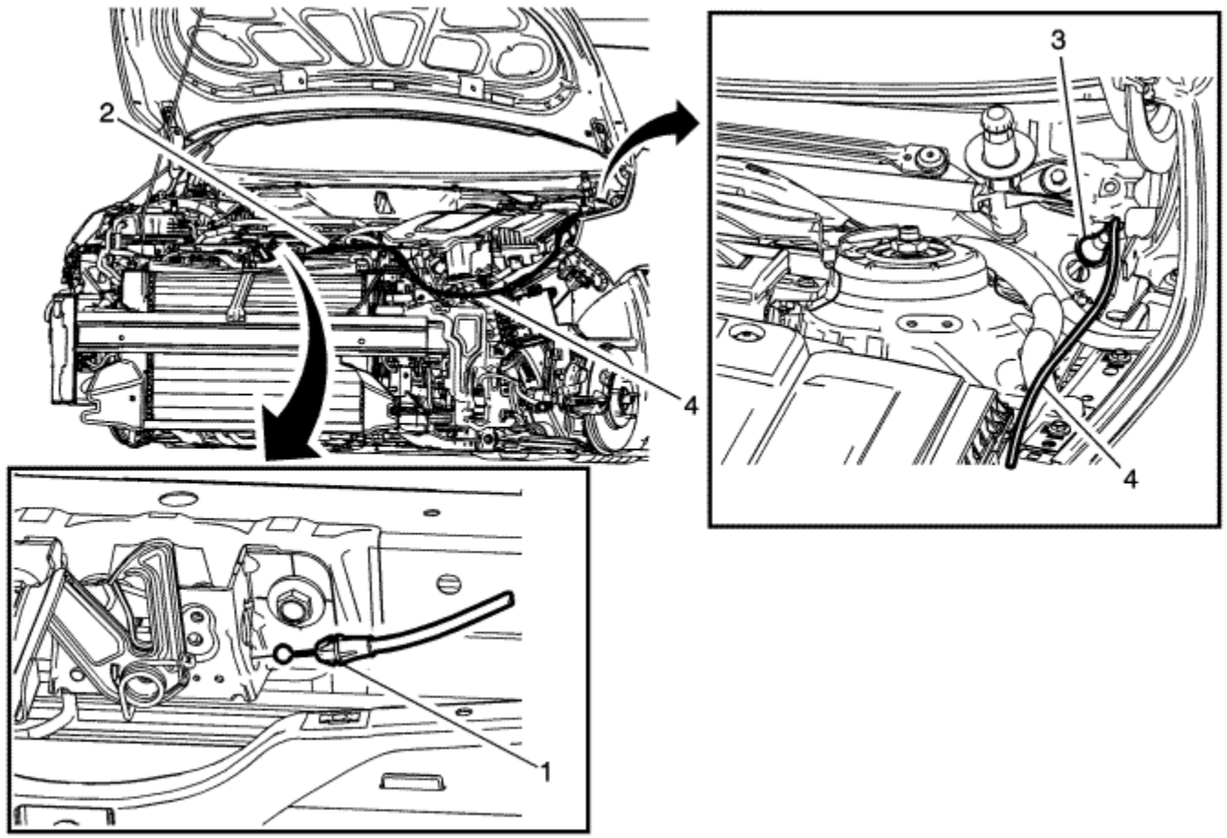

Callout	Component Name
Preliminary Procedures	

1. Remove the front compartment side sight shield. Refer to Front Compartment Side Sight Shield Replacement : Volt → Ampera .
2. Remove the front fascia. Refer to Front Bumper Fascia Removal and Installation : Volt → Ampera .
3. Remove the left headlamp. Refer to Headlamp Replacement : Volt → Ampera .

4. Remove the air inlet grille. Refer to Air Inlet Grille Panel Replacement .

1	Bonnet Primary Latch Cable **Procedure** Disconnect the bonnet primary latch release cable from the primary bonnet latch. Refer to Bonnet Primary and Secondary Catch Replacement : Volt → Ampera .
2	Bonnet Primary Latch Release Cable Retainer **Procedure** Disconnect the bonnet release cable retainers from the bonnet release cable.
3	Bonnet Primary Latch Release Cable Grommet **Procedure** Compress the grommet and press through the hole toward the passenger compartment.
4	Bonnet Primary Catch Release Cable **Procedure** 1. Remove the bonnet primary latch release cable handle by pressing the release cable handle upward to release the retainers from the instrument panel bracket. 2. Pull the bonnet primary latch release cable out from the passenger compartment.

© Copyright Chevrolet. All rights reserved

Front Side Door Adjustment

Removal Procedure

Up/Down or In/Out Adjustment

1. Open the door.

   Caution : Refer to Paint Damage Caution in the Preface section.

   Note : The door side upper and lower hinge bolts must remain tight enough to retain door adjusted position.

2. Apply masking tape to the wing and the door edges.

   Loosen the door side hinge bolts.

   Do not remove the bolts from the door.

3. Adjust the door up or down by repositioning the door as needed.
4. Adjust the door in or out by repositioning the door as needed.

Installation Procedure

1. If doing this portion of the adjustment to the (Driver's Door Only) do the following: disable the high voltage system. Refer to High Voltage Disabling .
2. Remove the battery changer receptacle. Refer to Drive Motor Battery Charger Receptacle Replacement .
3. Remove the charger port door actuator. Refer to Charge Port Housing Replacement .

   Caution : Refer to Fastener Caution in the Preface section.

4. Install the door side hinge bolts.

   Tighten
   Tighten the bolts to 30 N·m (22 lb ft).

5. Inspect the door for proper operation and alignment.
6. Remove the masking tape.

Removal Procedure

Fore/Aft Adjustment

Caution : Refer to Paint Damage Caution in the Preface section.

Note : The door side upper and lower hinge bolts must remain tight enough to retain door adjusted position.

1. Apply masking tape to the wing and door edges.

   Loosen the body side hinge bolts.

   Do not remove the bolts from the door.

2. Adjust the door fore and aft by repositioning the door as needed.

Installation Procedure

Caution : Refer to Fastener Caution in the Preface section.

1. Install the body side hinges bolts.

   Tighten
   Tighten the bolts to 30 N·m (22 lb ft).

2. Inspect the door for proper operation and alignment.
3. Remove the masking tape.

© Copyright Chevrolet. All rights reserved

Front Side Door Replacement

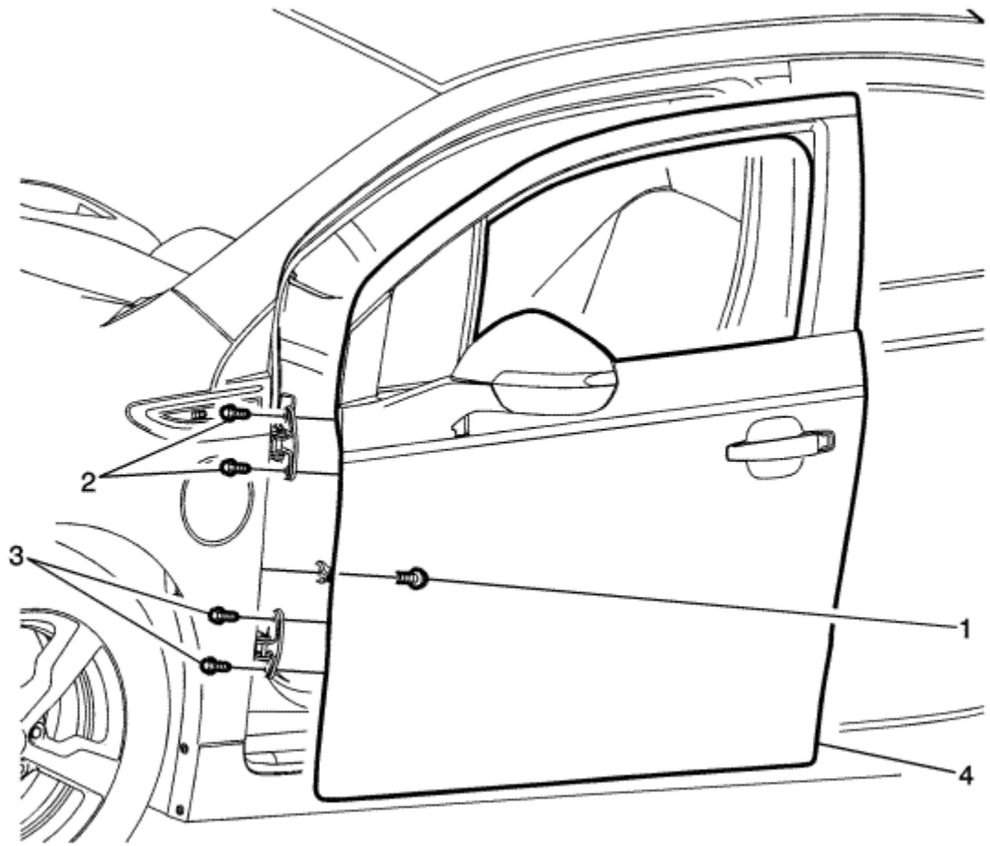

Callout	Component Name
	Front Side Door Check Link Bolt **Caution :** Refer to Fastener Caution in the Preface section. **Procedure**

1	1. Apply masking tape to the wing and door edges. 2. Disconnect the door electrical connector. 3. Support the door before removing the hinge bolts. **Tighten** 22 N·m (16 lb ft)
2	Front Side Door Upper Hinge to Door Bolts (Qty: 2) **Tighten** 30 N·m (22 lb ft)
3	Front Side Door Lower Hinge to Door Bolts (Qty: 2) **Tighten** 30 N·m (22 lb ft)
4	Front Side Door Assembly **Procedure** 1. With the help of an assistant, remove the door. 2. When replacing the door it is necessary to transfer all of the internal components. 3. Inspect the door for proper operation and alignment. Refer to Front Side Door Adjustment .

© Copyright Chevrolet. All rights reserved

Rear Side Door Adjustment

Removal Procedure

Up/Down or In/Out Adjustment

1. Open the door.

   Caution : Refer to Paint Damage Caution in the Preface section.

   Note : The door side upper and lower hinge bolts must remain tight enough to retain door adjusted position.

2. Apply masking tape to the wing and the door edges.

   Loosen the door side hinge bolts.

   Do not remove the bolts from the door.

3. Adjust the door up or down by repositioning the door as needed.
4. Adjust the door in or out by repositioning the door as needed.

Installation Procedure

Caution : Refer to Fastener Caution in the Preface section.

1. Install the door side hinge bolts.

   Tighten
   Tighten the bolts to 30 N·m (22 lb ft).

2. Inspect the door for proper operation and alignment.
3. Remove the masking tape.

Removal Procedure

Fore/Aft Adjustment

Caution : Refer to Paint Damage Caution in the Preface section.

Note : The door side upper and lower hinge bolts must remain tight enough to retain door adjusted position.

1. Apply masking tape to the wing and door edges.

   Loosen the body side hinge bolts.

   Do not remove the bolts from the door.

2. Adjust the door fore and aft by repositioning the door as needed.

Installation Procedure

Caution : Refer to Fastener Caution in the Preface section.

1. Install the body side hinges bolts.

   Tighten
   Tighten the bolts to 30 N·m (22 lb ft).

2. Inspect the door for proper operation and alignment.
3. Remove the masking tape.

© Copyright Chevrolet. All rights reserved

Rear Side Door Replacement

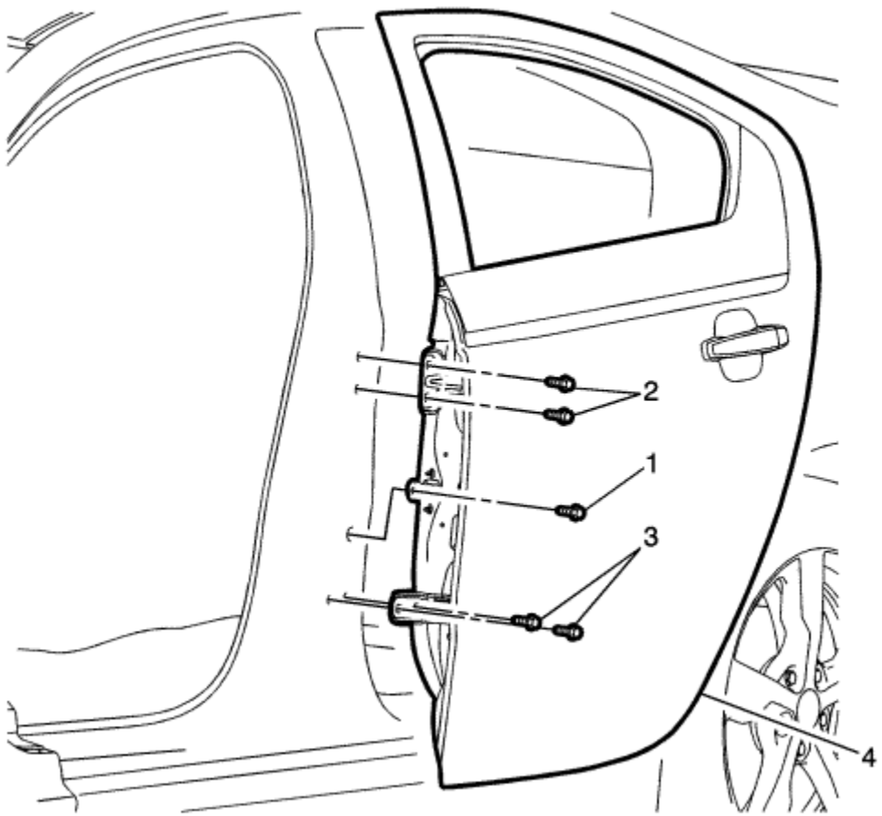

Callout	Component Name
	Rear Side Door Check Link Bolt **Caution :** Refer to Fastener Caution in the Preface section. **Procedure**

1	1. Apply masking tape to the wing and door edges. 2. Disconnect the door electrical connector. 3. Support the door before removing the hinge bolts. **Tighten** 22 N·m (16 lb ft)
2	Rear Side Door Upper Hinge to Door Bolts (Qty: 2) **Tighten** 30 N·m (22 lb ft)
3	Rear Side Door Lower Hinge to Door Bolts (Qty: 2) **Tighten** 30 N·m (22 lb ft)
4	Rear Side Door **Procedure** 1. With the help of an assistant, remove the door. 2. When replacing the door it is necessary to transfer all of the internal components. 3. Inspect the door for proper operation and alignment. Refer to Rear Side Door Adjustment .

© Copyright Chevrolet. All rights reserved

Front Wing Replacement - Left Side

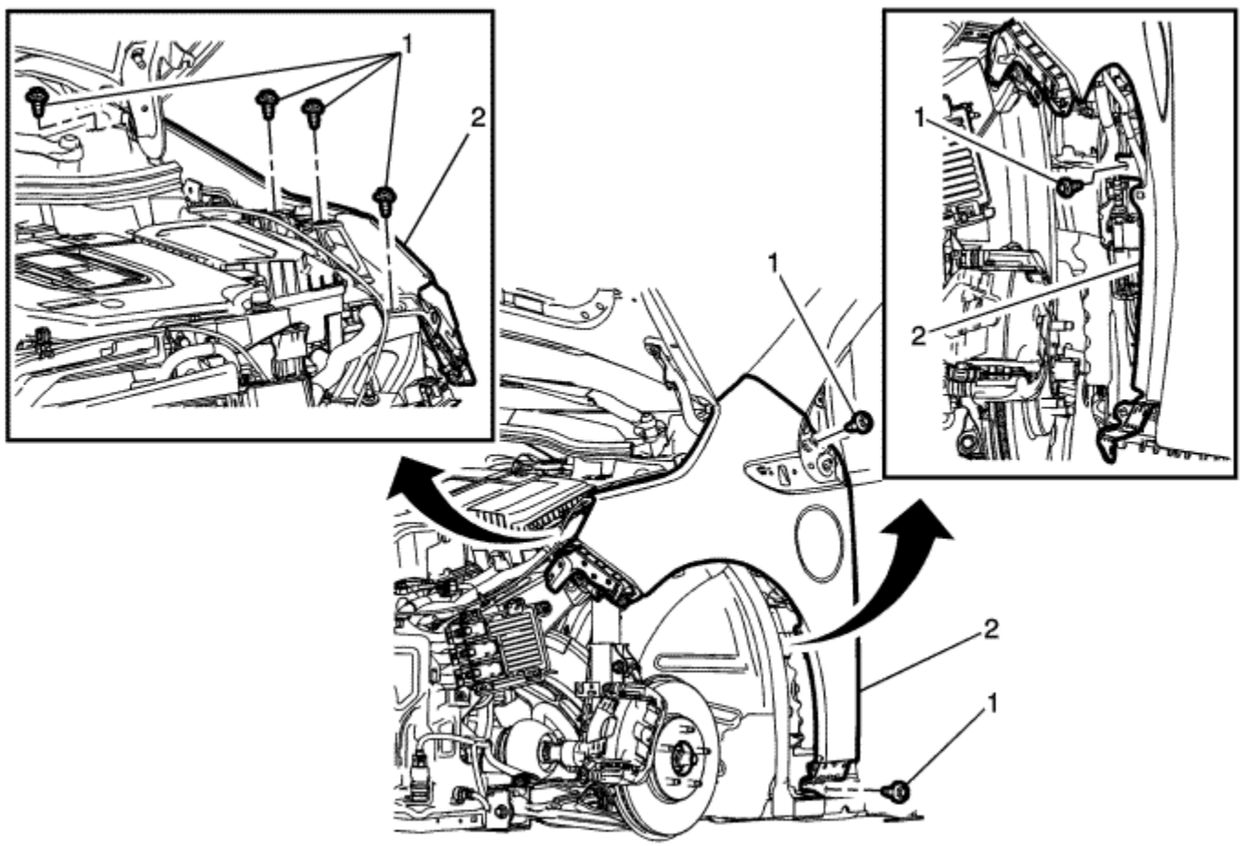

Callout	Component Name

Danger: Always perform the High Voltage Disabling procedure prior to servicing any High Voltage component or connection. Personal Protection Equipment (PPE) and proper procedures must be followed.

The High Voltage Disabling procedure will perform the following tasks:

Identify how to disable high voltage.

-
- Identify how to test for the presence of high voltage.
- Identify condition under which high voltage is always present and personal protection equipment (PPE) and proper procedures must be followed.

Before working on any high voltage system, be sure to wear the following Personal Protection Equipment:

- Safety glasses with appropriate side shields when within 15 meters (50 feet) of the vehicle, either indoors or outdoors.
- Certified and up-to-date Class "0" Insulation gloves rated at 1000V with leather protectors.
  - Visually and functionally inspect the gloves before use.
  - Wear the Insulation gloves with leather protectors at all times when working with the high voltage battery assembly, whether the system is energised or not.

Failure to follow the procedures exactly as written may result in serious injury or death.

Danger: The Volt Battery Pack will utilise an exchange program. Please consult the most recent revision of bulletin/PI #PIP4841, available in Service Information (SI), for a list of approved Volt Battery Pack service procedures. Components that may be removed and serviced without exchanging the complete battery pack are identified in the bulletin/PI. Please contact the GM Technical Assistance Centre (1-877-446-8227) if you have any questions.

Preliminary Procedures

1. Remove the front fascia. Refer to Front Bumper Fascia Removal and Installation : Volt → Ampera .
2. Remove the air inlet extension. Refer to Air Inlet Grille Panel Extension Replacement .
3. Remove the front wing upper rear moulding. Refer to Front Fender Upper Rear Moulding Replacement .
4. Remove the front compartment side sight shield. Refer to Front Compartment Side Sight Shield Replacement : Volt → Ampera .
5. Remove the front wheelhouse front liner. Refer to Front Wheelhouse Front Liner Replacement .
6. Remove the front wheelhouse rear liner. Refer to Front Wheelhouse Rear Liner Replacement .
7. Remove the sill panel moulding. Refer to Sill Panel Moulding Replacement .
8. Remove the left headlamp. Refer to Headlamp Replacement : Volt → Ampera .
9. Disconnect all electrical connectors to remove the wing.

1	Left Wing Bolt (Qty: 7) **Caution :** Refer to Fastener Caution in the Preface section. **Tighten** 9 N·m (80 lb in)
2	Front Wing **Procedure** 1. Remove the wing slowly to ensure all electrical connectors are disconnected. 2. Remove the charge port housing, if required. Refer to Charge Port Housing Replacement . 3. Transfer additional parts as required.

&#169© Copyright Chevrolet. All rights reserved

Front Wing Replacement - Right Side

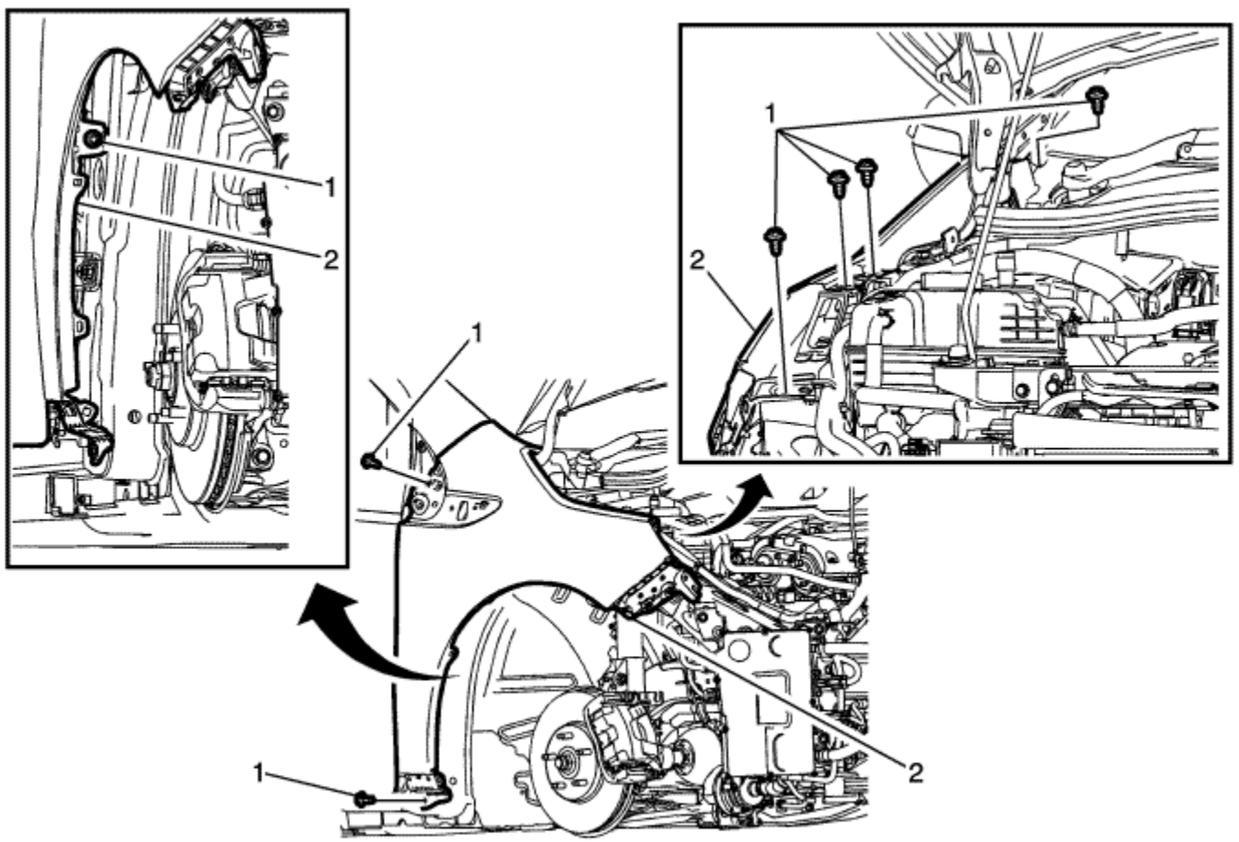

Callout	Component Name
Preliminary Procedures	

1. Remove the front fascia. Refer to Front Bumper Fascia Removal and Installation : Volt → Ampera .
2. Remove the air inlet extension. Refer to Air Inlet Grille Panel Extension Replacement .
3. Remove the front wing upper rear moulding. Refer to Front Fender Upper Rear Moulding Replacement .

4. Remove the front compartment side sight shield. Refer to Front Compartment Side Sight Shield Replacement : Volt → Ampera .
5. Remove the front wheelhouse front liner. Refer to Front Wheelhouse Front Liner Replacement .
6. Remove the front wheelhouse rear liner. Refer to Front Wheelhouse Rear Liner Replacement .
7. Remove the sill panel moulding. Refer to Sill Panel Moulding Replacement .
8. Remove the right headlamp. Refer to Headlamp Replacement : Volt → Ampera .

1	Right Wing Bolt (Qty: 7) **Caution :** Refer to Fastener Caution in the Preface section. **Tighten** 9 N·m (80 lb in)
2	Front Wing **Procedure** Transfer parts as needed.

© Copyright Chevrolet. All rights reserved

Liftgate Adjustment

1. Lower the rear headliner area to access the hinge bolts.
2. Loosen the striker.
3. Loosen the hinge-to-roof panel bolts for forward or rearward adjustments.
4. Move the tailgate within the tailgate opening to achieve the best alignment and operation.
5. Adjust the striker to achieve the best operation and alignment of the tailgate.
6. Inspect the seals for proper engagement.

   Caution : Refer to Fastener Caution in the Preface section.

7. Tighten the bolts when the proper adjustment is achieved. Tighten the liftgate hinge and striker bolts to **25 N·m (18 lb ft)**.

© Copyright Chevrolet. All rights reserved

Liftgate Replacement

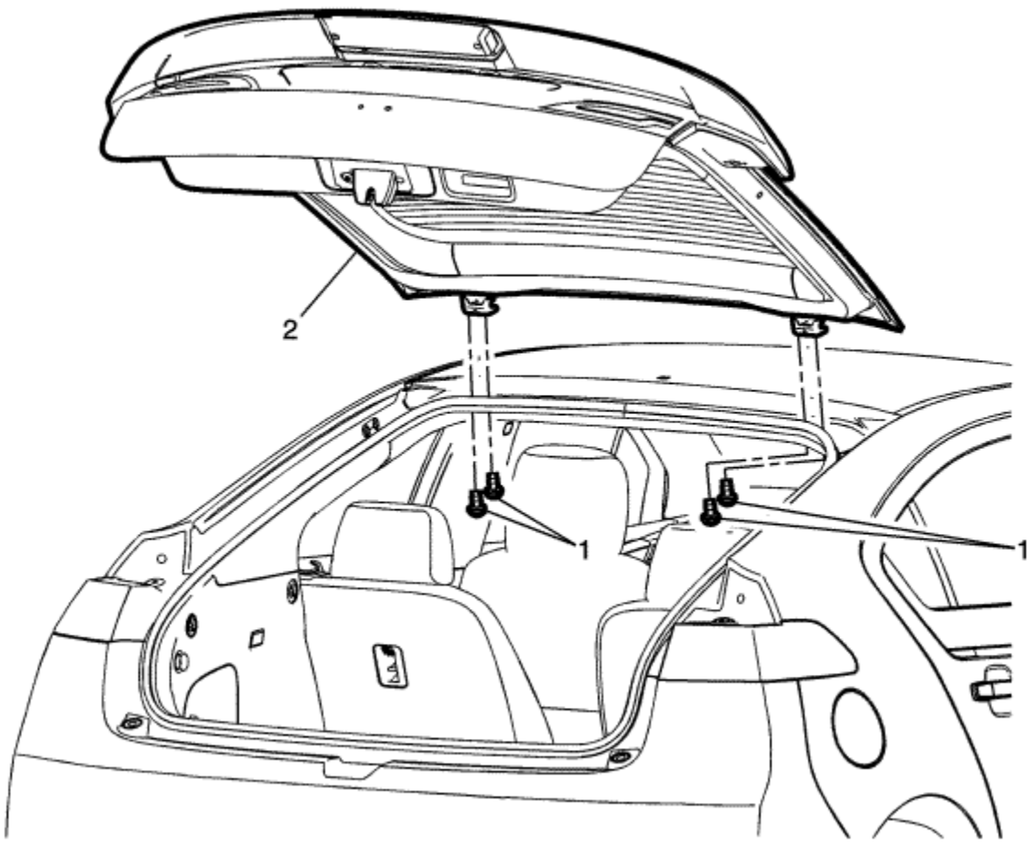

Callout	Component Name
Preliminary Procedures	

1. Use a grease pencil to mark the liftgate hinge position.
2. Lower the rear of the headliner enough to access the hinge bolts. Refer to Headlining Trim Panel Replacement .
3. Disconnect the electrical connectors.

4. Disconnect the liftgate struts. Refer to Liftgate Strut Replacement .

1	Tailgate Hinge Bolt (Qty: 4) **Caution :** Refer to Fastener Caution in the Preface section. **Tighten** 25 N·m (18 lb ft)
2	Liftgate **Procedure** 1. Transfer parts as needed. 2. Adjust the tailgate if needed. Refer to Liftgate Adjustment .

© Copyright Chevrolet. All rights reserved

Front Side Door Upper Hinge and Lower Hinge Replacement

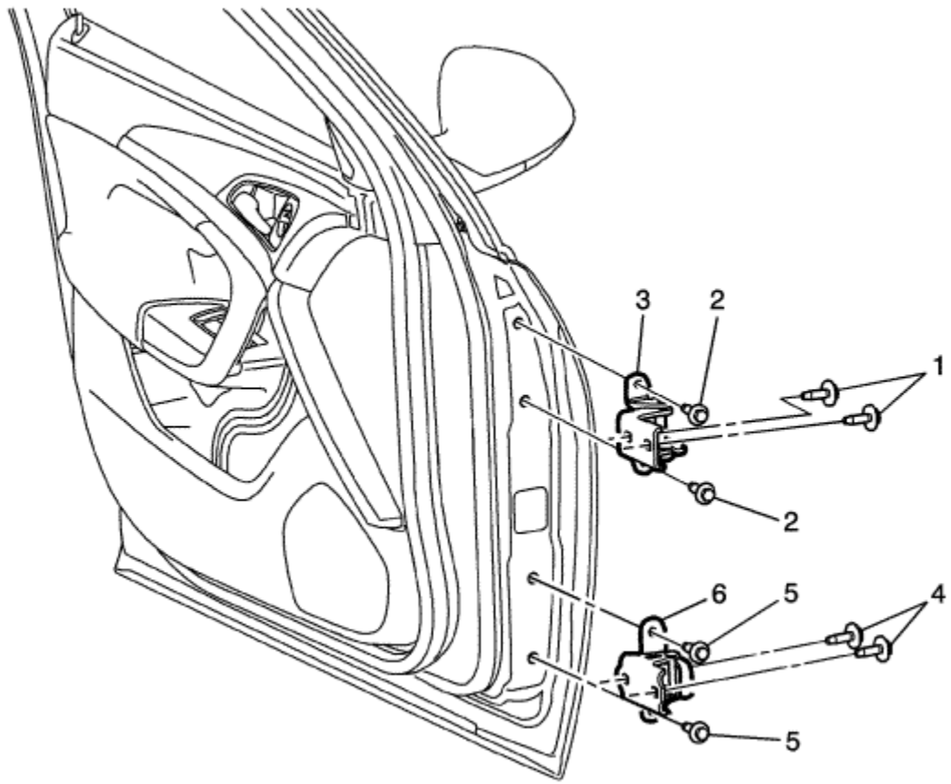

Callout	Component Name
Preliminary Procedures	

1. If replacing the driver side door hinges only, disable the high voltage system. Refer to High Voltage Disabling .
2. Remove the battery charger receptacle. Refer to Drive Motor Battery Charger Receptacle Replacement .
3. Remove the charger port door actuator. Refer to Charge Port Housing Replacement .

4. Remove the front side door. Refer to Front Side Door Replacement .

1	Front Side Door Upper Hinge to Body Bolts (Qty: 2) **Caution :** Refer to Fastener Caution in the Preface section. **Tighten** 30 N·m (22 lb ft)
2	Front Side Door Upper Hinge to Door Bolts (Qty: 2) **Tighten** 30 N·m (22 lb ft)
3	Front Side Door Upper Hinge
4	Front Side Door Lower Hinge to Body Bolts (Qty: 2) **Procedure** Front side door check link bolt. Refer to upper front hinge removal. **Tighten** 30 N·m (22 lb ft)
5	Front Side Door Lower Hinge to Door Bolts (Qty: 2) **Tighten** 30 N·m (22 lb ft)
6	Front Side Door Lower Hinge **Procedure** Inspect the door for proper operation and alignment. Refer to Front Side Door Adjustment .

© Copyright Chevrolet. All rights reserved

Bonnet Hinge Replacement - Volt

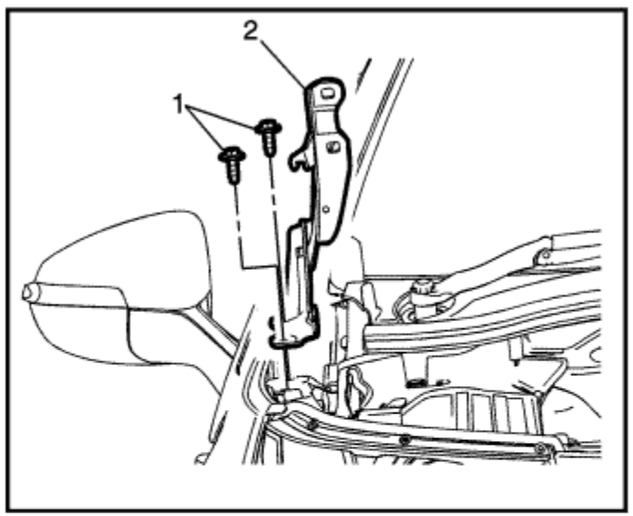

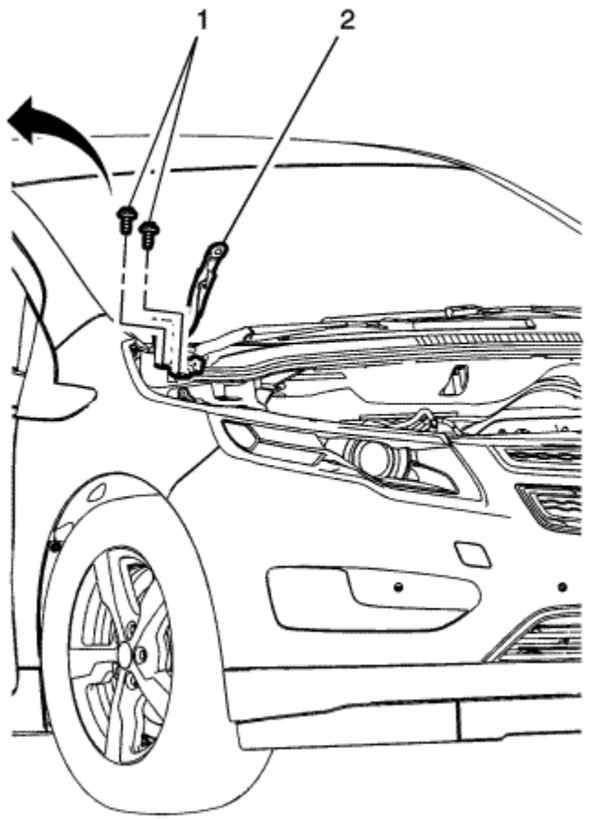

Callout	Component Name
Preliminary Procedures 1. Remove the bonnet. Refer to Bonnet Replacement : Volt → Ampera . 2. Remove the front compartment side sight shield. Refer to Front Compartment Side Sight Shield Replacement : Volt → Ampera .	

1	Bonnet Hinge Bolt (Qty: 2) **Caution :** Refer to Fastener Caution in the Preface section. **Tighten** 25 N·m (18 lb ft)
2	Bonnet Hinge **Procedure** Adjust the bonnet and hinge if needed.

© Copyright Chevrolet. All rights reserved

Tailgate Hinge Replacement

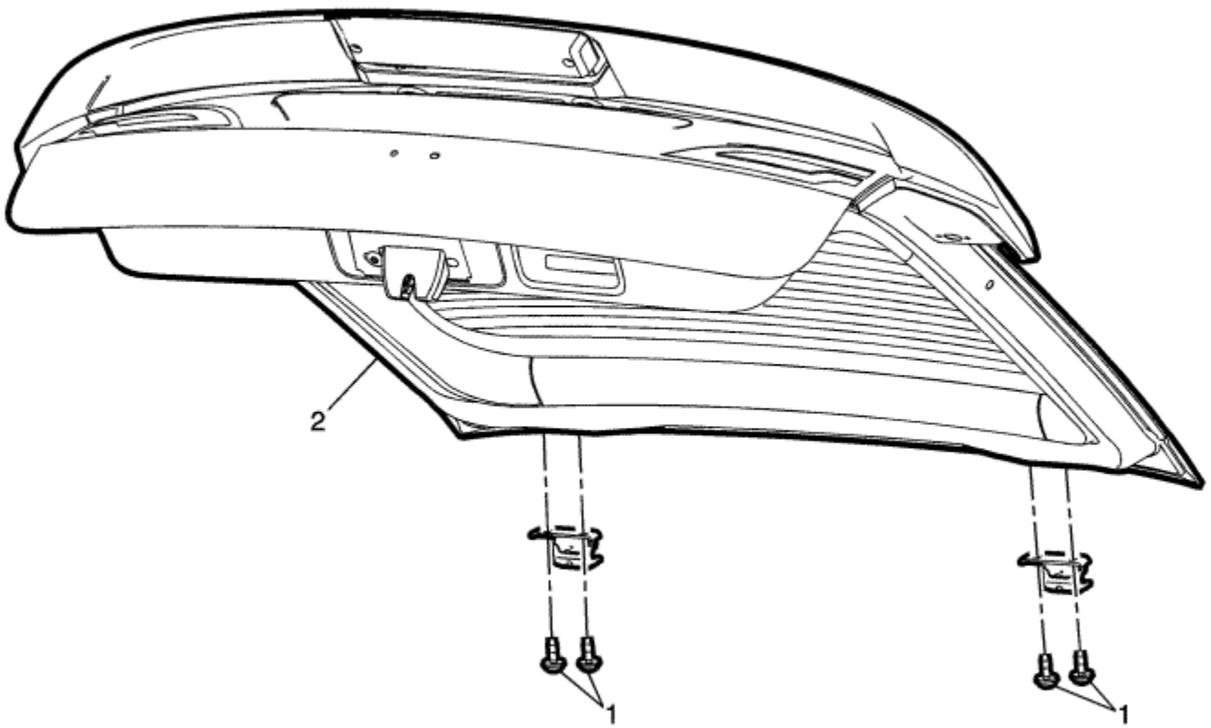

Callout	Component Name
Preliminary Procedures 1. Remove the liftgate. Refer to Liftgate Replacement . 2. Use a grease pencil to mark the tailgate hinge position to the body prior to removal.	

1	Tailgate Hinge Bolt (Qty: 2) **Caution :** Refer to Fastener Caution in the Preface section. **Tighten** 25 N·m (18 lb ft)
2	Liftgate Hinge **Procedure** Adjust the tailgate if needed. Refer to Liftgate Adjustment .

© Copyright Chevrolet. All rights reserved

Rear Side Door Upper Hinge and Lower Hinge Replacement

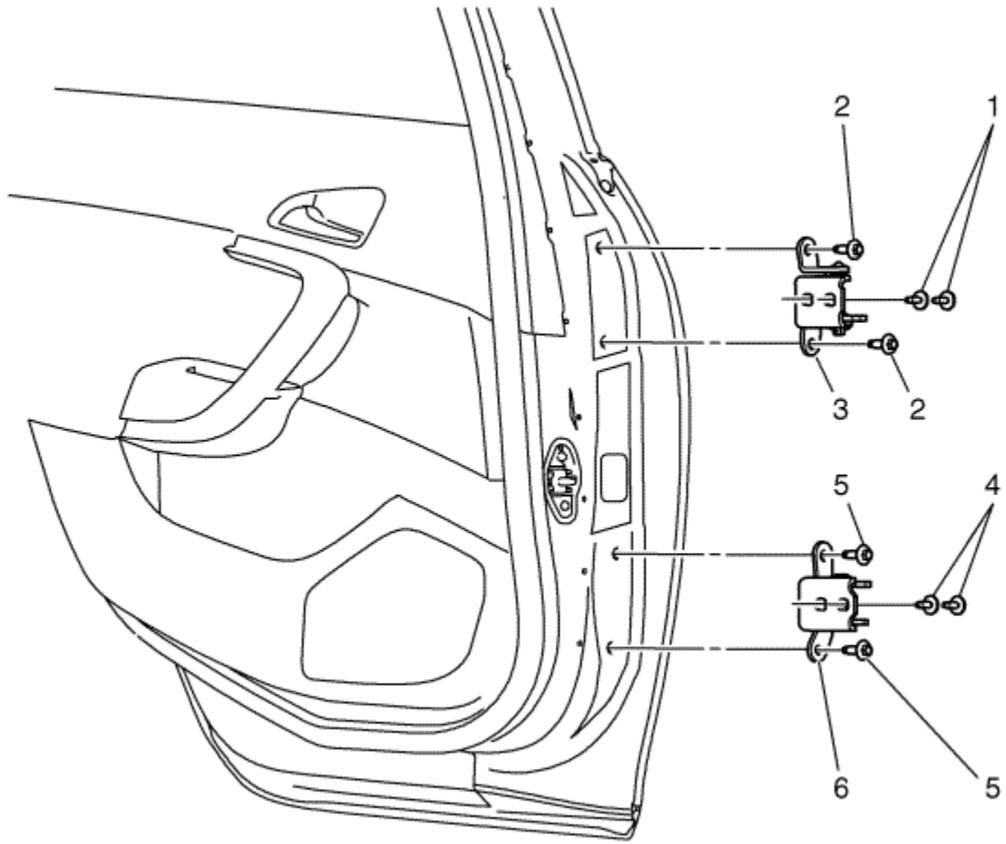

Callout	Component Name
Preliminary Procedure Remove the rear side door. Refer to Rear Side Door Replacement .	
	Rear Side Door Upper Hinge to Body Bolts (Qty: 2)

1	**Caution :** Refer to Fastener Caution in the Preface section. **Tighten:** 30 N·m (22 lb ft). **Tip** Open the front door to access the rear door hinge bolts, keeping the rear door closed.
2	Rear Side Door Upper Hinge to Door Bolts (Upper) (Qty: 2) **Tighten** 30 N·m (22 lb ft).
3	Rear Side Door Upper Hinge
4	Rear Side Door Lower Hinge to Body Bolts (Qty: 2) **Tighten** 30 N·m (22 lb ft).
5	Rear Side Door Lower Hinge to Door Bolts (Qty: 2) **Tighten** 30 N·m (22 lb ft).
6	Rear Side Door Lower Hinge **Procedure** Inspect the door for proper operation and alignment. Refer to Rear Side Door Adjustment .

© Copyright Chevrolet. All rights reserved

Bonnet Adjustment

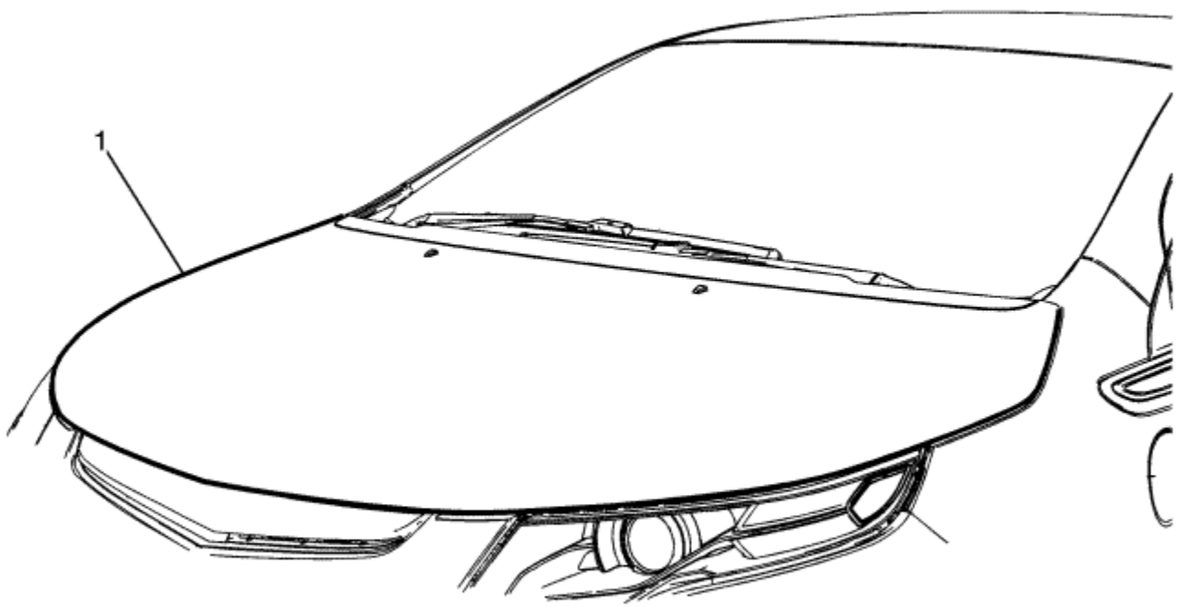

Callout	Component Name
	Bonnet **Caution :** Refer to Fastener Caution in the Preface section. **Procedure**

1	1. Loosen the 4 bonnet hinge nuts. 2. Adjust the bonnet in order to obtain an even gap on both sides between the bonnet and the wings, the headlamps and the front bumper fascia and so that the bonnet is flush with both wings on the front edge, the front bumper fascia and the headlamps. **Adjustment:** • Bonnet to front wing (a) 3.0 mm ± 0.75 mm (0.12 in ± 0.03 in) • Bonnet to front wing (b) 3.0 mm ± 0.75 mm (0.12 in ± 0.04 in) • Bonnet to headlamp (c) 6.0 mm ± 1.5 mm (0.25 in ± 0.03 in) **Tighten** 25 N·m (18 lb ft)

&#169© Copyright Chevrolet. All rights reserved

Bonnet Replacement - Volt

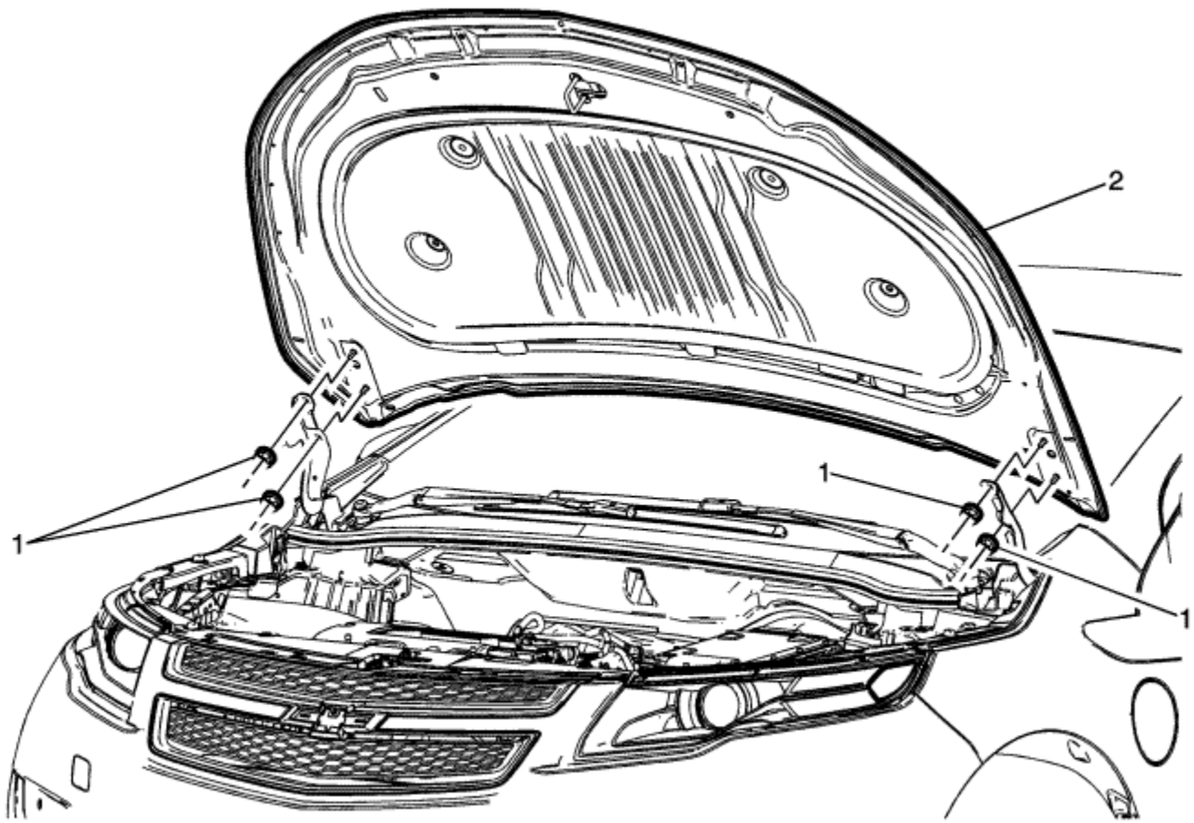

Callout	Component Name
1	Bonnet Hinge Nut (Qty: 4) **Caution :** Refer to Fastener Caution in the Preface section. **Procedure**

	Mark the location of the hinge to the bonnet with a grease pencil to help with alignment. **Tighten** 25 N·m (18 lb ft)
2	Bonnet **Procedure** 1. Disconnect the wiper washer hoses from the bonnet. 2. Transfer parts as needed. 3. Adjust the bonnet if needed.

© Copyright Chevrolet. All rights reserved

Bonnet Insulator Replacement - Volt

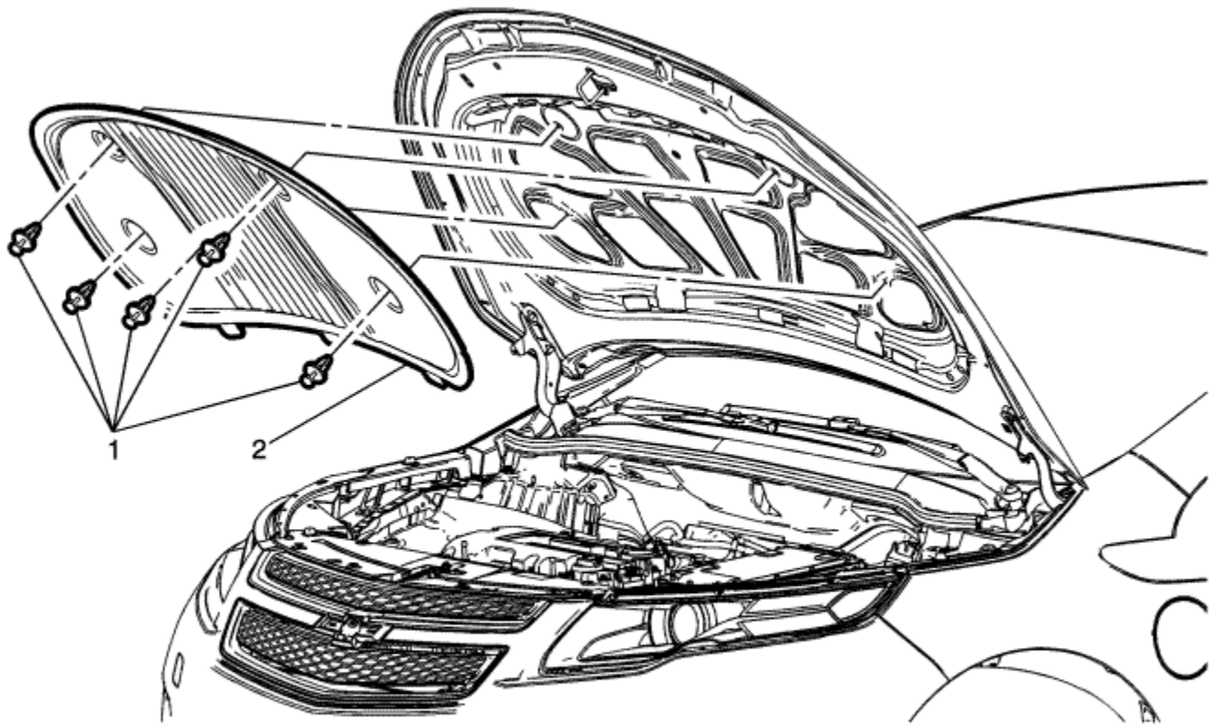

Callout	Component Name
1	Hood Insulator Plastic Retainer (Qty: 5)
2	Bonnet Insulator **Procedure**

	Ensure the 3 integral tabs are secured to the bonnet.

© Copyright Chevrolet. All rights reserved

Bonnet Primary and Secondary Catch Replacement - Volt

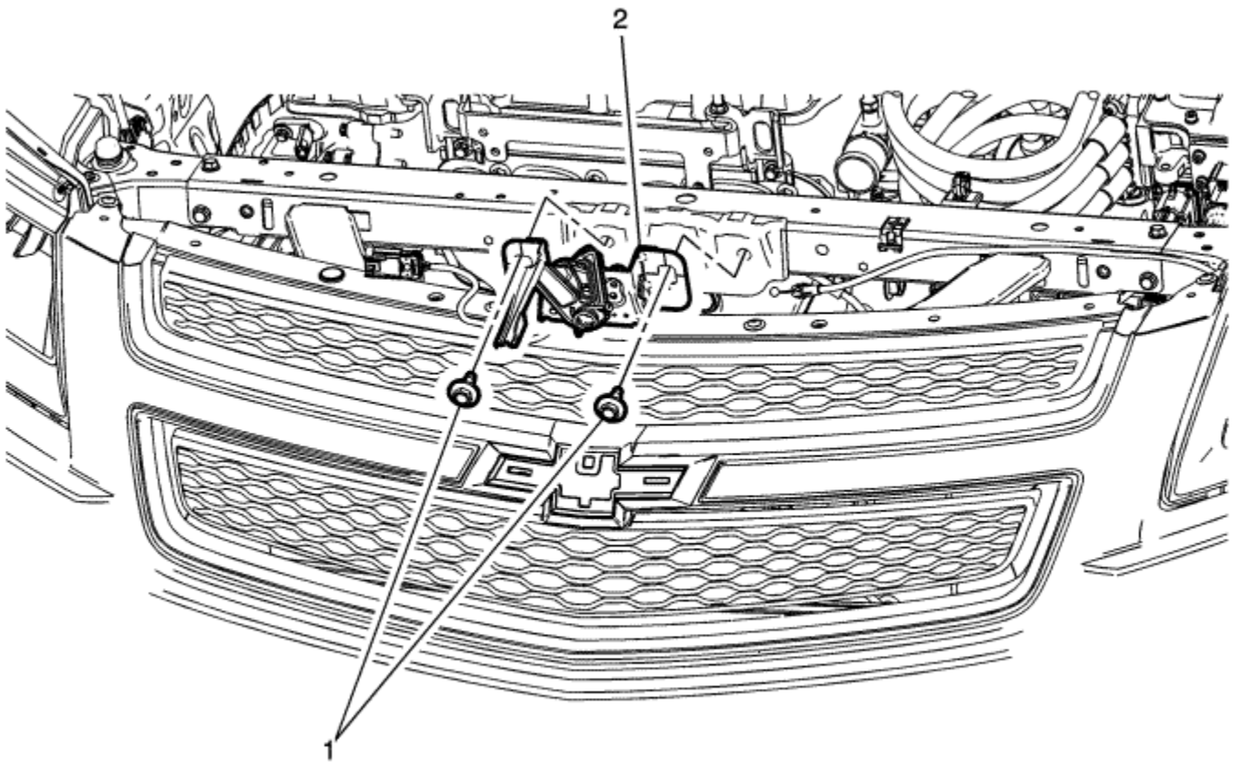

Callout	Component Name
Preliminary Procedure Remove the front compartment front sight shield. Refer to Front Compartment Front Sight Shield Replacement : Volt → Ampera .	
	Bonnet Primary and Secondary Latch Bolt (Qty: 2)

1	**Caution :** Refer to Fastener Caution in the Preface section. **Tighten** 25 N·m (18 lb ft)
2	Bonnet Primary and Secondary Catch **Procedure** Disconnect the bonnet release cable and the electrical connector.

© Copyright Chevrolet. All rights reserved

Front Side Door Check Link Replacement

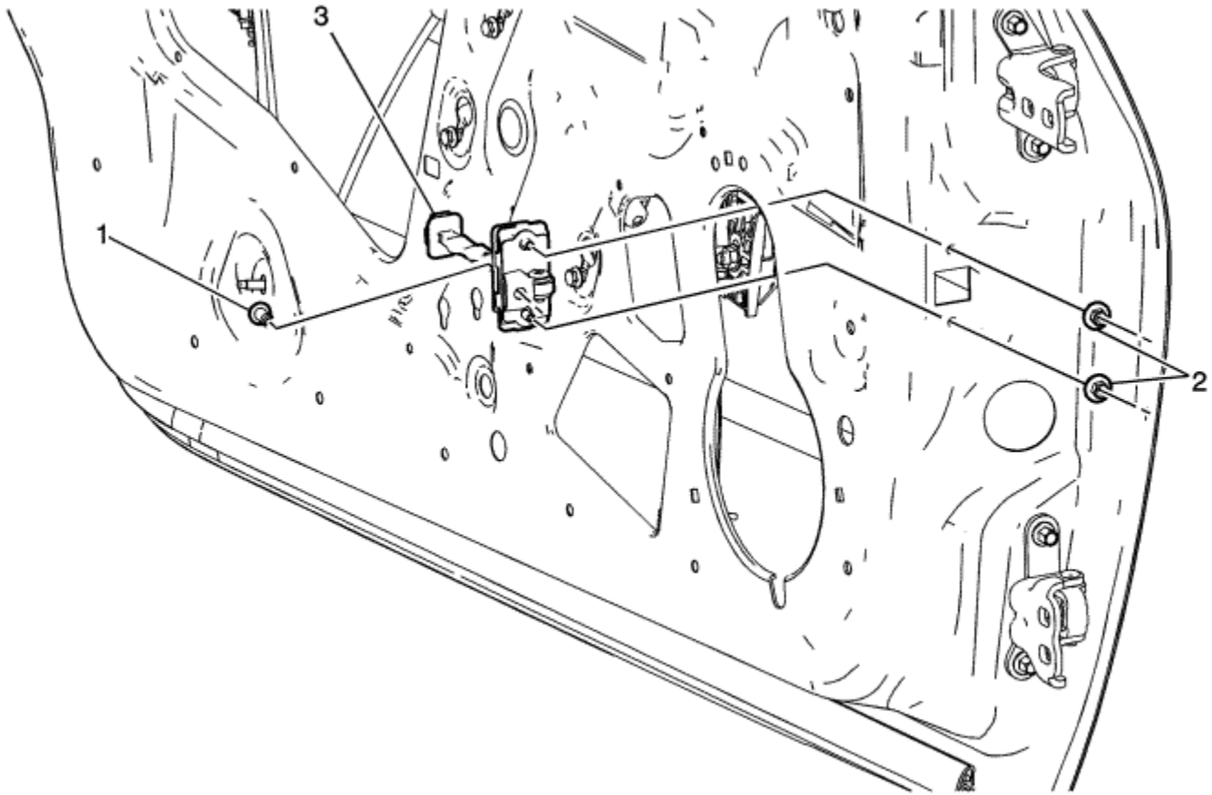

Callout	Component Name
Preliminary Procedure Remove the front side door trim panel. Refer to Front Side Door Trim Replacement .	
	Front Side Door Check Link Bolt to Body

1	**Caution :** Refer to Fastener Caution in the Preface section. **Tighten** 22 N·m (16 lb ft)
2	Front Side Door Check Link Nut to Door (Qty: 2) **Procedure** 1. Place the door in the full open position. 2. Place the window in the full up position. 3. Remove the front door speaker. Refer to Radio Front Side Door Speaker Replacement . **Tighten** 10 N·m (89 lb in)
3	Front Side Door Check Link

© Copyright Chevrolet. All rights reserved

Rear Side Door Check Link Replacement

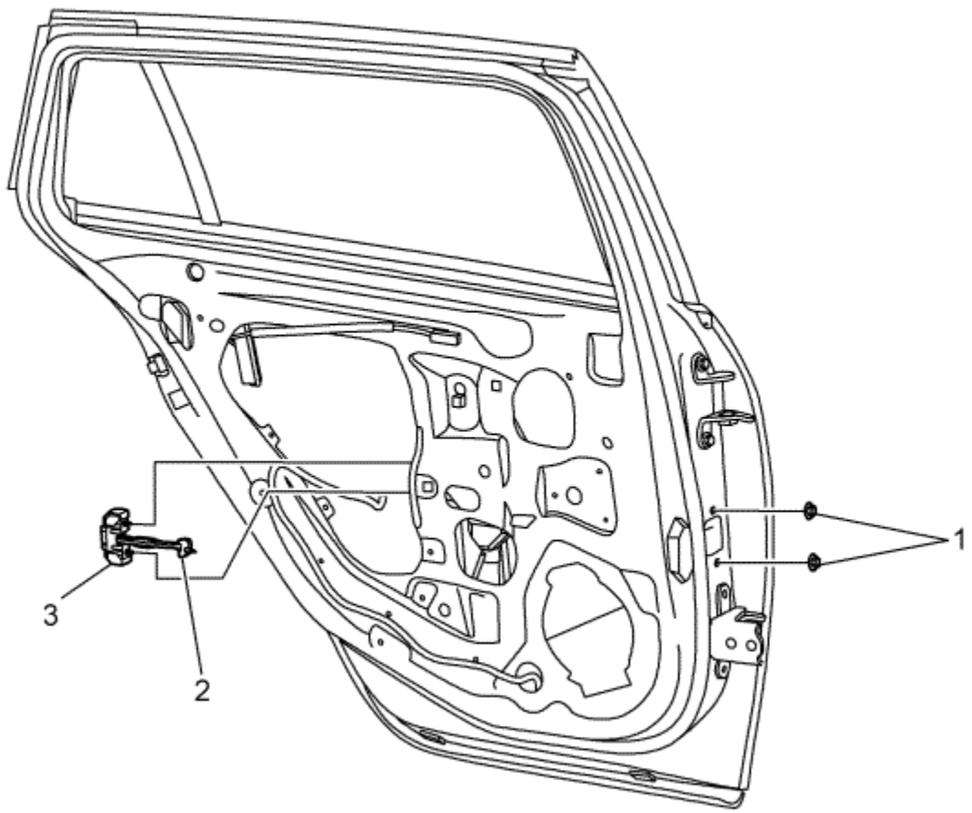

Callout	Component Name
Preliminary Procedure Remove the rear side door trim panel. Refer to Rear Side Door Trim Replacement .	
	Rear Side Door Check Link Bolt to Body

1	**Caution :** Refer to Fastener Caution in the Preface section. **Tighten** 22 N·m (16 lb ft)
2	Rear Side Door Check Link Nut to Door (Qty: 2) **Procedure** 1. Place the door in the full open position. 2. Place the window in the full up position. 3. Remove the rear door speaker. Refer to Radio Rear Side Door Speaker Replacement . **Tighten** 10 N·m (89 lb in)
3	Rear Side Door Check Link

© Copyright Chevrolet. All rights reserved

Fuel Tank Filler Door Replacement

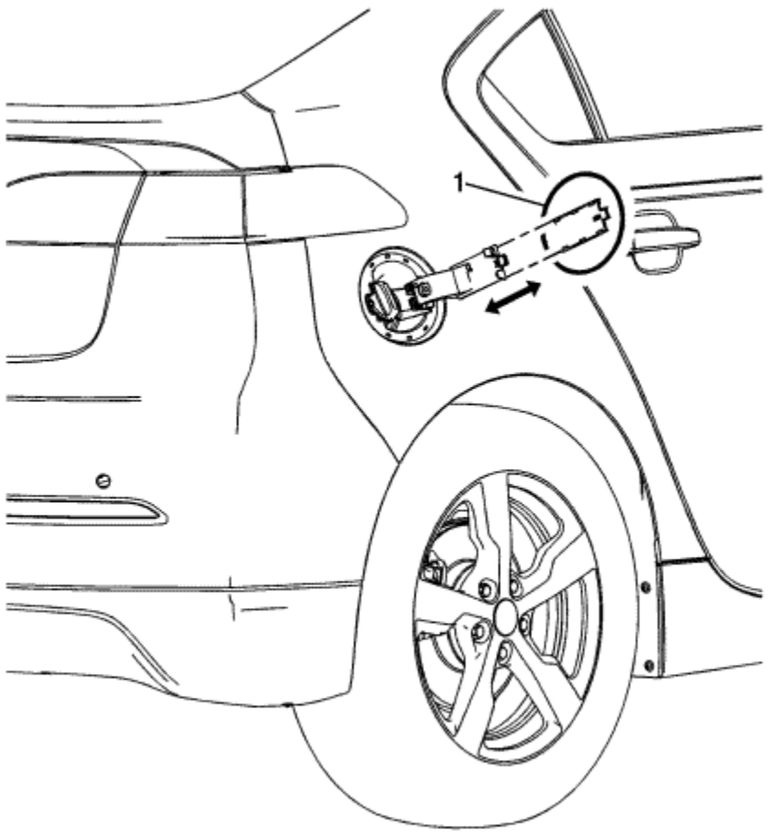

Callout	Component Name
1	Fuel Tank Filler Door **Procedure** Position the fuel tank filler door to the full open position. Using light outward sliding pressure on the filler door, release the retainer on the fuel tank filler door from the

	hinge.

© Copyright Chevrolet. All rights reserved

Fuel Tank Filler Pipe Housing Replacement

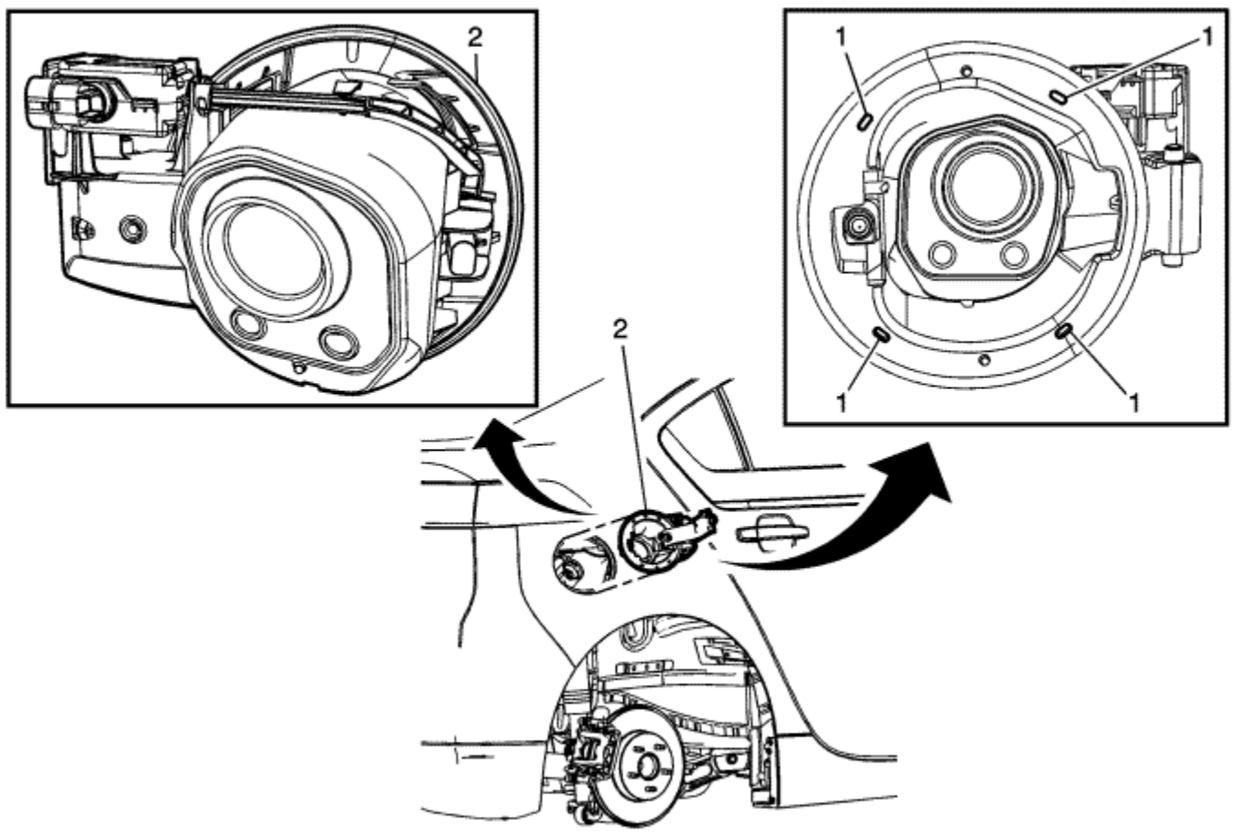

Callout	Component Name
Preliminary Procedures 1. Remove the fuel tank filler door. Refer to Fuel Tank Filler Door Replacement . 2. Loosen the lower filler pipe bolt and remove the upper filler pipe bolt. Refer to Fuel Tank Filler Pipe Replacement .	

1	Fuel Tank Filler Pipe Housing Retainer (Qty: 4) **Procedure** Using a flat-bladed tool, release the fuel tank filler pipe housing retainers through the wheelhouse opening.
2	Fuel Tank Filler Pipe Housing **Procedure** 1. Disconnect the electrical connector. 2. Ensure that the fuel filler door locking rod is in the lock position while removing the housing.

© Copyright Chevrolet. All rights reserved

Bonnet Hold-Open Rod Replacement

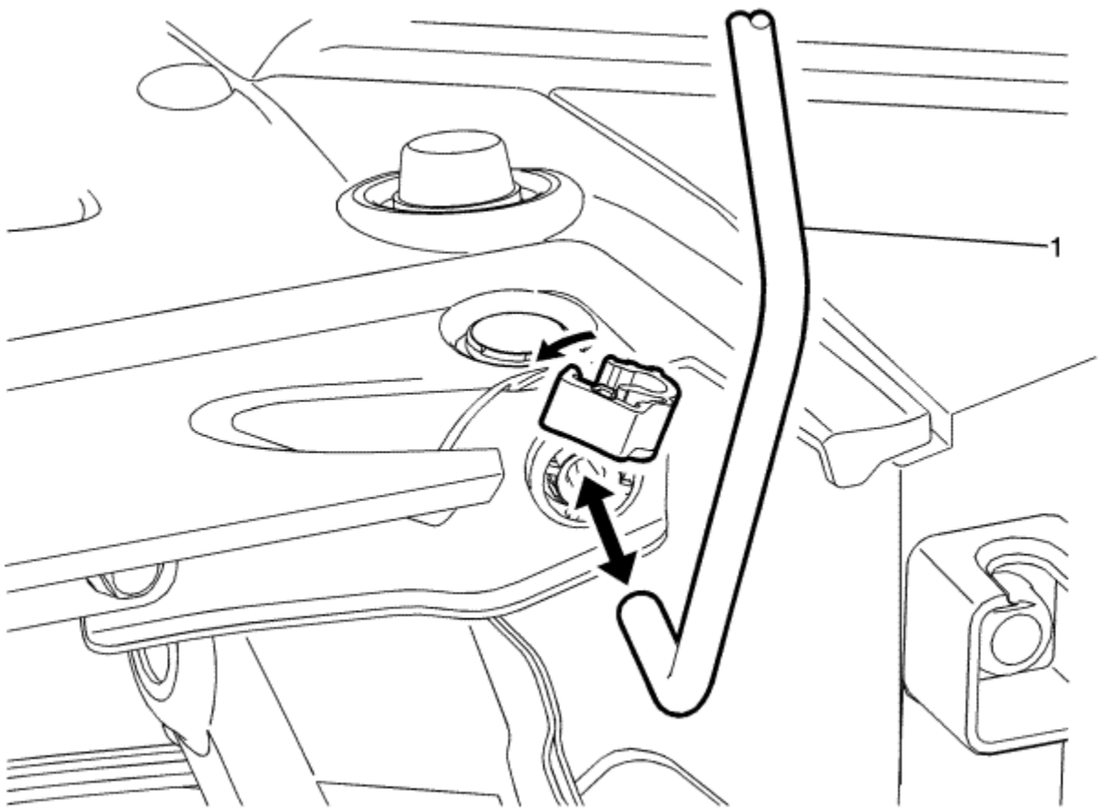

Callout	Component Name
1	Bonnet Hold-Open Rod **Warning :** When a bonnet hold open device is being removed or installed, provide alternate support to avoid the possibility of damage to the vehicle or personal injury.

	Procedure Open the retainer and remove the bonnet hold-open rod.

© Copyright Chevrolet. All rights reserved

Bonnet Front Weatherstrip Replacement - Volt

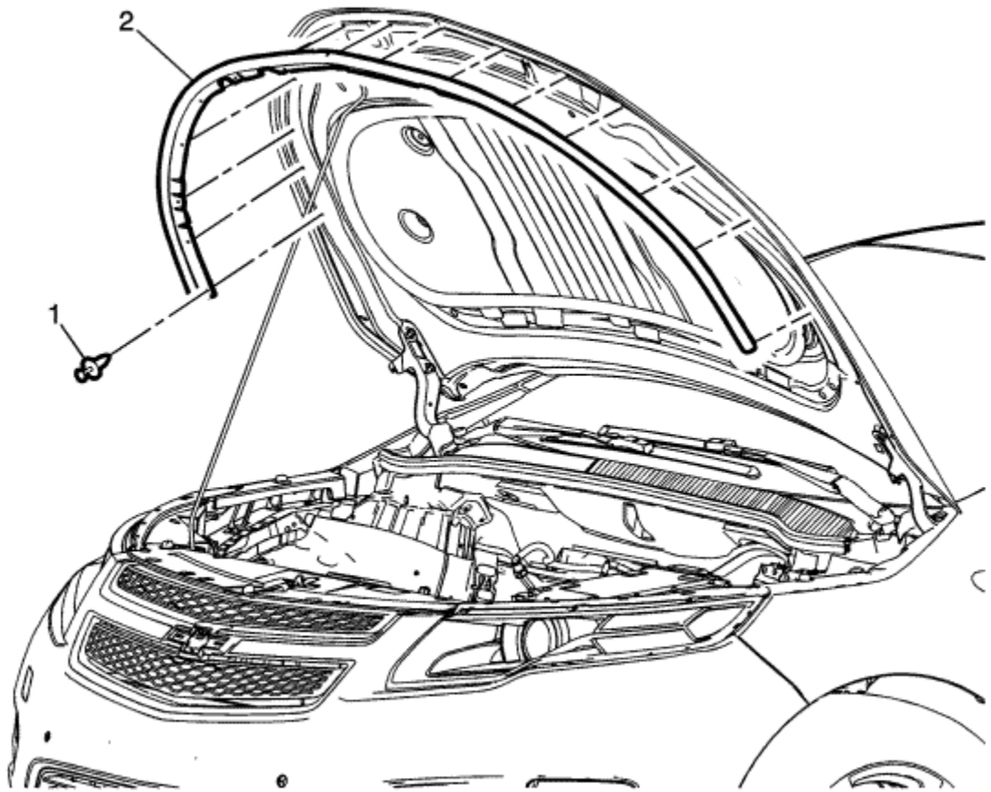

Callout	Component Name
1	Bonnet Front Weatherstrip Push-In Retainer (Qty: 15)
2	Bonnet Front Weatherstrip

© Copyright Chevrolet. All rights reserved

Bonnet Rear Weatherstrip Replacement - Volt

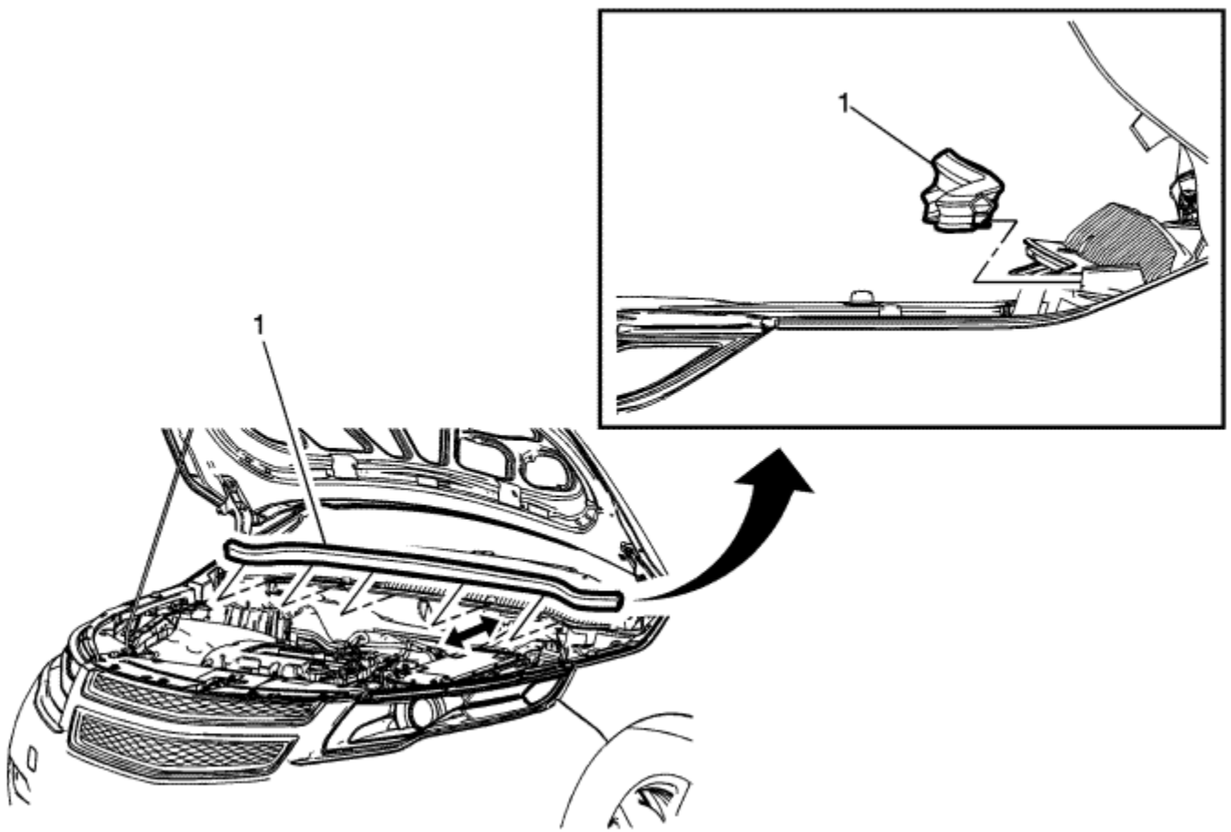

Callout	Component Name
1	Bonnet Rear Weatherstrip **Procedure** Clean the area where the weatherstrip will be mounted. Use a suitable solvent with a mixture of 50 percent isopropyl alcohol and 50 percent water by volume, or high

	flash naphtha.

© Copyright Chevrolet. All rights reserved

Front Compartment Front Sight Shield Replacement - Volt

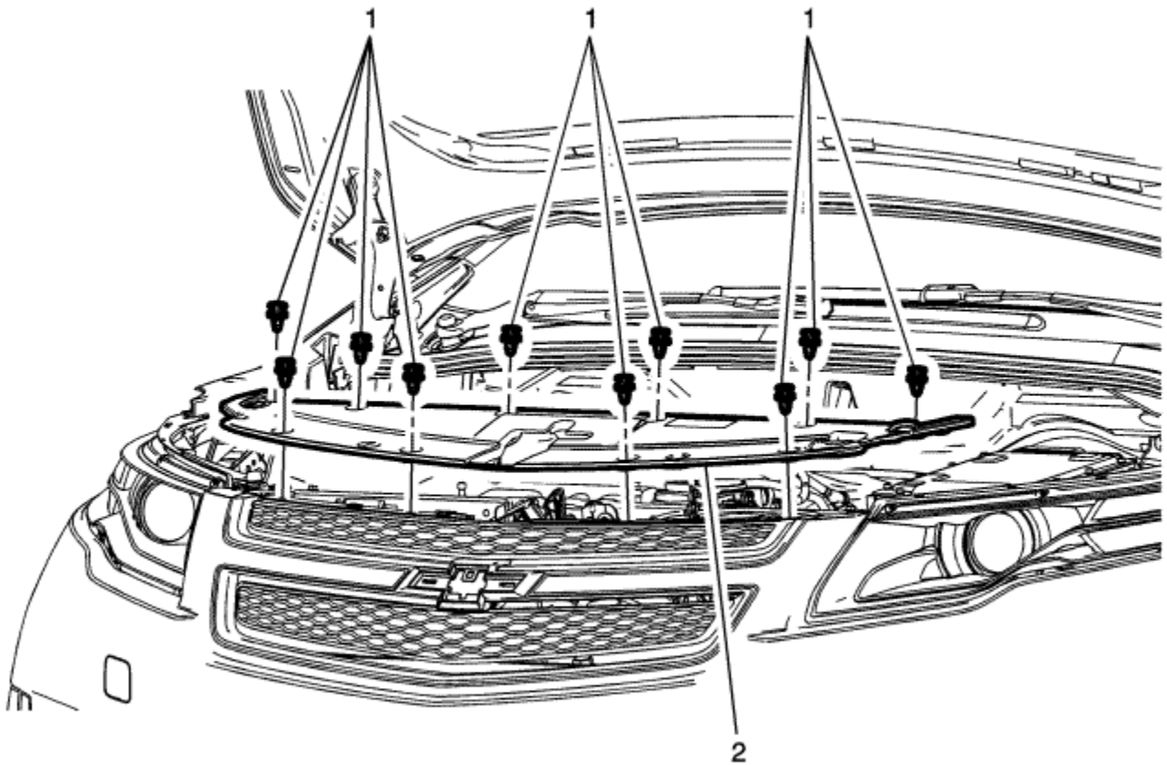

Callout	Component Name
1	Front Compartment Front Sight Shield Plastic Retainer (Qty: 10)
2	Front Compartment Front Sight Shield

© Copyright Chevrolet. All rights reserved

Front Compartment Side Sight Shield Replacement - Volt

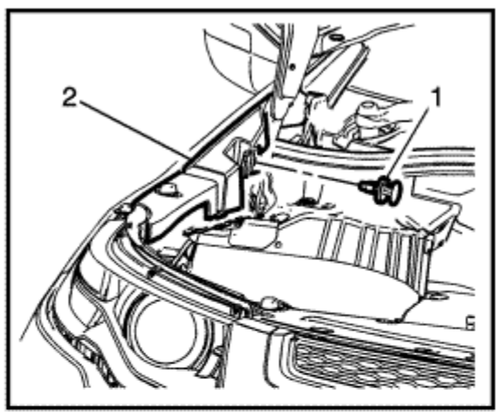

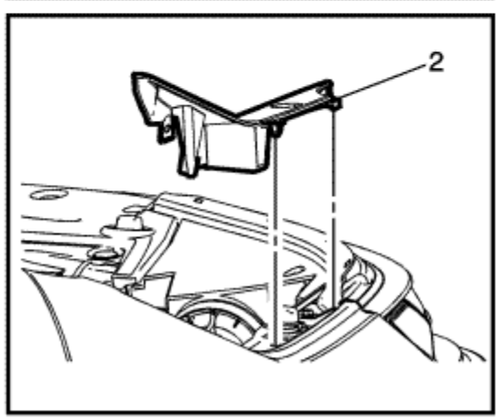

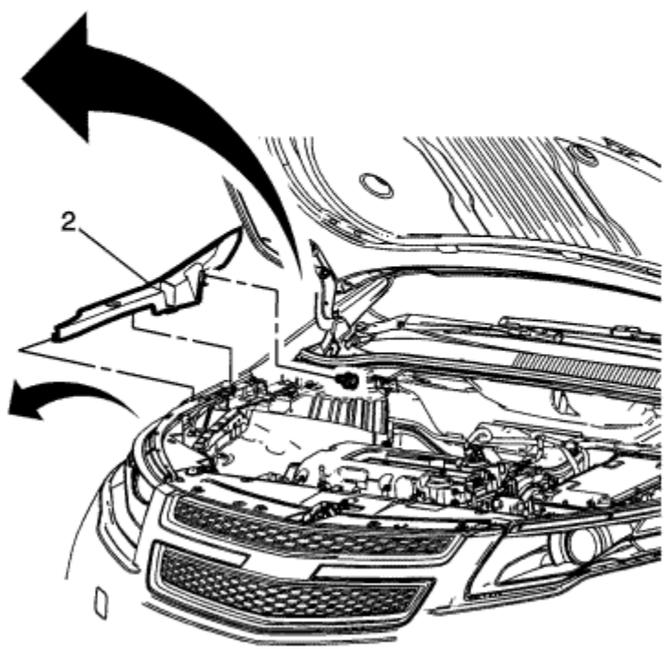

Callout	Component Name
1	Front Compartment Side Sight Shield Push-In Retainer
2	Front Compartment Side Sight Shield **Procedure**

	1. Reposition the bonnet rear bonnet weatherstrip. 2. Release the retainer on the bottom of the sight shield. 3. Slide the sight shield rearward and upward to remove the front compartment side sight shield.

© Copyright Chevrolet. All rights reserved

Liftgate Strut Replacement

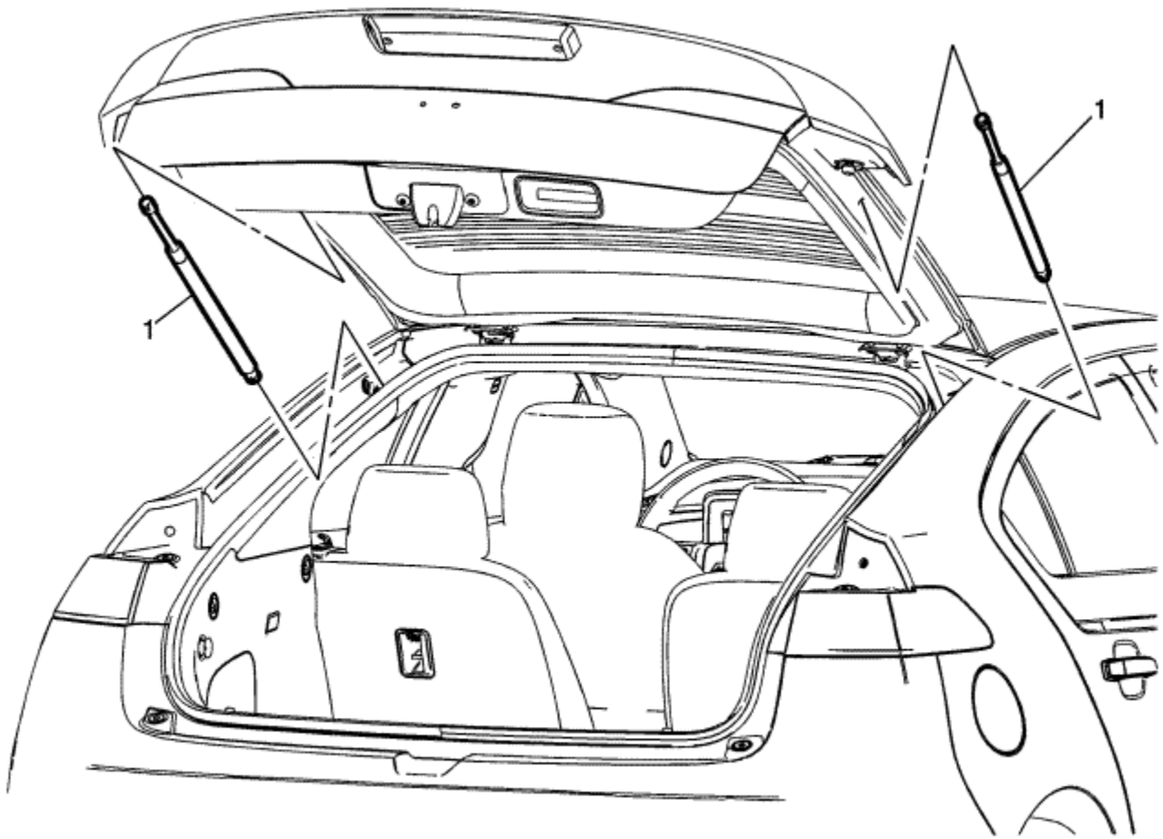

Callout	Component Name
	Liftgate Strut **Warning :** When a tailgate hold open device is being removed or installed, provide alternate support to avoid the possibility of damage to the vehicle or personal injury. **Caution:** Apply pressure only at the end of the liftgate/bonnet assist rod that you are removing or attaching. Do NOT apply pressure to the middle of the rod because

1	damage or bending will result. **Procedure** 1. Release the locking tabs on the strut. 2. Ensure that the clip is fully seated when the strut is reinstalled. If the clip cannot be fully seated, a new strut should be installed. 3. Ensure that the arrow on the strut is pointing toward the roof structure.

© Copyright Chevrolet. All rights reserved

Front or Rear Side Door Lower Weatherstrip Replacement

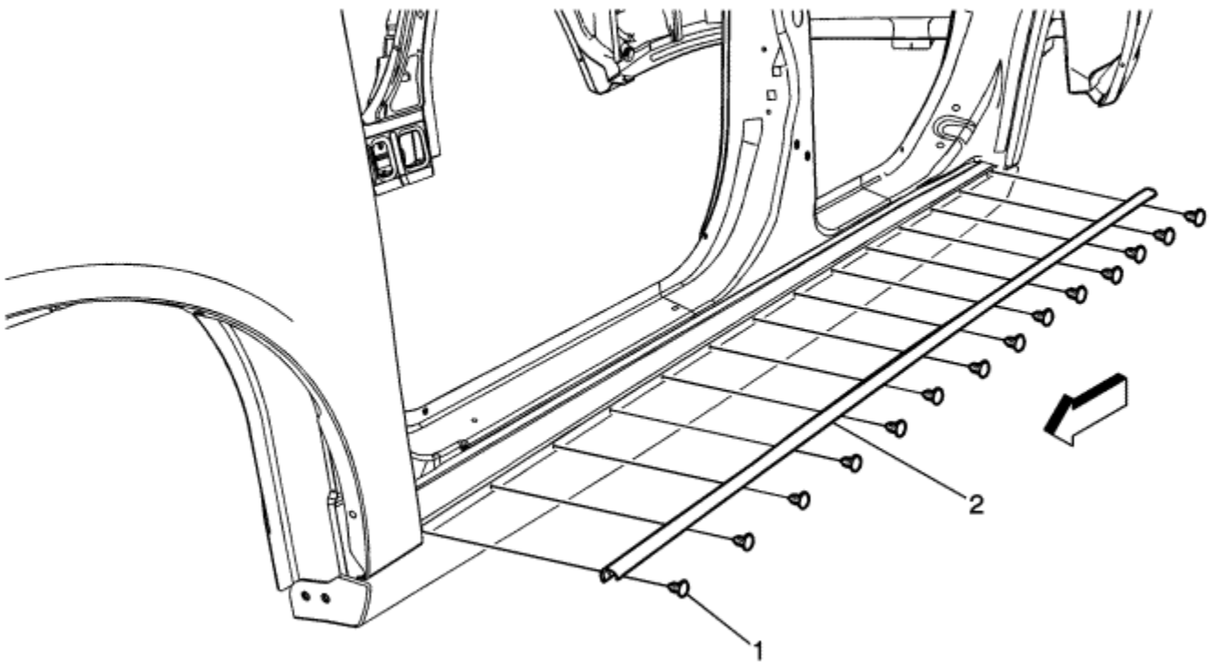

Callout	Component Name
1	Front and Rear Door Lower Weatherstrip Retainer (Qty: 15) **Procedure** 1. Open both doors on the side that the weatherstrip is being serviced.

	2. Use a suitable tool, removal of the weatherstrip retainers.
2	Front and Rear Door Lower Weatherstrip

© Copyright Chevrolet. All rights reserved

Front Side Door Weatherstrip Replacement - Door Side

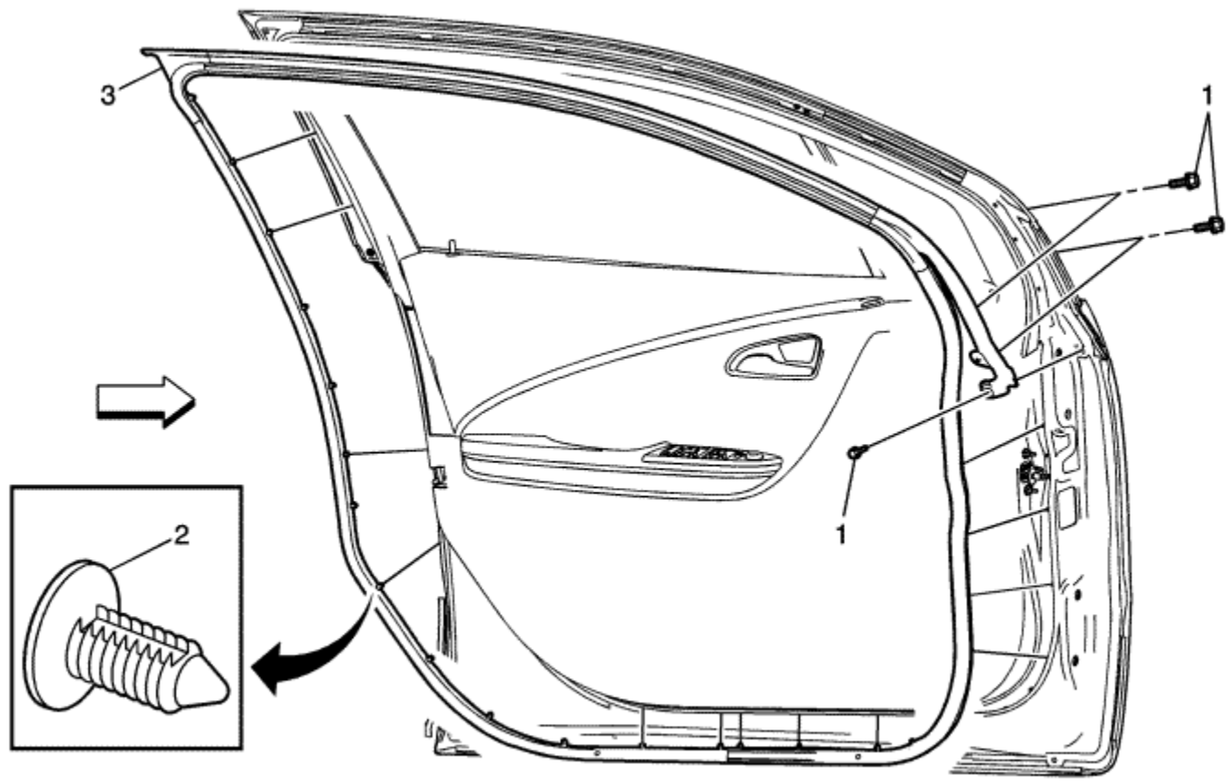

Callout	Component Name
Preliminary Procedures	

1. Remove the front outside rearview mirror. Refer to Outside Rearview Mirror Replacement .
2. Remove the front side mirror applique. Refer to Outside Rearview Mirror Applique Replacement .
3. Remove the front door check link from the body. Refer to Front Side Door Check Link Replacement .

1	Front Side Door Weatherstrip Front Push-In Retainer (Qty: 3)
2	Front Side Door Weatherstrip Push-In Retainers (Qty: 27) **Procedure** 1. Place the door in the full open position. 2. Place the window in the full down position. 3. Roll the upper rear corner of the weatherstrip to expose the upper push-in retainer.
3	Front Side Door Weatherstrip

© Copyright Chevrolet. All rights reserved

Front Side Door Weatherstrip Replacement - Body Side

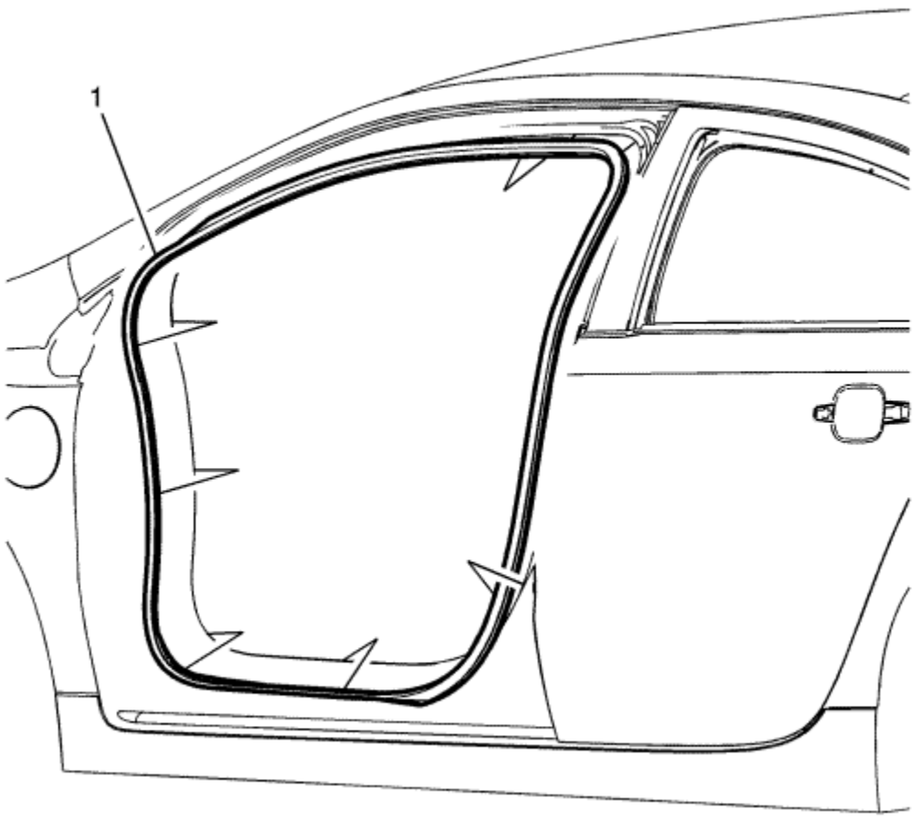

Callout	Component Name
1	Front Side Door Weatherstrip **Procedure** 1. Starting in the centre bottom, pull the weatherstrip upward and away from the pinch-weld flange.

	2. When installing start in the left upper corner of the pinch-weld flange, push inward on the flange until fully seated. 3. Inspect the door for proper operation.

© Copyright Chevrolet. All rights reserved

Liftgate Weatherstrip Replacement

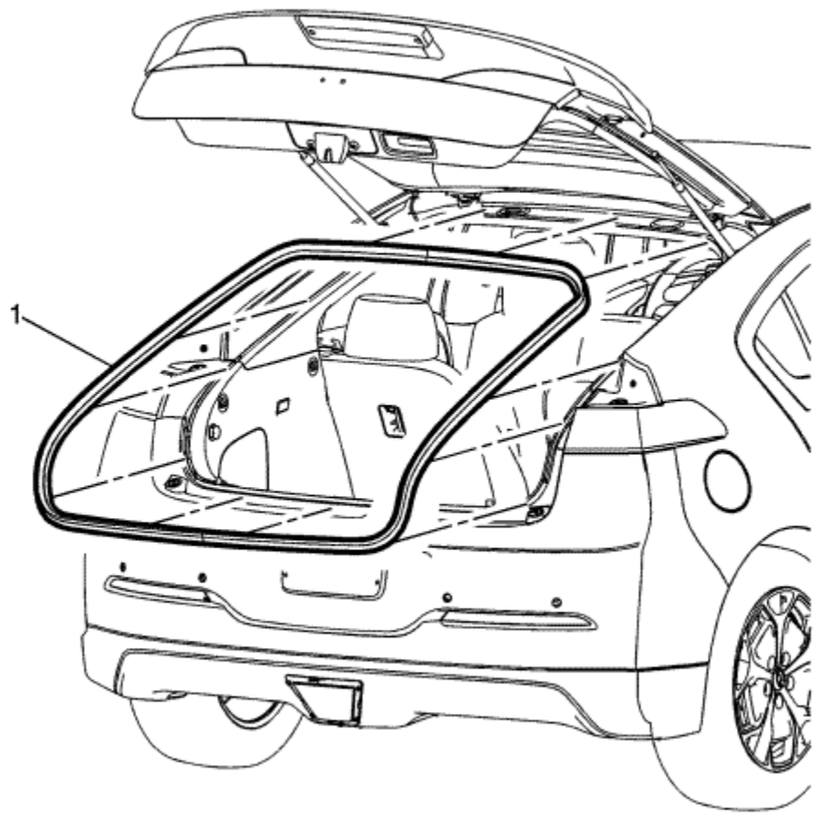

Callout	Component Name
1	Liftgate Weatherstrip **Procedure** Clean the area where the seal will be mounted. Use a suitable solvent with a mixture of 50 percent isopropyl alcohol and 50 percent water by volume, or high-flash

	naphtha.

© Copyright Chevrolet. All rights reserved

Rear Side Door Weatherstrip Replacement - Door Side

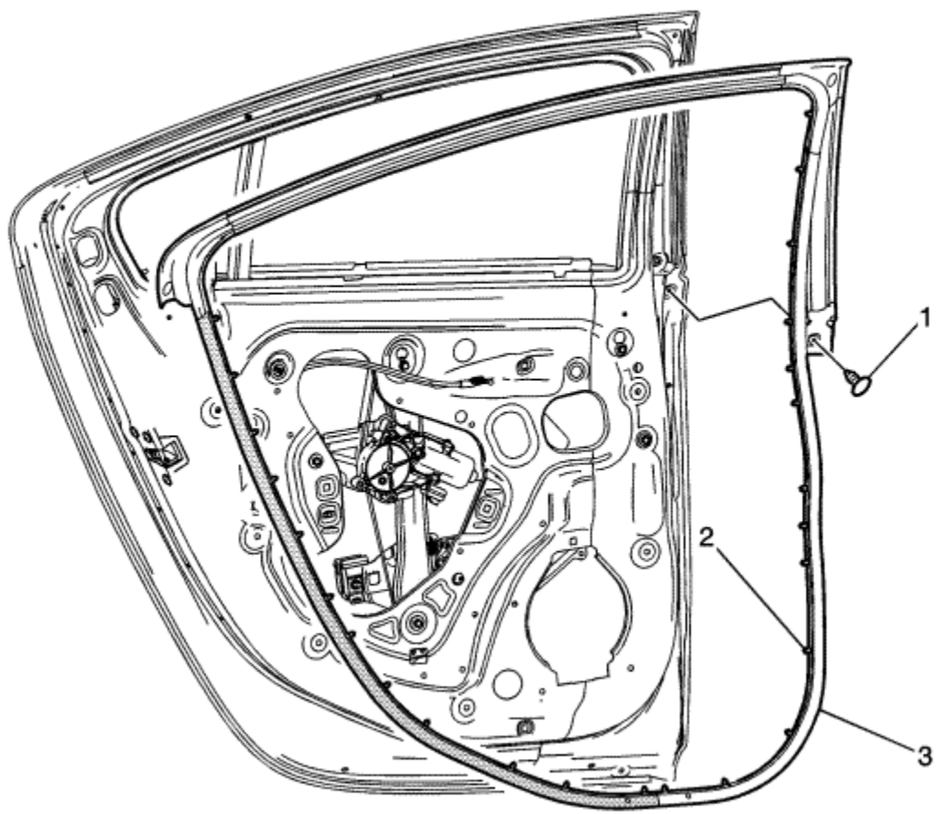

Callout	Component Name
Preliminary Procedure	
1. Remove the rear side door trim panel. Refer to Rear Side Door Trim Replacement . 2. Remove the rear door check link from the body. Refer to Rear Side Door Check Link Replacement .	

1	Rear Side Door Weatherstrip Front Retainer (Qty: 3) **Note :** Though only one retainer is shown, there are also retainers at the upper front corner and at the upper rear corner of the door.
2	Rear Side Door Weatherstrip Retainers (Qty: 28) **Procedure** Ensure that all retainers are removed.
3	Rear Side Door Weatherstrip **Procedure** Inspect the door for proper operation.

© Copyright Chevrolet. All rights reserved

Rear Side Door Weatherstrip Replacement - Body Side

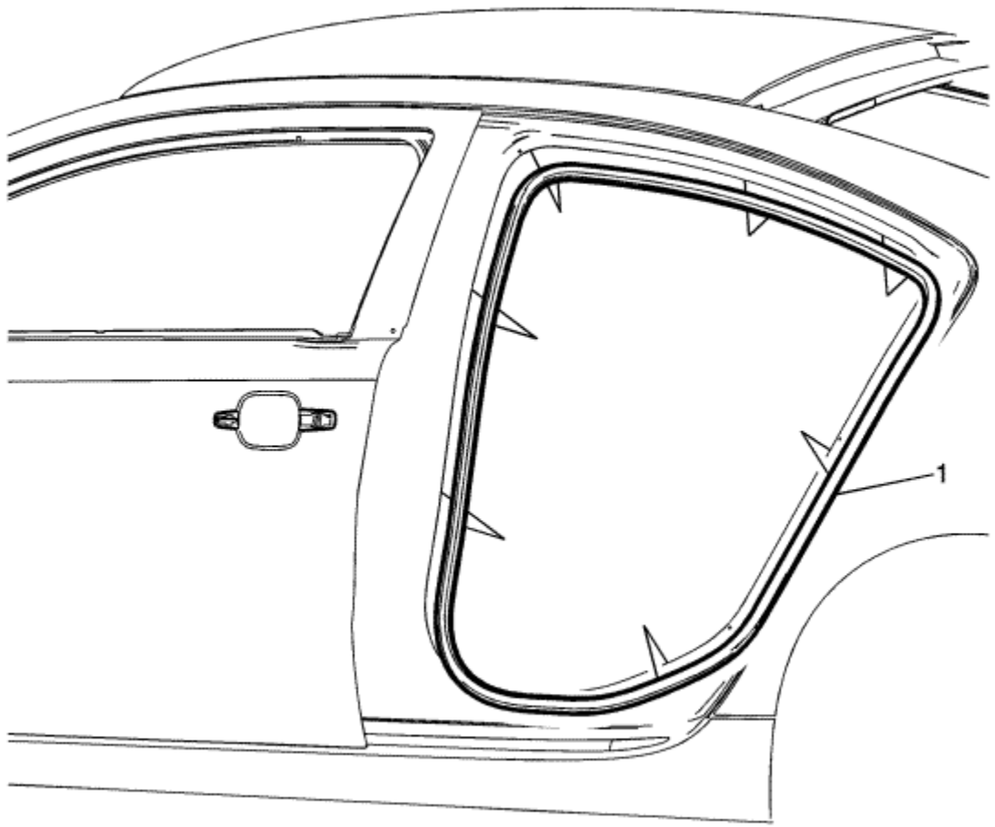

Callout	Component Name
1	Rear Side Door Weatherstrip **Procedure** 1. Starting in the centre bottom, pull the weatherstrip upward and away from the pinch-weld flange.

	2. When installing start in the left upper corner of the pinch-weld flange, push inward on the flange until fully seated. 3. Inspect the door for proper operation.

© Copyright Chevrolet. All rights reserved

Bonnet Ajar Indicator Description and Operation

Bonnet Ajar Indicator System Components

- Body control module (BCM)
- Hybrid Powertrain Control Module 2
- Driver information centre
- Bonnet ajar switch, part of the bonnet latch assembly

Bonnet Ajar Operation - Body Control Module

The BCM applies B+ to the bonnet ajar signal circuit and monitors the voltage to determine the position of the bonnet. The bonnet ajar switch contains a multiplexed resistor. This resistor will vary the voltage seen by the BCM by pulling down the applied voltage based on the position of the switch.

Bonnet Ajar Operation - Hybrid Powertrain Control Module 2

The hybrid powertrain control module 2 applies B+ to the bonnet ajar signal circuit and monitors the voltage to determine the position of the bonnet. The bonnet ajar switch contains a multiplexed resistor. This resistor will vary the voltage seen by the hybrid powertrain control module 2 by pulling down the applied voltage based on the position of the switch.

&#169© Copyright Chevrolet. All rights reserved

Fastener Tightening Specifications

Application	Specification	
	Metric	English
Front Bumper Fascia Centre Support Bracket Fastener	9 N·m	80 lb in
Front Bumper Fascia Upper/Lower Screws	3 N·m	27 lb in
Front Bumper Lower Fascia Screws	2.5 N·m	22 lb in
Front Bumper Upper Fascia Screws	2.5 N·m	22 lb in
Front End Panel Centre Deflector Bolts	3 N·m	27 lb in
Front End Panel Outer Deflector Bolts	3 N·m	27 lb in
Headlamp Bolt	2.5 N·m	22 lb in
Rear Bumper Fascia Upper/Lower Screws	3 N·m	27 lb in
Rear Bumper Impact Bar Nuts	40 N·m	30 lb ft
Rear Bumper Lower Fascia Screws	6 N·m	53 lb in
Rear Bumper Upper Fascia Screws	6 N·m	53 lb in

© Copyright Chevrolet. All rights reserved

Front Bumper Energy Absorber Replacement - Volt

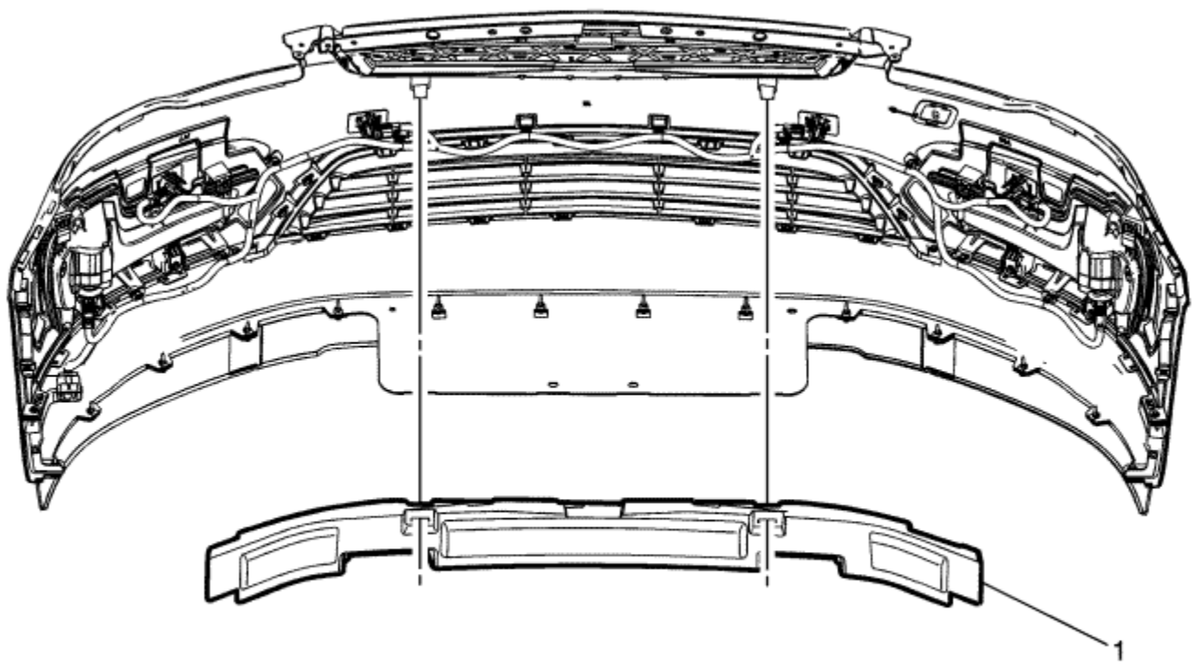

Callout	Component Name
Preliminary Procedure Remove the front fascia. Refer to Front Bumper Fascia Removal and Installation : Volt → Ampera .	
	Front Bumper Fascia Energy Absorber

1	**Procedure** 1. Reposition the electrical harness from the front fascia energy absorber. 2. Release the absorber by pulling the absorber from the front fascia retainers.

© Copyright Chevrolet. All rights reserved

Front Bumper Fascia Removal and Installation - Volt

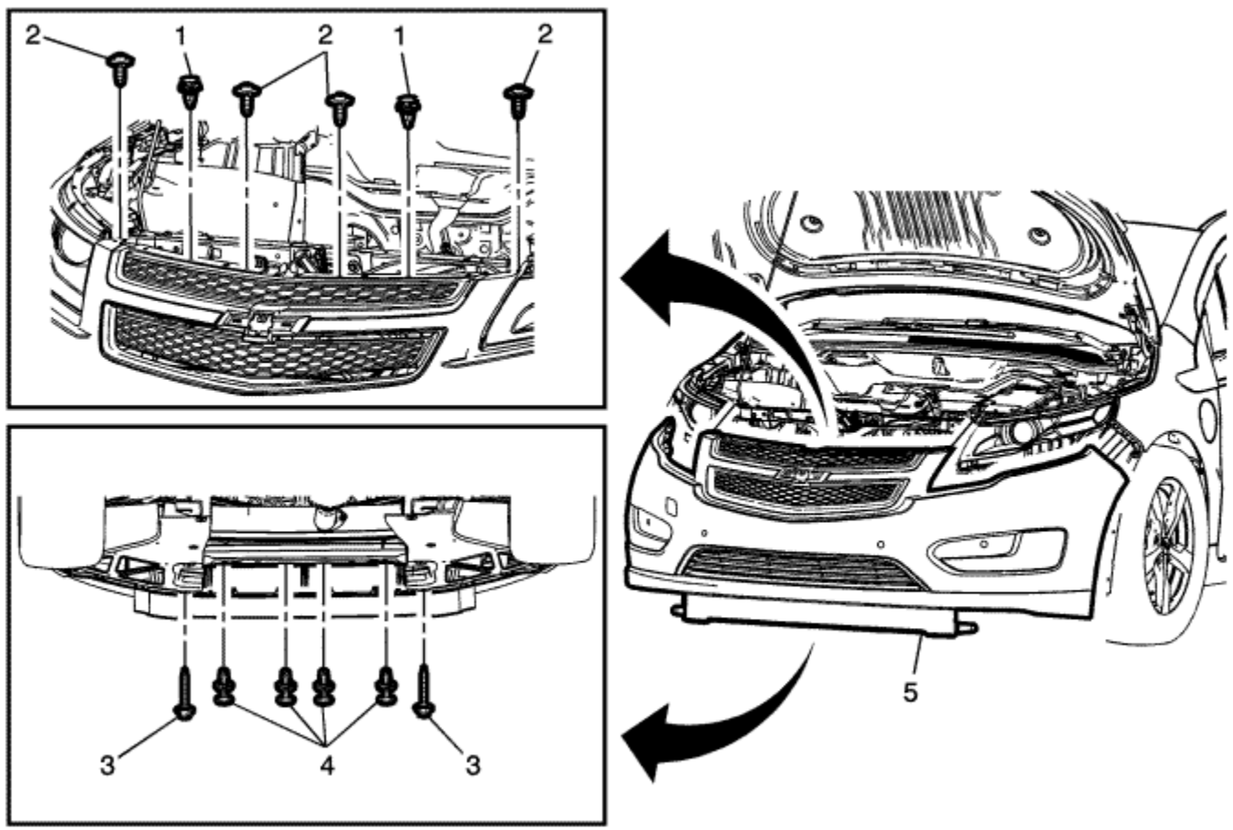

Callout	Component Name
Preliminary Procedures	

1. Remove the front end panel outer deflector. Refer to Front End Panel Outer Deflector Replacement : Volt → Ampera .
2. Remove the front compartment front sight shield. Refer to Front Compartment Front Sight Shield Replacement : Volt → Ampera .
3. Remove the windscreen washer solvent container filler tube. Refer to Windscreen Washer Solvent Container Filler Tube Replacement .

4. Remove the side four front screws from the front wheelhouse liners. Refer to Front Wheelhouse Front Liner Replacement .

1	Front Bumper Fascia Upper Push-In Retainer (Qty: 2)
2	Front Bumper Fascia Upper Screw (Qty: 4) **Caution :** Refer to Fastener Caution in the Preface section. **Tighten** 3 N·m (27 lb in)
3	Front Bumper Fascia Lower Screw (Qty: 2) **Tighten** 3 N·m (27 lb in)
4	Front Bumper Fascia Lower Push-In Retainer (Qty: 4)
5	Front Bumper Fascia **Procedure** 1. Carefully push a small nylon wedge between the fascia and the front fascia retainers. Insert a small flat-bladed tool into the fascia slot and depress the snaps one at a time and pull on the fascia at the same time to gradually remove the fascia from the front fascia retainers of the wing. 2. Disconnect any electrical connectors. 3. Transfer any parts as needed.

© Copyright Chevrolet. All rights reserved

Front Bumper Fascia Guide Replacement

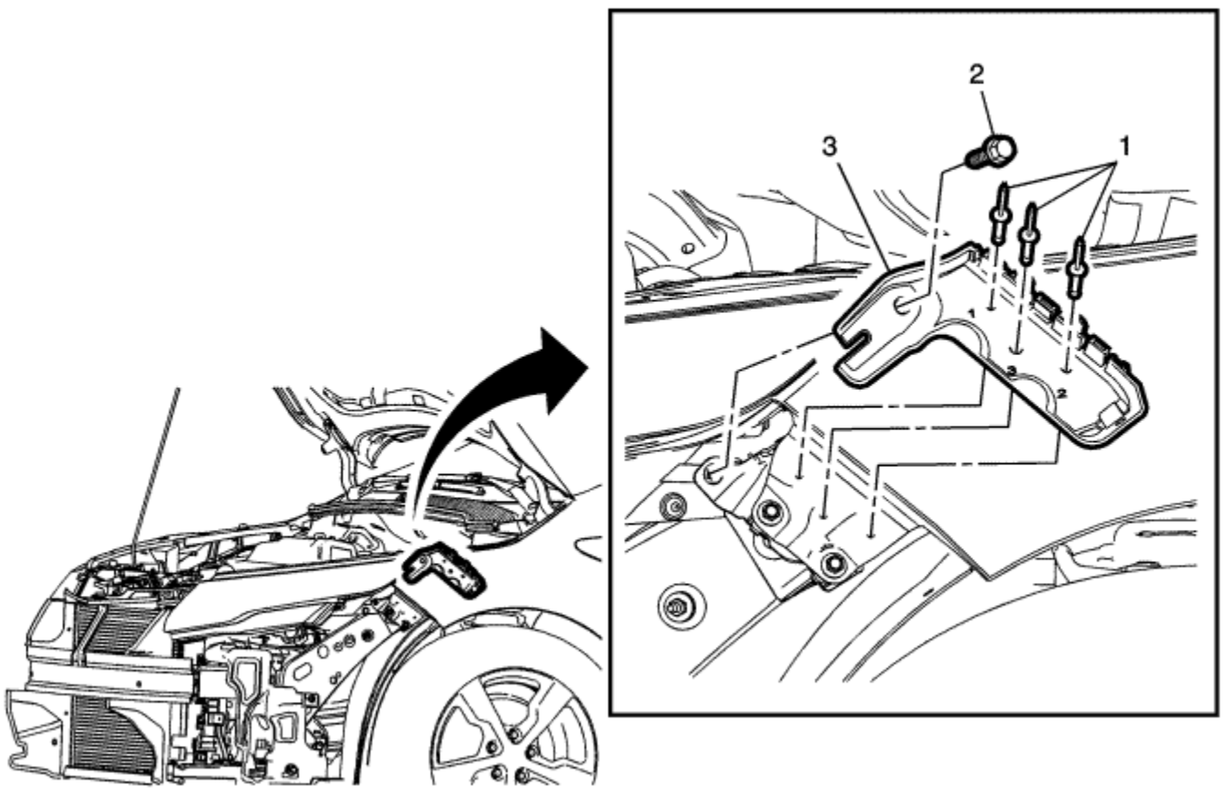

Callout	Component Name
Warning : Refer to Eye Protection Warning in the Preface section. **Preliminary Procedure** Remove the front bumper fascia. Refer to Front Bumper Fascia Removal and Installation : Volt → Ampera .	

1	Front Bumper Fascia Guide Rivet (Qty: 3)
2	Headlamp Bolt **Caution :** Refer to Fastener Caution in the Preface section. **Tighten** 2.5 N·m (22 lb in)
3	Front Bumper Fascia Guide

© Copyright Chevrolet. All rights reserved

Front Bumper Fascia Centre Support Replacement

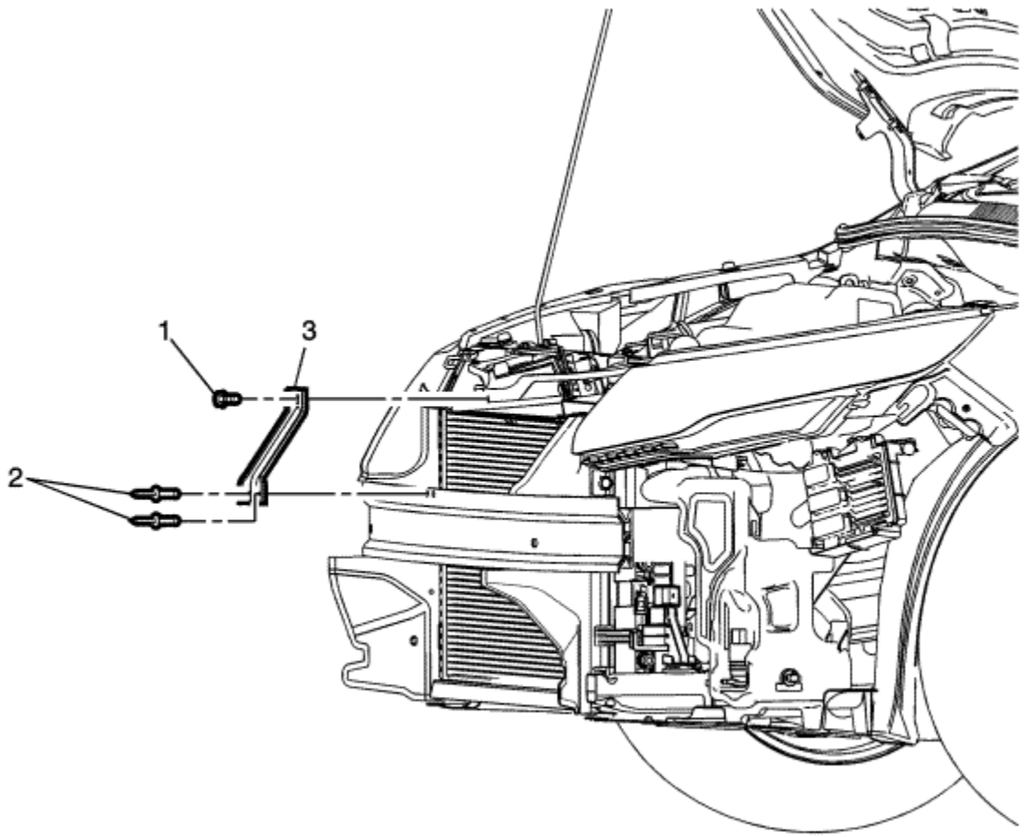

Callout	Component Name
Warning : Refer to Eye Protection Warning in the Preface section. **Preliminary Procedure** Remove the front bumper fascia. Refer to Front Bumper Fascia Removal and Installation : Volt → Ampera .	

1	Front Bumper Fascia Centre Support Bracket Bolt **Caution :** Refer to Fastener Caution in the Preface section. **Tighten** 9 N·m (80 lb in)
2	Front Bumper Fascia Rivet (Qty: 2)
3	Front Bumper Fascia Centre Support

© Copyright Chevrolet. All rights reserved

Front Bumper Fascia Center Support Bracket Replacement

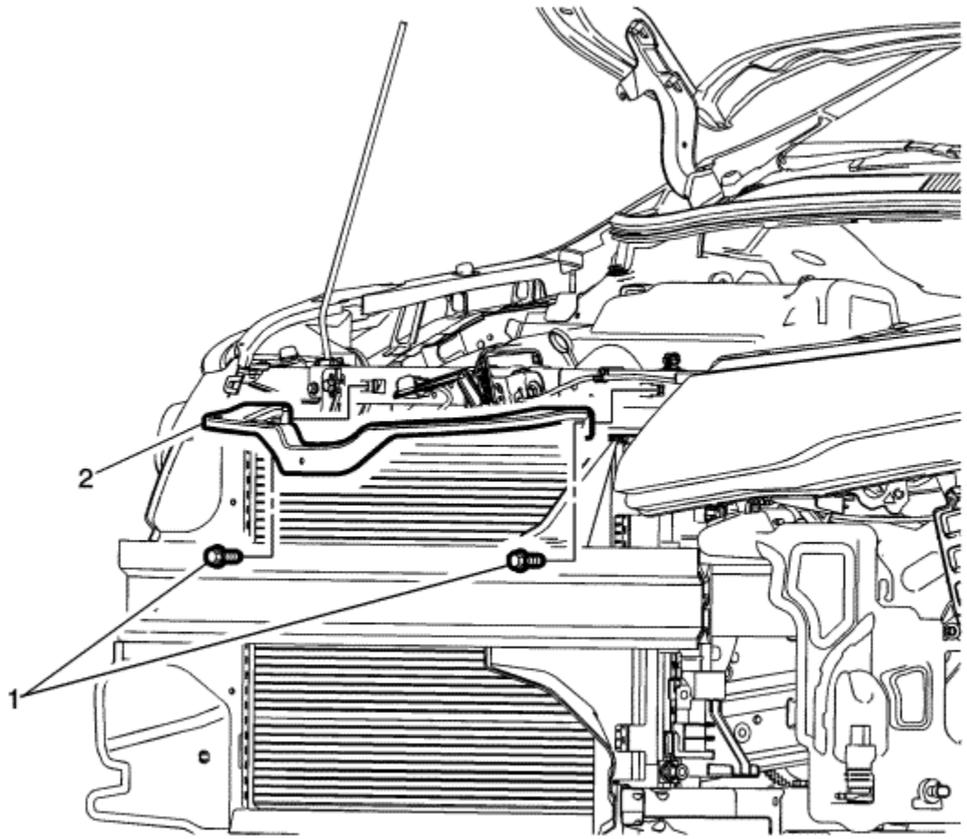

Callout	Component Name
Preliminary Procedure Remove the front bumper fascia centre support. Refer to Front Bumper Fascia Centre Support Replacement .	
	Front Bumper Fascia Centre Support Bracket Fastener (Qty : 2)

1	**Caution :** Refer to Fastener Caution in the Preface section. **Tighten** 9 N·m (80 lb in)
2	Front Bumper Fascia Center Support Bracket

© Copyright Chevrolet. All rights reserved

Front Bumper Lower Fascia Replacement - Volt

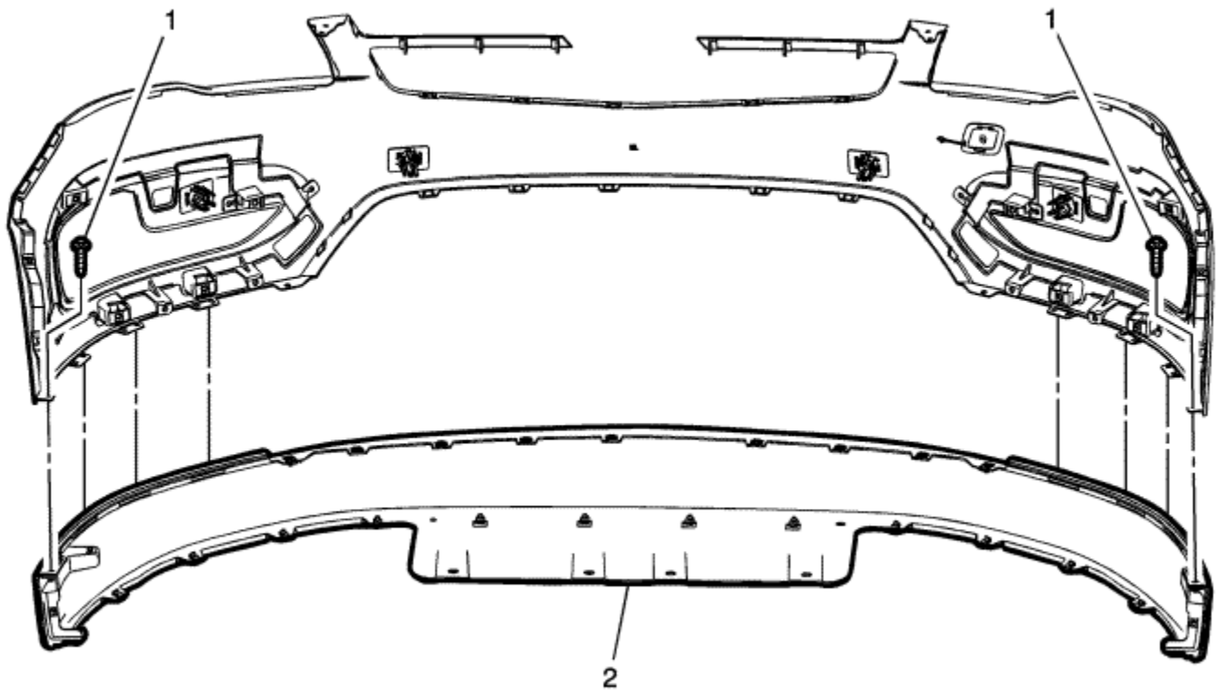

Callout	Component Name
Preliminary Procedures	
1. Remove the front bumper fascia. Refer to Front Bumper Fascia Removal and Installation : Volt → Ampera . 2. Remove the front bumper lower fascia centre grille. Refer to Front Bumper Lower Fascia Centre Grille Replacement : Ampera .	

1	Front Bumper Lower Fascia Screw (Qty: 2) **Caution :** Refer to Fastener Caution in the Preface section. **Procedure** 1. Carefully push a small nylon wedge between the upper fascia and the lower fascia. Insert a small flat-bladed tool into the fascia slot and depress the tabs one at a time and pull on the upper fascia at the same time to gradually remove the lower fascia from the upper fascia. 2. Transfer parts as needed. **Tighten** 2.5 N·m (22 lb in)
2	Front Bumper Lower Fascia

© Copyright Chevrolet. All rights reserved

Front Bumper Upper Fascia Replacement - Volt

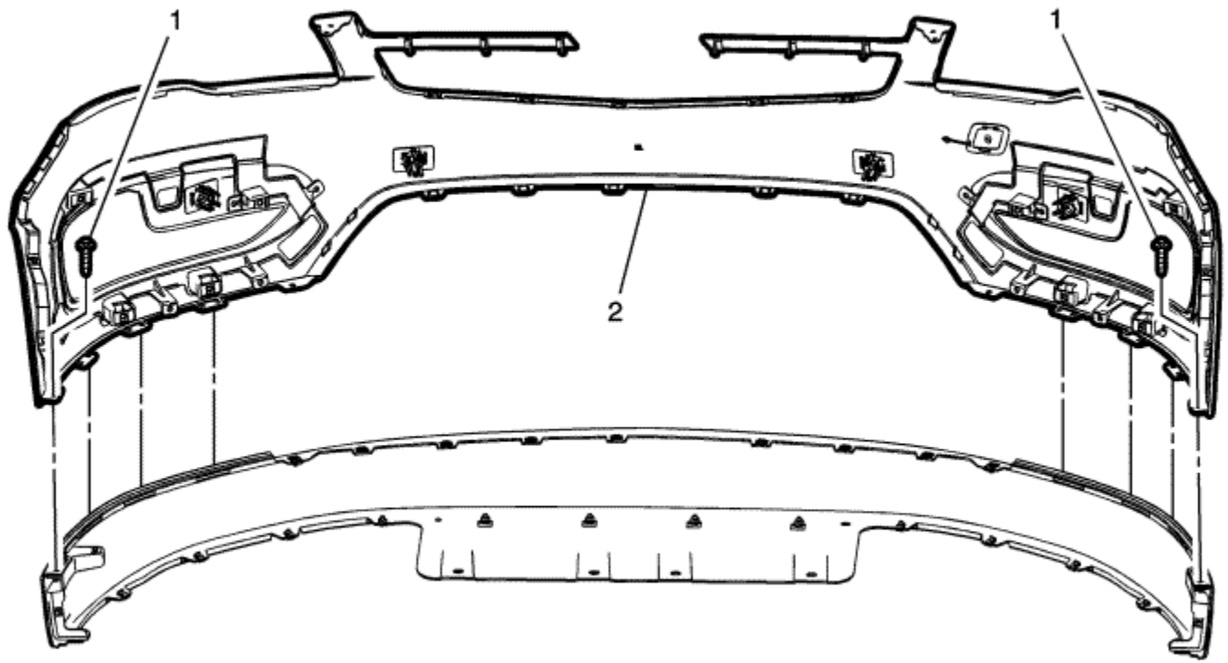

Callout	Component Name
Preliminary Procedures	
1. Remove the front bumper fascia. Refer to Front Bumper Fascia Removal and Installation : Volt → Ampera . 2. Remove the front bumper lower fascia centre grille. Refer to Front Bumper Lower Fascia Centre Grille Replacement : Ampera .	

1	Front Bumper Upper Fascia Screw (Qty: 2) **Caution :** Refer to Fastener Caution in the Preface section. **Procedure** 1. Carefully push a small nylon wedge between the lower fascia and the upper fascia. Insert a small flat-bladed tool into the fascia slot and depress the tabs one at a time and pull on the upper fascia at the same time to gradually remove the upper fascia from the lower fascia. 2. Transfer parts as needed. **Tighten** 2.5 N·m (22 lb in)
2	Front Bumper Upper Fascia

© Copyright Chevrolet. All rights reserved

Front End Panel Outer Deflector Replacement - Volt

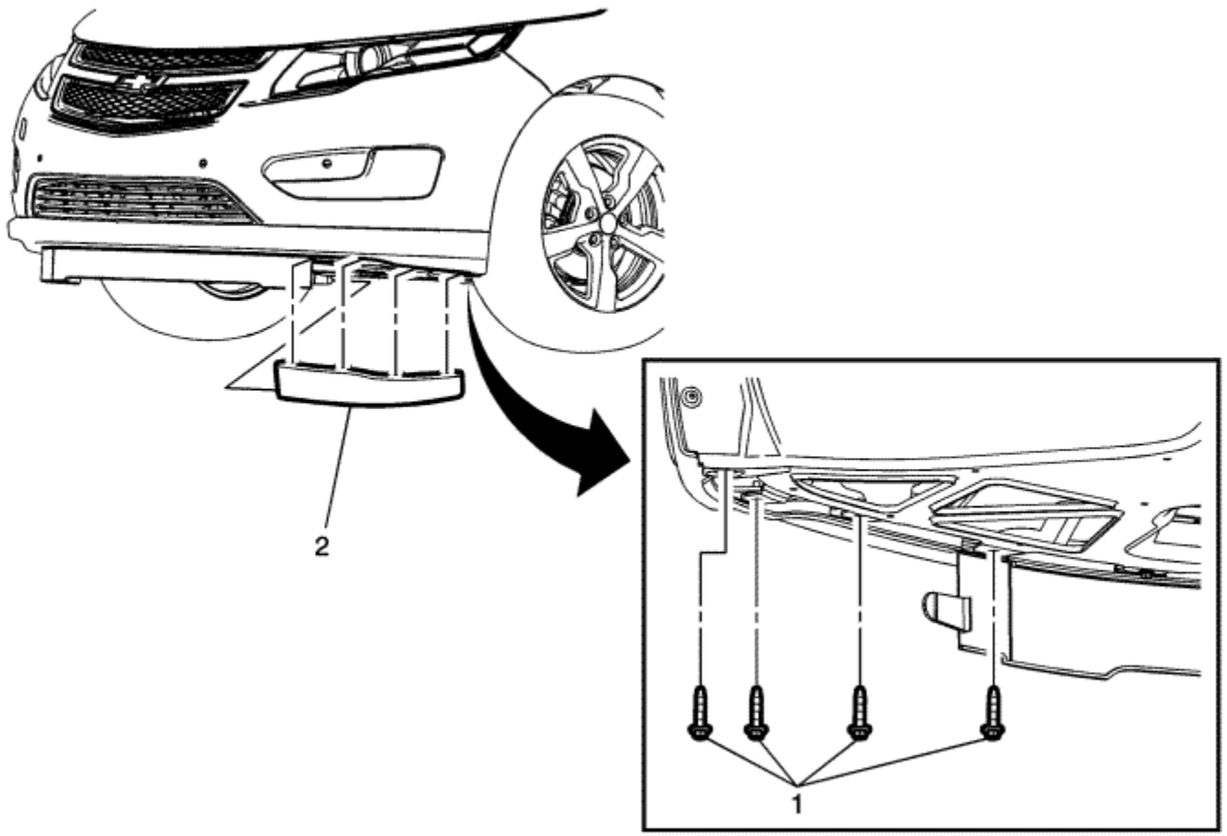

Callout	Component Name
1	Front End Panel Outer Deflector Bolt (Qty: 4) **Caution :** Refer to Fastener Caution in the Preface section. **Tighten** 3 N·m (27 lb in)

2	Front End Panel Outer Deflector

© Copyright Chevrolet. All rights reserved

Front End Panel Centre Deflector Replacement - Volt

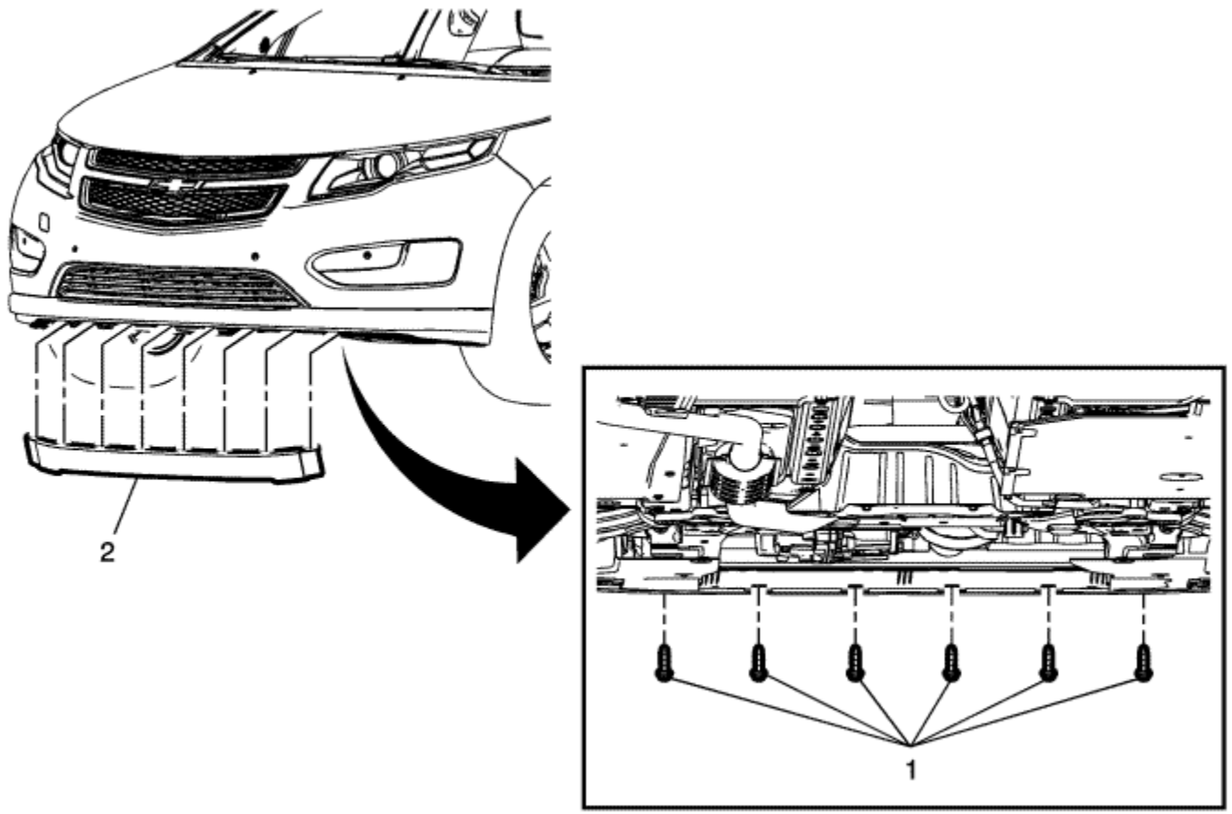

Callout	Component Name
1	Front End Panel Centre Deflector Bolt (Qty: 6) **Caution :** Refer to Fastener Caution in the Preface section. **Tighten** 3 N·m (27 lb in)

2	Front End Panel Centre Deflector

© Copyright Chevrolet. All rights reserved

Rear Bumper Fascia Removal and Installation - Volt

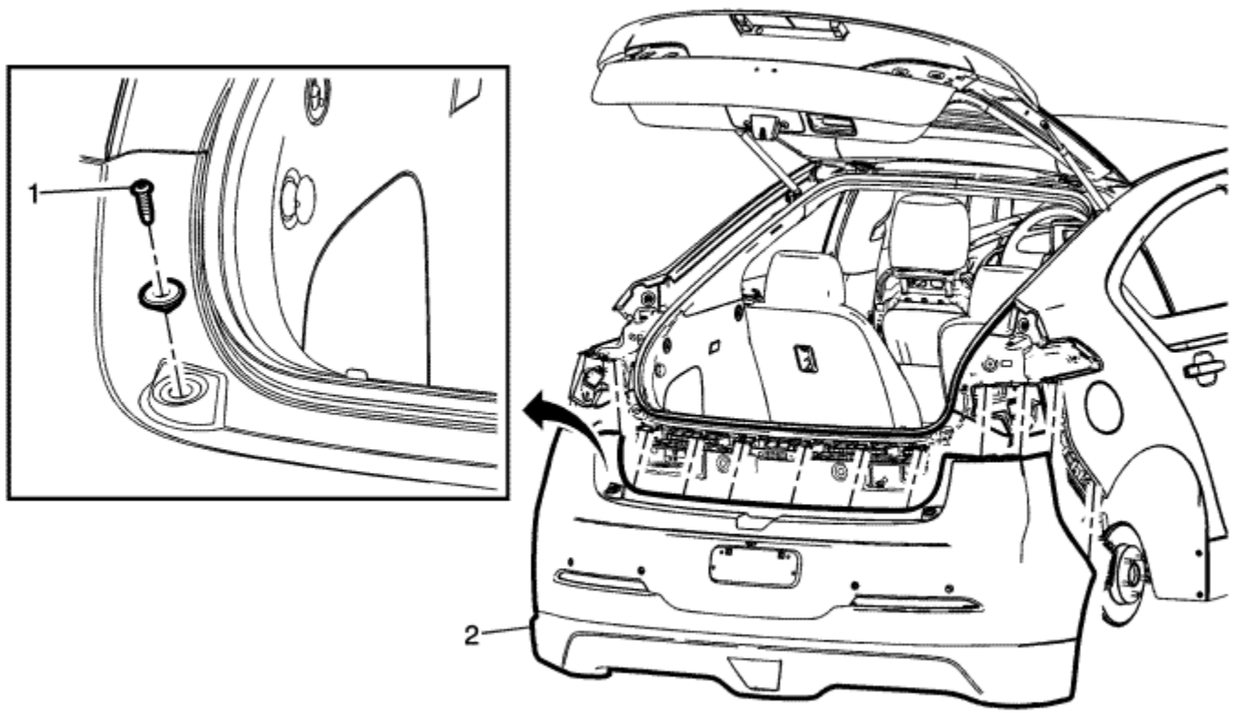

Callout	Component Name
Preliminary Procedures 1. Remove the underbody rear air deflector to fascia bolts. Refer to Underbody Rear Air Deflector Replacement . 2. Remove the rear screws from the wheelhouse liner. Refer to Rear Wheelhouse Panel Liner Replacement .	

1	Rear Bumper Fascia Upper Screw (Qty: 2) **Caution :** Refer to Fastener Caution in the Preface section. **Tighten** 3 N·m (27 lb in)
2	Rear Bumper Fascia **Procedure** 1. Reposition the lower liftgate weatherstrip to access the centre fascia guide. 2. Insert a small flat-bladed tool into the fascia centre guide and depress the snaps one at a time and pull on the fascia working from one side to the other to remove the fascia from the rear fascia guides. 3. Disconnect the electrical connectors.

© Copyright Chevrolet. All rights reserved

Rear Bumper Fascia Guide Replacement

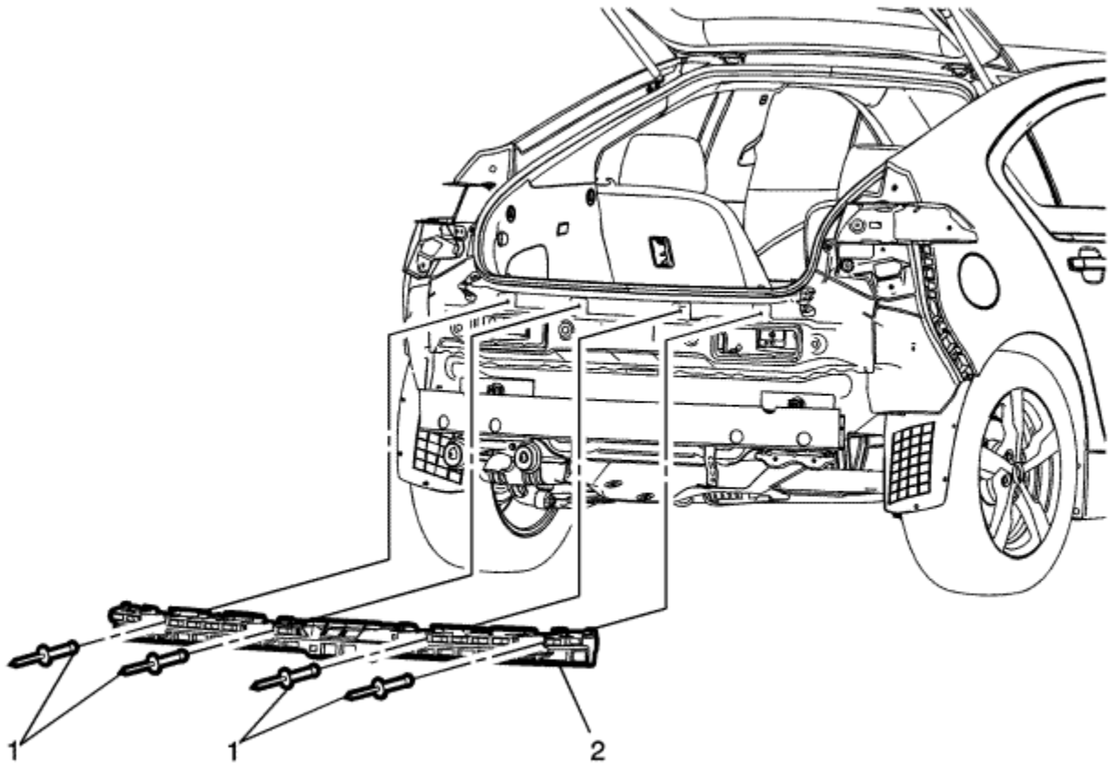

Callout	Component Name
Warning : Refer to Eye Protection Warning in the Preface section. **Preliminary Procedure** Remove the rear bumper fascia. Refer to Rear Bumper Fascia Removal and Installation : Volt → Ampera .	

1	Rear Bumper Fascia Guide Rivet (Qty: 4)
2	Rear Bumper Fascia Guide

© Copyright Chevrolet. All rights reserved

Rear Bumper Fascia Inner Guide Replacement

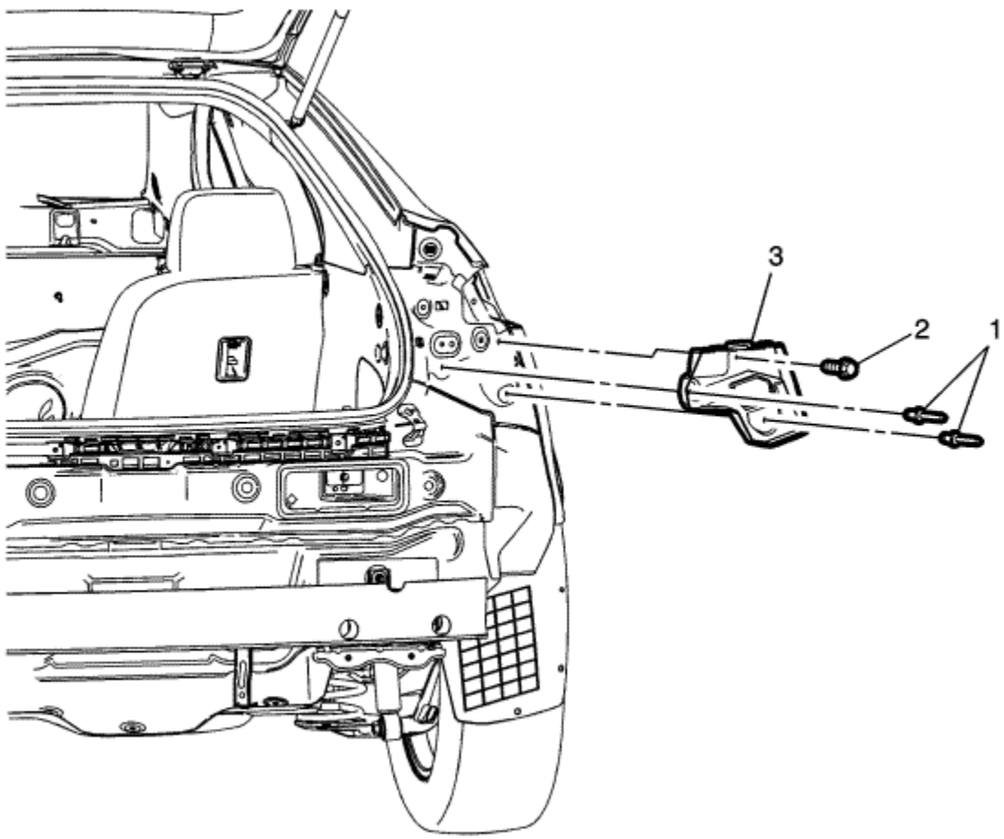

Callout	Component Name
Warning : Refer to Eye Protection Warning in the Preface section. **Preliminary Procedure** Remove the rear bumper fascia. Refer to Rear Bumper Fascia Removal and Installation : Volt → Ampera .	

1	Rear Bumper Fascia Inner Guide Rivet (Qty: 2)
2	Rear Bumper Fascia Inner Guide Screw **Caution :** Refer to Fastener Caution in the Preface section. **Tighten** 3 N·m (27 lb in)
3	Rear Bumper Fascia Inner Guide

© Copyright Chevrolet. All rights reserved

Rear Bumper Fascia Outer Guide Replacement

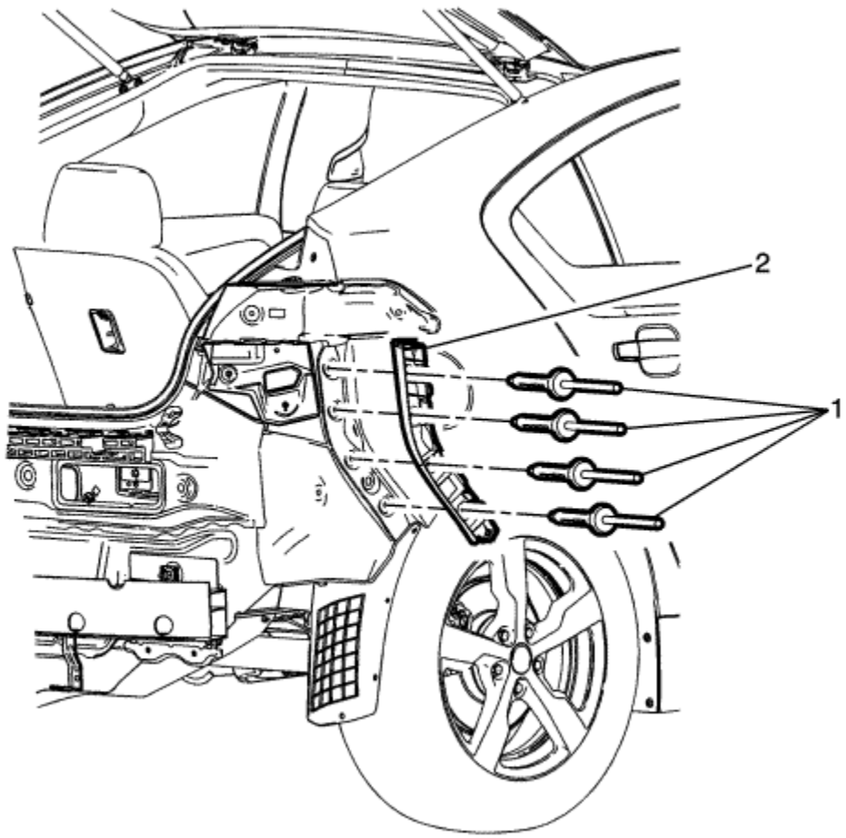

Callout	Component Name
Warning : Refer to Eye Protection Warning in the Preface section. **Preliminary Procedure** Remove the rear bumper fascia. Refer to Rear Bumper Fascia Removal and Installation : Volt → Ampera .	

1	Rear Bumper Fascia Outer Guide Rivet (Qty: 4)
2	Rear Bumper Fascia Outer Guide

© Copyright Chevrolet. All rights reserved

Rear Bumper Upper Fascia Replacement - Volt

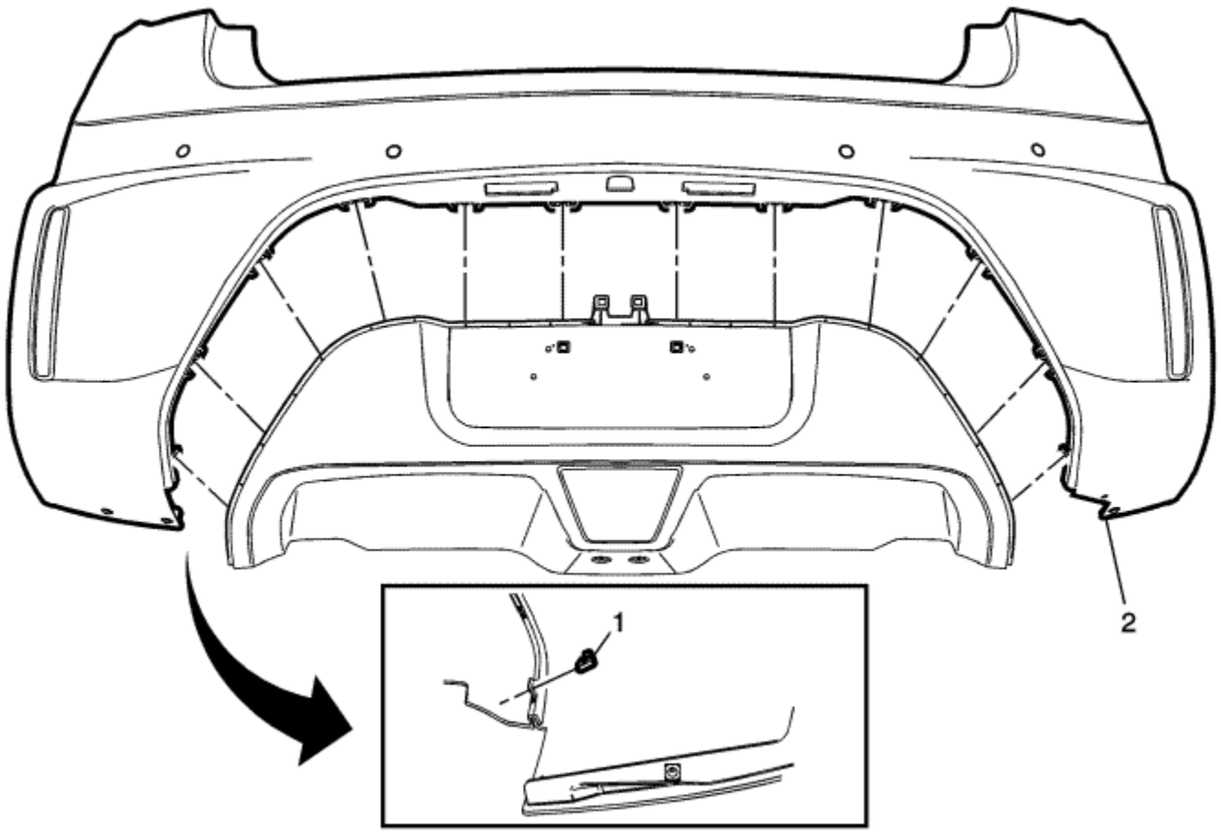

Callout	Component Name
Preliminary Procedures	
1. Remove the rear bumper fascia. Refer to Rear Bumper Fascia Removal and Installation : Volt → Ampera . 2. Remove the rear bumper fascia energy absorber. Refer to Rear Bumper Energy Absorber Replacement : Volt → Ampera .	

1	Rear Bumper Upper Fascia Retainer (Qty: 2) **Caution :** Refer to Fastener Caution in the Preface section.
2	Rear Bumper Upper Fascia **Procedure** 1. Carefully push a small nylon wedge between the upper fascia and the lower fascia. Insert a small flat-bladed tool into the fascia slot and depress the snaps one at a time and pull on the fascia at the same time to gradually remove the lower fascia from the upper fascia. 2. Transfer part as necessary.

© Copyright Chevrolet. All rights reserved

Rear Bumper Lower Fascia Replacement - Volt

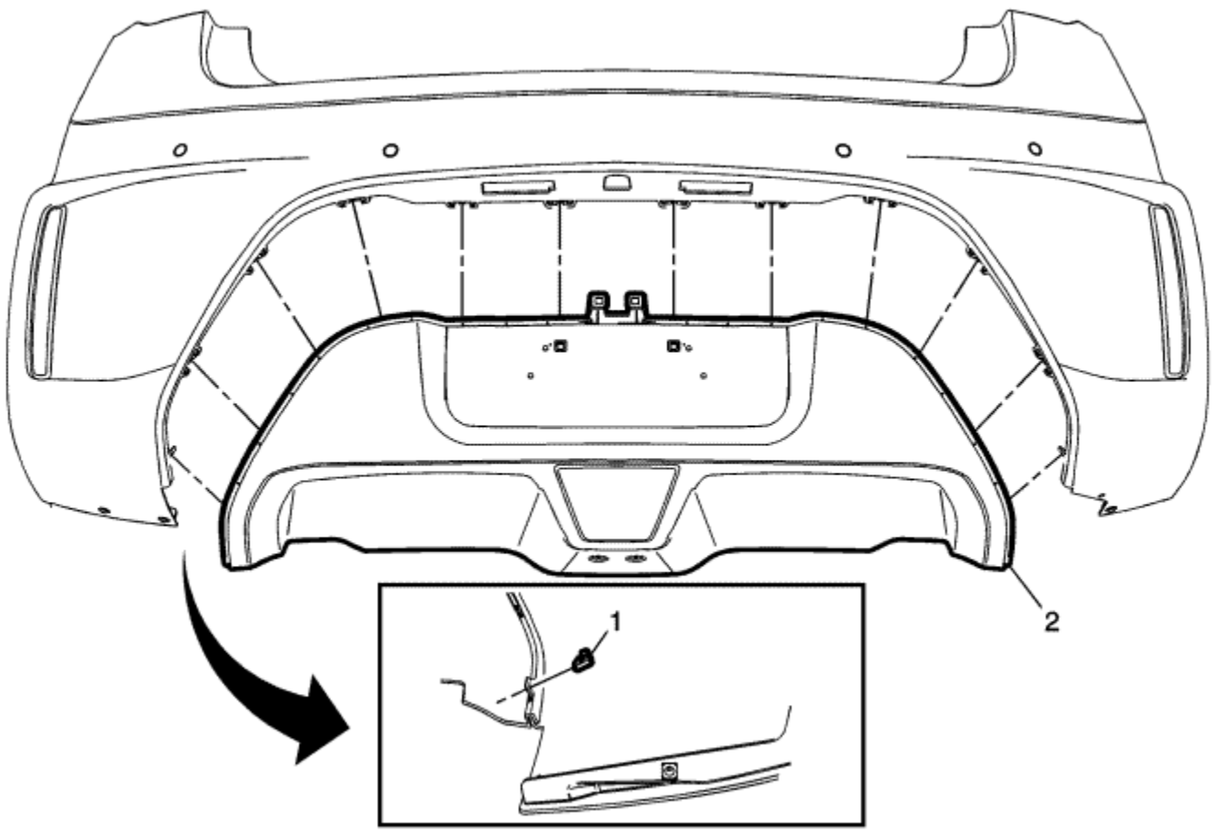

Callout	Component Name
Preliminary Procedures 1. Remove the rear bumper fascia. Refer to Rear Bumper Fascia Removal and Installation : Volt → Ampera . 2. Remove the rear bumper fascia energy absorber. Refer to Rear Bumper Energy Absorber Replacement : Volt → Ampera .	

1	Rear Bumper Lower Fascia Retainer (Qty: 2) **Caution :** Refer to Fastener Caution in the Preface section.
2	Rear Bumper Lower Fascia **Procedure** 1. Carefully push a small nylon wedge between the upper fascia and the lower fascia. Insert a small flat-bladed tool into the fascia slot and depress the snaps one at a time and pull on the fascia at the same time to gradually remove the lower fascia from the upper fascia. 2. Transfer part as necessary.

© Copyright Chevrolet. All rights reserved

Rear Bumper Energy Absorber Replacement - Volt

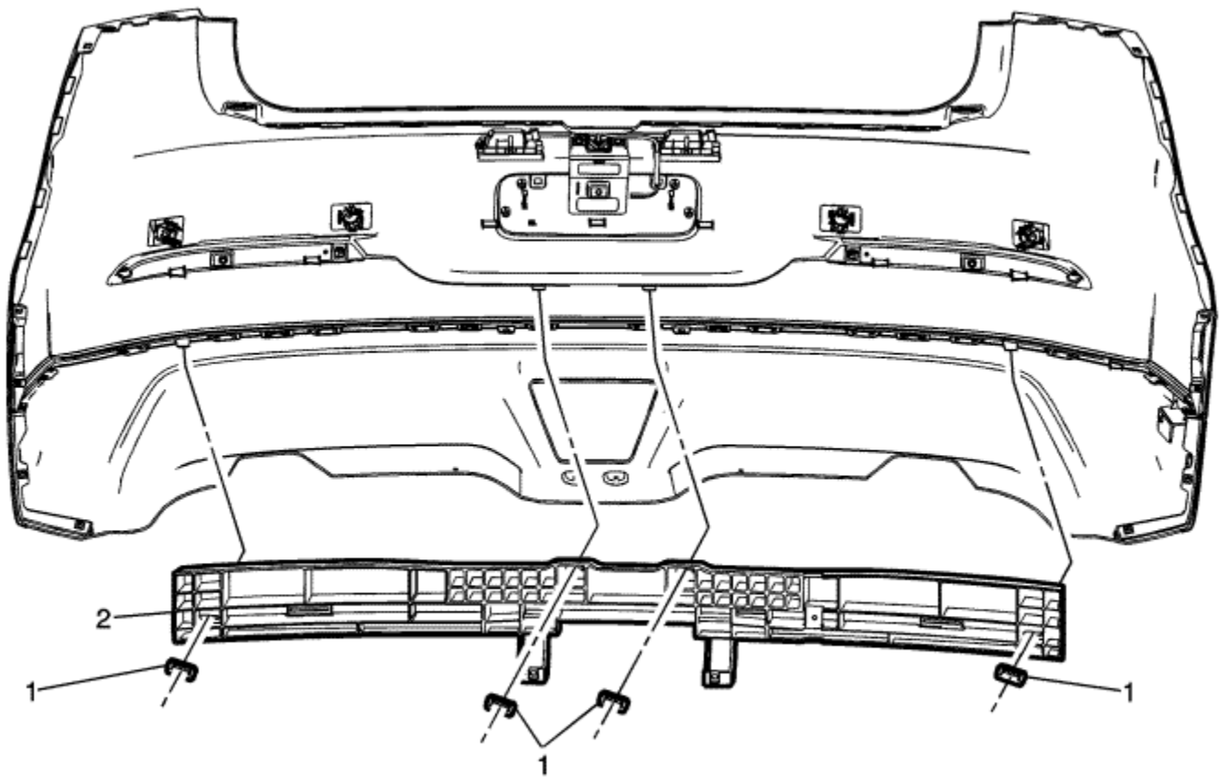

Callout	Component Name
Preliminary Procedures 1. Remove the rear bumper fascia. Refer to Rear Bumper Fascia Removal and Installation : Volt → Ampera . 2. Remove the back-up lamp. Refer to Reverse Lamp Replacement .	

1	Rear Bumper Energy Absorber Retainer (Qty: 4) **Procedure** 1. Disconnect the electrical connector/harness. 2. Disengage the retainers.
2	Rear Bumper Energy Absorber

© Copyright Chevrolet. All rights reserved

Rear Bumper Impact Bar Replacement

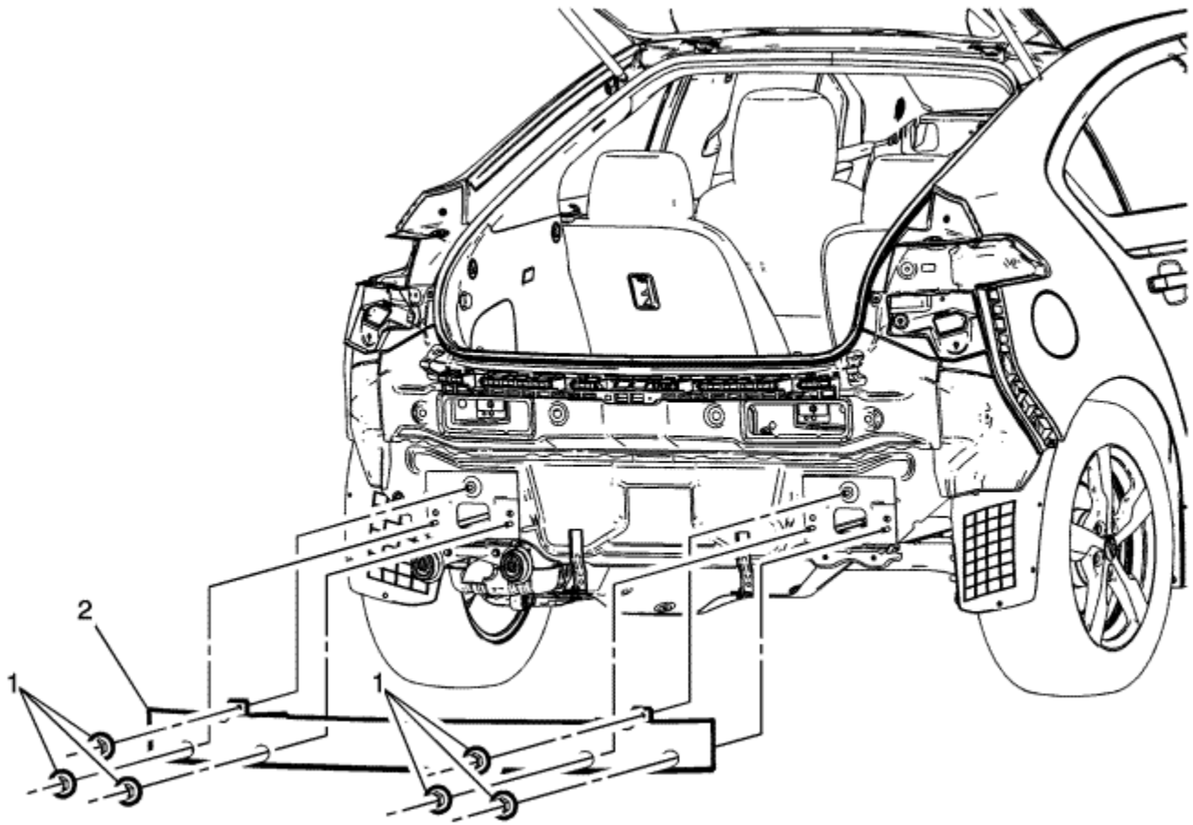

Callout	Component Name
Preliminary Procedure Remove the rear bumper fascia. Refer to Rear Bumper Fascia Removal and Installation : Volt → Ampera .	
	Rear Bumper Impact Bar Nut (Qty: 6)

1	**Caution :** Refer to Fastener Caution in the Preface section. **Tighten** 40 N·m (30 lb ft)
2	Rear Bumper Impact Bar **Procedure** Transfer any parts as needed.

© Copyright Chevrolet. All rights reserved

Dimensions - Body

Point-to-point measurements are for reference only. All measurements are given in millimeters. Use these measurements for diagnosing and estimating. Point-to-point measurements are duplicated with tram bar pointers set at equal lengths. All die marks, holes, slots, and fasteners are measured to the centre. All dimensions are symmetrical unless otherwise specified.

Point-to-Point Measurements

Front End

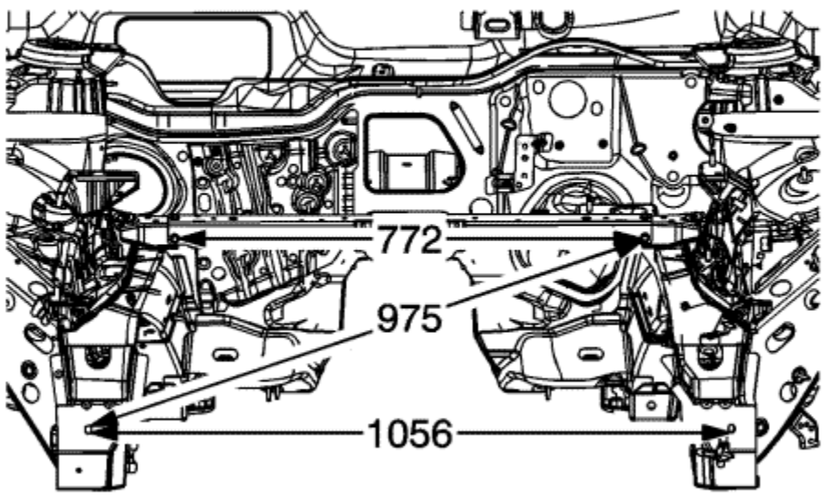

Engine Compartment

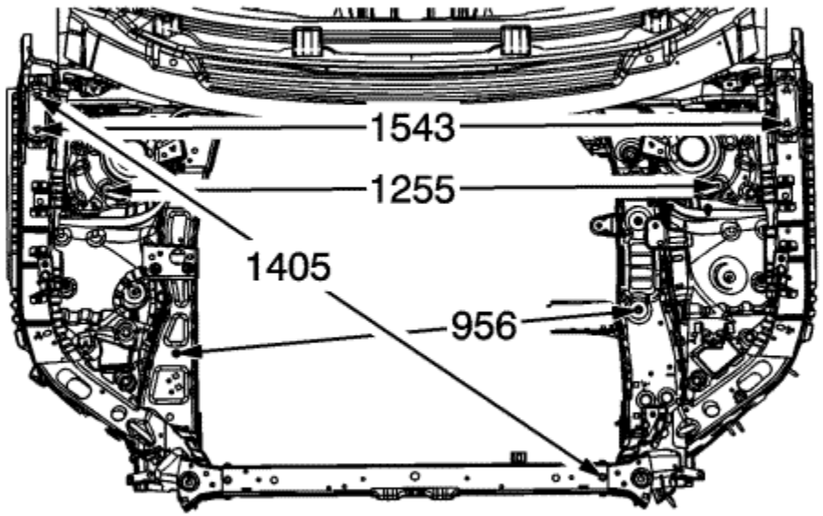

Front End Lower

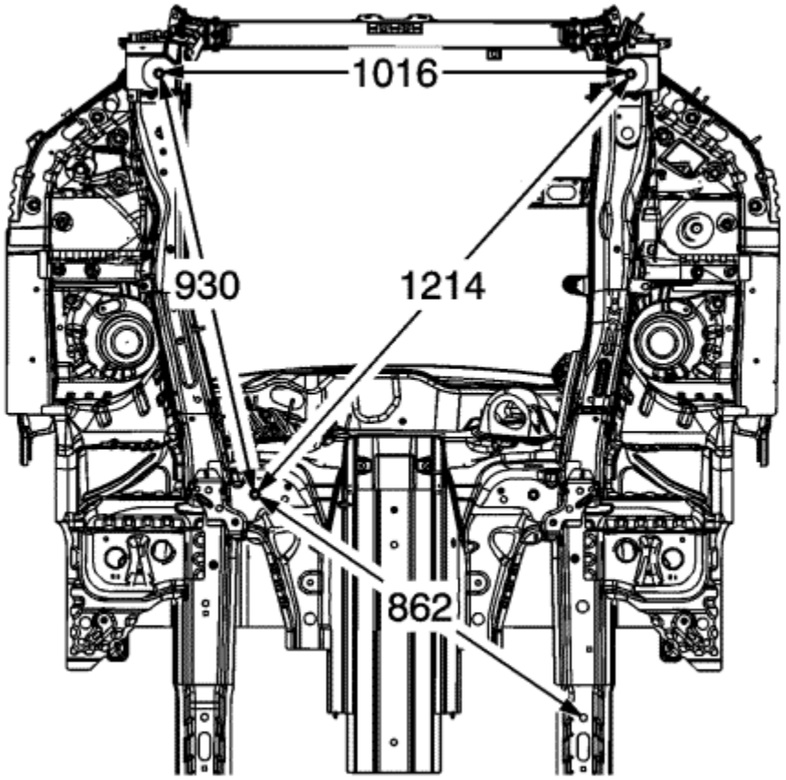

Rear End Lower

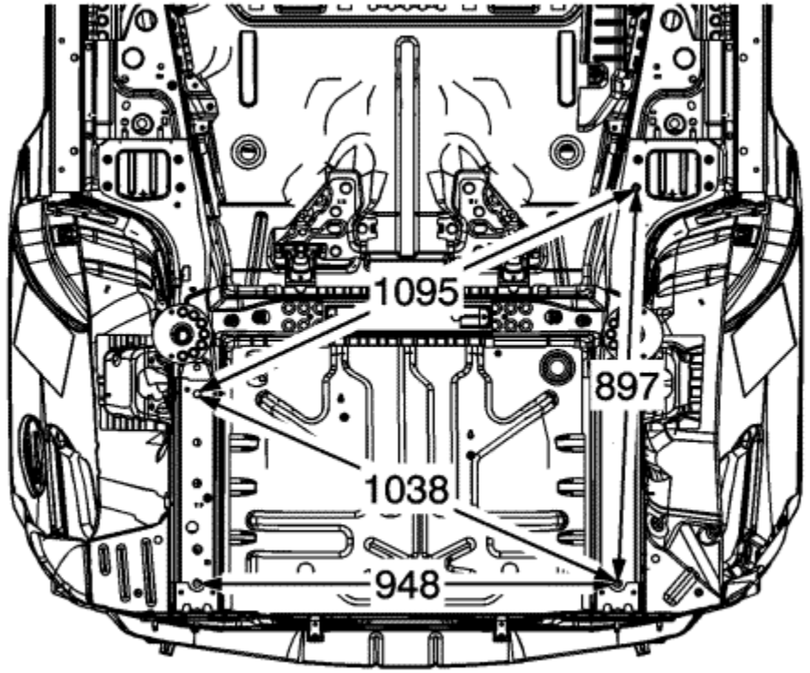

Rear End

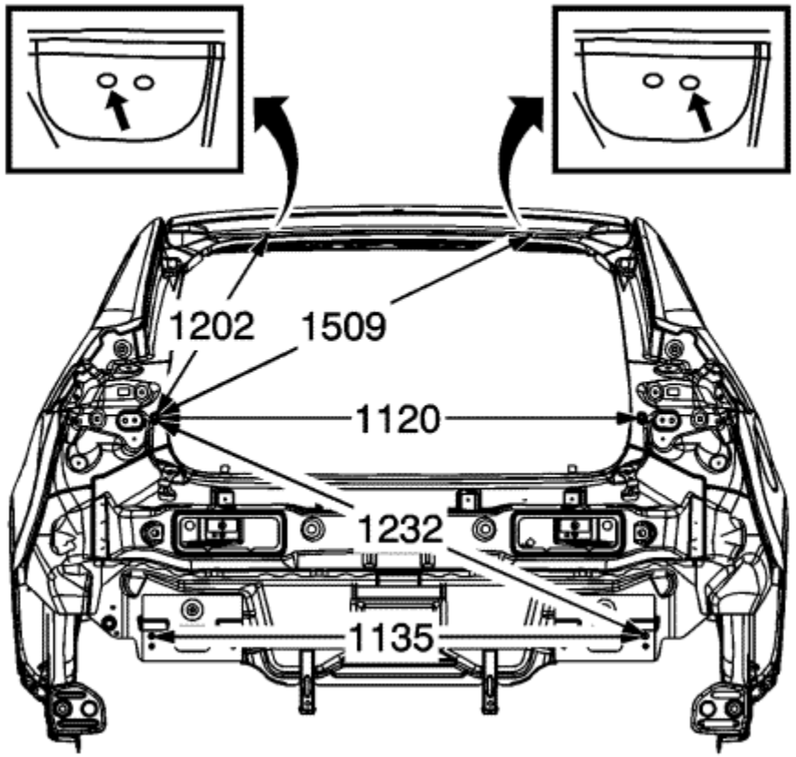

Side

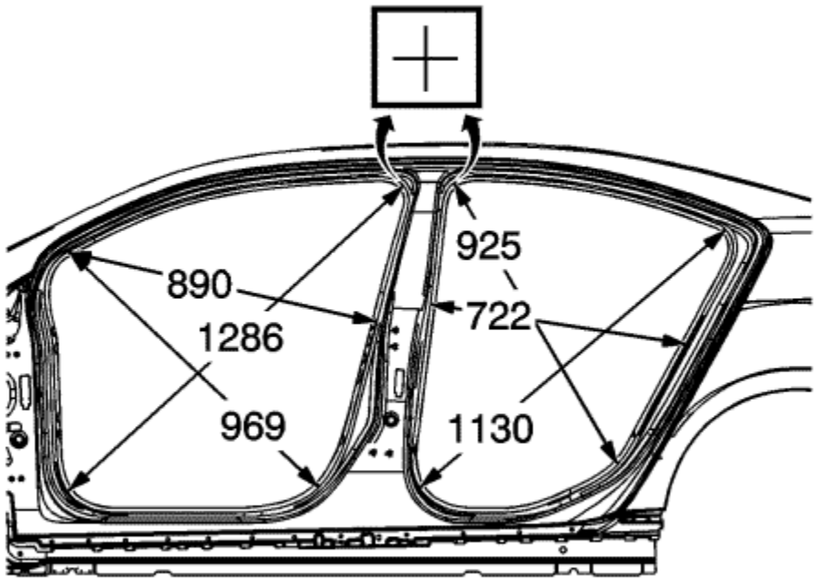

© Copyright Chevrolet. All rights reserved

Structure Identification

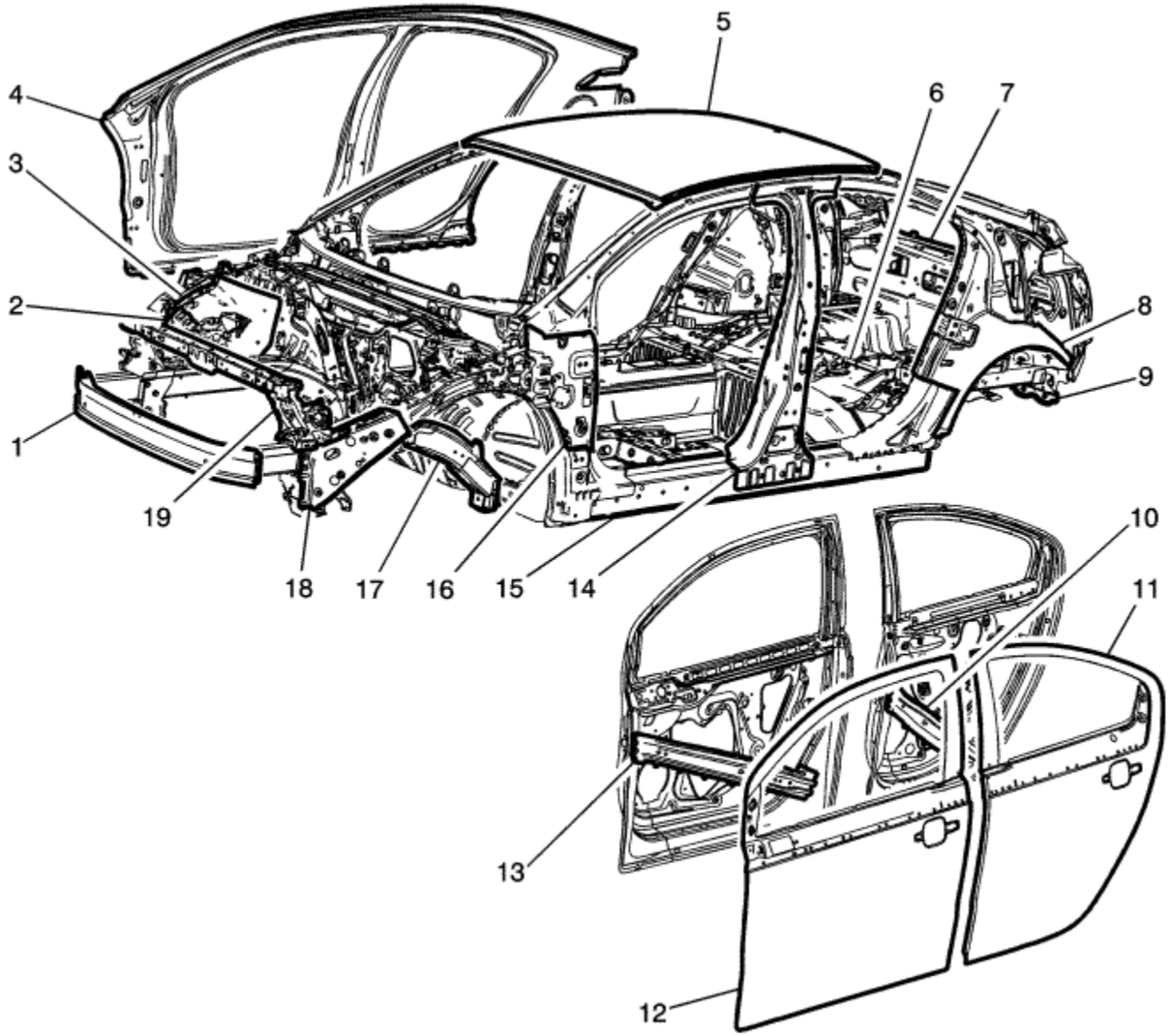

Number	Description	Material	Procedure
1	Bumper Impact Beam	Aluminium	Front Bumper Impact Bar Replacement
2	Front Compartment Upper Side Rail	Mild Steel	Front Compartment Upper Side Rail Replacement
3	Front Wheelhouse	Mild Steel	• Front Wheel housing Panel Replacement • Front Wheelhouse Front Panel Replacement
			• Quarter Outer Panel Sectioning

4	Outer Bodyside Panel	Mild Steel	• Front Hinge Pillar Body Sectioning • Centre Pillar Sectioning - Outer • Rocker Outer Panel Sectioning
5	Roof Outer Panel	Mild Steel	Roof Outer Panel Replacement
6	Rear Compartment Panel	Mild Steel	Rear Compartment Floor Panel Sectioning
7	Rear End Panel	Mild Steel	Body Rear End Panel Replacement
8	Inner Bodyside	Mild Steel	• Body Side Inner Panel Sectioning • Rear Wheelhouse Panel Replacement
9	Rear Compartment Lower Rail	Ultra High Strength Dual Phase Steel	Rail Replacement - Rear Section
10	Rear Door Inner Reinforcement Beam	Ultra High Strength Steel	Not Serviced
11	Rear Outer Door Panel	Mild Steel	Rear Side Door Outer Panel Replacement
12	Front Outer Door Panel	Mild Steel	Front Side Door Outer Panel Replacement
13	Front Door Inner Reinforcement Beam	Ultra High Strength Steel	Not Serviced
14	Centre Pillar	• Ultra High Strength Steel • Dual Phase Steel	• Centre Pillar Reinforcement Replacement • Centre Pillar Inner Panel Replacement
15	Rocker Panel	Ultra High Strength Steel	• Rocker Inner Panel Replacement • Body Side Outer Panel Reinforcement Replacement
16	Hinge Pillar	High Strength Low Alloy Steel	Body Hinge Pillar Lower Reinforcement Replacement
17	Front Compartment Lower Rail	High Strength Low Alloy Steel	Front Rail Replacement
18	Headlamp Support Panel	Mild Steel	Headlamp Mount Panel Replacement
19	Upper Tie Bar Support	Mild Steel	Front End Upper Tie Bar Support Replacement

&#169© Copyright Chevrolet. All rights reserved

Front Bumper Impact Bar Replacement

Danger: Always perform the High Voltage Disabling procedure prior to servicing any High Voltage component or connection. Personal Protection Equipment (PPE) and proper procedures must be followed.

The High Voltage Disabling procedure will perform the following tasks:

- Identify how to disable high voltage.
- Identify how to test for the presence of high voltage.
- Identify condition under which high voltage is always present and personal protection equipment (PPE) and proper procedures must be followed.

Before working on any high voltage system, be sure to wear the following Personal Protection Equipment:

- Safety glasses with appropriate side shields when within 15 meters (50 feet) of the vehicle, either indoors or outdoors.
- Certified and up-to-date Class "0" Insulation gloves rated at 1000V with leather protectors.
  - Visually and functionally inspect the gloves before use.
  - Wear the Insulation gloves with leather protectors at all times when working with the high voltage battery assembly, whether the system is energised or not.

Failure to follow the procedures exactly as written may result in serious injury or death.

Removal Procedure

Warning : Refer to Approved Equipment for Collision Repair Warning in the Preface section.

Warning : Refer to Glass and Sheet Metal Handling Warning in the Preface section.

1. Disable the SIR system. Refer to SIR Disabling and Enabling .
2. Inspect the high voltage system. Refer to High Voltage System Inspection .
3. Remove all related panels and components.

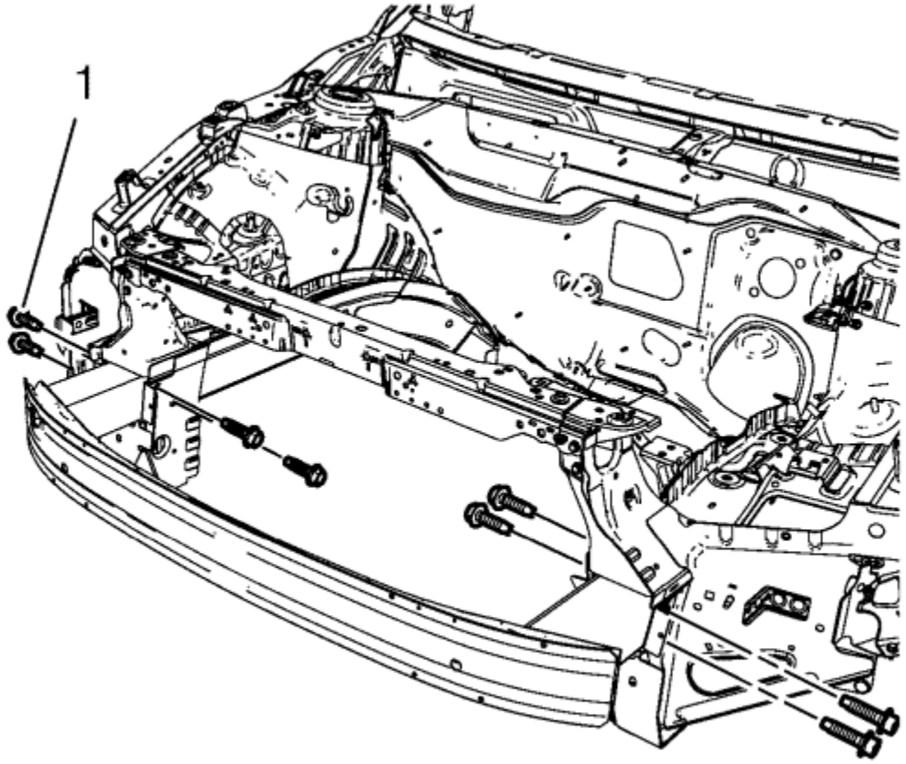

4. Remove the 8 front bumper impact bar bolts (1).

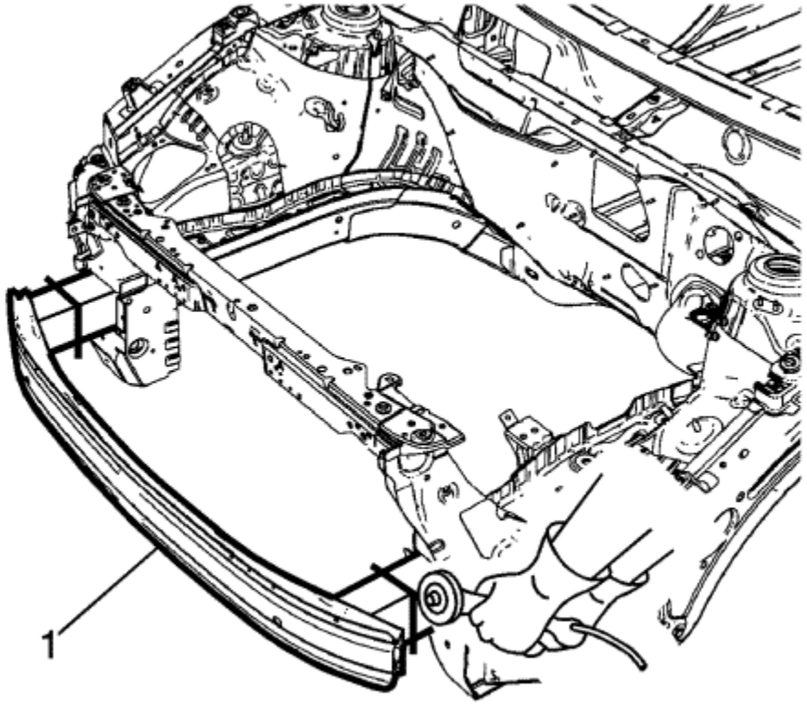

5. Cut the front bumper impact bar (1) left and right.
6. Locate and mark all factory welds.

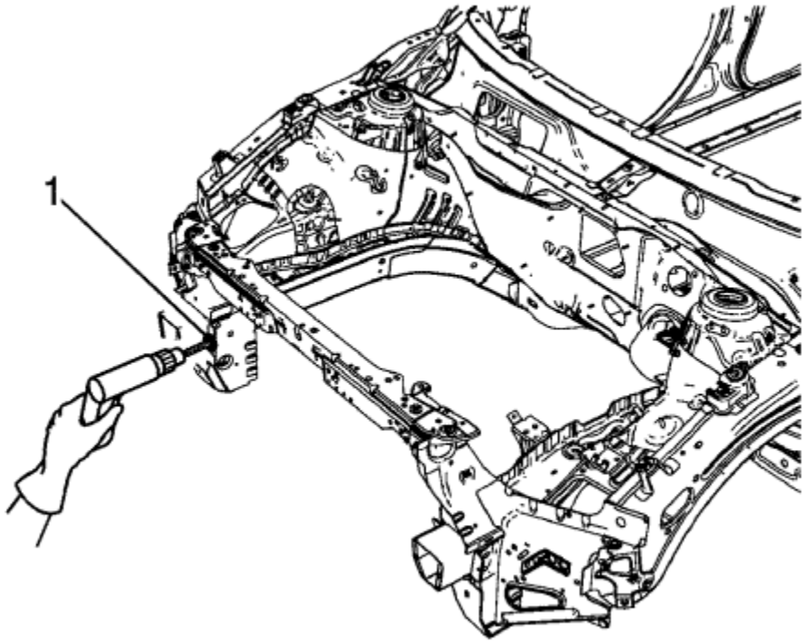

7. Drill all factory welds (1).

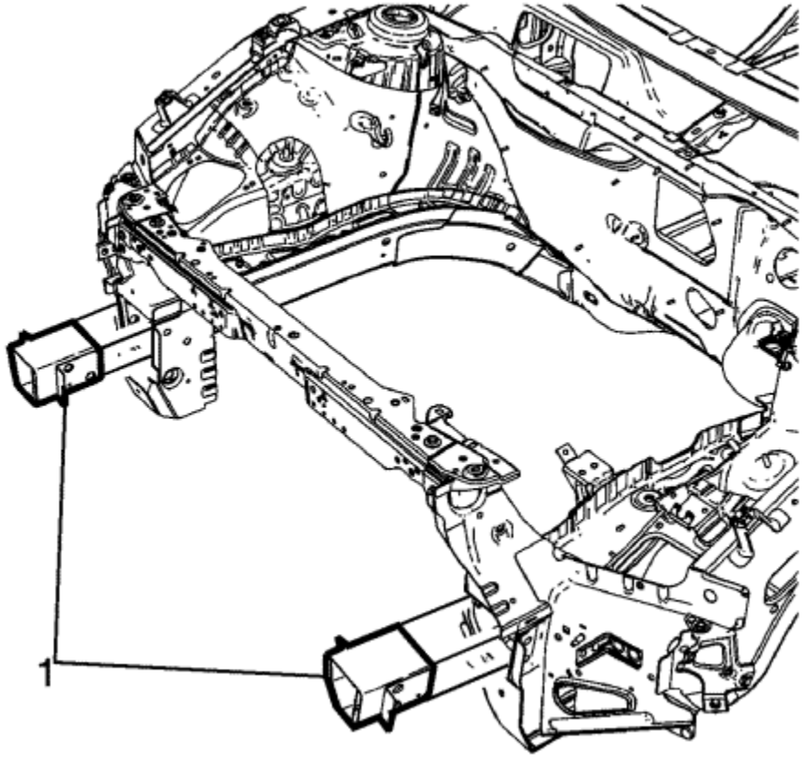

8. Remove the remaining parts of the front bumper impact bar (1).

Installation Procedure

Structural Rivet Method

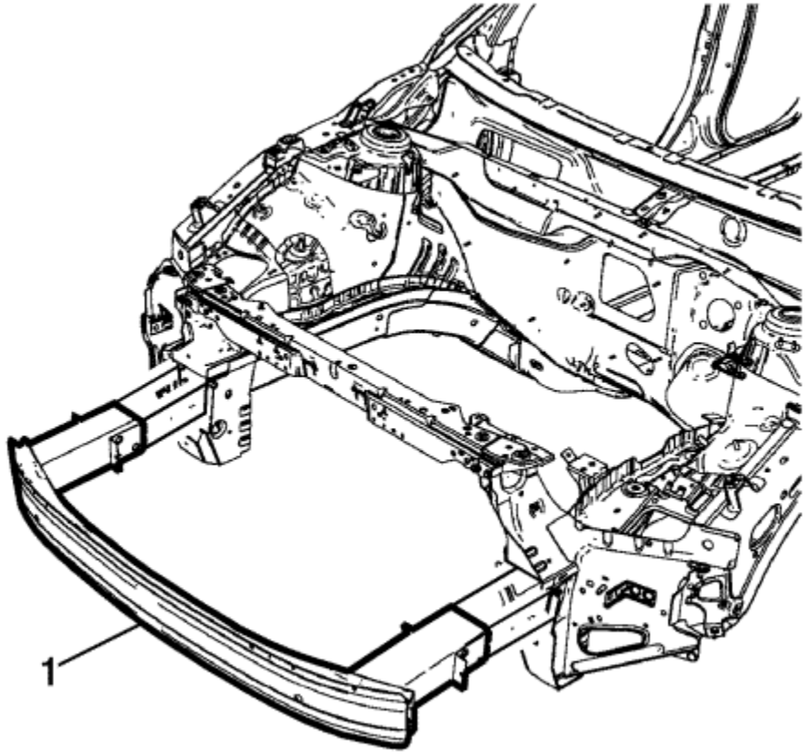

Note : The original bumper impact bar bracket to lower rail welds are required to maintain structural integrity of the bumper system. However, as an alternative to MIG plug-welding, structural rivets may be used as a one-to-one weld substitution.

1. Position the service front bumper impact bar (1) to the vehicle.

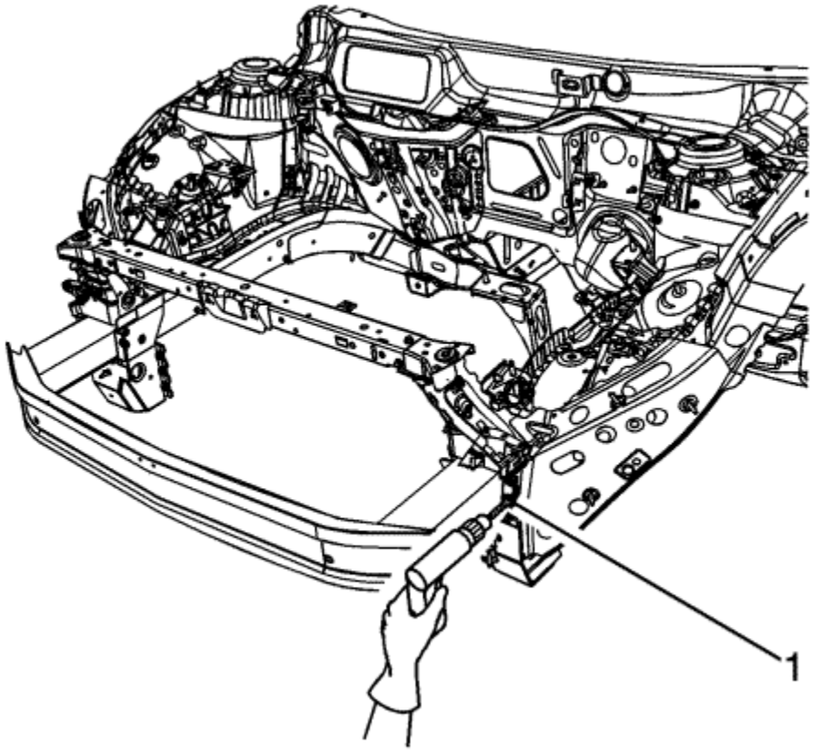

2. Drill 7 mm (17/64 in) holes (1) for the structural rivets as noted from the original spot weld locations.
3. Apply GM Super Lube or equivalent to drilled locations for corrosion protection.
4. Install structural rivets (1) - GM part number 11610245 or equivalent.

Caution : Refer to Fastener Caution in the Preface section.

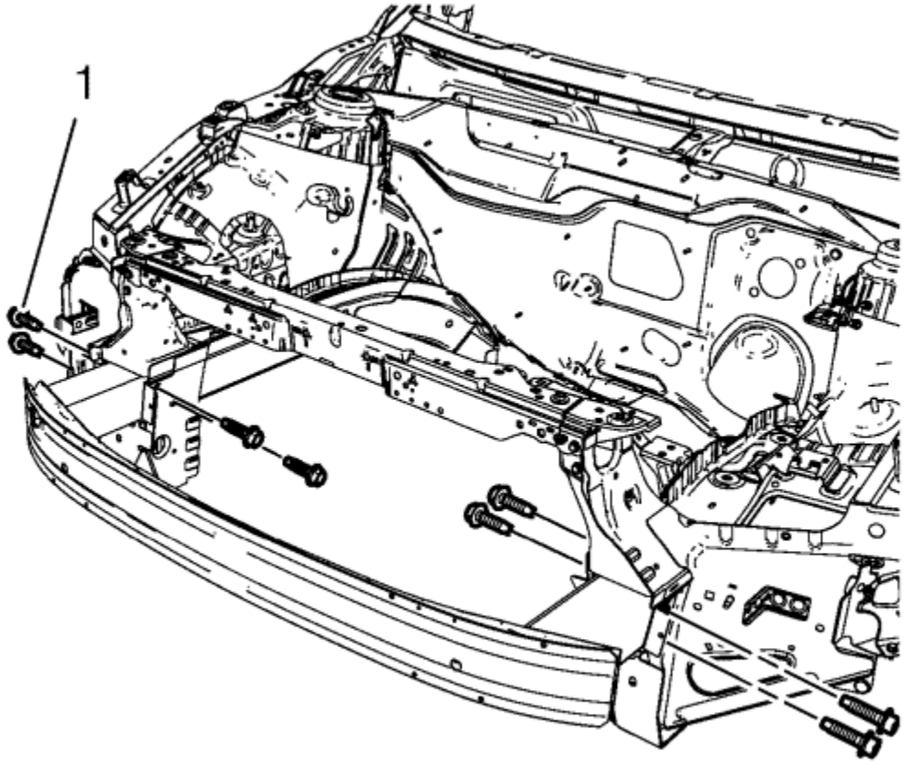

Note : Use only the original front bumper impact bar bolts. Replace bolts if damaged.

5. Install the 8 front bumper impact bar bolts (1) and tighten to **110 N·m (81 lb ft)**.
6. Install all related panels and components.
7. Enable the high voltage system. Refer to High Voltage Enabling .
8. Enable the SIR system. Refer to SIR Disabling and Enabling .

MIG Welding Method

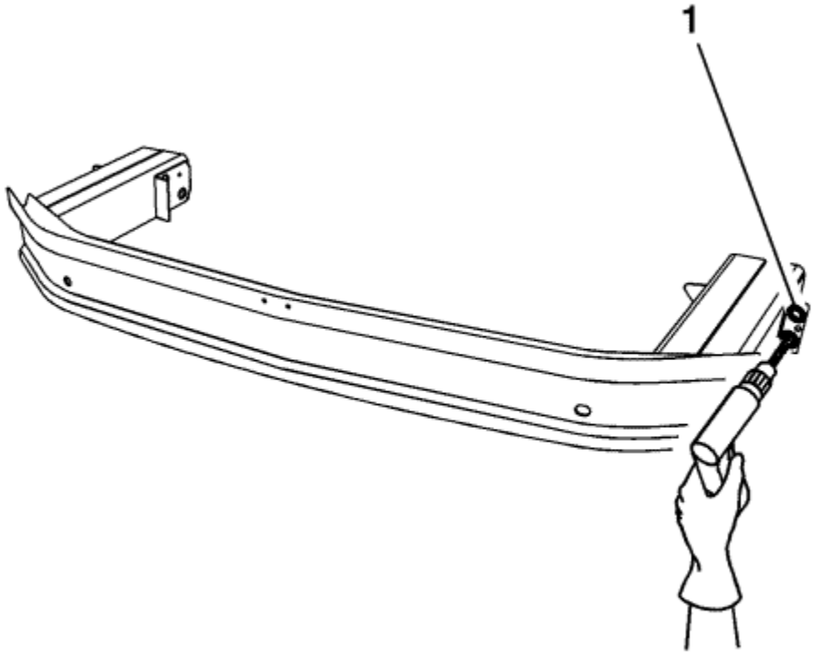

1. Drill 8 mm (5/16 in) plug weld holes (1) in the service part as necessary in the locations noted from the original panel.
2. Prepare all attachment surfaces as necessary.
3. Apply GM-approved weld-thru coating or equivalent to all mating surfaces. Refer to Anti-Corrosion Treatment and Repair .

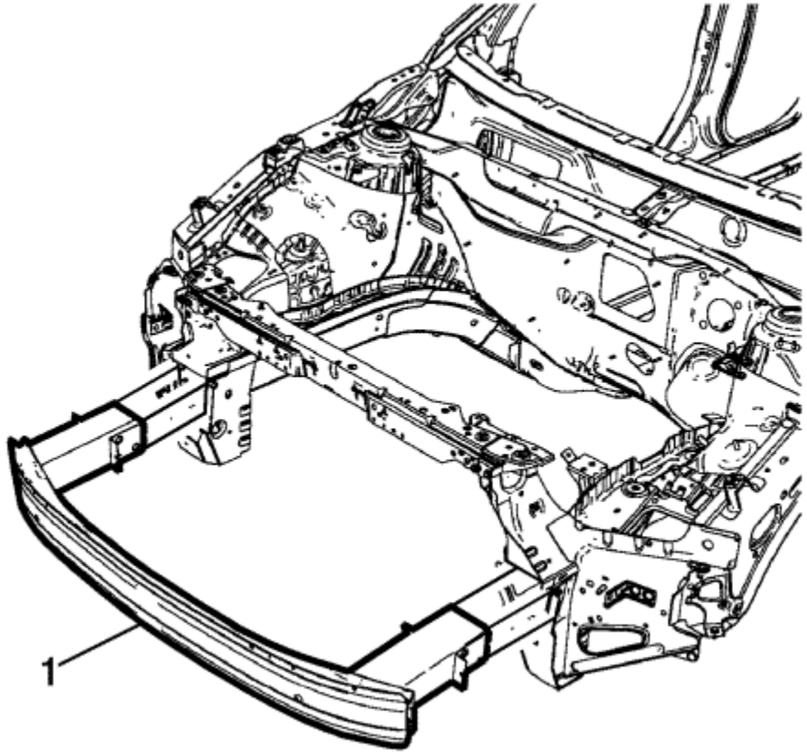

4. Position the bumper impact bar (1) to the vehicle.

   Caution : Refer to Fastener Caution in the Preface section.

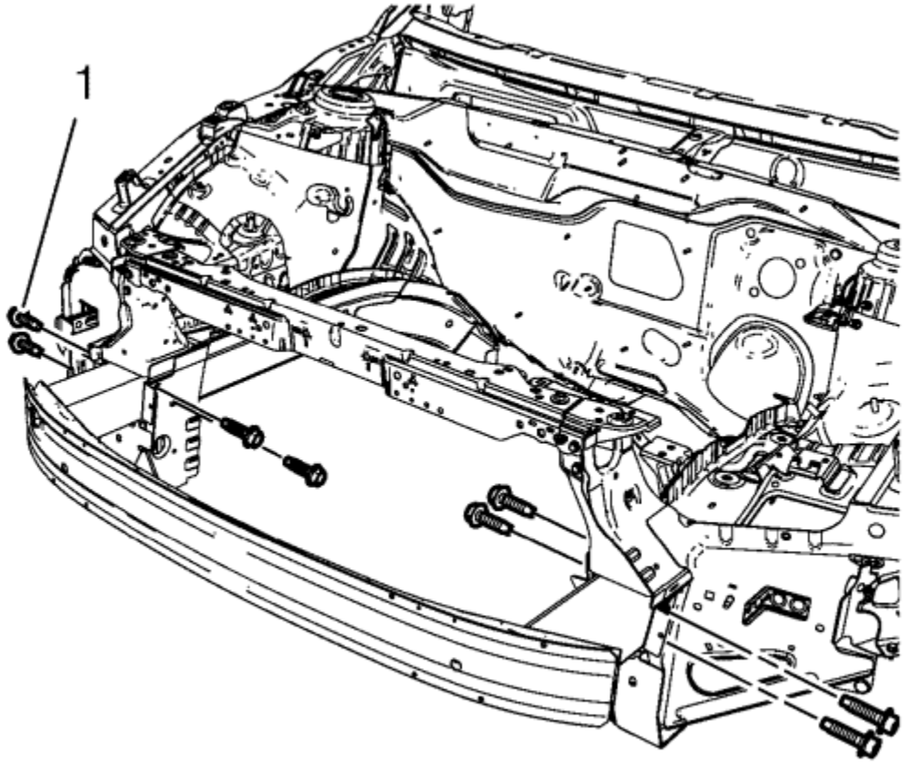

Note : Use only the original front bumper impact bar bolts. Replace bolts if damaged.

5. Install the 8 front bumper impact bar bolts (1) and tighten to **110 N·m (81 lb ft)**.

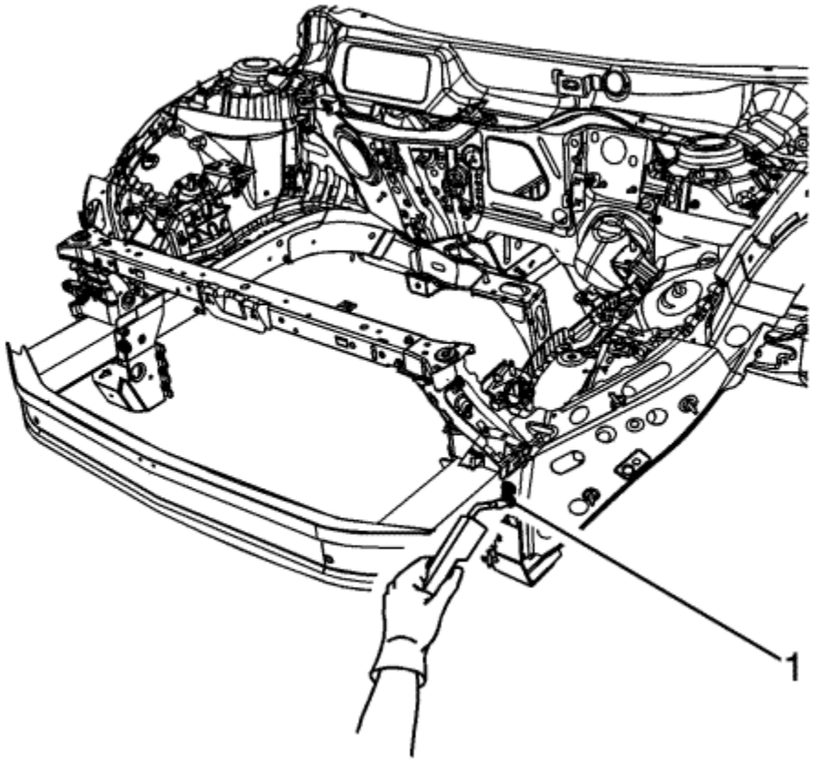

6. Plug weld (1) accordingly.
7. Clean and prepare all welded surfaces.
8. Apply the sealers and anti-corrosion materials to the repair area, as necessary. Refer to Anti-Corrosion Treatment and Repair .
9. Paint the repaired area. Refer to Basecoat/Clearcoat Paint Systems .
10. Install all related panels and components.
11. If disabled, enable the high voltage system. Refer to High Voltage Enabling .
12. Enable the SIR system. Refer to SIR Disabling and Enabling .

&#169© Copyright Chevrolet. All rights reserved

Headlamp Mount Panel Replacement

Danger: Always perform the High Voltage Disabling procedure prior to servicing any High Voltage component or connection. Personal Protection Equipment (PPE) and proper procedures must be followed.

The High Voltage Disabling procedure will perform the following tasks:

- Identify how to disable high voltage.
- Identify how to test for the presence of high voltage.
- Identify condition under which high voltage is always present and personal protection equipment (PPE) and proper procedures must be followed.

Before working on any high voltage system, be sure to wear the following Personal Protection Equipment:

- Safety glasses with appropriate side shields when within 15 meters (50 feet) of the vehicle, either indoors or outdoors.
- Certified and up-to-date Class "0" Insulation gloves rated at 1000V with leather protectors.
  - Visually and functionally inspect the gloves before use.
  - Wear the Insulation gloves with leather protectors at all times when working with the high voltage battery assembly, whether the system is energised or not.

Failure to follow the procedures exactly as written may result in serious injury or death.

Removal Procedure

Warning : Refer to Approved Equipment for Collision Repair Warning in the Preface section.

Warning : Refer to Glass and Sheet Metal Handling Warning in the Preface section.

1. Disable the SIR system. Refer to SIR Disabling and Enabling .
2. Inspect the high voltage system. Refer to High Voltage System Inspection .
3. Disable the high voltage system. Refer to High Voltage Disabling .
4. Remove all related panels and components.
5. Visually inspect the damage. Repair as much of the damage as possible.
6. Remove the sealers and anti-corrosion materials from the repair area, as necessary.

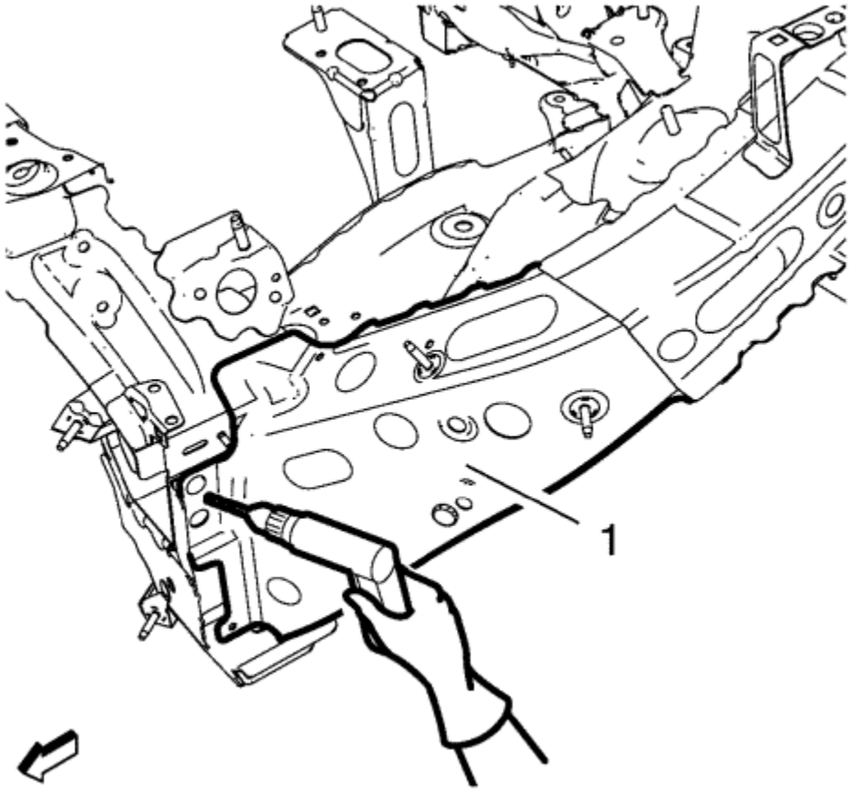

7. Locate and mark all the necessary factory welds of the headlamp mount panel (1).
8. Drill all factory welds. Note the number and location of welds for installation of the service assembly.

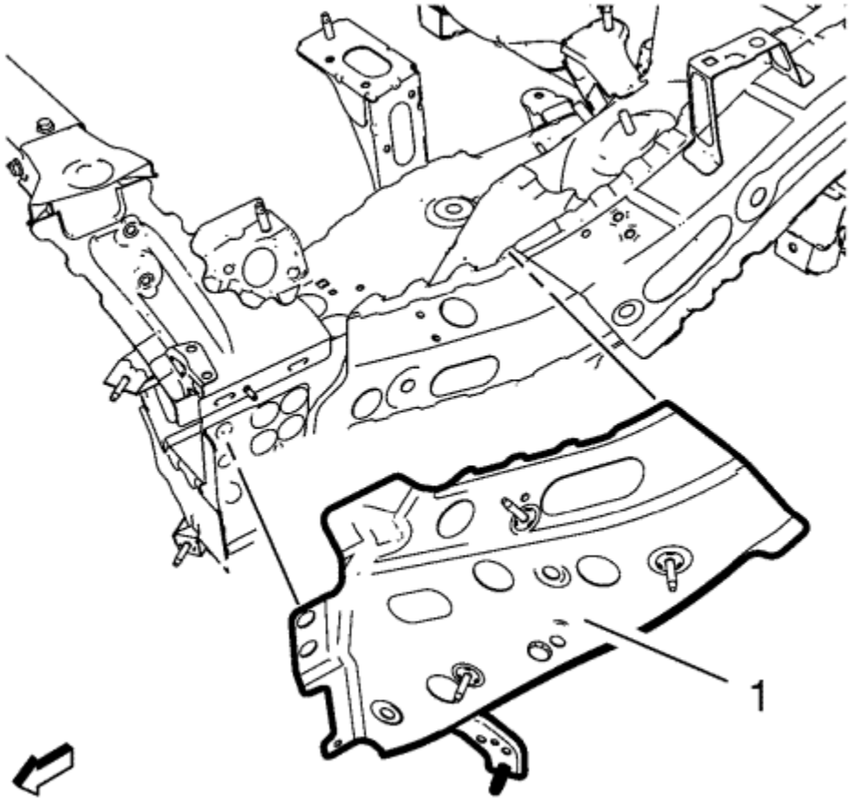

9. Remove the damaged headlamp mount panel (1).

Installation Procedure

1. Prepare all mating surfaces as necessary.
2. Clean and prepare the attaching surfaces for spot welding.

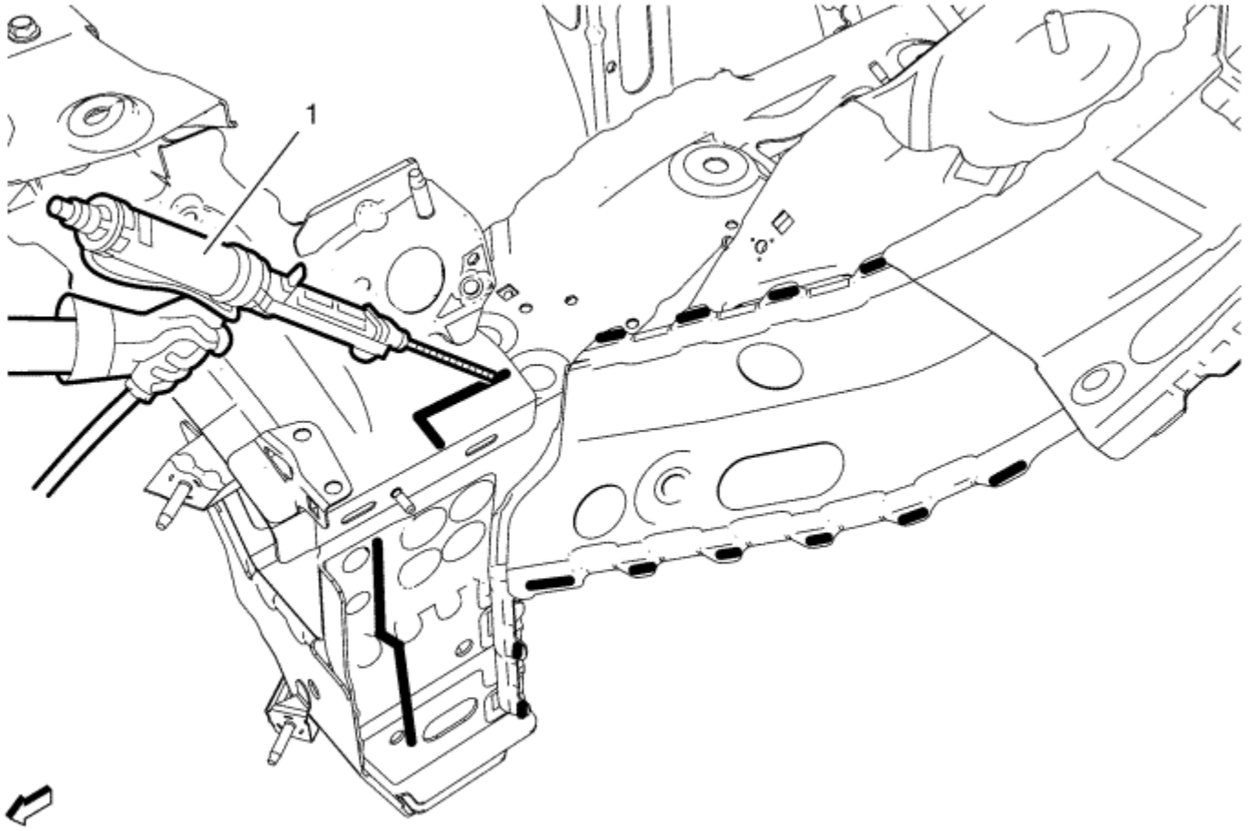

3. Apply structural adhesive (1) the attaching surfaces of the headlamp mount panel.

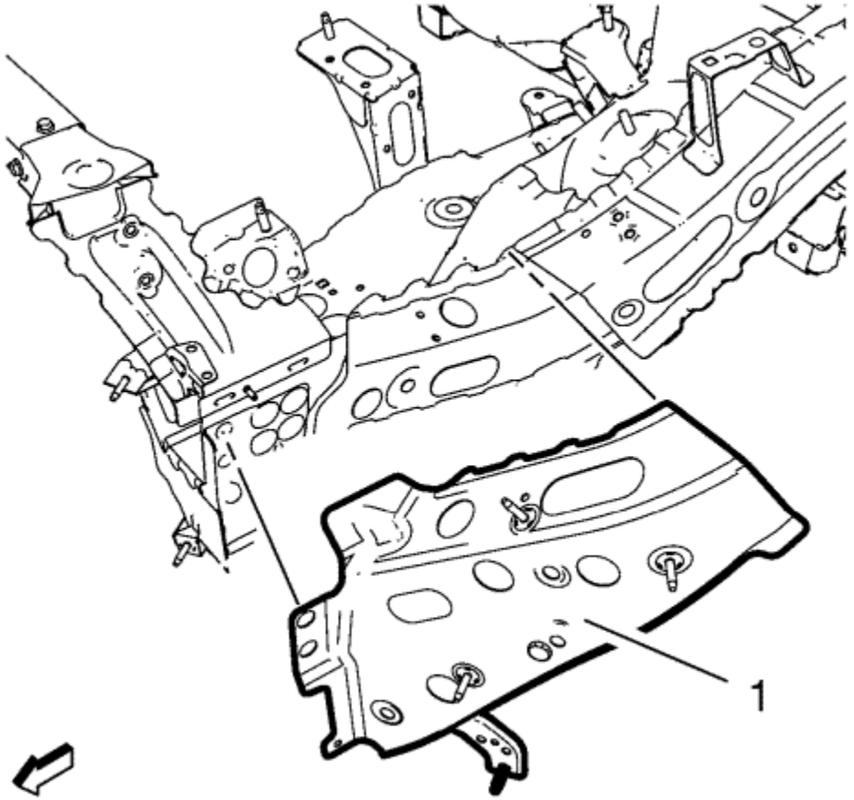

4. Position the headlamp mount panel (1) on the vehicle.
5. Verify the fit of the headlamp mount panel.
6. Clamp the headlamp mount panel into position.

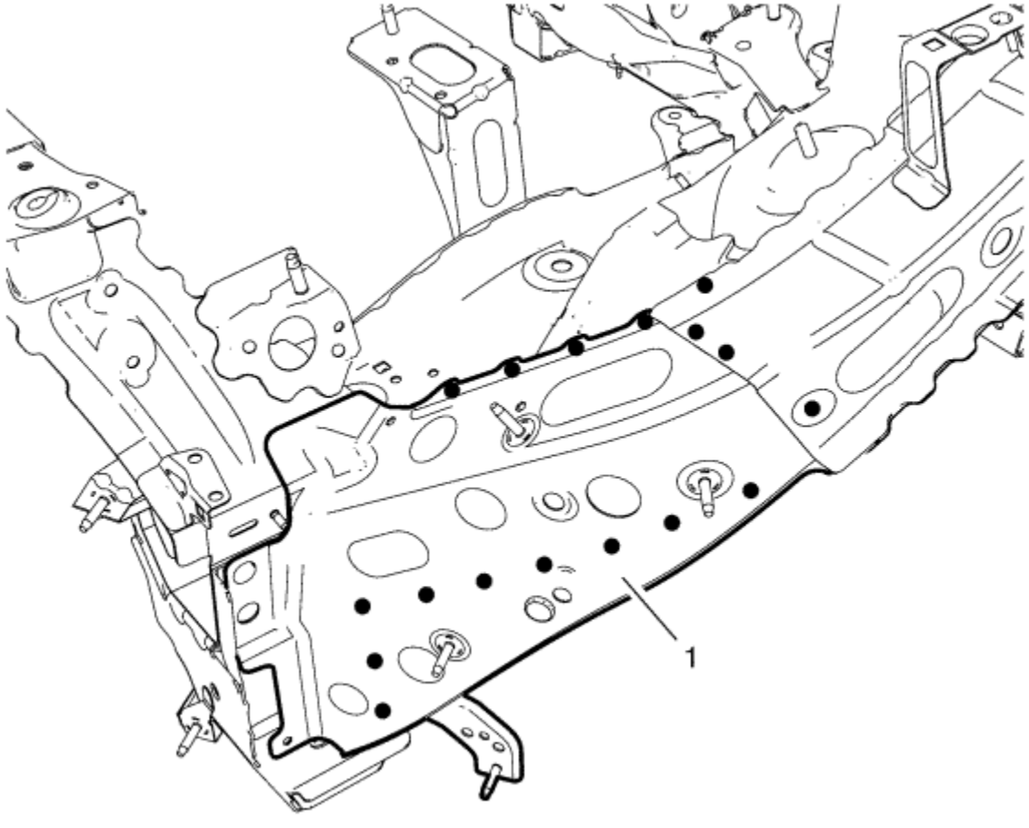

7. Spot weld the headlamp mount panel (1) with 17 spot welds accordingly.
8. Apply the sealers and anti-corrosion materials to the repair area as necessary.
9. Paint the repaired area.
10. Install all related panels and components.
11. Enable the high voltage system. Refer to High Voltage Enabling .
12. Enable the SIR system. Refer to SIR Disabling and Enabling .

&#169© Copyright Chevrolet. All rights reserved

Front End Upper Tie Bar Support Replacement

Removal Procedure

Warning : Refer to Approved Equipment for Collision Repair Warning in the Preface section.

Warning : Refer to Glass and Sheet Metal Handling Warning in the Preface section.

1. Disable the SIR system. Refer to SIR Disabling and Enabling .

   Danger: Always perform the High Voltage Disabling procedure prior to servicing any High Voltage component or connection. Personal Protection Equipment (PPE) and proper procedures must be followed.

   The High Voltage Disabling procedure will perform the following tasks:

   - Identify how to disable high voltage.
   - Identify how to test for the presence of high voltage.
   - Identify condition under which high voltage is always present and personal protection equipment (PPE) and proper procedures must be followed.

   Failure to follow the procedures exactly as written may result in serious injury or death.

2. Disable the high voltage system. Refer to High Voltage Disabling .
3. Remove all related panels and components.
4. Visually inspect the damage. Repair as much of the damage as possible.
5. Remove the sealers and anti-corrosion materials from the repair area as necessary.

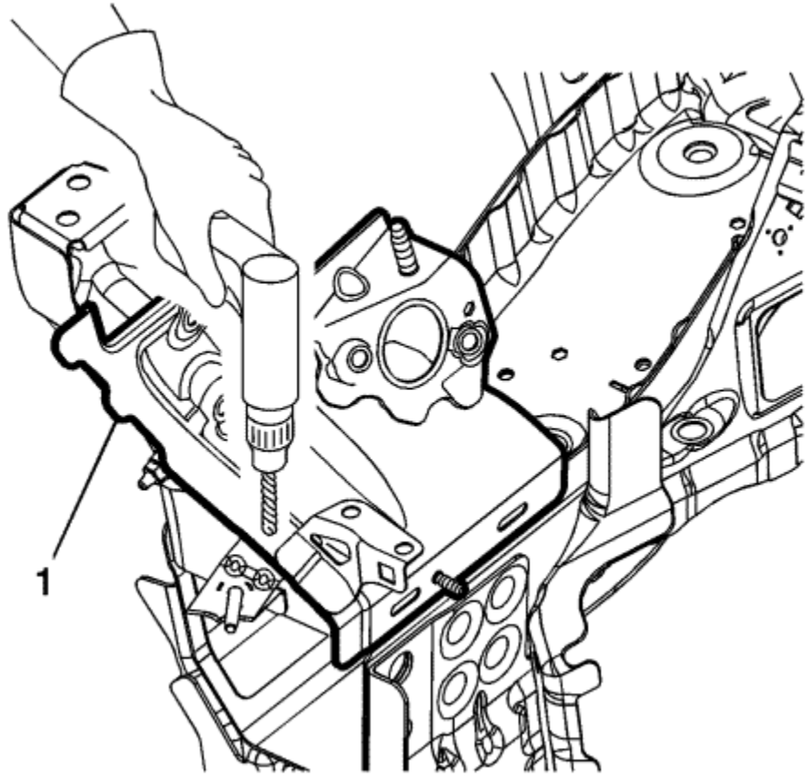

6. Locate and mark all the necessary factory welds of the front end sheet metal cross panel reinforcement (1).
7. Drill and grind all factory welds. Note the number and location of welds for installation of the service assembly.

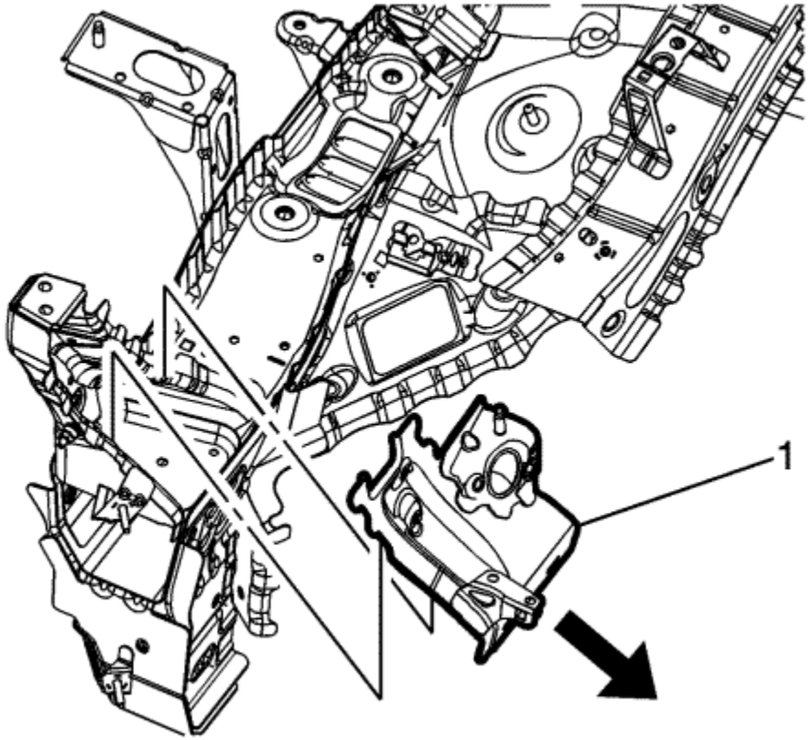

8. Remove the front end sheet metal cross panel reinforcement (1).

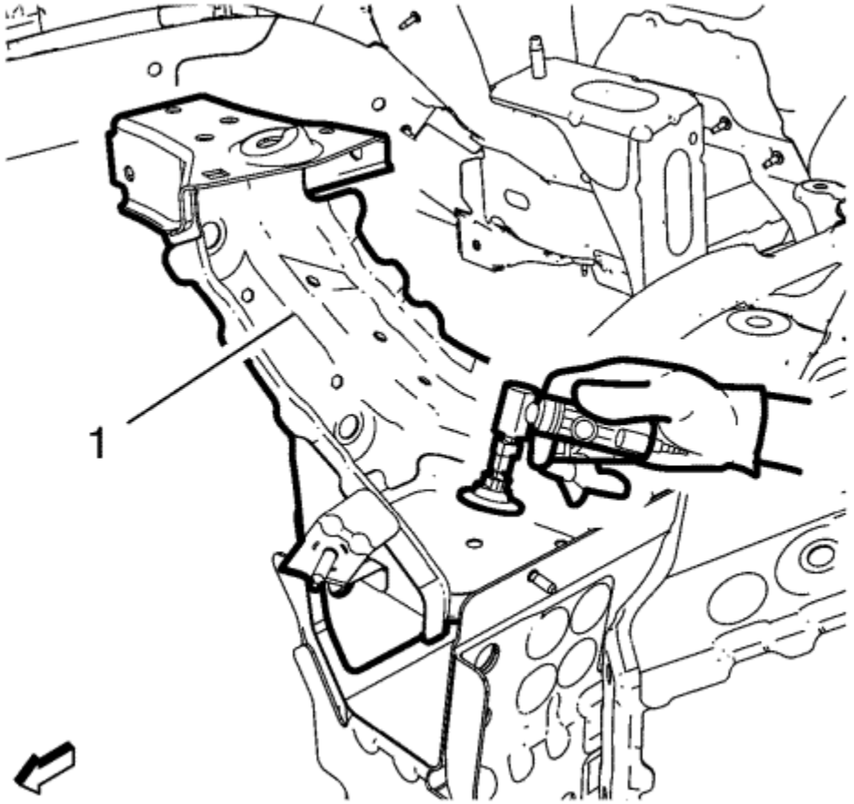

9. Grind the factory welds of the front end upper tie bar support (1) from the inside.

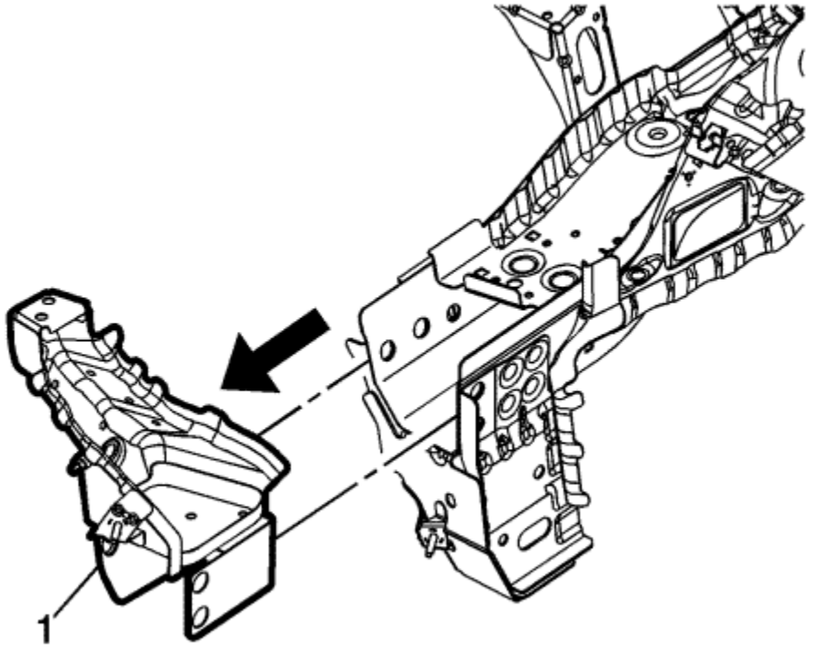

10. Remove the front end upper tie bar support (1).

Installation Procedure

1. Prepare all mating surfaces as necessary.
2. Clean and prepare the attaching surfaces for spot welding and brazing.

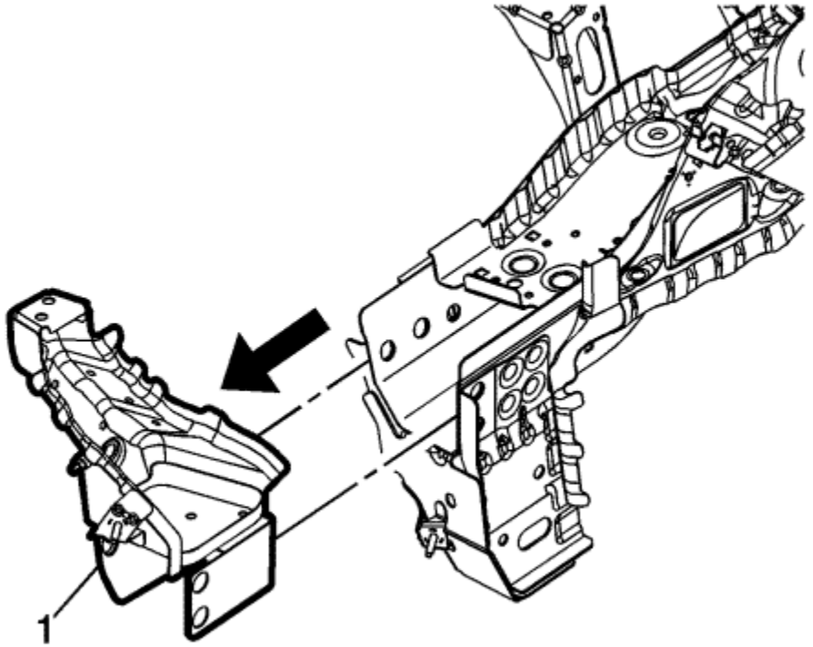

3. Position the front end upper tie bar support (1) on the vehicle.
4. Verify the fit of the front end upper tie bar support.
5. Clamp the front end upper tie bar support into position.

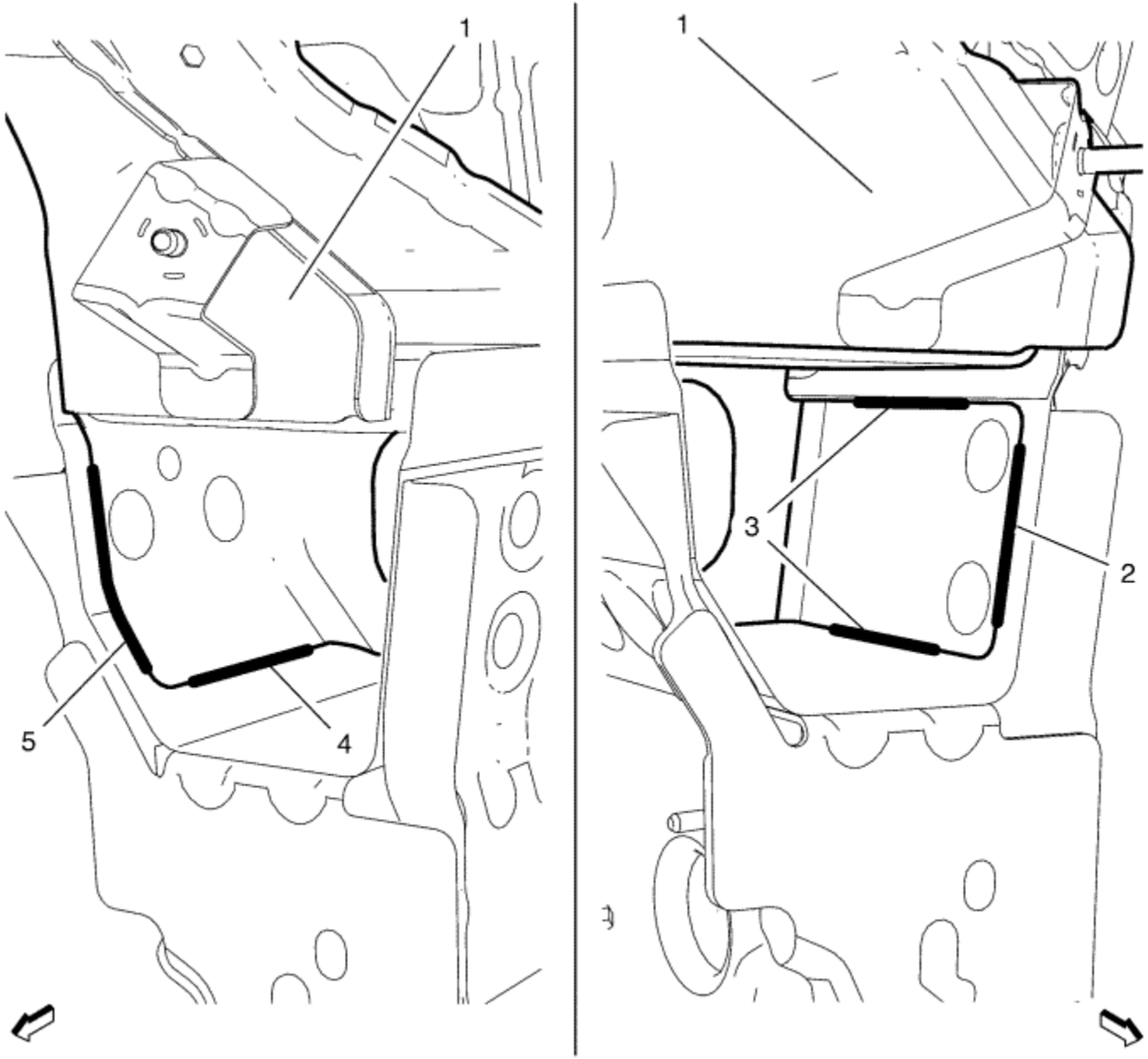

6. Braze the front end upper tie bar support - left side (1) accordingly.
   6.1. Brace line (2) - **50 mm**
   6.2. Brace line (3) - **70 mm**
   6.3. Brace line (4) - **60 mm**
   6.4. Brace line (5) - **60 mm**

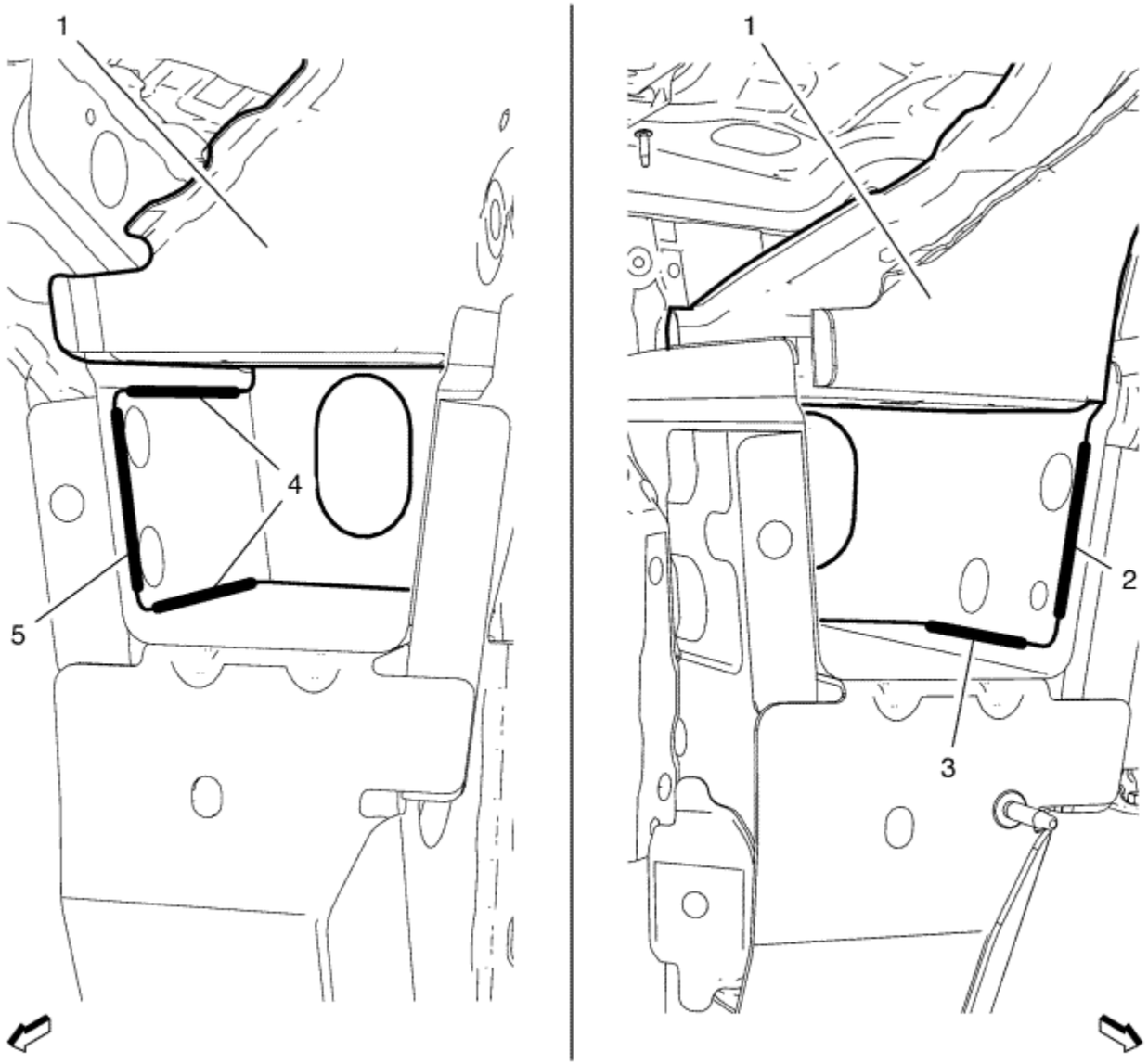

7. Braze the front end upper tie bar support - right side (1) accordingly.
   7.1. Brace line (2) - **60 mm**
   7.2. Brace line (3) - **60 mm**
   7.3. Brace line (4) - **70 mm**
   7.4. Brace line (5) - **50 mm**

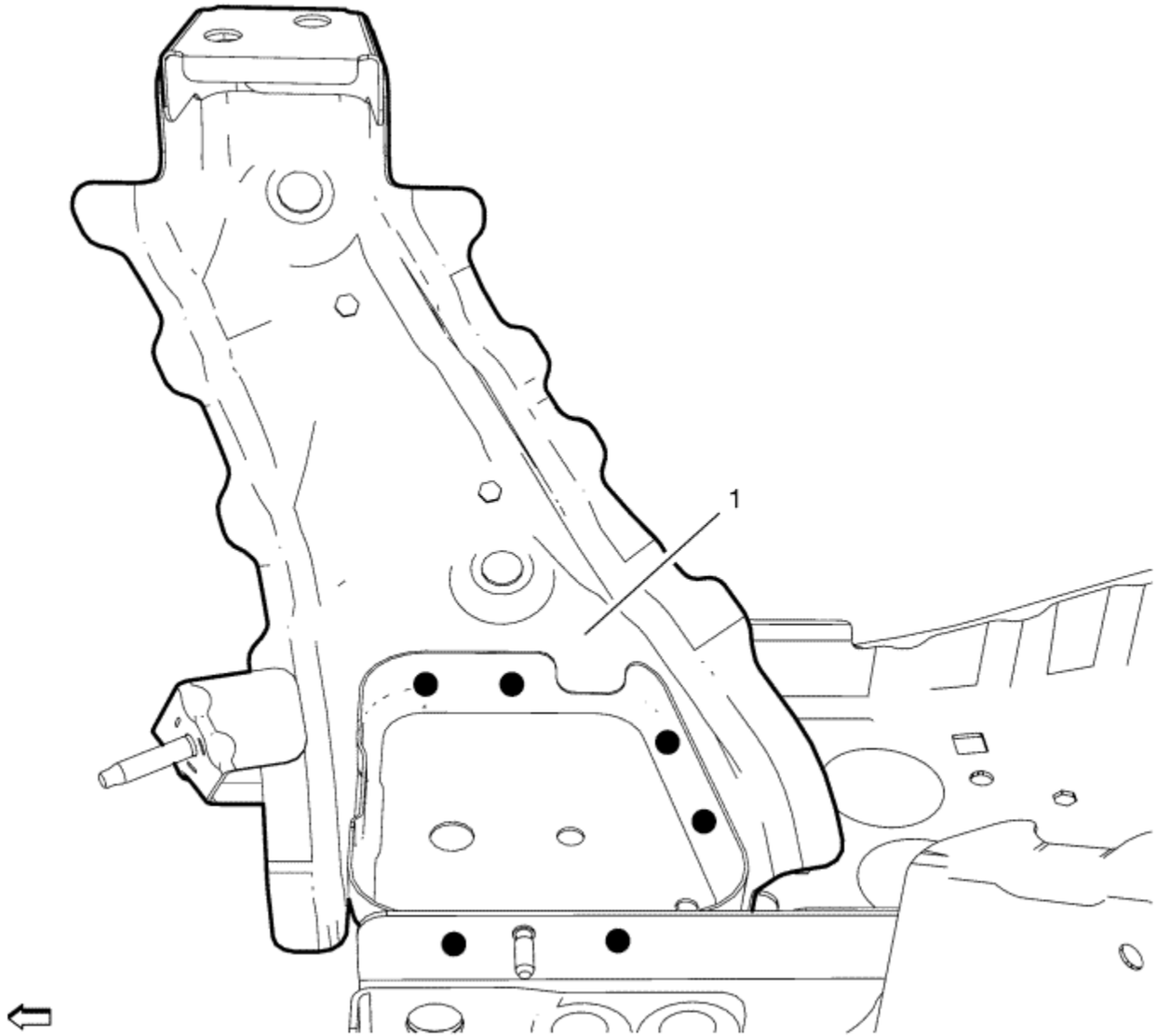

8. Spot weld the front end upper tie bar support (1) with 6 spot welds accordingly.

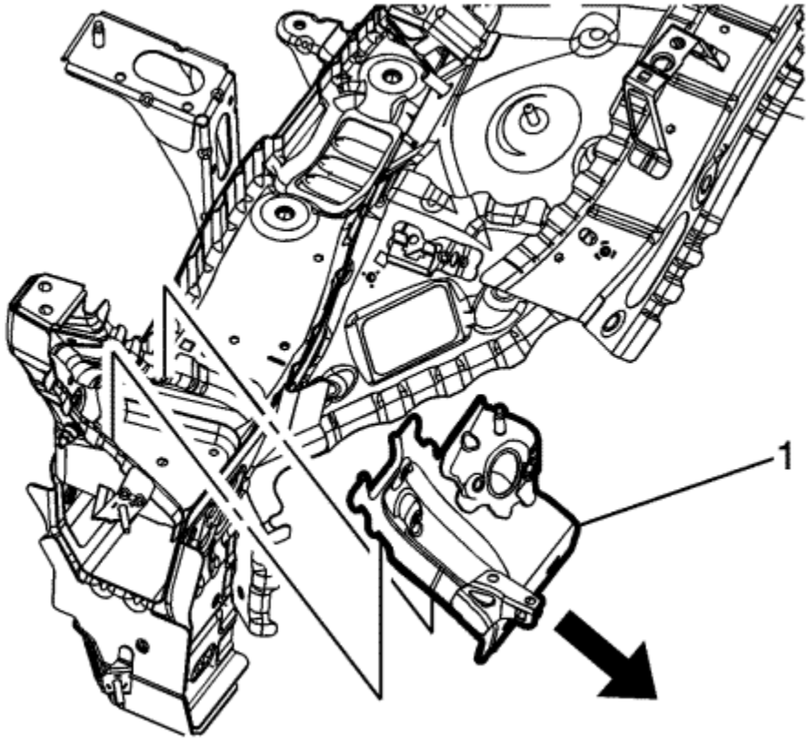

9. Position the front end sheet metal cross panel reinforcement (1) on the vehicle.
10. Verify the fit of the front end sheet metal cross panel reinforcement.
11. Clamp the front end sheet metal cross panel reinforcement into position.

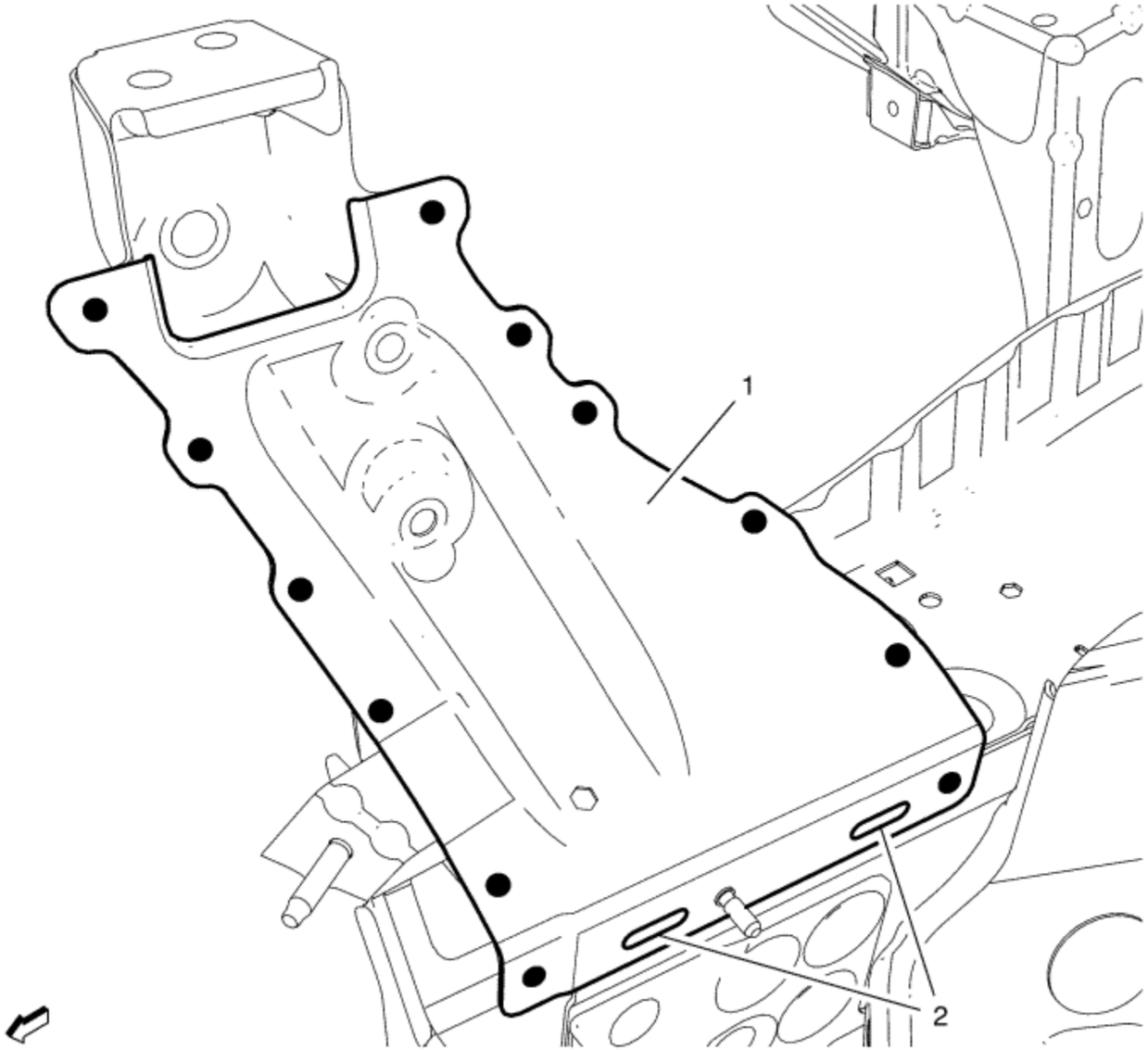

12. Spot weld the front end sheet metal cross panel reinforcement (1) with 12 spot welds accordingly.
13. Use the factory slots (2) for brazing.

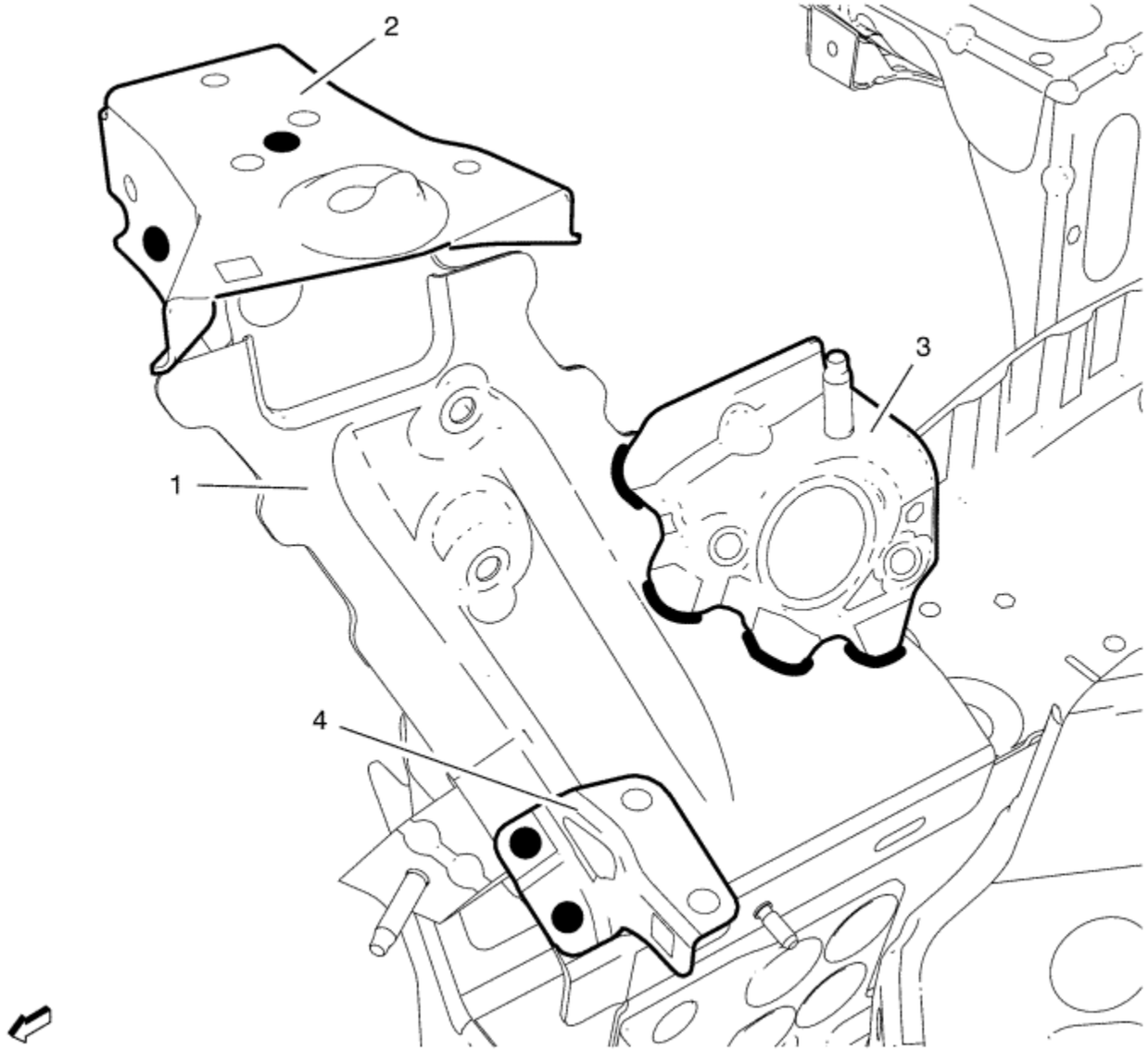

14. Install the brackets.
    14.1. Bonnet front bumper bracket (2) - 3 spot welds.

    Note: This applies to the left side ONLY.

    14.2. Drive motor power inverter bracket (3) - 4 **10 mm** braze edge seams
    14.3. Headlamp bracket (4) - 2 spot welds.

15. Apply the sealers and anti-corrosion materials to the repair area as necessary.
16. Paint the repaired area.
17. Install all related panels and components.
18. Enable the high voltage system. Refer to High Voltage Enabling .
19. Enable the SIR system. Refer to SIR Disabling and Enabling .

&#169© Copyright Chevrolet. All rights reserved

Front Wheelhouse Front Panel Replacement

Removal Procedure

Warning : Refer to Approved Equipment for Collision Repair Warning in the Preface section.

Warning : Refer to Glass and Sheet Metal Handling Warning in the Preface section.

1. Disable the SIR system. Refer to SIR Disabling and Enabling .

   Danger: Always perform the High Voltage Disabling procedure prior to servicing any High Voltage component or connection. Personal Protection Equipment (PPE) and proper procedures must be followed.

   The High Voltage Disabling procedure will perform the following tasks:

   - Identify how to disable high voltage.
   - Identify how to test for the presence of high voltage.
   - Identify condition under which high voltage is always present and personal protection equipment (PPE) and proper procedures must be followed.

   Failure to follow the procedures exactly as written may result in serious injury or death.

2. Disable the high voltage system. Refer to High Voltage Disabling .
3. Remove all related panels and components.
4. Visually inspect the damage. Repair as much of the damage as possible.
5. Remove the sealers and anti-corrosion materials from the repair area as necessary.

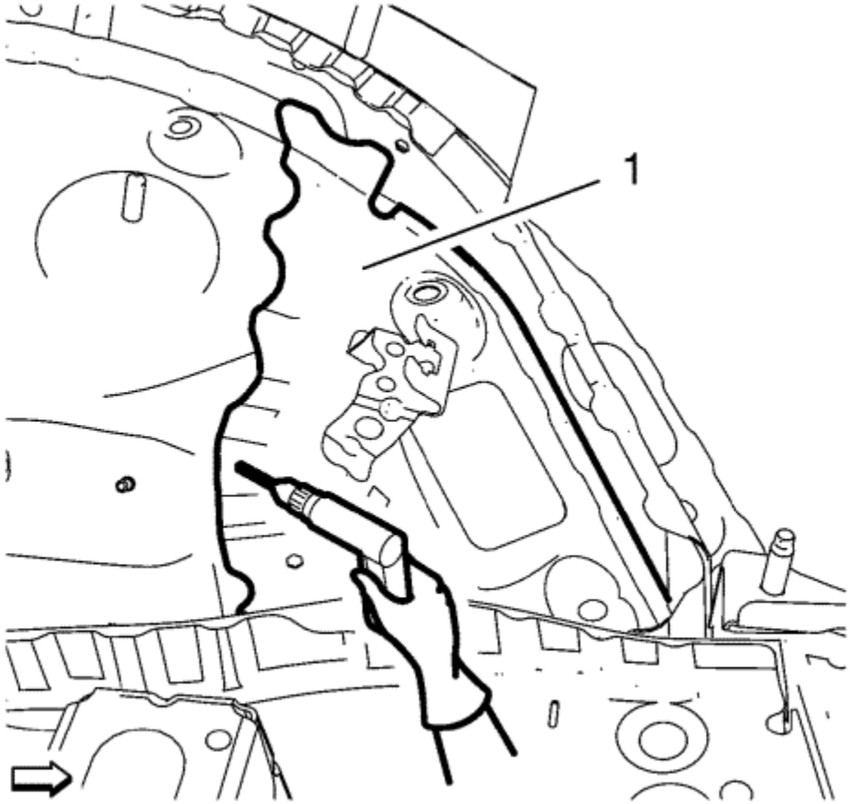

6. Locate and mark all the necessary factory welds of the front wheelhouse front panel (1).
7. Drill all factory welds. Note the number and location of welds for installation of the service assembly.

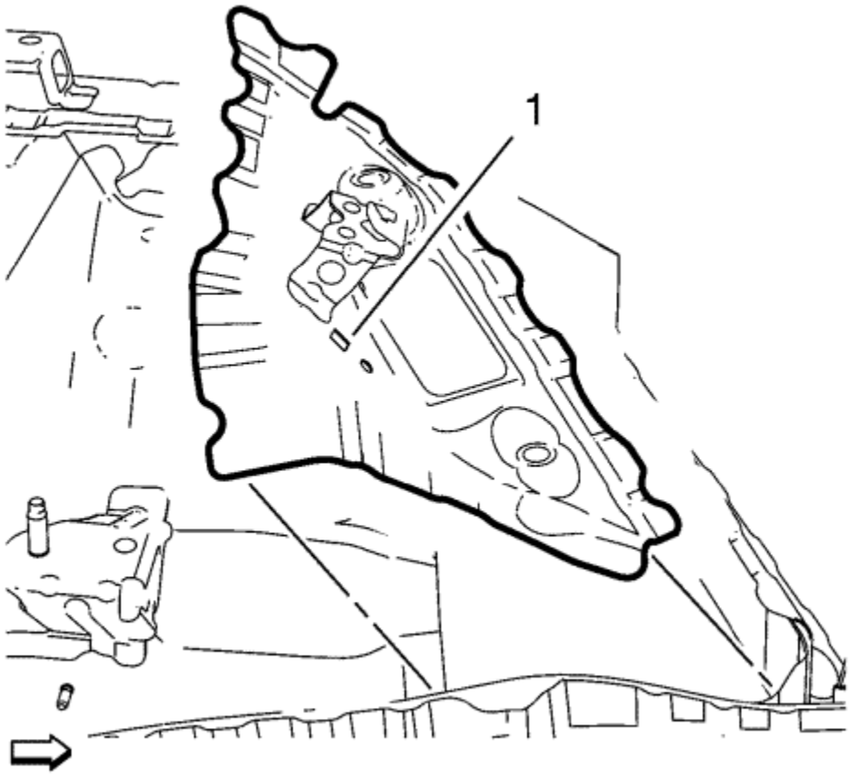

8. Remove the damaged front wheelhouse front panel (1).

Installation Procedure

1. Prepare all mating surfaces as necessary.
2. Clean and prepare the attaching surfaces for spot welding.

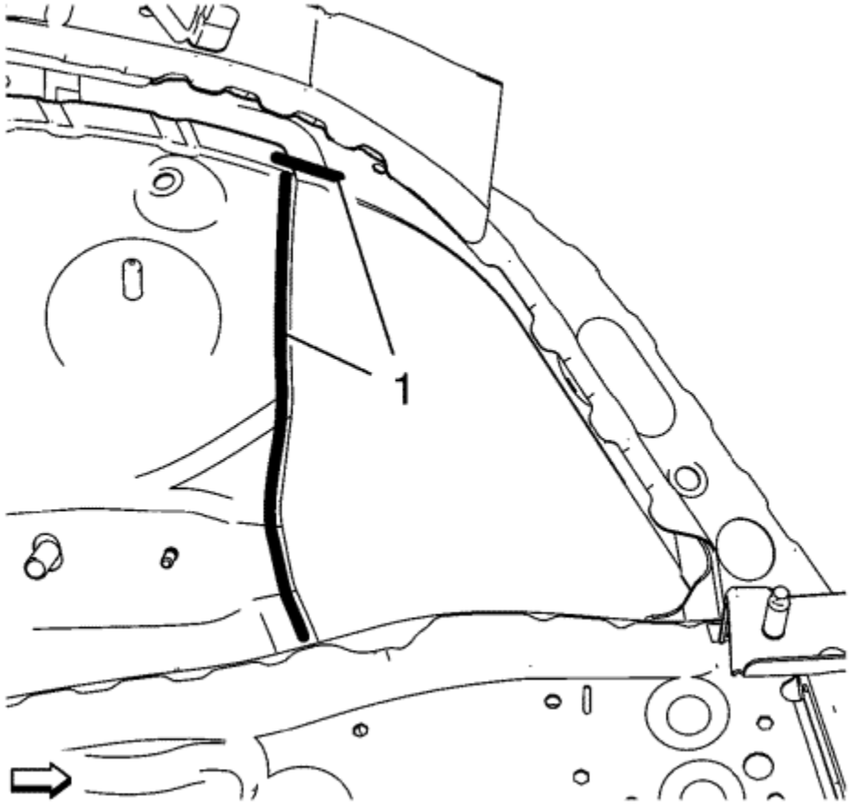

3. Apply structural adhesive (1).

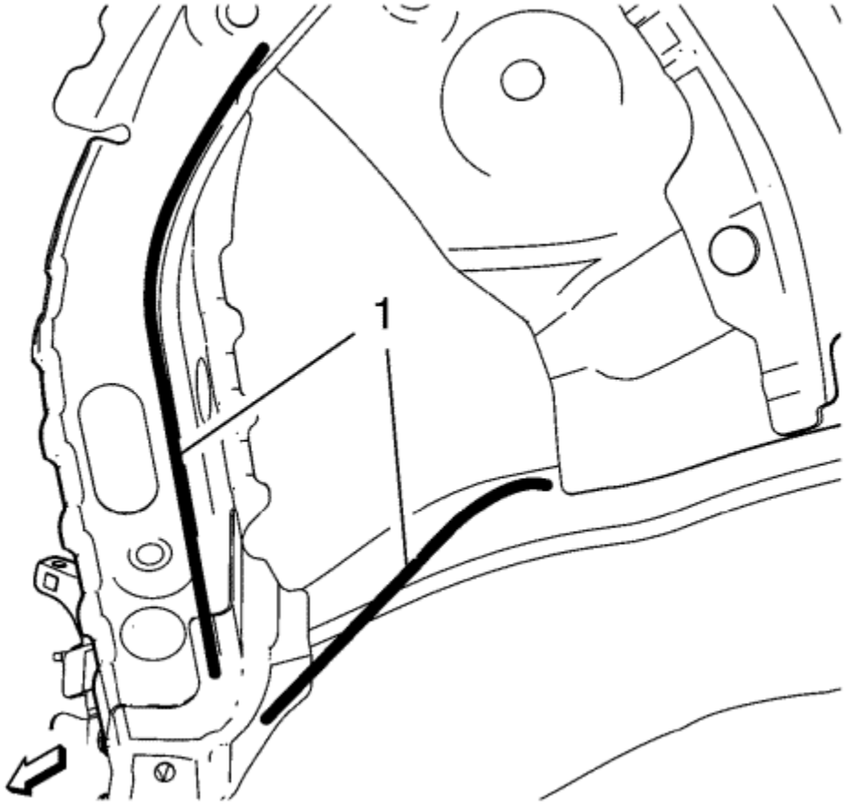

4. Apply structural adhesive (1).

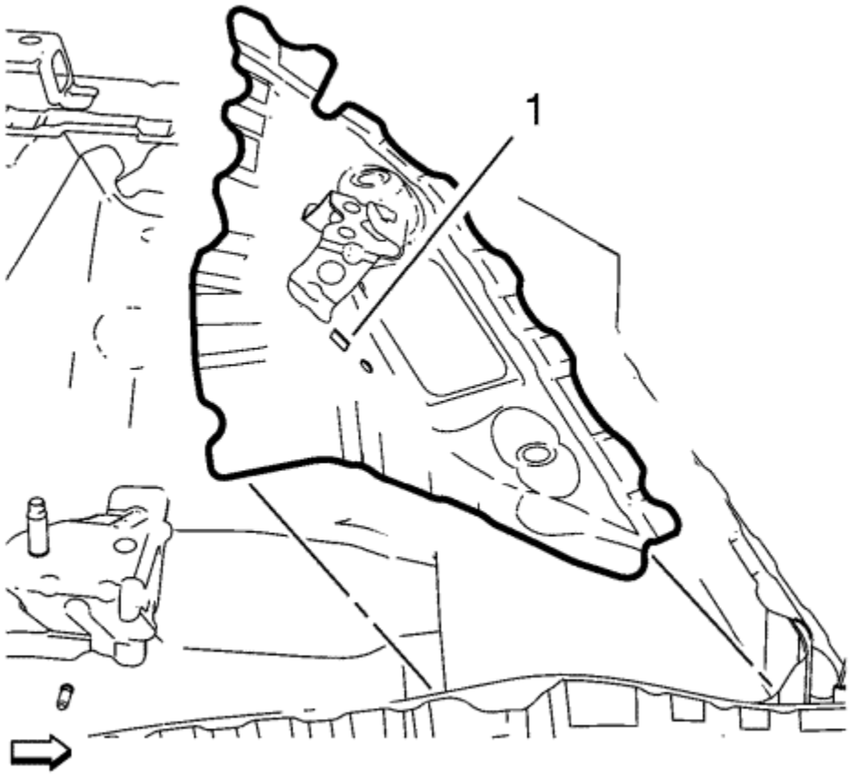

5. Position the front wheelhouse front panel (1) on the vehicle.
6. Verify the fit of the front wheelhouse front panel.
7. Clamp the front wheelhouse front panel into position.

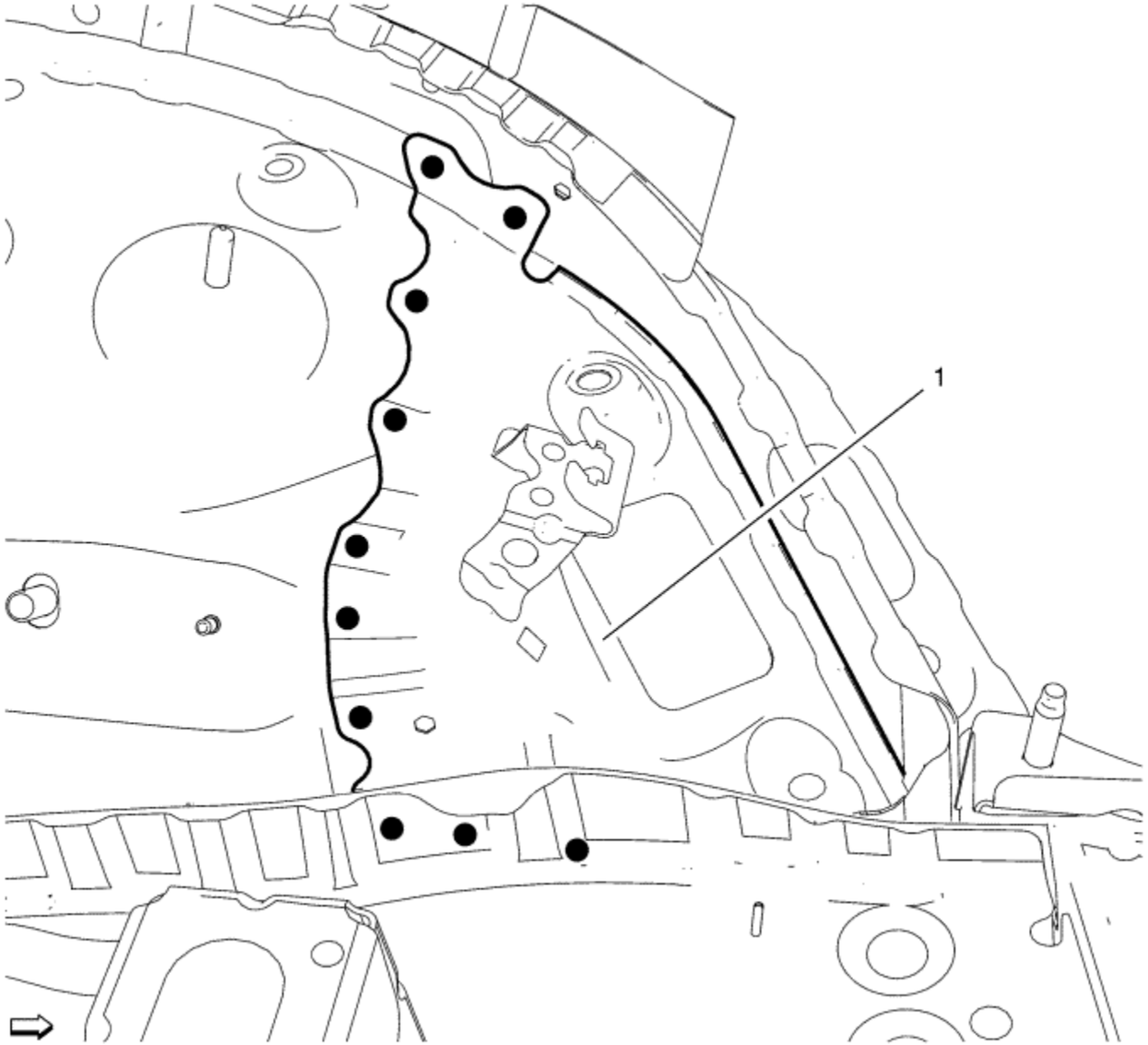

8. Spot weld the front wheelhouse front panel (1) with 10 spot welds accordingly.

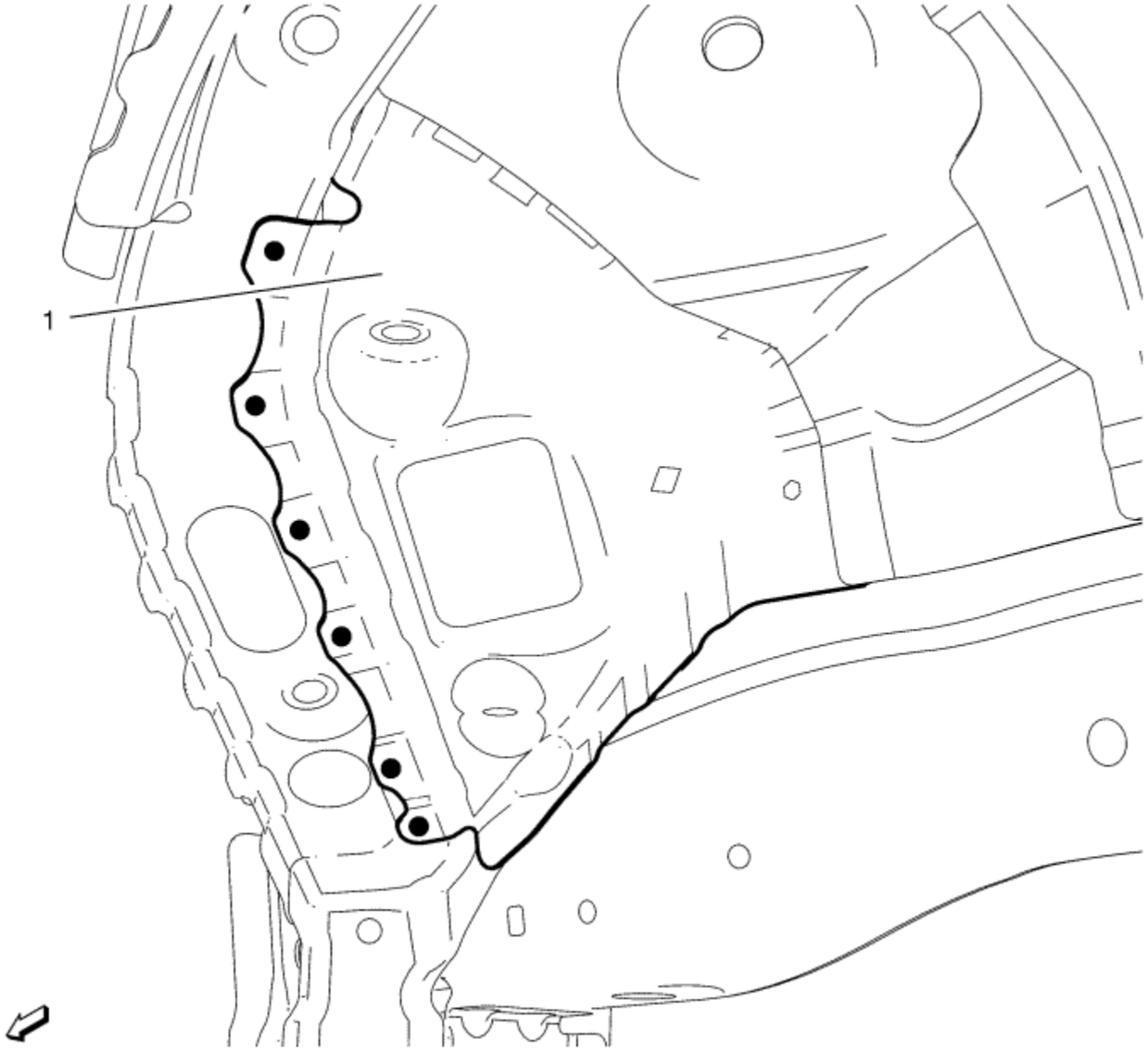

9. Spot weld the front wheelhouse front panel (1) with 6 spot welds accordingly.
10. Apply the sealers and anti-corrosion materials to the repair area as necessary.
11. Paint the repaired area.
12. Install all related panels and components.
13. Enable the high voltage system. Refer to High Voltage Enabling .
14. Enable the SIR system. Refer to SIR Disabling and Enabling .

&#169© Copyright Chevrolet. All rights reserved

Front Wheel housing Panel Replacement

Danger: Always perform the High Voltage Disabling procedure prior to servicing any High Voltage component or connection. Personal Protection Equipment (PPE) and proper procedures must be followed.

The High Voltage Disabling procedure will perform the following tasks:

- Identify how to disable high voltage.
- Identify how to test for the presence of high voltage.
- Identify condition under which high voltage is always present and personal protection equipment (PPE) and proper procedures must be followed.

Before working on any high voltage system, be sure to wear the following Personal Protection Equipment:

- Safety glasses with appropriate side shields when within 15 meters (50 feet) of the vehicle, either indoors or outdoors.
- Certified and up-to-date Class "0" Insulation gloves rated at 1000V with leather protectors.
  - Visually and functionally inspect the gloves before use.
  - Wear the Insulation gloves with leather protectors at all times when working with the high voltage battery assembly, whether the system is energised or not.

Failure to follow the procedures exactly as written may result in serious injury or death.

Removal Procedure

Warning : Refer to Approved Equipment for Collision Repair Warning in the Preface section.

Warning : Refer to Glass and Sheet Metal Handling Warning in the Preface section.

1. Disable the SIR system. Refer to SIR Disabling and Enabling .
2. Inspect the high voltage system. Refer to High Voltage System Inspection .
3. Remove all related panels and components.
4. Visually inspect the damage. Repair as much of the damage as possible.
5. Remove the sealers and anti-corrosion materials from the repair area, as necessary. Refer to Anti-Corrosion Treatment and Repair .

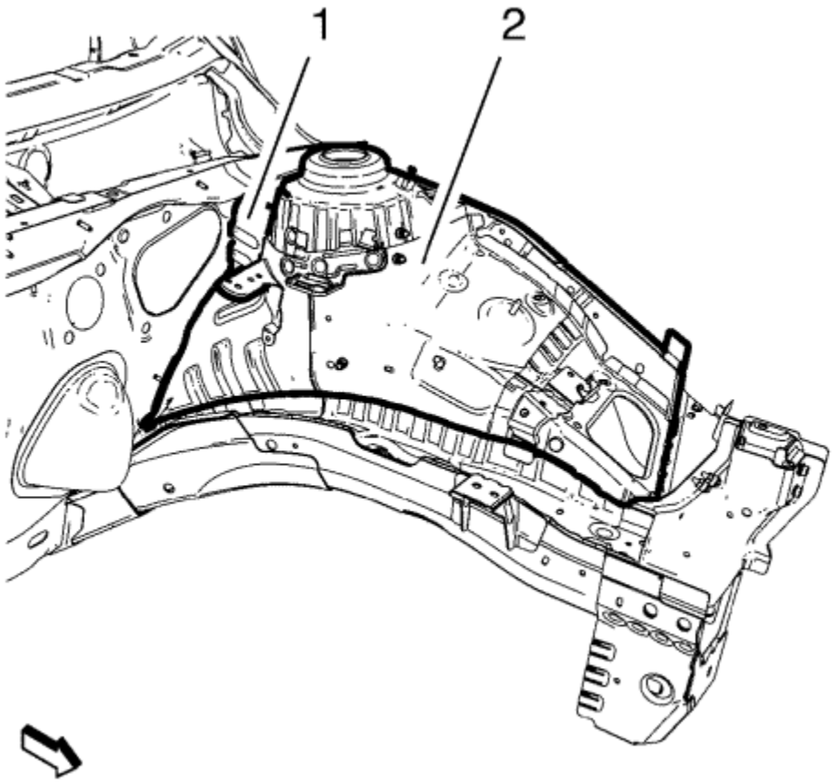

Note : Front wheelhouse rear panel brace (1) remains to the body.

6. Locate and mark all the necessary factory welds of the front wheelhouse panel (2).

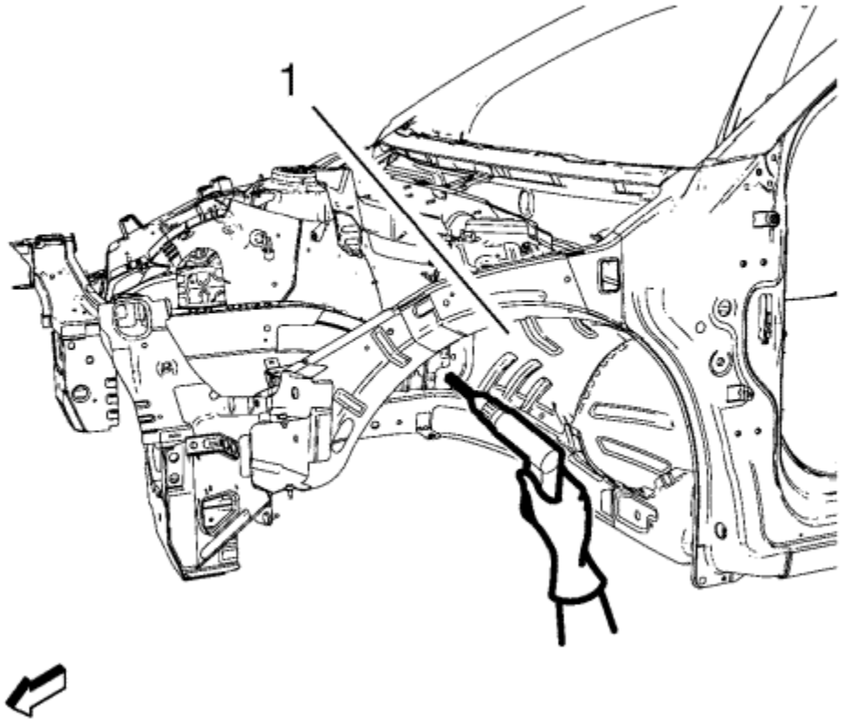

7. Drill all factory welds of the front wheelhouse panel (1). Note the number and location of welds for installation of the service assembly.

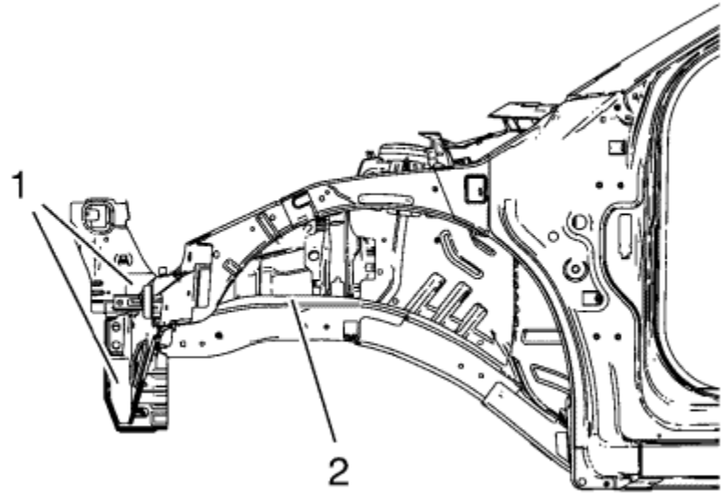

8. Cut the adhesive in the front area (1) and where the front wheelhouse and the front compartment side rail overlap (2) with an appropriate tool.

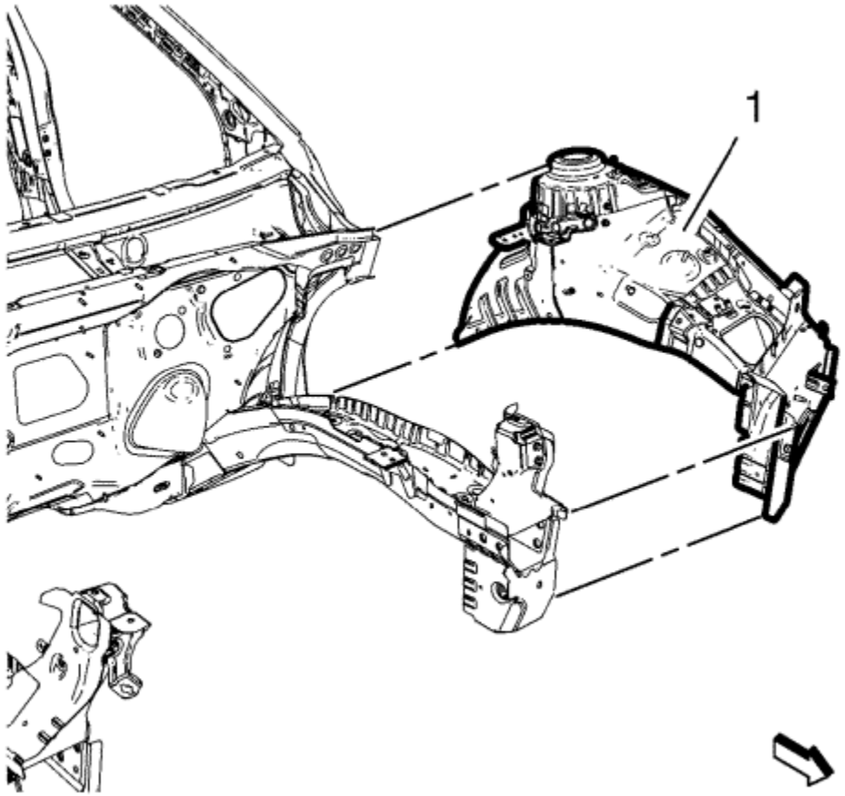

9. Remove the front wheelhouse panel (1).

Installation Procedure

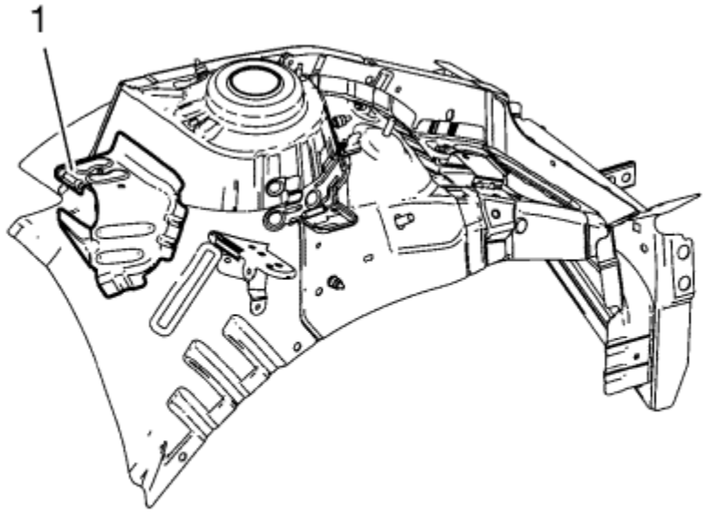

1. Remove the front wheelhouse rear panel brace (1) from service panel.

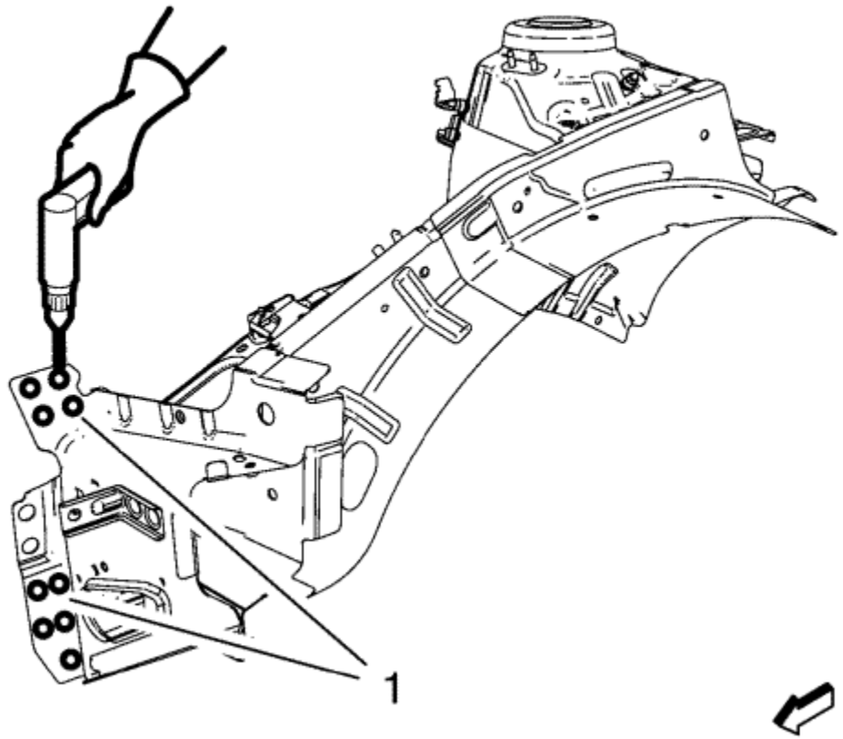

2. Drill **8 mm (5/16 in)** for plug welding (1) instead of the adhesive noted from the front area of the original panel.

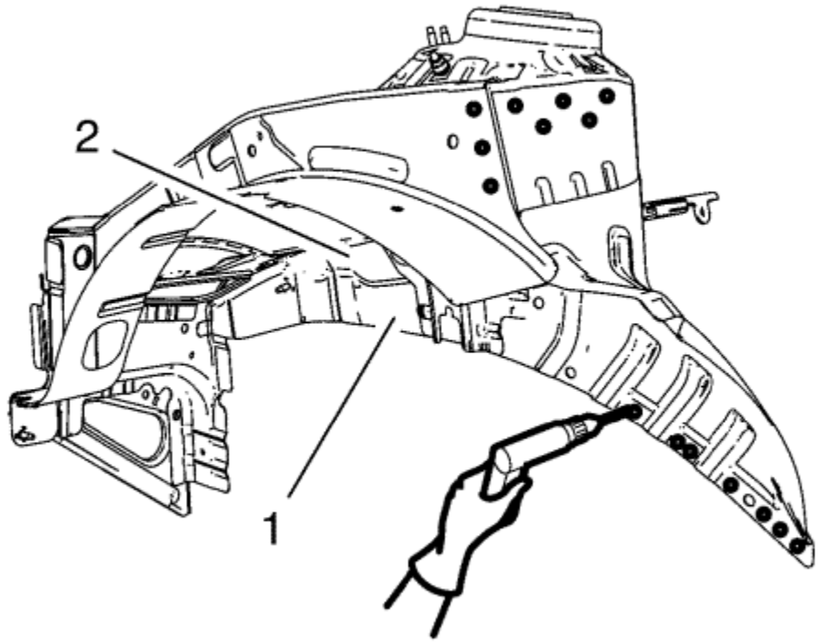

Note : Double the number of drills at the flange where front wheelhouse panel and front compartment side rail overlap (1).

3. Drill **8 mm (5/16 in)** for plug welding along the edges of the front wheelhouse panel (2) as noted from the original panel.
4. Clean and prepare the attaching surfaces for welding.

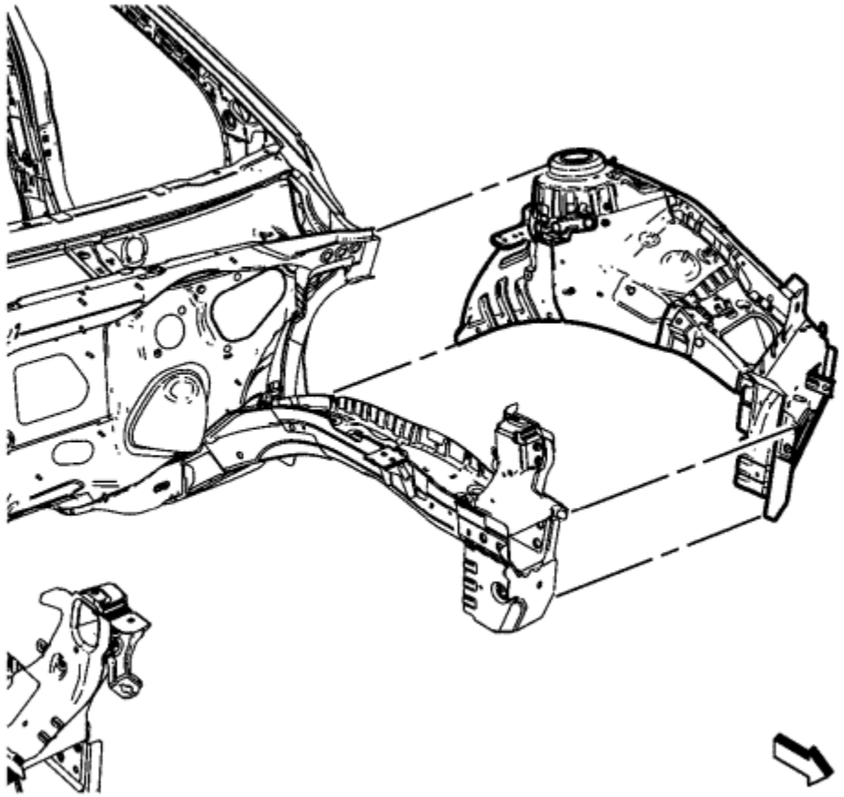

5. Position the front wheelhouse panel (1) on the vehicle.
6. Verify the fit of the front wheelhouse.
7. Clamp the front wheelhouse into position.

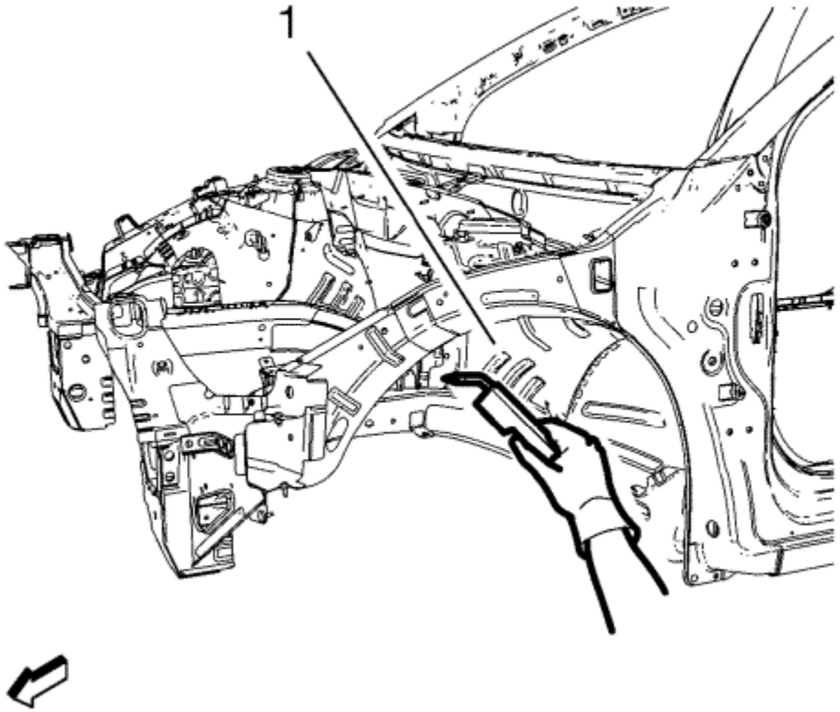

8. Plug weld the front wheelhouse panel (1) accordingly.
9. Apply the sealers and anti-corrosion materials to the repair area, as necessary. Refer to Anti-Corrosion Treatment and Repair .
10. Paint the repaired area. Refer to Basecoat/Clearcoat Paint Systems .
11. Install all related panels and components.
12. If disabled, enable the high voltage system. Refer to High Voltage Enabling .
13. Enable the SIR system. Refer to SIR Disabling and Enabling .

&#169© Copyright Chevrolet. All rights reserved

Front Compartment Upper Side Rail Replacement

Danger: Always perform the High Voltage Disabling procedure prior to servicing any High Voltage component or connection. Personal Protection Equipment (PPE) and proper procedures must be followed.

The High Voltage Disabling procedure will perform the following tasks:

- Identify how to disable high voltage.
- Identify how to test for the presence of high voltage.
- Identify condition under which high voltage is always present and personal protection equipment (PPE) and proper procedures must be followed.

Before working on any high voltage system, be sure to wear the following Personal Protection Equipment:

- Safety glasses with appropriate side shields when within 15 meters (50 feet) of the vehicle, either indoors or outdoors.
- Certified and up-to-date Class "0" Insulation gloves rated at 1000V with leather protectors.
  - Visually and functionally inspect the gloves before use.
  - Wear the Insulation gloves with leather protectors at all times when working with the high voltage battery assembly, whether the system is energised or not.

Failure to follow the procedures exactly as written may result in serious injury or death.

Removal Procedure

Warning : Refer to Approved Equipment for Collision Repair Warning in the Preface section.

Warning : Refer to Glass and Sheet Metal Handling Warning in the Preface section.

1. Disable the SIR system. Refer to SIR Disabling and Enabling .
2. Inspect the high voltage system. Refer to High Voltage System Inspection .
3. Remove all related panels and components.
4. Visually inspect the damage. Repair as much of the damage as possible.
5. Remove the sealers and anti-corrosion materials from the repair area, as necessary. Refer to Anti-Corrosion Treatment and Repair .

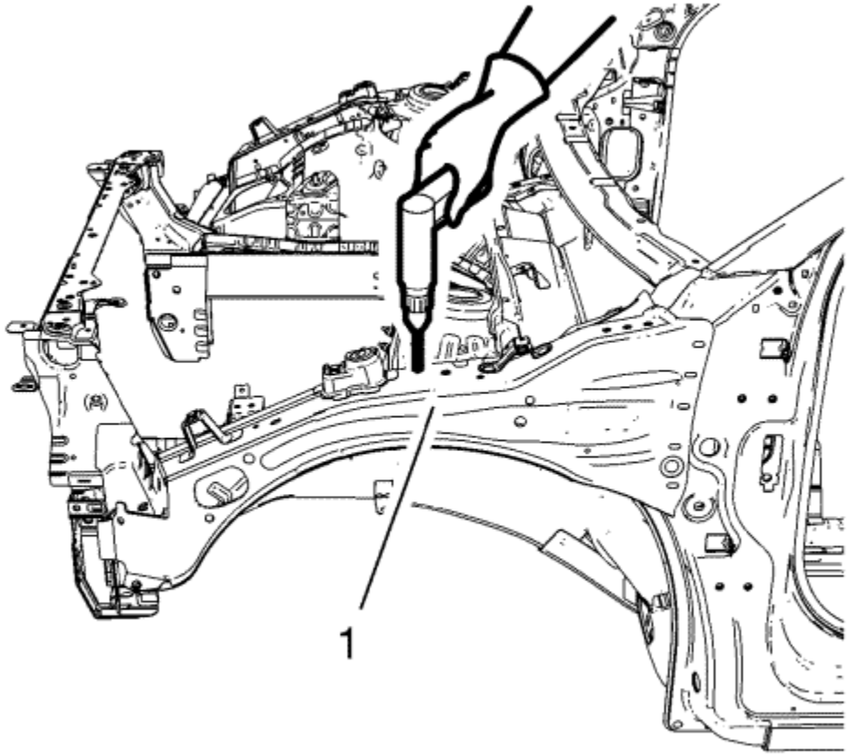

6. Locate and mark all the necessary factory welds and weld seams of the front compartment upper side rail (1).
7. Drill all factory welds. Note the number and location of welds for installation of the service assembly.

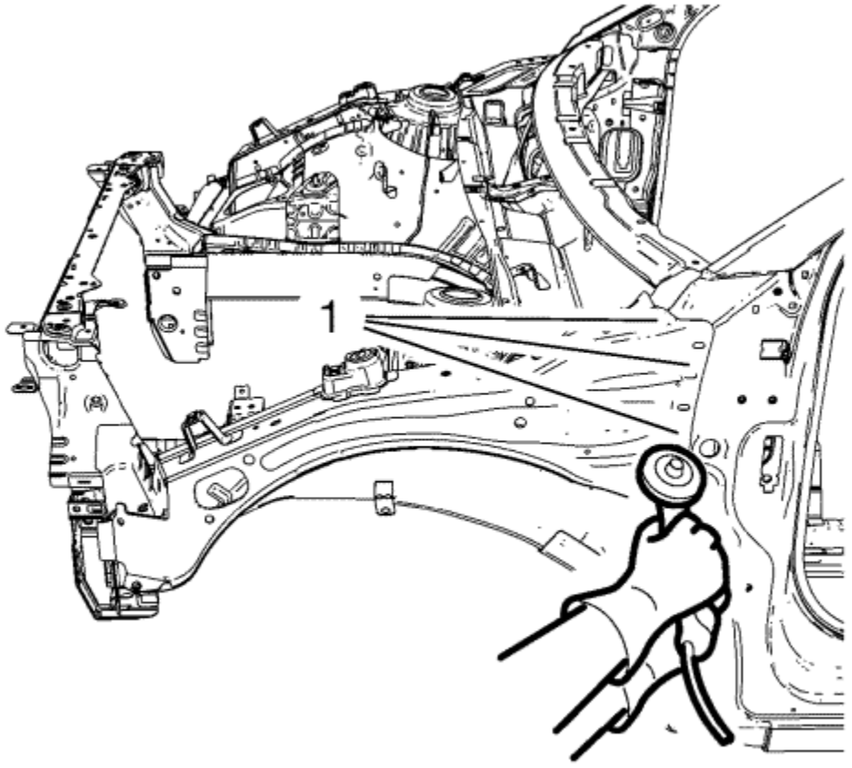

8. Grind factory weld seams (1) of the front compartment upper side rail.

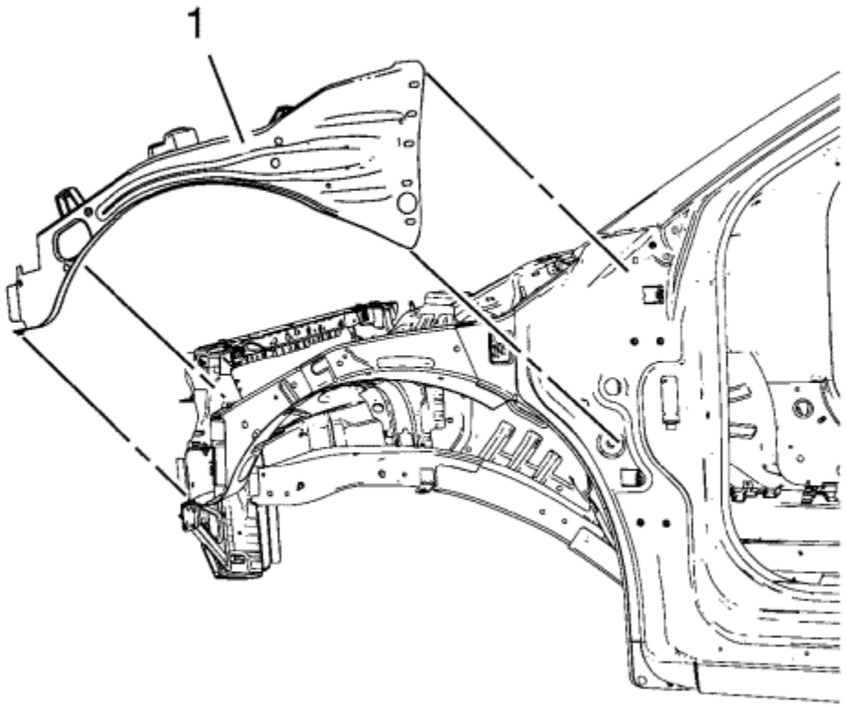

9. Remove the front compartment upper side rail (1).

Installation Procedure

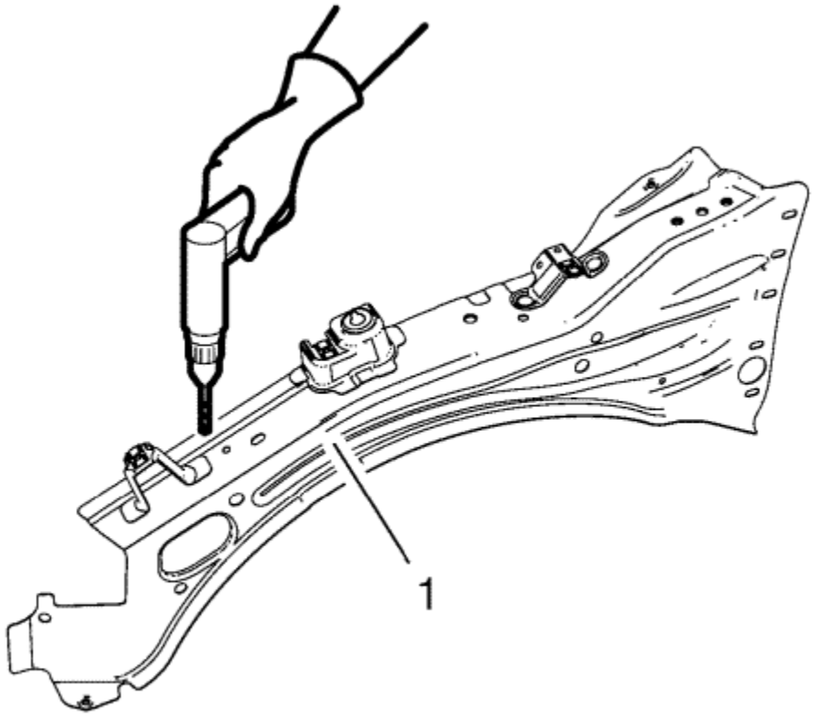

1. Drill **8 mm (5/16 in)** for plug welding along the edges of the front compartment upper side rail (1) as noted from the original panel.
2. Clean and prepare the attaching surfaces for welding.
3. Position the front compartment upper side rail on the vehicle.
4. Verify the fit of the front compartment upper side rail.
5. Clamp the front compartment upper side rail into position.

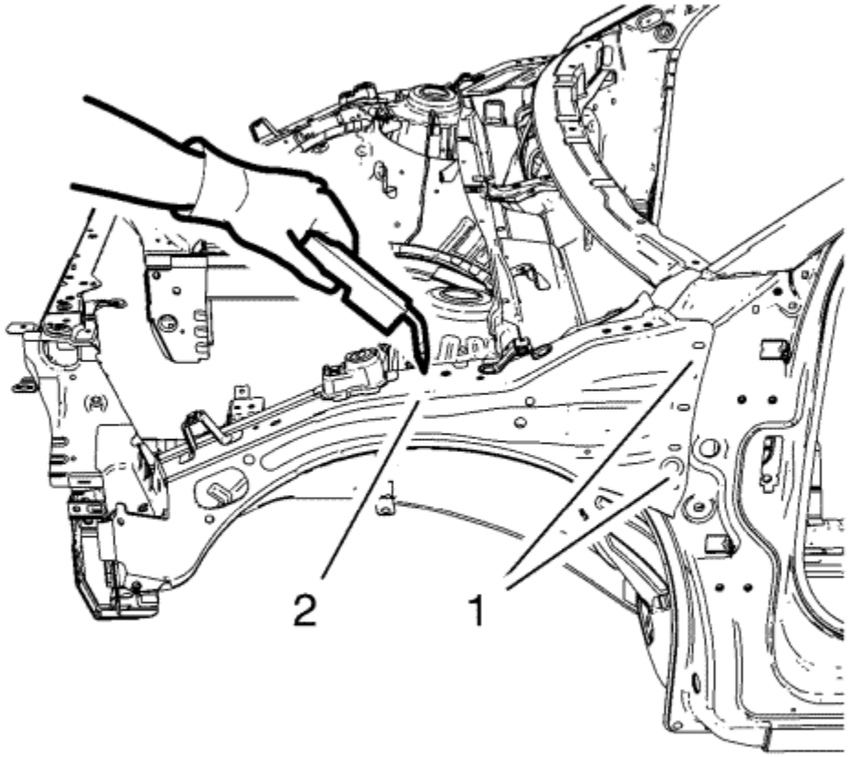

Note : Plug weld factory slots in the front hinge pillar body area (1) as noted from the original panel.

6. Plug weld the front compartment upper side rail (2) accordingly.
7. Apply the sealers and anti-corrosion materials to the repair area, as necessary. Refer to Anti-Corrosion Treatment and Repair .
8. Paint the repaired area. Refer to Basecoat/Clearcoat Paint Systems .
9. Install all related panels and components.
10. If disabled, enable the high voltage system. Refer to High Voltage Enabling .
11. Enable the SIR system. Refer to SIR Disabling and Enabling .

&#169© Copyright Chevrolet. All rights reserved

Front Hinge Pillar Body Sectioning

Danger: Always perform the High Voltage Disabling procedure prior to servicing any High Voltage component or connection. Personal Protection Equipment (PPE) and proper procedures must be followed.

The High Voltage Disabling procedure will perform the following tasks:

- Identify how to disable high voltage.
- Identify how to test for the presence of high voltage.
- Identify condition under which high voltage is always present and personal protection equipment (PPE) and proper procedures must be followed.

Before working on any high voltage system, be sure to wear the following Personal Protection Equipment:

- Safety glasses with appropriate side shields when within 15 meters (50 feet) of the vehicle, either indoors or outdoors.
- Certified and up-to-date Class "0" Insulation gloves rated at 1000V with leather protectors.
  - Visually and functionally inspect the gloves before use.
  - Wear the Insulation gloves with leather protectors at all times when working with the high voltage battery assembly, whether the system is energised or not.

Failure to follow the procedures exactly as written may result in serious injury or death.

Removal Procedure

Warning : Refer to Approved Equipment for Collision Repair Warning in the Preface section.

Warning : Refer to Collision Sectioning Warning in the Preface section.

Warning : Refer to Glass and Sheet Metal Handling Warning in the Preface section.

1. Disable the SIR system. Refer to SIR Disabling and Enabling .
2. Inspect the high voltage system. Refer to High Voltage System Inspection .
3. Disable the high voltage system. Refer to High Voltage Disabling .
4. Remove all related panels and components.
5. Visually inspect the damage. Repair as much of the damage as possible.
6. Remove the sealers and anti-corrosion materials from the repair area as necessary.

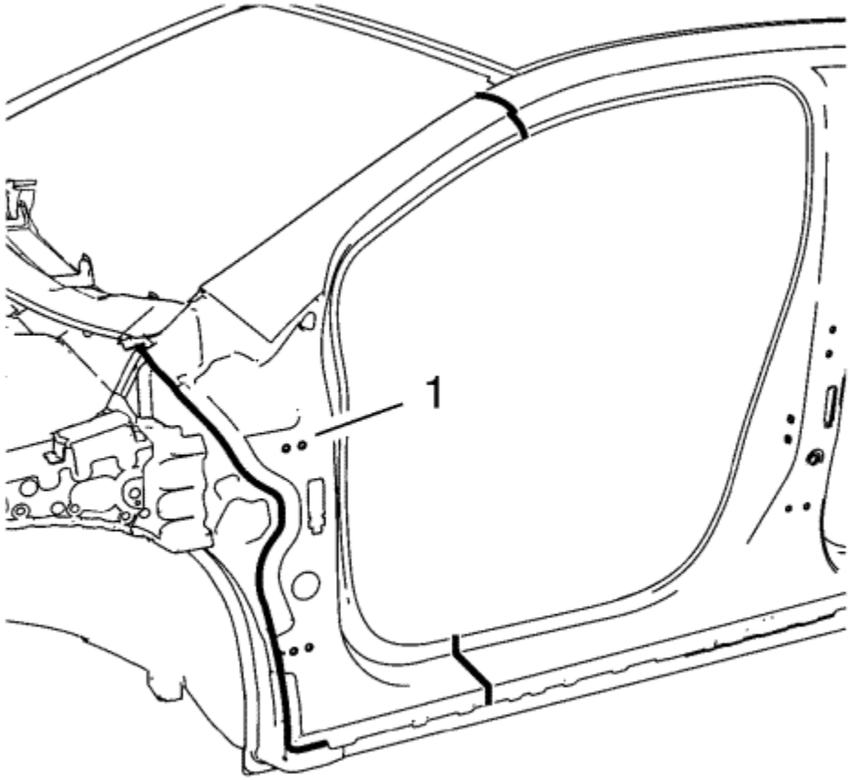

7. Create cut lines on the front hinge pillar (1).

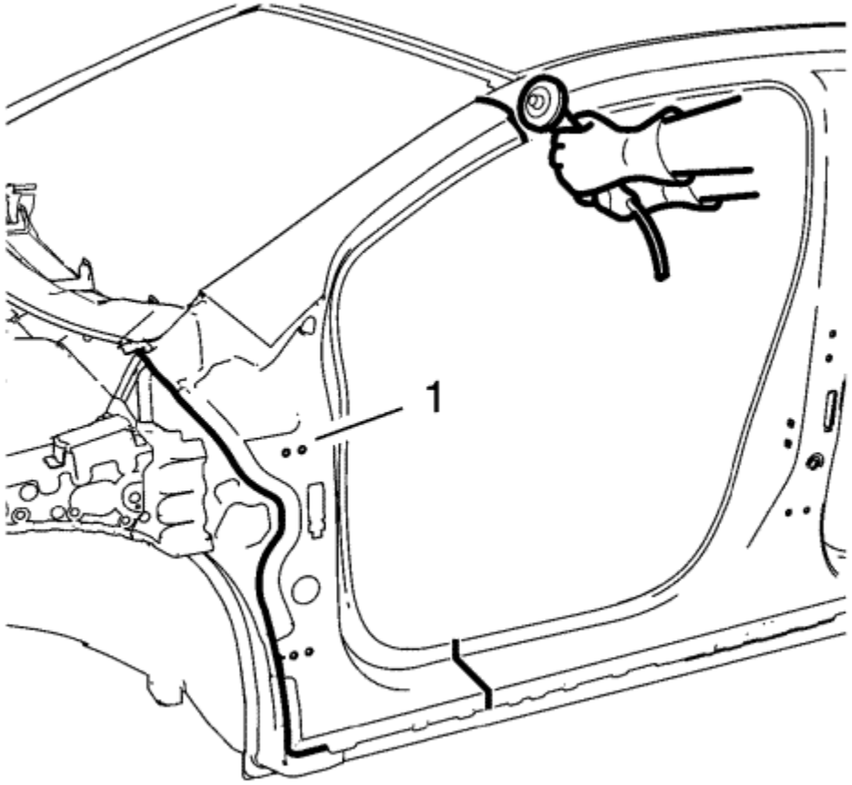

Note : Do not damage any inner panels or reinforcements.

8. Cut the front hinge pillar (1) where the sectioning is to be performed.

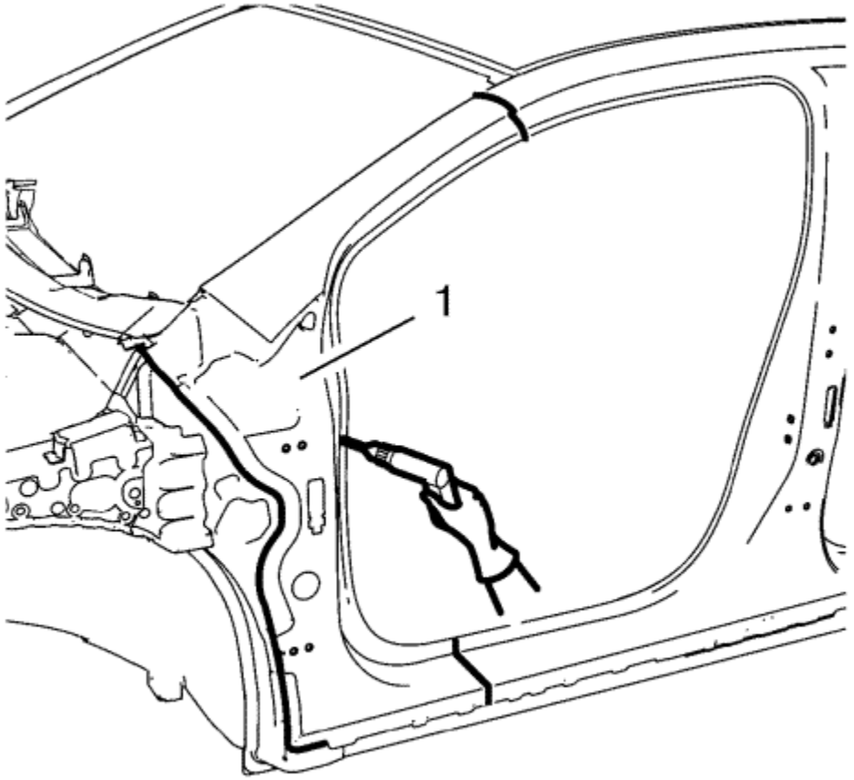

9. Locate and mark all the necessary factory welds of the front hinge pillar (1).
10. Drill all factory welds. Note the number and location of welds for installation of the service assembly.

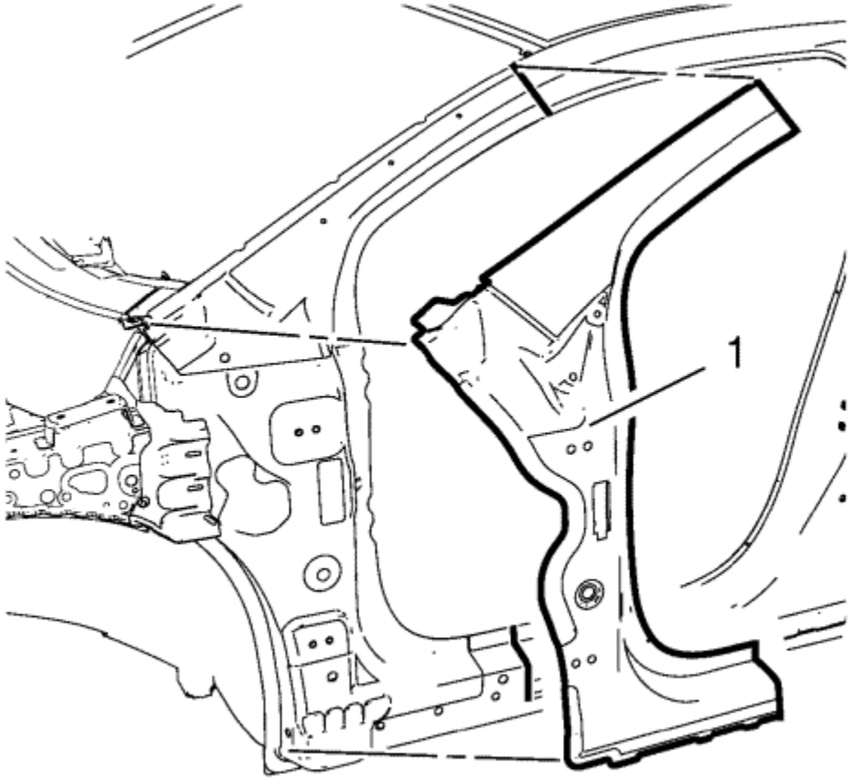

11. Remove the damaged front hinge pillar (1).

Installation Procedure

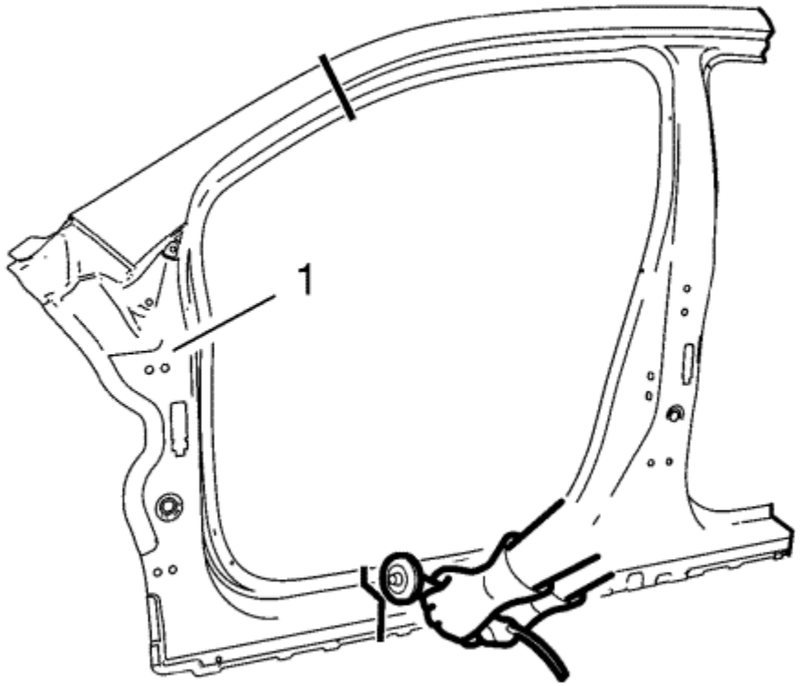

1. Cut the front hinge pillar (1) in corresponding locations to fit the remaining original panel. The sectioning joint should be trimmed to allow a gap of one-and-one-half-times the metal thickness at the sectioning joint.
2. Prepare all mating surfaces as necessary.
3. Clean and prepare the attaching surfaces for spot welding.

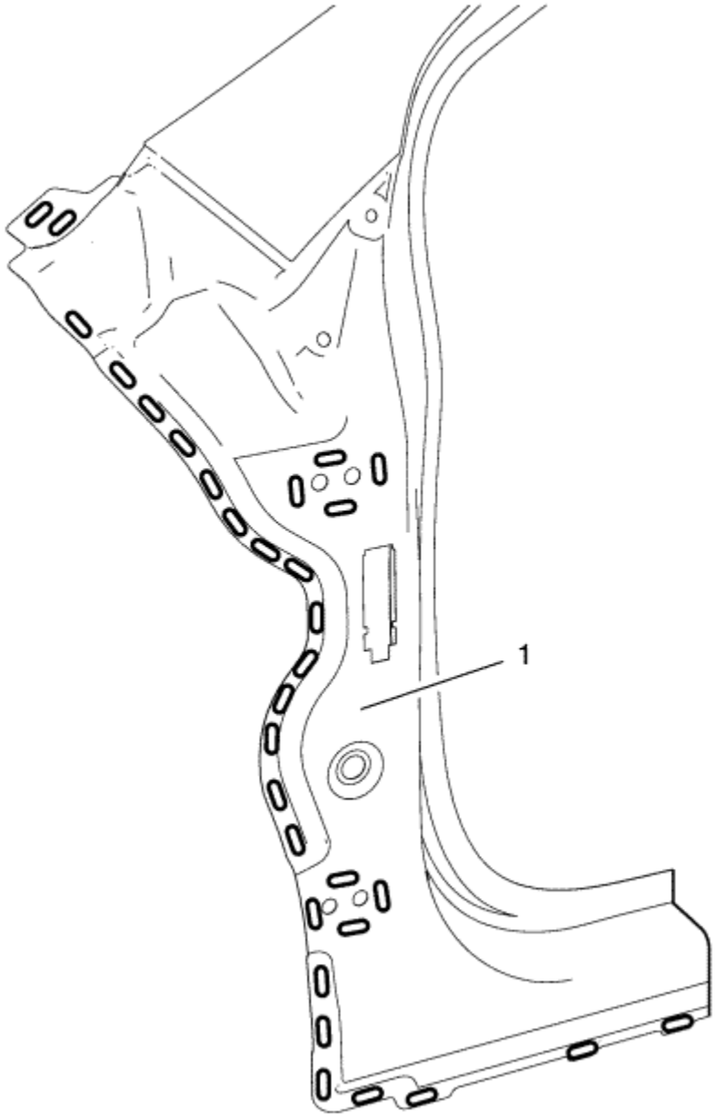

4. Create 31 **5 x 18 mm (4/16 x 11/16 in)** slots for MIG-brazing to the front hinge pillar (1).

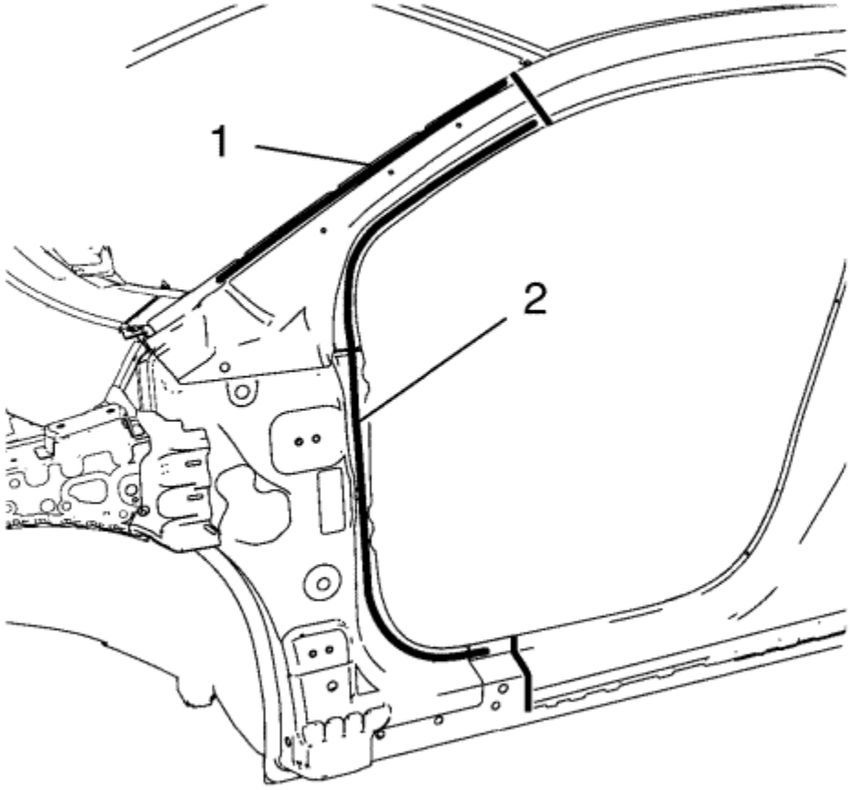

5. Apply structural adhesive to windscreen frame (1) and front hinge pillar reinforcement (2).

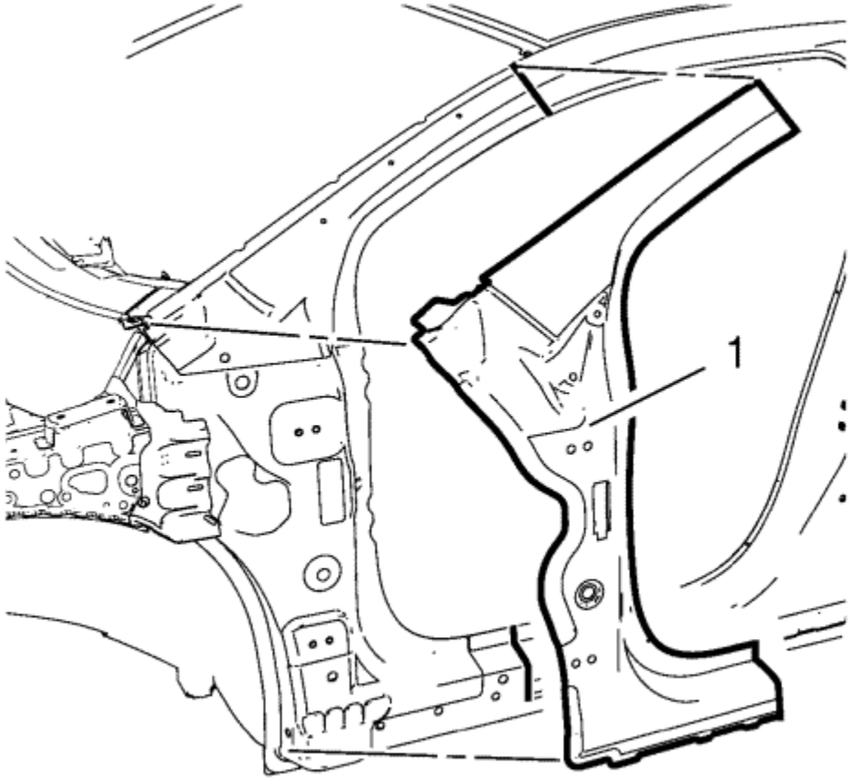

6. Position the front hinge pillar (1) on the vehicle.
7. Verify the fit of the front hinge pillar.
8. Clamp the front hinge pillar into position.

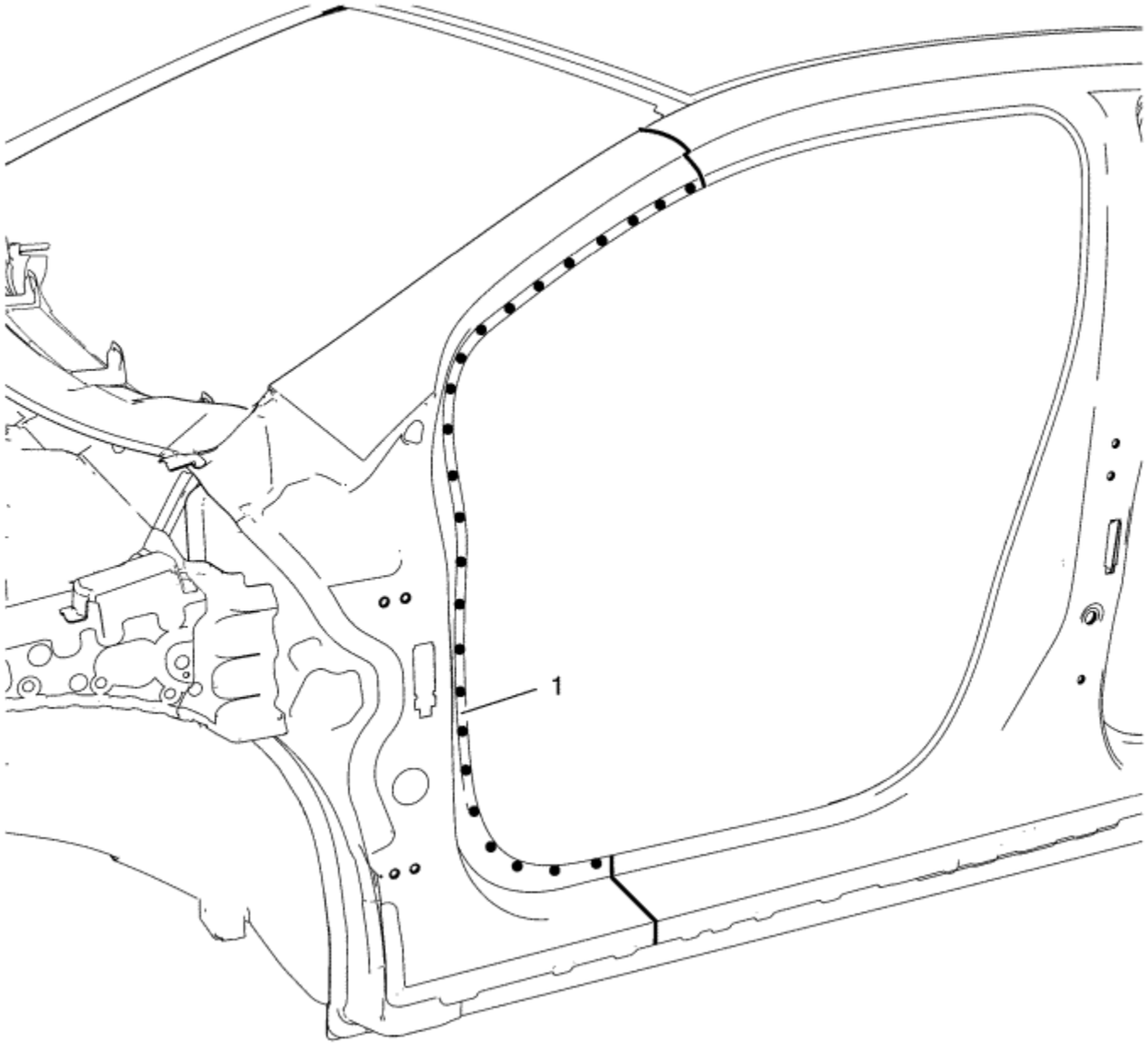

9. Spot weld the front hinge pillar accordingly.

   Flange front side door opening (1) - 26 spot welds.

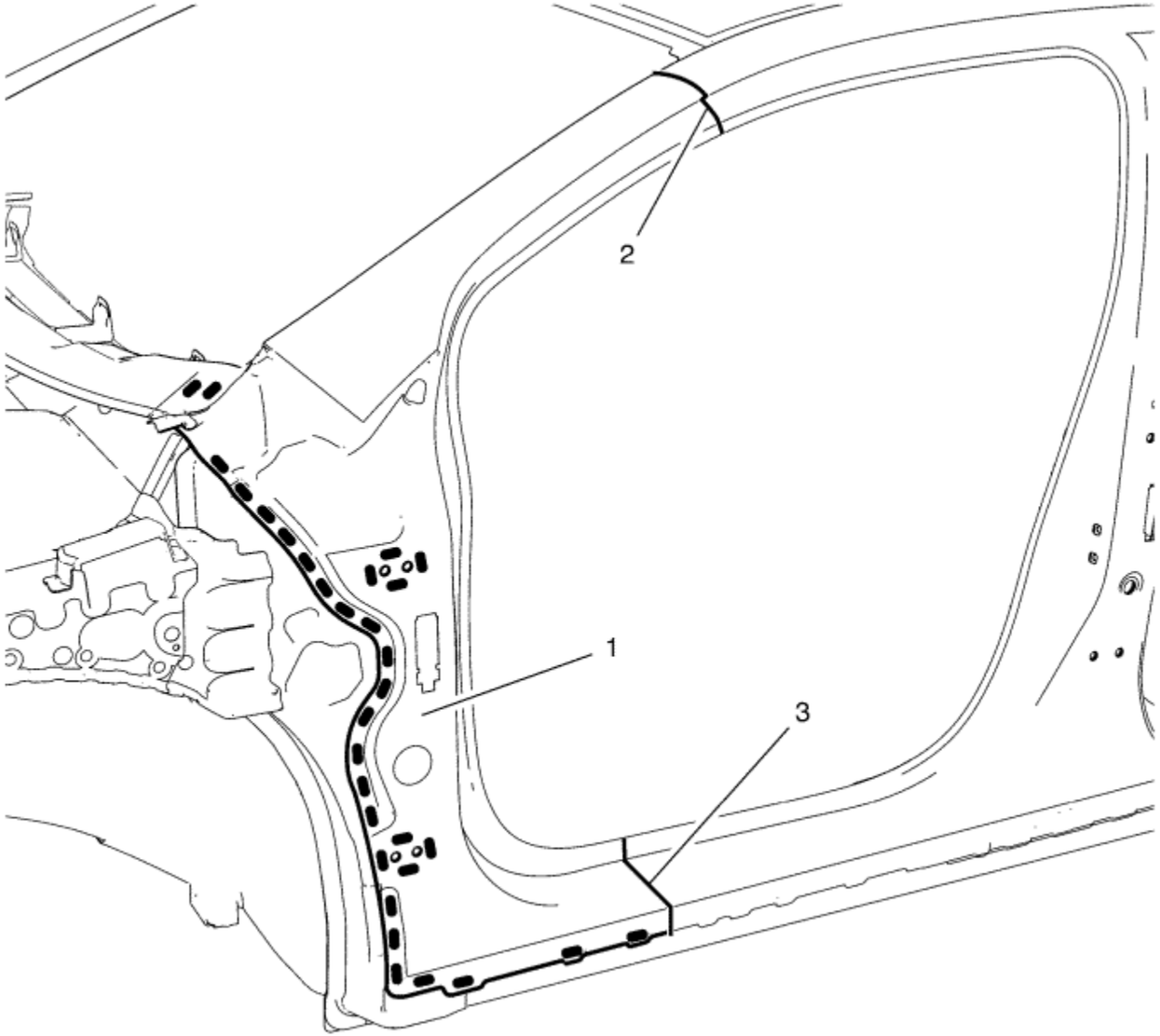

10. Braze the front hinge pillar (1) accordingly.
    10.1. Front hinge pillar / body side outer upper panel (2) - **185 mm**.
    10.2. Front hinge pillar / rocker outer panel (3) - **170 mm**.
    10.3. Front hinge pillar / front hinge pillar reinforcement - 31 **5 x 18 mm (4/16 x 11/16 in)** slot brazes.
11. To create a solid braze with minimum heat distortion, make **25 mm** stitch brazes along the seam with **25 mm** gaps between them. Then go back and complete the stitch braze.
12. Apply the sealers and anti-corrosion materials to the repair area as necessary.

13. Paint the repaired area.
14. Install all related panels and components.
15. Enable the high voltage system. Refer to High Voltage Enabling .
16. Enable the SIR system. Refer to SIR Disabling and Enabling .

&#169© Copyright Chevrolet. All rights reserved

Body Hinge Pillar Lower Reinforcement Replacement

Danger: Always perform the High Voltage Disabling procedure prior to servicing any High Voltage component or connection. Personal Protection Equipment (PPE) and proper procedures must be followed.

The High Voltage Disabling procedure will perform the following tasks:

- Identify how to disable high voltage.
- Identify how to test for the presence of high voltage.
- Identify condition under which high voltage is always present and personal protection equipment (PPE) and proper procedures must be followed.

Before working on any high voltage system, be sure to wear the following Personal Protection Equipment:

- Safety glasses with appropriate side shields when within 15 meters (50 feet) of the vehicle, either indoors or outdoors.
- Certified and up-to-date Class "0" Insulation gloves rated at 1000V with leather protectors.
  - Visually and functionally inspect the gloves before use.
  - Wear the Insulation gloves with leather protectors at all times when working with the high voltage battery assembly, whether the system is energised or not.

Failure to follow the procedures exactly as written may result in serious injury or death.

Removal Procedure

Warning : Refer to Approved Equipment for Collision Repair Warning in the Preface section.

Warning : Refer to Collision Sectioning Warning in the Preface section.

Warning : Refer to Glass and Sheet Metal Handling Warning in the Preface section.

1. Disable the SIR System. Refer to SIR Disabling and Enabling .
2. Inspect the high voltage system. Refer to High Voltage System Inspection .
3. Remove all related panels and components.
4. Visually inspect the damage. Repair as much of the damage as possible.
5. Remove the sealers and anti-corrosion materials from the repair area, as necessary. Refer to Anti-Corrosion Treatment and Repair .
6. Section body side outer-hinge pillar area. Refer to Front Hinge Pillar Body Sectioning .

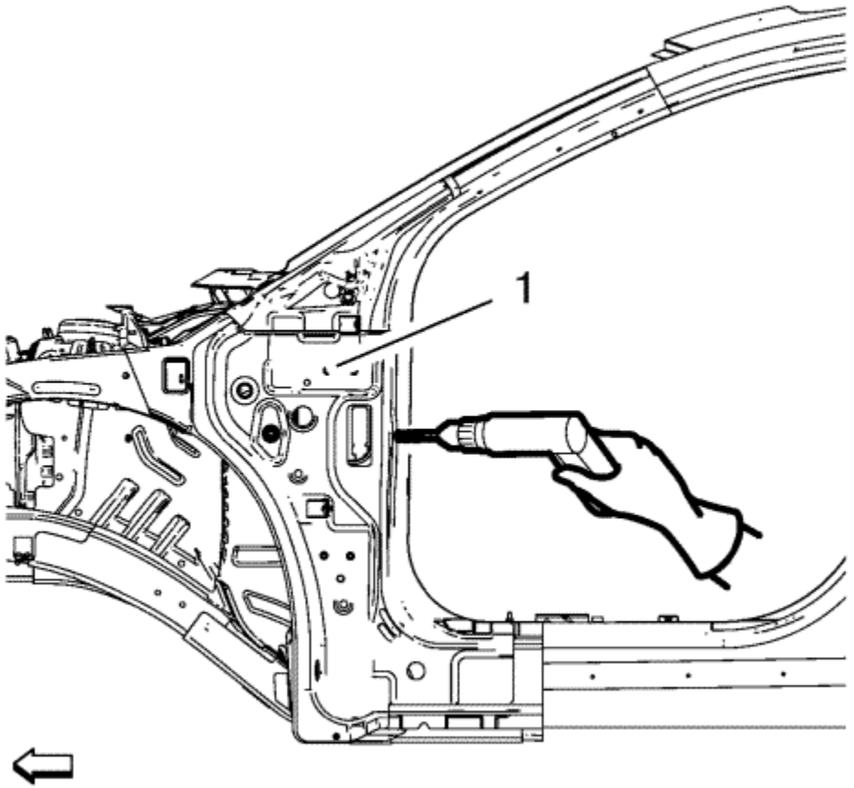

7. Locate and mark all the necessary factory welds of the body hinge pillar lower reinforcement (1).
8. Drill all factory welds. Note the number and location of welds for installation of the service assembly.

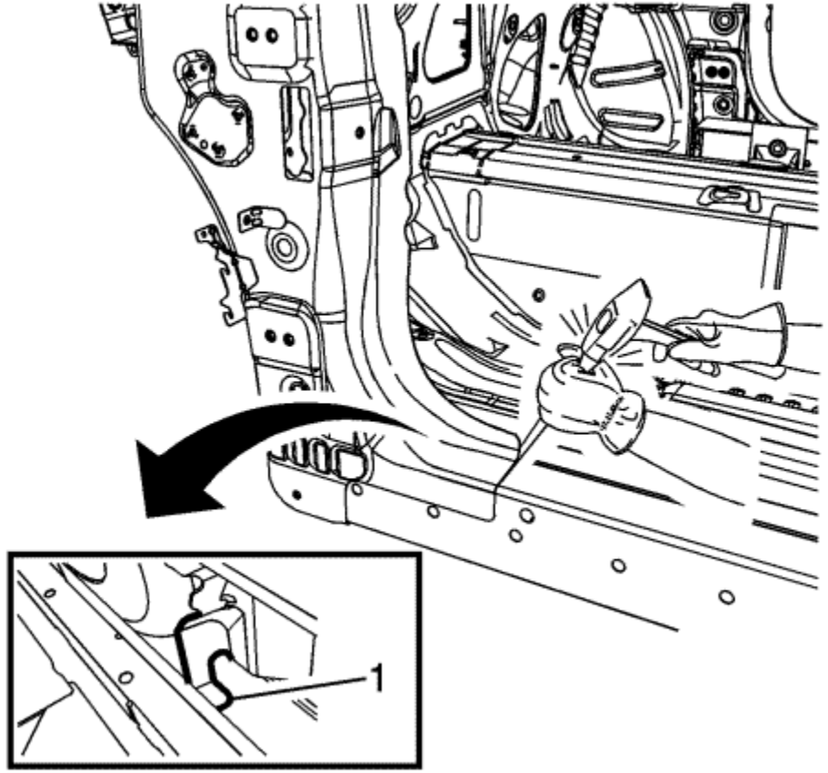

Note : There is a hidden weld on the inside of the pillar reinforcement.

9. Remove hidden spot weld (1) with a chisel.

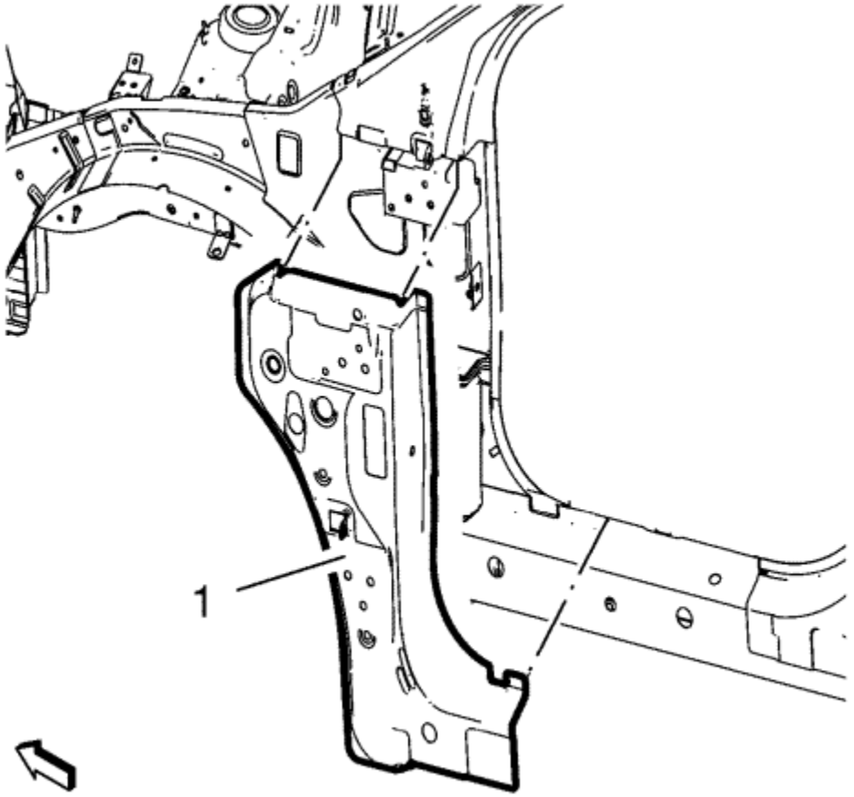

10. Remove the damaged body hinge pillar lower reinforcement (1).

Installation Procedure

1. Prepare all mating surfaces as necessary.

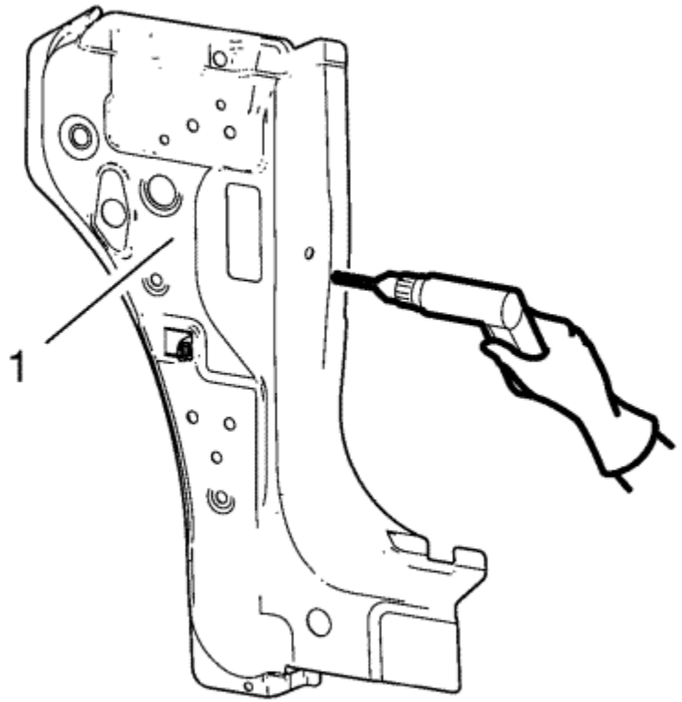

2. Drill **8 mm (5/16 in)** for plug welding along the edges of the body hinge pillar lower reinforcement (1) as noted from the original panel.

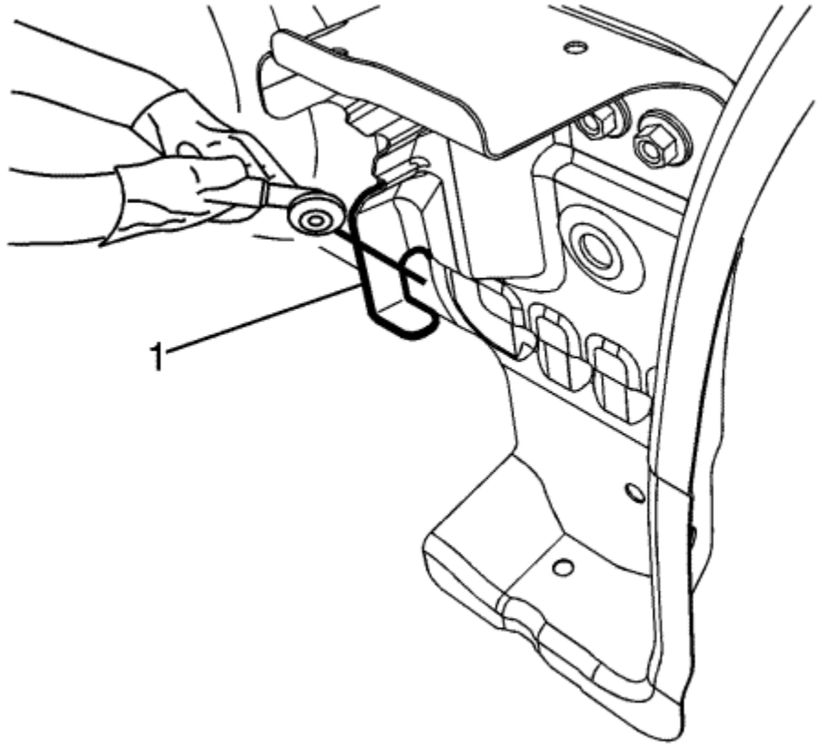

3. Remove weld tab portion (1) from inner bracket with appropriate tool.
4. Clean and prepare the attaching surfaces for welding.

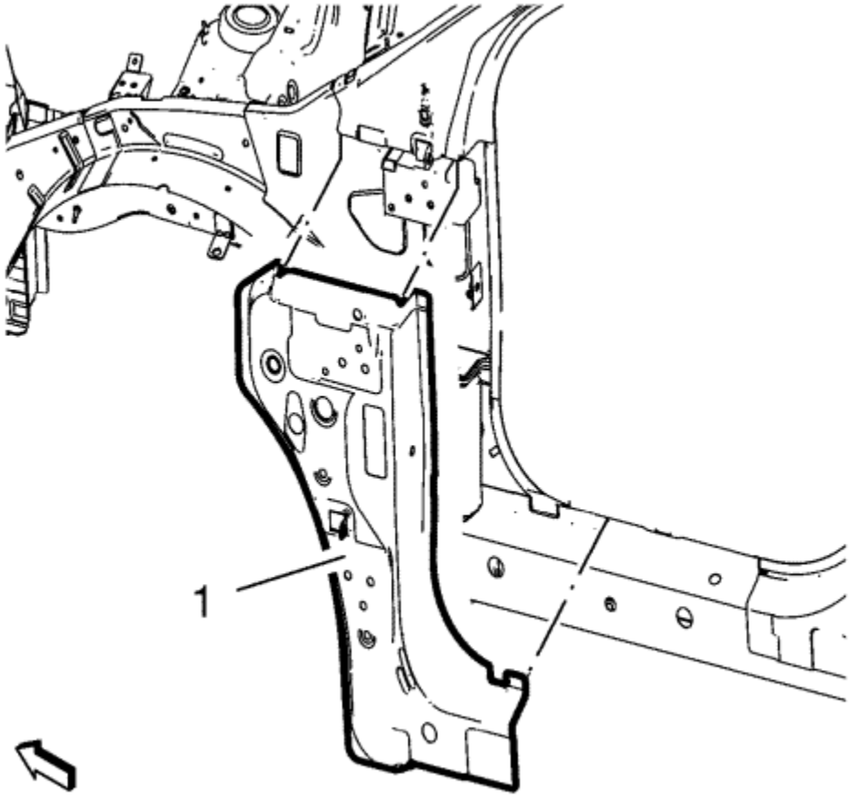

5. Position the body hinge pillar lower reinforcement (1) on the vehicle.
6. Verify the fit of the body hinge pillar lower reinforcement.
7. Clamp the body hinge pillar lower reinforcement into position.

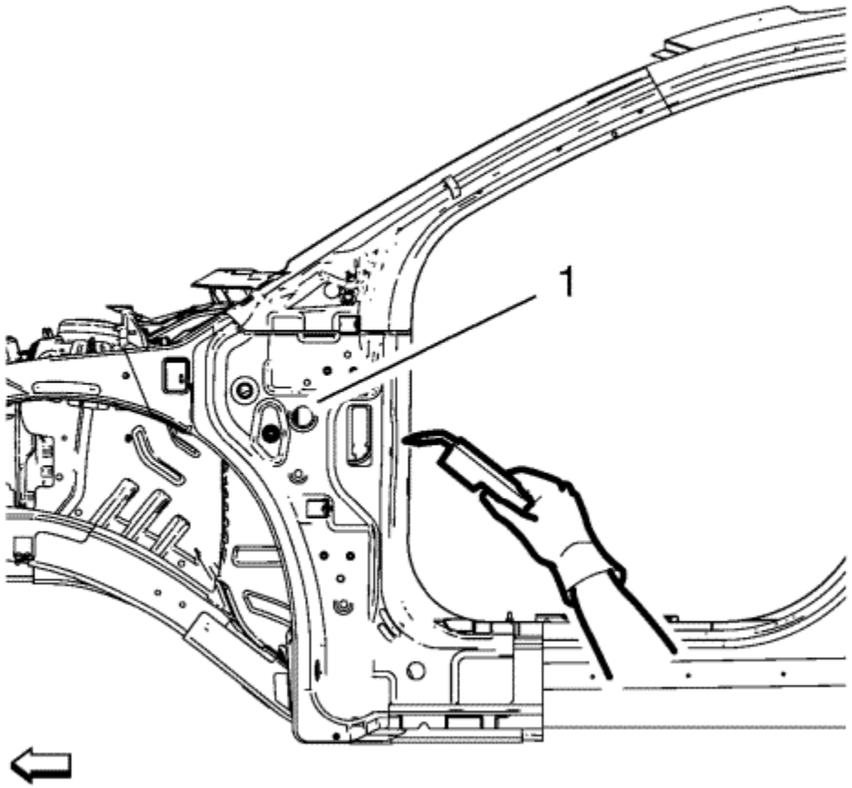

8. Plug weld the body hinge pillar lower reinforcement (1) accordingly.
9. Apply the sealers and anti-corrosion materials to the repair area, as necessary. Refer to Anti-Corrosion Treatment and Repair .
10. Install the bodyside outer hinge pillar section. Refer to Front Hinge Pillar Body Sectioning .
11. Paint the repaired area. Refer to Basecoat/Clearcoat Paint Systems .
12. Install all related panels and components.
13. If disabled, enable the high voltage system. Refer to High Voltage Enabling .
14. Enable the SIR system. Refer to SIR Disabling and Enabling .

&#169© Copyright Chevrolet. All rights reserved

Roof Outer Panel Replacement

Danger: Always perform the High Voltage Disabling procedure prior to servicing any High Voltage component or connection. Personal Protection Equipment (PPE) and proper procedures must be followed.

The High Voltage Disabling procedure will perform the following tasks:

- Identify how to disable high voltage.
- Identify how to test for the presence of high voltage.
- Identify condition under which high voltage is always present and personal protection equipment (PPE) and proper procedures must be followed.

Before working on any high voltage system, be sure to wear the following Personal Protection Equipment:

- Safety glasses with appropriate side shields when within 15 meters (50 feet) of the vehicle, either indoors or outdoors.
- Certified and up-to-date Class "0" Insulation gloves rated at 1000V with leather protectors.
  - Visually and functionally inspect the gloves before use.
  - Wear the Insulation gloves with leather protectors at all times when working with the high voltage battery assembly, whether the system is energised or not.

Failure to follow the procedures exactly as written may result in serious injury or death.

Removal Procedure

Warning : Refer to Approved Equipment for Collision Repair Warning in the Preface section.

Warning : Refer to Glass and Sheet Metal Handling Warning in the Preface section.

1. Disable the SIR system. Refer to SIR Disabling and Enabling .
2. Inspect the high voltage system. Refer to High Voltage System Inspection .
3. Disable the high voltage system. Refer to High Voltage Disabling .
4. Remove all related panels and components.
5. Visually inspect the damage. Repair as much of the damage as possible.
6. Remove the sealers and anti-corrosion materials from the repair area as necessary.

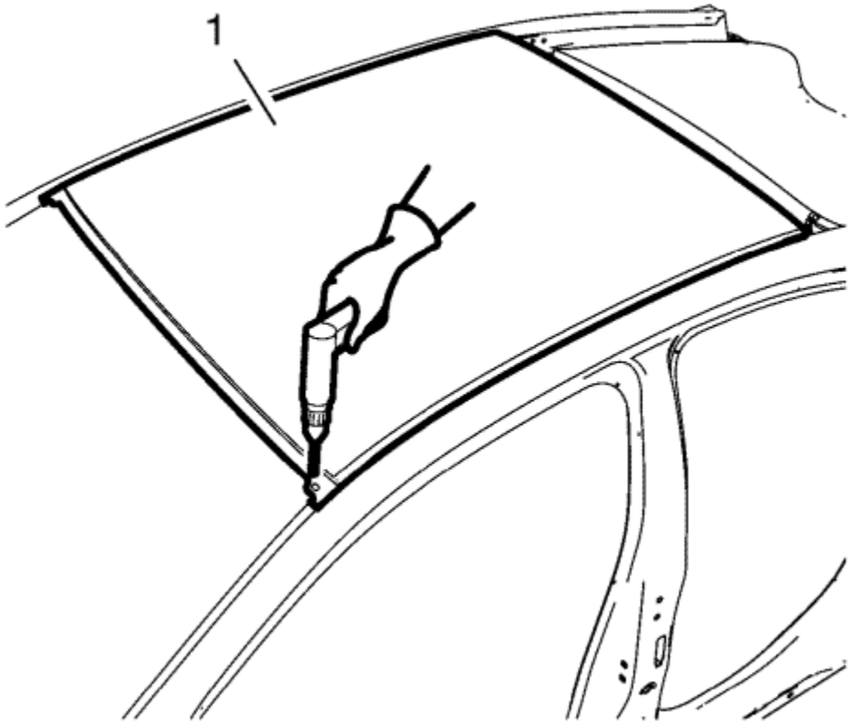

7. Locate and mark all the necessary factory welds of the roof outer panel (1).
8. Drill all factory welds. Note the number and location of welds for installation of the service assembly.

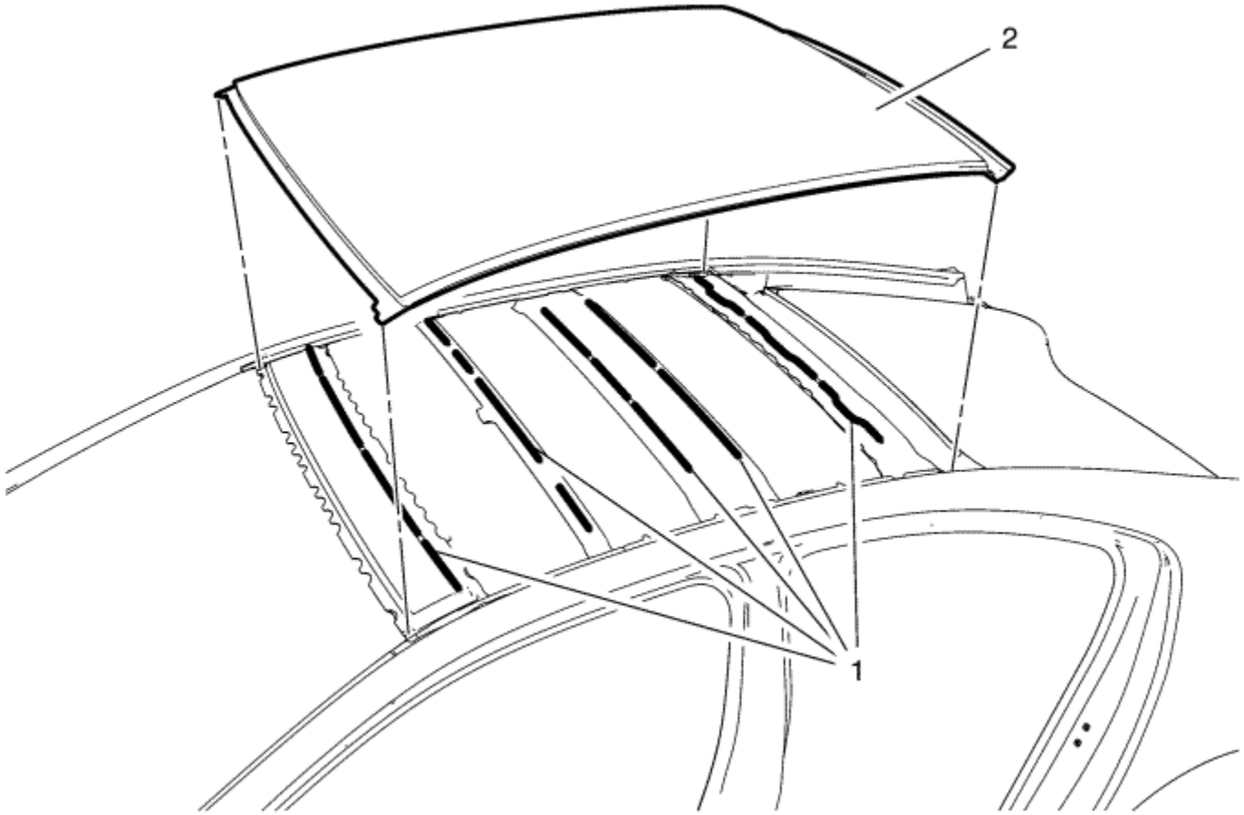

9. To remove the damaged roof outer panel (2) cut the adhesive (1) with a suitable tool.

Installation Procedure

1. Prepare all mating surfaces as necessary.
2. Clean and prepare the attaching surfaces for spot welding.

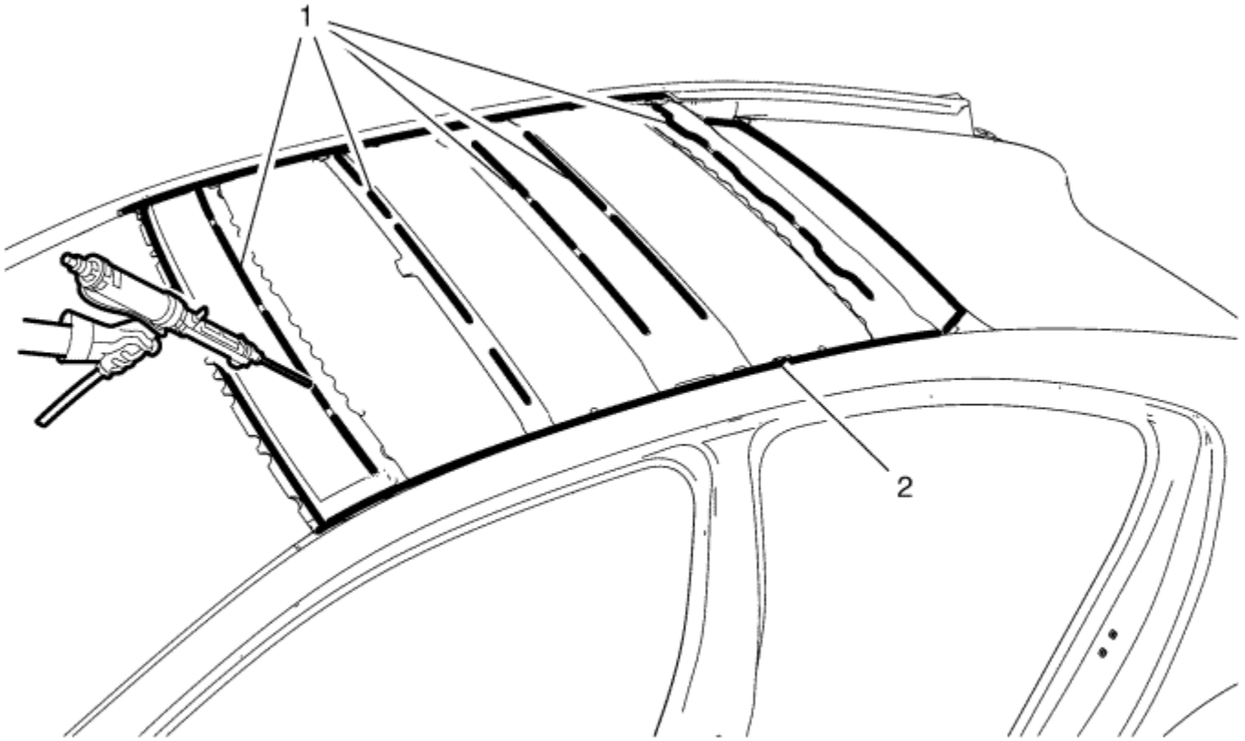

3. Apply one-part urethane adhesive to the roof bows (1) and apply structural adhesive the attaching surfaces (2) of the roof outer panel.

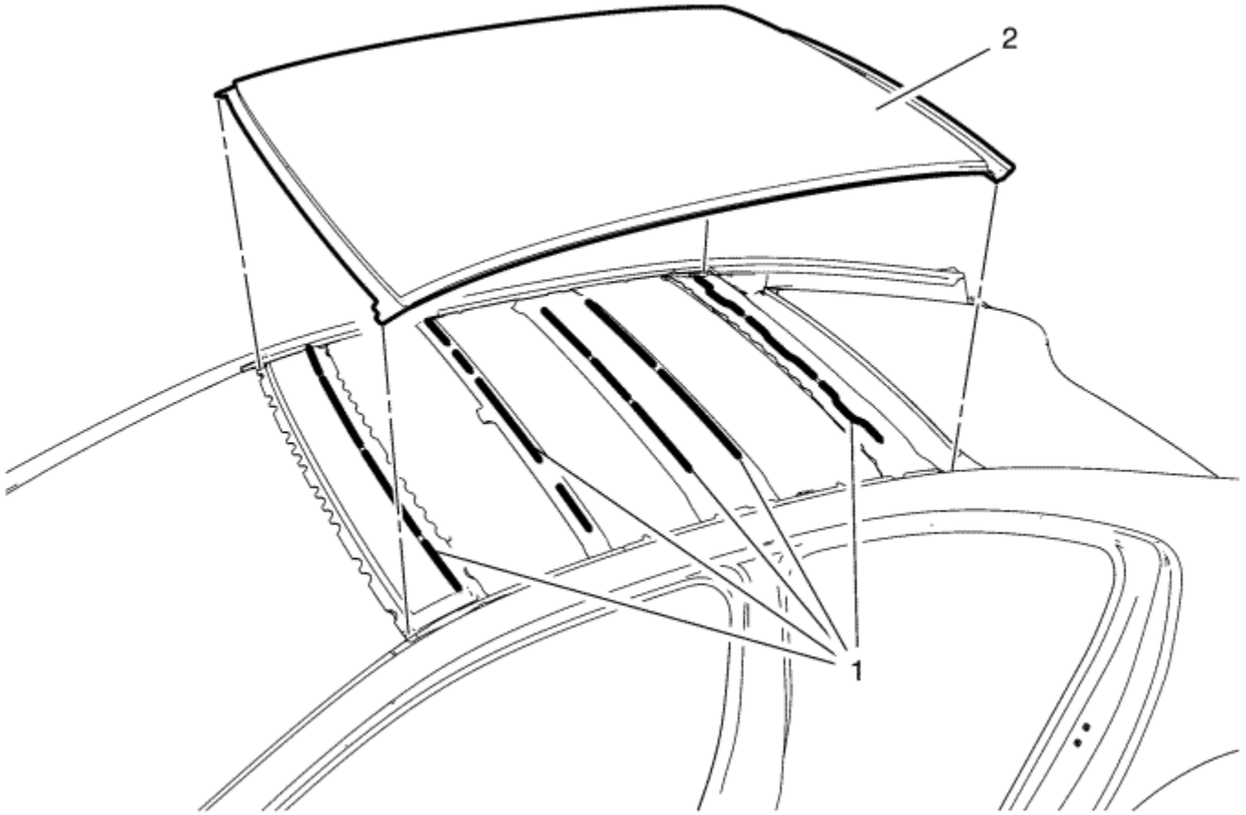

4. Position the roof outer panel (2) on the vehicle.
5. Verify the fit of the roof outer panel.
6. Clamp the roof outer panel into position.

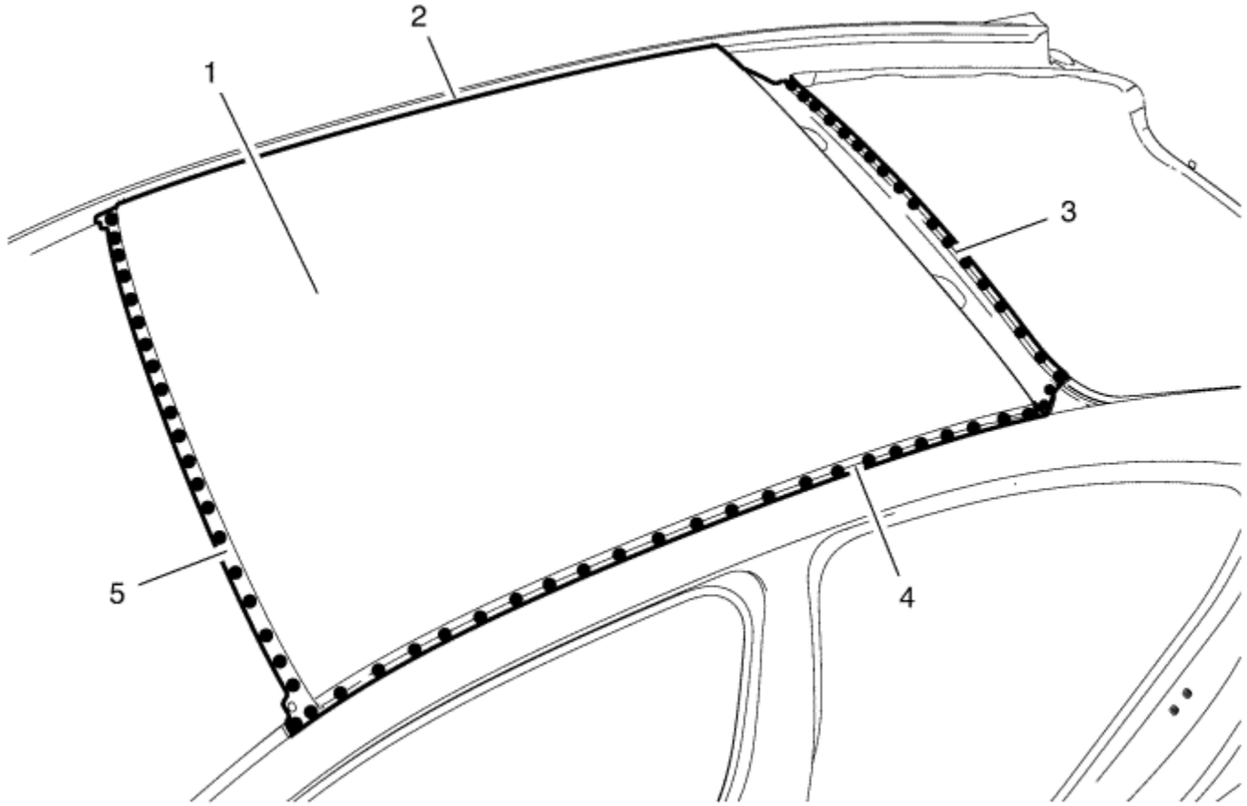

7. Spot weld the roof outer panel (1) accordingly.
   7.1. Flange roof side (2) - 26 spot welds.
   7.2. Flange liftgate opening (3) - 18 spot welds.
   7.3. Flange roof side (4) - 26 spot welds.
   7.4. Flange windscreen opening (5) - 19 spot welds.
8. Apply the sealers and anti-corrosion materials to the repair area as necessary.
9. Paint the repaired area.
10. Install all related panels and components.
11. Enable the high voltage system. Refer to High Voltage Enabling .
12. Enable the SIR system. Refer to SIR Disabling and Enabling .

&#169© Copyright Chevrolet. All rights reserved

Rocker Inner Panel Replacement

Danger: Always perform the High Voltage Disabling procedure prior to servicing any High Voltage component or connection. Personal Protection Equipment (PPE) and proper procedures must be followed.

The High Voltage Disabling procedure will perform the following tasks:

- Identify how to disable high voltage.
- Identify how to test for the presence of high voltage.
- Identify condition under which high voltage is always present and personal protection equipment (PPE) and proper procedures must be followed.

Before working on any high voltage system, be sure to wear the following Personal Protection Equipment:

- Safety glasses with appropriate side shields when within 15 meters (50 feet) of the vehicle, either indoors or outdoors.
- Certified and up-to-date Class "0" Insulation gloves rated at 1000V with leather protectors.
  - Visually and functionally inspect the gloves before use.
  - Wear the Insulation gloves with leather protectors at all times when working with the high voltage battery assembly, whether the system is energised or not.

Failure to follow the procedures exactly as written may result in serious injury or death.

Removal Procedure

Warning : Refer to Approved Equipment for Collision Repair Warning in the Preface section.

Warning : Refer to Collision Sectioning Warning in the Preface section.

Warning : Refer to Glass and Sheet Metal Handling Warning in the Preface section.

1. Disable the SIR System. Refer to SIR Disabling and Enabling .
2. Inspect the high voltage system. Refer to High Voltage System Inspection .
3. Remove all related panels and components.
4. Visually inspect the damage. Repair as much of the damage as possible.
5. Remove the sealers and anti-corrosion materials from the repair area, as necessary. Refer to Anti-Corrosion Treatment and Repair .

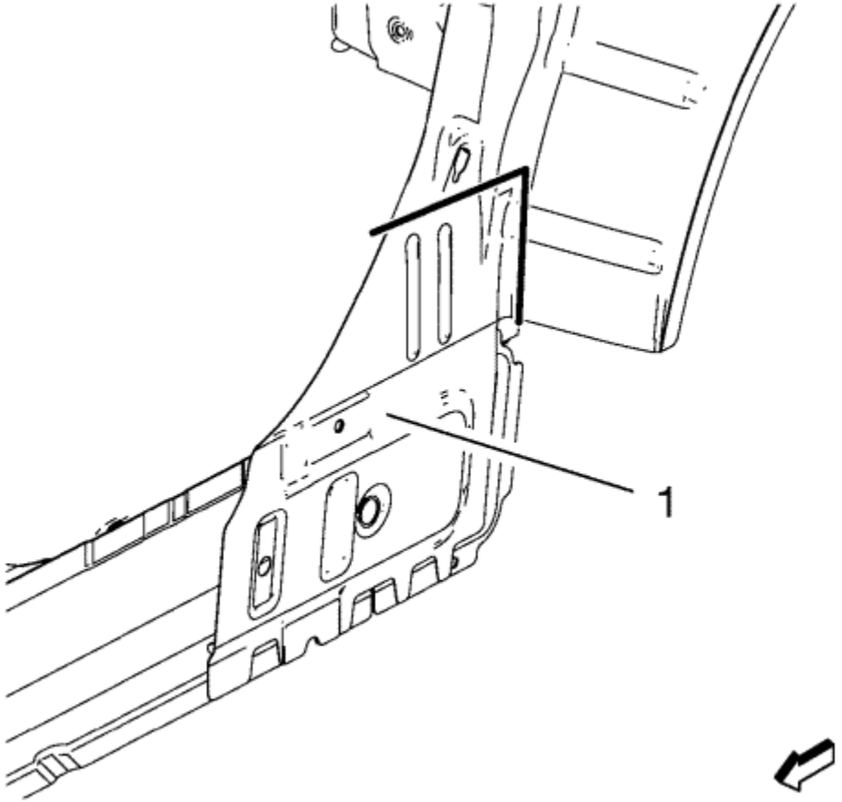

6. Create cut lines on the body side inner panel (1).

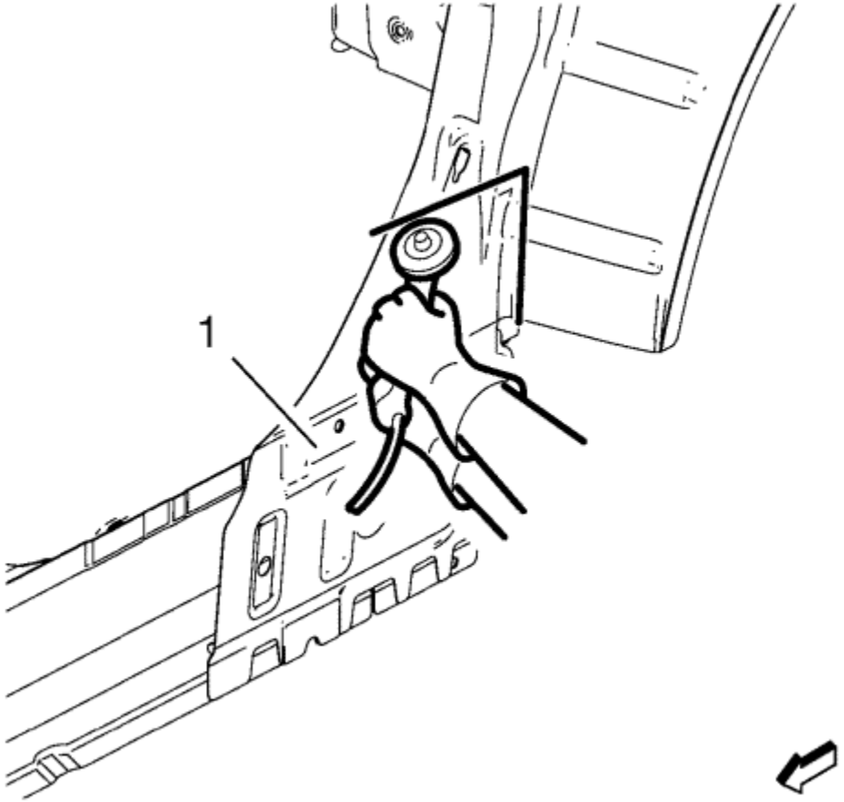

Note : Do not damage any inner panels or reinforcements.

7. Cut the body side inner panel (1) where sectioning is to be performed.

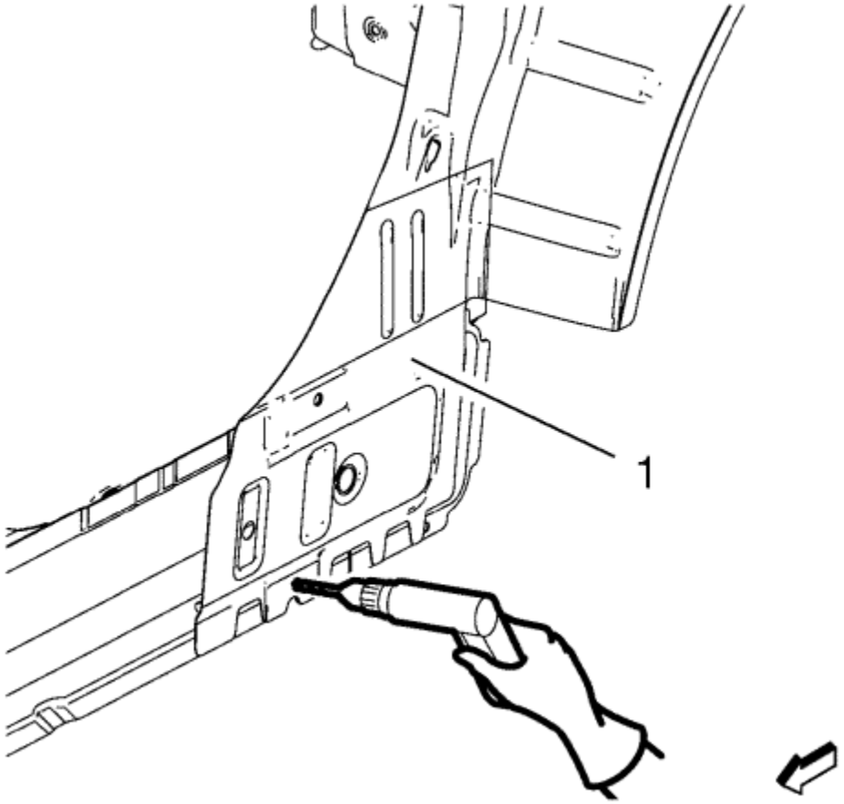

8. Locate and mark all the necessary factory welds of the body side inner panel (1).
9. Drill all factory welds. Note the number and location of welds for installation of the service assembly.

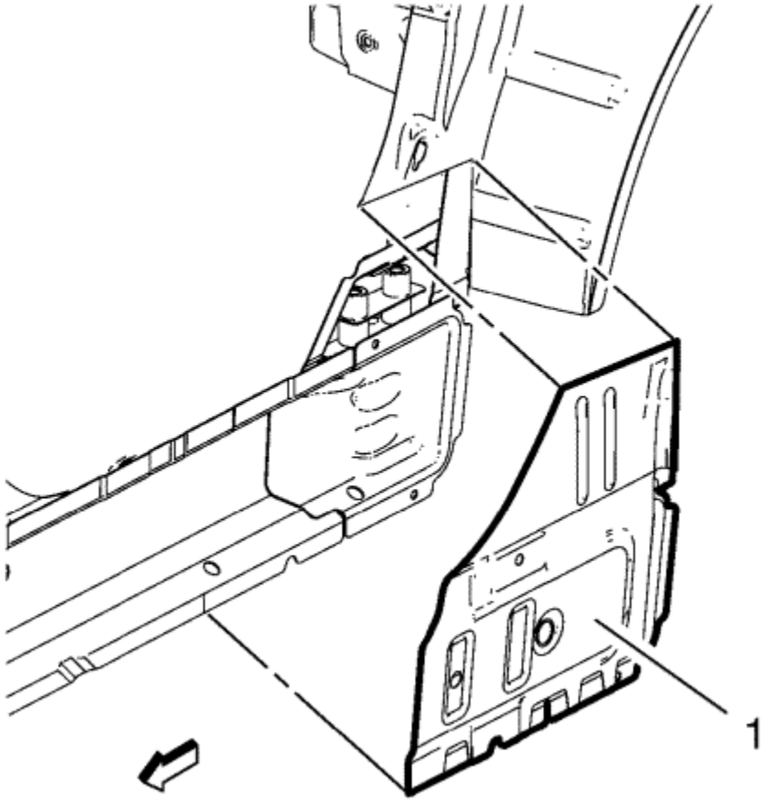

10. Remove the body side inner panel (1).

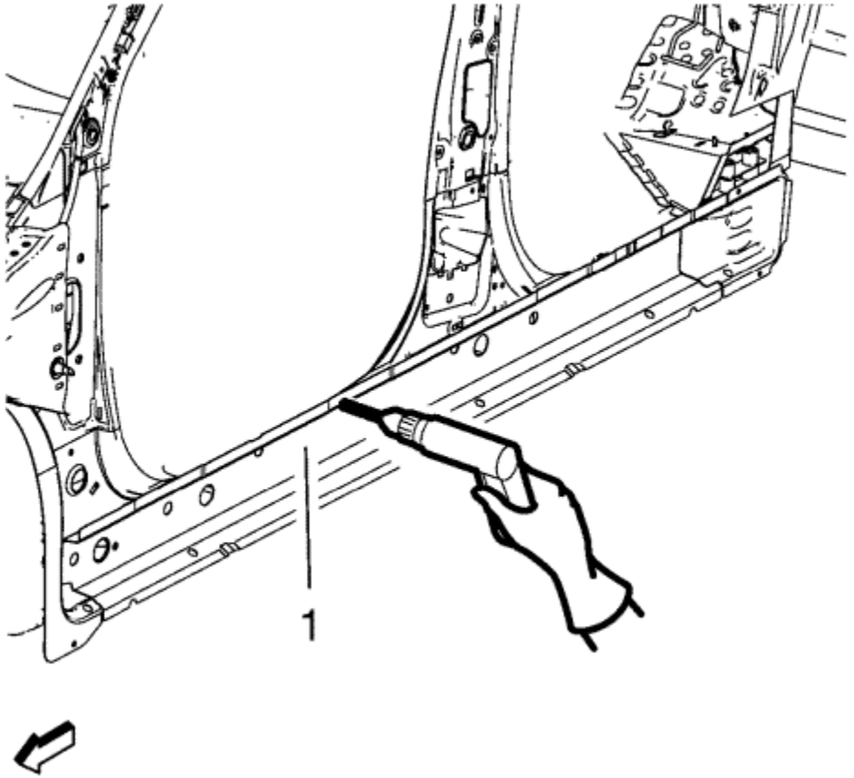

11. Locate and mark all the necessary factory welds of the rocker inner panel (1).
12. Drill all factory welds. Note the number and location of welds for installation of the service assembly.

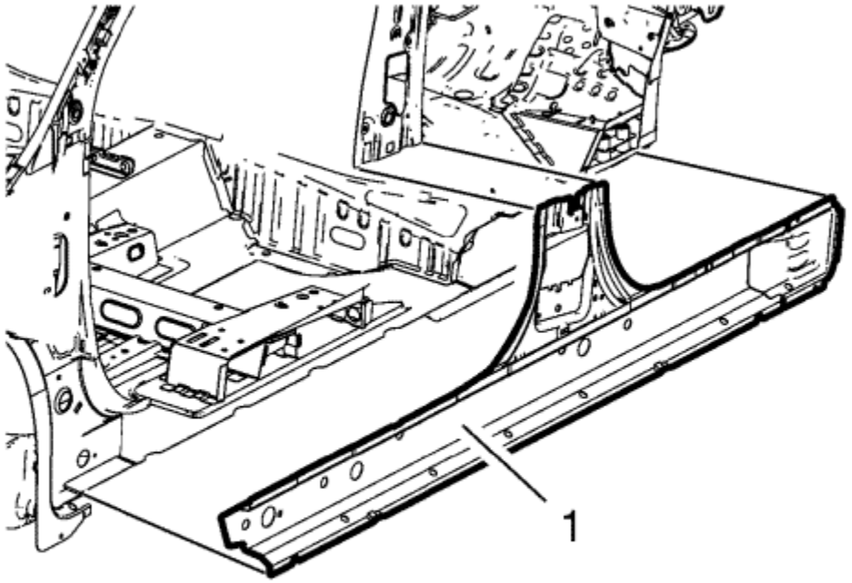

13. Remove the damaged rocker inner panel (1).

Installation Procedure

1. Align the rocker inner panel.

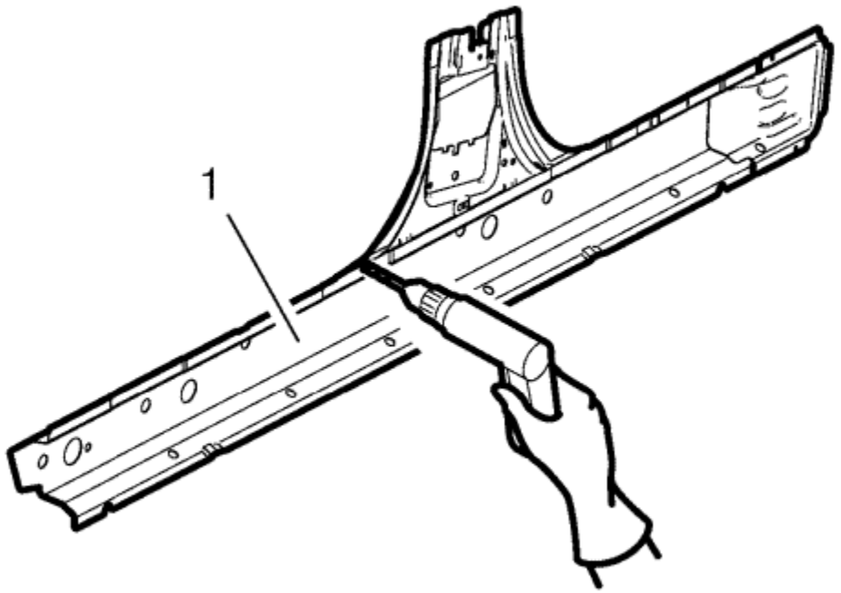

2. Drill 8 mm (5/16 in) for plug welding along the edges of the rocker inner panel (1) as noted from the original panel.
3. Clean and prepare the attaching surfaces for welding.
4. Position the rocker inner panel on the vehicle.
5. Verify the fit of the quarter outer panel.
6. Clamp the rocker inner panel into position.

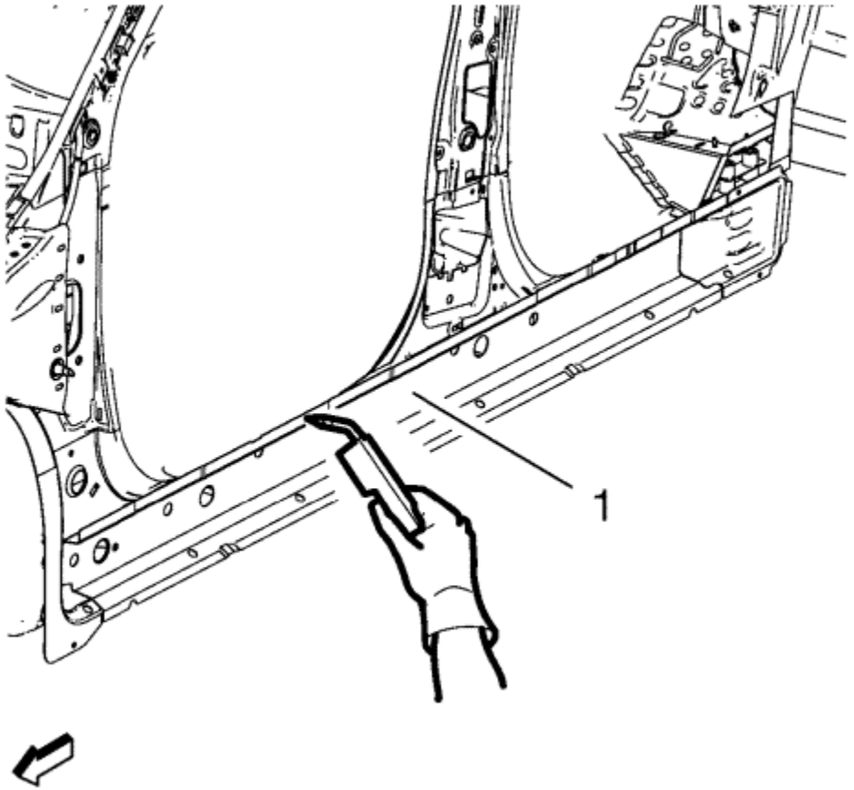

7. Plug weld the sill inner panel (1) accordingly.

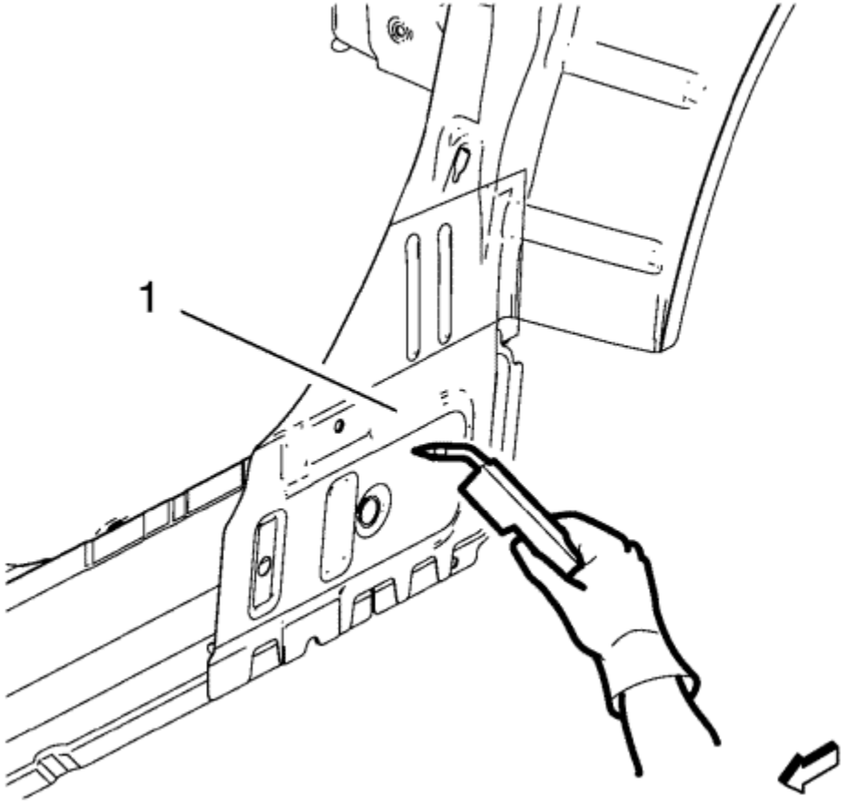

8. Plug weld the body side inner panel (1) accordingly.
9. To create a solid weld with minimum heat distortion, make 25 mm (1 in) stitch welds along the seam with 25 mm (1 in) gaps between them. Then go back and complete the stitch weld.
10. Apply the sealers and anti-corrosion materials to the repair area, as necessary. Refer to Anti-Corrosion Treatment and Repair .
11. Paint the repaired area. Refer to Basecoat/Clearcoat Paint Systems .
12. Install all related panels and components.
13. If disabled, enable the high voltage system. Refer to High Voltage Enabling .
14. Enable the SIR system. Refer to SIR Disabling and Enabling .

&#169© Copyright Chevrolet. All rights reserved

Rocker Outer Panel Sectioning

Removal Procedure

Warning : Refer to Approved Equipment for Collision Repair Warning in the Preface section.

Warning : Refer to Glass and Sheet Metal Handling Warning in the Preface section.

1. Disable the SIR system. Refer to SIR Disabling and Enabling .

   Danger: Always perform the High Voltage Disabling procedure prior to servicing any High Voltage component or connection. Personal Protection Equipment (PPE) and proper procedures must be followed.

   The High Voltage Disabling procedure will perform the following tasks:

   - Identify how to disable high voltage.
   - Identify how to test for the presence of high voltage.
   - Identify condition under which high voltage is always present and personal protection equipment (PPE) and proper procedures must be followed.

   Failure to follow the procedures exactly as written may result in serious injury or death.

2. Disable the high voltage system. Refer to High Voltage Disabling .
3. Remove all related panels and components.
4. Visually inspect the damage. Repair as much of the damage as possible.
5. Remove the sealers and anti-corrosion materials from the repair area as necessary.

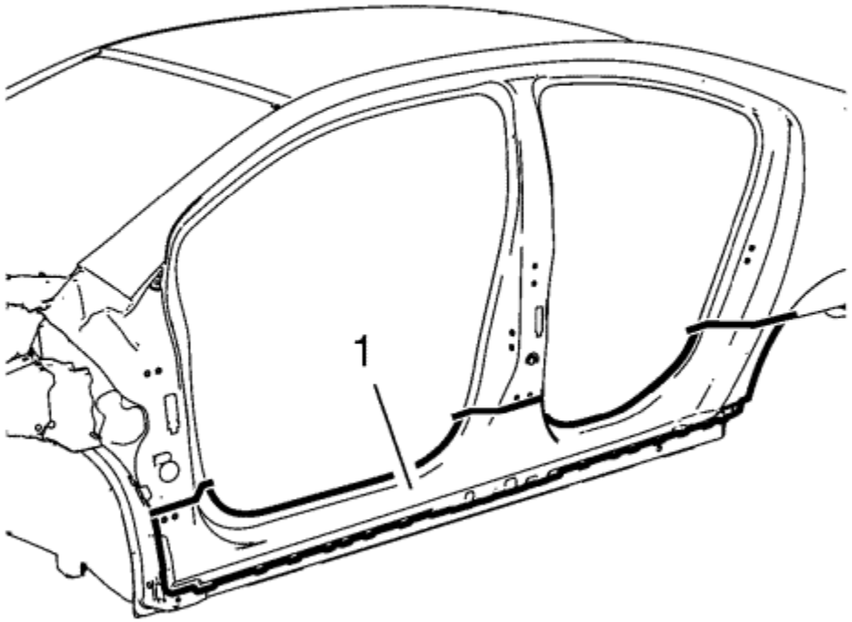

6. Create cut lines on the rocker outer panel (1)

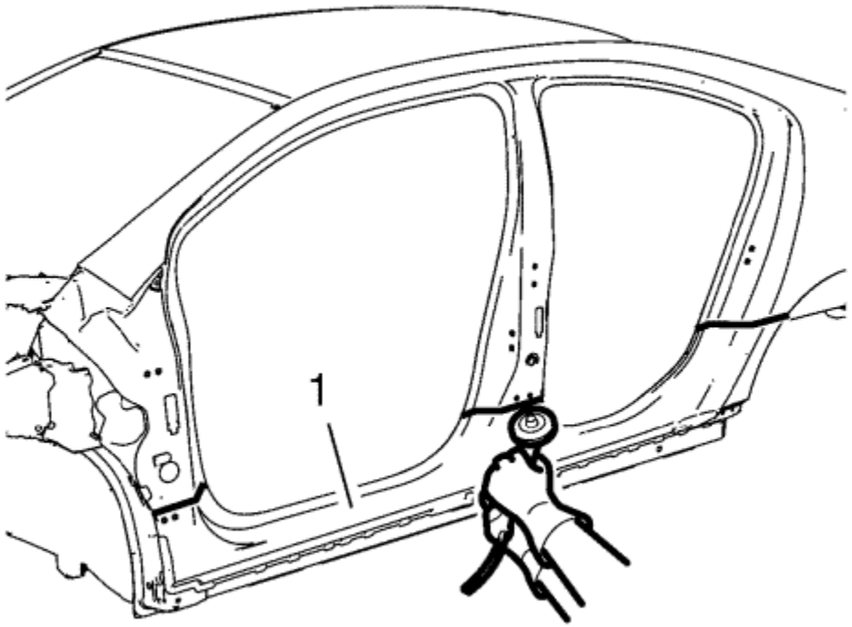

7. Cut the rocker outer panel (1) where the sectioning is to be performed.

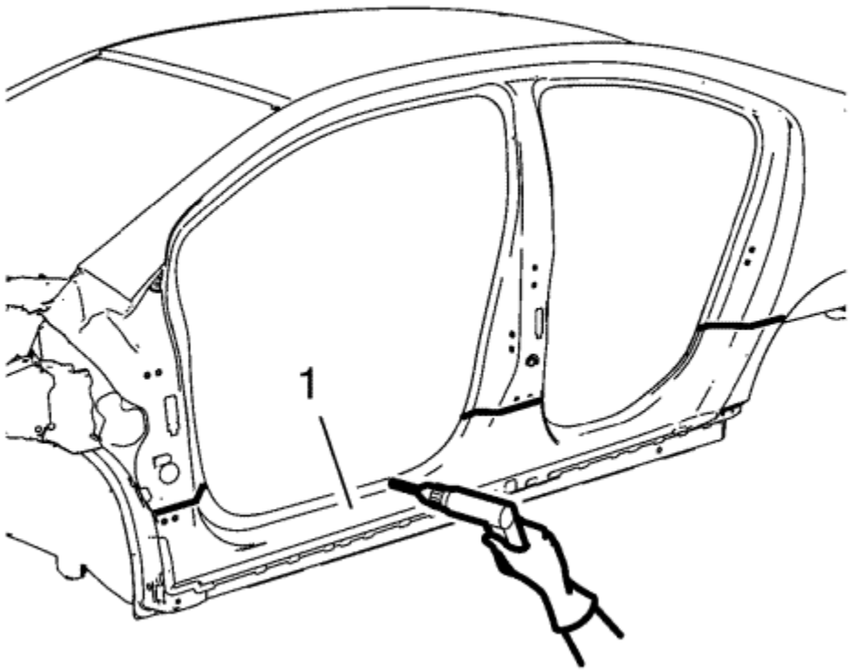

8. Locate and mark all the necessary factory welds of the rocker outer panel (1).
9. Drill all factory welds. Note the number and location of welds for installation of the service assembly.

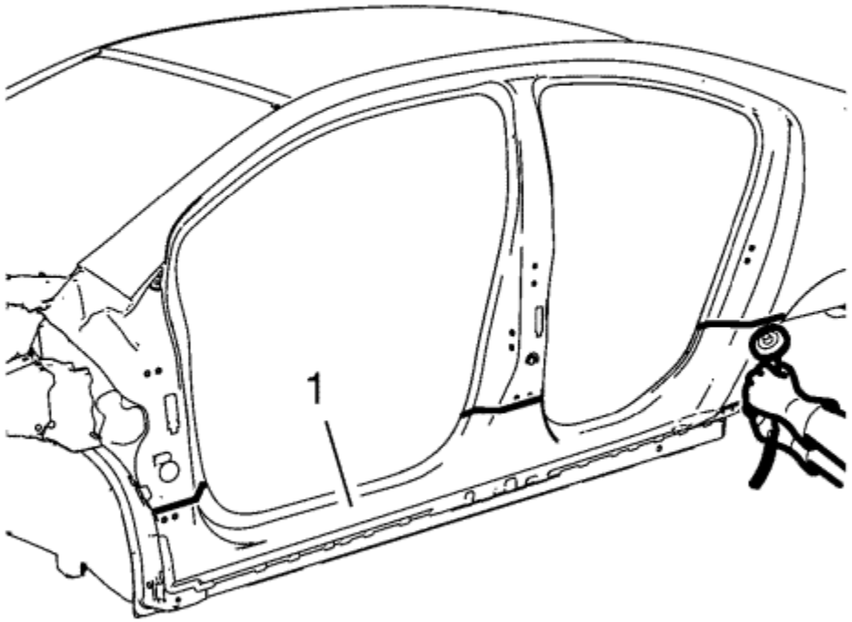

10. Open the wheelhouse flanging of the rocker outer panel (1).

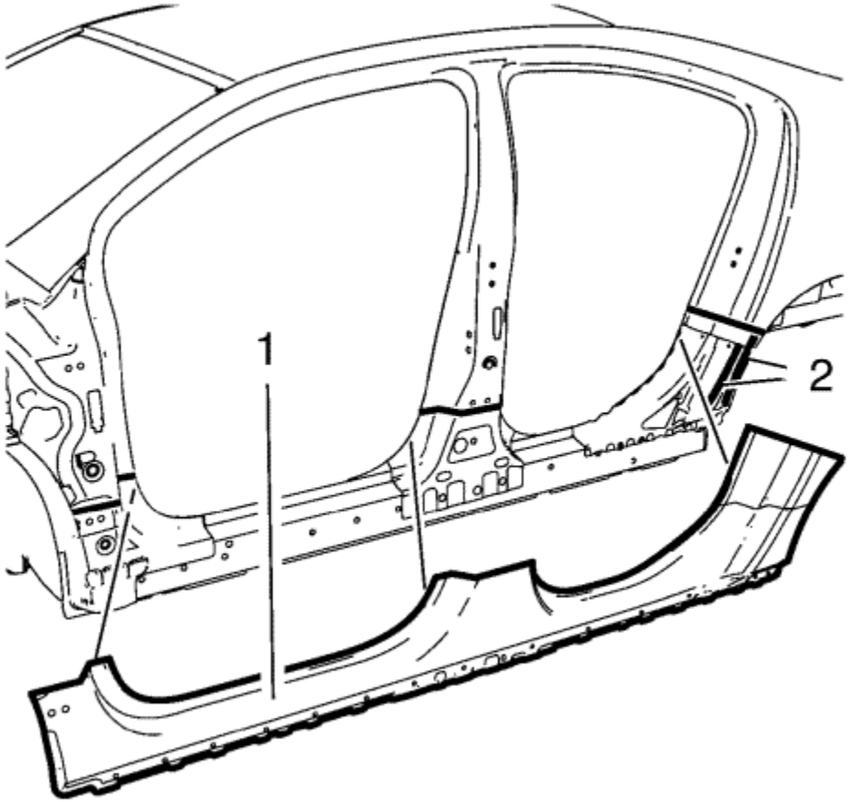

11. Remove the rocker outer panel (1) cut the adhesive (2) with a suitable tool.

Installation Procedure

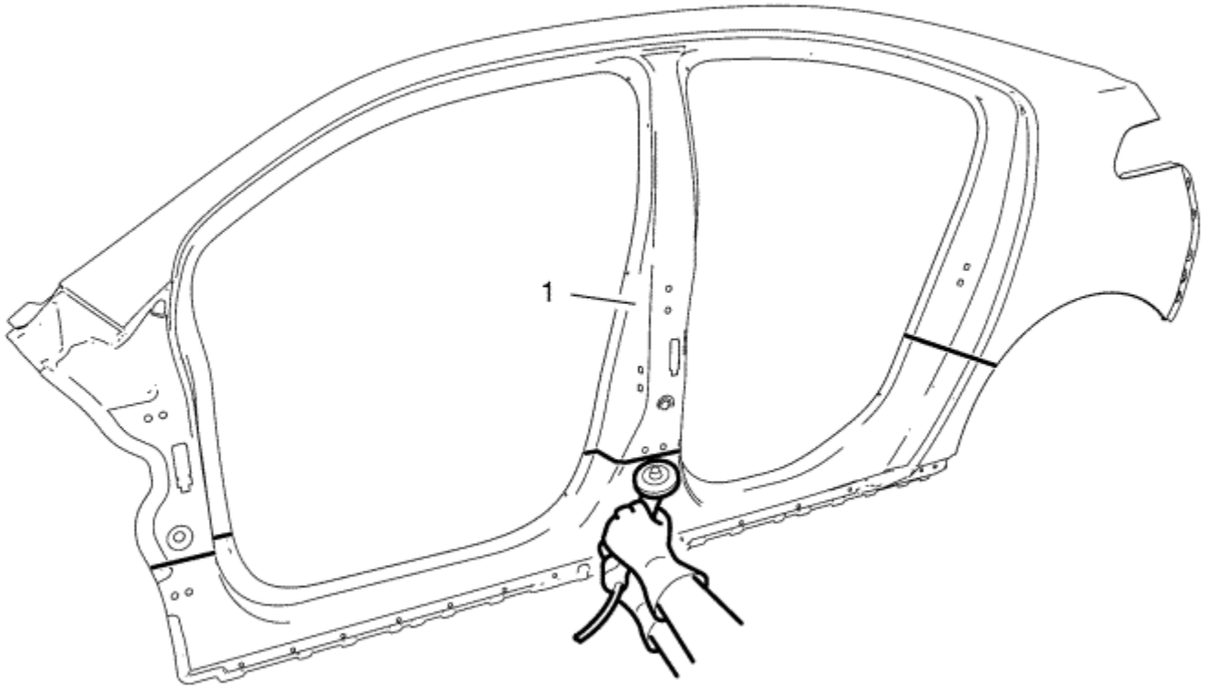

1. Cut the body side outer panel (1) in corresponding locations to fit the remaining original panel. The sectioning joint should be trimmed to allow a gap of one and one half times the metal thickness at the sectioning joint.

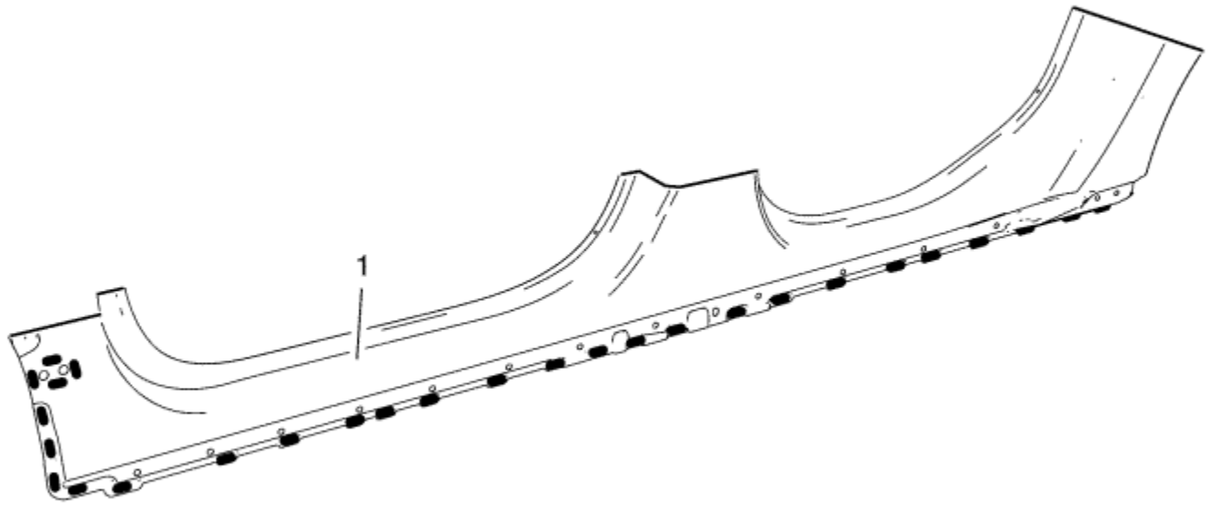

2. Create 28 **5x 8 mm** slots for MIG-brazing to the rocker outer panel (1).
3. Prepare all mating surfaces as necessary.
4. Clean and prepare the attaching surfaces for spot welding and brazing.

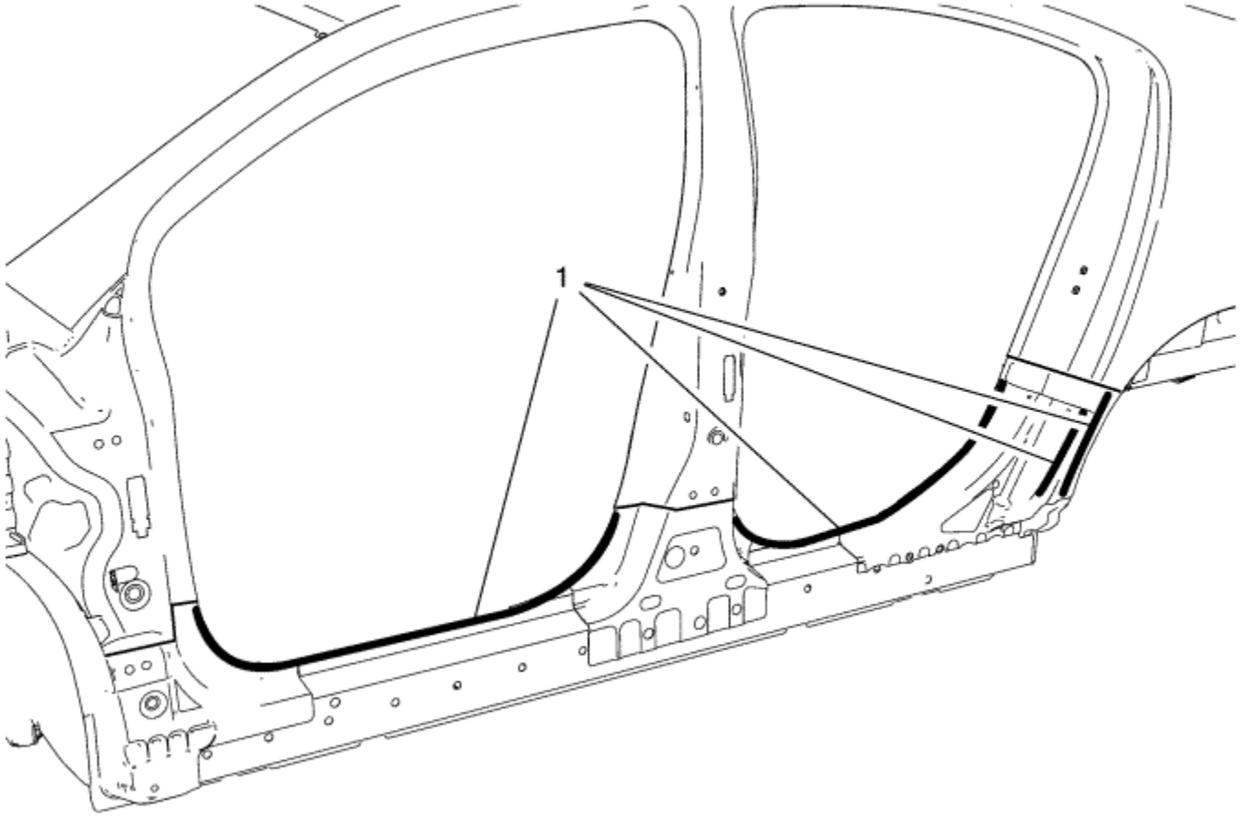

5. Apply structural adhesive (1).

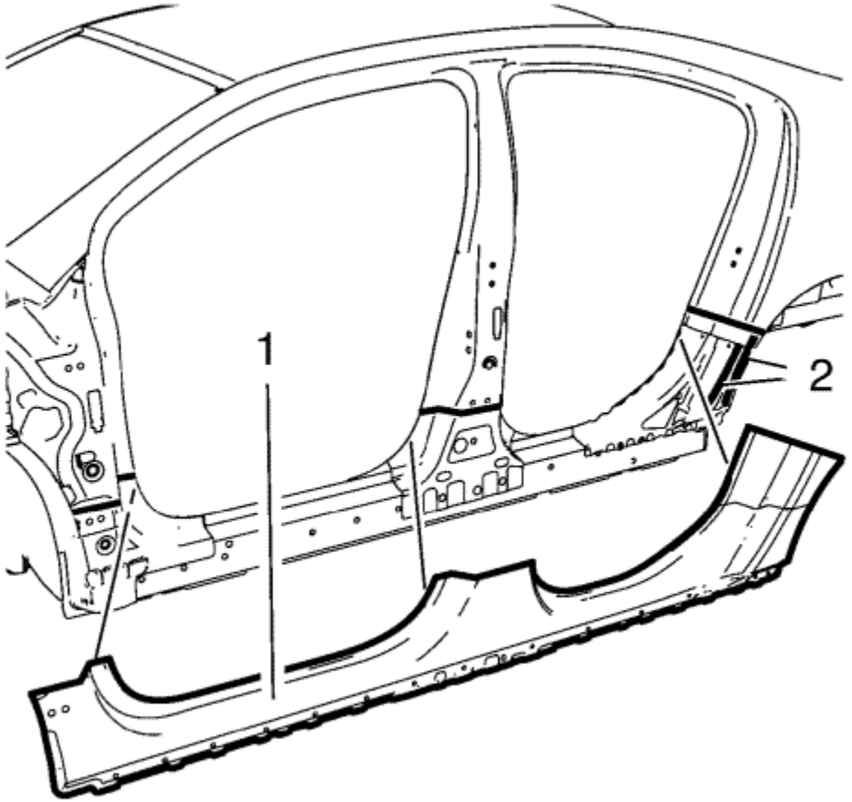

6. Position the rocker outer panel (1) on the vehicle.
7. Verify the fit of the rocker outer panel.
8. Clamp the rocker outer panel into position.

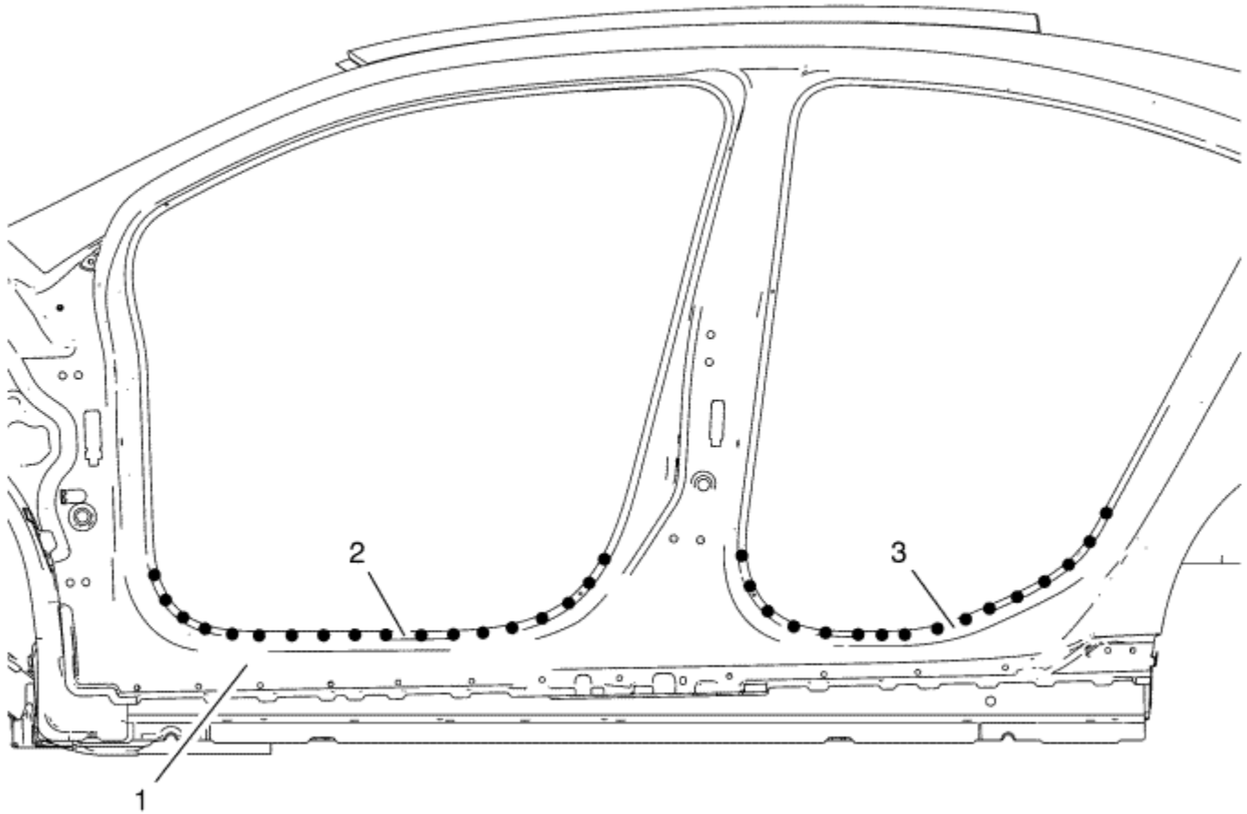

9. Spot weld the rocker outer panel (1) accordingly.
   9.1. Flange front side door opening (2) - 18 spot welds
   9.2. Flange rear side door opening (3) - 16 spot welds

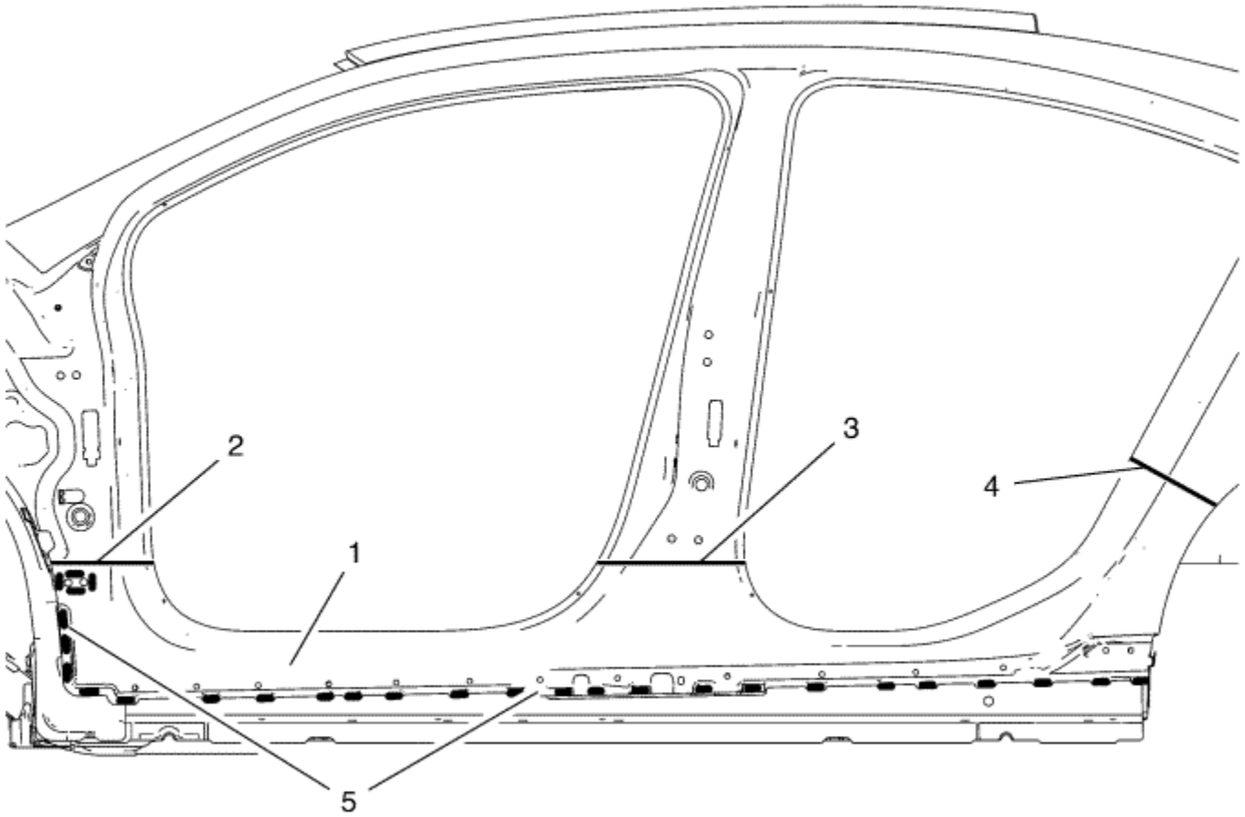

10. Braze the rocker outer panel (1) accordingly.
    10.1. Rocker outer panel / front hinge pillar (2) - **230 mm**
    10.2. Rocker outer panel / centre pillar (3) - **340 mm**
    10.3. Rocker outer panel / quarter outer panel (4) - **300 mm**
    10.4. Rocker outer panel (5) - 28 **5x18 mm** slot brazes
11. To create a solid braze with minimum heat distortion, make **25 mm** stitch brazes along the seam with **25 mm** gaps between them. Then go back and complete the stitch braze.
12. Apply the sealers and anti-corrosion materials to the repair area as necessary.
13. Paint the repaired area.
14. Install all related panels and components.
15. Enable the high voltage system. Refer to High Voltage Enabling .
16. Enable the SIR system. Refer to SIR Disabling and Enabling .

&#169© Copyright Chevrolet. All rights reserved

Body Side Outer Panel Reinforcement Replacement

Removal Procedure

Warning : Refer to Approved Equipment for Collision Repair Warning in the Preface section.

Warning : Refer to Glass and Sheet Metal Handling Warning in the Preface section.

1. Disable the SIR system. Refer to SIR Disabling and Enabling .

   Danger: Always perform the High Voltage Disabling procedure prior to servicing any High Voltage component or connection. Personal Protection Equipment (PPE) and proper procedures must be followed.

   The High Voltage Disabling procedure will perform the following tasks:

   - Identify how to disable high voltage.
   - Identify how to test for the presence of high voltage.
   - Identify condition under which high voltage is always present and personal protection equipment (PPE) and proper procedures must be followed.

   Failure to follow the procedures exactly as written may result in serious injury or death.

2. Disable the high voltage system. Refer to High Voltage Disabling
3. Remove all related panels and components.
4. Visually inspect the damage. Repair as much of the damage as possible.
5. Remove the sealers and anti-corrosion materials from the repair area as necessary.

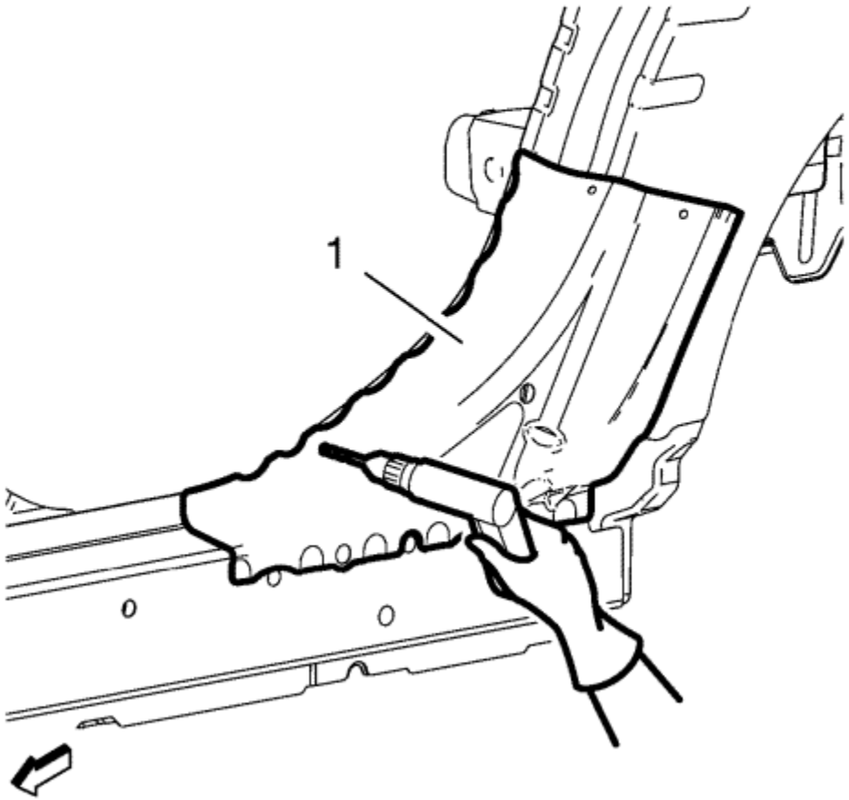

6. Locate and mark all the necessary factory welds of the body side outer panel rear reinforcement (1).
7. Drill all factory welds. Note the number and location of welds for installation of the service assembly.

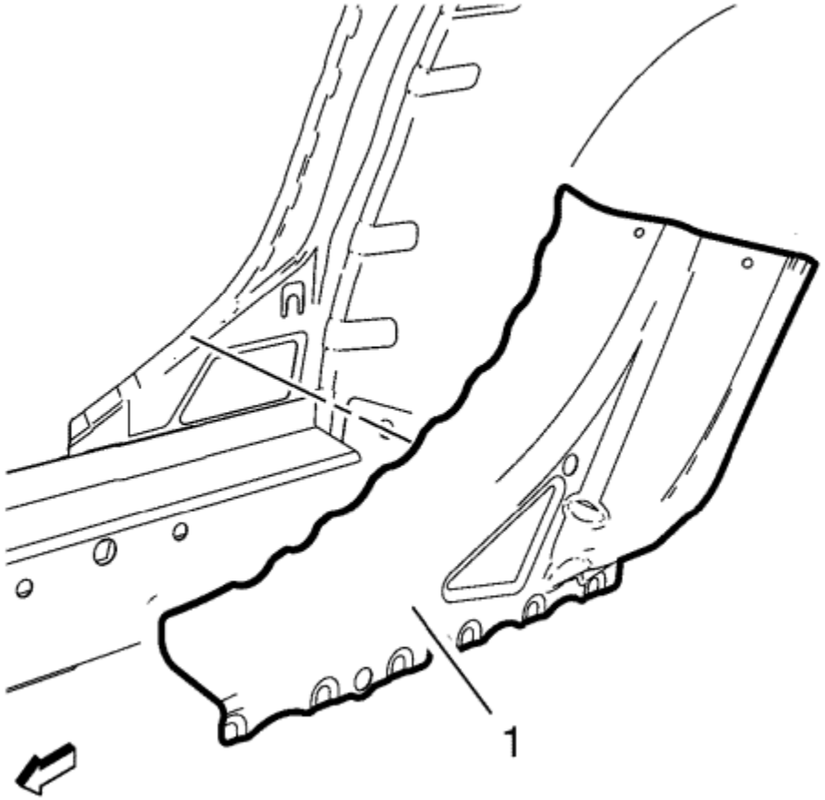

8. Remove the body side outer panel rear reinforcement (1).

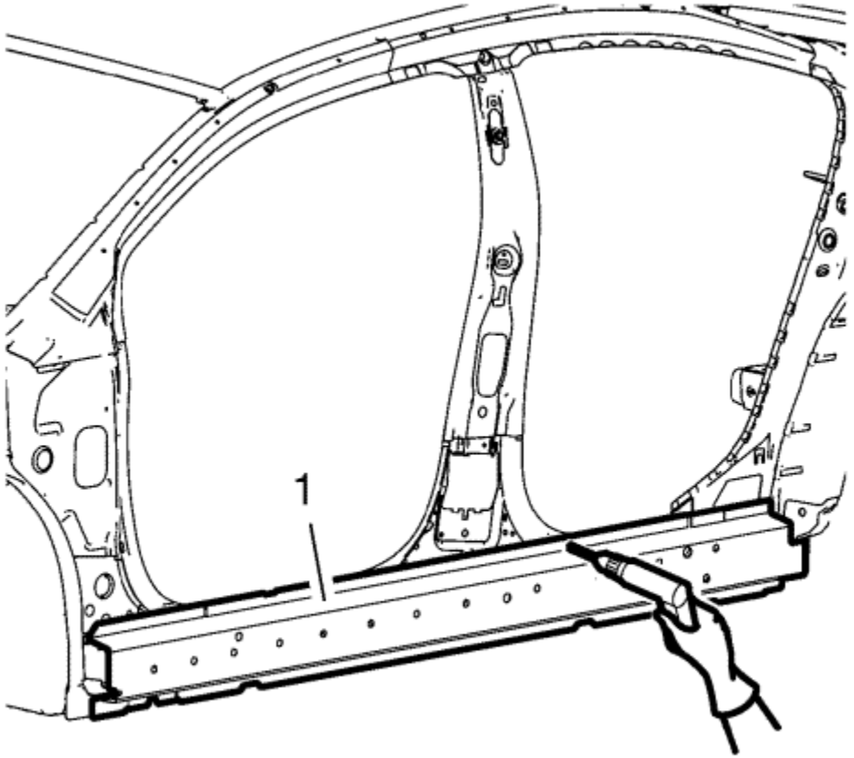

9. Locate and mark all the necessary factory welds of the body side outer panel reinforcement (1).
10. Drill all factory welds. Note the number and location of welds for installation of the service assembly.

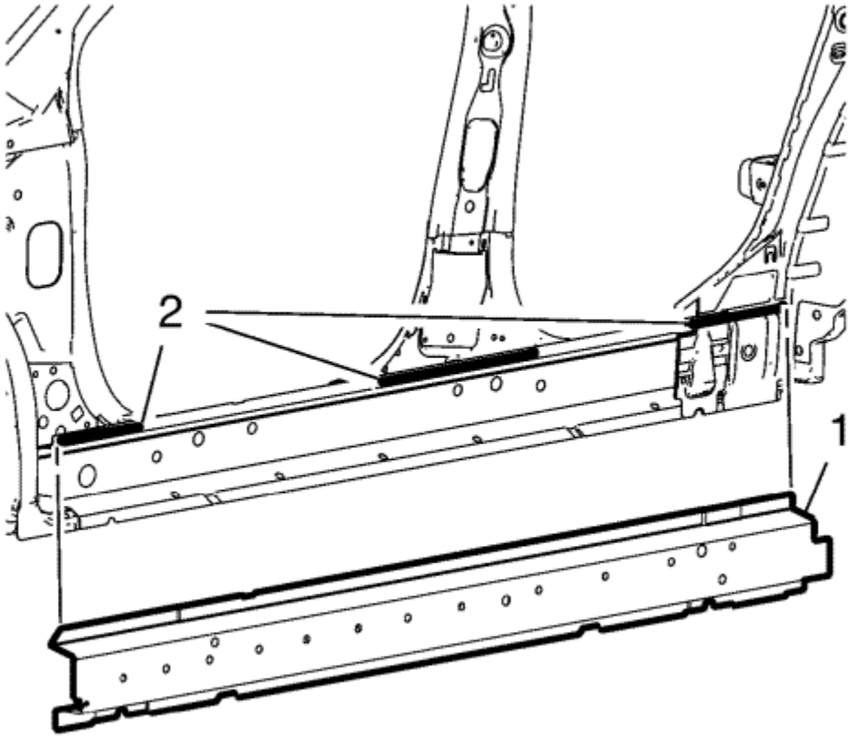

11. To remove the damaged body side outer panel reinforcement (1) cut the adhesive (2) with a suitable tool.

Installation Procedure

1. Prepare all mating surfaces as necessary.
2. Clean and prepare the attaching surfaces for spot welding.

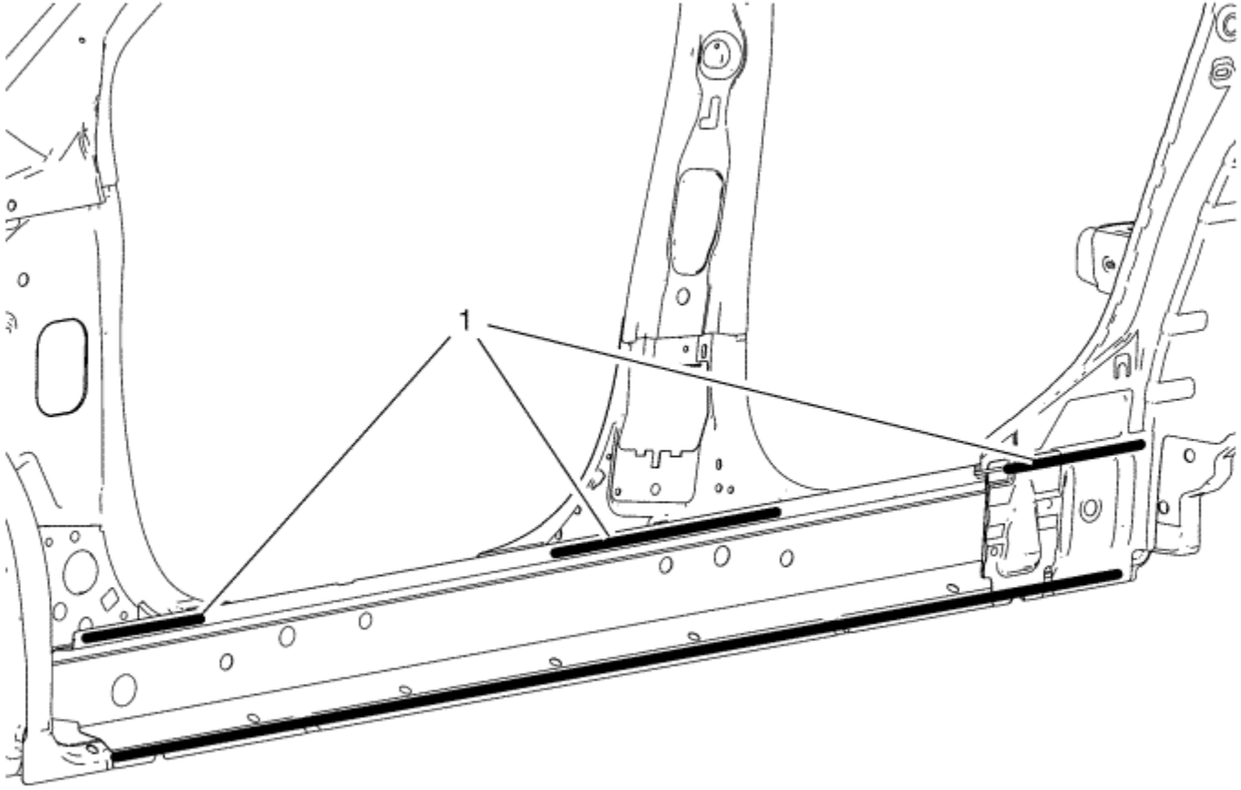

3. Apply structural adhesive (1).

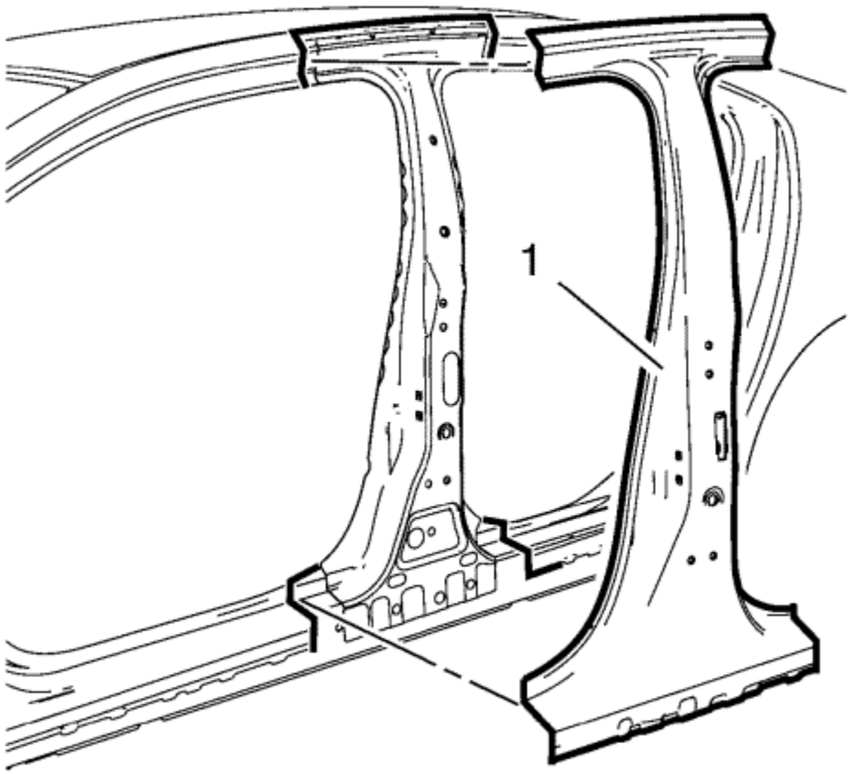

4. Position the body side outer panel reinforcement (1) on the vehicle.
5. Verify the fit of the body side outer panel reinforcement.
6. Clamp the body side outer panel reinforcement into position.

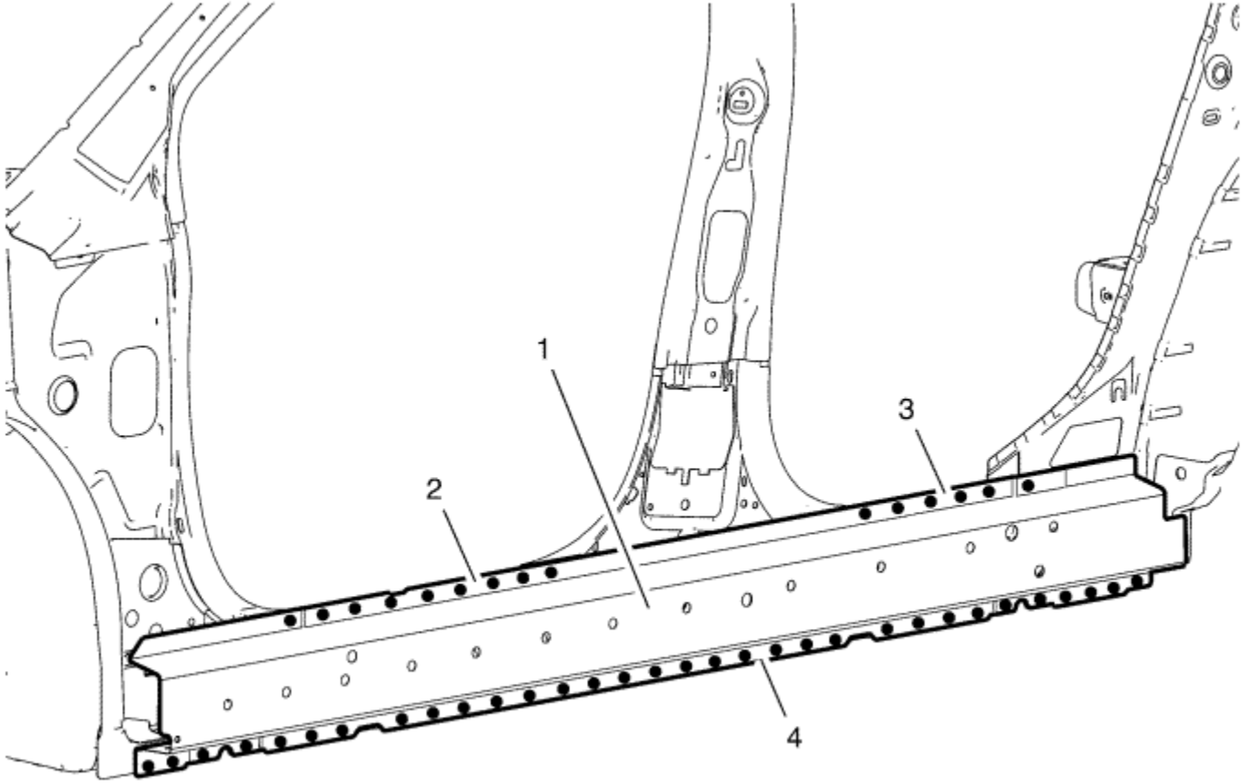

7. Spot weld the body side outer panel reinforcement (1) accordingly.
   7.1. Flange front side door opening (2) - 9 spot welds
   7.2. Flange rear side door opening (3) - 6 spot welds
   7.3. Lower flange (4) - 32 spot welds

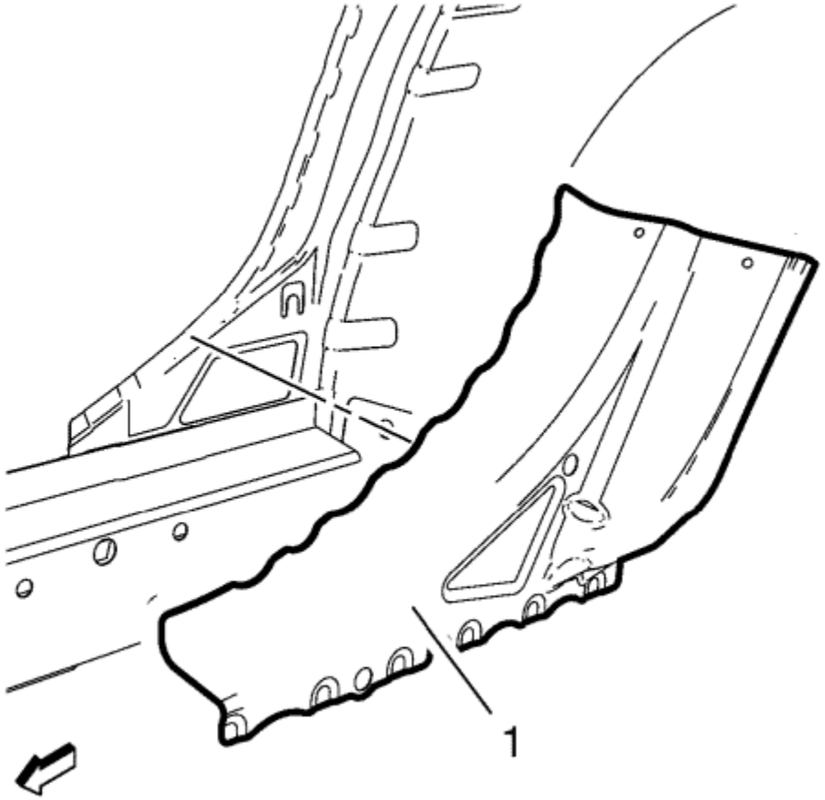

8. Position the body side outer panel rear reinforcement (1) on the vehicle.
9. Verify the fit of the body side outer panel rear reinforcement.
10. Clamp the body side outer panel rear reinforcement into position.

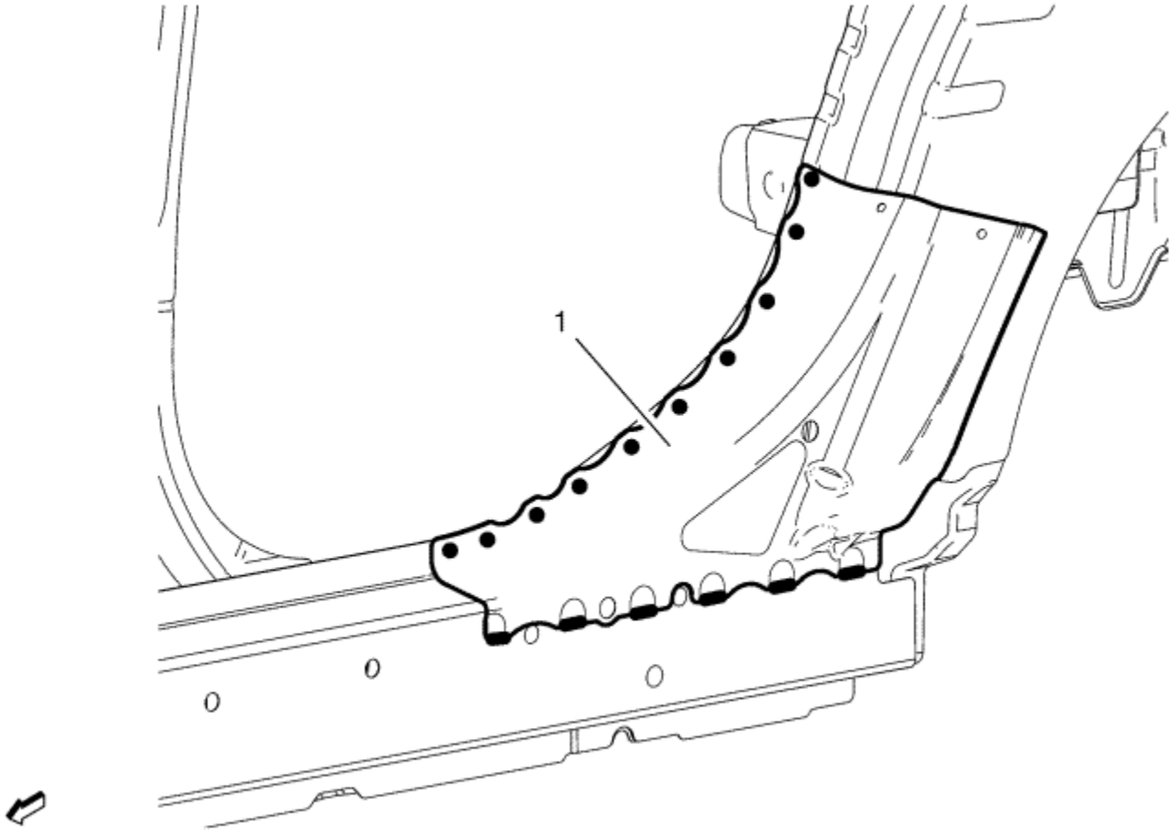

11. Install the body side outer panel rear reinforcement (1) with 10 Spot welds and 6 **10 mm** brazed edge seams accordingly.
12. Apply the sealers and anti-corrosion materials to the repair area as necessary.
13. Paint the repaired area.
14. Install all related panels and components.
15. Enable the high voltage system. Refer to High Voltage Enabling .
16. Enable the SIR system. Refer to SIR Disabling and Enabling .

&#169© Copyright Chevrolet. All rights reserved

Body Side Inner Panel Sectioning

Danger: Always perform the High Voltage Disabling procedure prior to servicing any High Voltage component or connection. Personal Protection Equipment (PPE) and proper procedures must be followed.

The High Voltage Disabling procedure will perform the following tasks:

- Identify how to disable high voltage.
- Identify how to test for the presence of high voltage.
- Identify condition under which high voltage is always present and personal protection equipment (PPE) and proper procedures must be followed.

Before working on any high voltage system, be sure to wear the following Personal Protection Equipment:

- Safety glasses with appropriate side shields when within 15 meters (50 feet) of the vehicle, either indoors or outdoors.
- Certified and up-to-date Class "0" Insulation gloves rated at 1000V with leather protectors.
  - Visually and functionally inspect the gloves before use.
  - Wear the Insulation gloves with leather protectors at all times when working with the high voltage battery assembly, whether the system is energised or not.

Failure to follow the procedures exactly as written may result in serious injury or death.

Removal Procedure

Warning : Refer to Approved Equipment for Collision Repair Warning in the Preface section.

Warning : Refer to Collision Sectioning Warning in the Preface section.

Warning : Refer to Glass and Sheet Metal Handling Warning in the Preface section.

1. Disable the SIR system. Refer to SIR Disabling and Enabling .
2. Inspect the high voltage system. Refer to High Voltage System Inspection .
3. Remove all related panels and components.
4. Visually inspect the damage. Repair as much of the damage as possible.
5. Remove the sealers and anti-corrosion materials from the repair area, as necessary. Refer to Anti-Corrosion Treatment and Repair .
6. Section quarter outer panel. Refer to Quarter Outer Panel Sectioning .

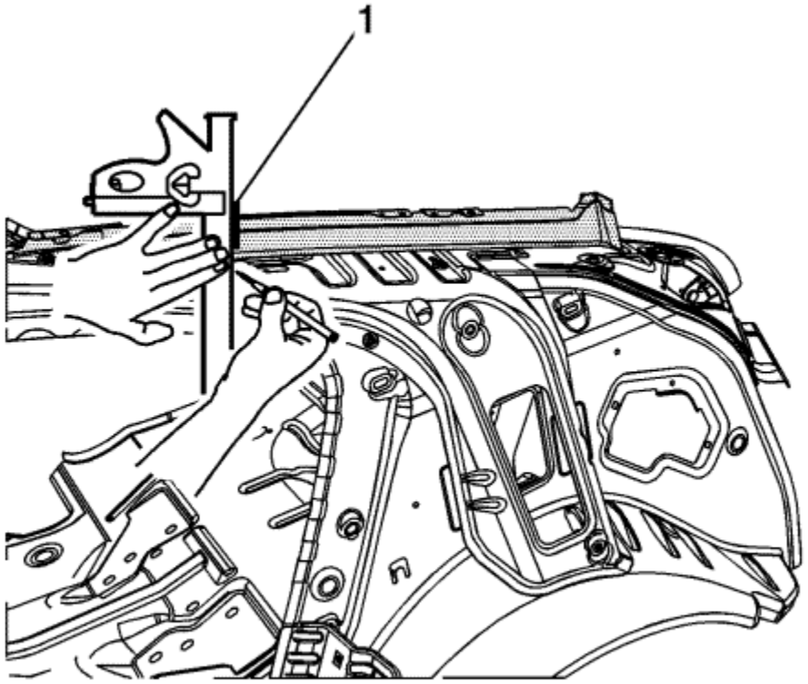

7. Create section line (1) on the quarter panel extension.

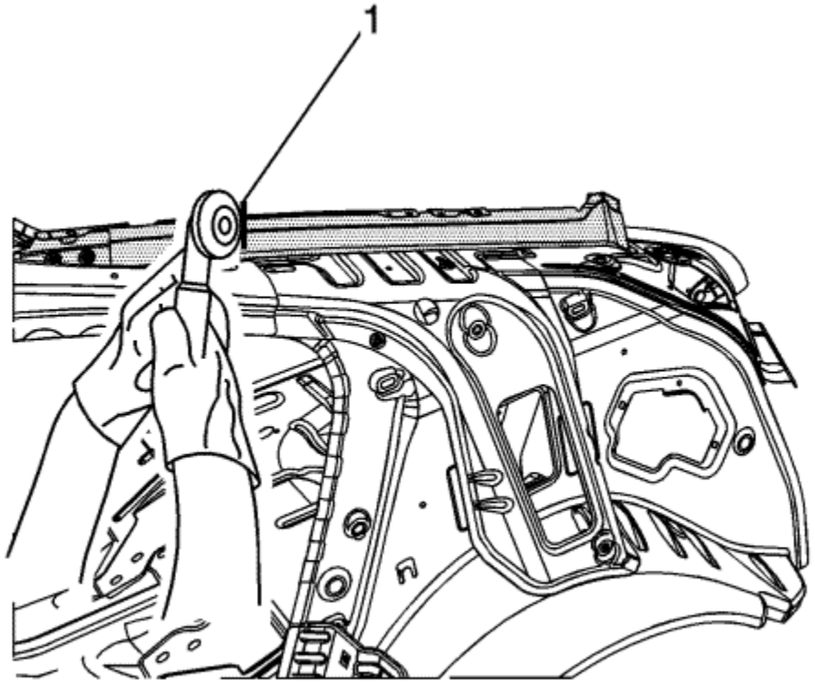

8. Cut the panel at the section joint (1).

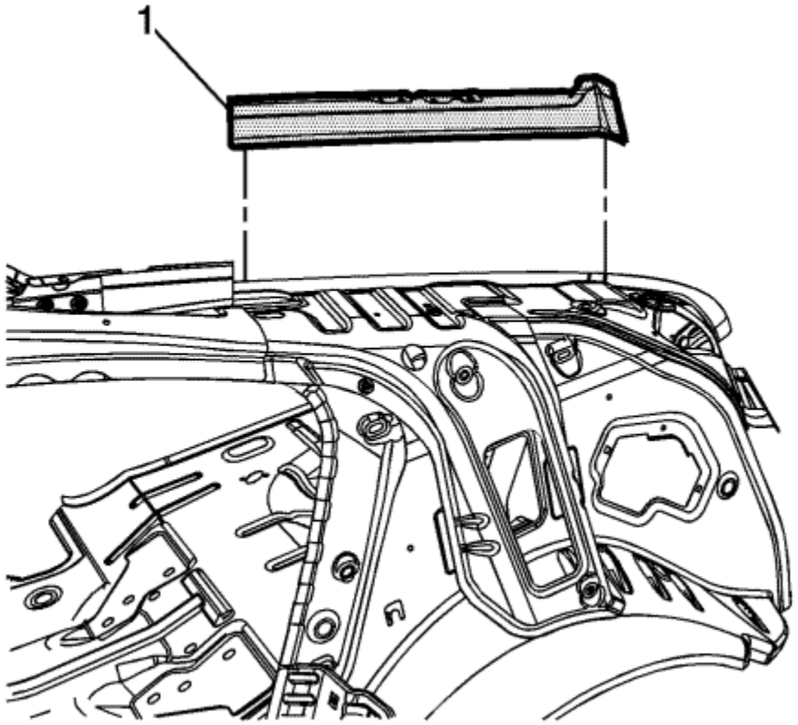

Note: use a heat gun to facilitate removal in areas where structural adhesive is present.

9. Remove quarter panel extension (1).

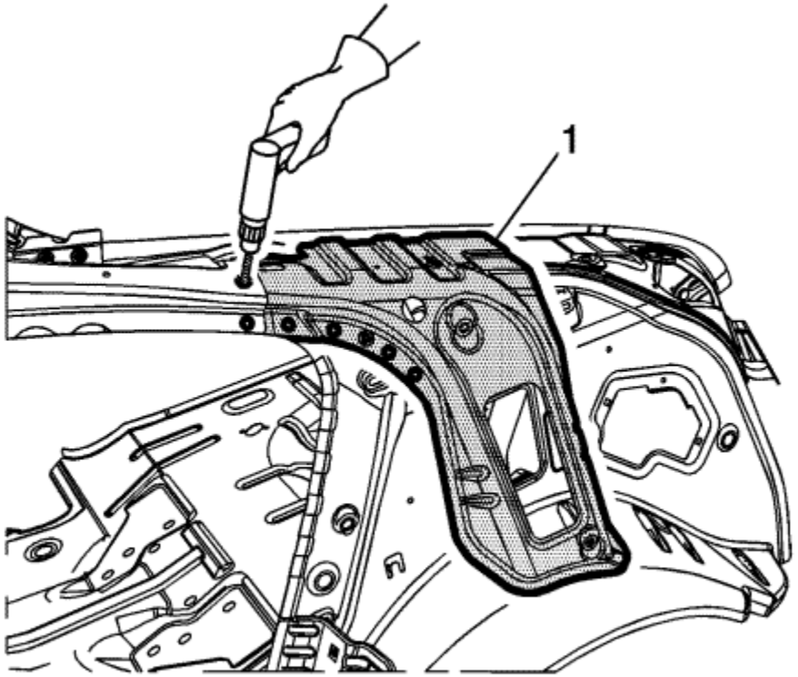

10. Locate and drill factory welds on the body lock pillar upper reinforcement (1). Note the number and location of welds for installation.

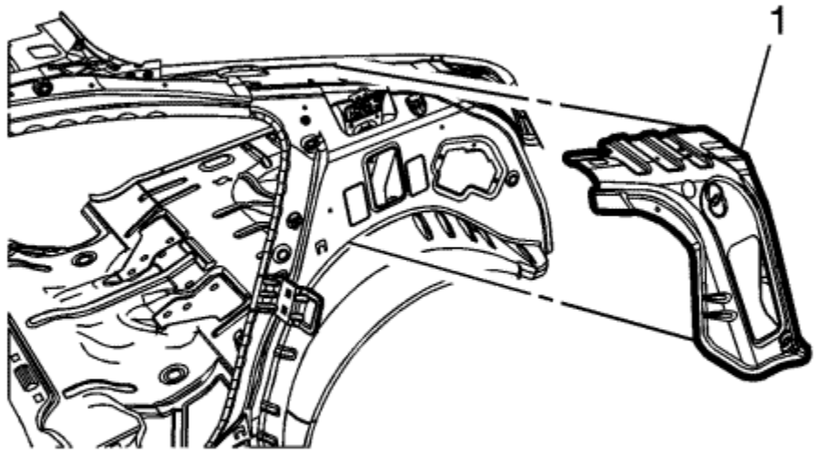

11. Remove reinforcement (1) from quarter inner panel.

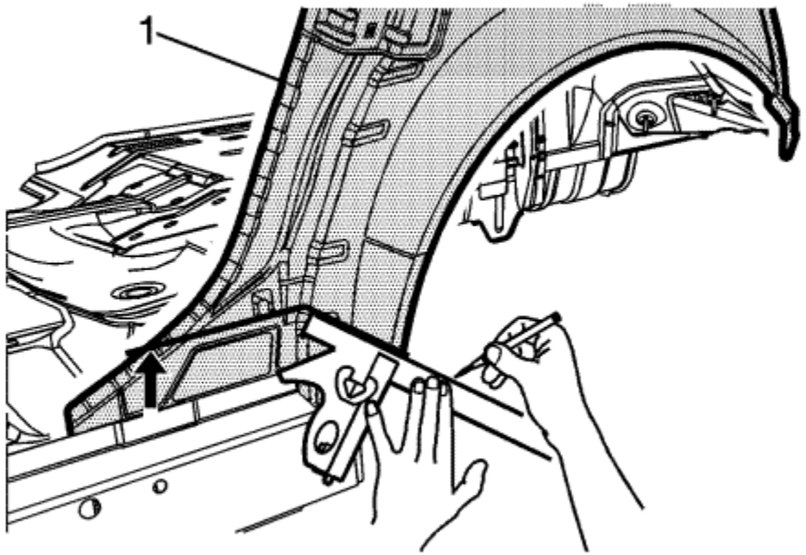

Note : Do not damage any other panels or reinforcements.

12. Create a cut line on the body side inner panel (1) **60 mm (2.35 in)** above the rocker outer panel flange.

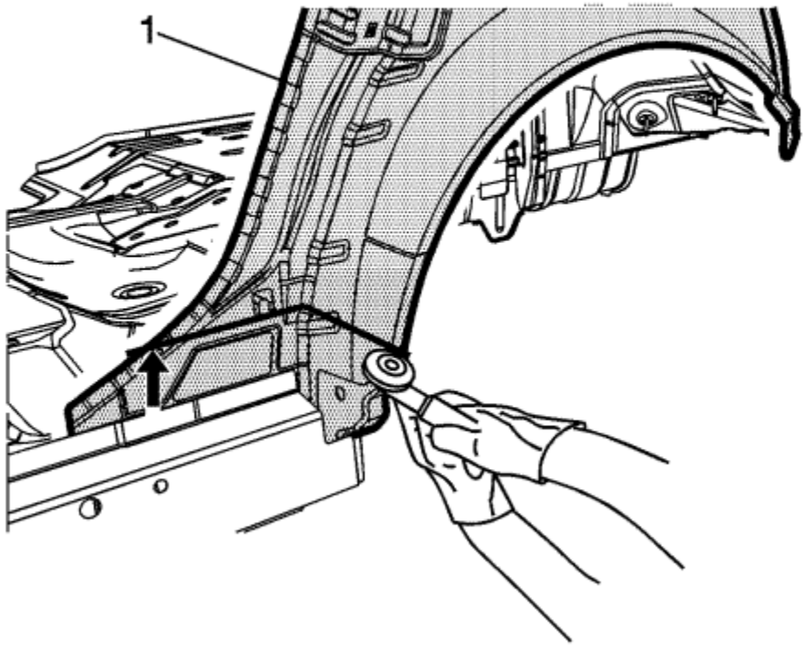

13. Cut the body side inner panel (1) where sectioning is to be performed.

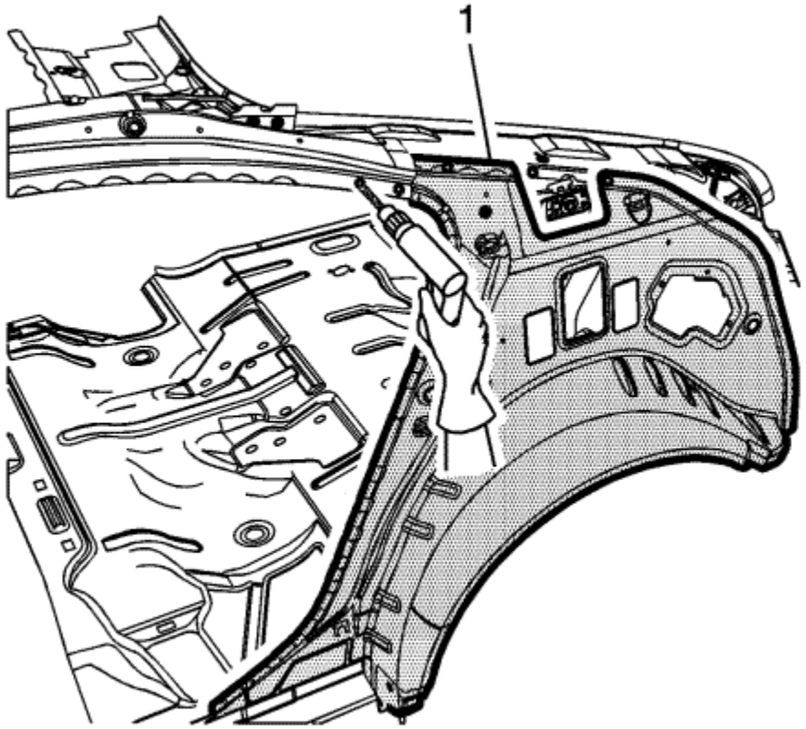

14. Locate and drill out all factory welds on the body side inner panel (1). Note the number and location of the welds for installation of the service assembly.

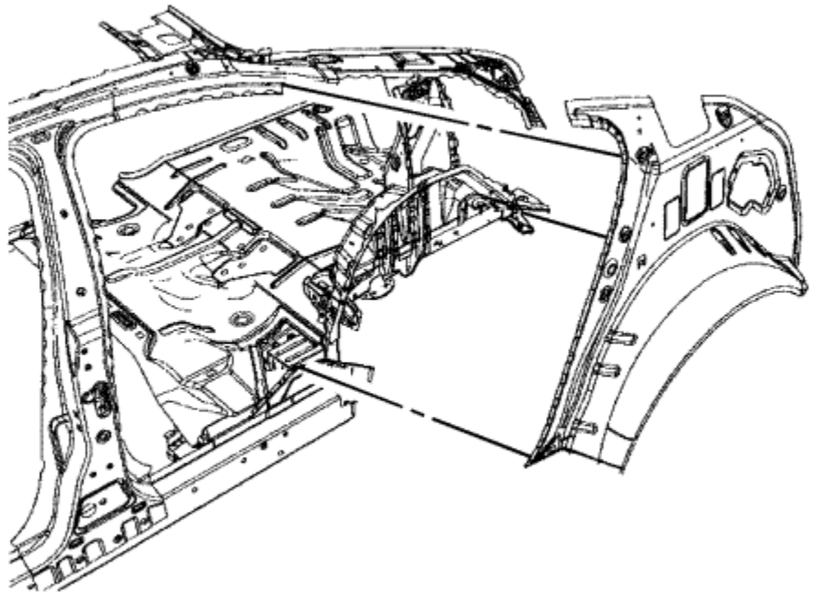

15. Remove the damaged body side inner panel (1).

Installation Procedure

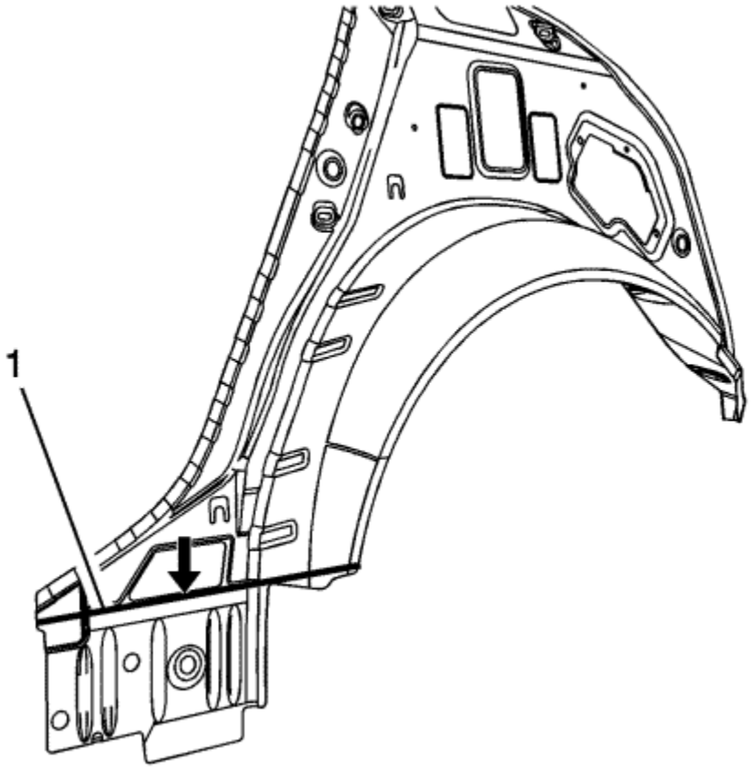

1. Cut the body side inner service assembly **65 mm (2.5 in)** longer at the sectioned joint (1). It should overlap the remaining portion of the original panel.

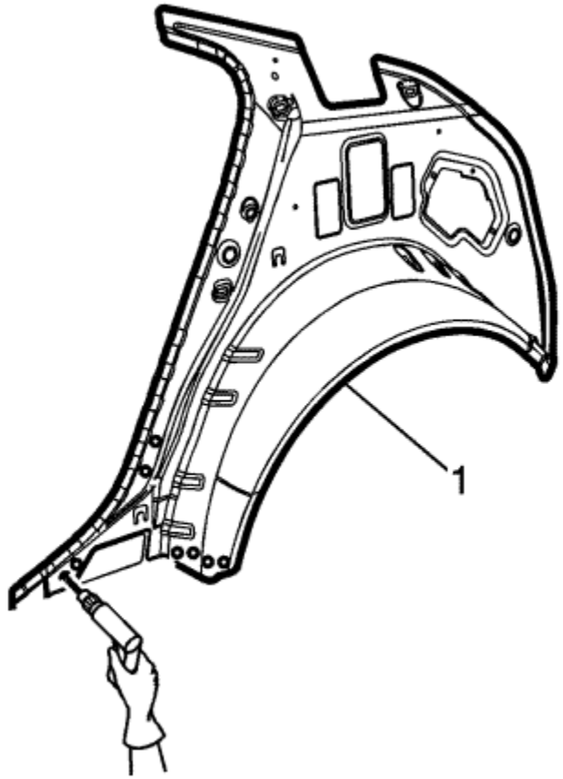

2. Drill **8 mm (5/16 in)** plug weld holes in the service part (1), as necessary, in the corresponding locations noted on the original panel and along sectioned joint.
3. Prepare all mating surfaces as necessary.
4. Apply GM-approved Weld-Thru Coating or equivalent to all mating surfaces. Refer to Anti-Corrosion Treatment and Repair .

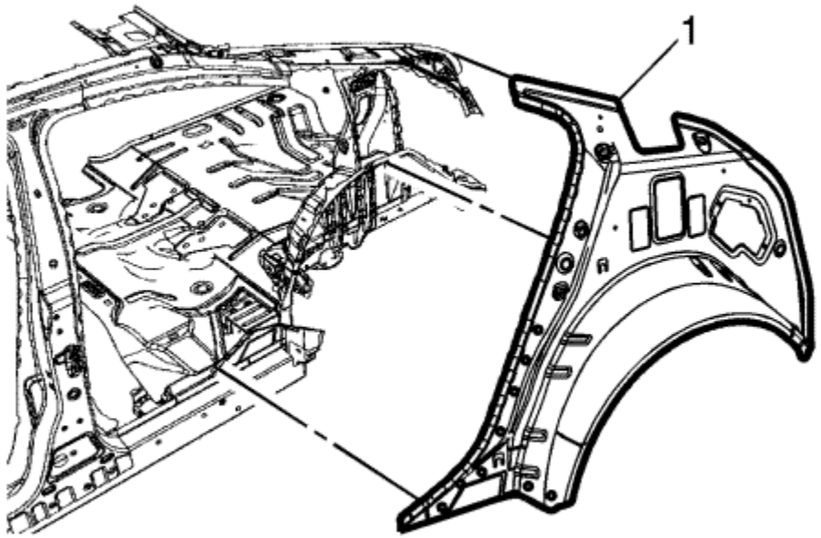

5. Position the quarter inner panel (1) to the vehicle using 3-dimensional measuring equipment. Clamp the panel in place.

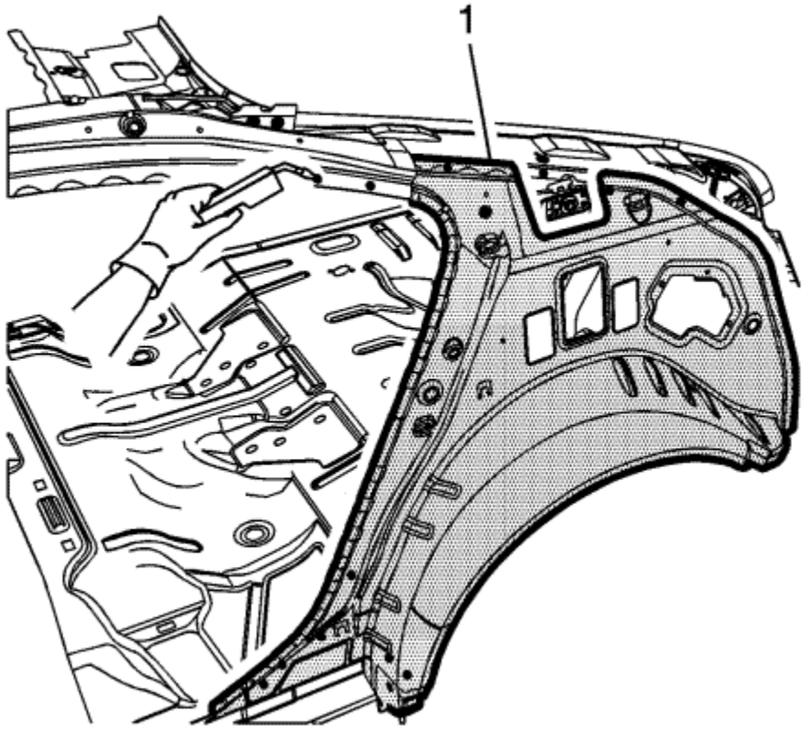

6. Plug weld the body side inner panel (1) accordingly.

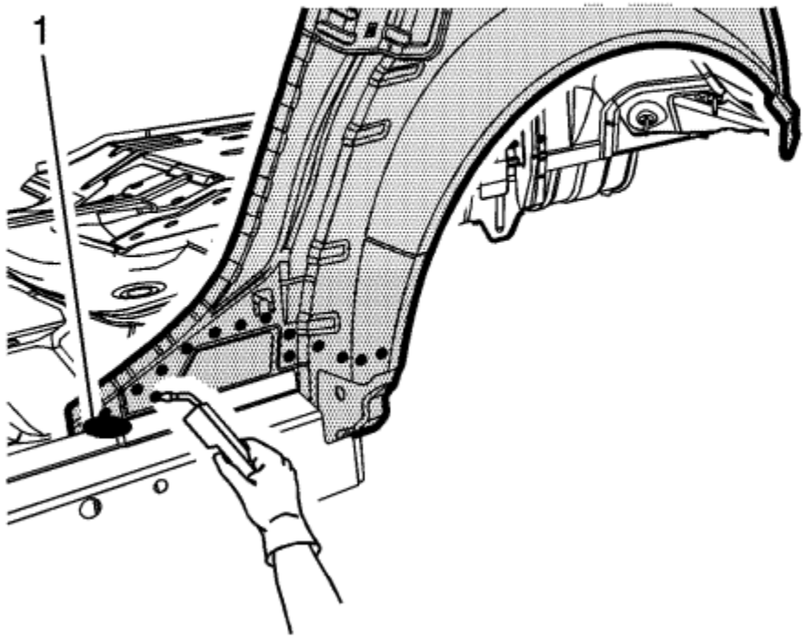

7. To create a solid weld with minimum heat distortion, make **25 mm (1 in)** stitch welds along the seam (1) with **25 mm (1 in)** gaps between them. Then go back and complete the stitch weld.
8. Prepare all mating surfaces as necessary.

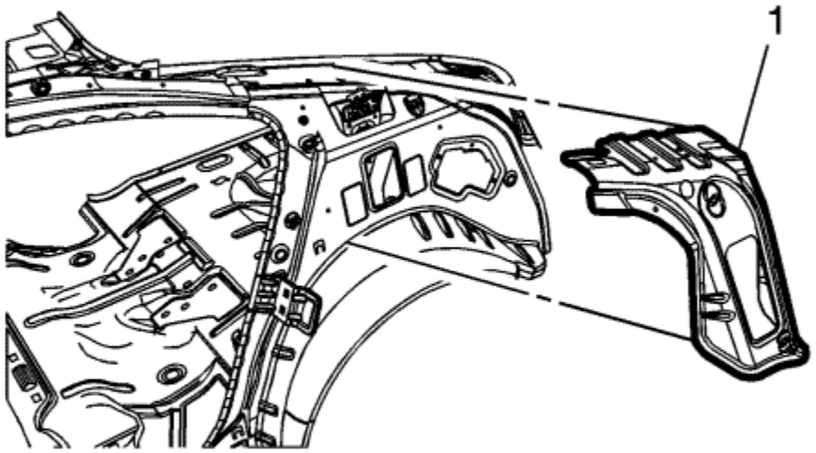

9. Position the body lock pillar upper reinforcement (1) to the vehicle using 3-dimensional measuring equipment. Clamp the panel in place.
10. Clean and prepare the attaching surfaces for welding.

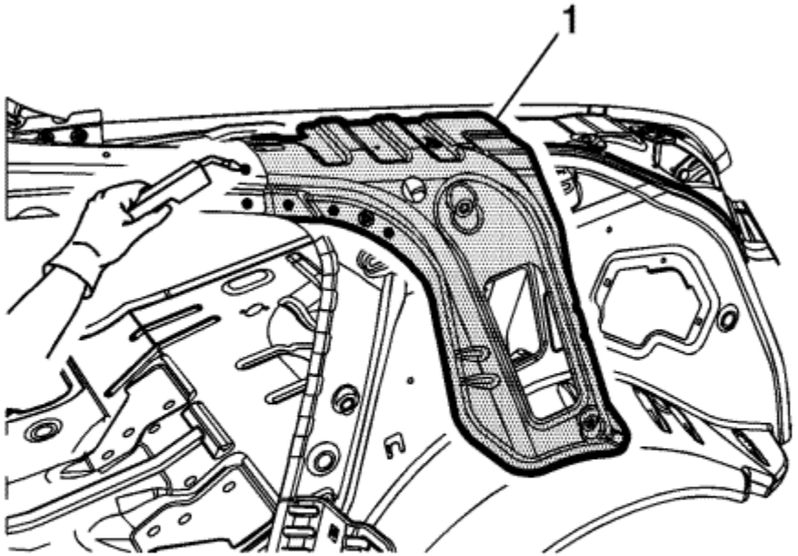

11. Plug weld the body lock pillar upper reinforcement (1) accordingly.

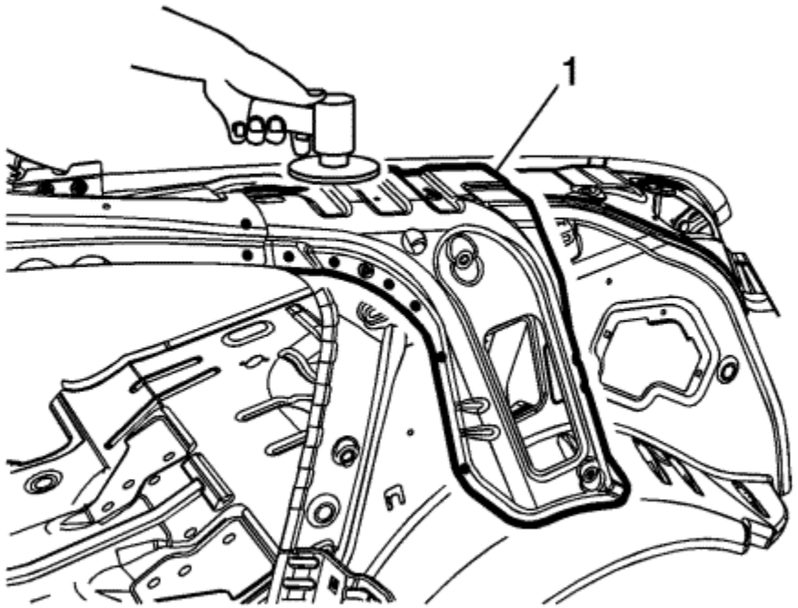

12. Grind to bare metal in areas (1) where structural adhesive was present on both attaching parts.

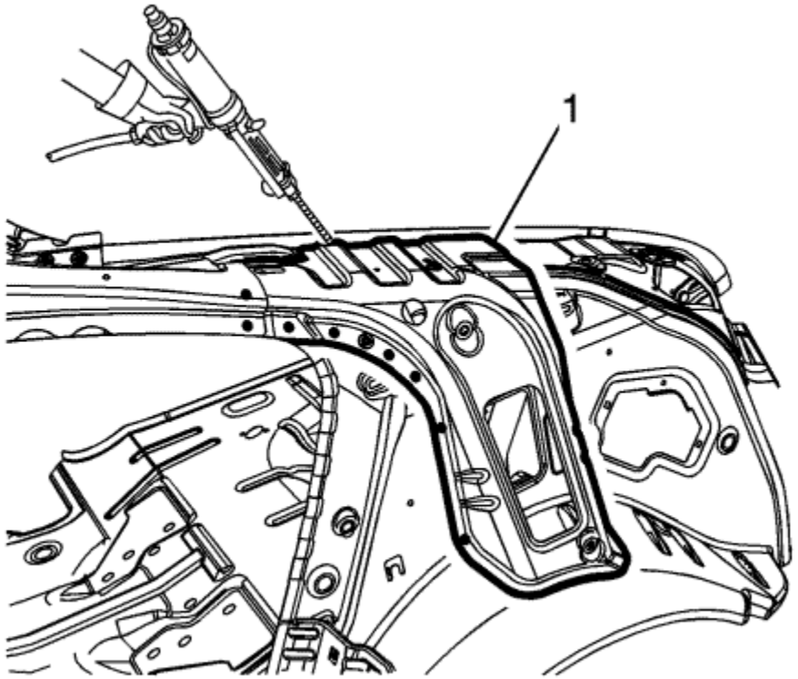

Note : The adhesive has a 40-50 minute working time.

13. Apply a **3-6 mm (1/8-1/4 in)** bead of metal panel bonding adhesive (1) or equivalent, to both of the mating surfaces (1) to attach quarter panel extension.
14. Using a small brush, spread a coat of adhesive to cover all the bare metal surfaces to ensure corrosion protection.

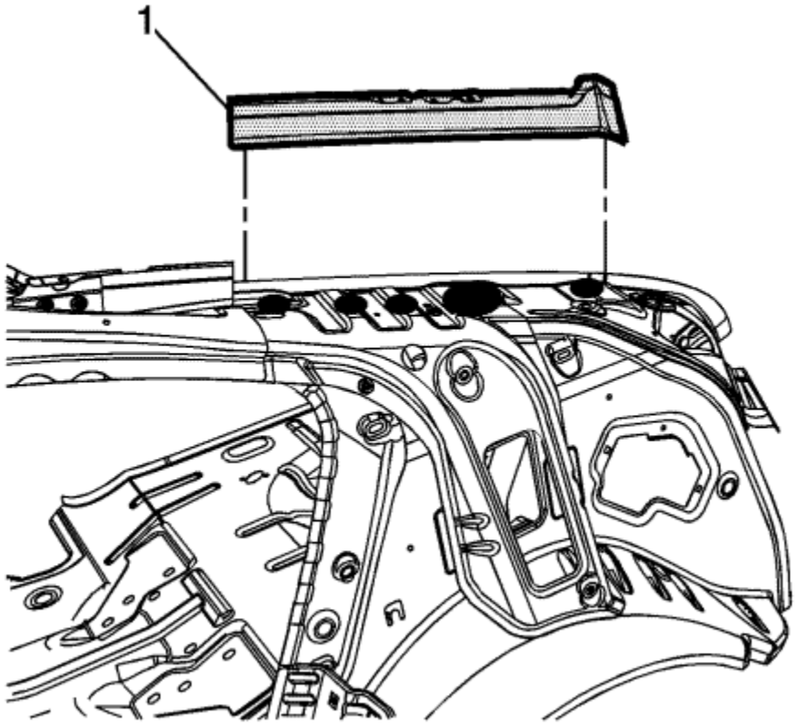

15. Position the quarter panel extension (1) to the vehicle using 3-dimensional measuring equipment. Clamp the panel in place. If adjustments are needed, slide the panels to realign. Do not pull apart.

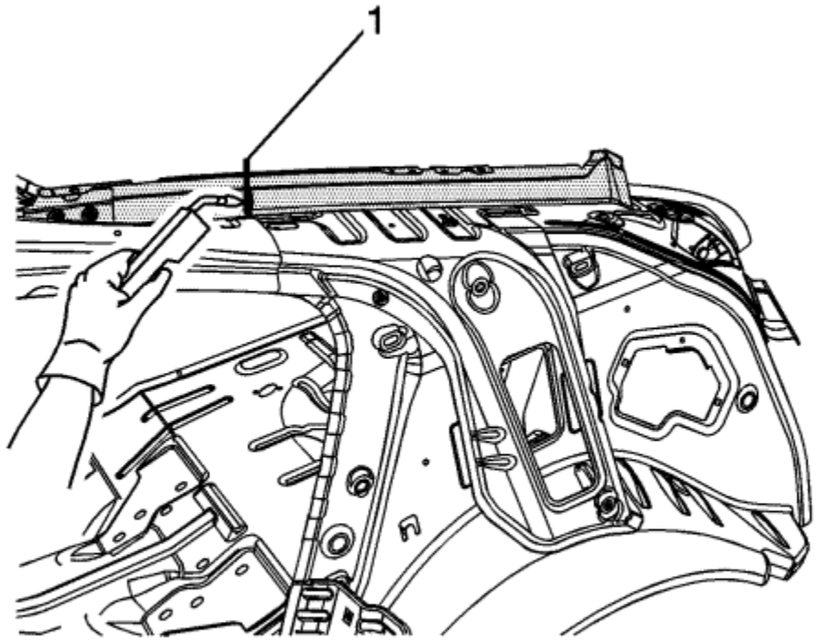

16. To create a solid weld with minimum heat distortion, make **25 mm (1 in)** stitch welds along the seam (1) with **25 mm (1 in)** gaps between them. Then go back and complete the stitch weld.
17. Prepare all mating surfaces as necessary.
18. Apply the sealers and anti-corrosion materials to the repair area, as necessary. Refer to Anti-Corrosion Treatment and Repair .
19. Complete sectioning quarter panel outer. Refer to Quarter Outer Panel Sectioning .
20. Prepare all mating surfaces as necessary.
21. Apply the sealers and anti-corrosion materials to the repair area, as necessary. Refer to Anti-Corrosion Treatment and Repair .
22. Paint the repaired area. Refer to Basecoat/Clearcoat Paint Systems .
23. Install all related panels and components.
24. If disabled, enable the high voltage system. Refer to High Voltage Enabling .
25. Enable the SIR system. Refer to SIR Disabling and Enabling .

&#169© Copyright Chevrolet. All rights reserved

Rear Compartment Floor Panel Sectioning

Danger: Always perform the High Voltage Disabling procedure prior to servicing any High Voltage component or connection. Personal Protection Equipment (PPE) and proper procedures must be followed.

The High Voltage Disabling procedure will perform the following tasks:

- Identify how to disable high voltage.
- Identify how to test for the presence of high voltage.
- Identify condition under which high voltage is always present and personal protection equipment (PPE) and proper procedures must be followed.

Before working on any high voltage system, be sure to wear the following Personal Protection Equipment:

- Safety glasses with appropriate side shields when within 15 meters (50 feet) of the vehicle, either indoors or outdoors.
- Certified and up-to-date Class "0" Insulation gloves rated at 1000V with leather protectors.
  - Visually and functionally inspect the gloves before use.
  - Wear the Insulation gloves with leather protectors at all times when working with the high voltage battery assembly, whether the system is energised or not.

Failure to follow the procedures exactly as written may result in serious injury or death.

Removal Procedure

Warning : Refer to Approved Equipment for Collision Repair Warning in the Preface section.

Warning : Sectioning should be performed only in the recommended areas. Failure to do so may compromise the structural integrity of the vehicle and cause personal injury if the vehicle is in a collision.

1. Disable the SIR system. Refer to SIR Disabling and Enabling .
2. Inspect the high voltage system. Refer to High Voltage System Inspection .

Note :

- The rear floor-pan service part comes as a pre-sectioned assembly. Make sure to follow these steps to prevent unnecessary repairs to the vehicle.
- In areas where structural adhesive is present, use heat to facilitate removal of the components.

3. Remove all related panels and components.
4. Remove the sealers and anti-corrosion materials from the repair area, as necessary. Refer to Anti-Corrosion Treatment and Repair .

5. Repair as much of the damaged area as possible. Refer to Dimensions - Body .

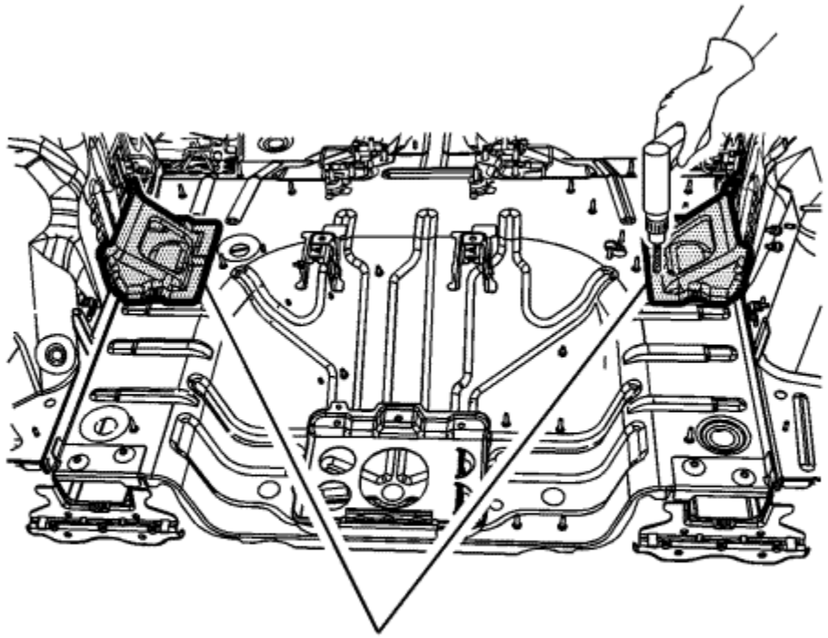

6. Locate welds, drill and remove wheelhouse inner braces (1).

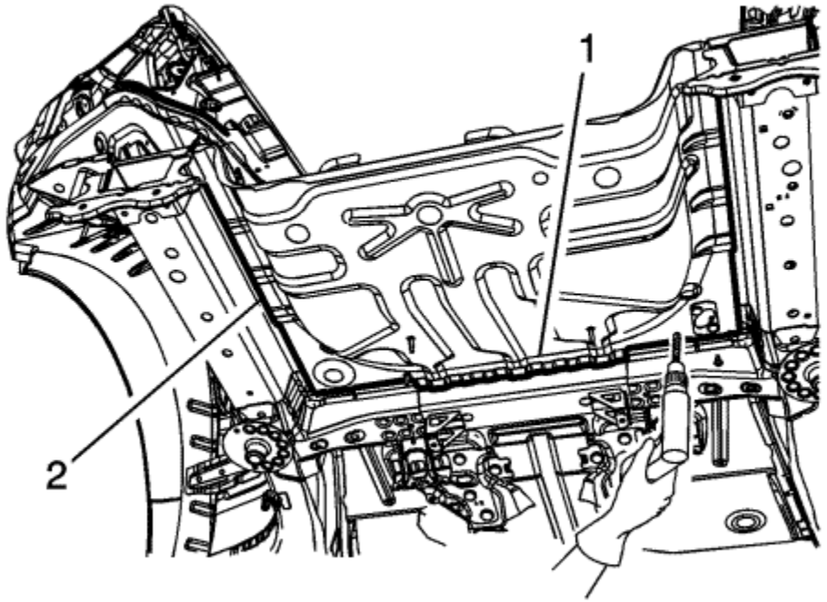

7. Locate the rear edge of cross bar No. 5 (1) and inside edge of the frame rails (2) from under the vehicle.
8. Drill several 1/8 in holes in the floor pan only along the rear edge of cross bar No. 5 and inside frame rails. This will help to identify the location from the top side of the floor pan.

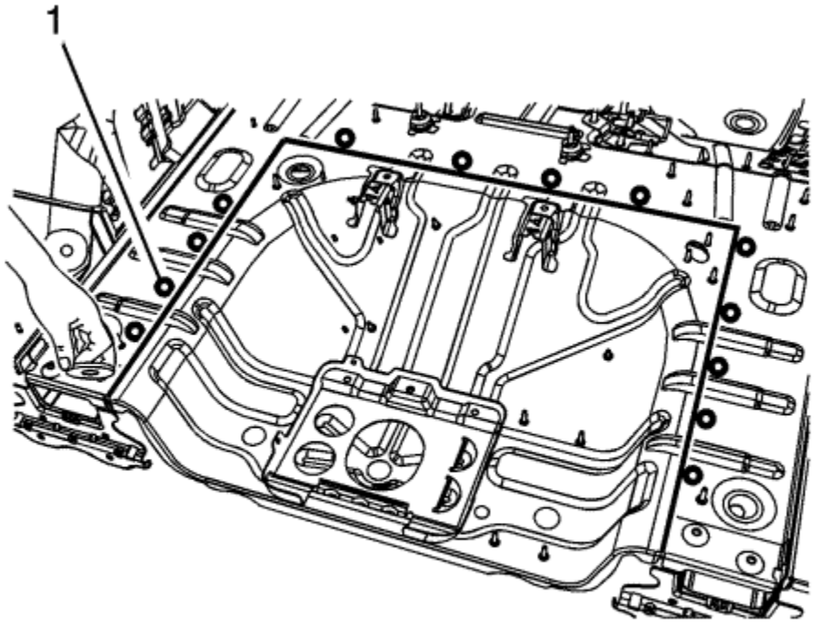

9. Apply a piece of masking tape to the top surface of the rear compartment panel along the holes (1) drilled in the floor pan.

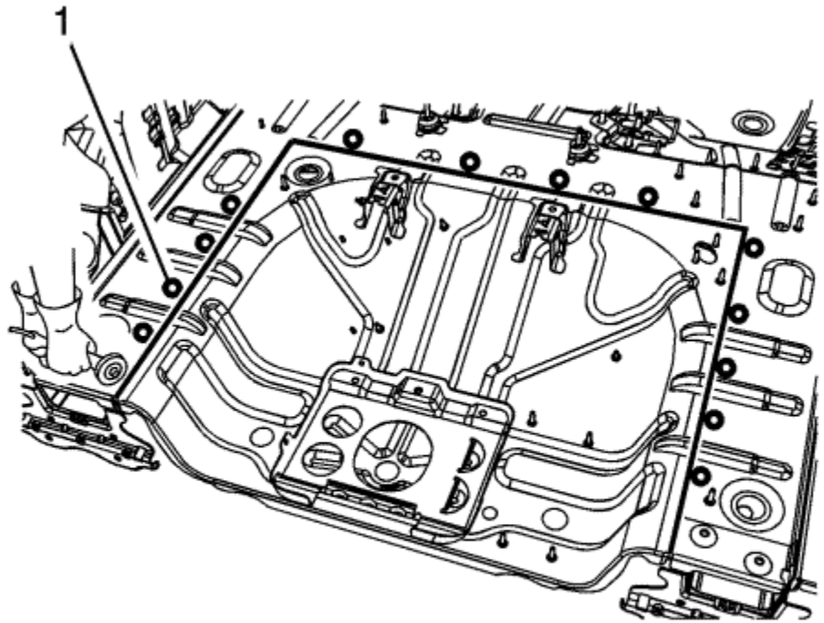

Note : Do not damage any adjacent panels or components when cutting or drilling out spot welds.

10. Cut slightly rearward of the tape along the holes (1) drilled in the floor pan.

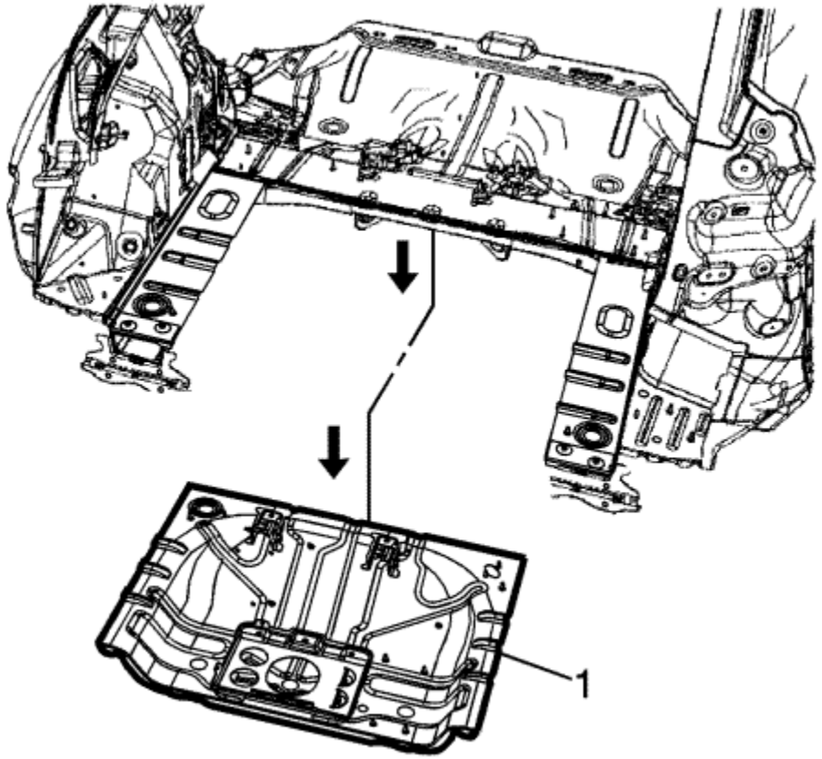

11. Remove inner damaged portion of floor panel (1).

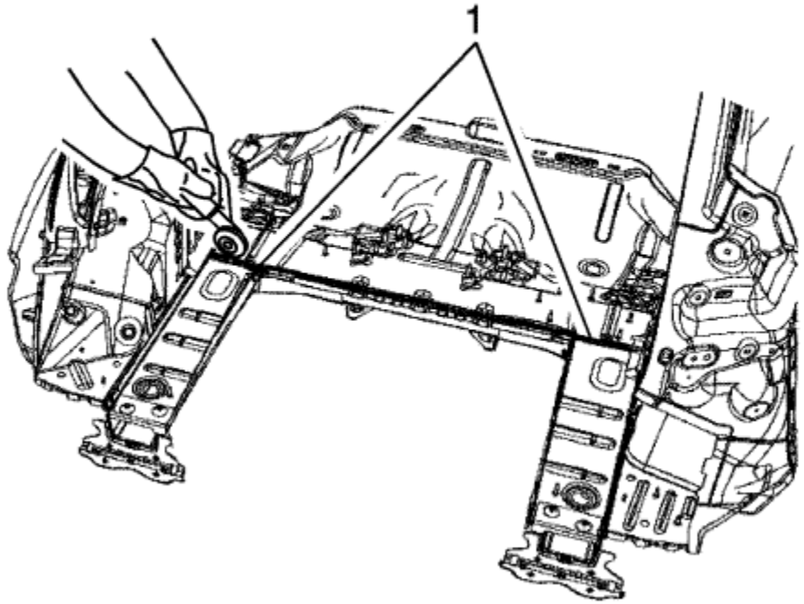

12. Cut across remaining portion of floor (1).

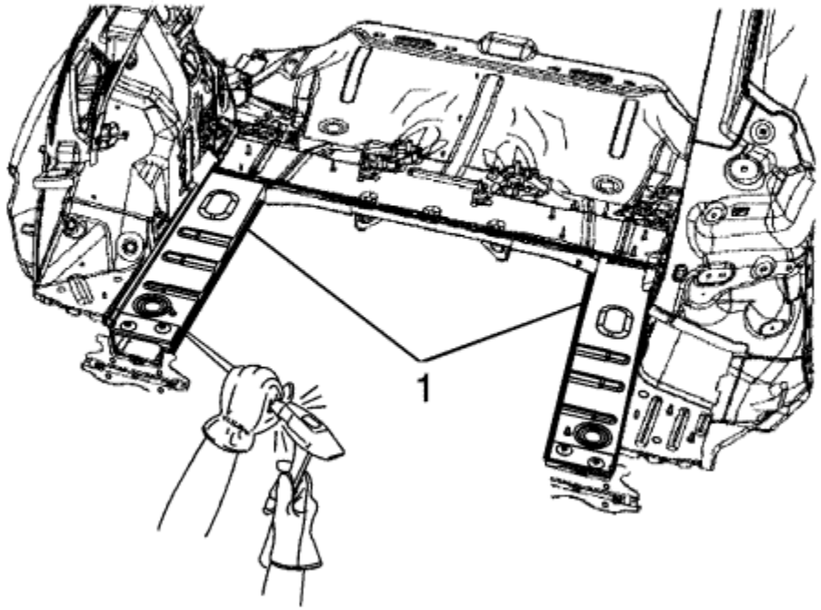

13. Chisel remaining portion (1) above frame rails and remove.

Installation Procedure

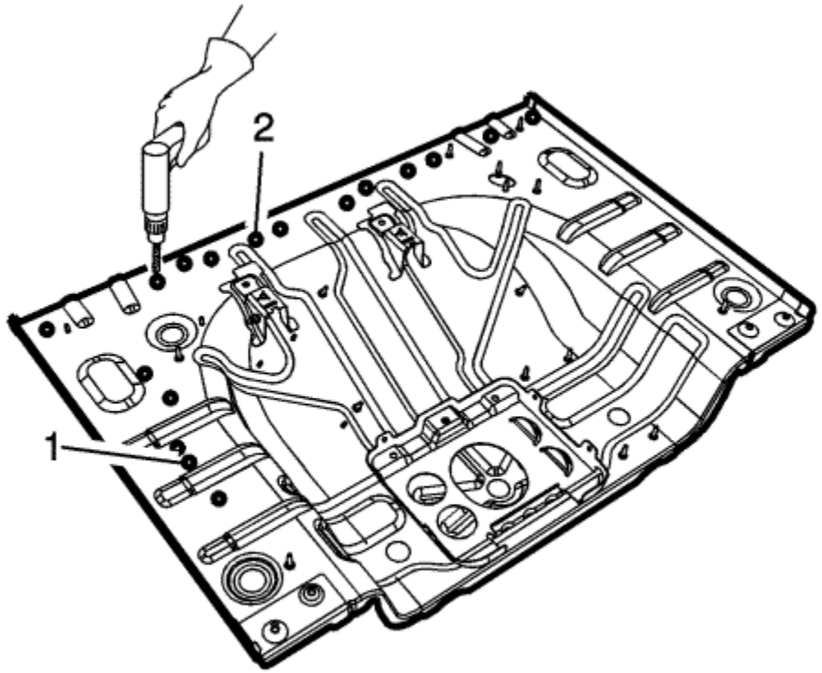

Note :

- If the location of the original plug weld holes cannot be determined, space the plug weld holes every 40 mm (1 ½ in) apart.
- Some panels may have structural weld-thru adhesive. It is necessary to replace the weld-thru adhesive with an additional spot weld between each factory spot weld.

1. Drill 8 mm (5/16 in) plug weld holes (1) in the service part as necessary in the corresponding locations noted on the original panel.
2. Lay out and drill an additional row (2) of 8 mm (5/16 in) plug weld holes on top of the no. 5 bar weld flanges.
3. Prepare all mating surfaces for welding as necessary.
4. Apply GM-approved Weld-Thru Coating or equivalent to all mating surfaces. Refer to Anti-Corrosion Treatment and Repair .

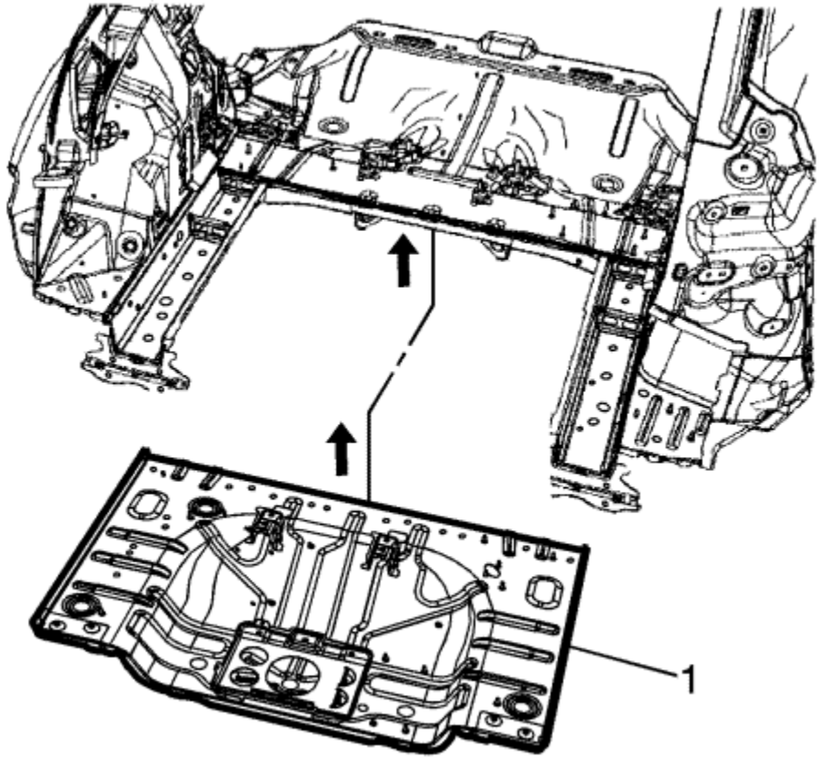

5. Position the rear floor pan (1) to the vehicle using three-dimensional measuring equipment. Clamp the part in place.

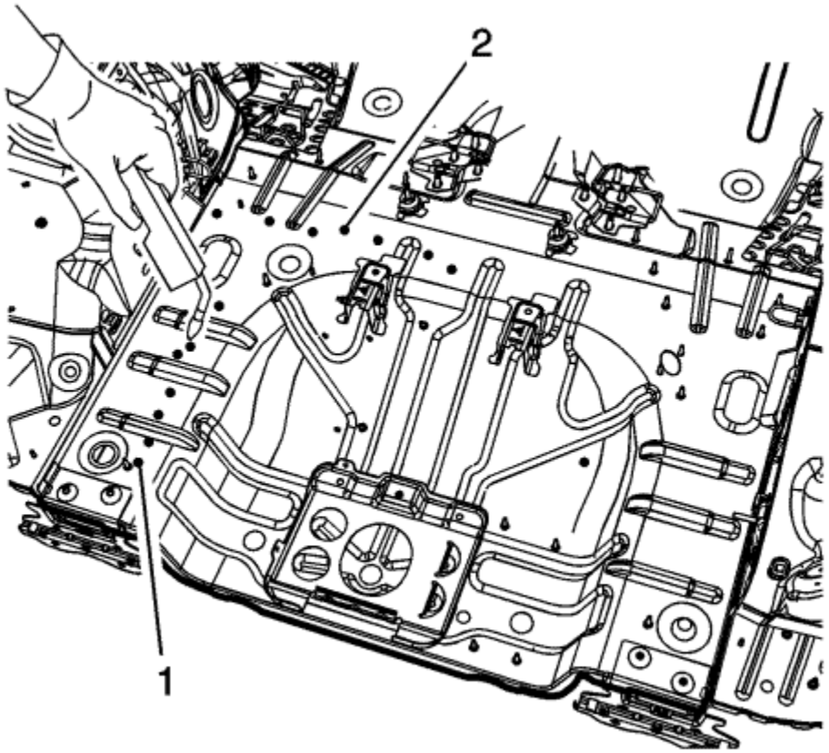

6. Plug weld (1) accordingly.

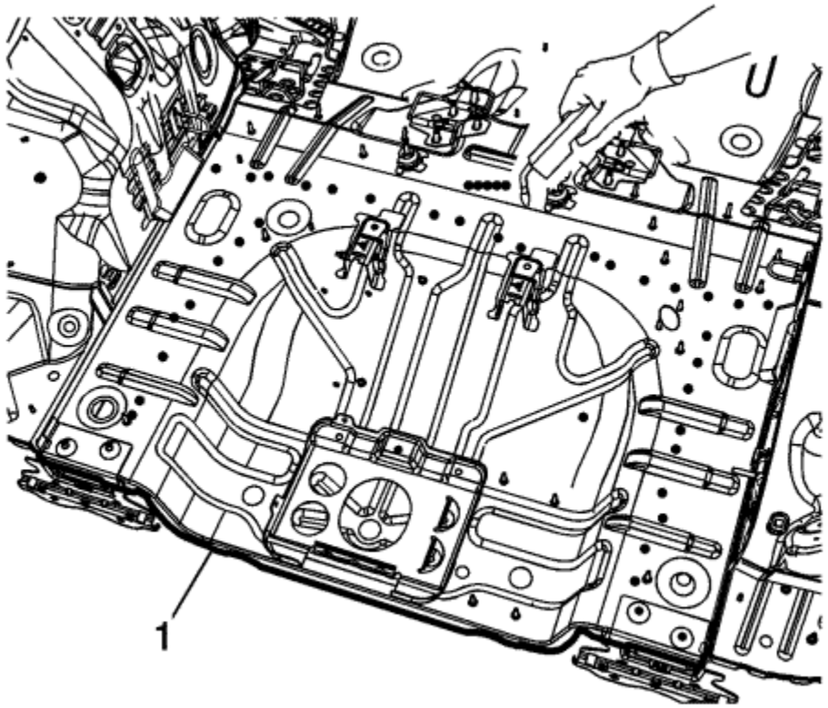

7. Weld the seam (1) along the front cut edge of the floor panel service part. To create a solid weld along the front of the service part with a minimum of heat distortion, make a stitch weld along the seam with 25 mm (1 in) gaps between each weld.
8. Clean and prepare all welded surfaces.
9. Apply sound deadening materials as necessary.
10. Paint the repaired area. Refer to Basecoat/Clearcoat Paint Systems .
11. Apply the sealers and anti-corrosion materials to the repair area, as necessary. Refer to Anti-Corrosion Treatment and Repair .
12. Install all related panels and components.
13. If disabled, enable the high voltage system. Refer to High Voltage Enabling .
14. Enable the SIR system. Refer to SIR Disabling and Enabling .

&#169© Copyright Chevrolet. All rights reserved

Rear Wheelhouse Panel Replacement

Danger: Always perform the High Voltage Disabling procedure prior to servicing any High Voltage component or connection. Personal Protection Equipment (PPE) and proper procedures must be followed.

The High Voltage Disabling procedure will perform the following tasks:

- Identify how to disable high voltage.
- Identify how to test for the presence of high voltage.
- Identify condition under which high voltage is always present and personal protection equipment (PPE) and proper procedures must be followed.

Before working on any high voltage system, be sure to wear the following Personal Protection Equipment:

- Safety glasses with appropriate side shields when within 15 meters (50 feet) of the vehicle, either indoors or outdoors.
- Certified and up-to-date Class "0" Insulation gloves rated at 1000V with leather protectors.
  - Visually and functionally inspect the gloves before use.
  - Wear the Insulation gloves with leather protectors at all times when working with the high voltage battery assembly, whether the system is energised or not.

Failure to follow the procedures exactly as written may result in serious injury or death.

Removal Procedure

Warning : Refer to Approved Equipment for Collision Repair Warning in the Preface section.

Warning : Refer to Glass and Sheet Metal Handling Warning in the Preface section.

1. Disable the SIR System. Refer to SIR Disabling and Enabling .
2. Inspect the high voltage system. Refer to High Voltage System Inspection .
3. Remove all related panels and components.
4. Visually inspect the damage. Repair as much of the damage as possible.
5. Remove the sealers and anti-corrosion materials from the repair area, as necessary. Refer to Anti-Corrosion Treatment and Repair .

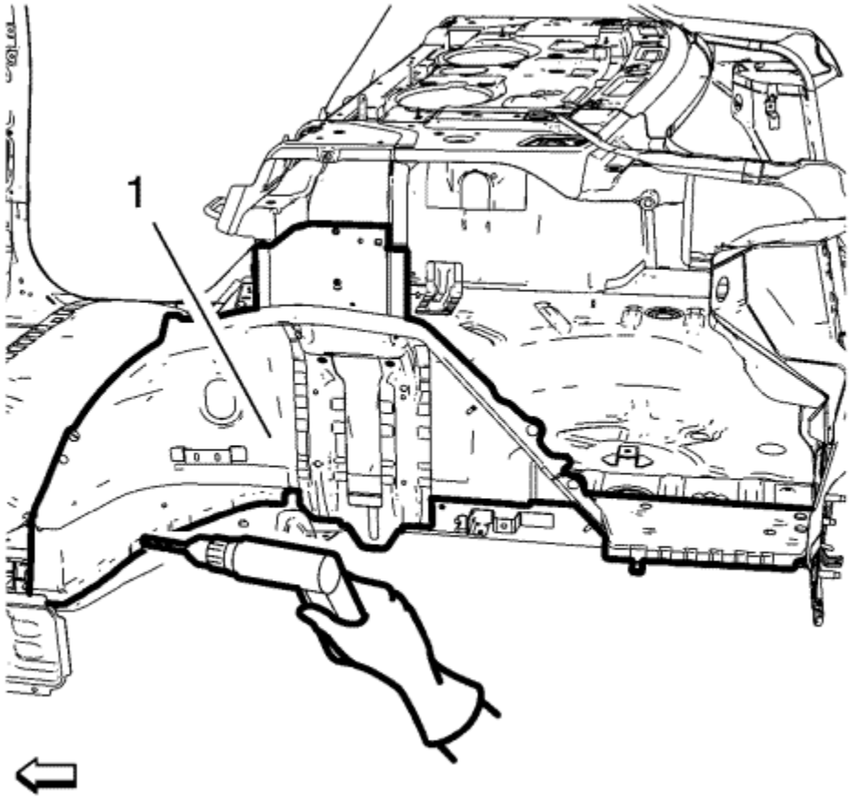

6. Locate and mark all the necessary factory welds of the rear inner wheelhouse panel (1).
7. Drill all factory welds.

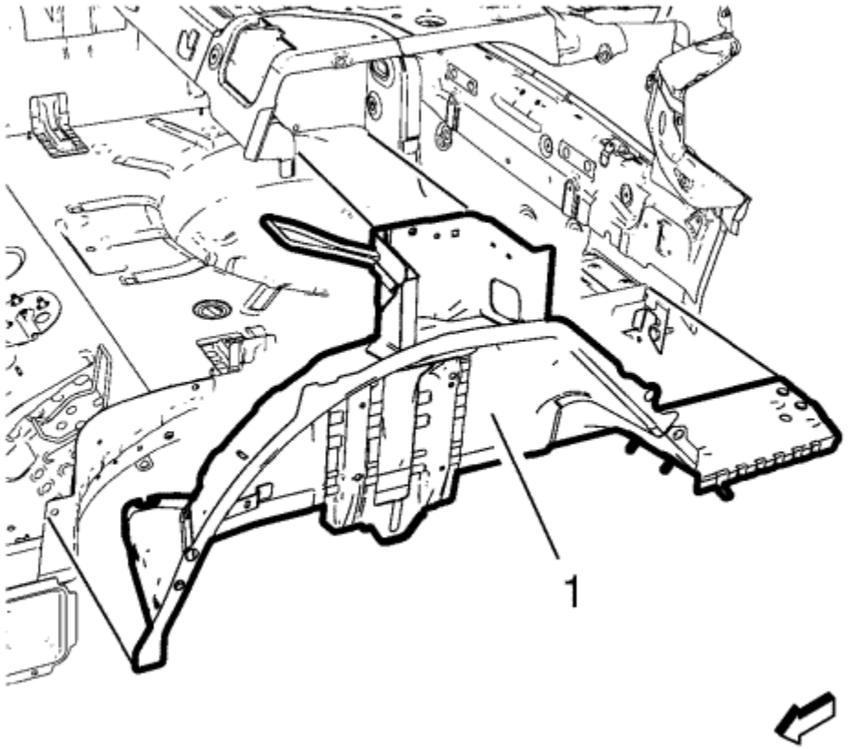

Note : Note the number and location of welds for installation of the service assembly.

8. Remove the rear inner wheelhouse panel (1).

Installation Procedure

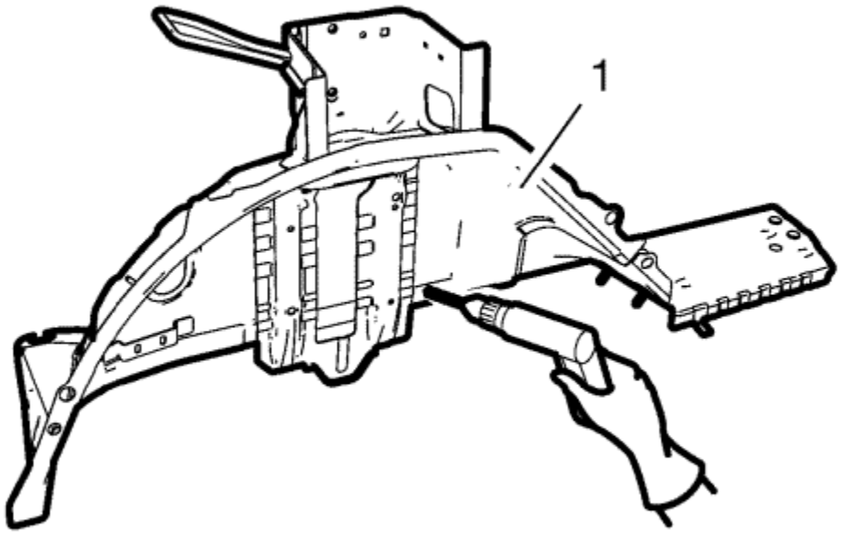

1. Drill **8 mm (5/16 in)** for plug welding along the edges of the rear inner wheelhouse panel (1) as noted from the original panel.

   Note : If the location of the original plug weld holes cannot be determined, space the plug weld holes every 40 mm (1 1/2 in).

2. Clean and prepare the attaching surfaces for welding.

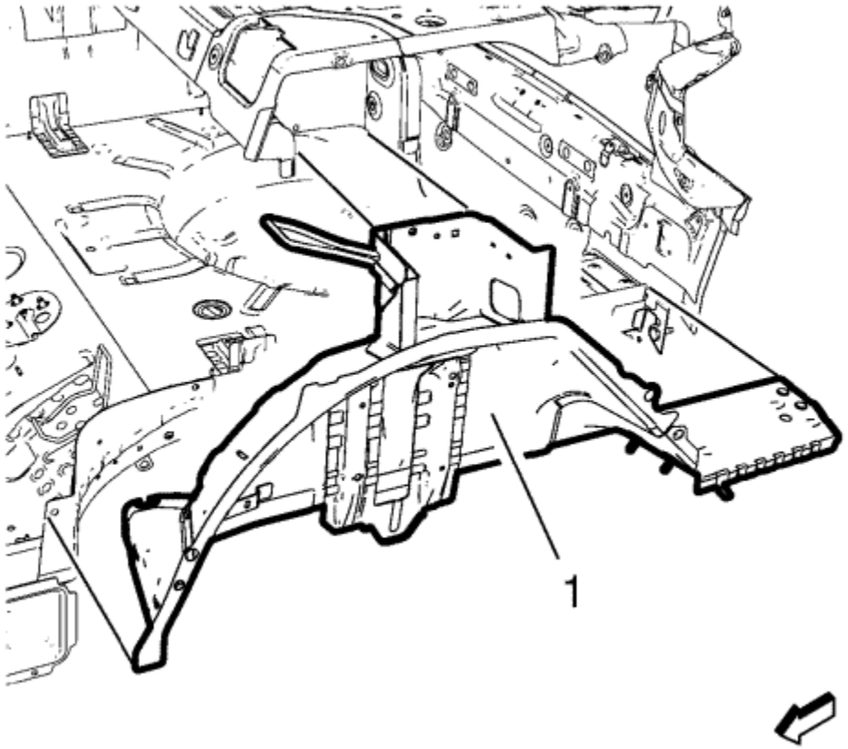

3. Position the rear inner wheelhouse panel (1) on the vehicle.
4. Verify the fit of the rear inner wheelhouse.
5. Clamp the rear inner wheelhouse into position.

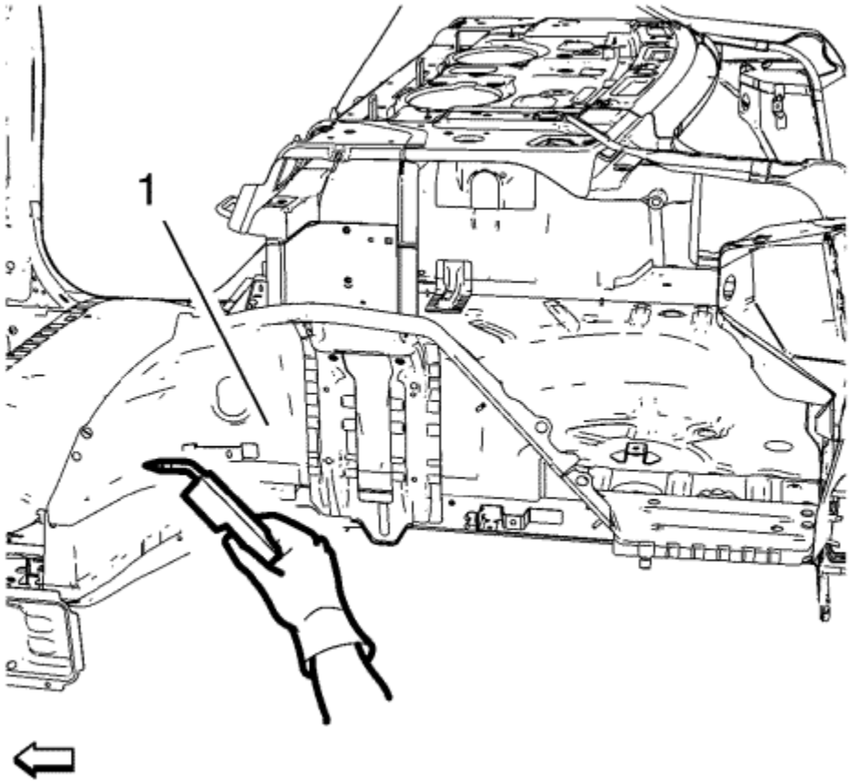

6. Plug weld the rear wheelhouse panel (1) accordingly.
7. Apply the sealers and anti-corrosion materials to the repair area, as necessary. Refer to Anti-Corrosion Treatment and Repair .
8. Paint the repaired area. Refer to Basecoat/Clearcoat Paint Systems .
9. Install all related panels and components.
10. If disabled, enable the high voltage system. Refer to High Voltage Enabling .
11. Enable the SIR system. Refer to SIR Disabling and Enabling .

&#169© Copyright Chevrolet. All rights reserved

Quarter Outer Panel Sectioning

Danger: Always perform the High Voltage Disabling procedure prior to servicing any High Voltage component or connection. Personal Protection Equipment (PPE) and proper procedures must be followed.

The High Voltage Disabling procedure will perform the following tasks:

- Identify how to disable high voltage.
- Identify how to test for the presence of high voltage.
- Identify condition under which high voltage is always present and personal protection equipment (PPE) and proper procedures must be followed.

Before working on any high voltage system, be sure to wear the following Personal Protection Equipment:

- Safety glasses with appropriate side shields when within 15 meters (50 feet) of the vehicle, either indoors or outdoors.
- Certified and up-to-date Class "0" Insulation gloves rated at 1000V with leather protectors.
  - Visually and functionally inspect the gloves before use.
  - Wear the Insulation gloves with leather protectors at all times when working with the high voltage battery assembly, whether the system is energised or not.

Failure to follow the procedures exactly as written may result in serious injury or death.

Special Tools

- *BO-6392* Flanging Tool Kit
- *BO-6396* Bonding Pliers

For equivalent regional tools, refer to Special Tools .

Removal Procedure

Warning : Refer to Approved Equipment for Collision Repair Warning in the Preface section.

Warning : Refer to Collision Sectioning Warning in the Preface section.

Warning : Refer to Glass and Sheet Metal Handling Warning in the Preface section.

1. Disable the SIR system. Refer to SIR Disabling and Enabling .

2. Inspect the high voltage system. Refer to High Voltage System Inspection .
3. Disable the high voltage system. Refer to High Voltage Disabling .
4. Remove all related panels and components.
5. Visually inspect the damage. Repair as much of the damage as possible.
6. Remove the sealers and anti-corrosion materials from the repair area as necessary.

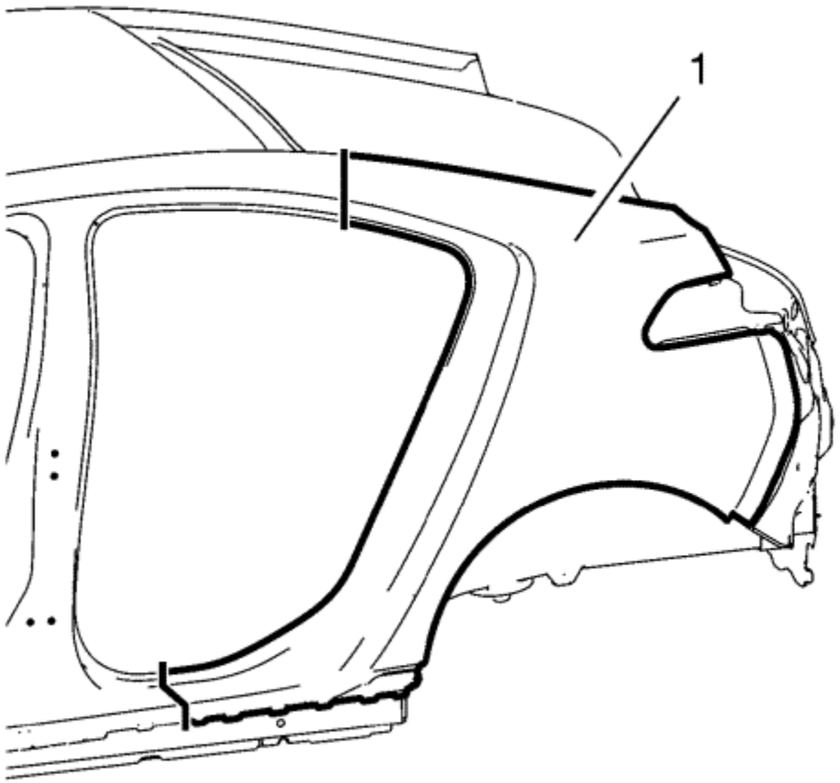

7. Create cut lines on the quarter outer panel (1).

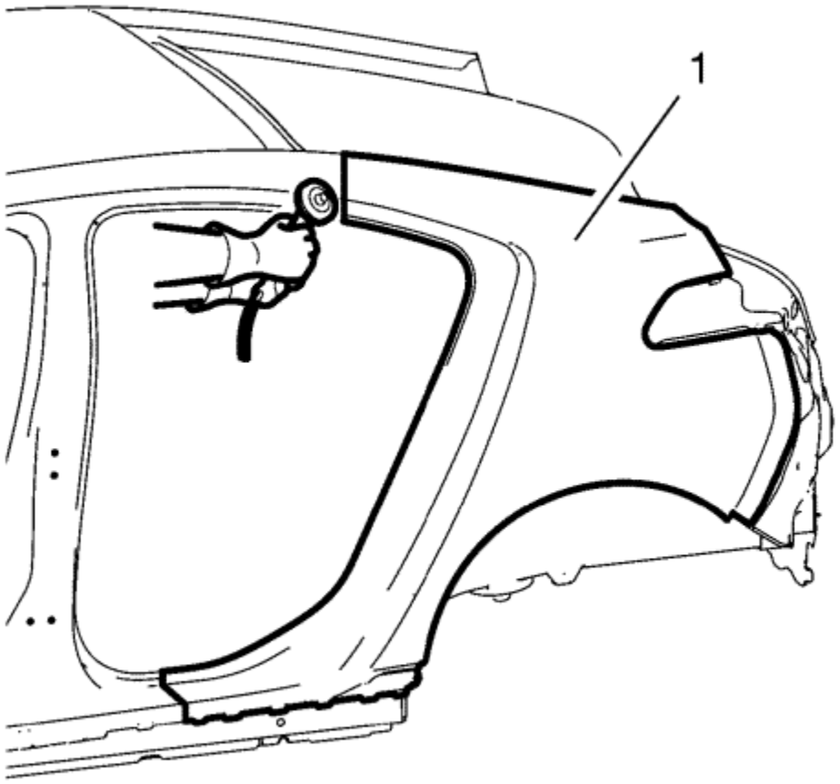

Note : Do not damage any inner panels or reinforcements.

8. Cut the quarter outer panel (1) where the sectioning is to be performed.

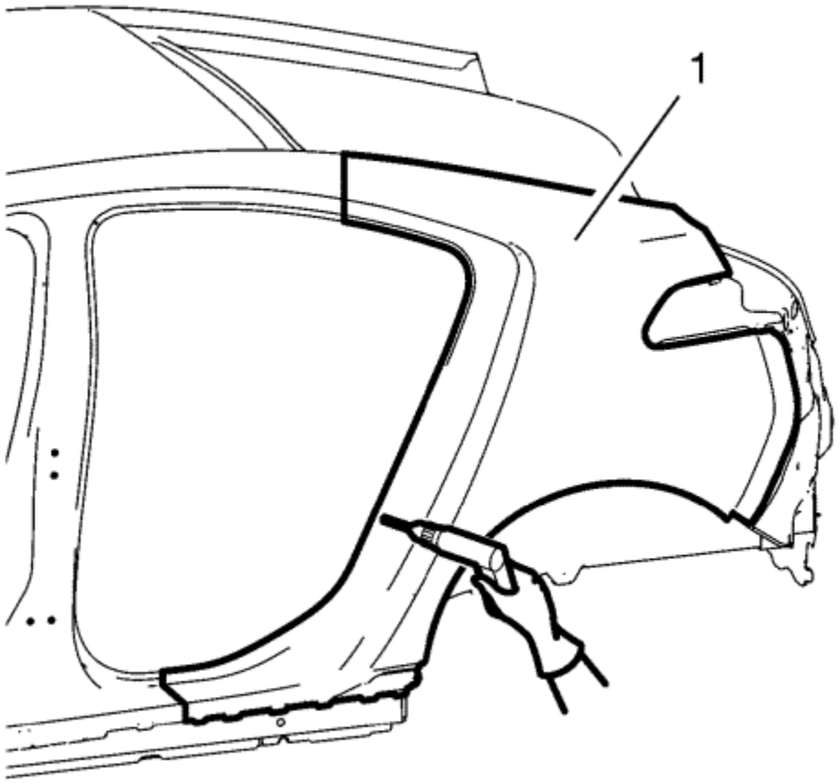

9. Locate and mark all the necessary factory welds of the quarter outer panel (1).
10. Drill all factory welds. Note the number and location of welds for installation of the service assembly.

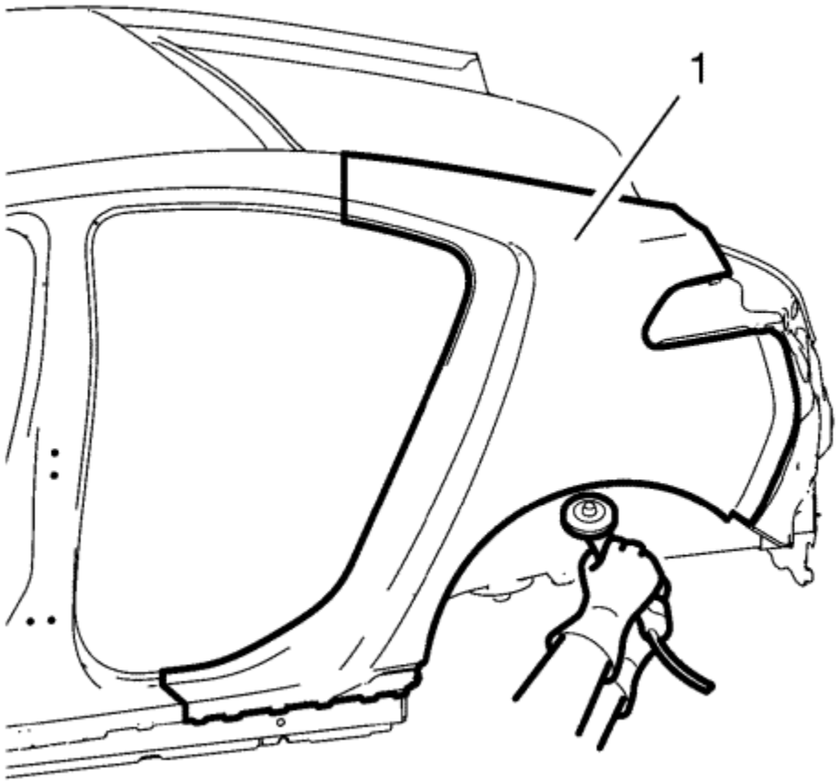

11. Open the wheelhouse flanging of the quarter outer panel (1).

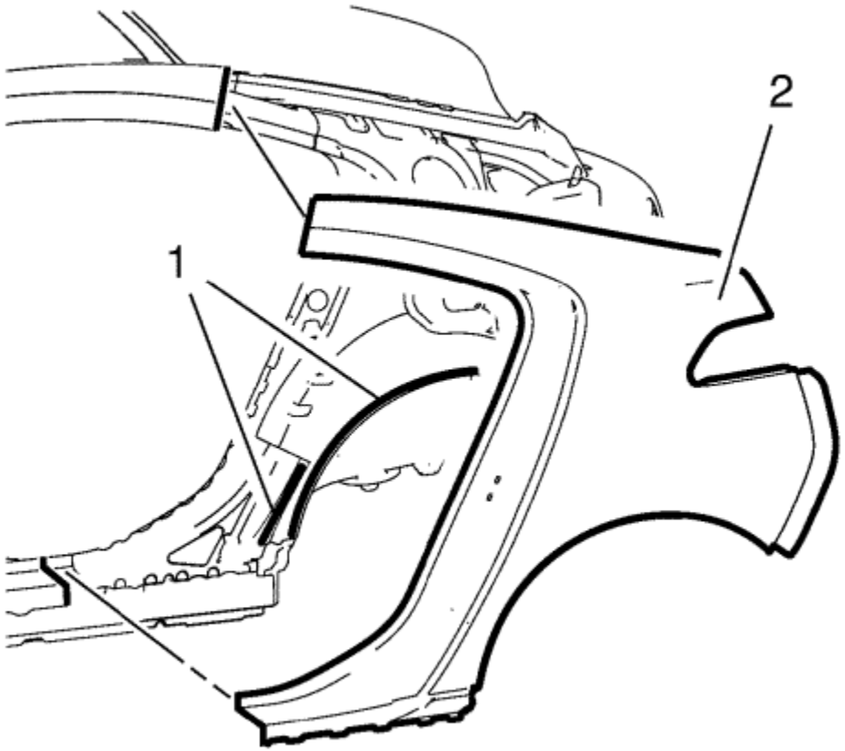

12. To remove the damaged quarter outer panel (2) cut the adhesive (1) with a suitable tool.

Installation Procedure

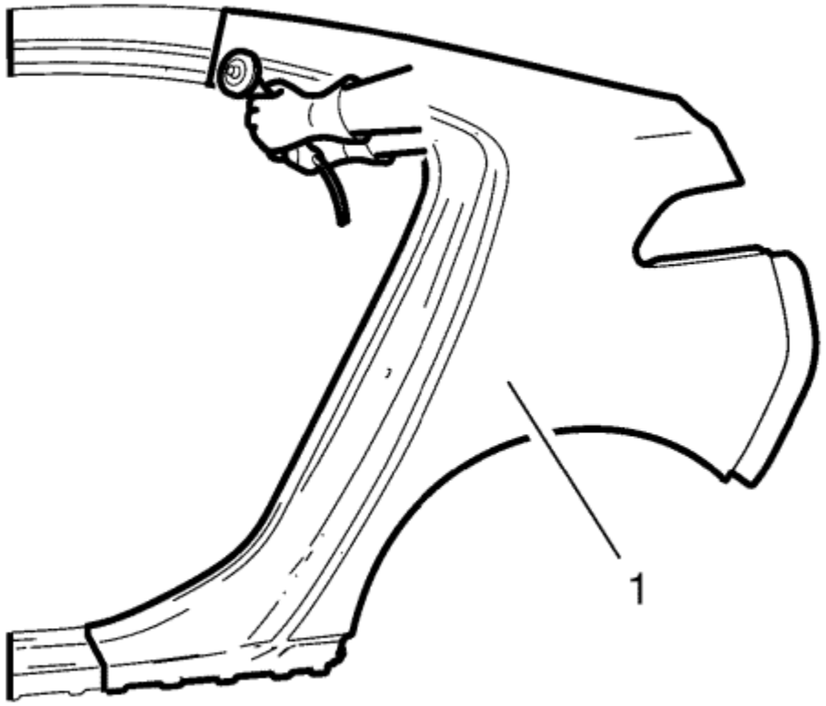

1. Cut the quarter outer panel (1) in corresponding locations to fit the remaining original panel. The sectioning joint should be trimmed to allow a gap of one-and-one-half-times the metal thickness at the sectioning joint.
2. Prepare all mating surfaces as necessary.
3. Clean and prepare the attaching surfaces for spot welding.

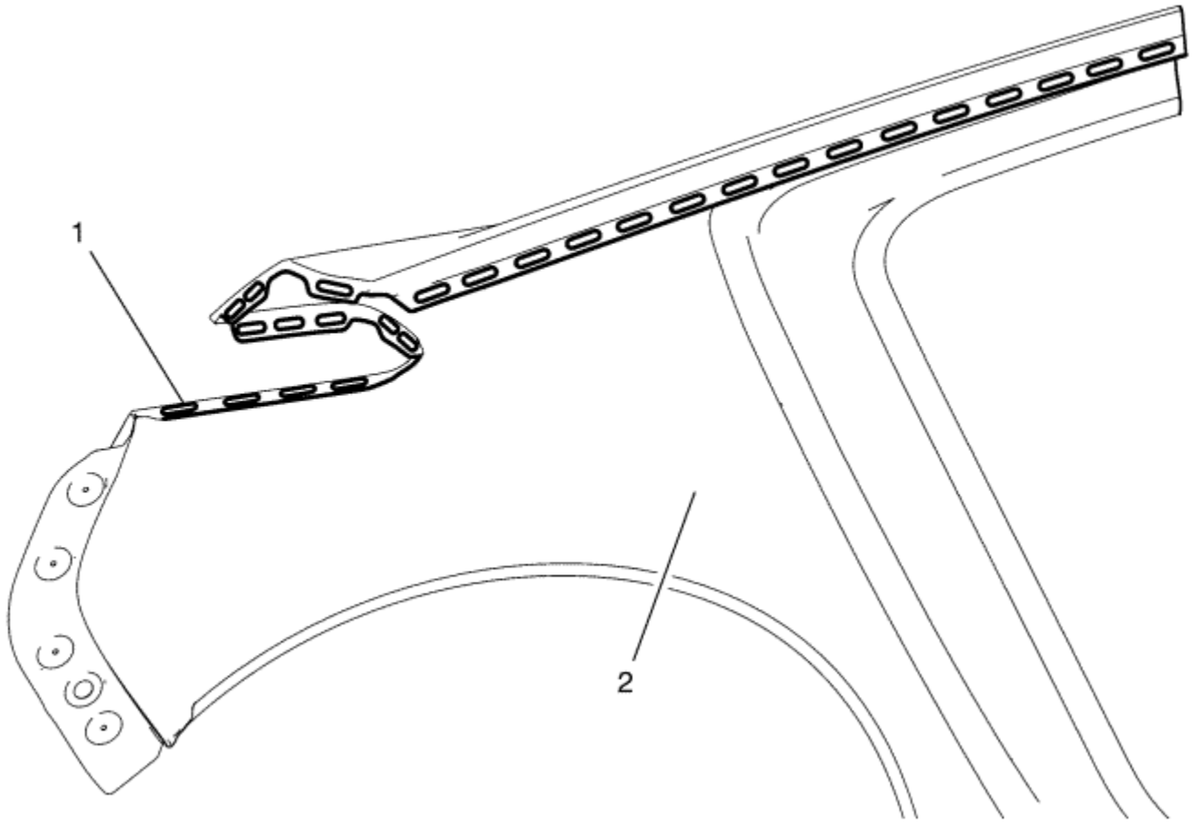

4. Create 27 **5 x 18 mm (4/16 x 11/16 in)** (1) slots for MIG-brazing to the quarter outer panel (2).
5. Position the quarter outer panel on the vehicle.
6. Verify the fit of the quarter outer panel.
7. Clamp the quarter outer panel into position.

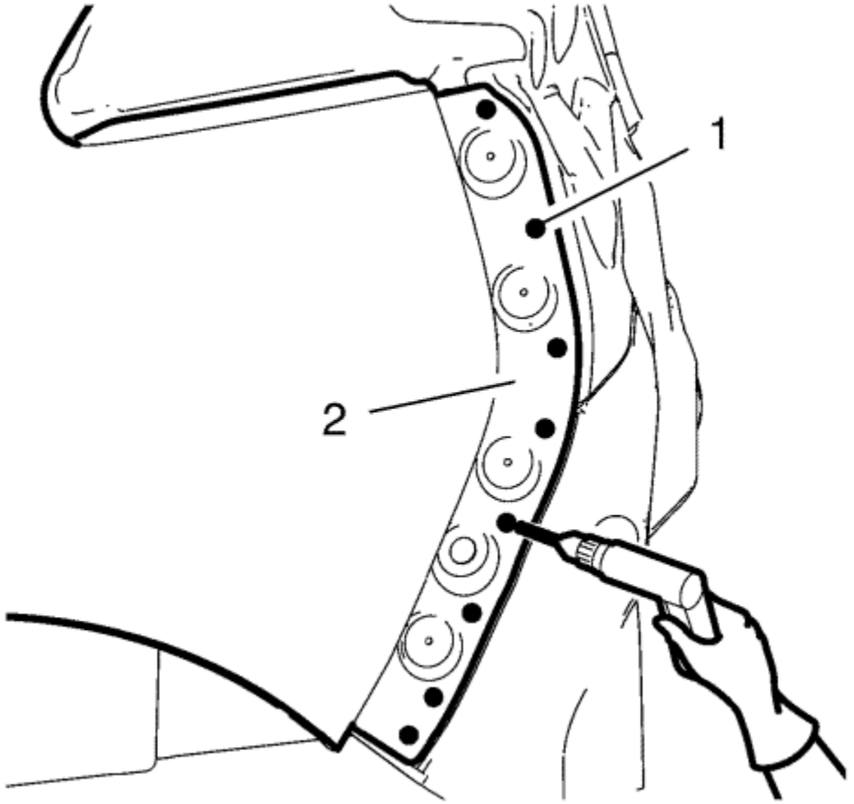

8. Drill 8 **4,2 mm** holes (1) for rivets to quarter outer panel (2).
9. Remove quarter outer panel from the vehicle.

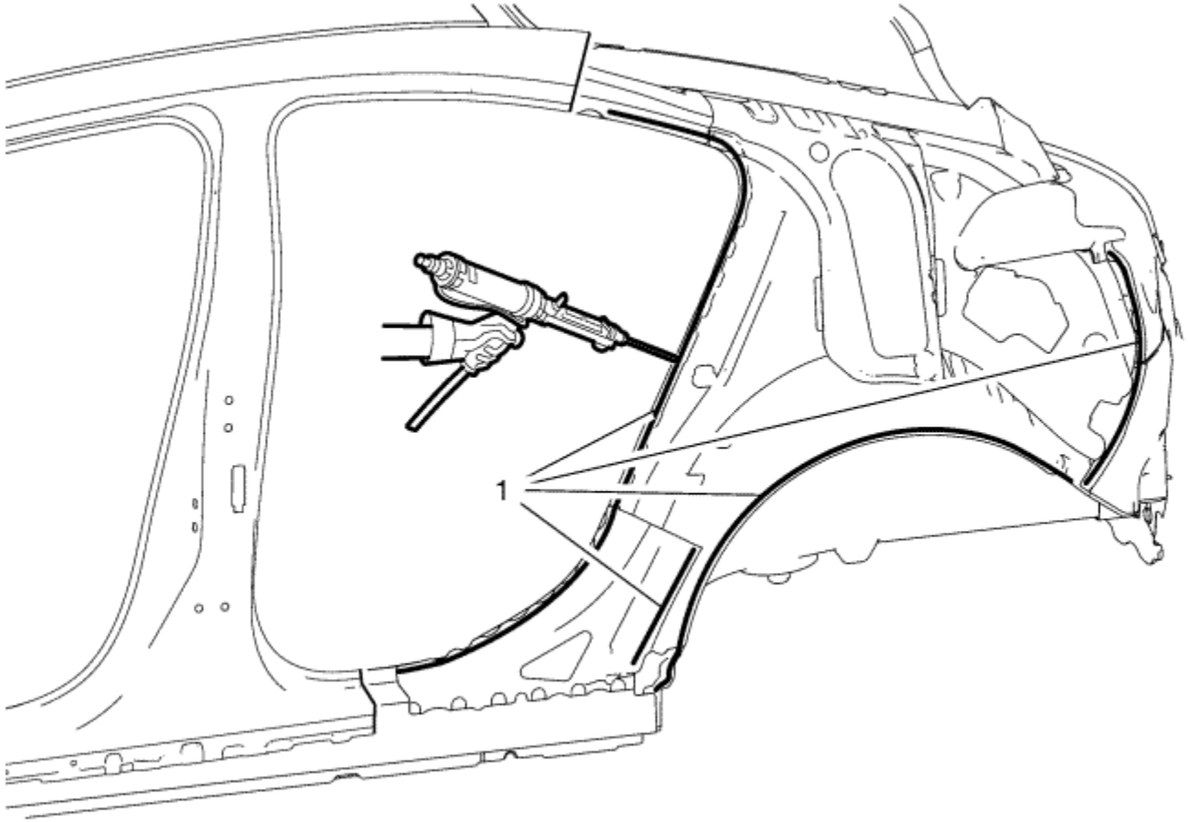

10. Apply structural adhesive to body side inner panel (1).

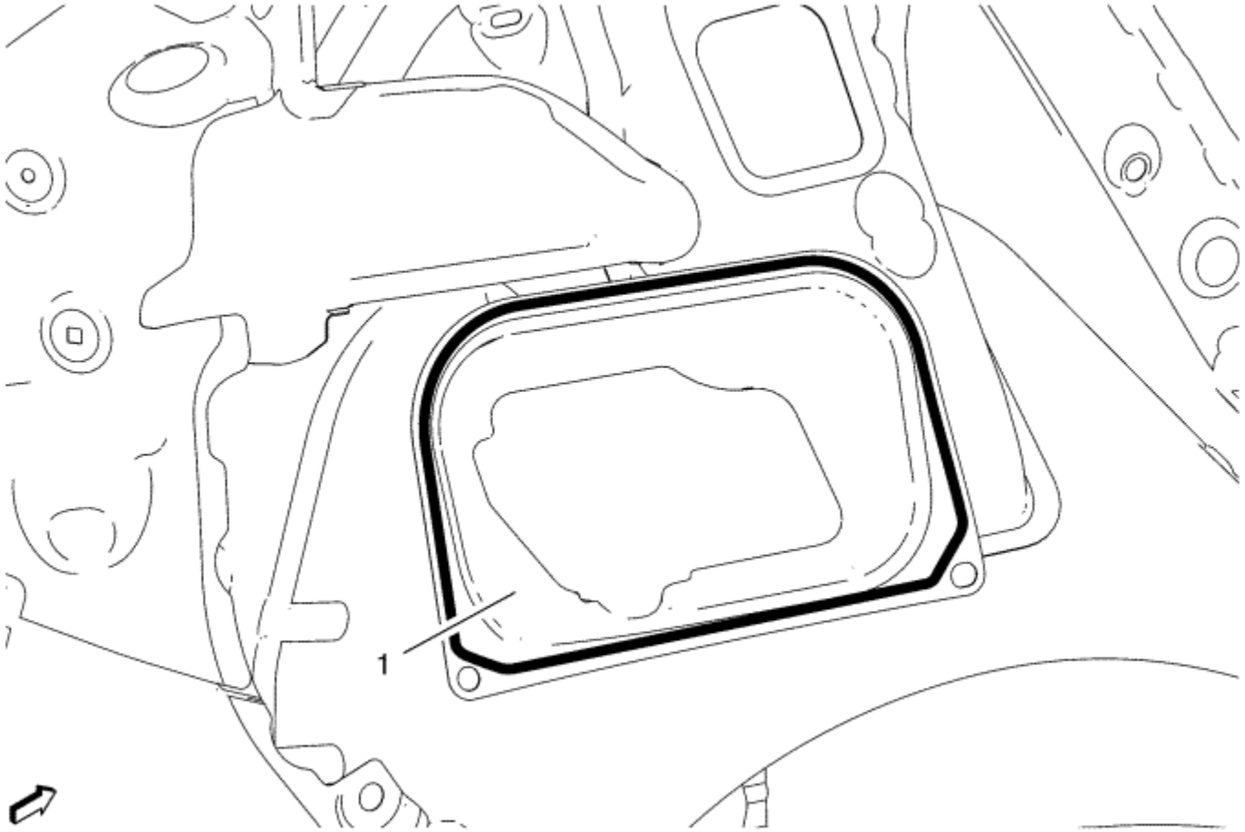

11. Apply structural adhesive to body side inner panel filler (1) on right side ONLY.

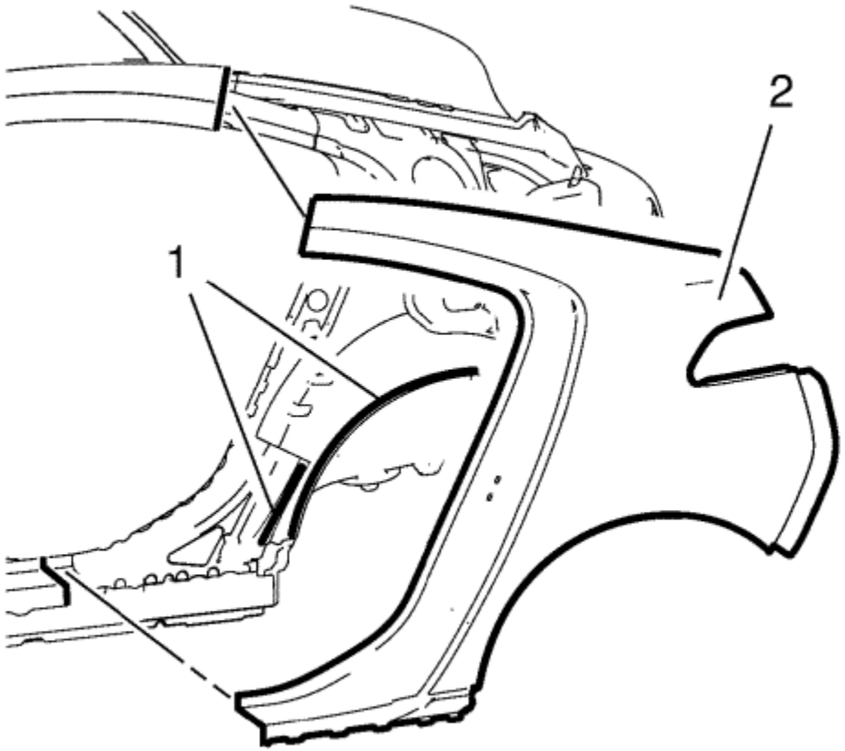

12. Position the quarter outer panel (1) on the vehicle.
13. Verify the fit of the quarter outer panel.
14. Clamp the quarter outer panel into position.

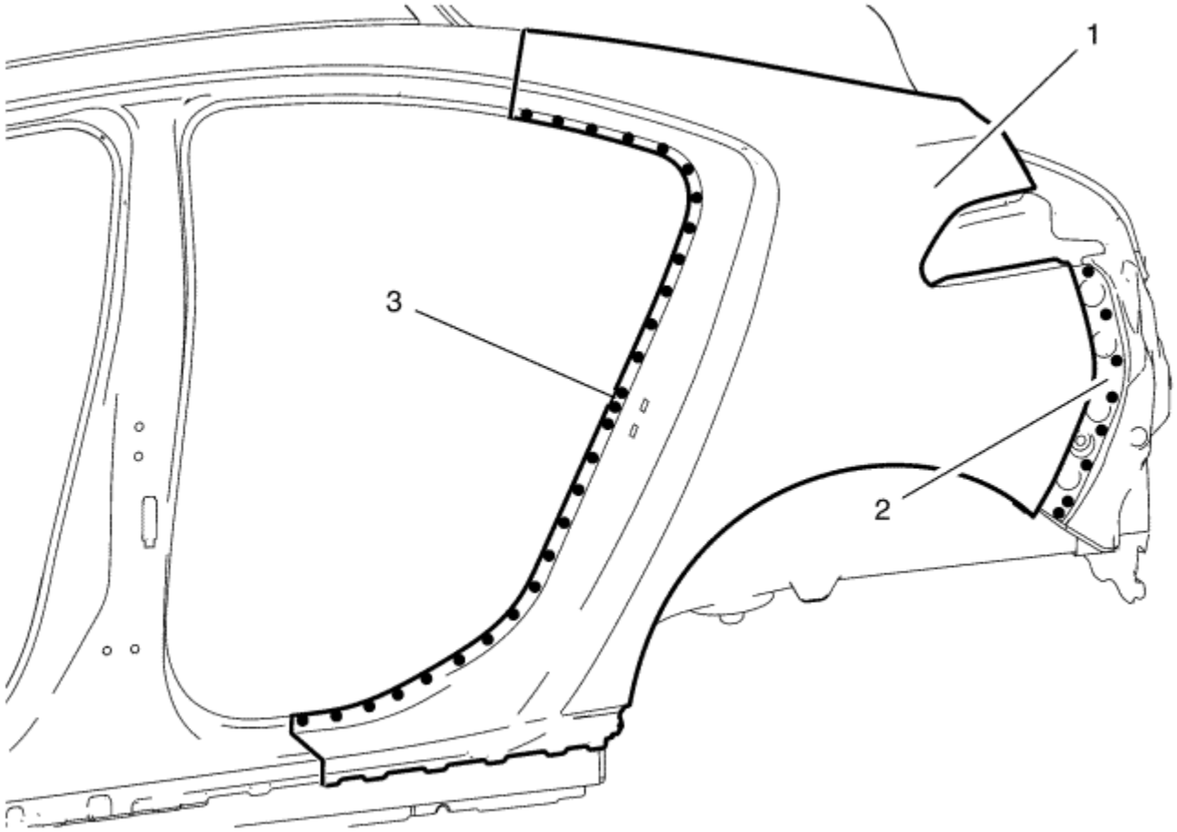

15. Rivet (2) the quarter outer panel.
16. Spot weld the quarter outer panel (1) accordingly.

    Flange rear side door opening (3) - 28 spot welds.

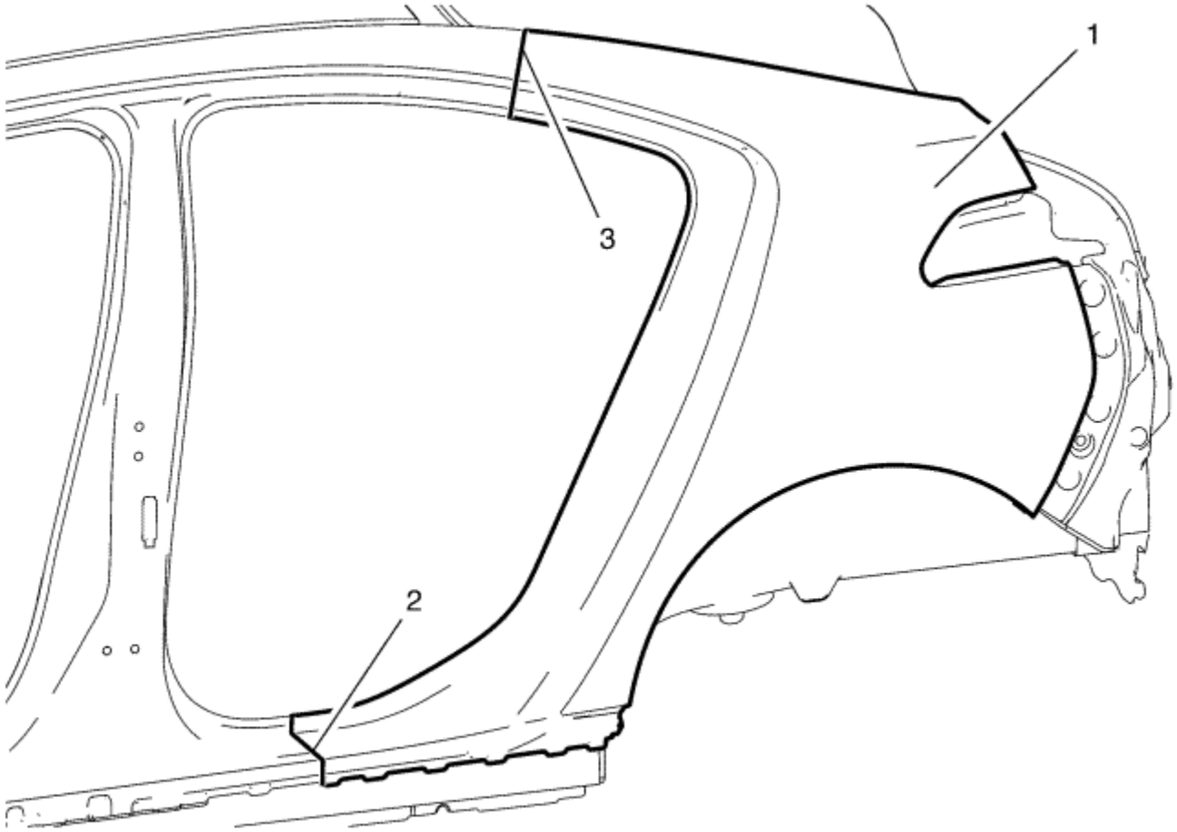

17. Braze the quarter outer panel (1) accordingly.
    - Quarter outer panel / rocker outer panel (2) - **160 mm**.
    - Quarter outer panel / body side outer upper panel (3) - **215 mm**.
    - Quarter outer panel / body side inner panel - 27 **5 x 18 mm (4/16 x 11/16 in)** slot brazes.
18. To create a solid braze with minimum heat distortion, make **25 mm** stitch brazes along the seam with **25 mm** gaps between them. Then go back and complete the stitch braze.
19. Pre-flanging the flange with *BO-6396* pliers and *BO-6392* tool kit.

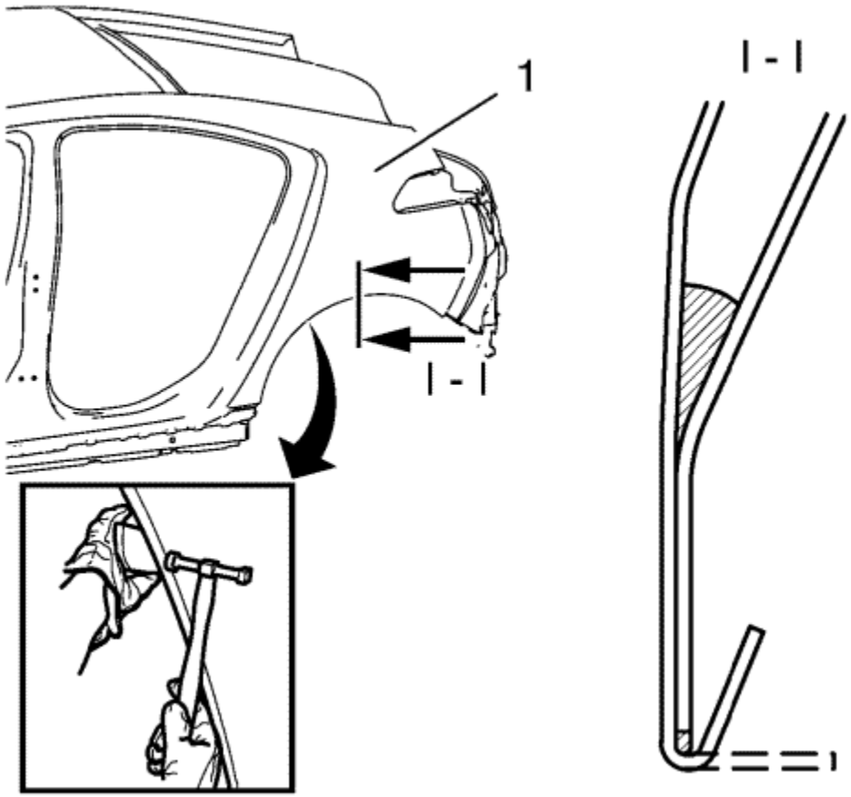

20. Finish closing the wheelhouse flanging.
21. Apply the sealers and anti-corrosion materials to the repair area, as necessary.
22. Paint the repaired area.
23. Install all related panels and components.
24. Enable the high voltage system. Refer to High Voltage Enabling .
25. Enable the SIR system. Refer to SIR Disabling and Enabling .

&#169© Copyright Chevrolet. All rights reserved

Body Rear End Panel Replacement

Danger: Always perform the High Voltage Disabling procedure prior to servicing any High Voltage component or connection. Personal Protection Equipment (PPE) and proper procedures must be followed.

The High Voltage Disabling procedure will perform the following tasks:

- Identify how to disable high voltage.
- Identify how to test for the presence of high voltage.
- Identify condition under which high voltage is always present and personal protection equipment (PPE) and proper procedures must be followed.

Before working on any high voltage system, be sure to wear the following Personal Protection Equipment:

- Safety glasses with appropriate side shields when within 15 meters (50 feet) of the vehicle, either indoors or outdoors.
- Certified and up-to-date Class "0" Insulation gloves rated at 1000V with leather protectors.
  - Visually and functionally inspect the gloves before use.
  - Wear the Insulation gloves with leather protectors at all times when working with the high voltage battery assembly, whether the system is energised or not.

Failure to follow the procedures exactly as written may result in serious injury or death.

Removal Procedure

Warning : Refer to Approved Equipment for Collision Repair Warning in the Preface section.

Warning : Refer to Glass and Sheet Metal Handling Warning in the Preface section.

1. Disable the SIR System. Refer to SIR Disabling and Enabling .
2. Inspect the high voltage system. Refer to High Voltage System Inspection .
3. Remove all related panels and components.
4. Visually inspect the damage. Repair as much of the damage as possible.
5. Remove the sealers and anti-corrosion materials from the repair area, as necessary. Refer to Anti-Corrosion Treatment and Repair .

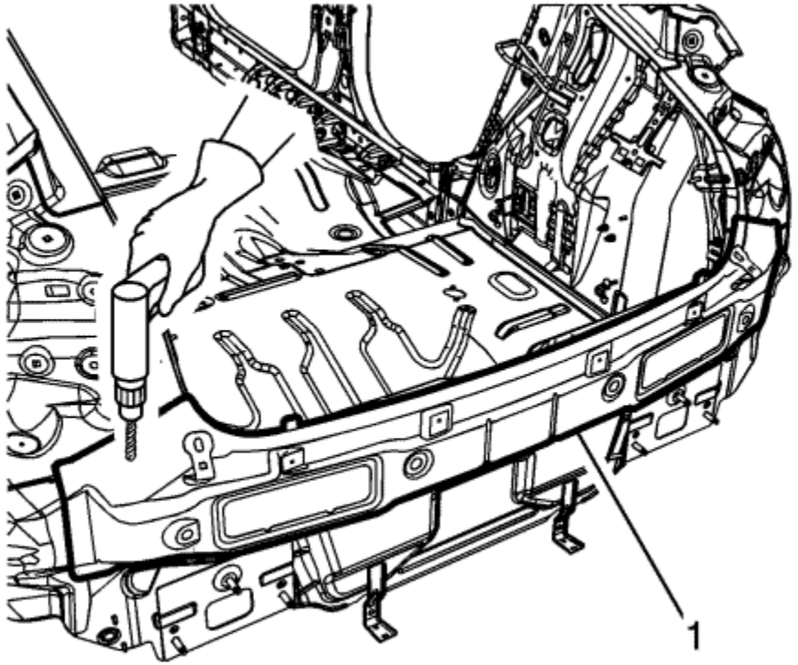

6. Locate and mark all the necessary factory welds of the body rear end outer panel (1).

   Note : Note the number and location of welds for installation of the service assembly.

7. Drill all factory welds.

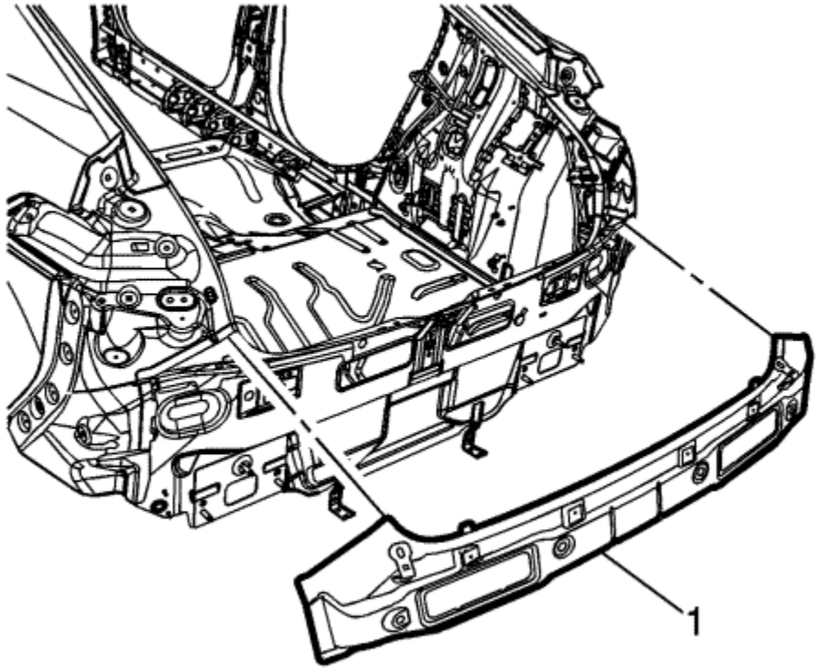

8. Remove the body rear end panel (1).

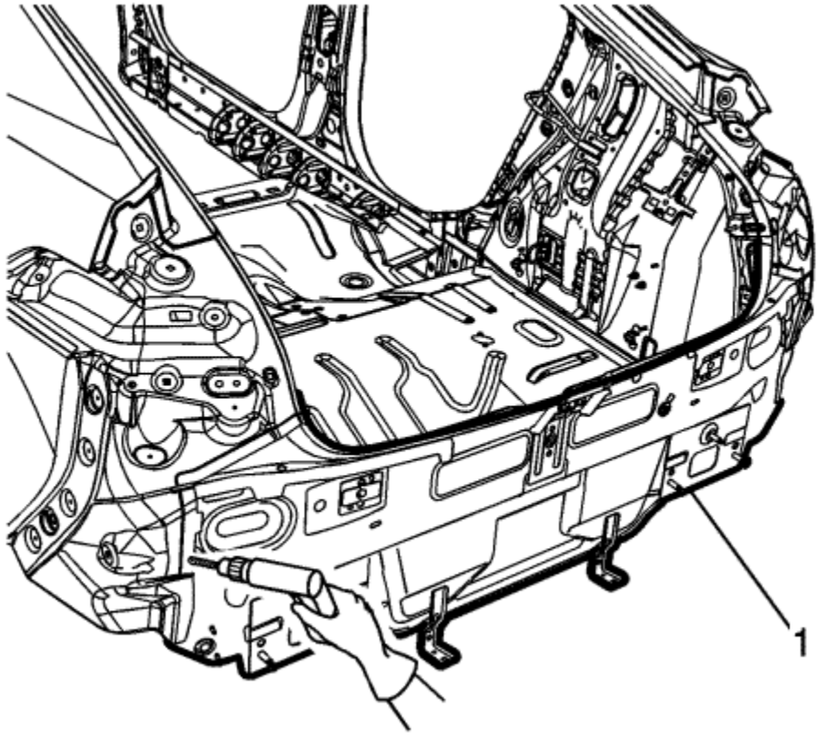

9. Locate and mark all the necessary factory welds of the body rear end panel (1).

   Note : Note the number and location of welds for installation of the service assembly.

10. Drill all factory welds.

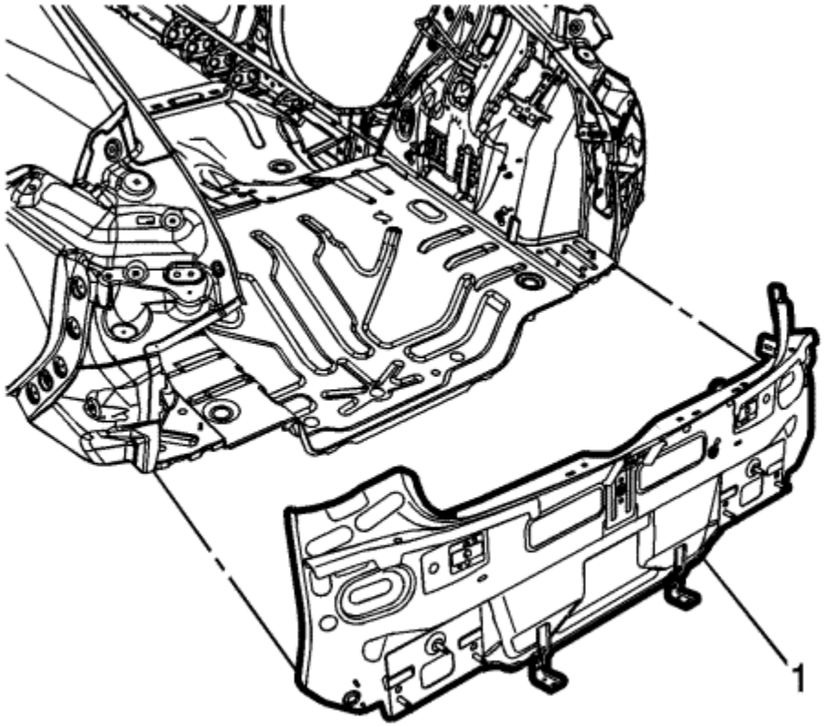

11. Remove the body rear end panel (1).

Installation Procedure

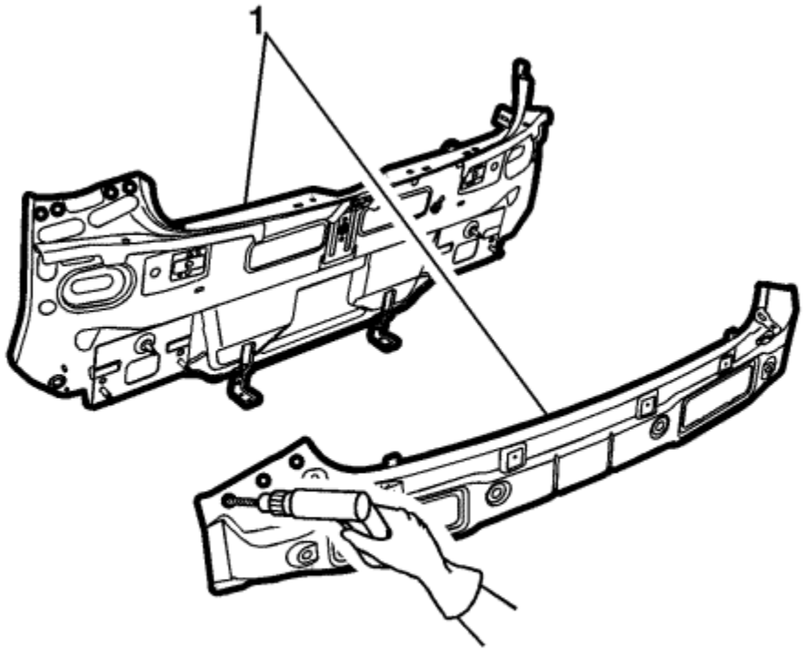

Note : If the location of the original plug weld holes cannot be determined, space the plug weld holes every 40 mm (1 1/2 in).

1. Drill **8 mm (5/16 in)** for plug welding along the edges of the body rear end panel (1) as noted from the original panel.
2. Clean and prepare the attaching surfaces for welding.

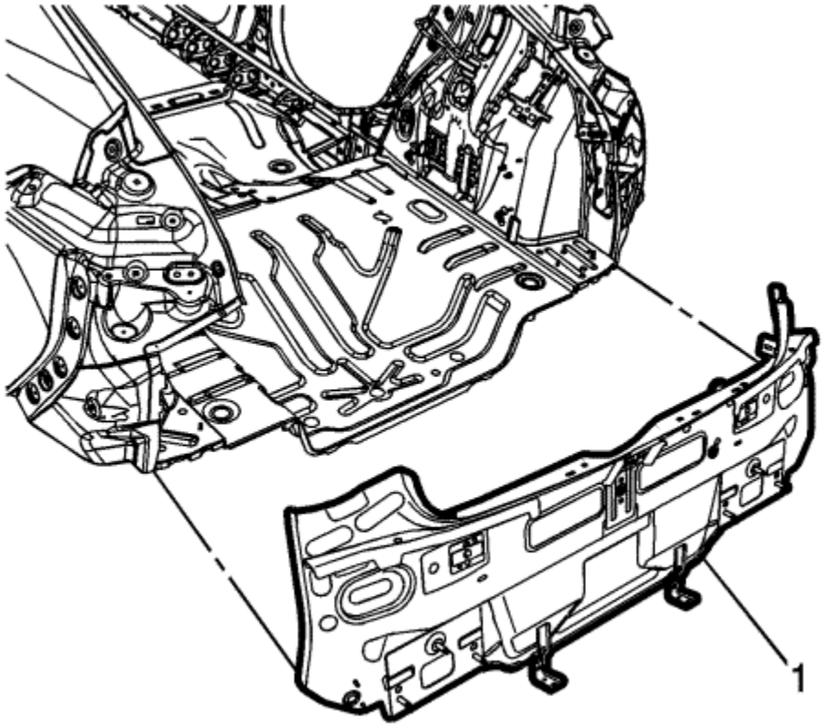

3. Position the rear end panel (1) to the vehicle using 3-dimensional measuring equipment. Clamp the rear end panel into place.

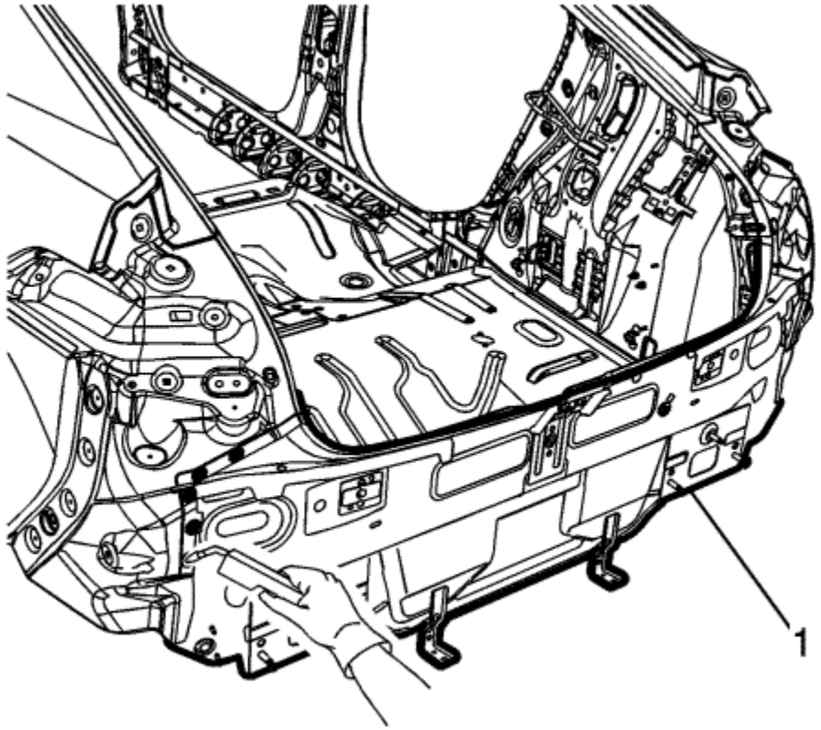

4. Plug weld the body rear end panel (1) accordingly.

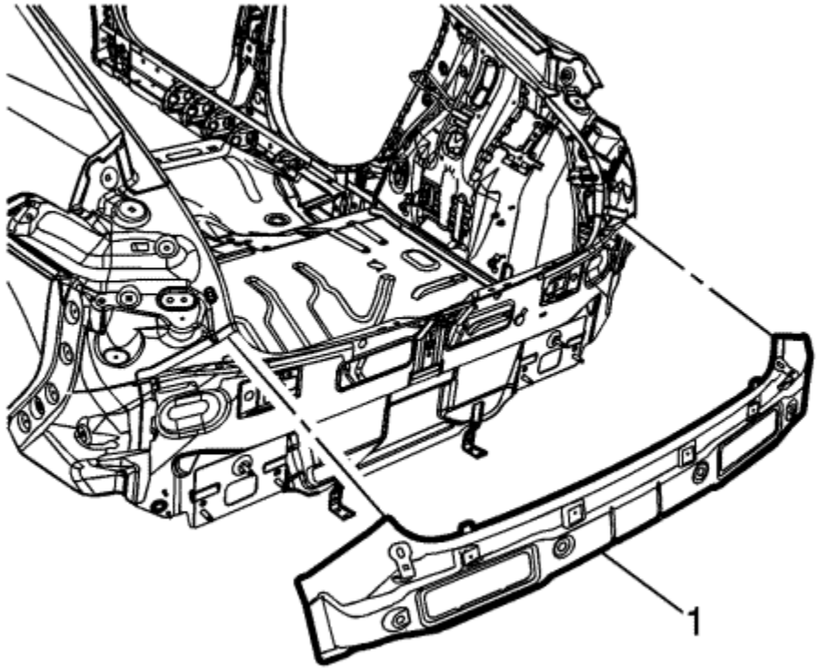

5. Position the rear end outer panel (1) to the vehicle using 3-dimensional measuring equipment. Clamp the rear end panel into place.

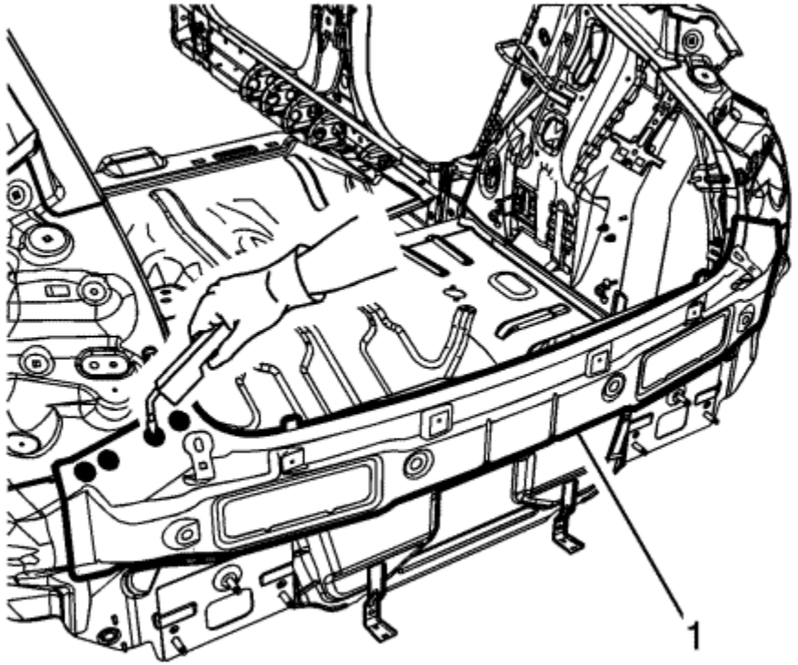

6. Plug weld the body rear end outer panel (1) accordingly.
7. Apply the sealers and anti-corrosion materials to the repair area, as necessary. Refer to Anti-Corrosion Treatment and Repair .
8. Paint the repaired area. Refer to Basecoat/Clearcoat Paint Systems .
9. Install all related panels and components.
10. If disabled, enable the high voltage system. Refer to High Voltage Enabling .
11. Enable the SIR system. Refer to SIR Disabling and Enabling .

&#169© Copyright Chevrolet. All rights reserved

Front Wing Front Bracket Replacement

Removal Procedure

Warning : Refer to Approved Equipment for Collision Repair Warning in the Preface section.

Warning : Refer to Glass and Sheet Metal Handling Warning in the Preface section.

1. Disconnect the negative battery cable. Refer to Battery Negative Cable Disconnection and Connection .
2. Remove all related panels and components.
3. Remove the sealers and anti-corrosion materials from the repair area as necessary.

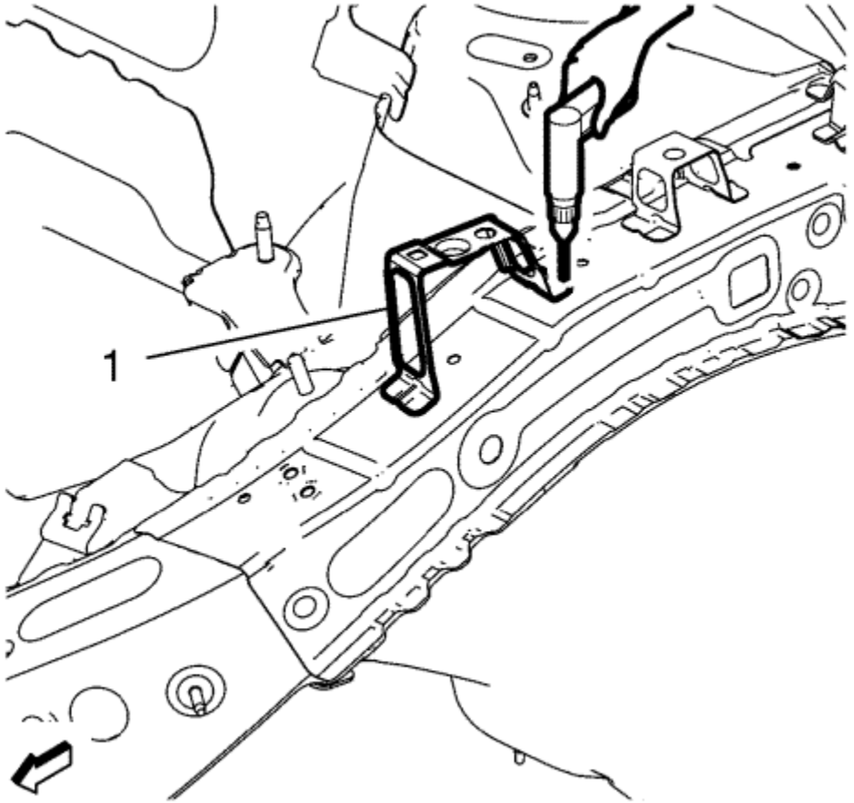

4. Drill off the front wing front bracket (1).

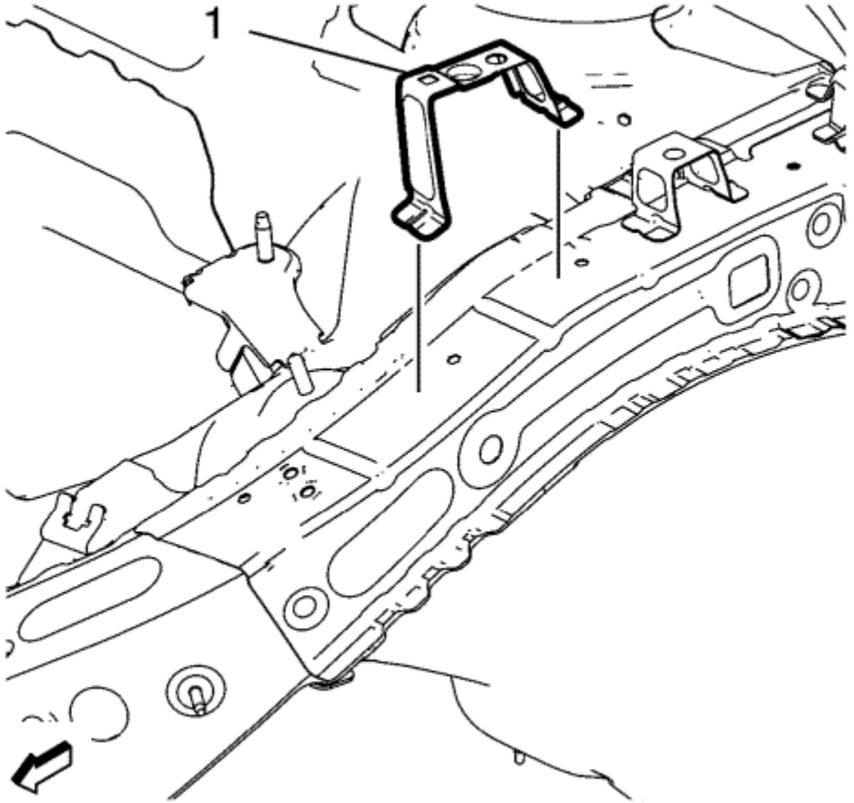

5. Remove the front wing front bracket (1).

Installation Procedure

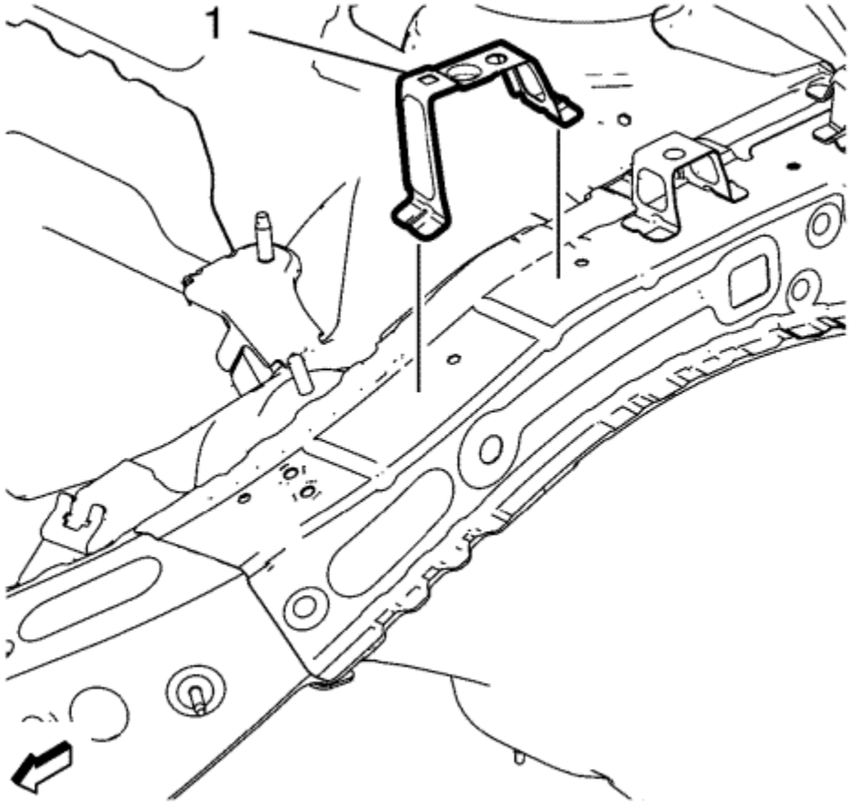

1. Align the front wing front bracket (1) and clamp into position.

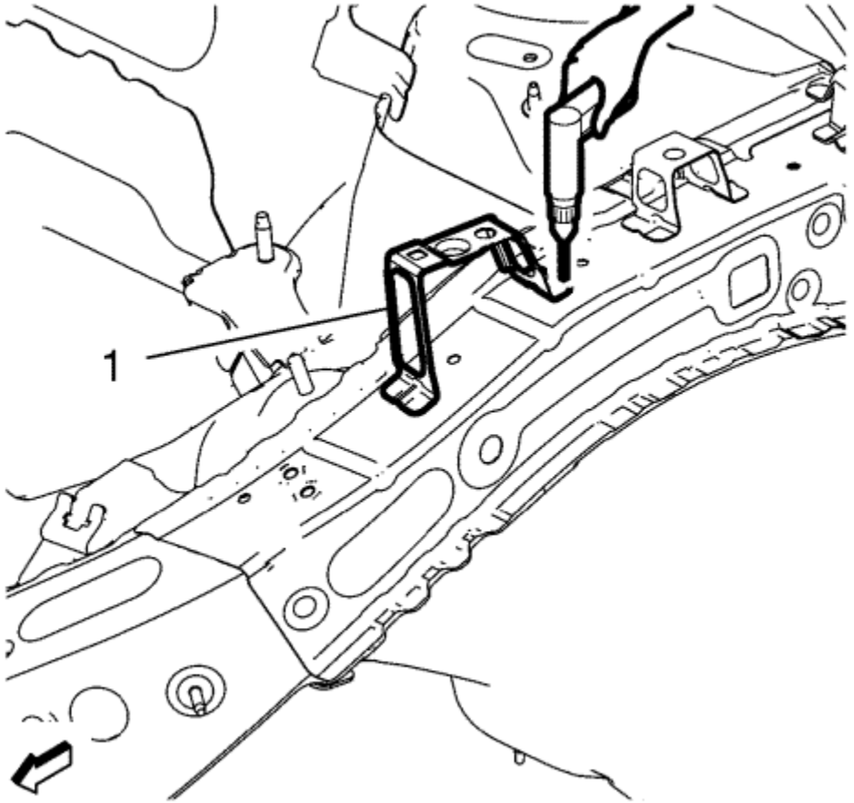

2. Drill holes **4.2 mm** for rivets to front wing front bracket (1) and front compartment upper side rail.
3. Clean and prepare the attaching surfaces.

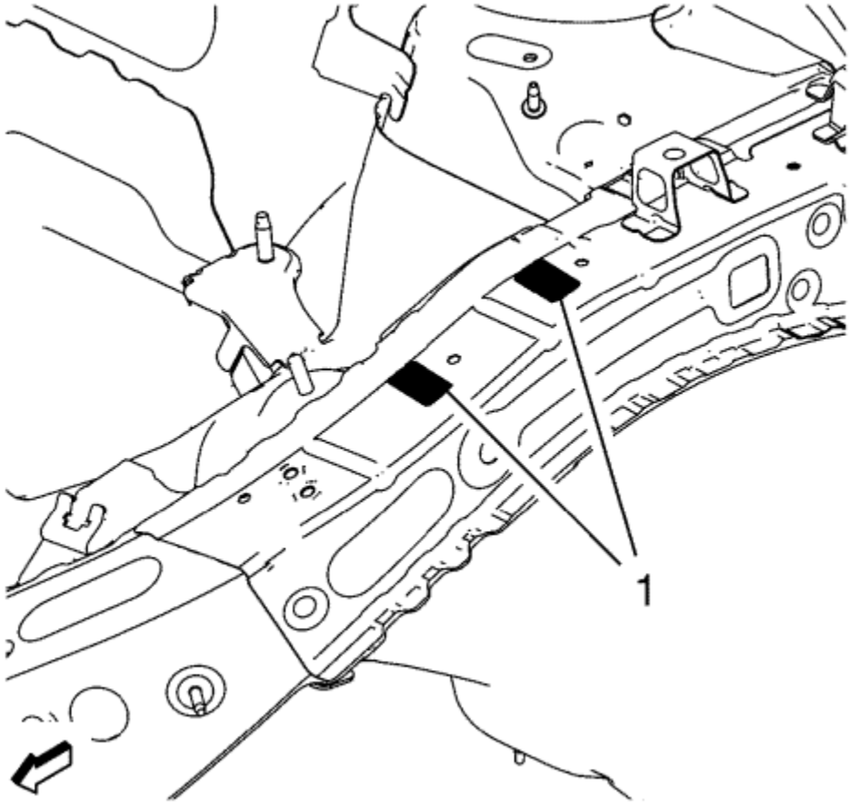

4. Apply sealer part no.: 93165589 to attaching surfaces (1).

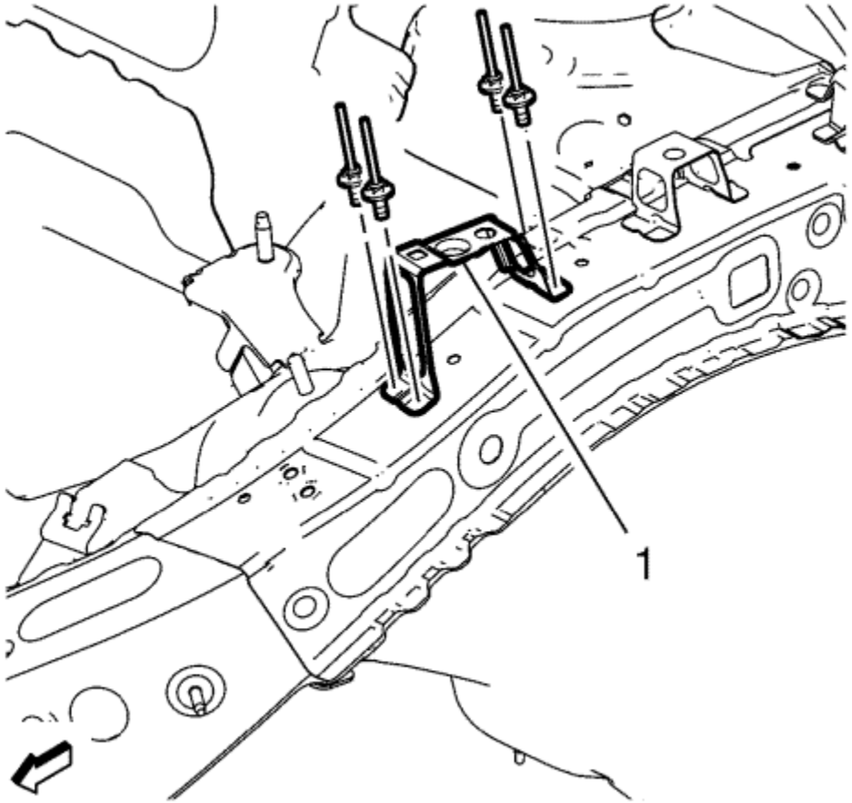

5. Rivet the front wing front bracket (1) with waterproof steel rivets part no.: 93174636.
6. Use sealer and seal the rivet heads.
7. Apply the sealers and anti-corrosion materials to the repair area as necessary.
8. Paint the repaired area.
9. Install all related panels and components.
10. Connect the negative battery cable. Refer to Battery Negative Cable Disconnection and Connection .

© Copyright Chevrolet. All rights reserved

Front Rail Replacement

Danger: Always perform the High Voltage Disabling procedure prior to servicing any High Voltage component or connection. Personal Protection Equipment (PPE) and proper procedures must be followed.

The High Voltage Disabling procedure will perform the following tasks:

- Identify how to disable high voltage.
- Identify how to test for the presence of high voltage.
- Identify condition under which high voltage is always present and personal protection equipment (PPE) and proper procedures must be followed.

Before working on any high voltage system, be sure to wear the following Personal Protection Equipment:

- Safety glasses with appropriate side shields when within 15 meters (50 feet) of the vehicle, either indoors or outdoors.
- Certified and up-to-date Class "0" Insulation gloves rated at 1000V with leather protectors.
  - Visually and functionally inspect the gloves before use.
  - Wear the Insulation gloves with leather protectors at all times when working with the high voltage battery assembly, whether the system is energised or not.

Failure to follow the procedures exactly as written may result in serious injury or death.

Removal Procedure

Warning : Refer to Approved Equipment for Collision Repair Warning in the Preface section.

1. Disable the SIR system. Refer to SIR Disabling and Enabling .
2. Inspect the high voltage system. Refer to High Voltage System Inspection .
3. Remove all related panels and components.
4. Repair as much of the damage as possible to factory specifications. Refer to Dimensions - Body .
5. Note the location and remove the sealers and anti-corrosion materials from the repair area. Refer to Anti-Corrosion Treatment and Repair .

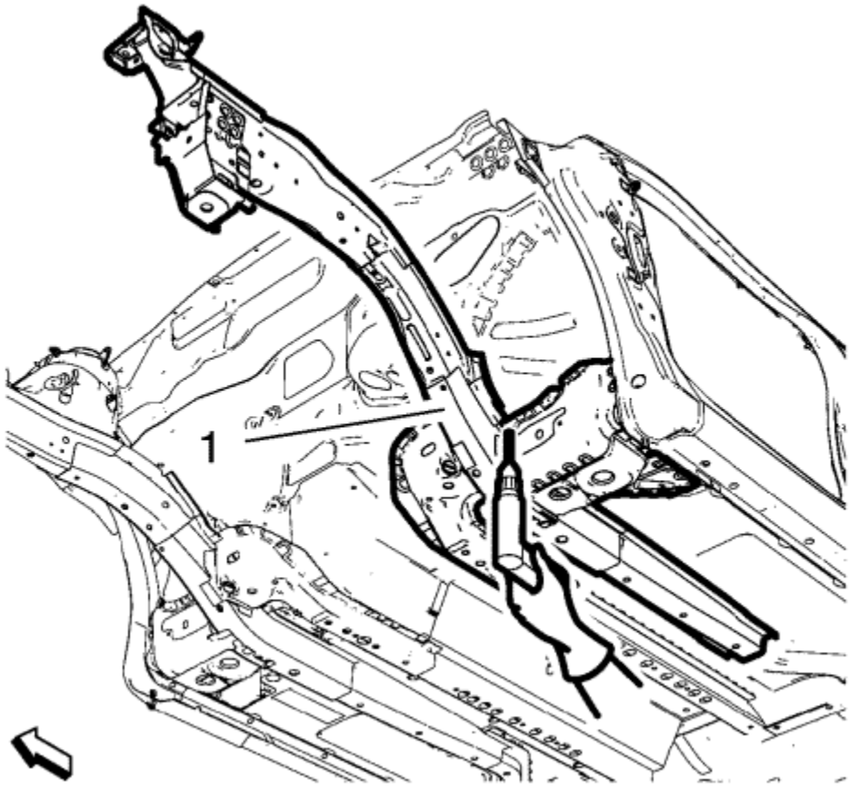

Note : Do not damage any inner panels or reinforcements.

6. Locate and drill out all factory welds. Note the number and location of the welds for installation of the front rail (1).

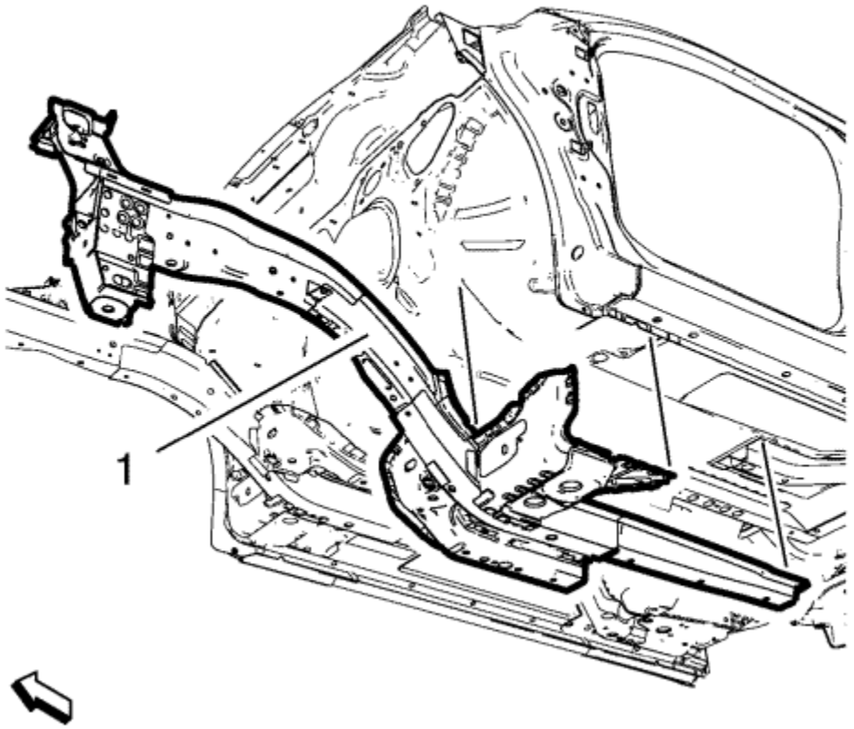

7. Remove the damaged front rail (1).

Installation Procedure

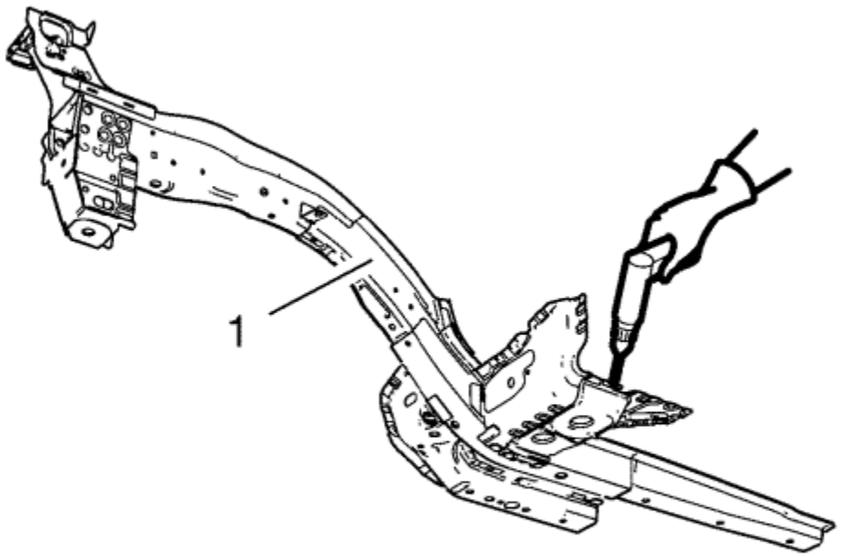

Note: If the location of the original plug weld holes cannot be determined, space the plug weld holes every 40 mm (1½ in) apart.

Some panels may have structural weld-thru adhesive. Replace the weld-thru adhesive with an additional spot weld between each factory spot weld.

1. Drill 8 mm (5/16 in) plug weld holes in the service part front rail (1) as necessary in the locations noted from the original panel.
2. Prepare all mating surfaces as necessary.
3. Apply GM-approved Weld-Thru Coating or equivalent to all mating surfaces. Refer to Anti-Corrosion Treatment and Repair .

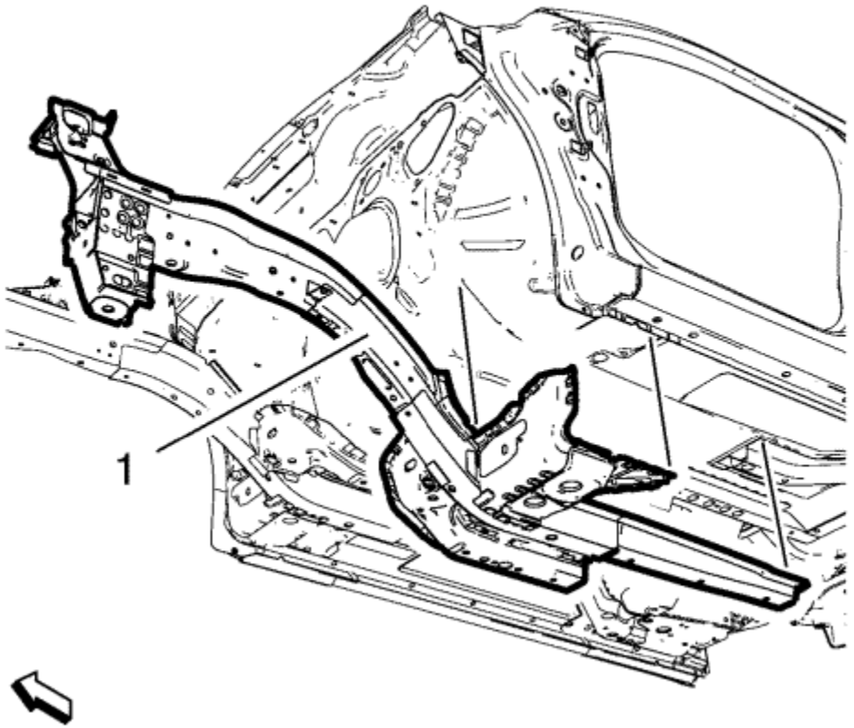

4. Position the front rail (1) to the vehicle using 3-dimensional measuring equipment. Clamp the rail in place.

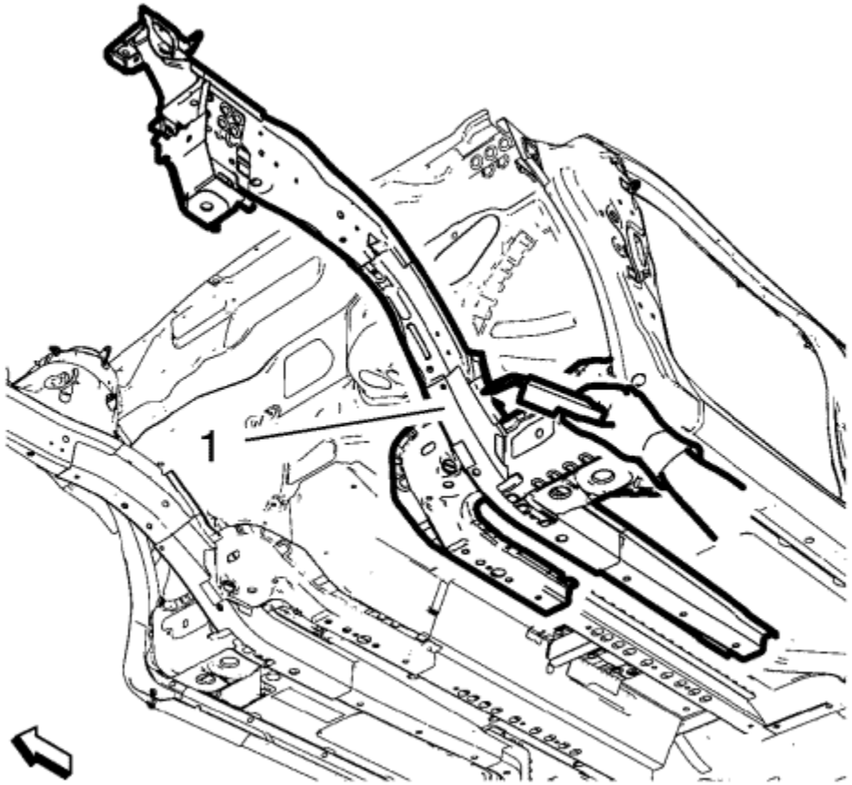

5. Plug weld the front rail (1) accordingly.
6. Clean and prepare all welded surfaces.
7. Install all related panels and components.
8. Apply the sealers and anti-corrosion materials to the repair area, as necessary. Refer to Anti-Corrosion Treatment and Repair .
9. Paint the repair area. Refer to Basecoat/Clearcoat Paint Systems .
10. If disabled, enable the high voltage system. Refer to High Voltage Enabling .
11. Enable the SIR system. Refer to SIR Disabling and Enabling .

&#169© Copyright Chevrolet. All rights reserved

Centre Pillar Inner Panel Replacement

Removal Procedure

Warning : Refer to Approved Equipment for Collision Repair Warning in the Preface section.

Warning : Refer to Glass and Sheet Metal Handling Warning in the Preface section.

1. Disable the SIR system. Refer to SIR Disabling and Enabling .

   Danger: Always perform the High Voltage Disabling procedure prior to servicing any High Voltage component or connection. Personal Protection Equipment (PPE) and proper procedures must be followed.

   The High Voltage Disabling procedure will perform the following tasks:

   - Identify how to disable high voltage.
   - Identify how to test for the presence of high voltage.
   - Identify condition under which high voltage is always present and personal protection equipment (PPE) and proper procedures must be followed.

   Failure to follow the procedures exactly as written may result in serious injury or death.

2. Disable the high voltage system. Refer to High Voltage Disabling .
3. Remove all related panels and components.
4. Visually inspect the damage. Repair as much of the damage as possible.
5. Remove the sealers and anti-corrosion materials from the repair area as necessary.

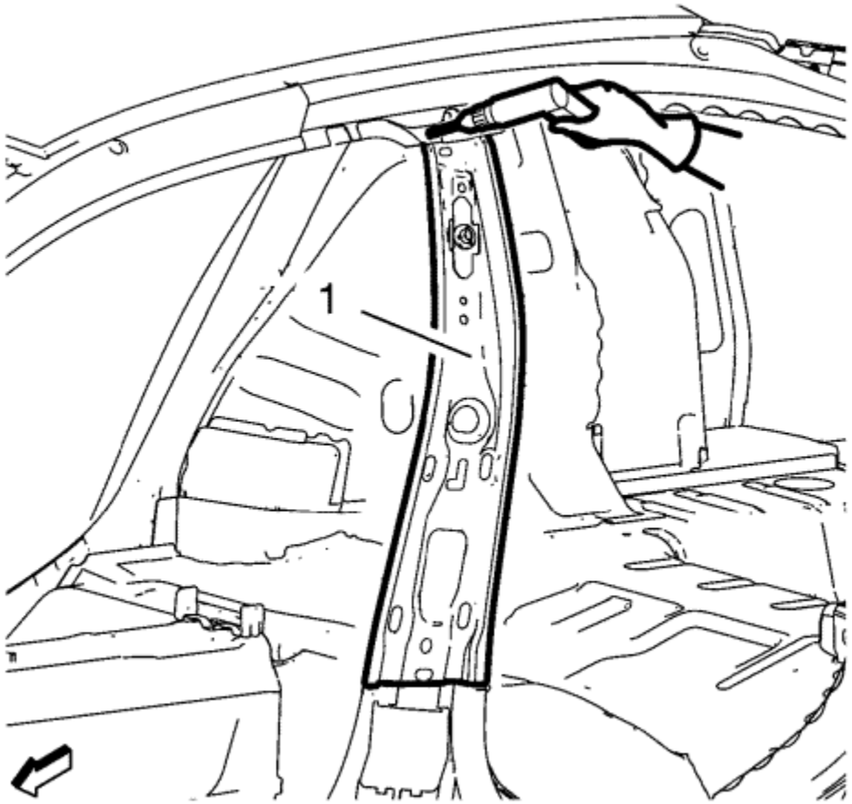

6. Locate and mark all the necessary factory welds of the centre pillar inner panel (1).
7. Drill all factory welds. Note the number and location of welds for installation of the service assembly.

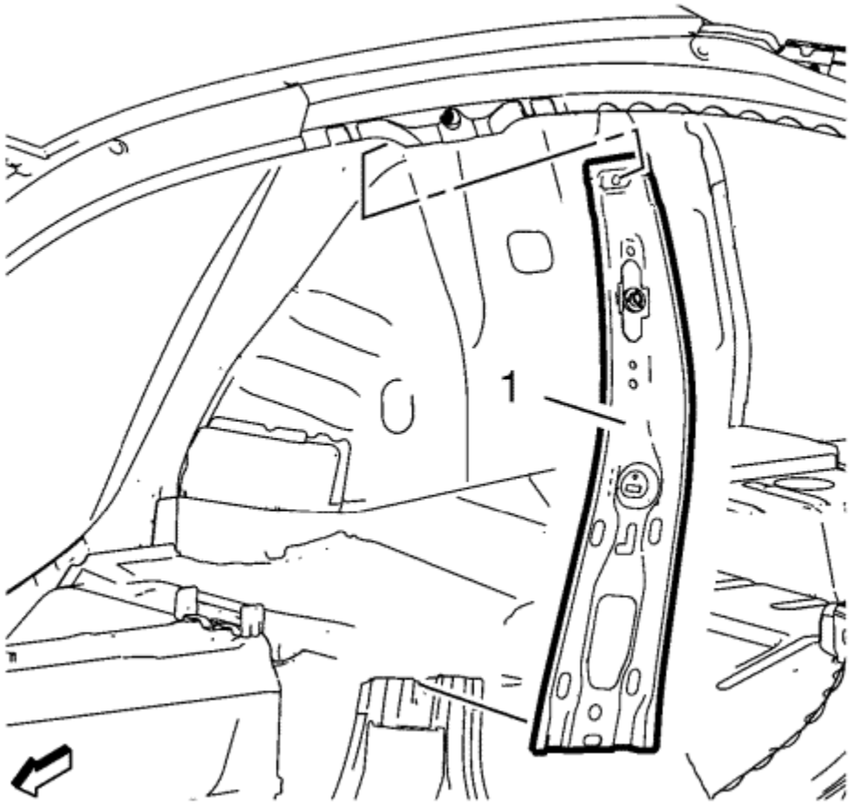

8. Remove the damaged centre pillar inner panel (1).

Installation Procedure

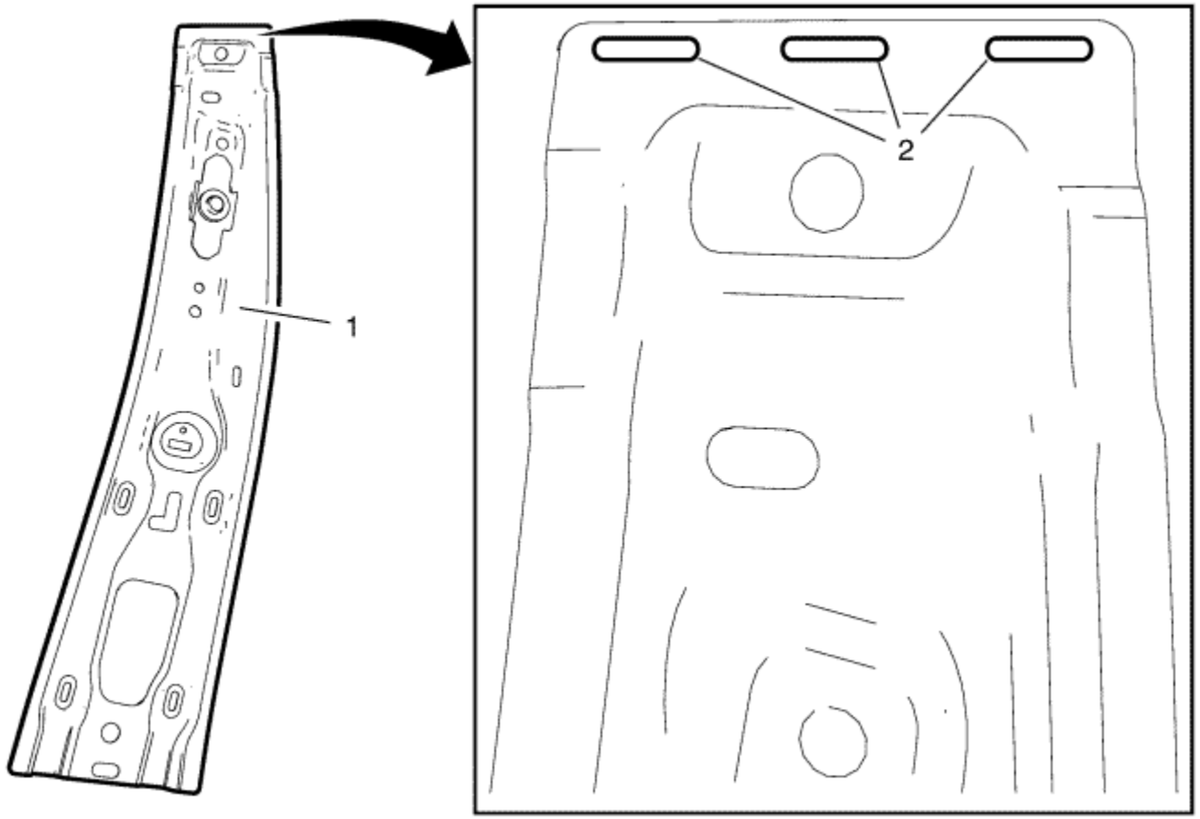

1. Create 3 **5x18 mm** slots (2) for MIG-brazing to the centre pillar inner panel (1).
2. Prepare all mating surfaces as necessary.
3. Clean and prepare the attaching surfaces for spot welding and brazing.

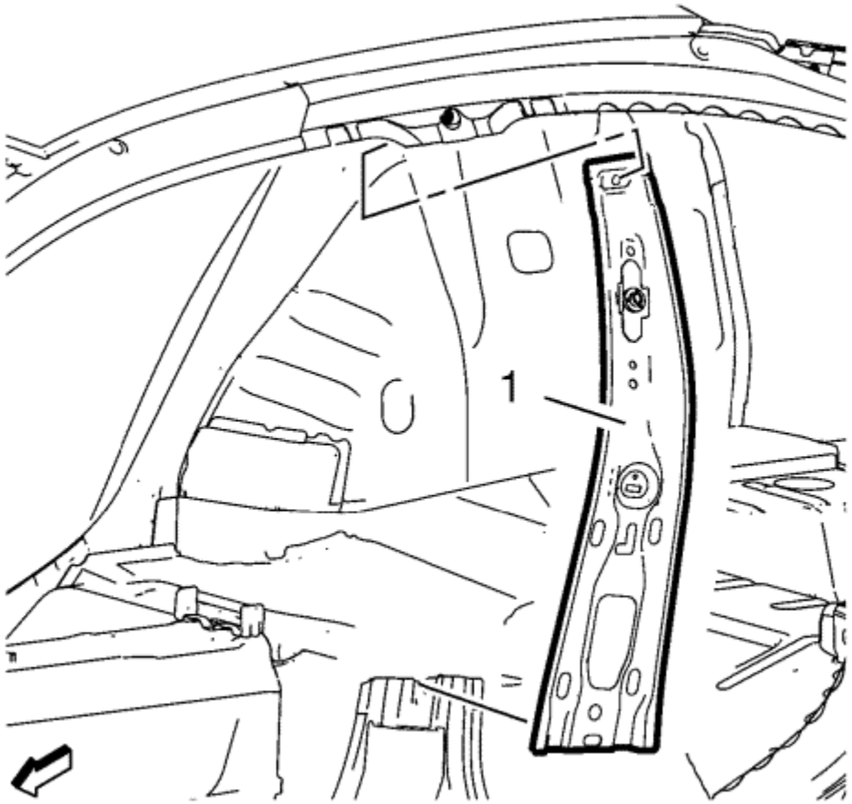

4. Position the centre pillar inner panel (1) on the vehicle.
5. Verify the fit of the center pillar inner panel.
6. Clamp the center pillar inner panel into position.

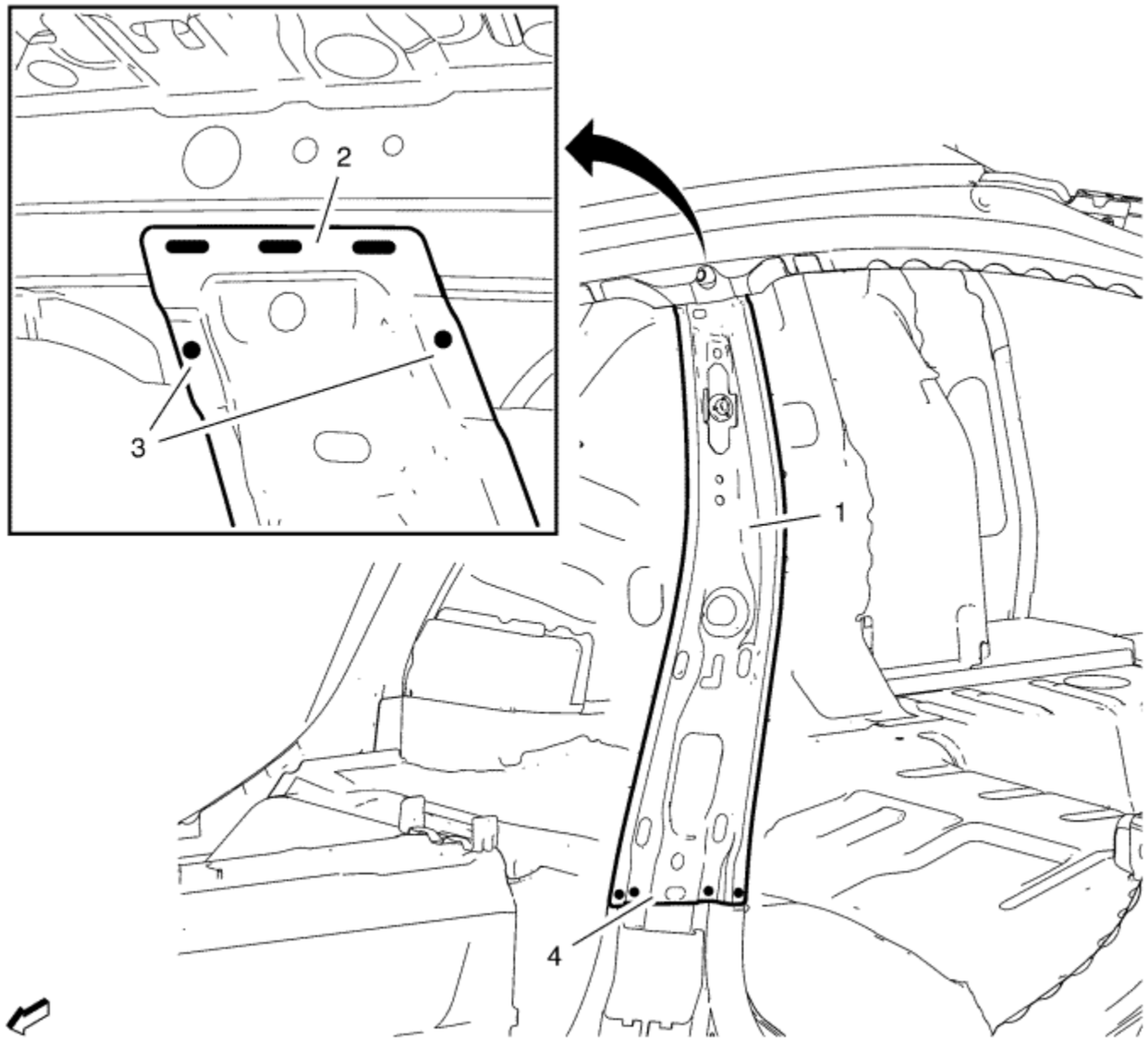

7. Install the centre pillar inner panel (1) accordingly.
   7.1. Upper flange (2) - 3 **5x18 mm** slot brazes
   7.2. Upper flange (3) - 2 spot welds
   7.3. Lower flange (4) - 4 spot welds
8. Apply the sealers and anti-corrosion materials to the repair area as necessary.
9. Paint the repaired area.
10. Install all related panels and components.

11. Enable the high voltage system. Refer to High Voltage Enabling .
12. Enable the SIR system. Refer to SIR Disabling and Enabling .

&#169© Copyright Chevrolet. All rights reserved

Centre Pillar Reinforcement Replacement

Danger: Always perform the High Voltage Disabling procedure prior to servicing any High Voltage component or connection. Personal Protection Equipment (PPE) and proper procedures must be followed.

The High Voltage Disabling procedure will perform the following tasks:

- Identify how to disable high voltage.
- Identify how to test for the presence of high voltage.
- Identify condition under which high voltage is always present and personal protection equipment (PPE) and proper procedures must be followed.

Before working on any high voltage system, be sure to wear the following Personal Protection Equipment:

- Safety glasses with appropriate side shields when within 15 meters (50 feet) of the vehicle, either indoors or outdoors.
- Certified and up-to-date Class "0" Insulation gloves rated at 1000V with leather protectors.
  - Visually and functionally inspect the gloves before use.
  - Wear the Insulation gloves with leather protectors at all times when working with the high voltage battery assembly, whether the system is energised or not.

Failure to follow the procedures exactly as written may result in serious injury or death.

Removal Procedure

Warning : Refer to Approved Equipment for Collision Repair Warning in the Preface section.

Warning : Refer to Glass and Sheet Metal Handling Warning in the Preface section.

1. Disable the SIR system. Refer to SIR Disabling and Enabling .
2. Inspect the high voltage system. Refer to High Voltage System Inspection .
3. Disable the high voltage system. Refer to High Voltage Disabling .
4. Remove all related panels and components.
5. Visually inspect the damage. Repair as much of the damage as possible.
6. Remove the sealers and anti-corrosion materials from the repair area as necessary.

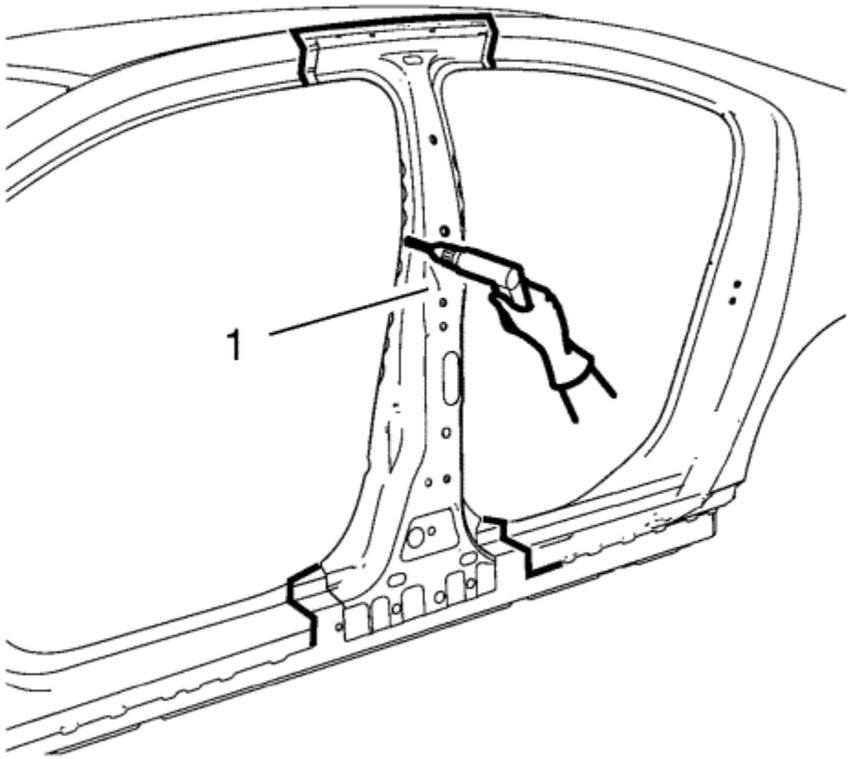

7. Locate and mark all the necessary factory welds of the centre pillar reinforcement (1).
8. Drill all factory welds. Note the number and location of welds for installation of the service assembly.

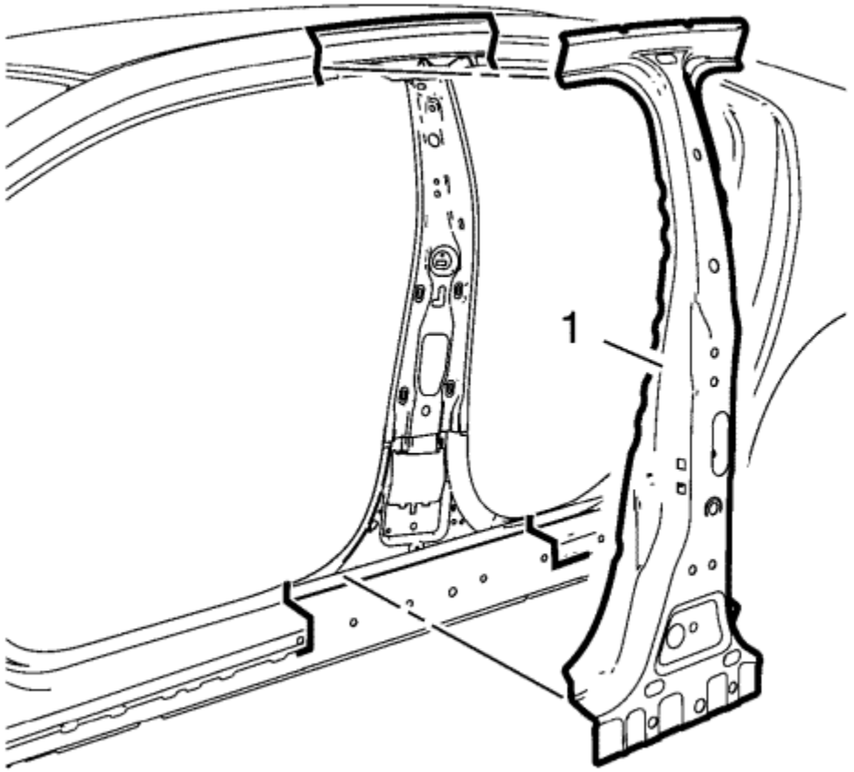

9. Remove the damaged centre pillar reinforcement (1).

Installation Procedure

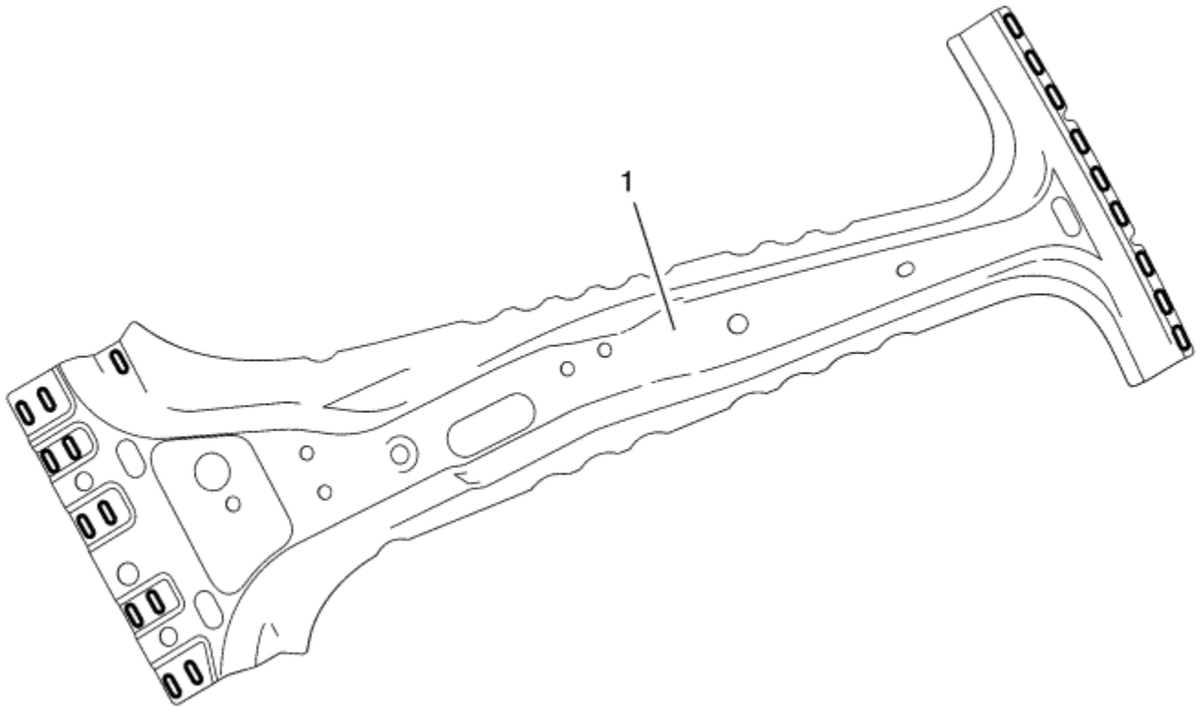

1. Create 20 **6 x 20 mm (4/16 x 11/16 in)** slots for MIG-brazing to the centre pillar reinforcement (1).
2. Prepare all mating surfaces as necessary.
3. Clean and prepare the attaching surfaces for spot welding.

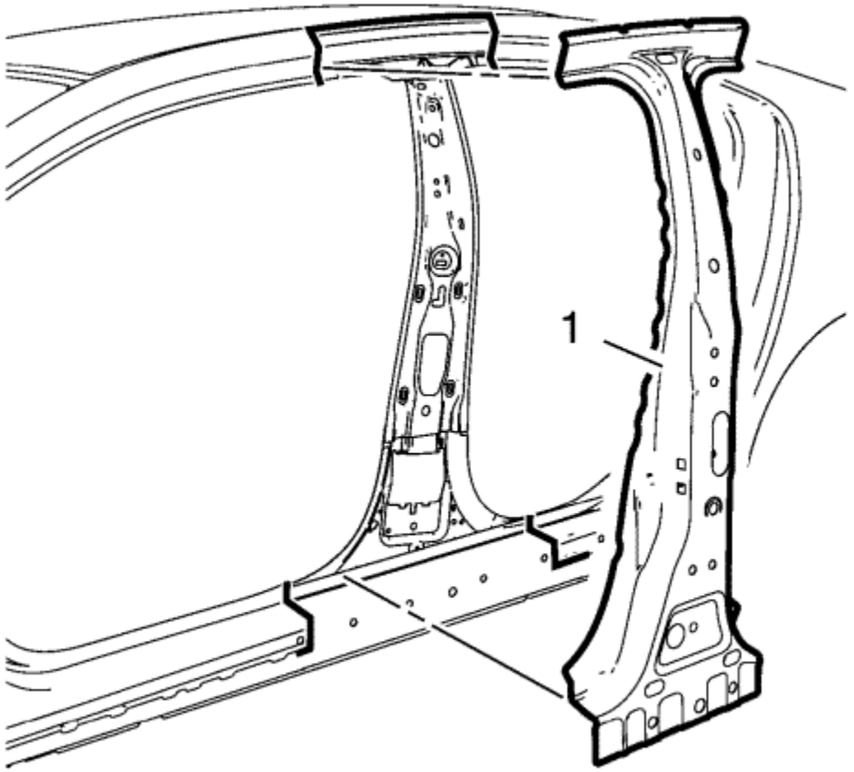

4. Position the centre pillar reinforcement (1) on the vehicle.
5. Verify the fit of the centre pillar reinforcement.
6. Clamp the centre pillar reinforcement into position.

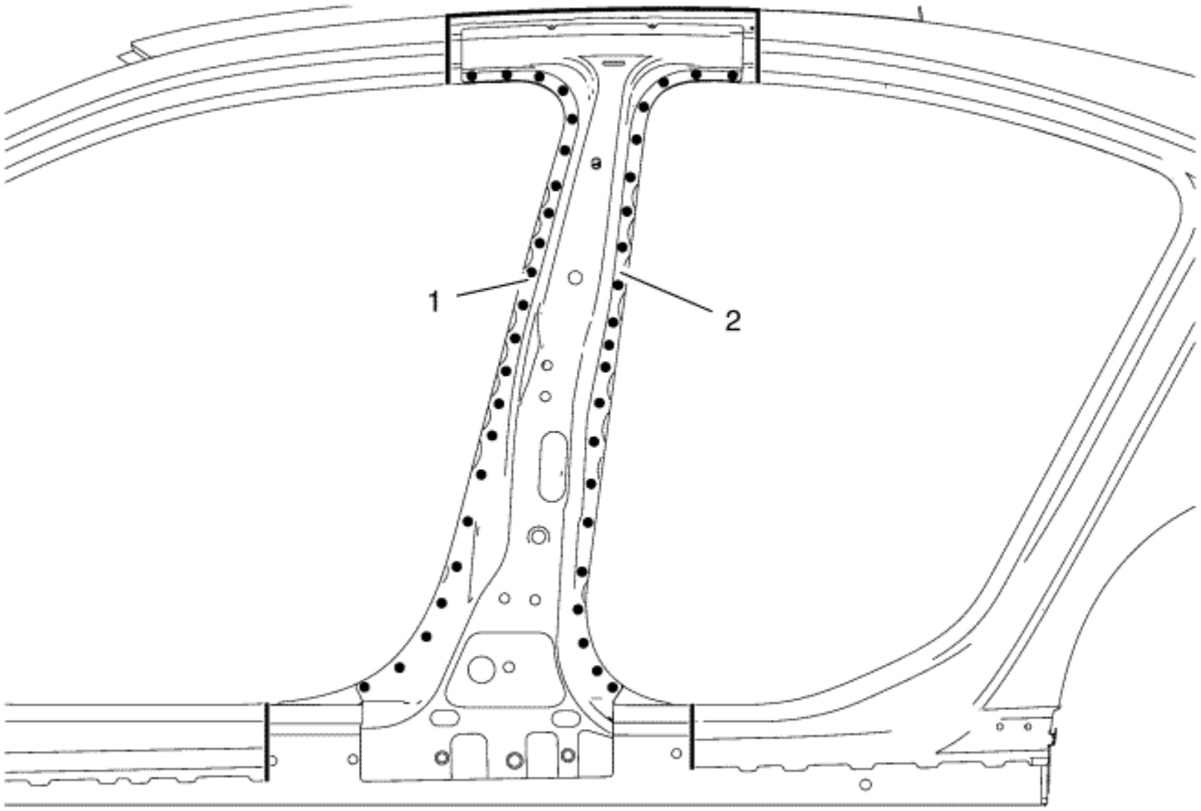

7. Spot weld the centre pillar reinforcement accordingly.
   7.1. Flange front side door opening (1) - 22 spot welds.
   7.2. Flange rear side door opening (2) - 21 spot welds.

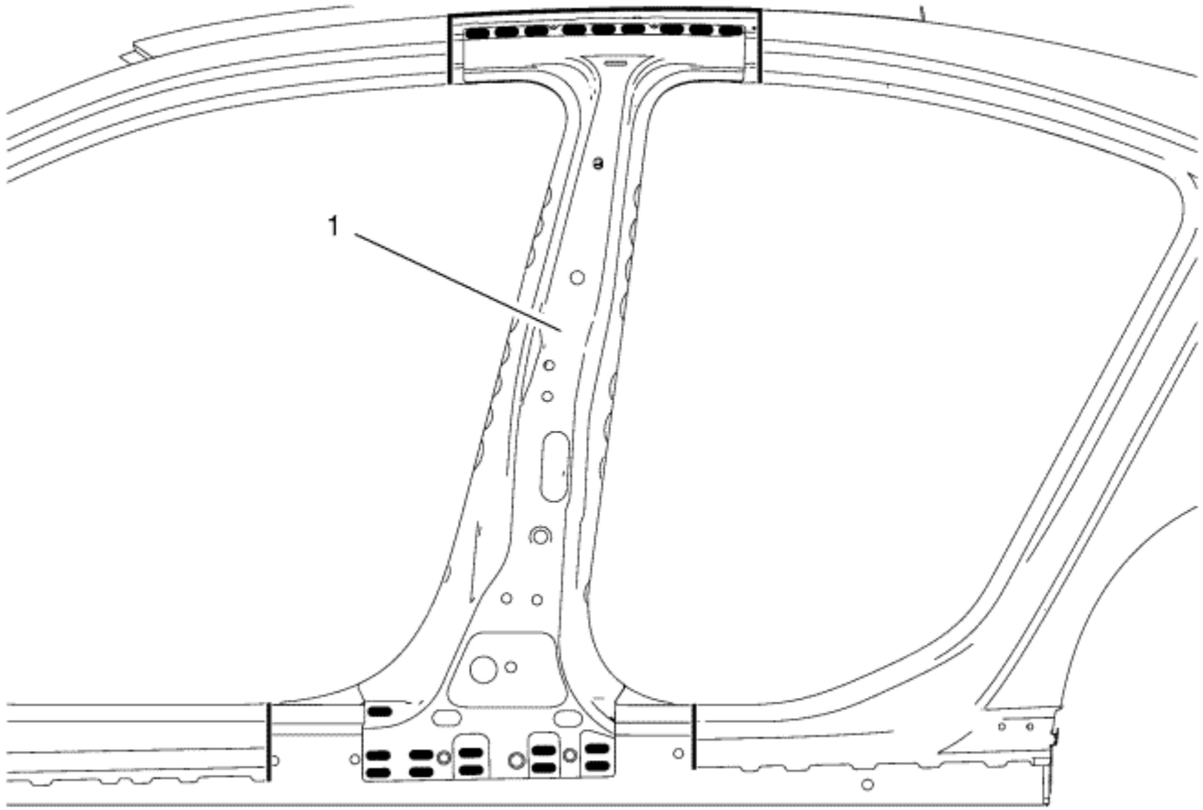

8. Braze the centre pillar reinforcement (1) with 20 **6 x 20 mm (4/16 x 11/16 in)** slot brazes accordingly.
9. Apply the sealers and anti-corrosion materials to the repair area as necessary.
10. Paint the repaired area.
11. Install all related panels and components.
12. Enable the high voltage system. Refer to High Voltage Enabling .
13. Enable the SIR system. Refer to SIR Disabling and Enabling .

&#169© Copyright Chevrolet. All rights reserved

Centre Pillar Sectioning - Outer

Danger: Always perform the High Voltage Disabling procedure prior to servicing any High Voltage component or connection. Personal Protection Equipment (PPE) and proper procedures must be followed.

The High Voltage Disabling procedure will perform the following tasks:

- Identify how to disable high voltage.
- Identify how to test for the presence of high voltage.
- Identify condition under which high voltage is always present and personal protection equipment (PPE) and proper procedures must be followed.

Before working on any high voltage system, be sure to wear the following Personal Protection Equipment:

- Safety glasses with appropriate side shields when within 15 meters (50 feet) of the vehicle, either indoors or outdoors.
- Certified and up-to-date Class "0" Insulation gloves rated at 1000V with leather protectors.
  - Visually and functionally inspect the gloves before use.
  - Wear the Insulation gloves with leather protectors at all times when working with the high voltage battery assembly, whether the system is energised or not.

Failure to follow the procedures exactly as written may result in serious injury or death.

Removal Procedure

Warning : Refer to Approved Equipment for Collision Repair Warning in the Preface section.

Warning : Refer to Collision Sectioning Warning in the Preface section.

Warning : Refer to Glass and Sheet Metal Handling Warning in the Preface section.

1. Disable the SIR system. Refer to SIR Disabling and Enabling .
2. Inspect the high voltage system. Refer to High Voltage System Inspection .
3. Disable the high voltage system. Refer to High Voltage Disabling .
4. Remove all related panels and components.
5. Visually inspect the damage. Repair as much of the damage as possible.
6. Remove the sealers and anti-corrosion materials from the repair area as necessary.

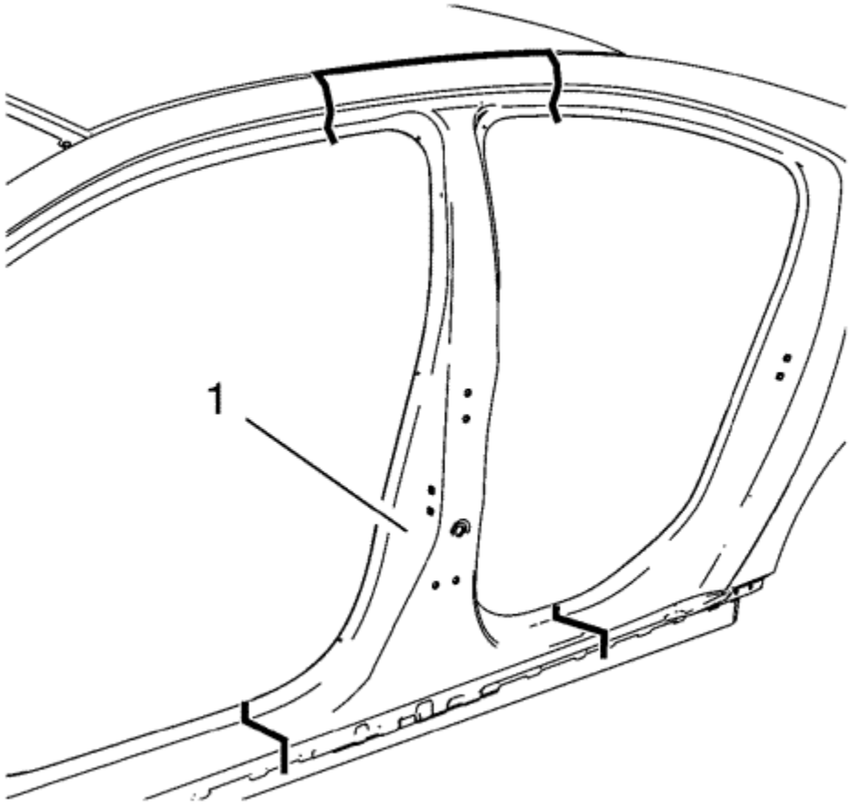

7. Create cut lines on the centre pillar (1).

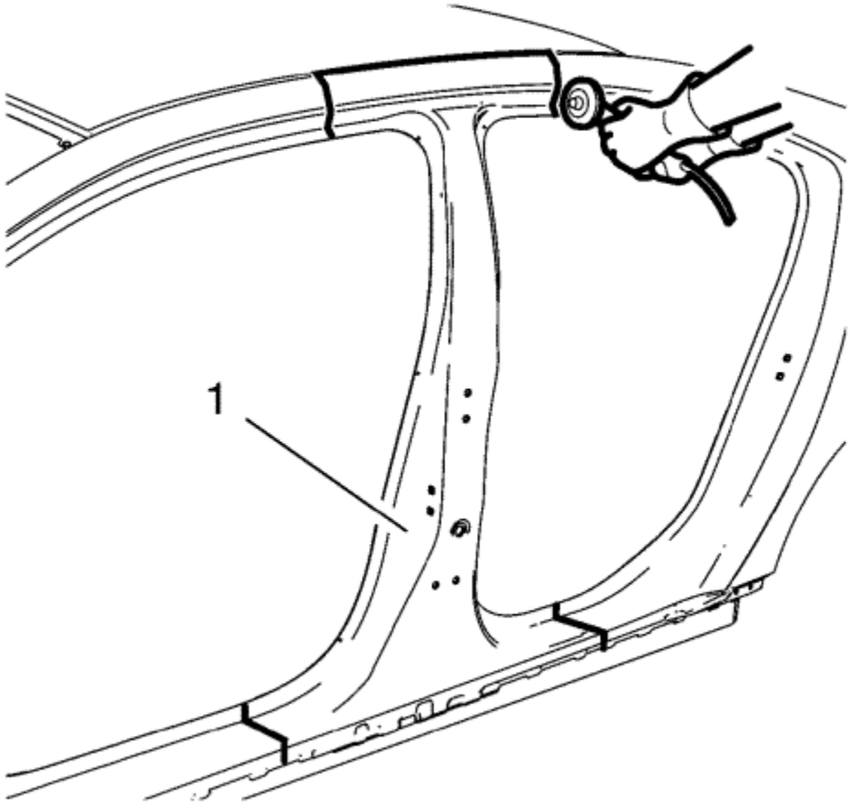

Note : Do not damage any inner panels or reinforcements.

8. Cut the centre pillar (1) where the sectioning is to be performed.

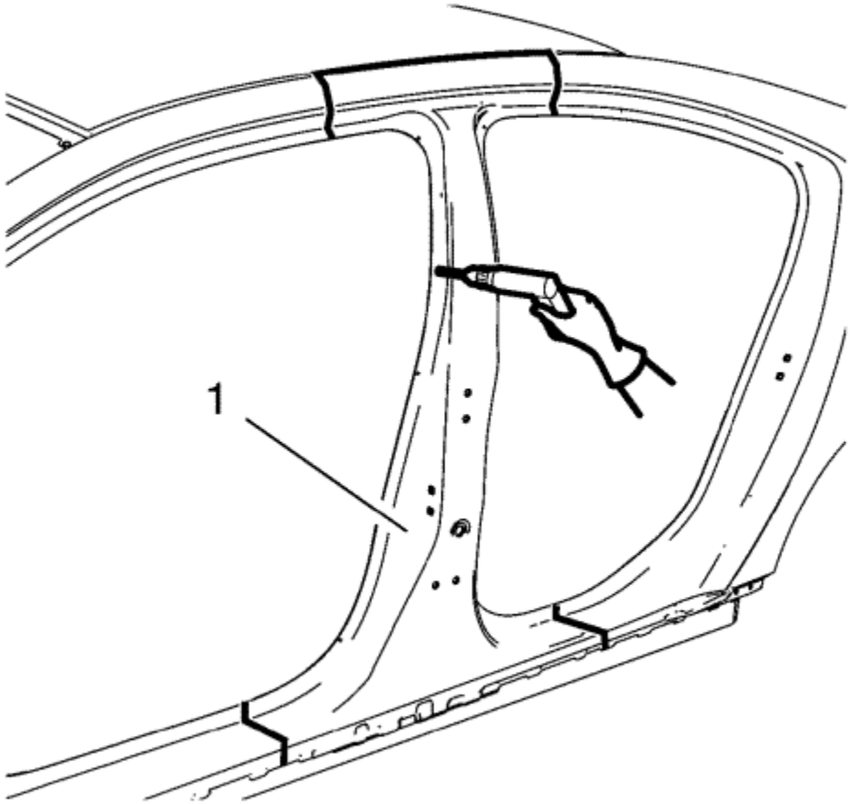

9. Locate and mark all the necessary factory welds of the centre pillar (1).
10. Drill all factory welds. Note the number and location of welds for installation of the service assembly.

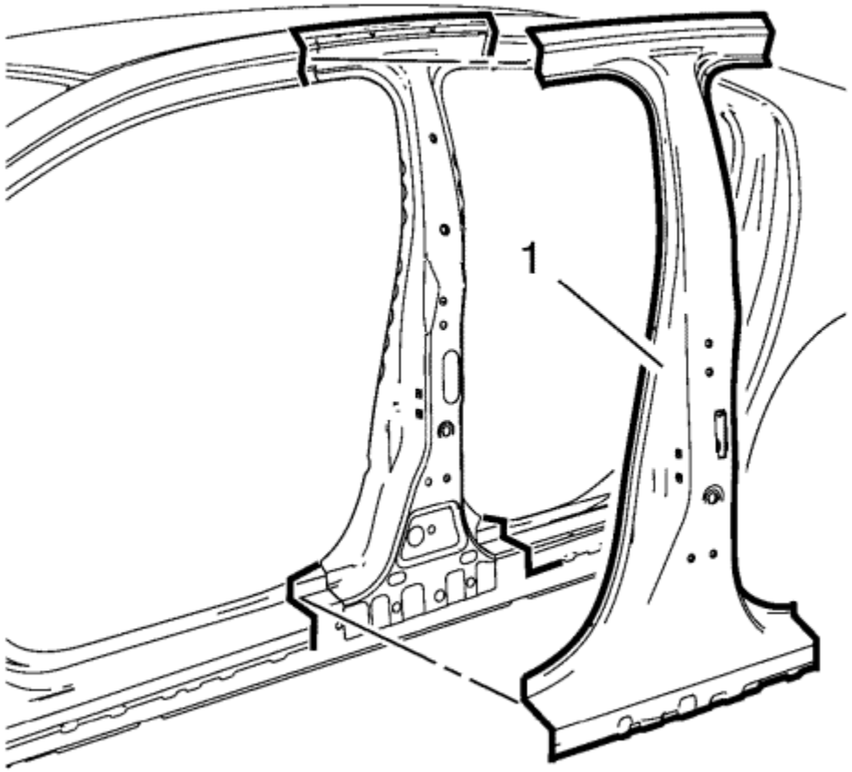

11. Remove the damaged centre pillar (1).

Installation Procedure

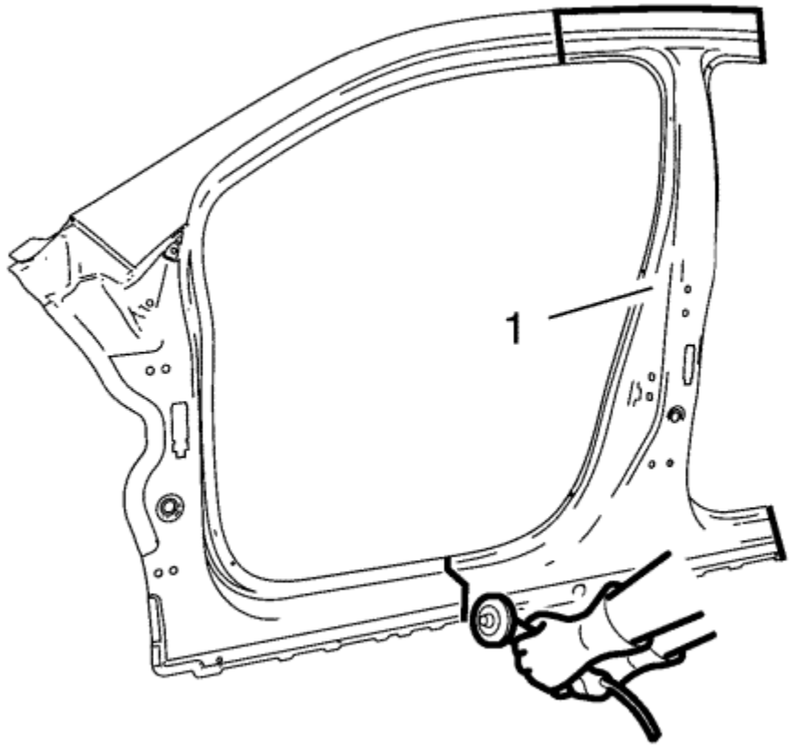

1. Cut the centre pillar (1) in corresponding locations to fit the remaining original panel. The sectioning joint should be trimmed to allow a gap of one-and-one-half-times the metal thickness at the sectioning joint.
2. Prepare all mating surfaces as necessary.
3. Clean and prepare the attaching surfaces for spot welding.

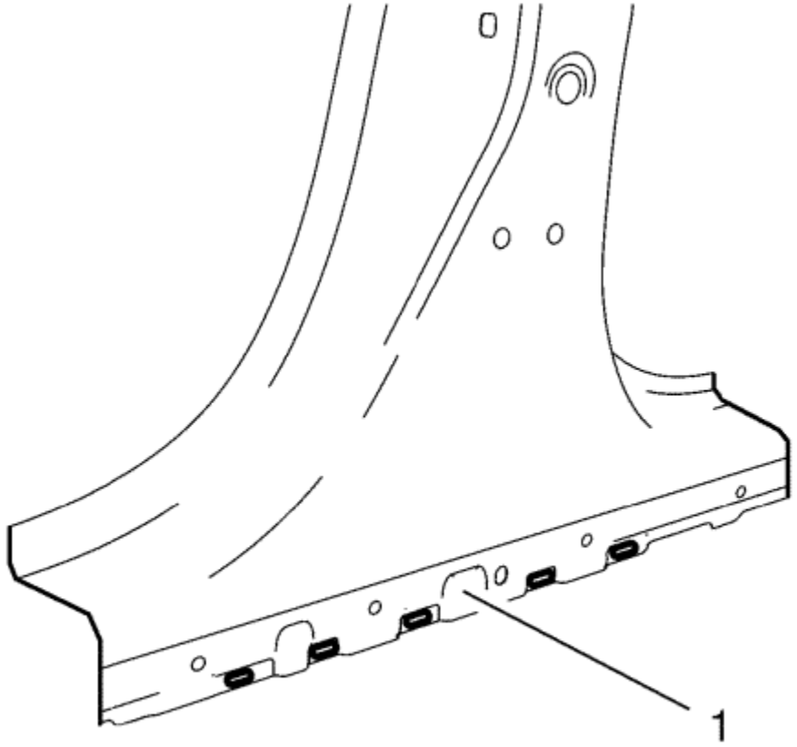

4. Create 5 **5 x 18 mm (4/16 x 11/16 in)** slots for MIG-brazing to the centre pillar (1).

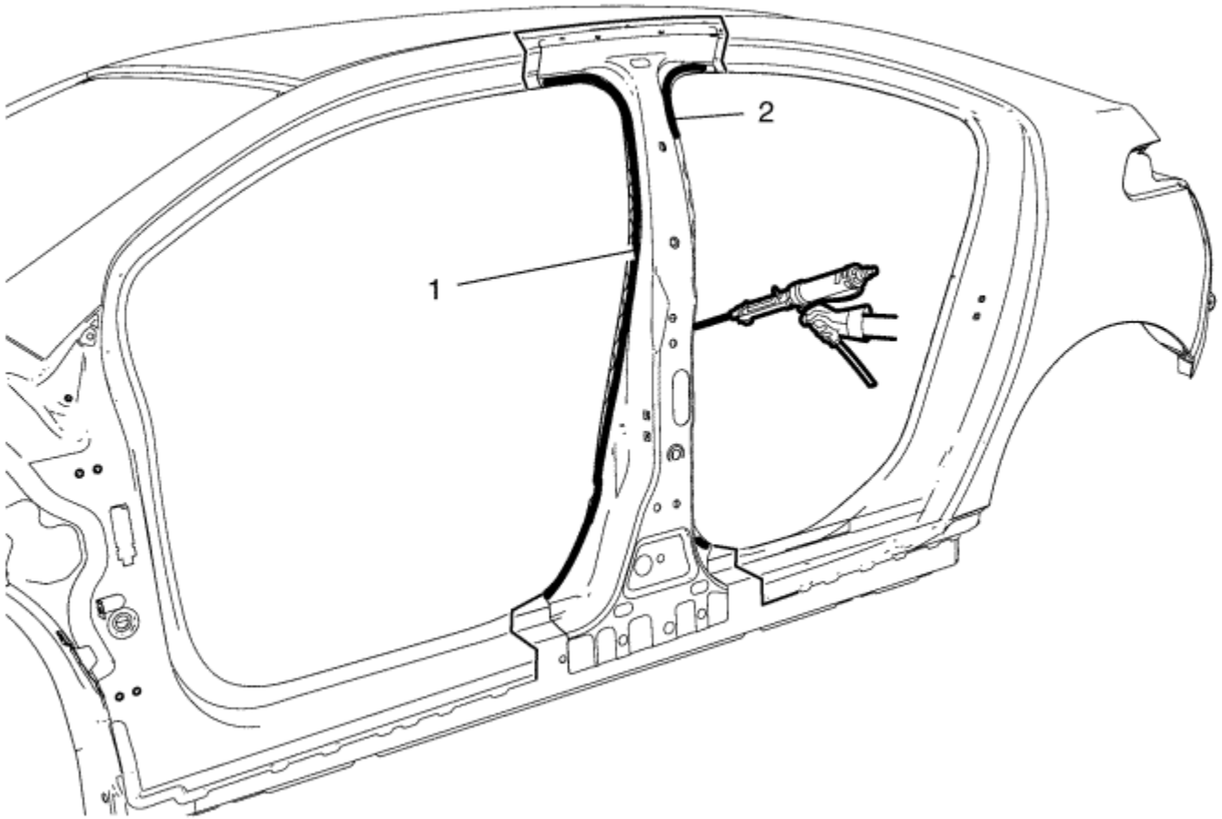

5. Apply structural adhesive to centre pillar reinforcement (1, 2).

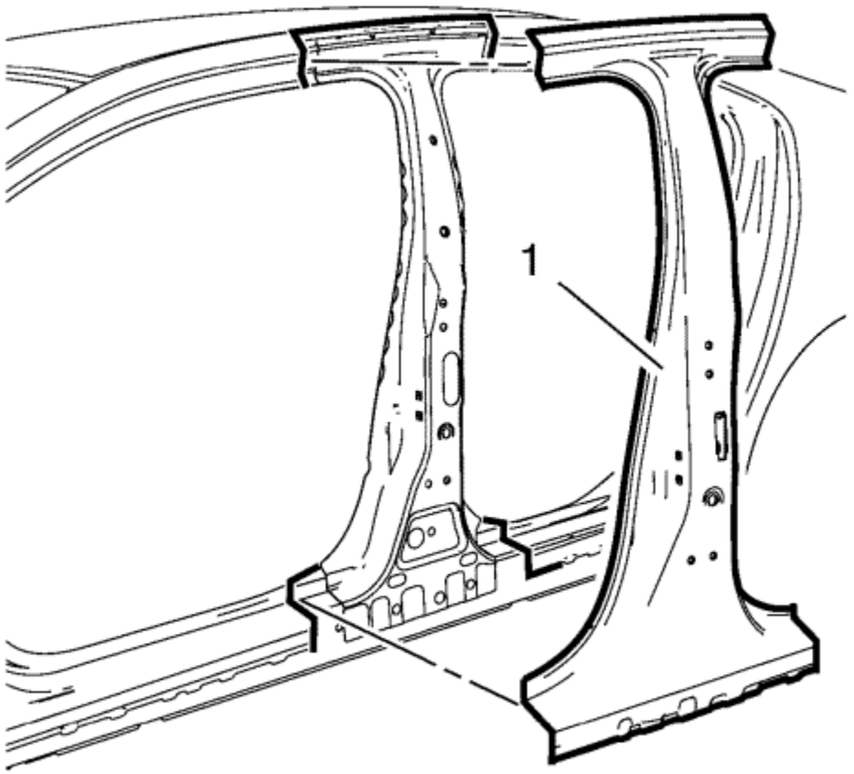

6. Position the centre pillar (1) on the vehicle.
7. Verify the fit of the centre pillar.
8. Clamp the centre pillar into position.

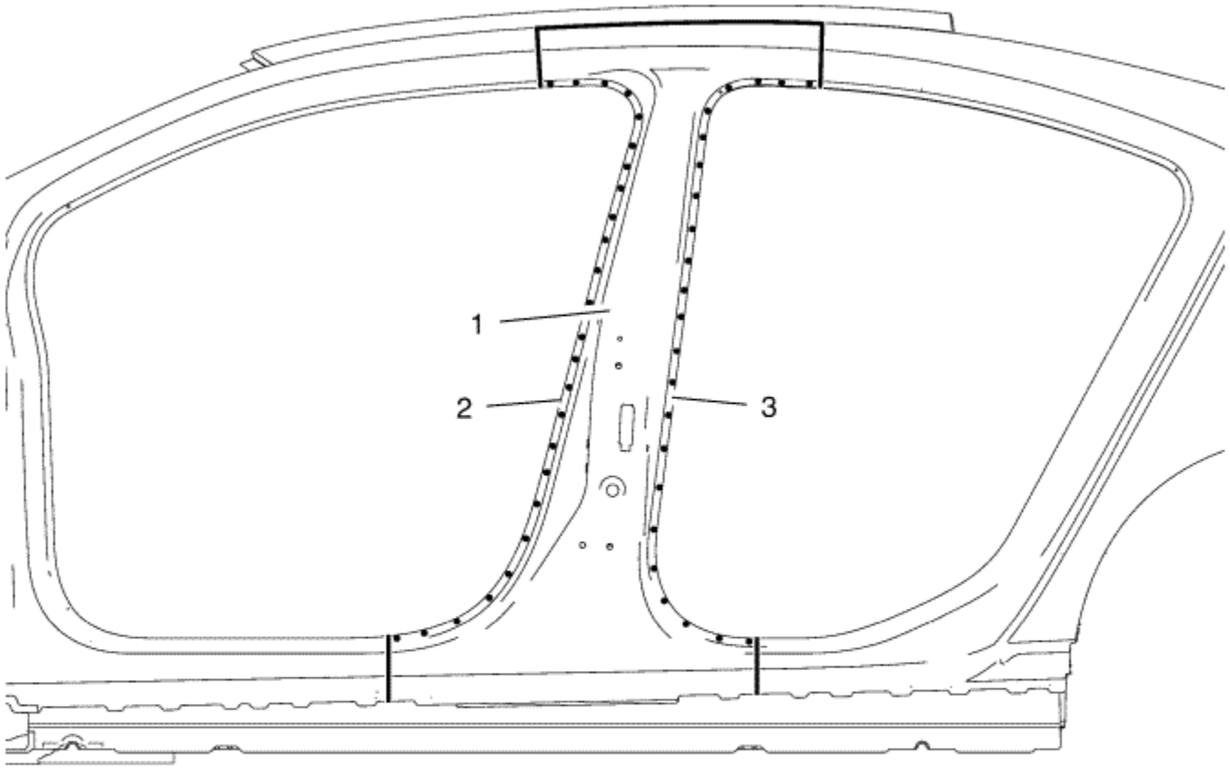

9. Spot weld the centre pillar (1) accordingly.
   9.1. Flange front side door opening (2) - 25 spot welds.
   9.2. Flange rear side door opening (3) - 23 spot welds.

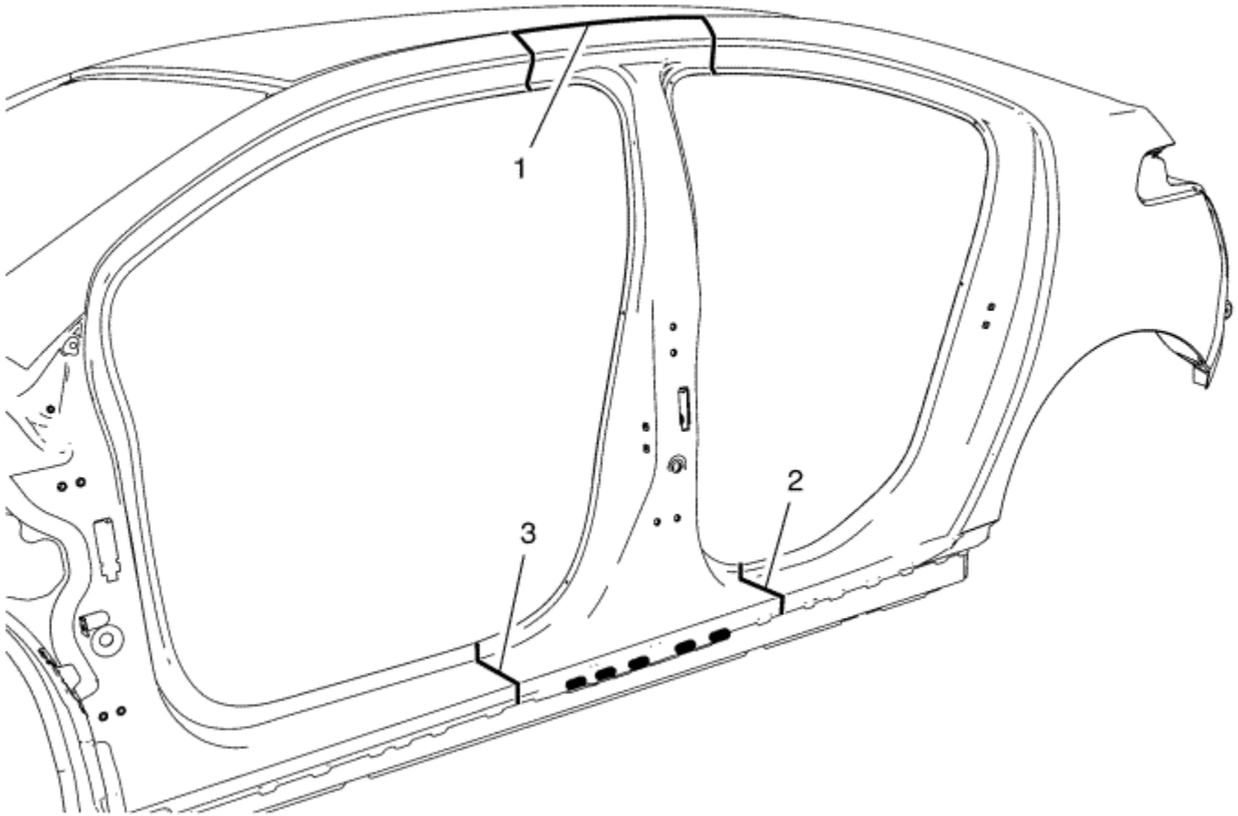

10. Braze the centre pillar accordingly.
    10.1. Centre pillar / body side outer upper panel (1) - **750 mm**.
    10.2. Centre pillar / rocker outer panel (2) - **160 mm**.
    10.3. Centre pillar / rocker outer panel (3) - **170 mm**.
11. To create a solid braze with minimum heat distortion, make **25 mm** stitch brazes along the seam with **25 mm** gaps between them. Then go back and complete the stitch braze.
12. Apply the sealers and anti-corrosion materials to the repair area as necessary.
13. Paint the repaired area.
14. Install all related panels and components.
15. Enable the high voltage system. Refer to High Voltage Enabling .
16. Enable the SIR system. Refer to SIR Disabling and Enabling .

&#169© Copyright Chevrolet. All rights reserved

Front Side Door Outer Panel Replacement

Danger: Always perform the High Voltage Disabling procedure prior to servicing any High Voltage component or connection. Personal Protection Equipment (PPE) and proper procedures must be followed.

The High Voltage Disabling procedure will perform the following tasks:

- Identify how to disable high voltage.
- Identify how to test for the presence of high voltage.
- Identify condition under which high voltage is always present and personal protection equipment (PPE) and proper procedures must be followed.

Before working on any high voltage system, be sure to wear the following Personal Protection Equipment:

- Safety glasses with appropriate side shields when within 15 meters (50 feet) of the vehicle, either indoors or outdoors.
- Certified and up-to-date Class "0" Insulation gloves rated at 1000V with leather protectors.
  - Visually and functionally inspect the gloves before use.
  - Wear the Insulation gloves with leather protectors at all times when working with the high voltage battery assembly, whether the system is energised or not.

Failure to follow the procedures exactly as written may result in serious injury or death.

Removal Procedure

Warning : Refer to Approved Equipment for Collision Repair Warning in the Preface section.

Note : Before beginning the repair, refer to Metal Panel Bonding for proper adhesive applicator preparations and general information.

1. Disable the SIR system. Refer to SIR Disabling and Enabling .
2. Inspect the high voltage system. Refer to High Voltage System Inspection .
3. Remove the door from the vehicle. Refer to Front Side Door Replacement .
4. Remove the outer door handle.
5. Remove the outside rearview mirror.

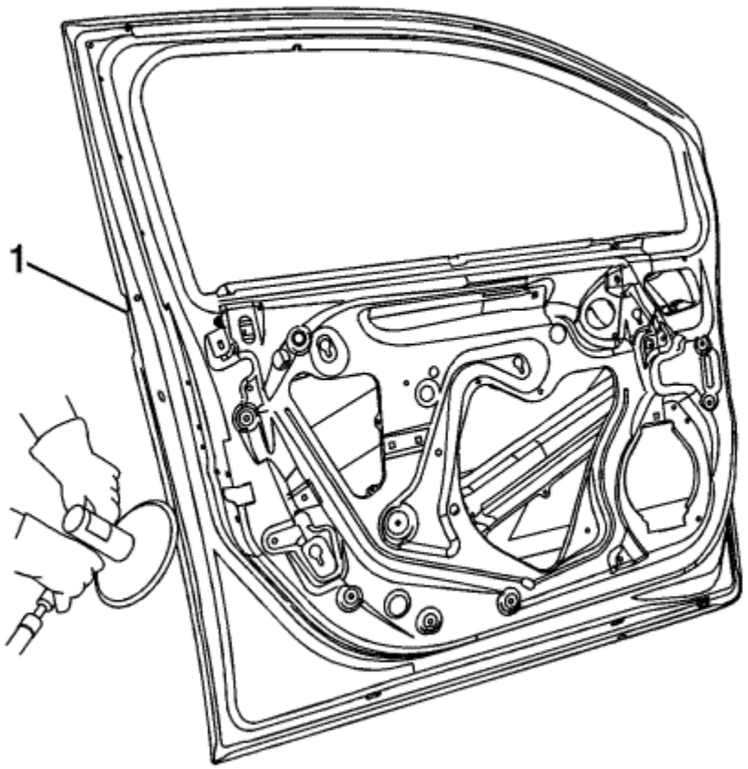

6. Grind the edges of the door outer panel (1) to separate the outer door panel from the door shell.

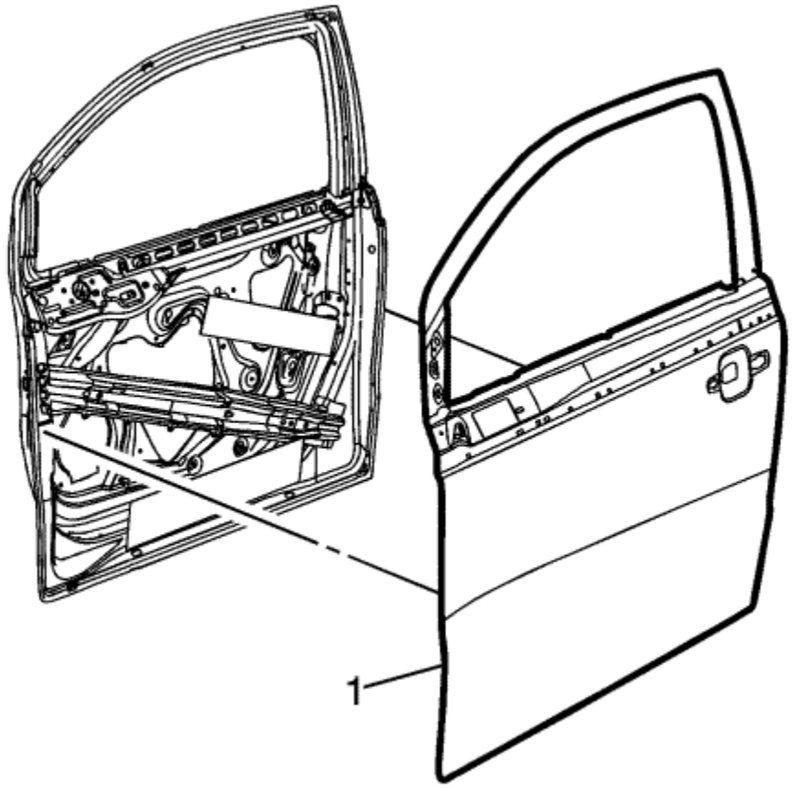

Warning : Inspection of the door guard beam for damage must be performed before replacement of the door outer panel. If damage to the door guard beam is found the door must be replaced. Failure to do so may compromise the structural integrity of the vehicle and may cause personal injury if the vehicle is involved in a collision.

7. Remove the outer door panel (1).
8. Remove the sealers and anti-corrosion materials from the repair area, as necessary. Refer to Anti-Corrosion Treatment and Repair .

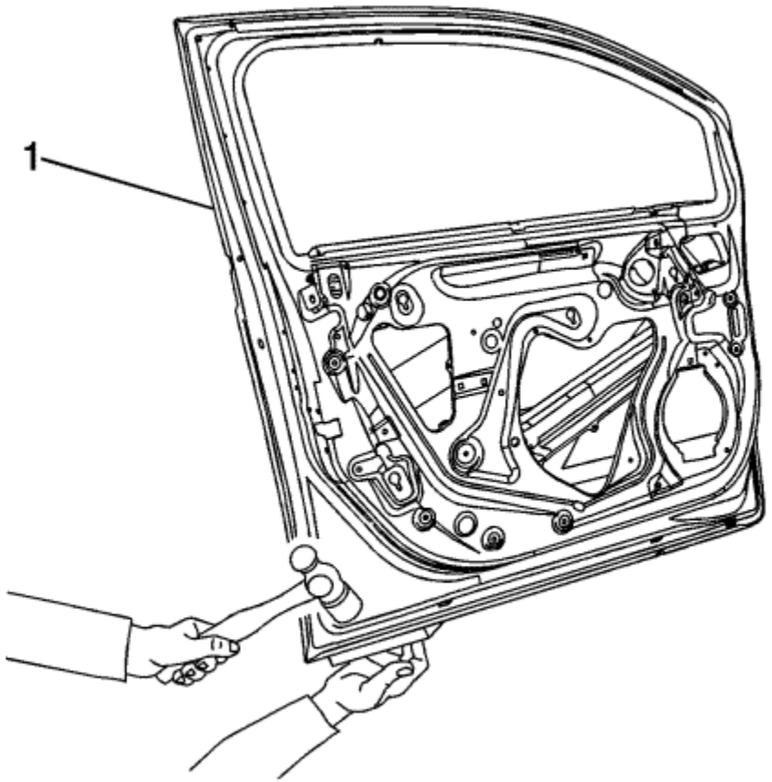

9. Straighten the edges of the door shell.

Installation Procedure

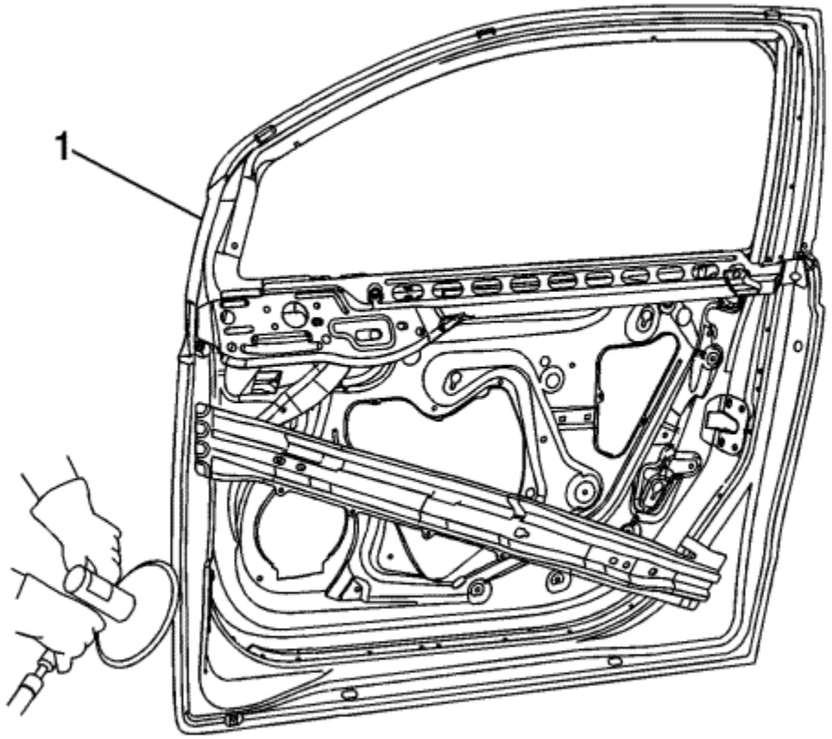

1. Using a grinding disk, grind the surface of the door shell mating flanges (1) to bare steel.

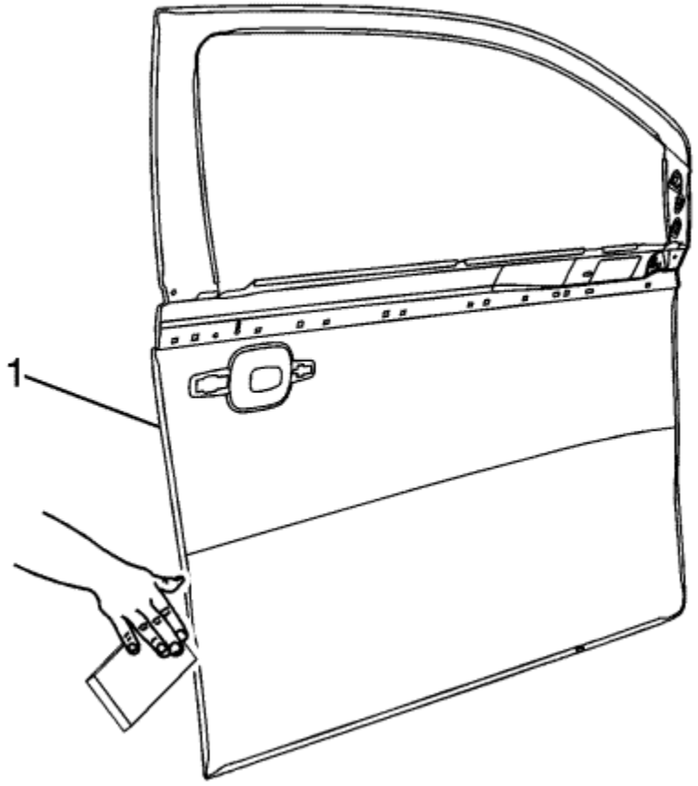

2. Scuff the opposing mating surfaces of the door outer panel to remove the gloss of the E-Coat.
3. Clean the mating surfaces.

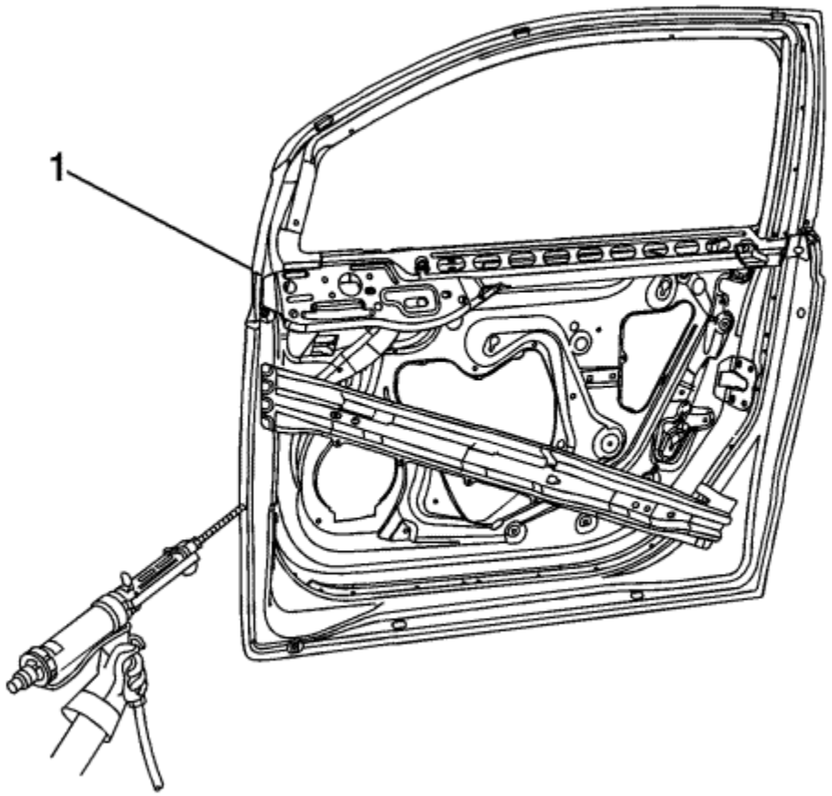

Note : The adhesive has a 40-50 minute working time. Do not allow the door to totally cure off the vehicle, as proper alignment of the door outer panel to the door shell will be difficult.

4. Apply a 3-6 mm (1/8-1/4 in) bead of metal panel bonding adhesive (1) GM P/N 12378566/7 (Canadian P/N 88901674/5) or equivalent, to both of the mating surfaces.
5. Using a small acid brush, spread a coat of adhesive to cover all the bare metal surfaces to ensure corrosion protection.

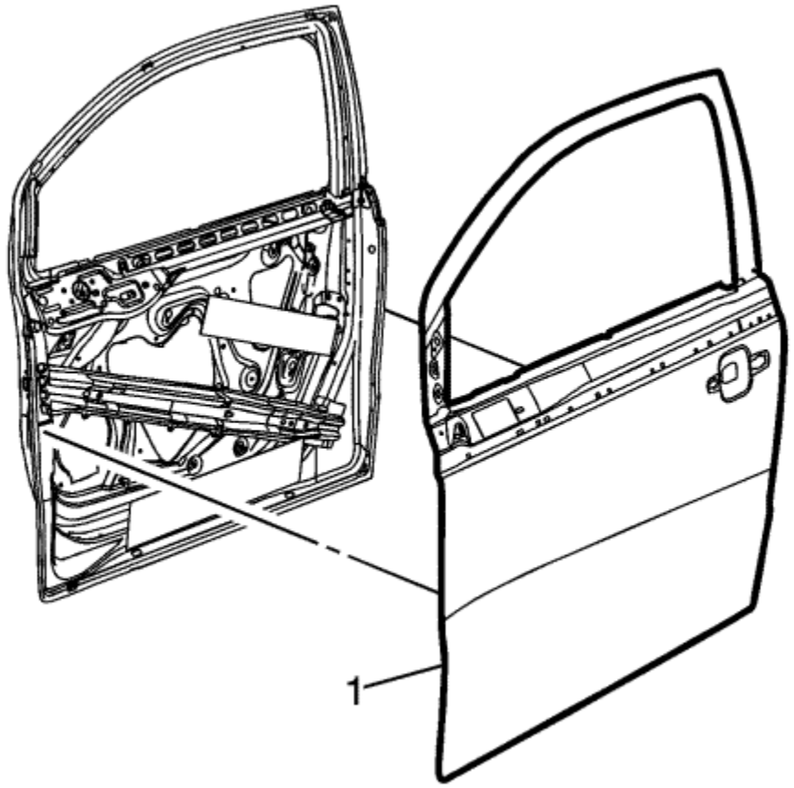

Note : Do NOT pull the panels apart after joined together. If necessary, slide the panels against each other to realign the panels.

6. Install the door outer panel (1) to the door shell.

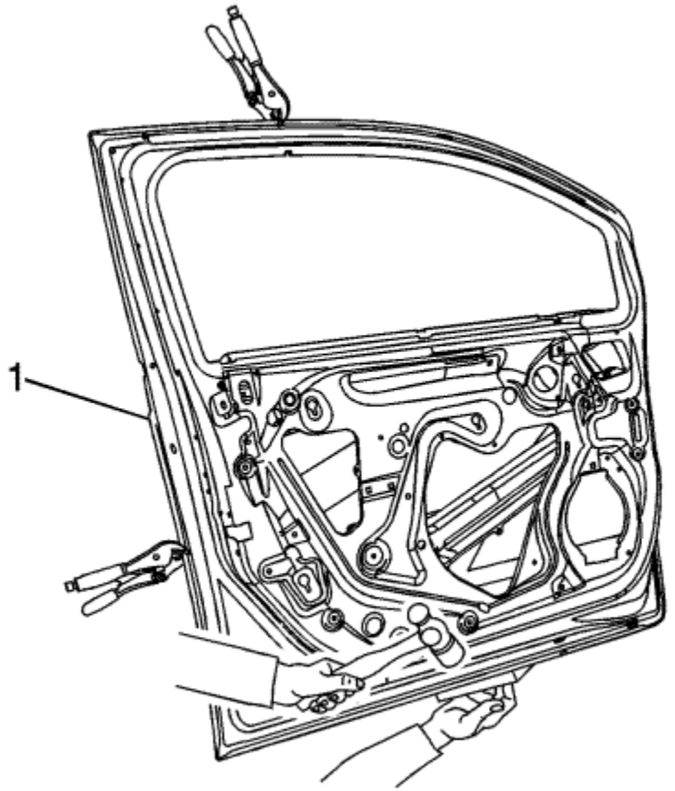

7. Clamp the door outer panel (1) into position, as required.
8. Using a hammer, re-hem the hem flanges around the door shell. Continue to hammer in stages along the hem flanges.
9. Using lacquer thinner remove the excess adhesive from the door panel area.
10. Install the door to the vehicle. Inspect the door outer panel for proper alignment. Adjust the alignment, as required. Refer to Front Side Door Replacement .
11. Clean and prepare all welded surfaces.

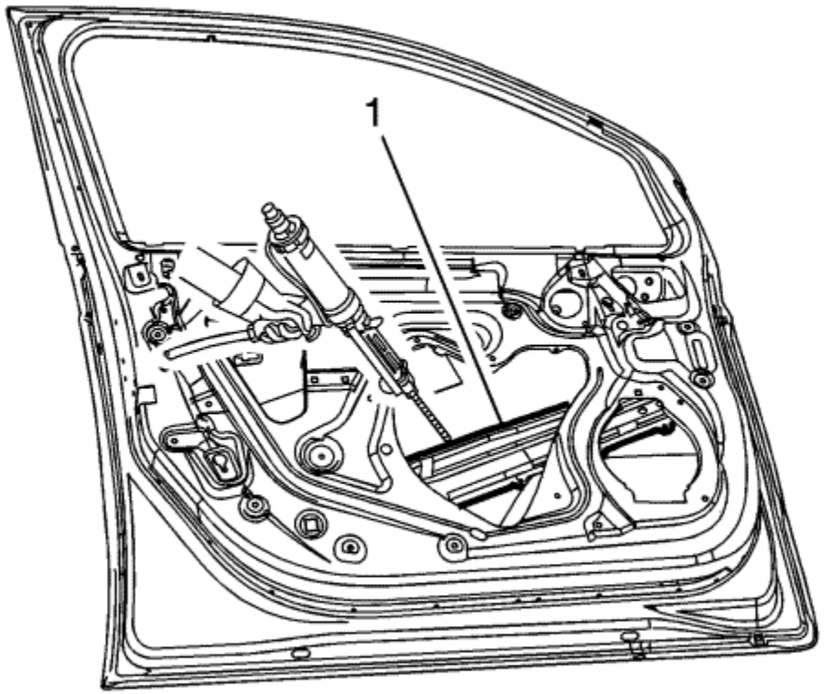

12. Apply Fusor super flexible anti-flutter foam-fast set, or equivalent, in 4-5 evenly spaced locations between the door outer panel and the inner safety beam (1).
13. Apply sealers and anti-corrosion materials to the repair area, as necessary. Refer to Anti-Corrosion Treatment and Repair .
14. Paint the repaired area. Refer to Basecoat/Clearcoat Paint Systems .
15. Install the outer door handle.
16. Install the outside rearview mirror.
17. Install the door to the vehicle. Refer to Front Side Door Replacement .
18. Enable the SIR system. Refer to SIR Disabling and Enabling .
19. If disabled, enable the high voltage system. Refer to High Voltage Enabling .

&#169© Copyright Chevrolet. All rights reserved

Rear Side Door Outer Panel Replacement

Danger: Always perform the High Voltage Disabling procedure prior to servicing any High Voltage component or connection. Personal Protection Equipment (PPE) and proper procedures must be followed.

The High Voltage Disabling procedure will perform the following tasks:

- Identify how to disable high voltage.
- Identify how to test for the presence of high voltage.
- Identify condition under which high voltage is always present and personal protection equipment (PPE) and proper procedures must be followed.

Before working on any high voltage system, be sure to wear the following Personal Protection Equipment:

- Safety glasses with appropriate side shields when within 15 meters (50 feet) of the vehicle, either indoors or outdoors.
- Certified and up-to-date Class "0" Insulation gloves rated at 1000V with leather protectors.
  - Visually and functionally inspect the gloves before use.
  - Wear the Insulation gloves with leather protectors at all times when working with the high voltage battery assembly, whether the system is energised or not.

Failure to follow the procedures exactly as written may result in serious injury or death.

Removal Procedure

Warning : Refer to Approved Equipment for Collision Repair Warning in the Preface section.

Warning : To avoid personal injury when exposed to welding flashes or to galvanized (Zinc Oxide) metal toxic fumes while grinding/cutting on any type of metal or sheet moulded compound, you must work in a properly ventilated area, wearing an approved respirator, eye protection, earplugs, welding gloves, and protective clothing.

Note : Before beginning the repair, refer to Metal Panel Bonding for proper adhesive applicator preparations and general information.

Warning : Refer to SIR Warning in the Preface section.

1. Disable the SIR system. Refer to SIR Disabling and Enabling .
2. Inspect the high voltage system. Refer to High Voltage System Inspection .
3. Remove the door from the vehicle. Refer to Rear Side Door Replacement .
4. Remove the outer door handle.

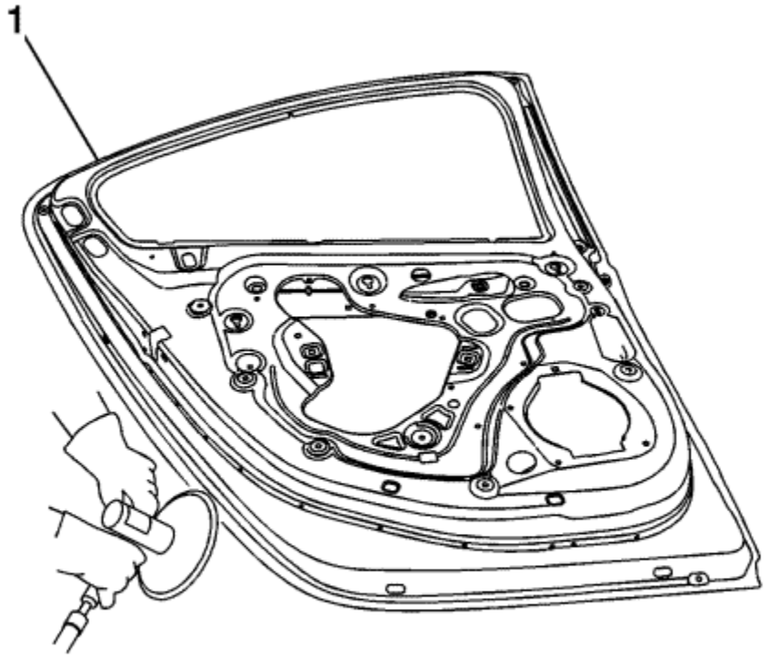

5. Grind the edges of the door outer panel to separate the outer door panel from the door shell.

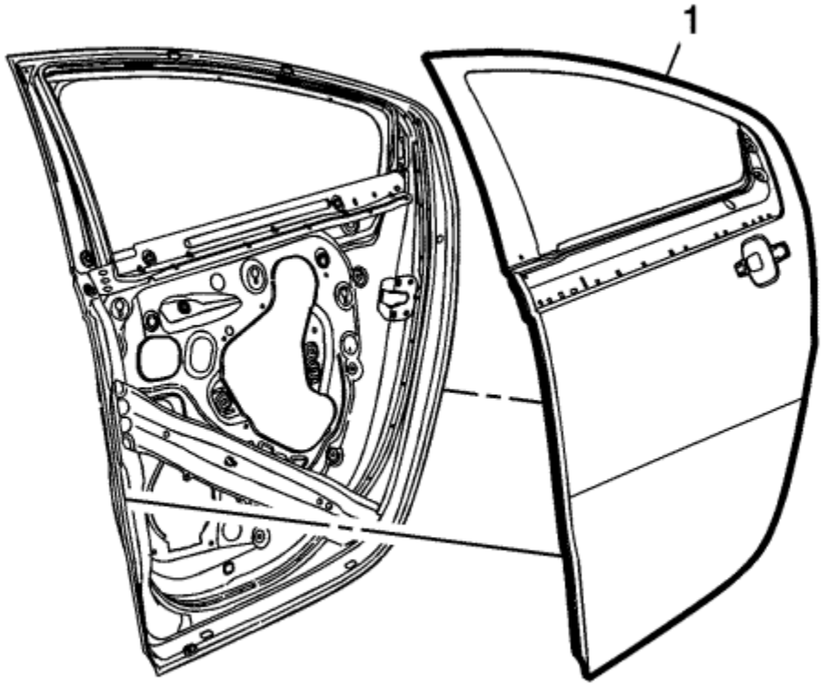

Warning : Inspection of the door guard beam for damage must be performed before replacement of the door outer panel. If damage to the door guard beam is found the door must be replaced. Failure to do so may compromise the structural integrity of the vehicle and may cause personal injury if the vehicle is involved in a collision.

6. Remove the outer door panel (1) from the door shell.
7. Remove the sealers and anti-corrosion materials from the repair area, as necessary. Refer to Anti-Corrosion Treatment and Repair .

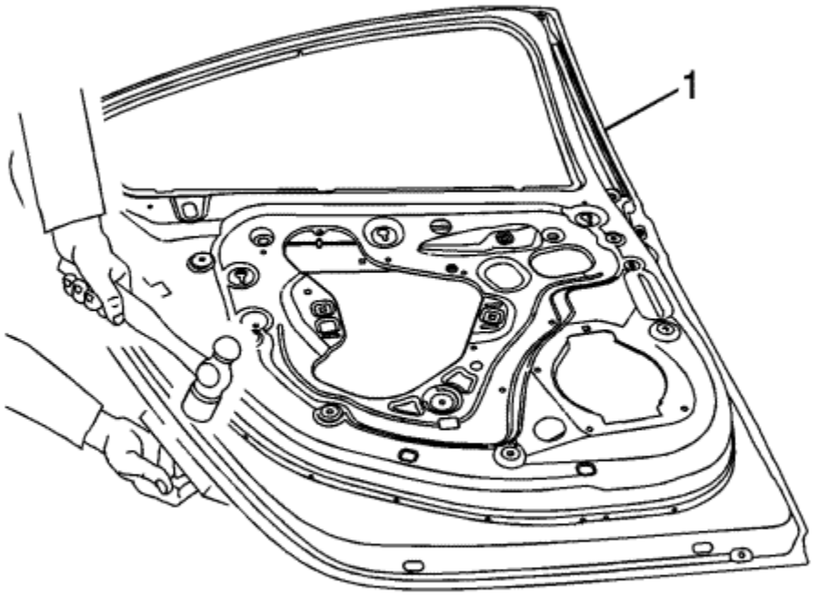

8. Straighten the edges (1) of the door shell.

Installation Procedure

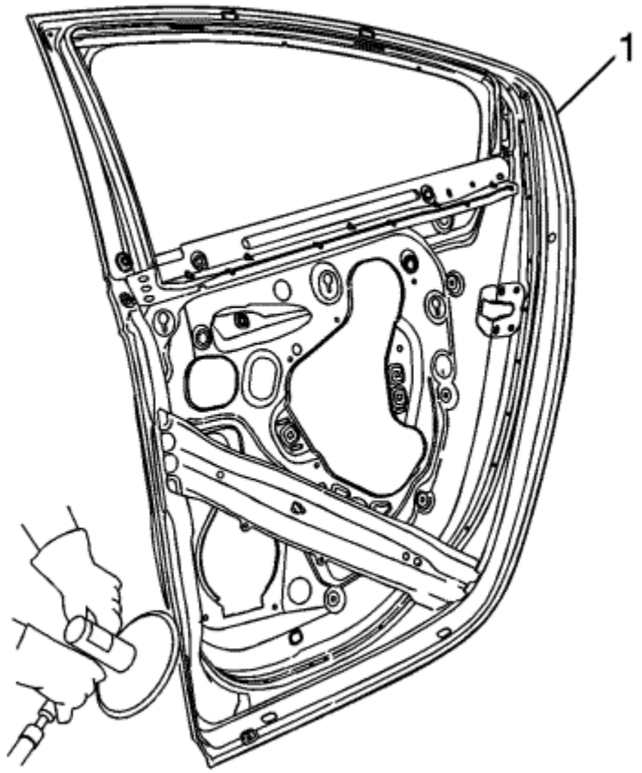

1. Using a grinding disk, grind the surface of the door shell mating flanges (1) to bare steel.

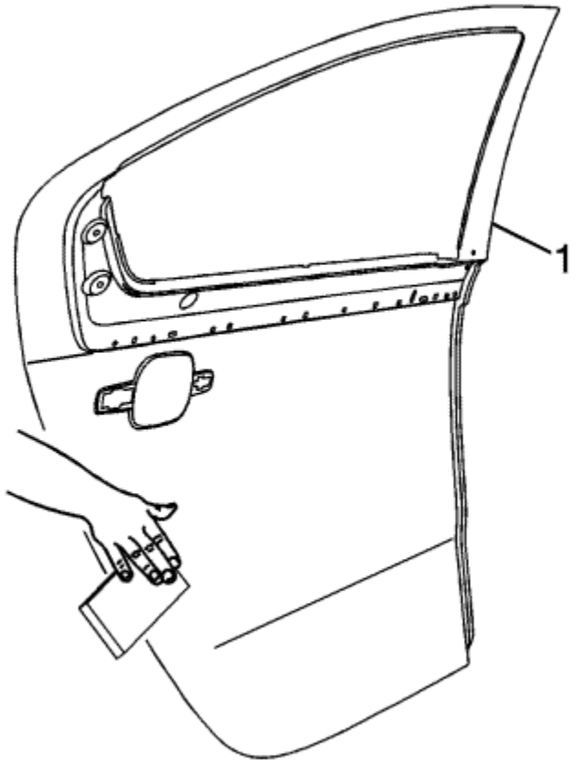

2. Scuff the opposing mating surfaces of the door outer panel (1) to remove the gloss of the E-Coat.
3. Clean the mating surfaces.

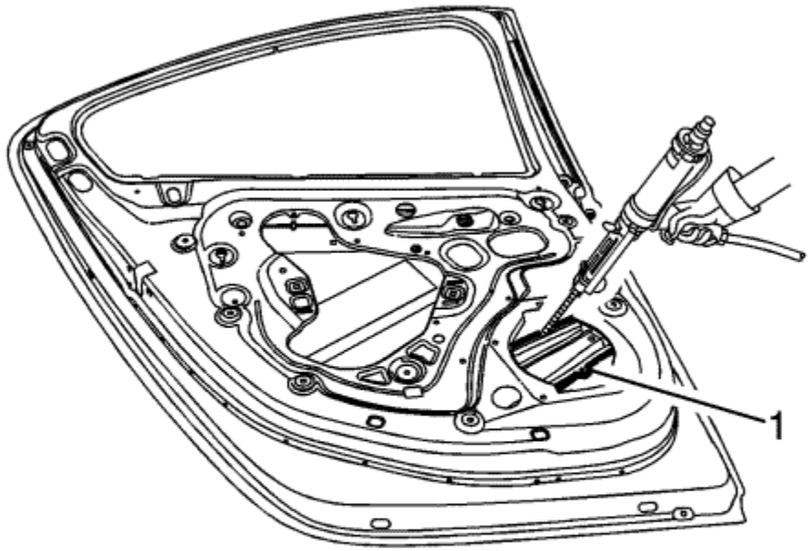

Note : The adhesive has a 40-50 minute working time. Do not allow the door to totally cure off the vehicle, as proper alignment of the door outer panel to the door shell will be difficult.

4. Apply a 3-6 mm (1/8-1/4 in) bead of metal panel bonding adhesive (1) GM P/N 12378566/7 (Canadian P/N 88901674/5) or equivalent, to both of the mating surfaces.
5. Using a small acid brush, spread a coat of adhesive to cover all the bare metal surfaces to ensure corrosion protection.

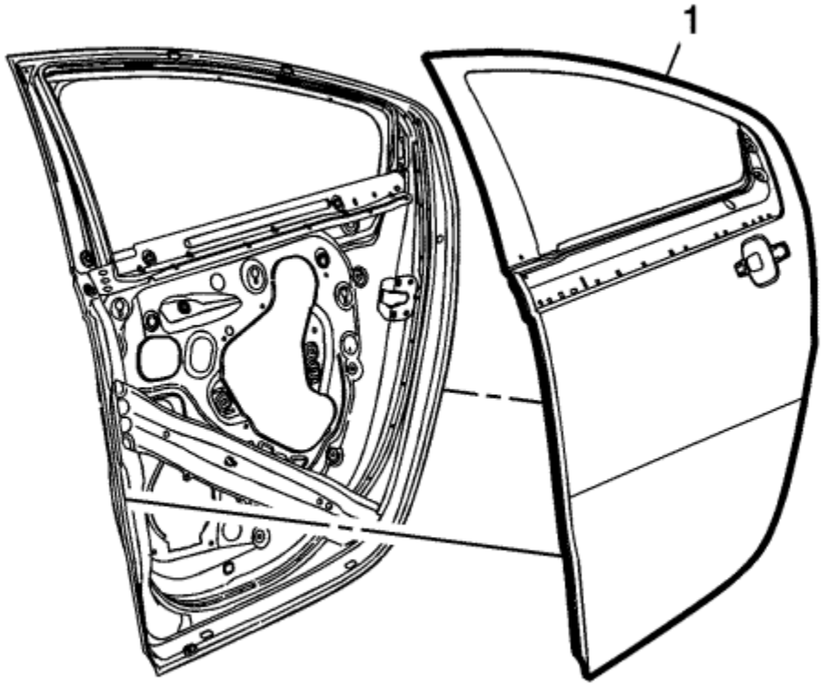

Note : Do NOT pull the panels apart after joined together. If necessary, slide the panels against each other to realign the panels.

6. Install the door outer panel (1) to the door shell.

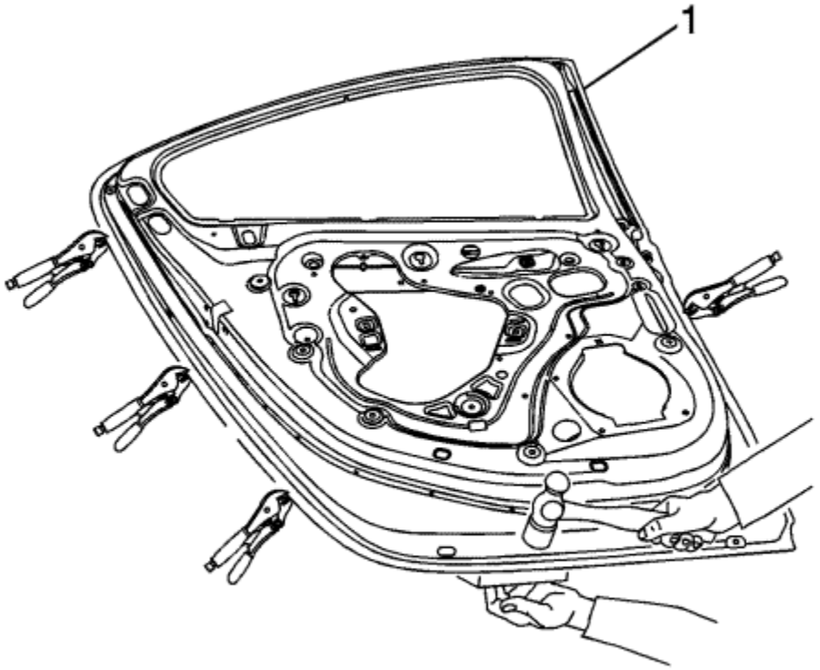

7. Clamp the door outer panel into position, as required.
8. Using a hammer and dolly, re-hem the hem flanges around the door shell. Continue to hammer in stages along the hem flanges.
9. Using lacquer thinner, remove the excess adhesive from the door panel area.
10. Install the door to the vehicle. Inspect the door outer panel for proper alignment. Adjust the alignment, as required.
11. Clean and prepare all welded surfaces.

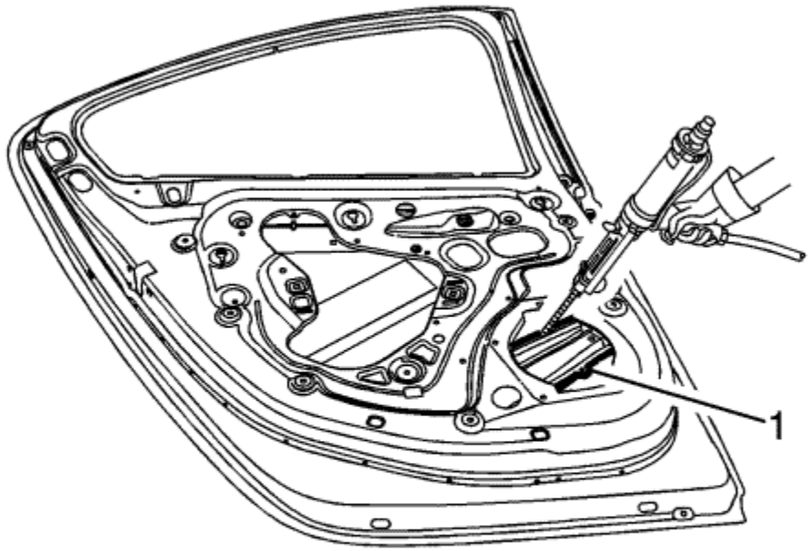

12. Apply Fusor super flexible anti-flutter foam-fast set, or equivalent in 4-5 evenly spaced locations between the door outer panel and the inner safety beam (1).
13. Apply sealers and anti-corrosion materials to the repair area, as necessary. Refer to Anti-Corrosion Treatment and Repair .
14. Paint the repaired area. Refer to Basecoat/Clearcoat Paint Systems .
15. Install the outer door handle.
16. Install the door to the vehicle. Refer to Rear Side Door Replacement .
17. Enable the SIR system. Refer to SIR Disabling and Enabling .
18. If disabled, enable the high voltage system. Refer to High Voltage Enabling .

&#169© Copyright Chevrolet. All rights reserved

Rail Replacement - Rear Section

Danger: Always perform the High Voltage Disabling procedure prior to servicing any High Voltage component or connection. Personal Protection Equipment (PPE) and proper procedures must be followed.

The High Voltage Disabling procedure will perform the following tasks:

- Identify how to disable high voltage.
- Identify how to test for the presence of high voltage.
- Identify condition under which high voltage is always present and personal protection equipment (PPE) and proper procedures must be followed.

Before working on any high voltage system, be sure to wear the following Personal Protection Equipment:

- Safety glasses with appropriate side shields when within 15 meters (50 feet) of the vehicle, either indoors or outdoors.
- Certified and up-to-date Class "0" Insulation gloves rated at 1000V with leather protectors.
  - Visually and functionally inspect the gloves before use.
  - Wear the Insulation gloves with leather protectors at all times when working with the high voltage battery assembly, whether the system is energised or not.

Failure to follow the procedures exactly as written may result in serious injury or death.

Removal Procedure

Warning : Refer to Approved Equipment for Collision Repair Warning in the Preface section.

1. Disable the supplemental inflatable restraint (SIR) System. Refer to SIR Disabling and Enabling .
2. Inspect the high voltage system. Refer to High Voltage System Inspection .
3. Remove all related panels and components.
4. Repair as much of the damage as possible to factory specifications. Refer to Dimensions - Body .
5. Note the location and remove the sealers and anti-corrosion materials from the repair area, as necessary. Refer to Anti-Corrosion Treatment and Repair .

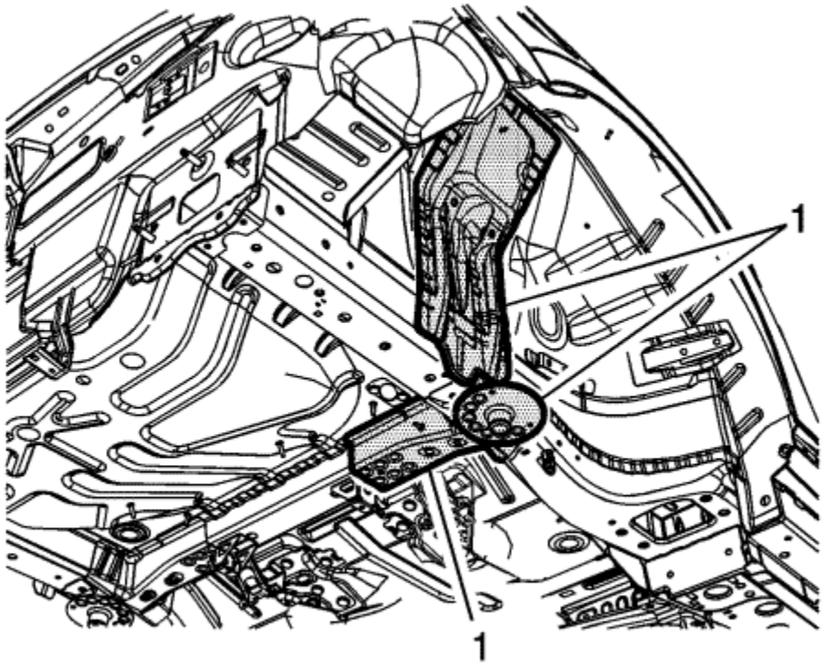

Note : To remove the rear rail-rear section, the rear spring seat, number five bar extension , and the rear suspension support bracket (1) will have to be removed to gain access to the rail spot welds.

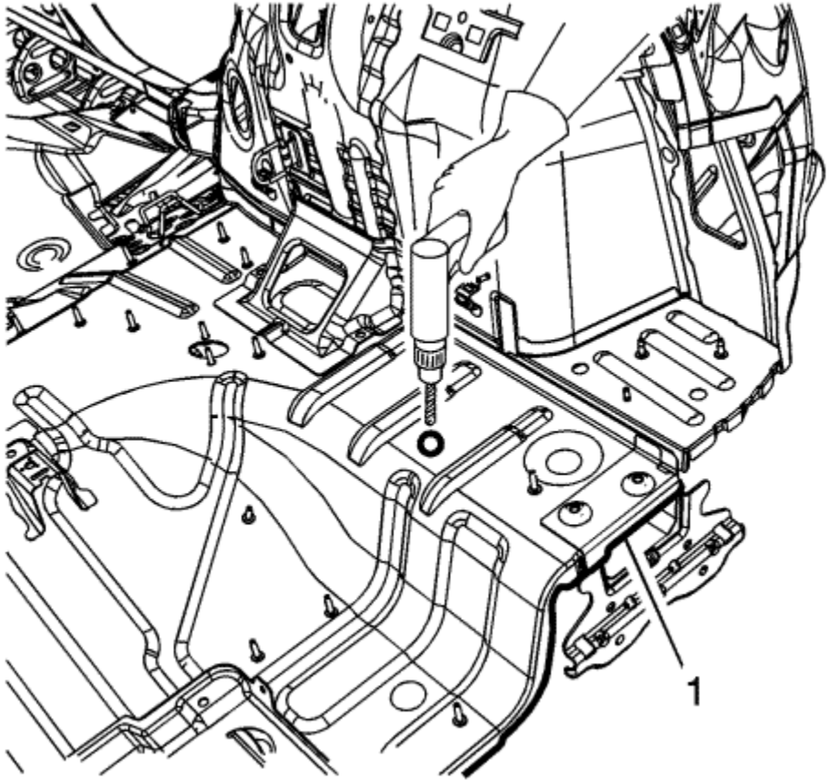

Note : Do not damage any inner panels or reinforcements. In areas where structural adhesive is present, heat the area to facilitate removing the components.

6. Locate and drill out all factory welds (1). Note the number and location of the welds for installation of the rear rail - rear section.

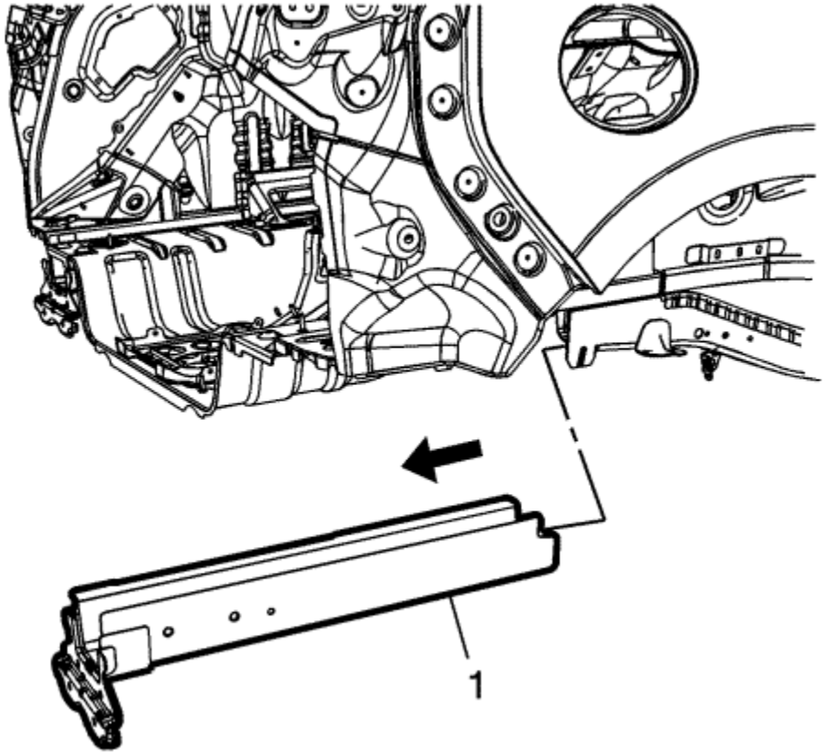

7. Remove the damaged rear rail - rear section (1).

Installation Procedure

Note :

- If the location of the original plug weld holes cannot be determined, space the plug weld holes every 40 mm (1 ½ in) apart.
- Some panels may have structural weld-thru adhesive. It is necessary to replace the weld-thru adhesive with an additional spot weld between each factory spot weld.

1. Prepare all mating surfaces as necessary.
2. Apply GM-approved Weld-Thru Coating or equivalent to all mating surfaces. Refer to Anti-Corrosion Treatment and Repair .

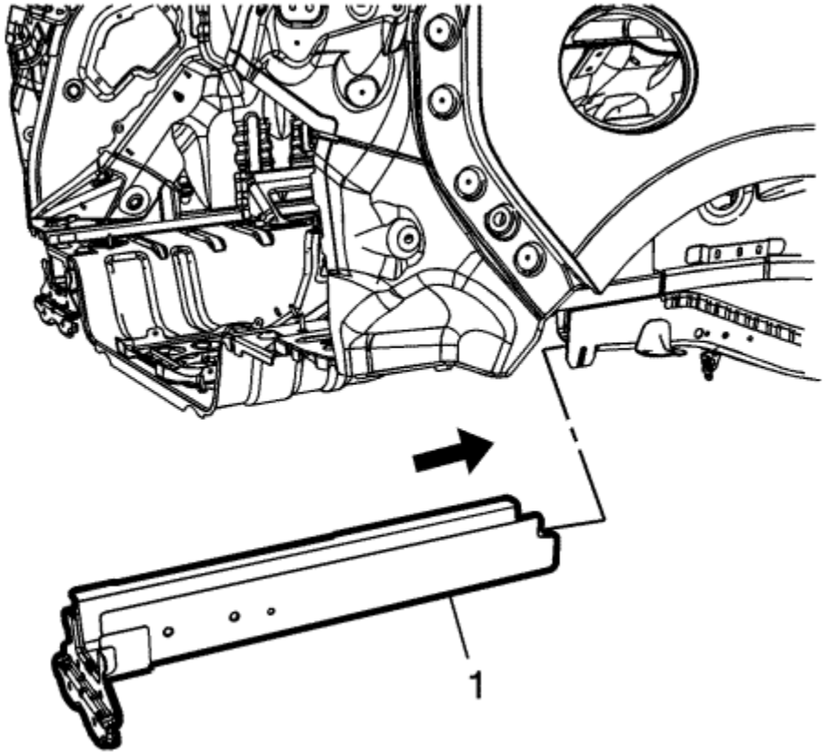

3. Position the rear rail-rear section (1) to the vehicle using 3-dimensional measuring equipment. Clamp the rear rail lower into place.

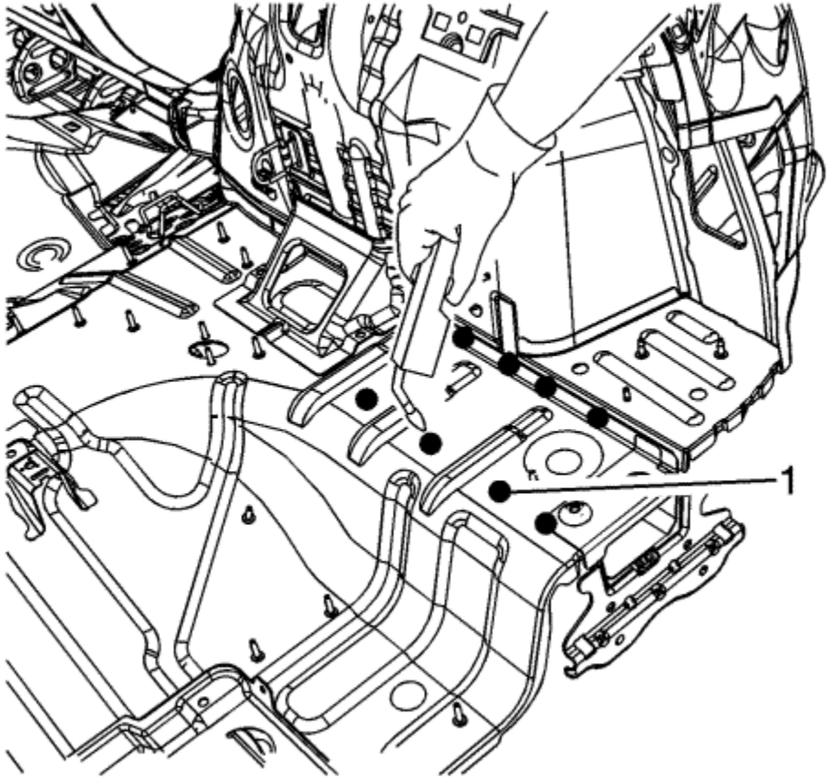

4. Plug weld accordingly (1).
5. Clean and prepare all welded surfaces.
6. Apply the sealers and anti-corrosion materials to the repair area, as necessary. Refer to Anti-Corrosion Treatment and Repair .
7. Paint the repair area. Refer to Basecoat/Clearcoat Paint Systems .
8. Install all related panels and components.
9. If disabled, enable the high voltage system. Refer to High Voltage Enabling .
10. Enable the SIR system. Refer to SIR Disabling and Enabling .

&#169© Copyright Chevrolet. All rights reserved

Rear End Lower Panel Reinforcement Replacement

Removal Procedure

Warning : Refer to Approved Equipment for Collision Repair Warning in the Preface section.

Warning : Refer to Glass and Sheet Metal Handling Warning in the Preface section.

1. Disable the SIR system. Refer to SIR Disabling and Enabling .

   Danger: Always perform the High Voltage Disabling procedure prior to servicing any High Voltage component or connection. Personal Protection Equipment (PPE) and proper procedures must be followed.

   The High Voltage Disabling procedure will perform the following tasks:

   - Identify how to disable high voltage.
   - Identify how to test for the presence of high voltage.
   - Identify condition under which high voltage is always present and personal protection equipment (PPE) and proper procedures must be followed.

   Failure to follow the procedures exactly as written may result in serious injury or death.

2. Disable the high voltage system. Refer to High Voltage Disabling .
3. Remove all related panels and components.
4. Visually inspect the damage. Repair as much of the damage as possible.
5. Remove the sealers and anti-corrosion materials from the repair area as necessary.

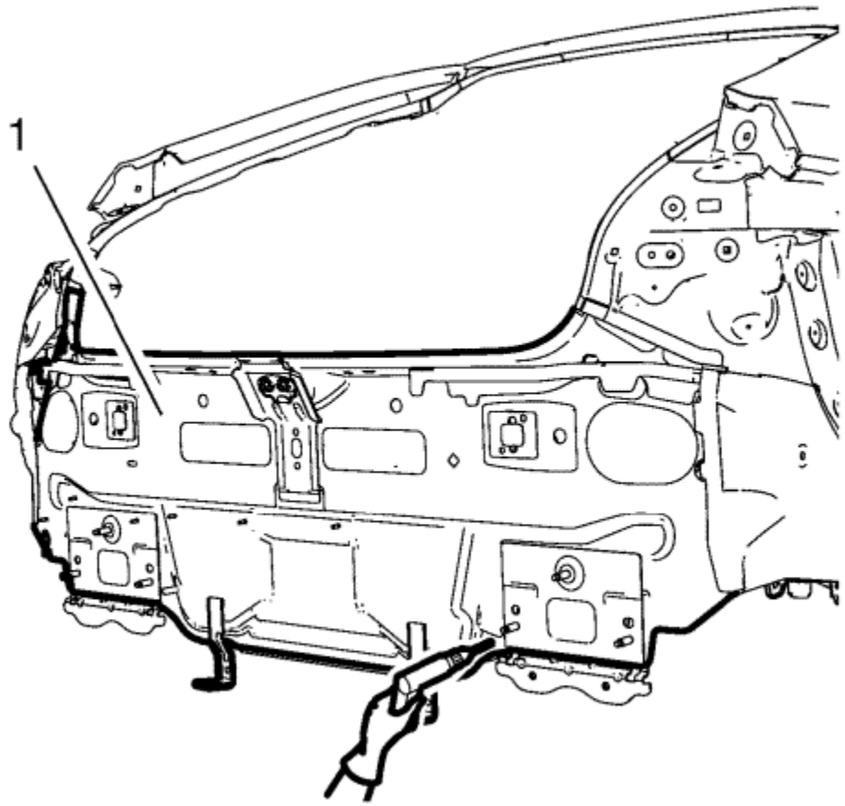

6. Locate and mark all the necessary factory welds of the rear end lower panel reinforcement (1).
7. Drill all factory welds. Note the number and location of welds for installation of the service assembly.

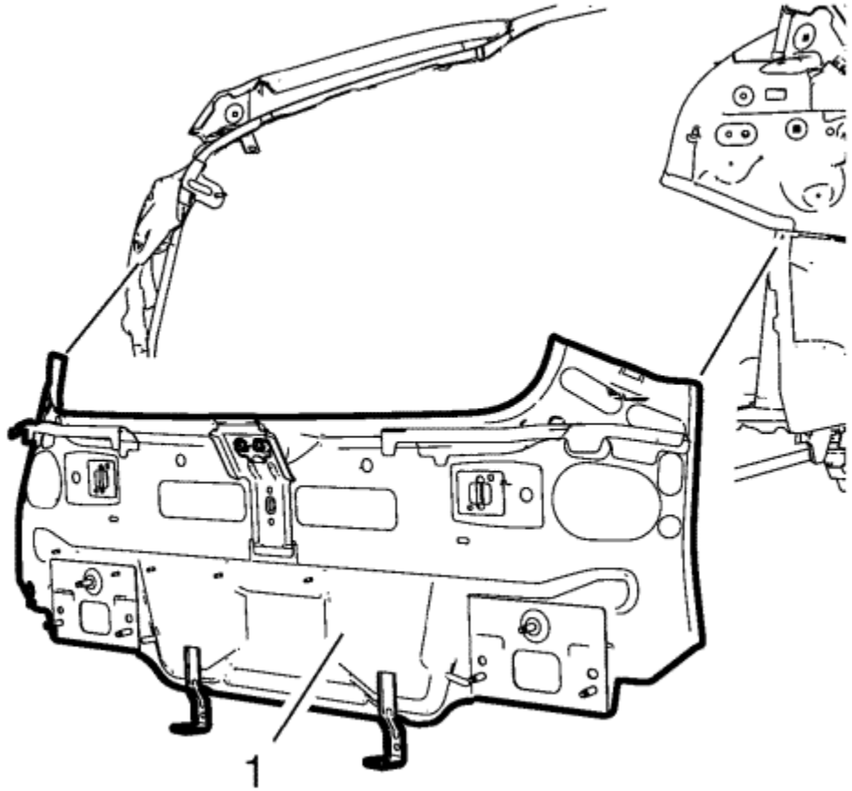

8. Remove the damaged rear end lower panel reinforcement (1).

Installation Procedure

1. Prepare all mating surfaces as necessary.
2. Clean and prepare the attaching surfaces for spot welding and brazing.

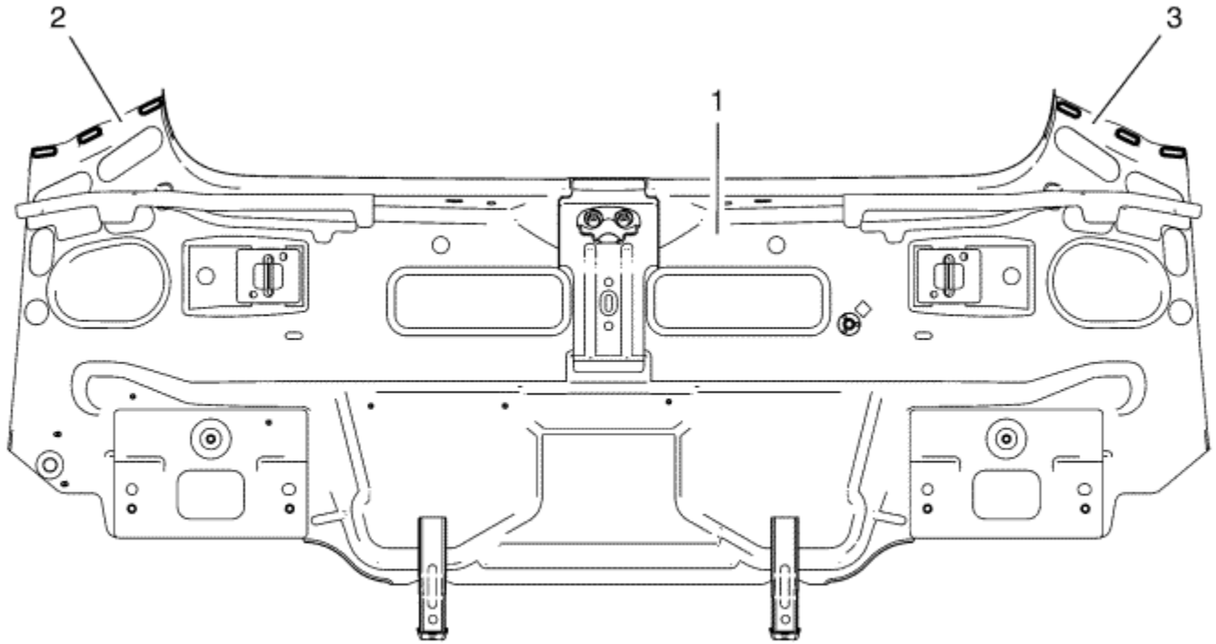

3. Create 3 **5x18 mm** (2, 3) slots for brazing to the rear end lower panel reinforcement (1).

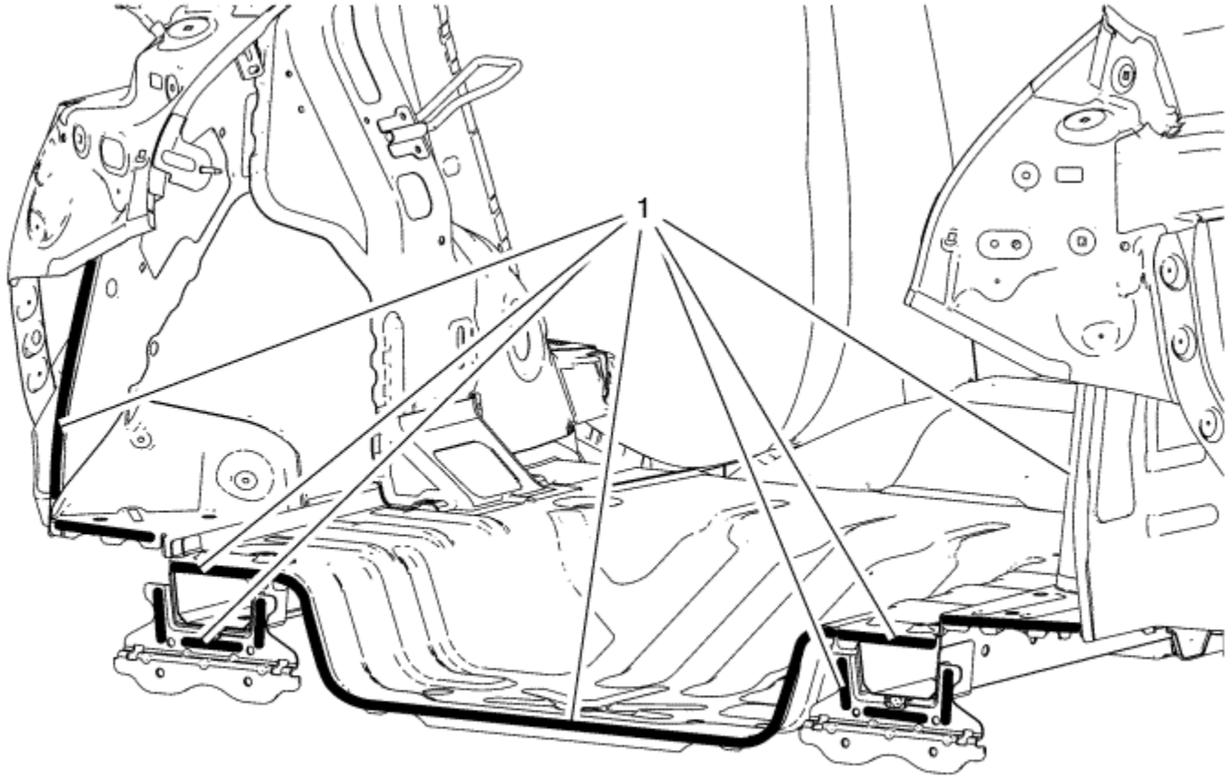

4. Apply structural adhesive to rear end lower panel reinforcement (1).

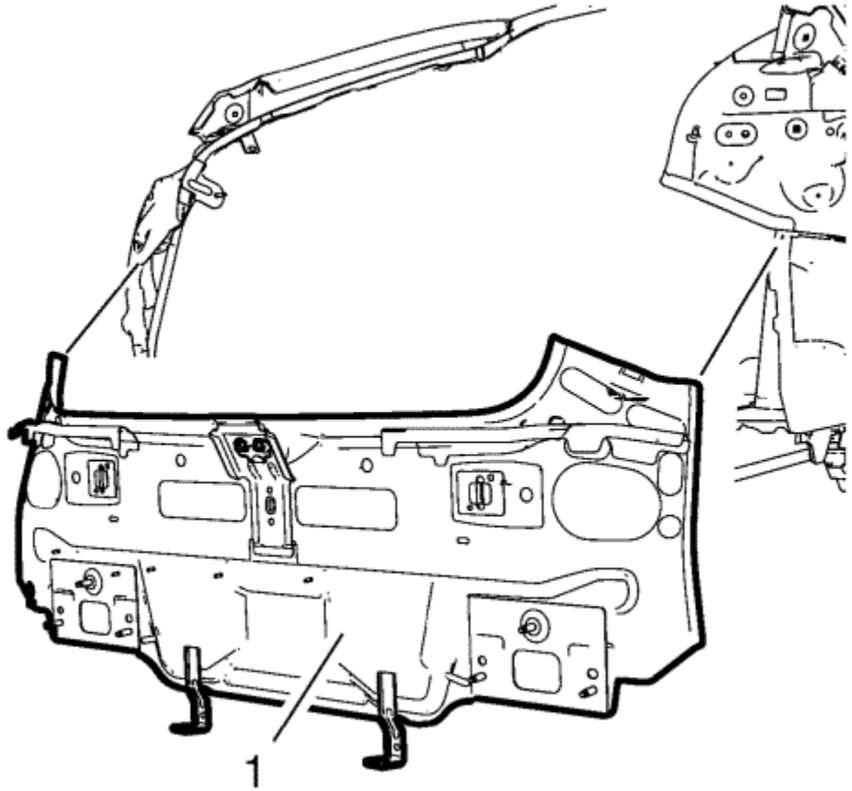

5. Position the rear end lower panel reinforcement (1) on the vehicle.
6. Verify the fit of the rear end lower panel reinforcement.
7. Clamp the rear end lower panel reinforcement into position.

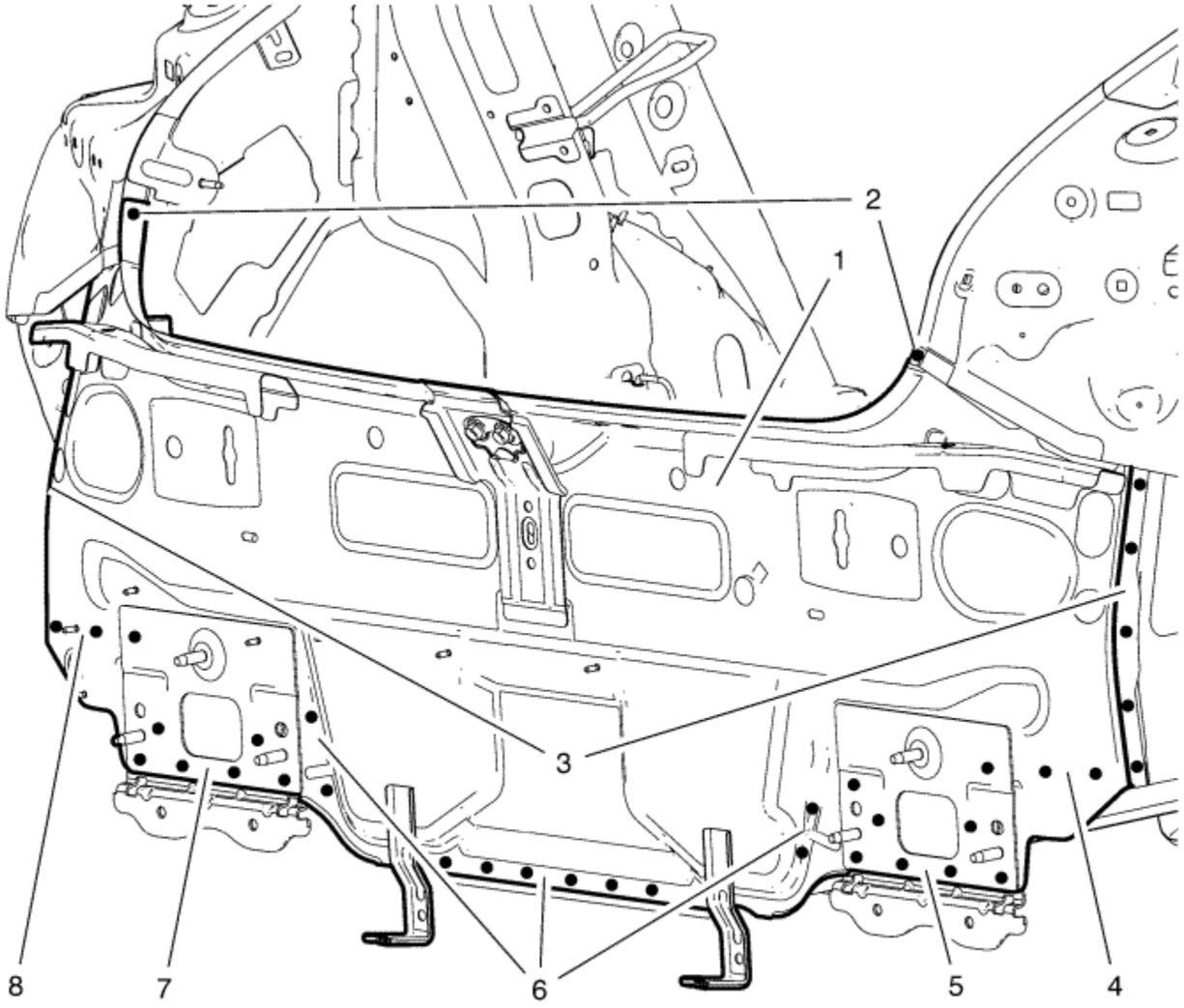

8. Spot weld the rear end lower panel reinforcement (1) accordingly.
   8.1. Upper flanges rear end lower panel reinforcement (2) - 2 spot welds
   8.2. Flanges to body side inner panel (3) - twice 5 spot welds
   8.3. Flange to rear compartment filler (4) - 3 spot welds
   8.4. Rear bumper energy anchor plate to rear rail (5) - 7 spot welds
   8.5. Lower flange rear end lower panel reinforcement (6) - 7 spot welds

8.6. Rear bumper energy anchor plate to rear rail (7) - 7 spot welds
8.7. Flange to rear compartment filler (8) - 3 spot welds

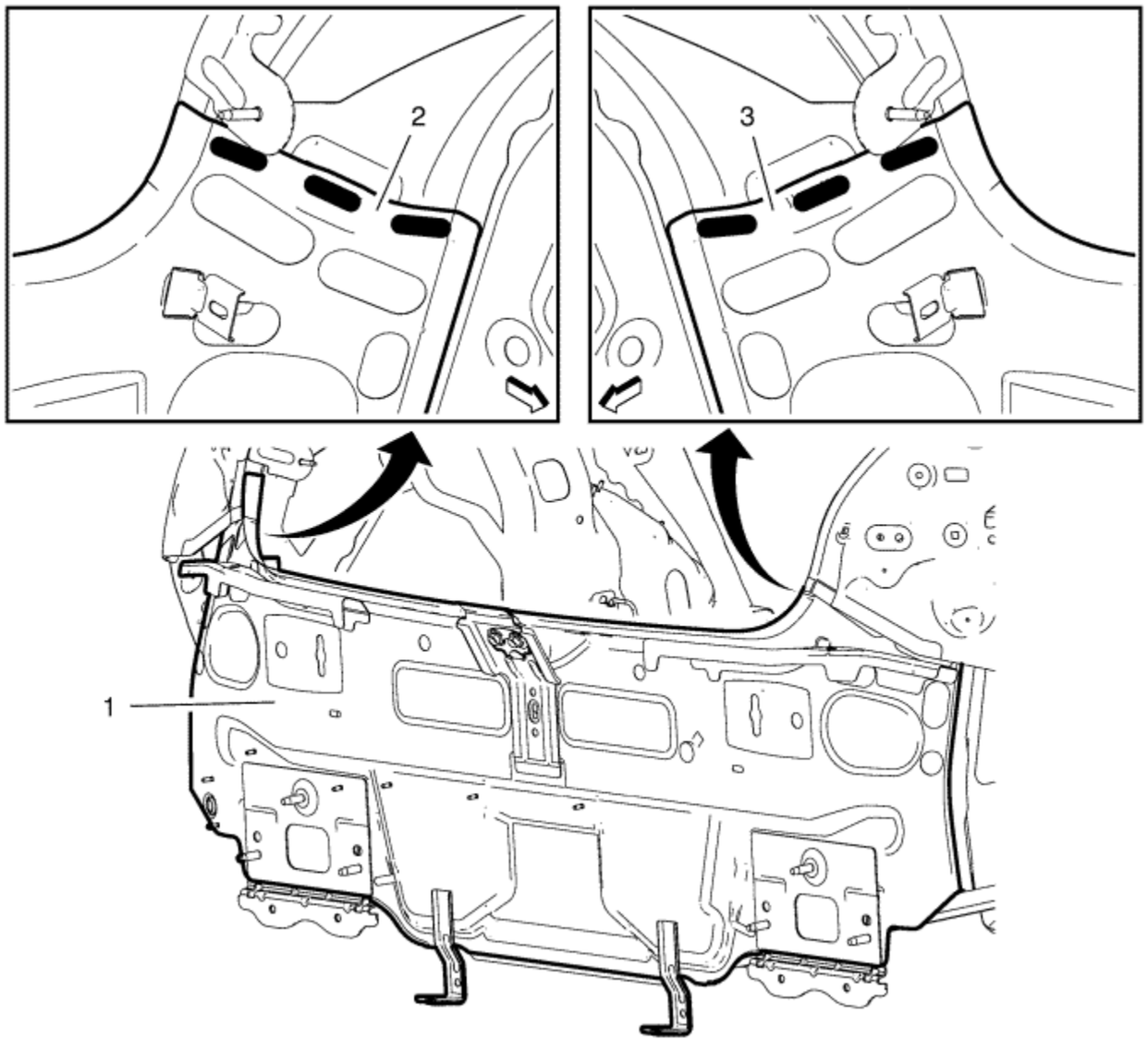

9. Braze the rear end lower panel reinforcement (1) accordingly.
   9.1. Rear end lower panel reinforcement / body side inner panel extension (2) - 3 **5x18 mm**
   9.2. Rear end lower panel reinforcement / body side inner panel extension (3) - 3 **5x18 mm**
10. Apply the sealers and anti-corrosion materials to the repair area as necessary.

11. Paint the repaired area.
12. Install all related panels and components.
13. Enable the high voltage system. Refer to High Voltage Enabling .
14. Enable the SIR system. Refer to SIR Disabling and Enabling .

&#169© Copyright Chevrolet. All rights reserved

Rear End Panel Replacement

Danger: Always perform the High Voltage Disabling procedure prior to servicing any High Voltage component or connection. Personal Protection Equipment (PPE) and proper procedures must be followed.

The High Voltage Disabling procedure will perform the following tasks:

- Identify how to disable high voltage.
- Identify how to test for the presence of high voltage.
- Identify condition under which high voltage is always present and personal protection equipment (PPE) and proper procedures must be followed.

Before working on any high voltage system, be sure to wear the following Personal Protection Equipment:

- Safety glasses with appropriate side shields when within 15 meters (50 feet) of the vehicle, either indoors or outdoors.
- Certified and up-to-date Class "0" Insulation gloves rated at 1000V with leather protectors.
  - Visually and functionally inspect the gloves before use.
  - Wear the Insulation gloves with leather protectors at all times when working with the high voltage battery assembly, whether the system is energised or not.

Failure to follow the procedures exactly as written may result in serious injury or death.

Removal Procedure

Warning : Refer to Approved Equipment for Collision Repair Warning in the Preface section.

Warning : Refer to Glass and Sheet Metal Handling Warning in the Preface section.

1. Disable the SIR system. Refer to SIR Disabling and Enabling .
2. Inspect the high voltage system. Refer to High Voltage System Inspection .
3. Disable the high voltage system. Refer to High Voltage Disabling .
4. Remove all related panels and components.
5. Visually inspect the damage. Repair as much of the damage as possible.
6. Remove the sealers and anti-corrosion materials from the repair area as necessary.

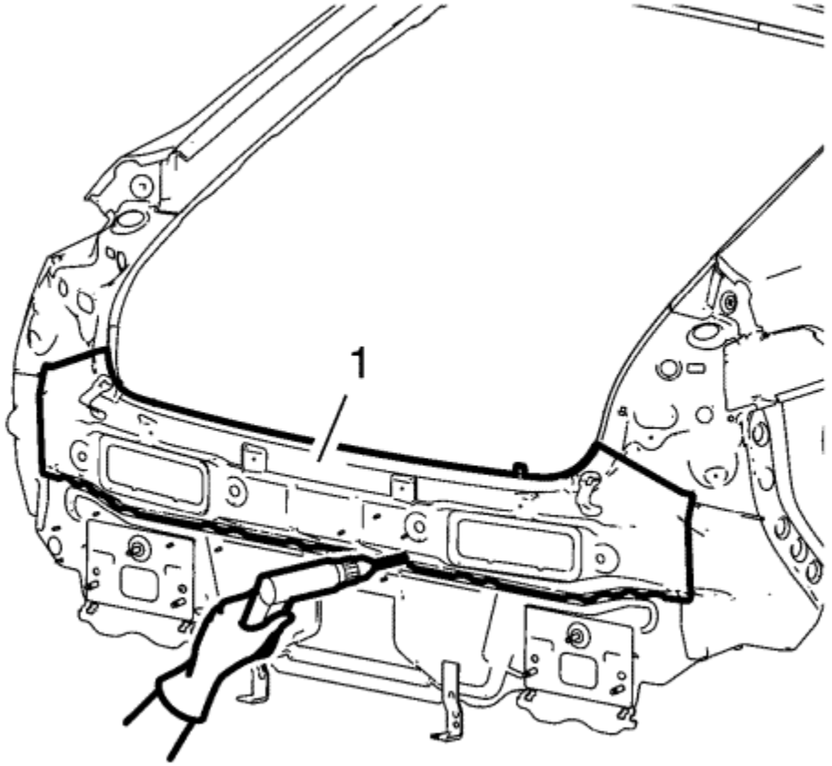

7. Locate and mark all the necessary factory welds of the rear end panel (1).
8. Drill all factory welds. Note the number and location of welds for installation of the service assembly.

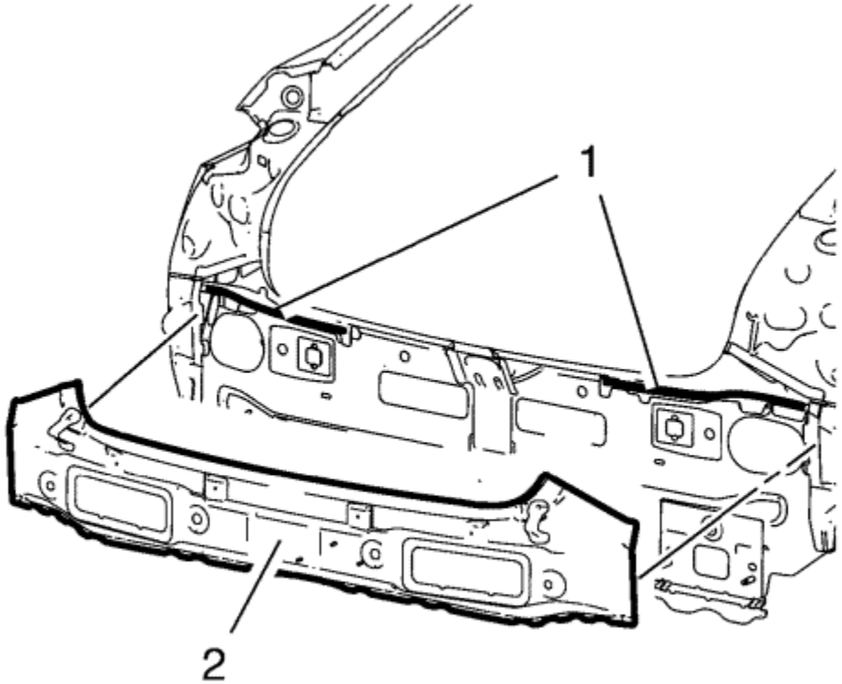

9. To remove the damaged rear end panel (2) cut the adhesive (1) with a suitable tool.

Installation Procedure

1. Prepare all mating surfaces as necessary.
2. Clean and prepare the attaching surfaces for spot welding.

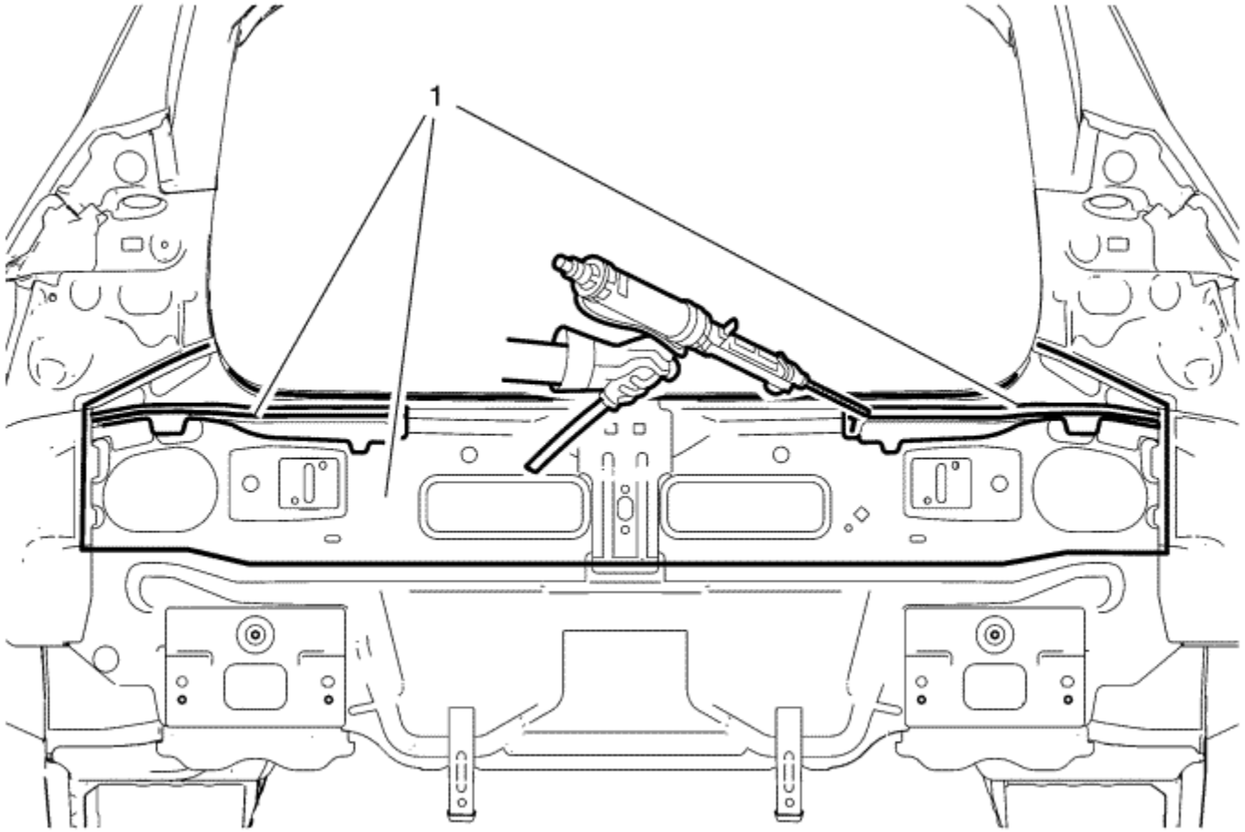

3. Apply structural adhesive to the attaching surfaces (1) of the rear end panel.

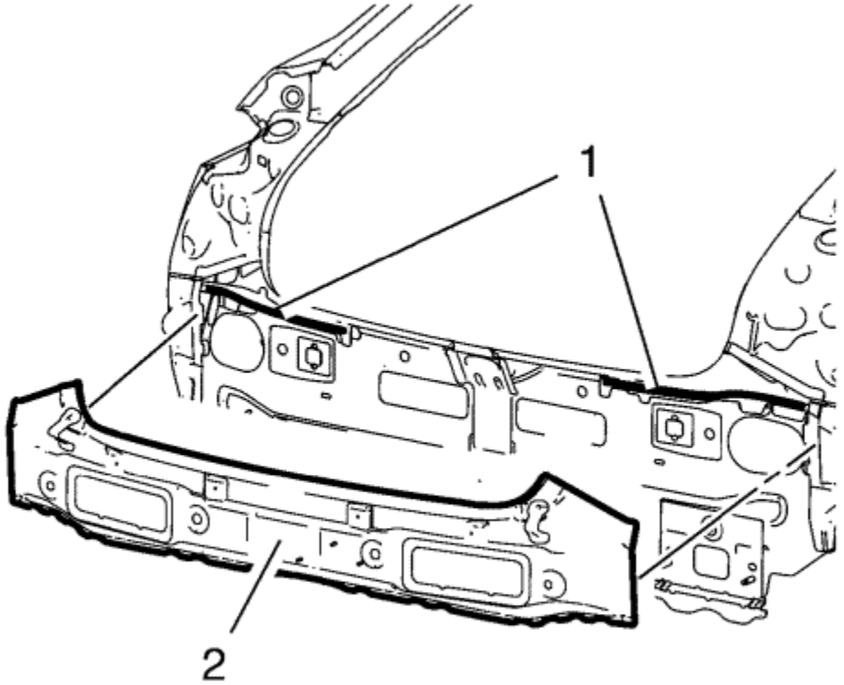

4. Position the rear end panel (1) on the vehicle.
5. Verify the fit of the rear end panel.
6. Clamp the rear end panel into position.

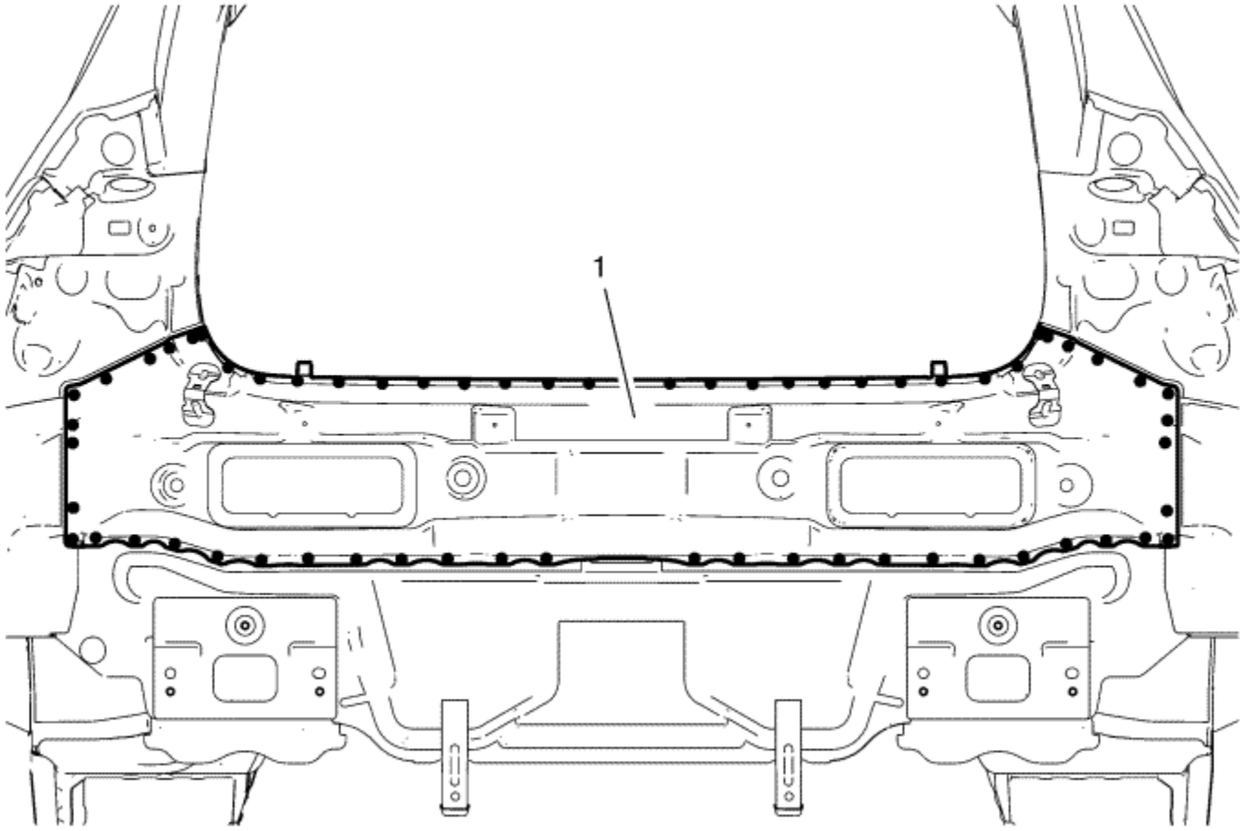

7. Spot weld the rear end panel (1) with 63 spot welds accordingly.
8. Apply the sealers and anti-corrosion materials to the repair area, as necessary.
9. Paint the repaired area.
10. Install all related panels and components.
11. Enable the high voltage system. Refer to High Voltage Enabling .
12. Enable the SIR system. Refer to SIR Disabling and Enabling .

&#169© Copyright Chevrolet. All rights reserved

Resistance Spot Welded Full Panel Replacement

Note : Use this procedure for all panels that are replaced at the factory seams, unless a specific procedure exists in the Collision Repair section of this vehicle's service information.

Removal Procedure

Warning : Refer to Approved Equipment for Collision Repair Warning in the Preface section.

1. Disable the SIR system. Refer to SIR Disabling and Enabling .
2. Disconnect the negative battery cable. Refer to Battery Negative Cable Disconnection and Connection .
3. Remove all related panels and components.
4. Repair as much of the damage as possible to factory specifications.

   Warning : Refer to Foam Sound Deadeners Warning in the Preface section.

5. Note the location and remove the sealers and anti-corrosion materials from the repair area, as necessary. Refer to Anti-Corrosion Treatment and Repair .

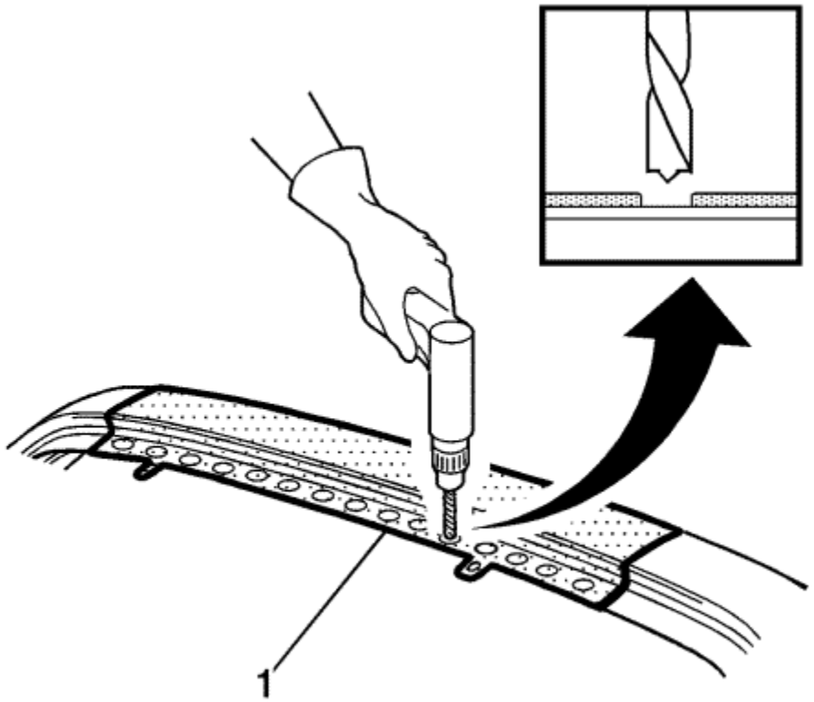

Note : Do not damage any inner panels or reinforcements.

6. Locate and drill out all factory welds (1). Note the number and location of the welds for installation of the service part.

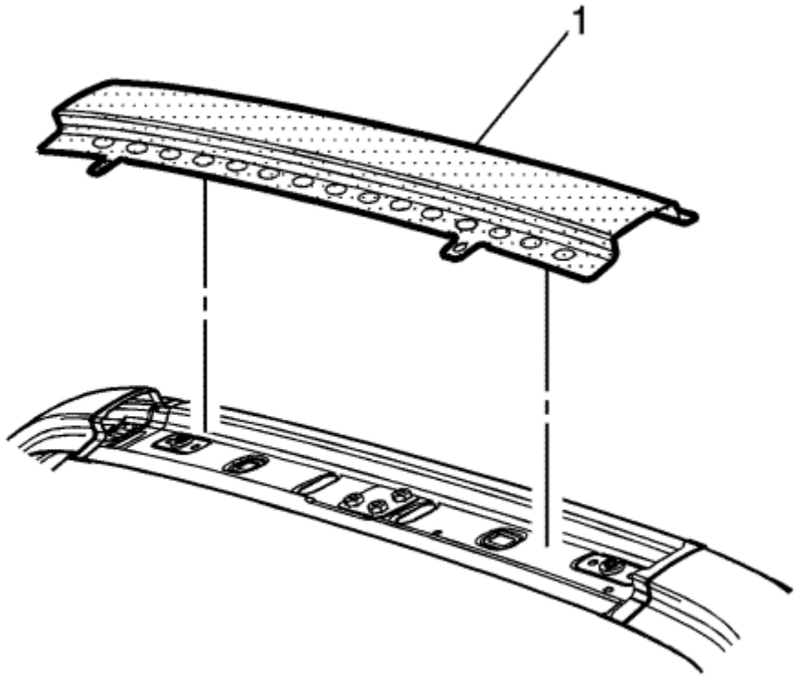

7. Remove the damaged part (1).

Installation Procedure

Note : If the location of the original plug weld holes cannot be determined, space the plug weld holes every 40 mm (1½ in) apart. Where structural adhesive was present, space the plug weld holes every 20 mm (3/4 in) apart.

1. Prepare all mating surfaces as necessary.
2. Apply GM-approved Weld-Thru Coating or equivalent to all mating surfaces. Refer to Anti-Corrosion Treatment and Repair .
3. Position the service part. Clamp in place.

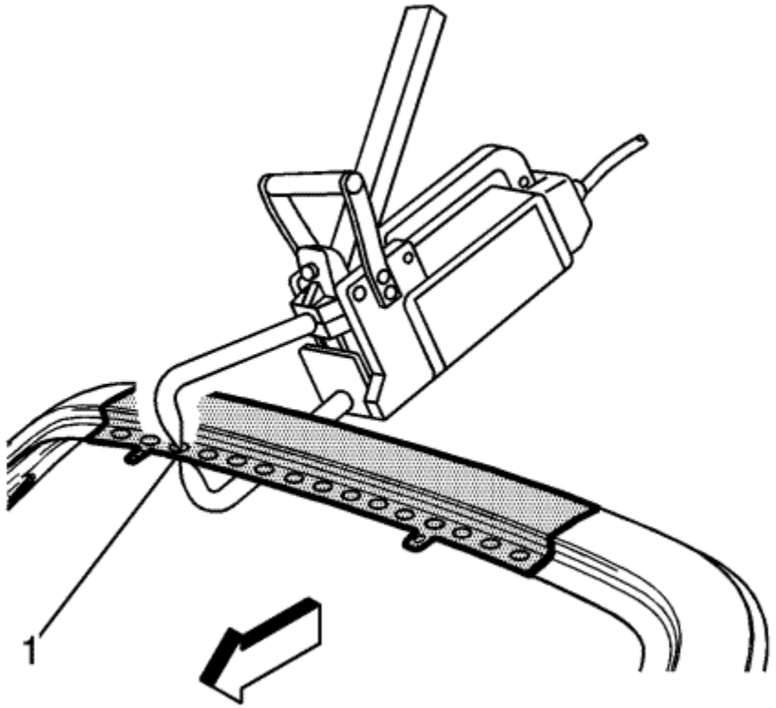

4. Apply welds accordingly (1).
5. Clean and prepare all welded surfaces.
6. Apply the sealers and anti-corrosion materials to the repair area, as necessary. Refer to Anti-Corrosion Treatment and Repair .
7. Paint the repair area. Refer to Basecoat/Clearcoat Paint Systems .
8. Install all related panels and components.
9. Connect the negative battery cable. Refer to Battery Negative Cable Disconnection and Connection .
10. Enable the SIR system. Refer to SIR Disabling and Enabling .

© Copyright Chevrolet. All rights reserved

MIG-Welded Full Panel Replacement

Removal Procedure

Warning : Refer to Approved Equipment for Collision Repair Warning in the Preface section.

Note : Use this procedure for all panels that are replaced at the factory seams, unless a specific procedure exists in the Collision Repair section of this vehicle's service information.

1. Disable the SIR system. Refer to SIR Disabling and Enabling .
2. Disconnect the negative battery cable. Refer to Battery Negative Cable Disconnection and Connection .
3. Remove all related panels and components.
4. Repair as much of the damage as possible to factory specifications.

   Warning : Refer to Foam Sound Deadeners Warning in the Preface section.

5. Note the location and remove the sealers and anti-corrosion materials from the repair area, as necessary. Refer to Anti-Corrosion Treatment and Repair .

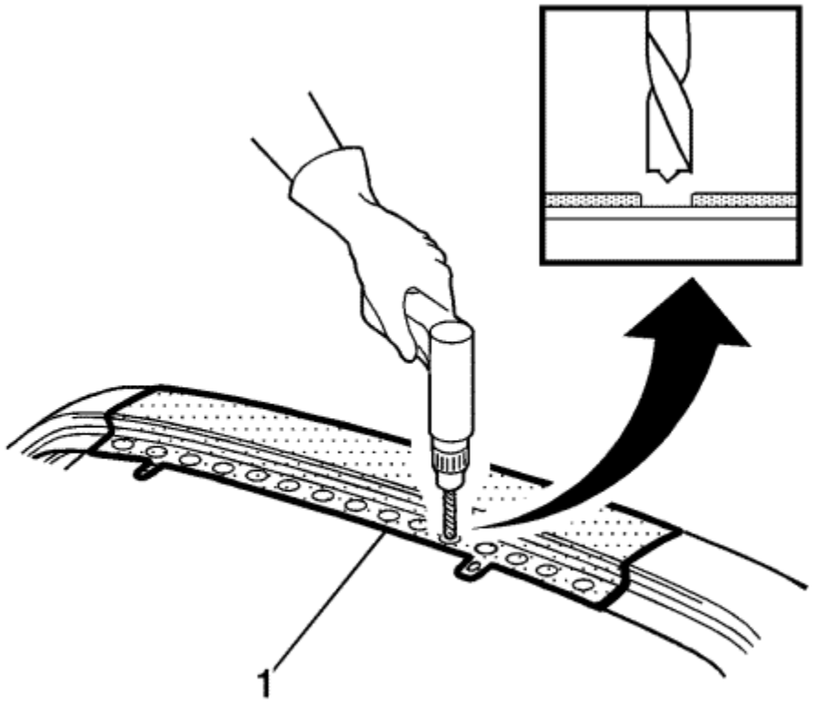

Note : Do not damage any inner panels or reinforcements.

6. Locate and drill out all factory welds (1). Note the number and location of the welds for installation of the service part.

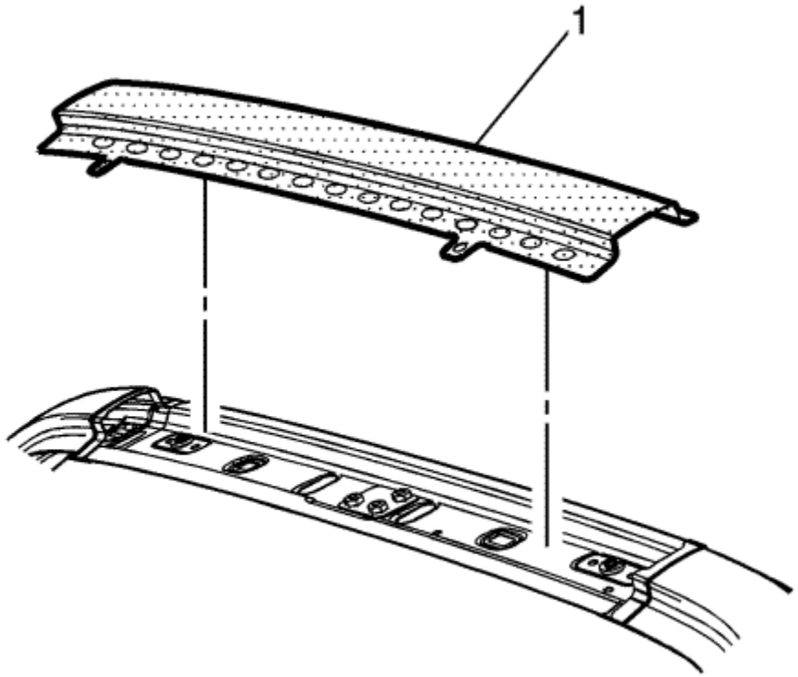

7. Remove the damaged part (1).

Installation Procedure

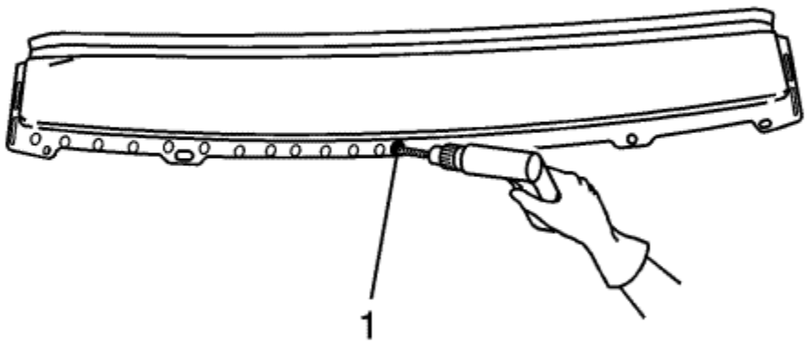

Note : If the location of the original plug weld holes can not be determined, space the plug weld holes every 40 mm (1 1/2 in) apart. Where structural adhesive was present, space the plug weld holes every 20 mm (3/4 in) apart.

1. Drill 8 mm (5/16 in) plug weld holes in the service part as necessary in the locations noted from the original panel (1).
2. Prepare all attachment surfaces as necessary.
3. Prepare all mating surfaces as necessary.
4. Apply GM-approved Weld-Thru Coating or equivalent to all mating surfaces. Refer to Anti-Corrosion Treatment and Repair .
5. Position the service part. Clamp in place.

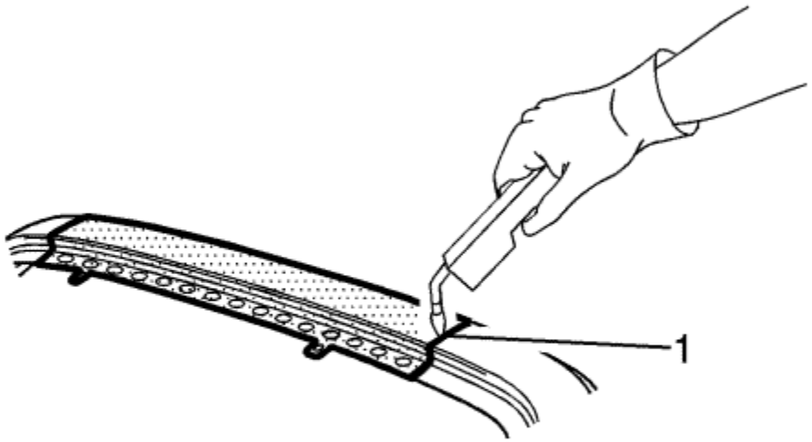

6. Plug weld accordingly (1).
7. Clean and prepare all welded surfaces.
8. Apply the sealers and anti-corrosion materials to the repair area, as necessary. Refer to Anti-Corrosion Treatment and Repair .
9. Paint the repair area. Refer to Basecoat/Clearcoat Paint Systems .
10. Install all related panels and components.
11. Connect the negative battery cable. Refer to Battery Negative Cable Disconnection and Connection .
12. Enable the SIR system. Refer to SIR Disabling and Enabling .

© Copyright Chevrolet. All rights reserved

Dual Phase Steel

This information provides repair recommendations and general guidelines for steel classified as Dual Phase Steel (Dual Phase Steel with a tensile strength up to and including 800 MPa), also known as DP.

General Motors recommends the following when repairing or replacing this type of steel during collision repair.

Note : The use of heat to repair damage is not recommended for this classification of steel.

Recommended Repairs

- Cold repairs can be performed on this type of steel, unless the damage includes kinks. If the damage includes kinks, the part should be replaced.
- Sectioning or partial replacement of this type of steel is recommended only at approved locations, in a specific sectioning procedure.
- This type of steel can be used as a sleeve, or backer plate, when recommended in a specific sectioning procedure.
- Squeeze Resistance Spot Welding can be used to replace factory spot welds, where applicable.
- MIG plug welding and MIG stitch welding can be used on this type of steel.
- MIG Brazing can be used on this type of steel.

&#169© Copyright Chevrolet. All rights reserved

High Strength Low Alloy Steel

This information provides repair recommendations and general guidelines for steel classified as High Strength Low Alloy Steel, also known as HSLA. This type of steel normally has a tensile strength range from 300-700 MPa.

General Motors recommends the following when repairing or replacing this type of steel during collision repair.

Recommended Repairs

- Cold repairs can be performed on this type of steel, unless the damage includes kinks. If the damage includes kinks, the part should be replaced.
- Controlled use of heat can be used to repair damage, if the heat does not exceed 650°C (1200°F). The heat should be applied a maximum of 2 times, for up to 90 seconds.
- Sectioning or partial replacement of this type of steel is recommended only at approved locations, in a specific sectioning procedure.
- This type of steel can be used as a sleeve, or backer plate, during sectioning procedures.
- Squeeze Resistance Spot Welding can be used to replace factory spot welds, where applicable.
- MIG plug welding and MIG stitch welding can be used on this type of steel.
- MIG Brazing can be used on this type of steel.

&#169© Copyright Chevrolet. All rights reserved

Metal Panel Bonding

This is intended to provide general guidelines for adhesive bonding of exterior panels as an alternative to Metal-Inert Gas (MIG) welding. Panel bonding may be seen as an alternative to MIG welding to provide full panel replacement in regards to collision repair procedures. The benefits of panel bonding is:

- No heat or burn damage when additional welding is not required
- Corrosion protection
- Can act as a sealant
- Improved process for complicated shapes (wheelhouse area)

The General Motors specification for metal bonding adhesives is GM 6449G. The scope of this specification is intended to provide the performance guidelines of structural adhesive systems used to repair (metallic) automotive bodies in the aftermarket. These types of adhesives are intended for use when bonding replacement body panels as an option to welding as the attachment means. GM information outlines the use of room temperature cure acrylic adhesives that contain glass bead technology.

Bonding procedures in general are applicable only to a factory seams type approach.

Sectioning or partial panelling of full panels is not supported by General Motors unless specifically documented in a Service Bulletin or Manual.

Applicable components for this technology are EXTERIOR PANELS ONLY, including door skins, tail panels, roof outer panels and quarter panels.

Important: Do not use adhesives for vehicle underbody or upper body structure type repairs such as structural rails, shock/strut towers, floor pans, upper wing rails, body side pillars, door rings--side or rear, rocker panels, unless specifically documented in a GM Service Bulletin or Manual. If in doubt, use only the procedures referenced in the Service Manual for the specific vehicle being repaired.

Always follow the system manufacturer's instructions for application, handling, and curing.

Adhesives currently meeting the performance requirements include General Motors materials and products manufactured by Lord Adhesives. At this time, ONLY the adhesive products listed below meet this guideline:

Manufacturer and Part Number	Description
GM P/N 12378566 (US)	Fast Set Panel Bonding Adhesive
GM P/N 88901674 (Canada)	
Lord Fusor P/N 110B/111B	
GM P/N 12378567 (US)	Medium Set Panel Bonding Adhesive
GM P/N 88901675 (Canada)	

Lord Fusor P/N 108B/109B	
3M P/N 8116	Panel Bonding Adhesive
Ashland Plio Grip Panel 60	Panel Bonding Adhesive

&#169© Copyright Chevrolet. All rights reserved

Mild Steel

This information provides repair recommendations and general guidelines for steel classified as Mild Steel. This type of steel normally has a tensile strength less than 270 MPa. This includes the common steel names of:

- Mild Steel
- Bake Hardenable Steel (BH)
- Solid Solution Strengthened Steel

General Motors recommends the following when repairing or replacing this type of steel during collision repair.

Recommended Repairs:

- Cold repairs can be performed on this type of steel, unless the damage includes kinks. If the damage includes kinks, the part should be replaced.
- Controlled use of heat can be used to repair damage, if the heat does not exceed 650°C (1200°F). The heat should be applied a maximum of 2 times, for up to 90 seconds.
- Sectioning or partial replacement of this type of steel is recommended only at approved locations, in a specific sectioning procedure.
- This type of steel can be used as a sleeve, or backer plate, when recommended in a specific sectioning procedure.
- Squeeze Resistance Spot Welding can be used to replace factory spot welds, where applicable
- MIG plug welding and MIG stitch welding can be used on this type of steel.
- MIG Brazing can be used on this type of steel.

&#169© Copyright Chevrolet. All rights reserved

Ultra High Strength Dual Phase Steel

This information provides repair recommendations and general guidelines for steel classified as Ultra High Strength Dual Phase Steel (Dual Phase Steel with a tensile strength greater than 800 MPa), also known as DPX.

General Motors recommends the following when repairing or replacing this type of steel during collision repair.

Note :

- Repair of this type of steel is not recommended.
- This type of steel should be replaced at factory joints only. Sectioning or partial replacement is not recommended.
- The use of heat to repair damage is not recommended for this type of steel.
- Stitch Welding is not recommended for this type of steel.
- This classification of steel can not be used as a backing reinforcement or a sleeve for a sectioning joint, unless a specific procedure is available.

Recommended Repairs:

- Squeeze Resistance Spot Welding can be used to replace factory spot welds, where applicable.
- MIG plug welding can be used to replace factory spot welds.
- MIG Brazing can be used to replace factory spot welds.

&#169© Copyright Chevrolet. All rights reserved

Ultra High Strength Steel

This information provides repair recommendations and general guidelines for steel classified as Ultra High Strength Steel, also know as UHSS. This type of steel normally has a tensile strength greater than 700 MPa.

This includes the common steel names of

- Ultra High Strength Steel (UHSS)
- Martensitic Steel (MS)
- Press Hardened Steel (PHS)
- Boron Steel

General Motors recommends the following when repairing or replacing this type of steel during collision repair.

Note :

- Repair of this type of steel is not recommended.
- This type of steel should only be replaced at factory joints. Sectioning or partial replacement is not recommended.
- The use of heat to repair damage is not recommended for this type of steel.
- Stitch Welding is not recommended for this type of steel.
- This type of steel cannot be used as a backing reinforcement or a sleeve for a sectioning joint.

Recommended Repairs

- Squeeze Resistance Spot Welding can be used to replace factory spot welds, where applicable.
- MIG plug welding can be used to replace factory spot welds.
- MIG Brazing can be used to replace factory spot welds.

&#169© Copyright Chevrolet. All rights reserved

Fastener Tightening Specifications

Application	Specification	
	Metric	English
Drivetrain and Front Suspension Frame Bolt Front	160 N·m	118 lb ft
Drivetrain and Front Suspension Frame Bolt Rear	160 N·m	118 lb ft
Frame Reinforcement Bolts	58 N·m	43 lb ft
Front Stabiliser Shaft Link Nuts	65 N·m	48 lb ft
Power Steering Wiring Harness Bracket Bolt	9 N·m	80 lb in
Radiator Support Bracket Bolts	22 N·m	16 lb ft
Rear Transmission Mount Through Bolt	100 N·m	74 lb ft
Underbody Air Deflector Bolts	2.5 N·m	22 lb in
Underbody Front Air Deflector Bolt - Left or Right	2.5 N·m	22 lb in
Underbody Front Air Deflector Nut - Left or Right	9 N·m	80 lb in
Wheelhouse Panel Liner Nuts - Rear	2 N·m	18 lb in
Wheelhouse Panel Liner Screws - Front and Rear	3 N·m	27 lb in

© Copyright Chevrolet. All rights reserved

Underbody Front Air Deflector Replacement - Left Side

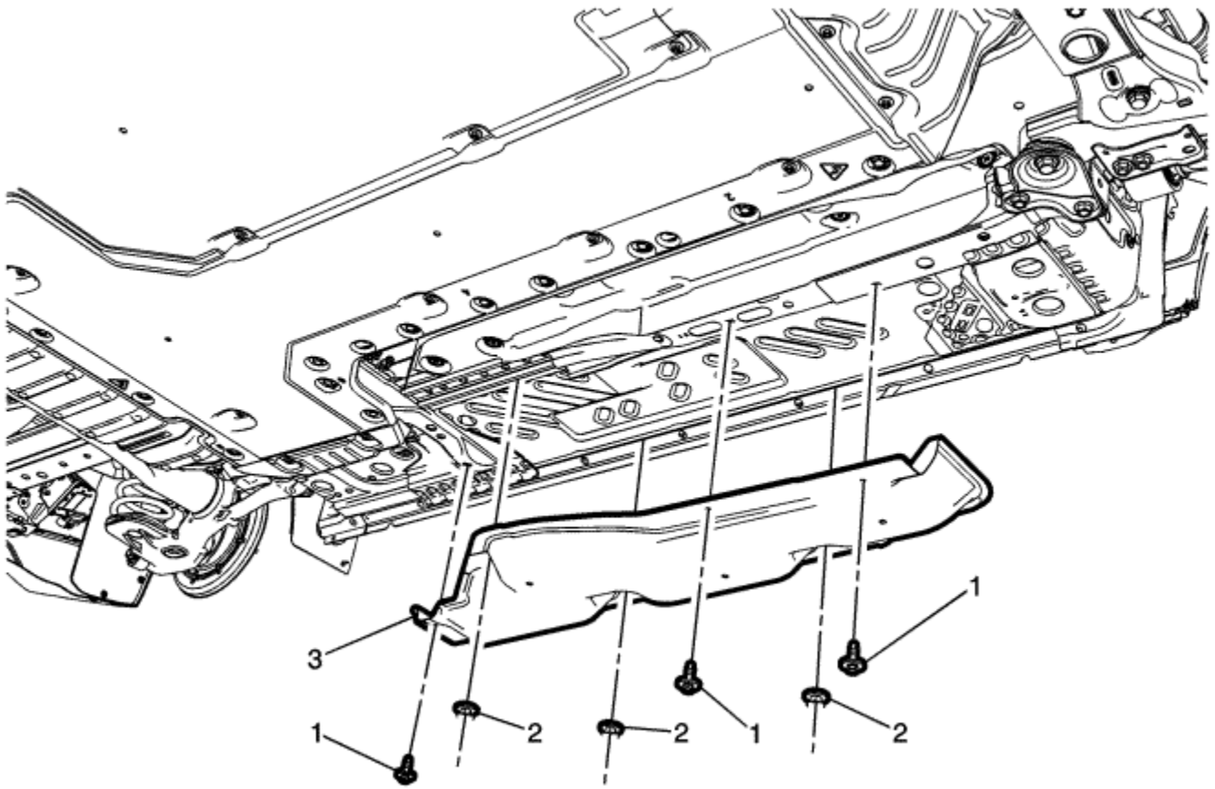

Callout	Component Name
Danger: Do not use a service jack in locations other than those specified to lift this vehicle. Lifting the vehicle with a jack in those other locations could cause the vehicle to slip off the jack and roll; this could cause injury or death. **Preliminary Procedure**	

Raise and support the vehicle. Refer to Lifting and Jacking the Vehicle	
1	Underbody Front Air Deflector Bolt (Qty 2) **Caution :** Refer to Fastener Caution in the Preface section. **Tighten** 2.5 N·m (22 lb in)
2	Underbody Front Air Deflector Nut (Qty 4) **Tighten** 9 N·m (80 lb in)
3	Underbody Front Air Deflector

© Copyright Chevrolet. All rights reserved

Underbody Front Air Deflector Replacement - Right Side

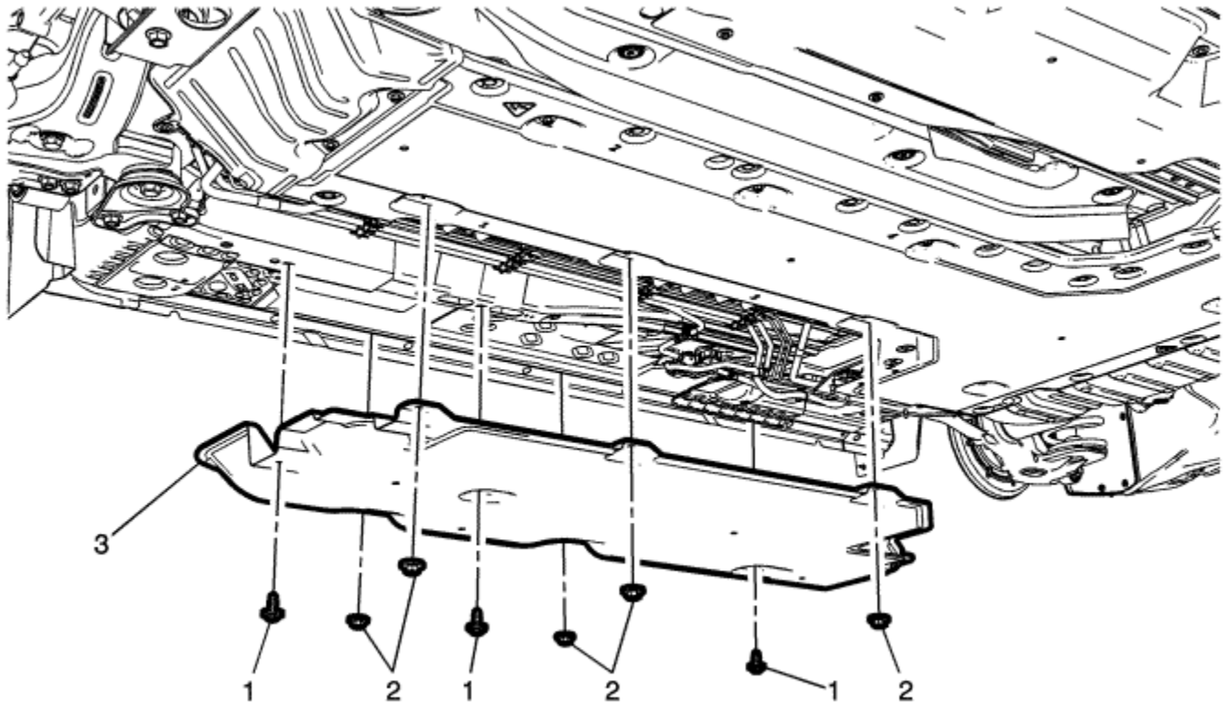

Callout	Component Name
Danger: Do not use a service jack in locations other than those specified to lift this vehicle. Lifting the vehicle with a jack in those other locations could cause the vehicle to slip off the jack and roll; this could cause injury or death. **Preliminary Procedure**	

Remove the exhaust pipe heat shield front. Refer to Exhaust Pipe Heat Shield Replacement : Rear → Centre → Front	
1	Underbody Front Air Deflector Bolt (Qty 3) **Caution :** Refer to Fastener Caution in the Preface section. **Tighten** 2.5 N·m (22 lb in)
2	Underbody Front Air Deflector Nut (Qty 5) **Tighten** 9 N·m (80 lb in)
3	Underbody Front Air Deflector

© Copyright Chevrolet. All rights reserved

Underbody Rear Air Deflector Replacement

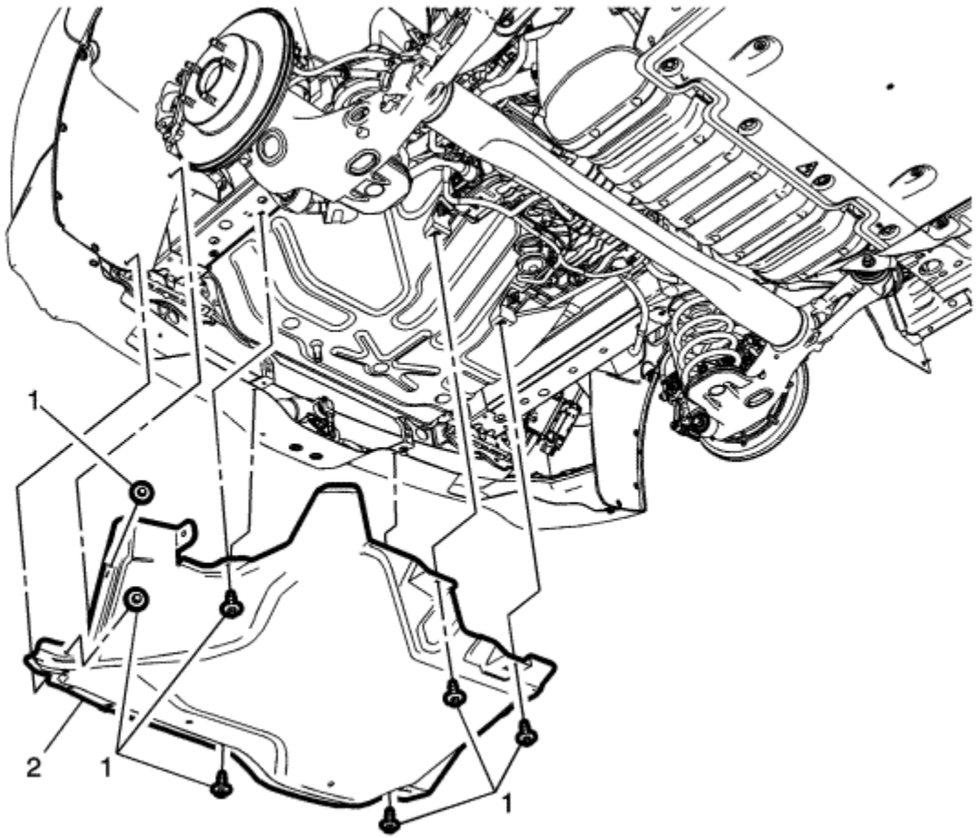

Callout	Component Name
Danger: Do not use a service jack in locations other than those specified to lift this vehicle. Lifting the vehicle with a jack in those other locations could cause the vehicle to slip off the jack and roll; this could cause injury or death. **Preliminary Procedure**	

Raise and support the vehicle. Refer to Lifting and Jacking the Vehicle	
1	Underbody Rear Air Deflector Bolt (Qty 9) **Caution :** Refer to Fastener Caution in the Preface section. **Tighten** 2.5 N·m (22 lb in)
2	Underbody Rear Air Deflector

© Copyright Chevrolet. All rights reserved

Drivetrain and Front Suspension Frame Replacement

Removal Procedure

1. Disable the high voltage system. Refer to High Voltage Disabling .

   Caution: With wheels of the vehicle facing straight ahead, secure the steering wheel utilizing steering column anti-rotation pin, steering column lock, or a strap to prevent rotation. Locking of the steering column will prevent damage and a possible malfunction of the SIR system. The steering wheel must be secured in position before disconnecting the following components:
   - The steering column
   - The intermediate shaft(s)
   - The steering gear

   After disconnecting these components, do not rotate the steering wheel or move the front tyres and wheels. Failure to follow this procedure may cause the SIR coil assembly to become un-centred and cause possible damage to the SIR coil. If you think the SIR coil has became uncentred, refer to your specific SIR coil's centring procedure to re-centre SIR Coil.

2. Remove the front bumper fascia. Refer to Front Bumper Fascia Removal and Installation : Volt → Ampera .
3. Support the radiator and condenser from above using the condenser tabs on each side.
4. Install the engine support fixture. Refer to Engine Support Fixture .
5. Remove the lower steering intermediate shaft bolt. Refer to Intermediate Steering Shaft Replacement .
6. Raise the vehicle on a hoist. Refer to Lifting and Jacking the Vehicle .
7. Remove the catalytic converter. Refer to Catalytic Converter Replacement .

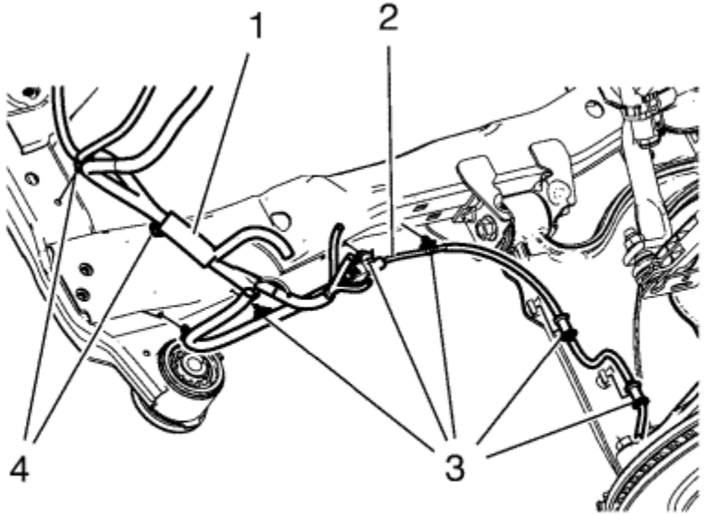

8. Remove the wheel speed sensor wiring harness (2) from the frame on both sides.

   Remove the wiring harness retainers (3) from the frame and the lower control arm.

9. Remove the heater inlet and outlet pipe bolts from frame. Refer to Heater Inlet And Outlet Pipe Replacement .
10. Position the heater water auxiliary pump and support to the side. Refer to Heater Water Auxiliary Pump Replacement .

    Caution: Electrostatic discharge (ESD) can damage many solid-state electrical components. ESD susceptible components may or may not be labelled with the ESD symbol. Handle all electrical components carefully. Use the following precautions in order to avoid ESD damage:
    - Touch a metal ground point in order to remove your body's static charge before servicing any electronic component; especially after sliding across the vehicle seat.
    - Do not touch exposed terminals. Terminals may connect to circuits susceptible the ESD damage.
    - Do not allow tools to contact exposed terminals when servicing connectors.
    - Do not remove components from their protective packaging until required to do so.
    - Avoid the following actions unless required by the diagnostic procedure:
      - Jumpering or grounding of the components or connectors.
      - Connecting test equipment probes to components or connectors. Connect the earth lead first when using test probes.
    - Ground the protective packaging of any component before opening. Do not rest solid-state components on metal workbenches, or on top of TVs, radios, or other electrical devices.

11. Disconnect the electrical connectors from the electronic power steering assembly. Refer to FEP Connectors : Steering Gear .
12. Remove the wire harness bracket and bolt from the power steering gear.
13. Remove the lower ball joints from the steering knuckles. Refer to Steering Knuckle Replacement .

14. Remove the stabiliser link nut from the strut, then discard the nut. Refer to Stabilizer Shaft Link Replacement .
15. Remove the outer track rods and track rod nuts from the steering knuckles. Refer to Steering Linkage Outer Track rod Replacement .
16. Remove the rear transmission mount to rear transmission mount bracket through bolt. Refer to Transmission Rear Mount Replacement .
17. Lower the vehicle until the drivetrain and front suspension frame contacts the engine support table.

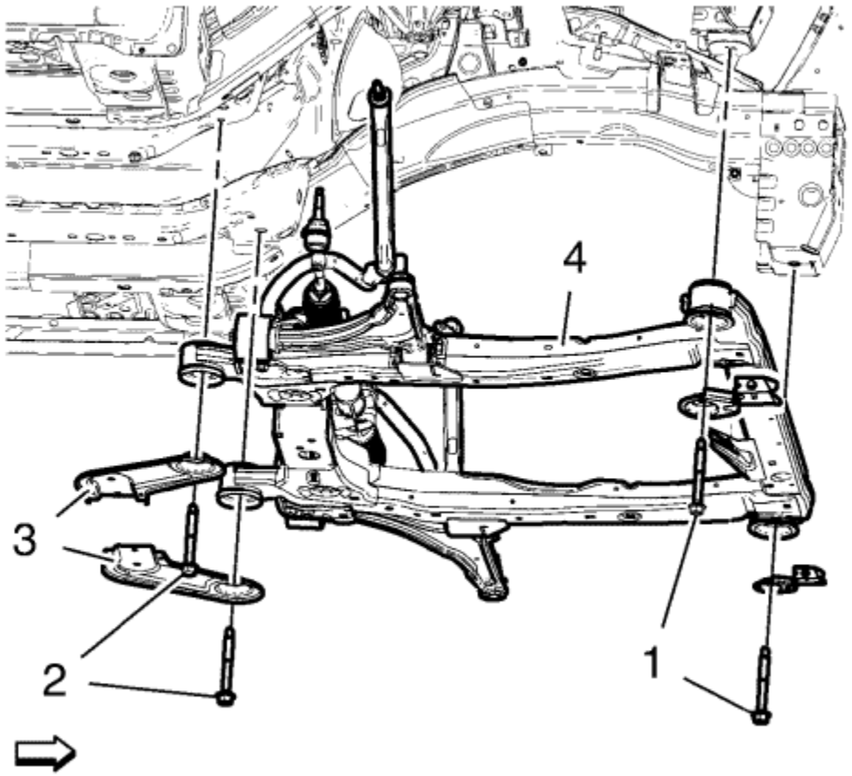

18. Remove the frame front bolts (1).
19. Remove the frame rear bolts (2).
20. Remove the frame reinforcements (3).
21. Remove the frame (4) from the vehicle.
22. Remove the following components if replacing the frame:
    - The lower control arms--Refer to Lower Control Arm Replacement .
    - The stabilizer shaft--Refer to Stabilizer Shaft Replacement .
    - The radiator support brackets
    - The steering gear--Refer to Steering Gear Replacement .

- The rear transmission mount--Refer to Transmission Rear Mount Replacement .

Installation Procedure

Caution : Refer to Fastener Caution in the Preface section.

1. Install the following components on the drivetrain and front suspension frame, if removed:
   - The rear transmission mount--Refer to Transmission Rear Mount Replacement .
   - The radiator support brackets--Tighten the fasteners to **22 N·m (16 lb ft)**.
   - The stabilizer shaft--Refer to Stabilizer Shaft Replacement .
   - The lower control arms--Refer to Lower Control Arm Replacement .
   - The steering gear--Refer to Steering Gear Replacement .
2. Install the frame to the vehicle.
3. Install the frame rear bolts (2) and tighten to **160 N·m (118 lb ft)**.
4. Install the frame front bolts (1) and tighten to **160 N·m (118 lb ft)**.
5. Install the frame reinforcements (3) and tighten to **58 N·m (43 lb ft)**.
6. Install the rear transmission mount to rear transmission mount bracket through bolt. Refer to Transmission Rear Mount Replacement .
7. Install the outer track rods and track rod nuts to the steering knuckles. Refer to Steering Linkage Outer Track rod Replacement .

   Caution: Electrostatic discharge (ESD) can damage many solid-state electrical components. ESD susceptible components may or may not be labelled with the ESD symbol. Handle all electrical components carefully. Use the following precautions in order to avoid ESD damage:
   - Touch a metal ground point in order to remove your body's static charge before servicing any electronic component; especially after sliding across the vehicle seat.
   - Do not touch exposed terminals. Terminals may connect to circuits susceptible the ESD damage.
   - Do not allow tools to contact exposed terminals when servicing connectors.
   - Do not remove components from their protective packaging until required to do so.
   - Avoid the following actions unless required by the diagnostic procedure:
     - Jumpering or grounding of the components or connectors.
     - Connecting test equipment probes to components or connectors. Connect the earth lead first when using test probes.
   - Ground the protective packaging of any component before opening. Do not rest solid-state components on metal workbenches, or on top of TVs, radios, or other electrical devices.
8. Install the wire harness bracket to the power steering gear. Tighten the wire harness bracket bolts to **9 N·m (80 lb in)**.
9. Connect the electrical connectors to the electronic power steering assembly. Refer to FEP Connectors : Steering Gear .

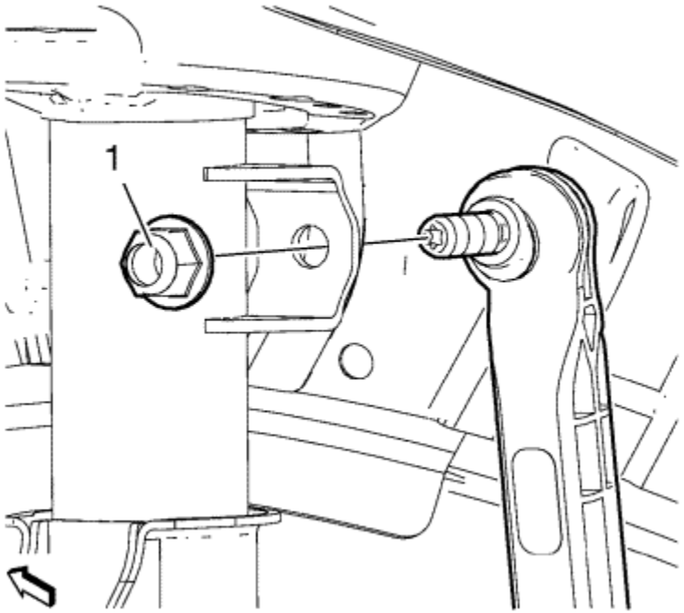

10. Install the stabiliser shaft link. Tighten the steering linkage tie rod nut stabiliser shaft link nuts to **65 N·m (48 lb ft)**.
11. Install the lower ball joints to the steering knuckles. Refer to Steering Knuckle Replacement .

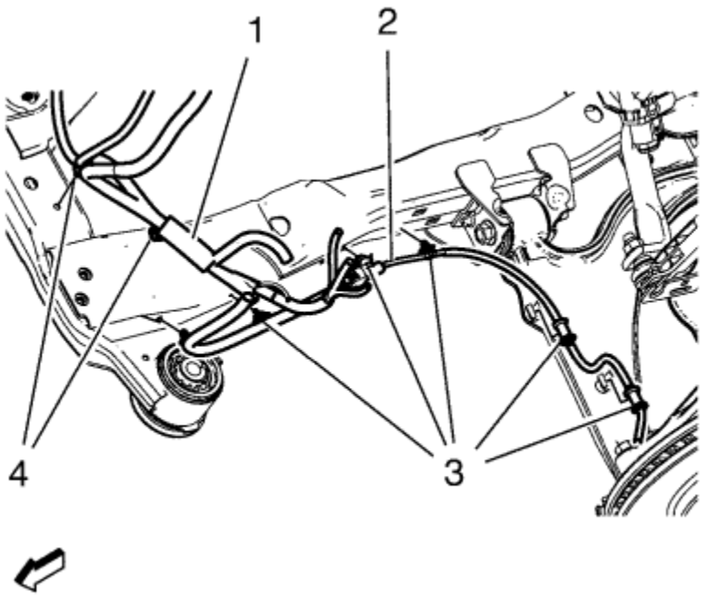

12. Install the wheel speed sensor wiring harness (2) to the frame on both sides.

    Install the wiring harness retainers (3) to the frame and the lower control arm.

13. Install the heater water auxiliary pump and support to the frame. Refer to Heater Water Auxiliary Pump Replacement .
14. Install the heater inlet and outlet pipe fasteners to the frame. Refer to Heater Inlet And Outlet Pipe Replacement .
15. Install the catalytic converter. Refer to Catalytic Converter Replacement .
16. Lower the vehicle.
17. Remove the support of the radiator and condenser.
18. Install the lower steering intermediate shaft. Refer to Intermediate Steering Shaft Replacement .
19. Remove the engine support fixture from the vehicle.
20. Install the front bumper fascia. Refer to Front Bumper Fascia Removal and Installation : Volt → Ampera .
21. Check the wheel alignment. Refer to Wheel Alignment Measurement .
22. Enable the high voltage system. Refer to High Voltage Enabling .

&#169© Copyright Chevrolet. All rights reserved

Drivetrain and Front Suspension Frame Front Insulator Replacement

Special Tools

- *CH-906-14* Adapter
- *CH-906-42* Adapter
- *CH-50342* Threaded Rod

For equivalent regional tools. Refer to Special Tools .

Removal Procedure

1. Remove the drivetrain and front suspension frame. Refer to Drivetrain and Front Suspension Frame Replacement .

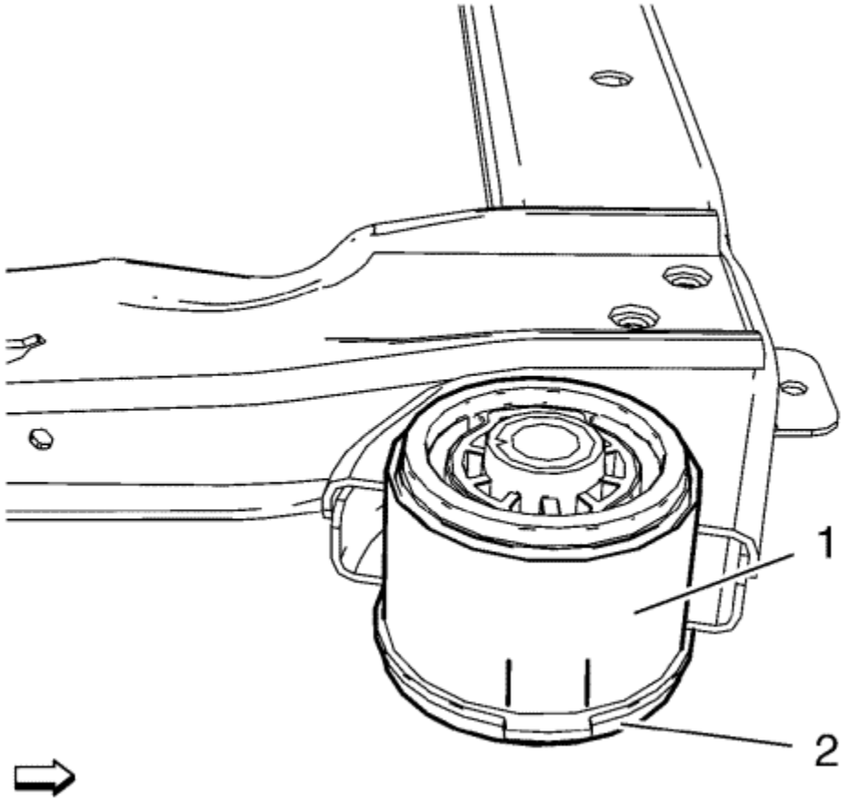

2. Mark Installation position of insulator (2) at frame (1).

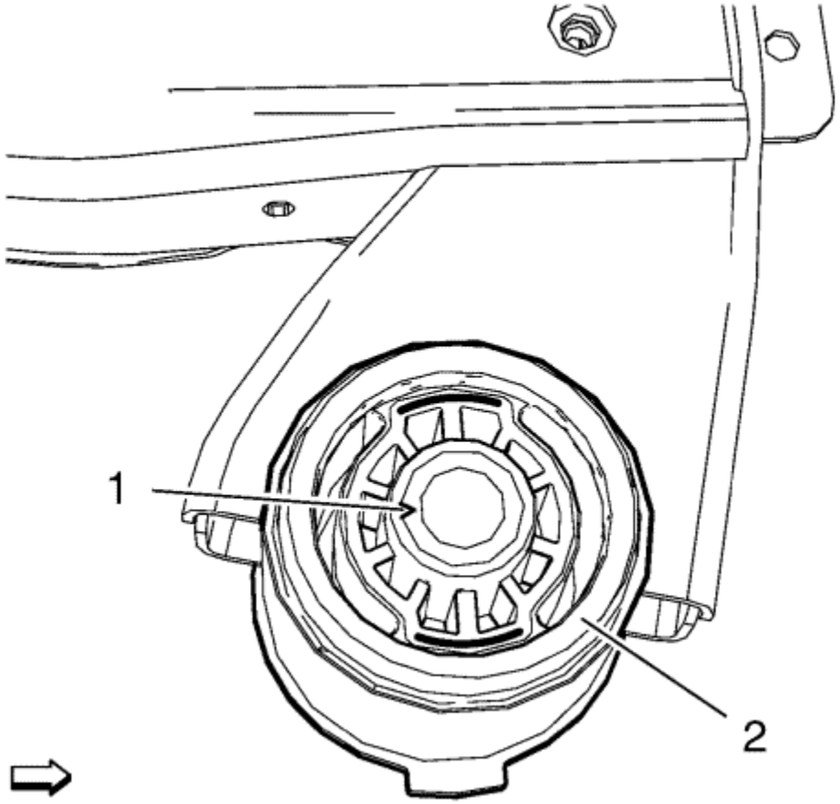

Note : Drilling holes into the insulator rubber to ease removal of the core.

3. Cut out frame insulator core (1) from frame insulator (2).

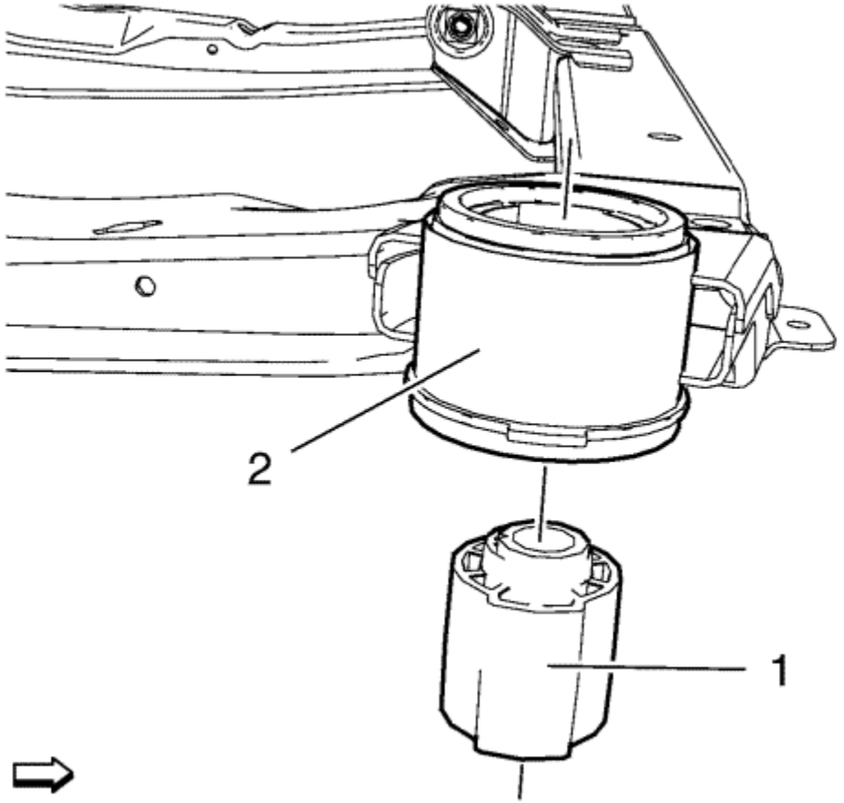

4. Remove frame insulator core (1) from outer frame insulator (2).

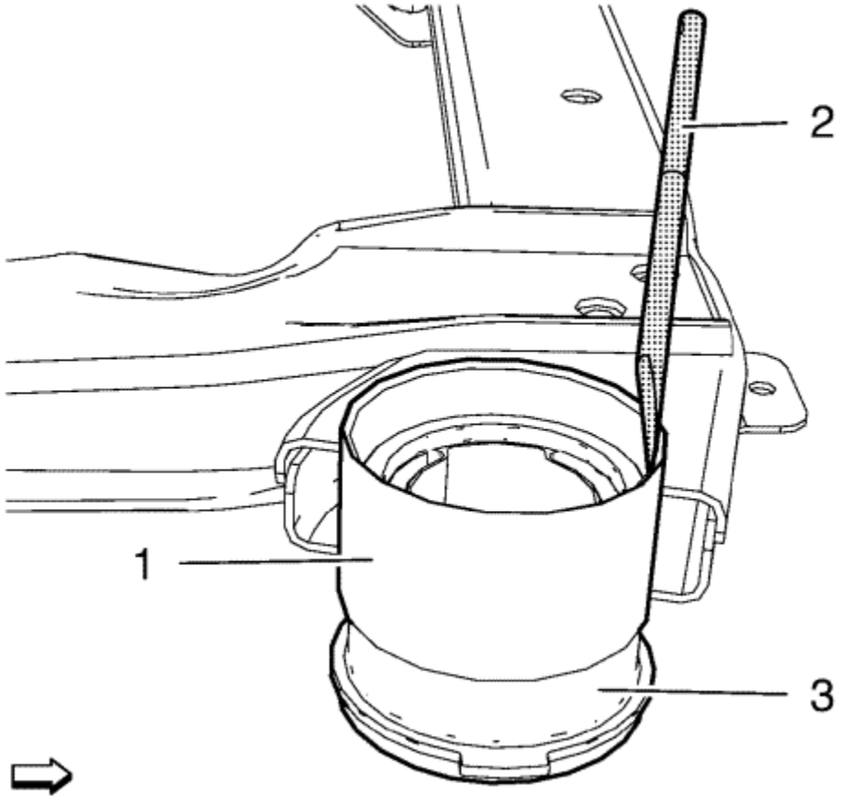

5. Remove the frame insulator (3) from drivetrain and front suspension frame (1) using a chisel (2) or equivalent.

Installation Procedure

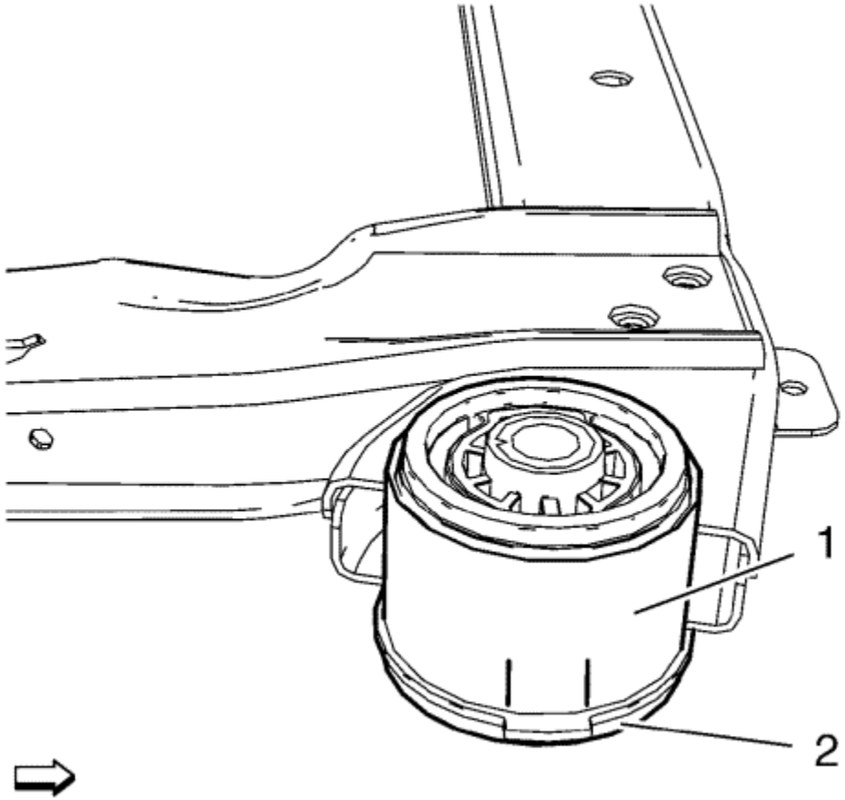

1. Install the following components on the drivetrain and front suspension frame:
   - *CH-906-14* Adapter .
   - *CH-906-42* Adapter .
   - *CH-50342* Threaded Rod.

     Note: Check marking of frame insulator.

   - Align the insulator tab with the alignment marks (1) on the frame.
2. Carefully install the frame insulator in to the front suspension frame.
3. Install the drivetrain and front suspension frame. Refer to Drivetrain and Front Suspension Frame Replacement .

&#169© Copyright Chevrolet. All rights reserved

Front Wheelhouse Front Liner Replacement

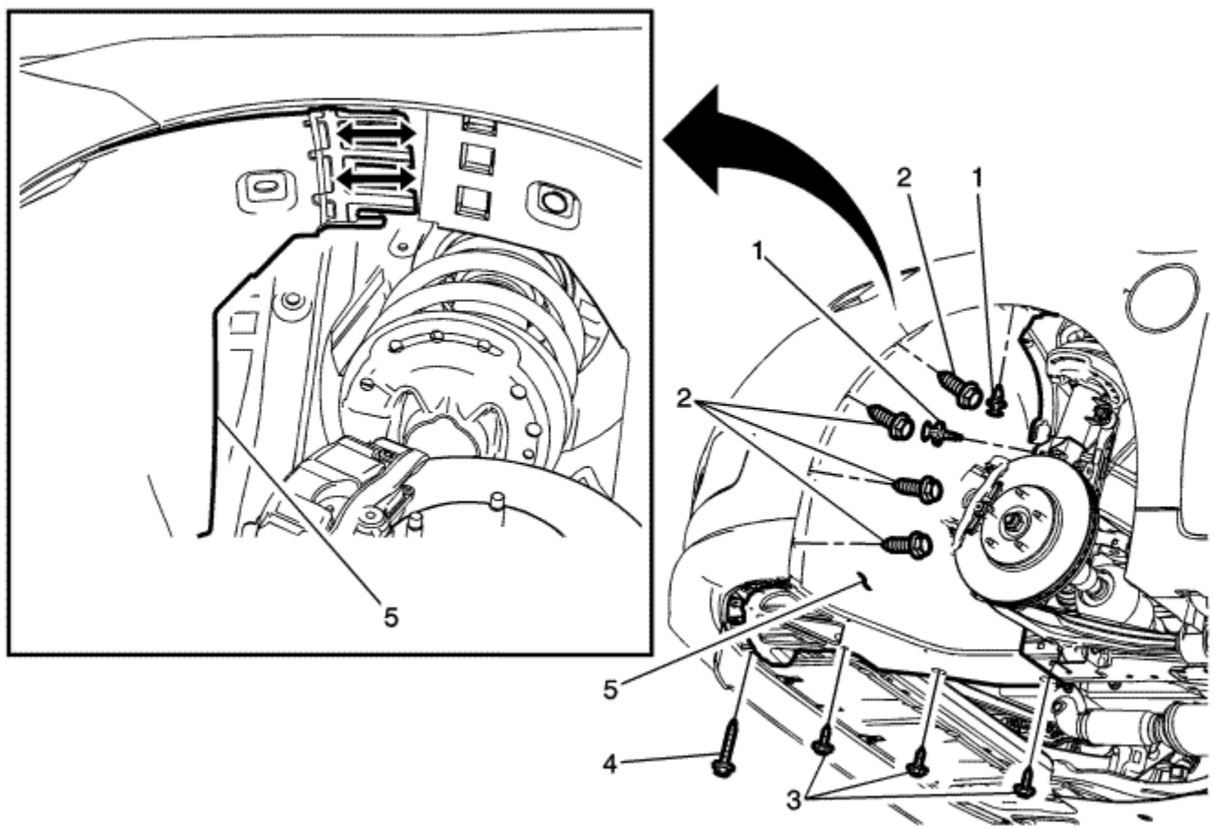

Callout	Component Name
Preliminary Procedure Remove the tyre and wheel assembly. Refer to Tyre and Wheel Removal and Installation .	
1	Front Wheelhouse Liner Push-In Retainer - Front (Qty: 2)
	Front Wheelhouse Liner Screw - Front (Qty: 4)

2	**Caution :** Refer to Fastener Caution in the Preface section. **Tighten** 3 N·m (27 lb in)
3	Front Wheelhouse Liner - Front Lower Screw (Qty: 3) **Tighten** 3 N·m (27 lb in)
4	Front Wheelhouse Liner - Front Lower Front Screw (Qty: 5) **Tighten** 3 N·m (27 lb in)
5	Front Wheelhouse Liner - Front **Procedure** Disengage the upper interlocking retainers.

© Copyright Chevrolet. All rights reserved

Front Wheelhouse Rear Liner Replacement

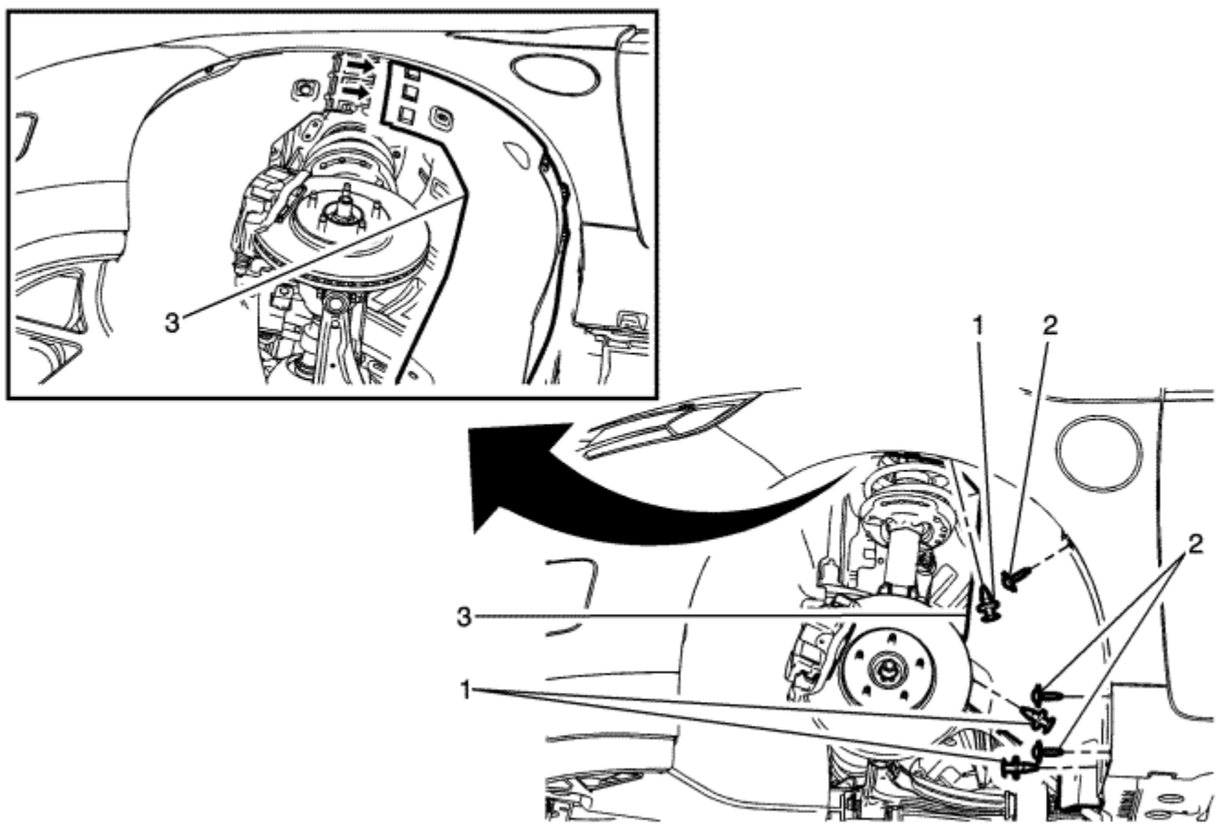

Callout	Component Name
Preliminary Procedure Remove the tyre and wheel assembly. Refer to Tyre and Wheel Removal and Installation .	
1	Front Wheelhouse Rear Liner Push-In Retainer (Qty: 3)
	Front Wheelhouse Rear Liner Screw (Qty: 3)

2	**Caution :** Refer to Fastener Caution in the Preface section. **Tighten** 3 N·m (27 lb in)
3	Front Wheelhouse Rear Liner **Procedure** Disengage the upper interlocking retainers.

© Copyright Chevrolet. All rights reserved

Rear Wheelhouse Panel Liner Replacement

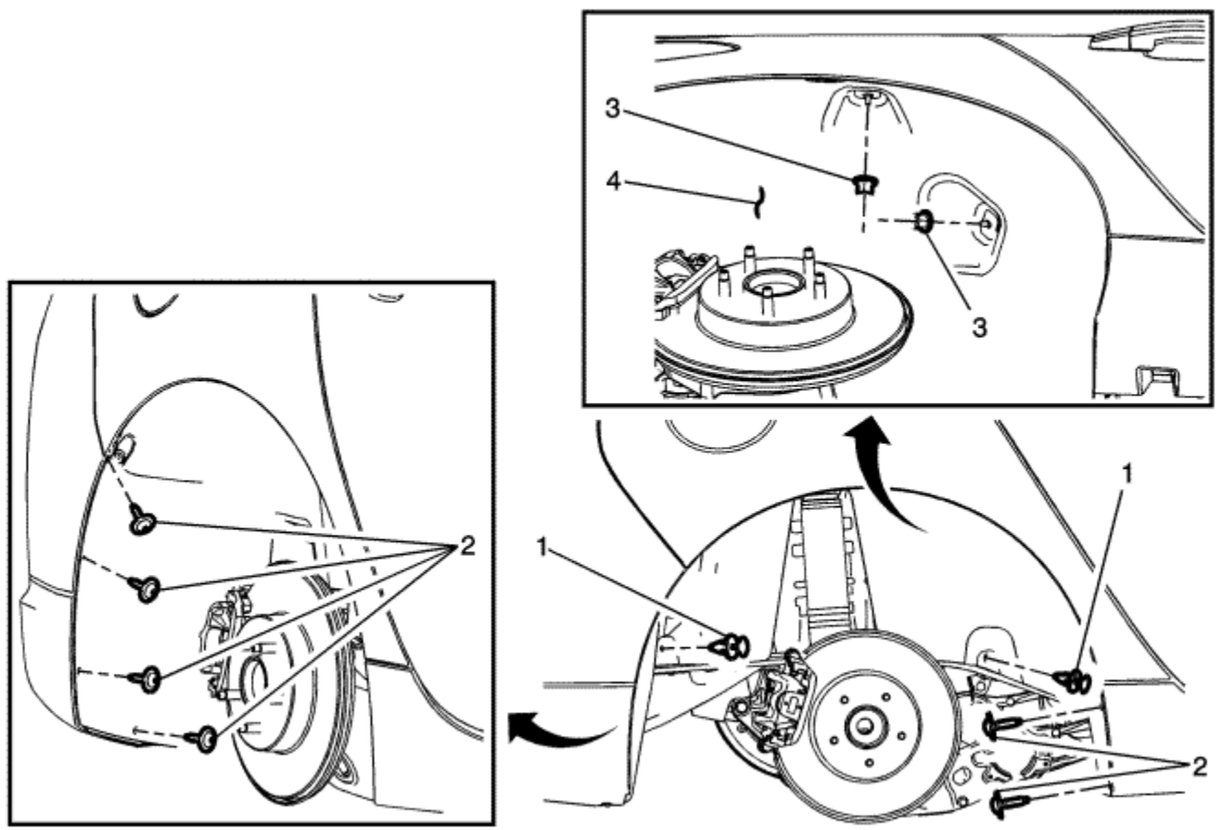

Callout	Component Name
Preliminary Procedure Remove the tyre and wheel assembly. Refer to Tyre and Wheel Removal and Installation .	
1	Rear Wheelhouse Panel Liner Push-In Retainer (Qty: 2)
	Rear Wheelhouse Panel Liner Screw (Qty: 6)

2	**Caution :** Refer to Fastener Caution in the Preface section. **Tighten** 3 N·m (27 lb in)
3	Rear Wheelhouse Panel Liner Nut **Tighten** 2 N·m (18 lb in)
4	Rear Wheelhouse Panel Liner

© Copyright Chevrolet. All rights reserved

Special Tools

Illustration	Tool Number/ Description
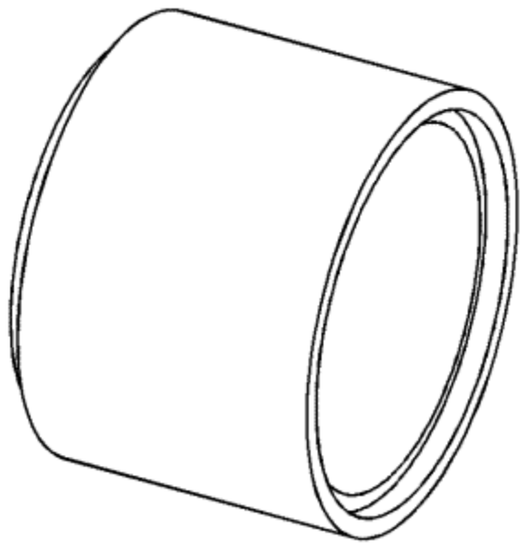	CH 906-14 Adapter
	CH 906-42 Adapter

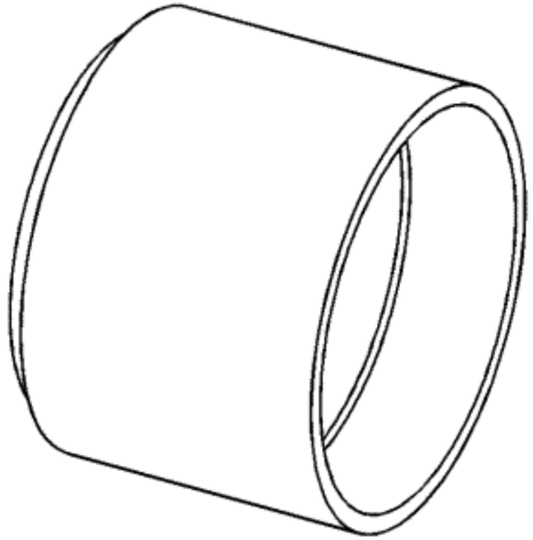	
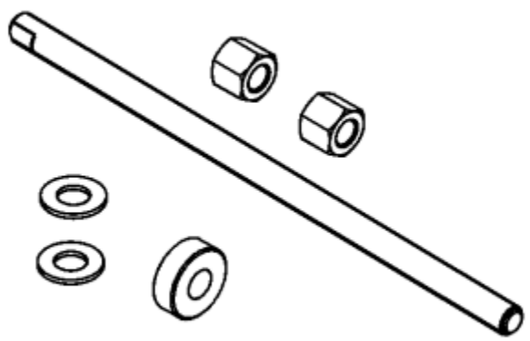	CH 50342 Threaded Rod

© Copyright Chevrolet. All rights reserved

Fastener Tightening Specifications

Application	Specification	
	Metric	English
Front Side Door Weatherstrip Retainer Screws	2.5 N·m	22 lb in
Front Side Door Window Channel Bolts	11 N·m	97 lb in
Front Side Door Window Guide Nuts	10 N·m	89 lb in
Front Side Door Window Outer Weatherstrip Lower Screws	11 N·m	97 lb in
Front Side Door Window Outer Weatherstrip Upper Screws	2.5 N·m	22 lb in
Front Side Door Window Rear Channel Bolts	11 N·m	97 lb in
Front Side Door Window Regulator Bolts	11 N·m	97 lb in
Front Side Door Window Regulator Motor Screws	5 N·m	44 lb in
Front Side Door Window Upper Belt Reveal Molding Screw	2.5 N·m	22 lb in
Rear Side Door Weatherstrip Retainer Screws	2.5 N·m	22 lb in
Rear Side Door Window Channel Bolts	11 N·m	97 lb in
Rear Side Door Window Guide Nuts	10 N·m	89 lb in
Rear Side Door Window Outer Weatherstrip Lower Screws	11 N·m	97 lb in
Rear Side Door Window Outer Weatherstrip Upper Screws	2.5 N·m	22 lb in
Rear Side Door Rear Channel Bolts	11 N·m	97 lb in
Rear Side Door Window Regulator Bolt	11 N·m	97 lb in
Rear Side Door Window Regulator Motor Bolt	5 N·m	44 lb in
Rear Side Door Window Upper Belt Reveal Molding Screw	2.5 N·m	22 lb in

© Copyright Chevrolet. All rights reserved

Moveable Window Schematics

Figure 1: Driver
Figure 2: Passenger
Figure 3: Rear

© Copyright Chevrolet. All rights reserved

Demister Schematics

Demister

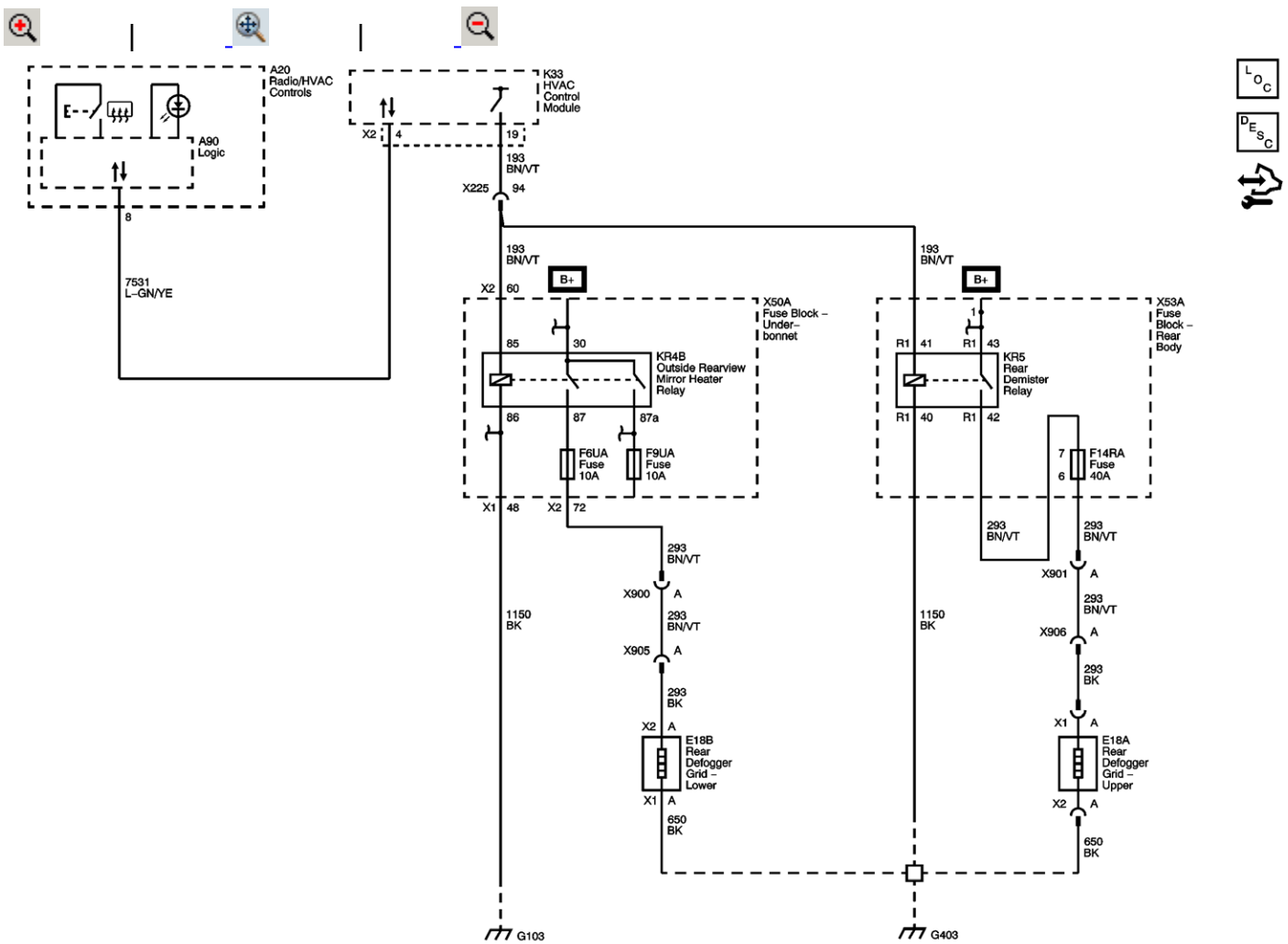

Master Electrical Component List

Rear Window Demister Description and Operation

F6UA, F9UA, F22UA, F23UA, F40UA, F41UA and F43UA Fuses

F6RA, F11RA, F14RA and F16RA Fuses

G103, G104 and G105

G403

© Copyright Chevrolet. All rights reserved

DTC B0283

Diagnostic Instructions

- Perform the Diagnostic System Check - Vehicle prior to using this diagnostic procedure.
- Review Strategy Based Diagnosis for an overview of the diagnostic approach.
- Diagnostic Procedure Instructions provides an overview of each diagnostic category.

DTC Descriptors

DTC B0283 02: Rear Defrost Circuit Short To Ground

DTC B0283 05: Rear Defrost Circuit High Voltage/Open

Diagnostic Fault Information

Circuit	Short to Ground	Open/High Resistance	Short to Voltage	Signal Performance
Outside Wing Mirror Heater Relay Control	B0283 02	1	B0283 05	--
Rear Demister Relay Control	B0283 02	1	B0283 05	--
1. Rear Demister Inoperative				

Circuit/System Description

When the HVAC control module receives a rear window demist request from the HVAC control faceplate, the HVAC control module will supply voltage to the relay coil. Battery positive voltage is supplied at all times to the relay switched input and the relay coil is always grounded. This allows battery positive voltage from the relay switched input to flow through the switch contacts and out the relay switched output to the rear window demister grid.

Conditions for Running the DTC

Battery voltage must be between 9-16 V.

Conditions for Setting the DTC

B0283 02

The HVAC control module detects a short to ground on a relay control circuit for 1 second or greater.

B0283 05

The HVAC control module detects a short to voltage or an open/high resistance a relay control circuit for 1 second or greater.

Action Taken When the DTC Sets

B0283 02

The rear window demister will be inoperative.

B0283 05

The rear window demister will malfunction.

Conditions for Clearing the DTC

- The DTC will be current for as long as the fault is present.
- When the fault is no longer present, the DTC will be a history DTC.
- A history DTC will clear after 50 ignition cycles.

Reference Information

Schematic Reference

Demister Schematics

Connector End View Reference

Component Connector End Views

Description and Operation

Rear Window Demister Description and Operation

Electrical Information Reference

- Circuit Testing
- Connector Repairs
- Testing for Intermittent Conditions and Poor Connections
- Wiring Repairs

Scan Tool Reference

Control Module References for scan tool information

Circuit/System Verification

Vehicle ON, command the Rear Demist ON and OFF with a scan tool, the upper and lower rear window demister grids should turn ON and OFF when changing between the commanded states.

Circuit/System Testing

1. Vehicle OFF, disconnect the KR5 rear window demister relay.
2. Vehicle OFF, disconnect the KR4B outside wing mirror heater relay.
3. Connect a test lamp between the control circuit terminal 85 and the ground circuit terminal 86 of the KR4B outside wing mirror heater relay.
4. Vehicle ON, command the Rear Demist ON and OFF with a scan tool. The test lamp should turn ON and OFF when changing between the commanded states.
   If the test lamp is always ON, test the control circuit for a short to voltage. If the circuit tests normal, replace the K33 HVAC control module.
   If the test lamp is always OFF, test the control circuit for a short to ground or an open/high resistance. If the circuit tests normal, replace the K33 HVAC control module.
5. Vehicle OFF, connect the KR4B outside wing mirror heater relay.
6. Vehicle ON, command the Rear Demist ON and OFF with a scan tool, DTC B0283 should not reset.
   If DTC B0283 is current, test or replace the KR4B outside wing mirror heater relay.
7. If all circuits test normal, test or replace the KR5 rear window demister relay.

Component Testing

Relay Test

1. Vehicle OFF, disconnect the appropriate relay.
2. Test for 60-180 Ω between terminals 85 and 86.
   If not within the specified range, replace the relay.
3. Test for infinite resistance between the following terminals:
   - 30 and 86

     30 and 87

-
- 30 and 85
- 85 and 87

  If not the specified value, replace the relay.

4. Install a 3A fused jumper wire between relay terminal 85 and 12 V. Install a jumper wire between relay terminal 86 and ground. Test for less than 2 Ω between terminals 30 and 87.
   If greater than the specified range, replace the relay.

Repair Instructions

Perform the Diagnostic Repair Verification after completing the diagnostic procedure.

- Relay Replacement : Within an Electrical Centre → Attached to Wire Harness
- Control Module References for HVAC control module replacement, programming and setup

&#169© Copyright Chevrolet. All rights reserved

DTC B316B, B317A, B318A, or B319A

Diagnostic Instructions

- Perform the Diagnostic System Check - Vehicle prior to using this diagnostic procedure.
- Review Strategy Based Diagnosis for an overview of the diagnostic approach.
- Diagnostic Procedure Instructions provides an overview of each diagnostic category.

DTC Descriptors

DTC B316B 00: Driver Window Switch

DTC B316B 02: Driver Window Switch Short to Ground

DTC B316B 39: Driver Window Switch Internal Electronic Failure

DTC B317A 02: Right Front/Passenger Window Switch Short to Ground

DTC B318A 02: Left Rear Window Switch Short to Ground

DTC B319A 02: Right Rear Window Switch Short to Ground

Diagnostic Fault Information

Circuit	Short to Ground	Open/High Resistance	Short to Voltage	Signal Performance
Driver Window Motor Control	B316B 02	1	1	--
1. Driver Window Malfunction				

Circuit/System Description

The body control module (BCM) monitors, receives and transmits serial data to each of the doors switches and window motors. When a window switch has been activated on the driver window switch, a signal is sent to the BCM which sends a signal to the appropriate window motor and the window motor will move in the direction commanded.

Conditions for Running the DTC

Battery voltage must be between 9-16 V.

Conditions for Setting the DTC

B316B 00

The BCM has detected the driver right front or left rear or right rear window switch is active for greater than 60 seconds.

B316B 02

The BCM has detected the driver left front window switch is active for greater than 60 seconds.

B317A 02

The BCM has detected the passenger window switch is active for greater than 60 seconds.

B318A 02

The BCM has detected the left rear window switch is active for greater than 60 seconds

B319A 02

The BCM has detected the right rear window switch is active for greater than 60 seconds

Action Taken When the DTC Sets

The affected power window will malfunction.

Conditions for Clearing the DTC

B316B 00, B316B 02, B317A 02, B318A 02, B319A 02

- The DTC will be current for as long as the fault is present.
- The DTC will change from current to history when the fault is no longer present.
- A history DTC will clear after 100 consecutive ignition cycles if the condition for the malfunction is no longer present.

B316B 39

If the DTC is current, the driver window switch must be replaced before the DTC can be cleared.

Reference Information

Schematic Reference

Moveable Window Schematics

Connector End View Reference

Component Connector End Views

Description and Operation

Power Windows Description and Operation

Electrical Information Reference

- Circuit Testing
- Connector Repairs
- Testing for Intermittent Conditions and Poor Connections
- Wiring Repairs

Scan Tool Reference

Control Module References for scan tool information

Circuit/System Verification

Vehicle in Service Mode, command each window UP and DOWN by using each switch on the S79D window switch-driver and by using the S79P window switch-passenger, the S79LR window switch-left rear and the S79RR window switch-right rear. Each window should perform the UP and DOWN functions from each switch.

If the driver window does not perform as specified, refer to Driver Window Malfunction.
If the passenger window, left rear window or right rear window does not perform as specified, refer to Passenger/Rear Window Malfunction.

Circuit/System Testing

Driver Window Malfunction

1. Vehicle Off, disconnect the harness connector at the S79D window switch-driver.
2. Vehicle in Service Mode, verify that the scan tool Driver Window Main Control Down Switch parameter is Inactive.
   If not the specified value, test the control circuit terminal 3 for a short to ground. If the circuit tests normal, test or replace the M74D window motor-driver.
3. Verify that the scan tool Driver Window Main Control Up Switch parameter is Inactive.
   If not the specified value, test the control circuit terminal 6 for a short to ground. If the circuit tests normal, test or replace the M74D window motor-driver.
4. Verify that the scan tool Driver Window Main Control Express Switch parameter is Inactive.
   If not the specified value, test the control circuit terminal 2 for a short to ground. If the circuit tests normal, test or replace the M74D window motor-driver.
5. If all circuits test normal, test or replace the S79D window switch-driver.

Passenger/Rear Window Malfunction

1. Vehicle in Service Mode, verify that the scan tool Front Passenger Main Control Down Switch, Front Passenger Main Control Express Switch, Front Passenger Main Control Up Switch, Left Rear Window Main Control Down Switch, Left Rear Window Main Control Express Switch, Left Rear Window Main Control Up Switch, Right Rear Window Main Control Down Switch, Right Rear Window Main Control Express Switch, and Right Rear Window Main Control Up Switch parameters are inactive.
   If any of the parameters are always Active, replace the S79D window switch-driver.
2. Verify that the scan tool Passenger Window Switch at Door parameter is Inactive.
   If not the specified value, replace the S79P window switch-passenger.
3. Verify that the scan tool Left Rear Window Switch at Door parameter is Inactive.
   If not the specified value, replace the S79LR window switch-left rear.
4. Verify that the scan tool Right Rear Window Switch at Door parameter is Inactive.
   If not the specified value, replace the S79RR window switch-right rear.

Repair Instructions

Perform the Diagnostic Repair Verification after completing the diagnostic procedure.

- Rear Side Door Window Switch Replacement
- Front Side Door Window Switch Replacement
- Front Side Door Window and Multifunction Switch Replacement
- Front Side Door Window Regulator Motor Replacement

&#169© Copyright Chevrolet. All rights reserved

DTC B3205

Diagnostic Instructions

- Perform the Diagnostic System Check - Vehicle prior to using this diagnostic procedure.
- Review Strategy Based Diagnosis for an overview of the diagnostic approach.
- Diagnostic Procedure Instructions provides an overview of each diagnostic category.

DTC Descriptors

DTC B3205 00: Driver Window Motor Circuit

DTC B3205 39: Driver Window Motor Circuit Internal Electronic Failure

DTC B3205 42: Driver Window Motor Circuit Calibration Data Set Not Programmed

DTC B3205 4B: Driver Window Motor Circuit Calibration Not Learned

Circuit/System Description

The body control module (BCM) monitors, receives and transmits serial data to each of the doors switches and window motors. When a window switch has been activated on the driver window switch, a signal is sent to the BCM which sends a signal to the appropriate window motor and the window motor will move in the direction commanded.

Conditions for Running the DTC

- The Vehicle in Service Mode.
- Battery voltage must be between 9-16 V.

Conditions for Setting the DTC

B3205 00

The BCM has detected that the compatibility code stored in the driver window motor does not match the compatibility code stored in the BCM.

B3205 39

An internal malfunction has been detected by the BCM in the driver window motor while commanding the window UP or DOWN.

B3205 42

The BCM will automatically attempt to download the calibration program into the driver window motor (As will occur when the window motor has been replaced), if the first calibration program fails to load, the BCM will attempt to download the calibration program a second time. If this download fails, the BCM will set appropriate DTC.

B3205 4B

The BCM has detected that the driver window is not "normalised" and can set for the following reasons:

- When the battery has been disconnected
- When the battery has been replaced
- When the door wiring harness has been disconnected
- When the window motor has been disconnected.

Action Taken When the DTC Sets

The driver power window will malfunction.

Conditions for Clearing the DTC

B3205 00

Installing a compatible window motor for that specific make and model vehicle.

B3205 39

The driver window motor must be replaced before the DTC can be cleared.

B3205 42

The driver window motor must be replaced before the DTC can be cleared.

B3205 4B

The driver window motor must be normalised before the DTC can be cleared.

Reference Information

Schematic Reference

Moveable Window Schematics

Connector End View Reference

Component Connector End Views

Description and Operation

Power Windows Description and Operation

Electrical Information Reference

- Circuit Testing
- Connector Repairs
- Testing for Intermittent Conditions and Poor Connections
- Wiring Repairs

Scan Tool Reference

Control Module References for scan tool information

Circuit/System Verification

B3205 00, B3205 39, B3205 42

1. Vehicle in Service Mode, command the driver window UP and DOWN with a scan tool. The driver window should perform the UP and DOWN functions.

   Note: If the window performs the UP and DOWN functions, clear the DTC

2. Replace the M74D window motor--driver with a M74D window motor--driver compatible for that specific make and model vehicle.

Circuit/System Testing

Note: The all doors must be completely closed prior to normalising the windows, a door that is open or ajar may cause the power window to function abnormally or it may become inoperative during the normalisation procedure. If this occurs, verify that the door is completely closed then repeat the normalisation procedure.

1. Vehicle in Service Mode, starting with the window completely UP, press and hold the driver power window switch until the window is fully open and continue holding the switch down for approximately 5 seconds after the window is completely open.
2. Pull the power window switch up until the window is fully closed and continue holding the switch up for approximately 5 seconds after the window is completely closed.
3. Command the window to express UP and express DOWN by pressing the window switch past the first detent and releasing and then pulling the window switch past the first detent and releasing. The window should perform the express UP and express DOWN functions.
   If the M74D window motor--driver does not perform as specified and the DTC resets, verify the vehicle doors are closed and repeat the normalisation procedure.

Repair Instructions

Perform the Diagnostic Repair Verification after completing the diagnostic procedure.

- Front Side Door Window Regulator Motor Replacement
- Control Module References for BCM replacement, programming and setup

&#169© Copyright Chevrolet. All rights reserved

Symptoms - Fixed and Moveable Windows

Important Preliminary Checks Before Starting:

1. Perform the Diagnostic System Check - Vehicle before using the symptom tables in order to verify that all of the following are true:
   - There are no DTCs set.
   - The control modules can communicate via the serial data link.
2. Review the power window system operation or rear window demister system operation in order to familiarise yourself with the system functions. Refer to the following:
   - Rear Window Demister Description and Operation
   - Power Windows Description and Operation

Visual/Physical Inspection

- Inspect for aftermarket devices which could affect the operation of the rear window demister. Refer to Checking Aftermarket Accessories .
- Inspect the easily accessible or visible system components for obvious damage or conditions which could cause the symptom.

Intermittent

Note:

- Inspect for proper installation of electrical components if an intermittent condition exists. Inspect for aftermarket theft deterrent devices, lights, and mobile phones. Ensure that no aftermarket equipment is connected to the class 2 circuit. If you can not locate an intermittent condition, a mobile phone signal may cause the condition. Faulty electrical connections or wiring may be the cause of intermittent conditions. Refer to Testing for Intermittent Conditions and Poor Connections .
- The problem may or may not turn ON the SERVICE VEHICLE SOON indicator or store a DTC. Do not use the symptom tables to diagnose intermittent conditions. The malfunction must be present in order to locate the problem.

Poor electrical connections or wiring cause most intermittent conditions. Perform a careful visual/physical check for the following conditions:

- Poor mating of the connector halves or a terminal not fully seated in the connector body
- An improperly formed or damaged terminal
- Reform or replace connector terminals in the problem circuit in order to ensure proper contact tension.
- Poor terminal to wire connection requires removing the terminal from the connector body in order to perform the check.

Use a scan tool in order to help detect intermittent conditions. The scan tool has several features that can be used to locate an intermittent condition. The snapshot feature can

capture and store data parameters within the scan tool when the malfunction occurs. This information can then be reviewed in order to see what caused the malfunction.

Symptom List

Refer to a symptom diagnostic procedure from the following list in order to diagnose the symptom:

- Rear Window Demister Malfunction
- Power Windows Malfunction

&#169© Copyright Chevrolet. All rights reserved

Rear Window Demister Malfunction

Diagnostic Instructions

- Perform the Diagnostic System Check - Vehicle prior to using this diagnostic procedure.
- Review Strategy Based Diagnosis for an overview of the diagnostic approach.
- Diagnostic Procedure Instructions provides an overview of each diagnostic category.

Diagnostic Fault Information

Circuit	Short to Ground	Open/High Resistance	Short to Voltage	Signal Performance
Outside Wing Mirror Heater Relay B+	2	2	--	--
Rear Demist Relay B+	1	1	--	--
Outside Wing Mirror Heater Relay Control	B0283 02	2	B0283 05	--
Rear Demist Relay Control	B0283 02	1	B0283 05	--
Upper Rear Demister Grid Control	2	2	2	--
Lower Rear Demister Grid Control	1	1	1	--
Lower Rear Window Demister Grid Ground	--	2	--	--
Upper Rear Window Demister Grid Ground	--	1	--	--
Outside Wing Mirror Heater Relay Ground	--	2	--	--
Rear Demist Relay Ground	--	1	--	--
1. Upper Rear Demister Grid Malfunction 2. Lower Rear Demister Grid Malfunction				

Circuit/System Description

When the HVAC control module receives a rear window demist request from the HVAC control faceplate, the HVAC control module will supply voltage to the relay coil. Battery positive voltage is supplied at all times to the relay switched input and the relay coil is always grounded. This allows battery positive voltage from the relay switched input to flow through the switch contacts and out the relay switched output to the rear window demister grid.

Diagnostic Aids

Rear window demister indicator will still function when the switch is pressed but any of the following conditions may cause the rear window demister not to function:

- Ambient temperature at the HVAC control module must be less than 10°C (50°F).
- System voltage is out of range.
- A DTC is set that disables rear window demister functionality.

Reference Information

Schematic Reference

Demister Schematics

Connector End View Reference

Component Connector End Views

Description and Operation

Rear Window Demister Description and Operation

Electrical Information Reference

- Circuit Testing
- Connector Repairs
- Testing for Intermittent Conditions and Poor Connections
- Wiring Repairs

Scan Tool Reference

Control Module References for scan tool information

Circuit/System Verification

1. Vehicle ON, observe the scan tool Rear Demister Switch parameter while pressing the heated rear window switch, the parameter should change from Inactive to Active.
   If the value does not change, replace the A20 radio/HVAC control.
2. Command the Rear Demist Indicator ON and OFF with a scan tool. The indicator should turn ON or OFF while changing between the commanded states.
   If the demister indicator is always ON or always OFF, replace the A20 radio/HVAC control.

3. Command the Rear Demist ON and OFF with a scan tool, the upper and lower rear window demister grids should turn ON and OFF when changing between the commanded states.
   If a single rear window demister grid does not turn ON and OFF when changing between the commanded states, refer to Single Rear Window Demist Grid Malfunction.
   If both rear window demister grids do not turn ON and OFF when changing between the commanded states, refer to Rear Window Demister Malfunction.

Circuit/System Testing

Single Rear Window Demist Grid Malfunction

1. Vehicle OFF, disconnect the harness connector at the appropriate E18 rear window demister grid.
2. Test for less than 10 Ω between the ground circuit terminal listed below and ground:
   - Terminal A E18B rear demister grid-lower.
   - Terminal 1 E18A rear demister grid-upper

   If greater than the specified range, test the ground circuit for an open/high resistance.
3. Disconnect the appropriate KR4B outside wing mirror relay or the KR5 rear demister relay.
4. Test for less than 10 Ω between the ground circuit terminal listed below and ground.
   - Terminal 40 KR5 rear demister relay.
   - Terminal 86 KR4B outside wing mirror heater relay.

   If greater than the specified range, test the ground circuit for an open/high resistance.
5. Vehicle ON, connect a 40A fused jumper wire between the circuit terminals listed below, verify the rear demister grid is activated:.
   - B+ terminal 43 and control terminal 42 KR5 rear demister relay.
   - B+ terminal 30 and control terminal 87 KR4B outside wing mirror heater relay.

   If the rear demister grid does not activate and the circuit fuse is open, test the control circuit for a short to ground. If the circuit tests normal, test or replace the E18 rear window demister grid.
   If the rear demister grid does not activate and the circuit fuse is good, test the control circuit for an open/high resistance. If the circuit tests normal, test or replace the E18 rear window demister grid.
6. If all circuits test normal, test or replace the relay.

Rear Window Demister Malfunction

1. Vehicle OFF, disconnect the KR5 rear window demister relay.
2. Vehicle OFF, disconnect the KR4B outside wing mirror heater relay.
3. Connect a test lamp between the control circuit terminal 85 and the ground circuit terminal 86 of the KR4B outside wing mirror heater relay.
4. Vehicle ON, command the Rear Demist ON and OFF with a scan tool. The test lamp should turn ON and OFF when changing between the commanded states.
   If the test lamp is always ON, test the control circuit for a short to voltage. If the circuit tests normal, replace the K33 HVAC control module.
   If the test lamp is always OFF, test the control circuit for a short to ground or an open/high resistance. If the circuit tests normal, replace the K33 HVAC control module.

5. Vehicle OFF, connect the KR4B outside wing mirror heater relay.
6. Vehicle ON, command the Rear Defog ON with a scan tool, the E18B rear demister grid-lower should turn ON.
   If the E18B rear demister grid-lower does not turn ON, test or replace the KR4B outside wing mirror heater relay.
7. If all circuits test normal, test or replace the KR5 rear window demister relay.

Component Testing

Rear Window Demister Grid Test

1. Vehicle ON, turn on the E18 rear window demister grid.
2. Verify that a test lamp illuminates between each E18 rear window demister grid line and ground. The test lamp should be off when testing at the ground side of the grid and get brighter as the test lamp moves closer to the voltage supply side of the grid. The test lamp should be dim when testing each grid line in the middle.
   If the test lamp remains bright at the middle of the grid line, test for an open between the test point and the ground side of the grid.
   If the test lamp remains off at the middle of the grid line, test for an open between the test point and the voltage supply side of the grid

Relay Test

1. Vehicle OFF, disconnect the appropriate relay.
2. Test for 60-180 Ω between terminals 1 and 2.
   If the not within the specified range, replace the relay.
3. Test for infinite resistance between the following terminals:
   - 3 and 2
   - 3 and 5
   - 3 and 1
   - 1 and 5

   If not the specified value, replace the relay.
4. Install a 5 A fused jumper wire between relay terminal 2 and 12 V. Install a jumper wire between relay terminal 1 and ground. Test for less than 2 Ω between terminals 3 and 5.
   If greater than the specified range, replace the relay.

Repair Instructions

Perform the Diagnostic Repair Verification after completing the diagnostic procedure.

- Tailgate Lower Window Replacement
- Tailgate Upper Window Replacement
- Relay Replacement : Within an Electrical Centre → Attached to Wire Harness
- Control Module References for HVAC control module and radio/HVAC control replacement, programming and setup

&#169© Copyright Chevrolet. All rights reserved

Power Windows Malfunction

Diagnostic Instructions

- Perform the Diagnostic System Check - Vehicle prior to using this diagnostic procedure.
- Review Strategy Based Diagnosis for an overview of the diagnostic approach.
- Diagnostic Procedure Instructions provides an overview of each diagnostic category.

Diagnostic Fault Information

Circuit	Short to Ground	Open/High Resistance	Short to Voltage	Signal Performance
Driver Window Switch B+	1, 2, 4	1	--	--
Driver Window Motor B+	U1534 00	U1534 00	--	--
Passenger Window Switch B+	1, 2, 4	2	--	--
Left Rear Window Switch B+	1, 3	3	--	--
Right Rear Window Switch B+	1, 2, 4	4	--	--
Driver Window Motor Down Control	B316B 02	1	1	--
Driver Window Motor Express Control	B316B 02	1	1	--
Driver Window Motor Up Control	B316B 02	1	1	--
Left Rear Window Motor Control	3	3	3	--
Passenger Window Motor Control	2	2	2	--
Right Rear Window Motor Control	4	4	4	--
Driver Window Switch Ground	--	1	--	--
Driver Window Motor Ground	--	U1534 00	--	--
Left Rear Window Switch Ground	--	3	--	--
Passenger Window Switch Ground	--	2	--	--
Right Rear Window Switch Ground	--	4	--	--

1. Driver Window Malfunction

2. Passenger Window Malfunction

3. Left Rear Window Malfunction

4. Right Rear Window Malfunction

Circuit/System Description

The window motors are supplied with B+ voltage which is used to power the motor and also used as a reference voltage within the logic circuit. When the driver or passenger window switch is pressed, a switch is closed causing the reference voltage in the appropriate circuit in the window motor to drop, the window motor responds by moving the window in the direction commanded.

Diagnostic Aids

The loss of the express up and express down functions for the driver window may have occurred for the following reasons:

- The battery was disconnected
- The battery was replaced
- The door wiring harness was disconnected
- The window motor was disconnected

The driver window motor will need to be normalised in order to restore the express functions, refer to Window Motor Programming - Express Function for the proper procedure.

Reference Information

Schematic Reference

Moveable Window Schematics

Connector End View Reference

Component Connector End Views

Description and Operation

Power Windows Description and Operation

Electrical Information Reference

- Circuit Testing

- Connector Repairs
- Testing for Intermittent Conditions and Poor Connections
- Wiring Repairs

Scan Tool Reference

Control Module References for scan tool information

Circuit/System Verification

1. Vehicle in Service Mode, command the M74D window motor-driver UP, DOWN, express UP and express DOWN with a scan tool. The M74D window motor--driver should perform the UP, DOWN, express UP and express DOWN commands.
   If the M74D window motor--driver does perform as specified, refer to Driver Window Motor Malfunction.
2. Command the M74D window motor--driver UP, DOWN, express UP and express DOWN by using the S79D window switch-driver. The M74D window motor--driver should perform the UP, DOWN, express UP and express DOWN commands.
   If the M74D window motor-driver does perform as specified, refer to Driver Window Switch Malfunction.
3. Observe the scan tool Left Rear Main Control Down Switch, Left Rear Main Control Express Switch, Left Rear Main Control Up Switch, Right Rear Main Control Down Switch, Right Rear Main Control Express Switch, Right Rear Main Control Up Switch, Front Passenger Main Control Down Switch, Front Passenger Main Control Express Switch, and the Front Passenger Main Control Up Switch parameters while using the appropriate switches on the S79D window switch-driver. Each value should change from Inactive to Active as the switch is used.
   If the values do not change or if the value is No Communication, refer to Driver Window Switch Malfunction.
4. Command the passenger and rear windows UP and DOWN by using their respective S79 window switch, each window should perform the UP and DOWN functions from each switch.
   If a window does not perform as specified, refer to Passenger/Rear Window Malfunction.
5. Observe the scan tool Window Lockout Switch parameter while pressing the window lockout switch on the S79D window switch-driver, the value should change from Inactive to Active each time the switch is pressed.
   If the value does not change, replace the S79D window switch-driver.

Circuit/System Testing

Driver Window Motor Malfunction

1. Vehicle OFF, disconnect the harness connector at the M74D window motor-driver.
2. Test for less than 10 Ω between the ground circuit terminal 1 and ground.
   If greater than the specified range, test the ground circuit for an open/high resistance.
3. Vehicle in Service Mode, verify that a test lamp illuminates between the B+ circuit terminal 2 and ground.
   If the test lamp does not illuminate, test the B+ circuit for a short to ground or an open/high resistance.
4. Test for 5-10 V between the serial data circuit terminal 4 and ground.
   If greater than the specified range, test the serial data circuit for a short to voltage.

If less than the specified range, test the serial data circuit for a short to ground or an open/high resistance.

5. If all circuits test normal, test or replace the M74D window motor-driver.

Driver Power Window Switch Malfunction

1. Vehicle OFF, disconnect the harness connector at the S79D window switch-driver.
2. Test for less than 10 Ω between the ground circuit terminal 1 and ground.
   If greater than the specified range, test the ground circuit for and open/high resistance.
3. Vehicle in Service Mode, verify that a test lamp illuminates between the B+ circuit terminal 4 and ground.
   If the test lamp does not illuminate, test the B+ circuit for a short to ground or an open/high resistance.
4. Verify that the scan tool Driver Window Main Control Down Switch parameter is Inactive.
   If not the specified value, test the control circuit terminal 3 for a short to ground. If the circuit tests normal, test or replace the M74D window motor-driver.
5. Connect a 5 A fused jumper wire between the control circuit terminal 3 and ground, verify that the scan tool Driver Window Main Control Down Switch parameter is Active.
   If not the specified value, test the control circuit for a short to voltage or an open/high resistance. If the circuit tests normal, test or replace the M74D window motor-driver.
6. Verify that the scan tool Driver Window Main Control Up Switch parameter is Inactive.
   If not the specified value, test the control circuit terminal 6 for a short to ground. If the circuit tests normal, test or replace the M74D window motor-driver.
7. Connect a 5 A fused jumper wire between the control circuit terminal 6 and ground, verify that the scan tool Driver Window Main Control Up Switch parameter is Active.
   If not the specified value, test the control circuit for a short to voltage or an open/high resistance. If the circuit tests normal, test or replace the M74D window motor-driver.
8. Verify that the scan tool Driver Window Main Control Express Switch parameter is Inactive.
   If not the specified value, test the control circuit terminal 2 for a short to ground. If the circuit tests normal, test or replace the M74D window motor-driver.
9. Connect a 5 A fused jumper wire between the control circuit terminal 2 and ground, verify that the scan tool Driver Window Main Control Express Switch parameter is Active.
   If not the specified value, test the control circuit for a short to voltage or an open/high resistance. If the circuit tests normal, test or replace the M74D window motor-driver.
10. If all circuits test normal, test or replace the S79D window switch-driver.

Passenger/Rear Window Malfunction

1. Vehicle OFF, disconnect the harness connector at the appropriate S79 window switch.
2. Test for less than 10 Ω between the ground circuit terminal listed below and ground.
   - S79P window switch-passenger ground circuit terminal 1
   - S79LR window switch-left rear ground circuit terminal 3
   - S79LR window switch-left rear ground circuit terminal 5
   - S79RR window switch-right rear ground circuit terminal 5

   If greater than the specified range, test the ground circuit for an open/high resistance.

3. Vehicle in Service Mode, verify that a test lamp illuminates between the B+ circuit terminal listed below and ground.
   - S79P window switch-passenger B+ circuit terminal 4
   - S79LR window switch-left rear B+ circuit terminal 8
   - S79RR window switch-right rear B+ circuit terminal 8

   If the test lamp does not illuminate, test the ground circuit for a short to ground or an open/high resistance.
4. Test for 5-10 V between the serial data circuit terminal listed below and ground.
   - S79P window switch-passenger serial data circuit terminal 5
   - S79LR window switch-left rear serial data circuit terminal 1
   - S79RR window switch-right rear serial data circuit terminal 1

   If greater than the specified range, test the serial data circuit for a short to voltage.

   If less than the specified range, test the serial data circuit for a short to ground or an open/high resistance.
5. Vehicle OFF, connect the harness connector at the S79 window switch and disconnect the harness connector at the appropriate M74 window motor.
6. Test for less than 15 Ω between the control circuit terminal A and ground.
   If greater than the specified range, test the control circuit for a short to voltage or an open/high resistance. If the circuit tests normal, replace the appropriate S79 window switch.
7. Test for less than 15 Ω between the control circuit terminal B and ground.
   If greater than the specified range, test the control circuit for a short to voltage or an open/high resistance. If the circuit tests normal, replace the appropriate S79 window switch.
8. Connect a test lamp between the control circuit terminal A and control circuit terminal B.
9. Vehicle in Service Mode, command the M74 window motor UP and DOWN by using the S79 window switch. The test lamp should briefly illuminate during the UP and DOWN commands.
   If the test lamp does not illuminate during the UP or DOWN command, test either control circuit for a short to ground. If the circuits tests normal, replace the S79 window switch.
10. If all circuits test normal, test or replace the M74 window motor.

Component Testing

Passenger/Rear Window Motor

1. Vehicle OFF, disconnect the harness connector at the appropriate M74 window motor.
2. Install a 25 A fused jumper wire between one of the control terminals and 12 V. Momentarily install a jumper wire between the other control terminal and ground. Reverse the jumper wires at least two times, the M74 window motor should perform the UP and DOWN functions.
   If it does not perform as specified, replace the M74 window motor.

Repair Instructions

Perform the Diagnostic Repair Verification after completing the diagnostic procedure.

- Front Side Door Window Switch Replacement
- Front Side Door Window and Multifunction Switch Replacement
- Rear Side Door Window Switch Replacement
- Front Side Door Window Regulator Motor Replacement
- Rear Side Door Window Regulator Motor Replacement

&#169© Copyright Chevrolet. All rights reserved

Side Door Window Mechanical Diagnosis

Cause	Correction
DEFINITION: A mechanical condition that requires a correction for proper operation of the side door window. Refer to Symptoms - Fixed and Moveable Windows prior to beginning this table.	
Intermittent Operation	Check proper glass alignment/attachment and door seal installation.
	Check switch and switch bezel to see if sticking.
	Check wire harness for pinched/shorted wire.
	THIS STEP APPLIES TO ALL TWO PIN MOTOR CONNECTORS ONLY. Perform electrical diagnostics, by first applying 12 volt power supply to the regulator motor to verify motor function.
Glass Binds	Check proper glass alignment/attachment.
	Check for defective seal and/or proper seal installation.
	Check for debris in glass run channel.
	Check for glass run channel position.
Regulator/Glass Rattles	Check for loose fasteners and retorque if required.
	Check that the glass is in the channel and reinstall if not positioned correctly.
Noisy Operation	Check for other components in the glass path such as wire harness, impact foam, lock rods, or cables.
	Check for proper glass alignment/attachment and door seal installation.
Windnoise	Check seals, mirror patch, and glass alignment.
False glass reversal, the glass goes down unexpectedly.	Check seals, reinitialise the glass and/or realign the glass.
	Check for debris in the glass run channel.

© Copyright Chevrolet. All rights reserved

Windscreen Replacement

Special Tools

- *BO-641* Suction Holder
- *BO-46974* Glass Removal System
- Use an adhesive that is approved by GM

For equivalent regional tools, refer to Special Tools .

Warning: Refer to Cracked Window Warning in the Preface section.

Warning: Refer to Glass and Sheet Metal Handling Warning in the Preface section.

1. Open the bonnet.
2. Remove the windscreen wiper arms and blades. Refer to Windscreen Wiper Arm Replacement : Passenger → Driver .
3. Remove the air inlet grille panel. Refer to Air Inlet Grille Panel Replacement .
4. Remove the left and right side corner weatherstrip by the air inlet panel.
5. Remove the left and right windscreen side garnish moldings. Refer to Windscreen Side Garnish Molding Replacement .
6. Remove the rearview mirror. Refer to Inside Rearview Mirror Replacement .
7. Disconnect the rain sensor connector, if equipped.

   Warning: If broken glass falls into the defroster outlets, it can be blown into the passenger compartment and cause personal injury.

8. Cover to protect the following parts from broken glass:
   - Upper dash pad
   - Demister outlets and A/C outlets
   - Seats and carpeting

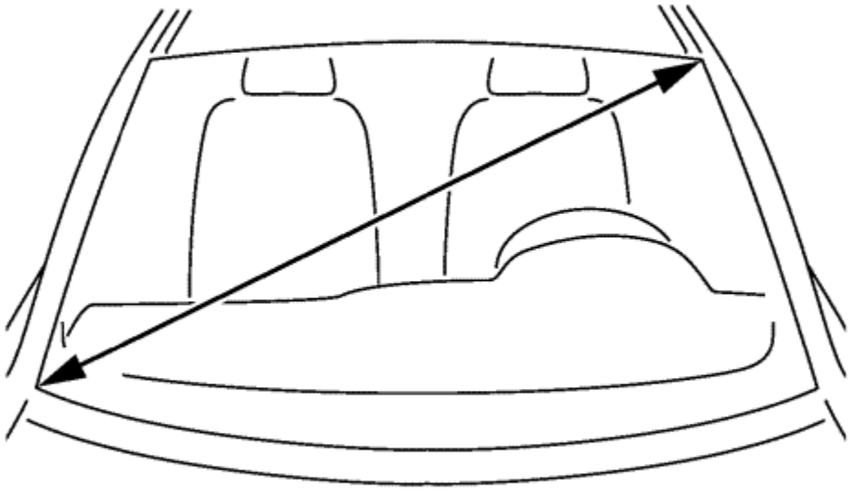

⇩

9. Use *BO-46974* system .
10. Take the diagonal measurement of the windscreen.
11. Cut cutting wire into four times lengths.

    Approx. **5200 mm (204.724 in)**, the circumference of the corresponding role of wire is approx. **1000 mm (39.369 in)**

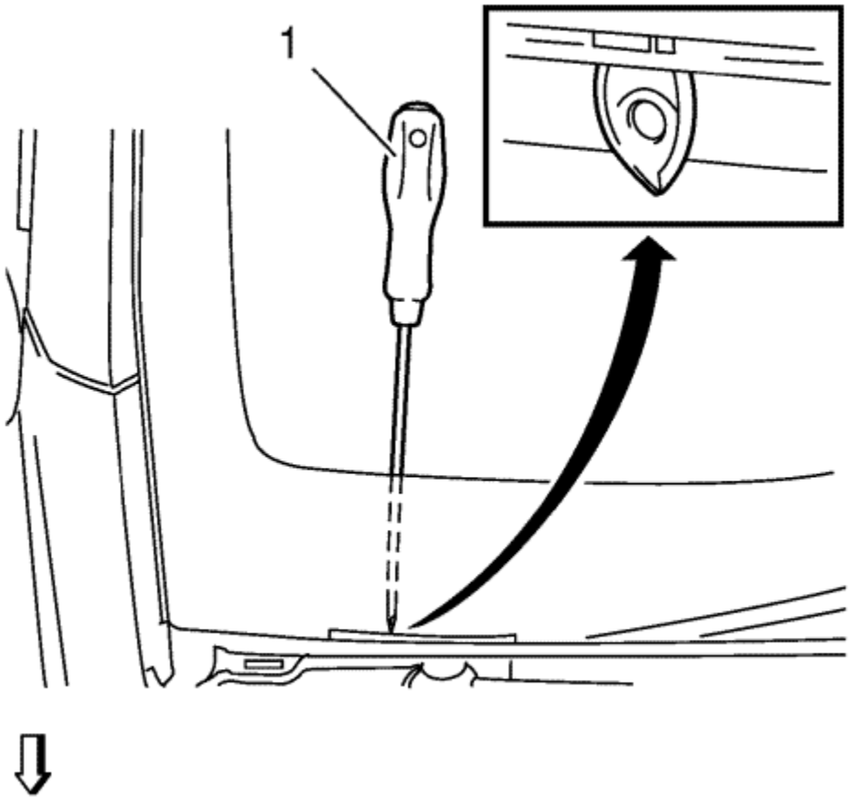

12. Heat the awl with a suitable tool.

    Note: Ensure that the windscreen is not damaged in the process, otherwise stress cracks in the windscreen may occur.

13. Stick the awl (1) with adhesive bed in the area of the front wall.
14. Pull the wire through.
    14.1. Thread the cutting wire into the hole of the awl and bend the end over.
    14.2. Pull the cutting wire with the awl to the middle of the steering wheel in the interior.

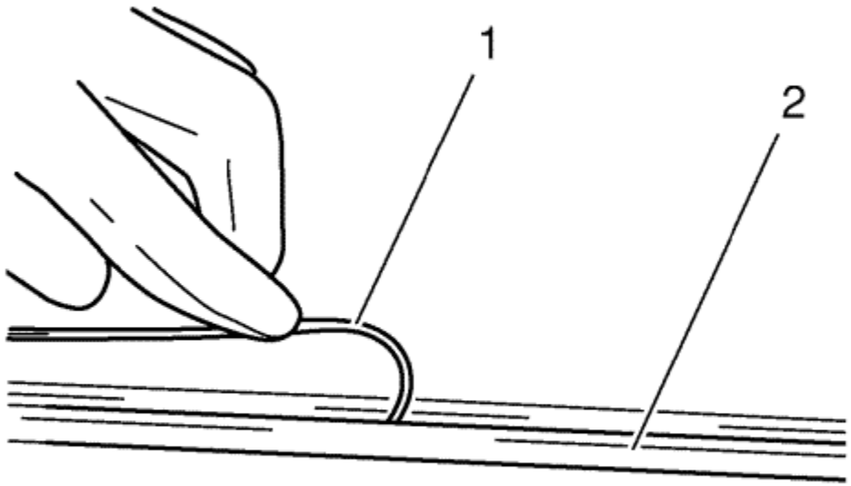

Note: The cutting wire (1) should be rolled in beneath the rubber window seal (2) at the windscreen.

15. Lay the wire under the windscreen all the way around.

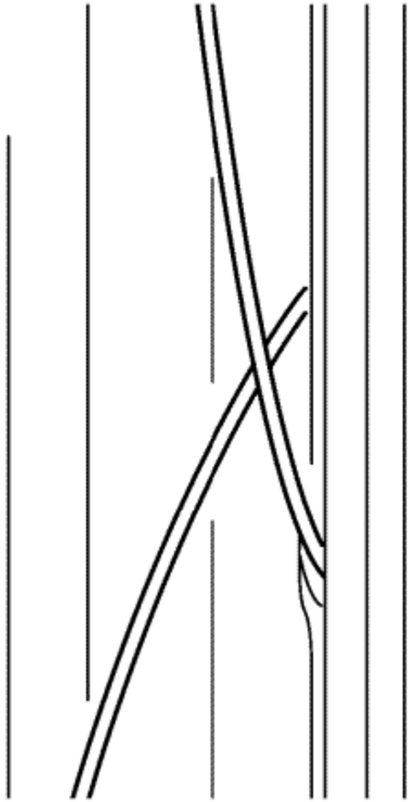

16. Pull the second wire end through.
    16.1. Stick awl approx. **10 mm (0.393 in)**, overlapping the first entry place with adhesive bed.
    16.2. Thread the cutting wire into the hole of the awl and bend it over.
    16.3. Pull the rest of the wire into the interior using the awl.

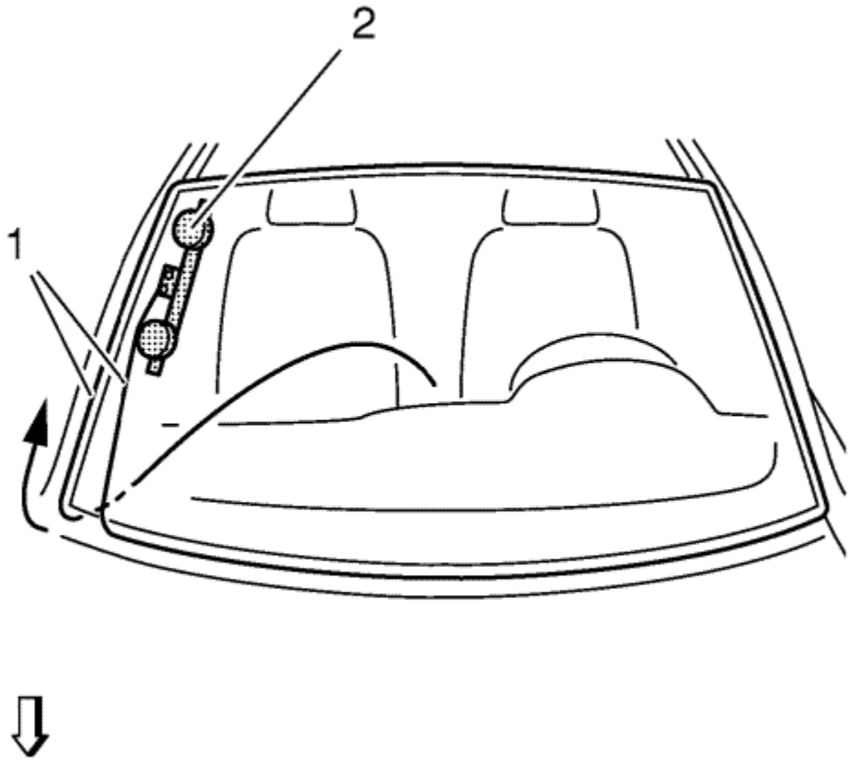

Note: Ensure that the cutting wire is fitted correctly to the winch deflection roller.

17. Place the winch with two winding heads (2) on windscreen inside.
18. Position the winch in the right hand area of the windscreen inside.
19. Attach the cutting wire to the winch.

Note: In the area of the A-pillar/front wall, increased cutting effort is necessary. Arrow shows the path of cutting wire (1).

20. Cut out the windscreen.
    20.1. Use the plastic sheet in order to protect the instrument panel assembly.
    20.2. Insert transfer ratchet and apply tension to the cutting wire.
    20.3. Cut out the windscreen until the cutting wire is on the same level with the winch.

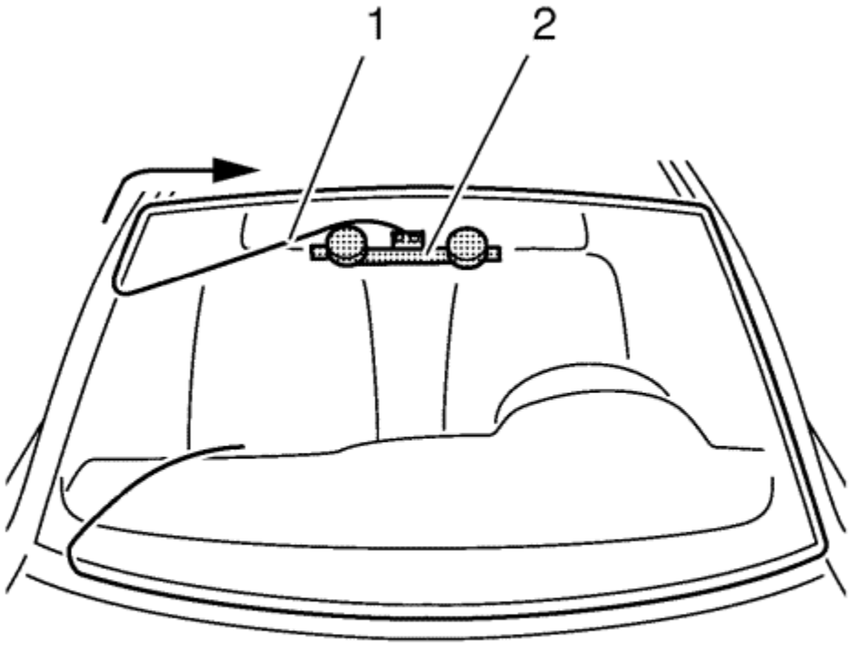

Note: Ensure that the cutting wire is fitted correctly to the winch deflection roller.

21. Place the winch with two winding heads (2) on the inside of the windscreen near to the interior rear view mirror.
22. Insert the transfer ratchet and apply tension to the cutting wire.

Note: In the area of the A-pillar/roof frame, increased cutting effort is necessary. Arrow shows the path of the cutting wire (1).

23. Cut out the windscreen.
    23.1. Use the hold-down positioner and the plastic sheet to protect the sunroof.
    23.2. Cut out the windscreen until the cutting wire is on the same level with the winch.

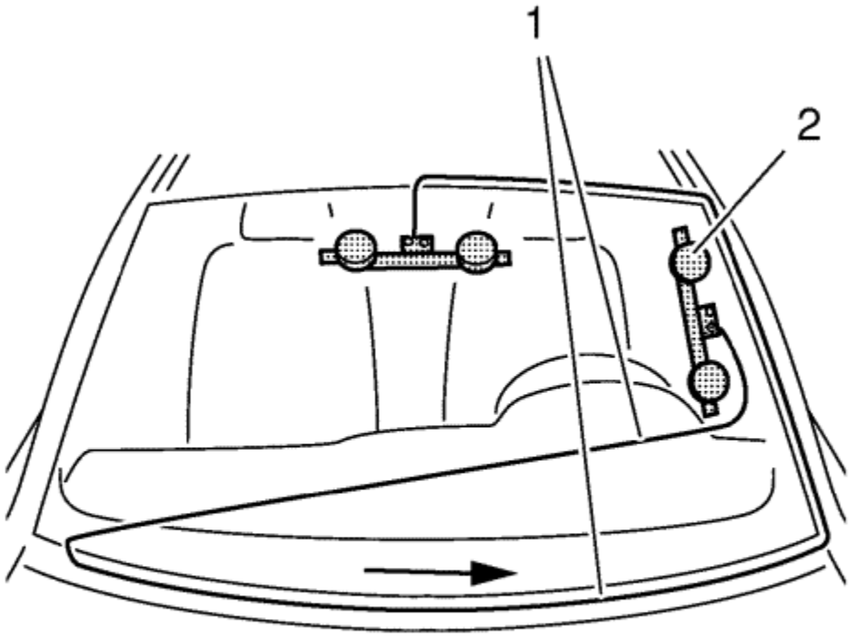

Note: Ensure that the cutting wire is fitted correctly to the winch deflection roller.

24. Place the winch with one winding head (2) on the inside the windscreen in the position of the A-pillar an the driver side.
25. Attach the cutting wire (1) to the winch.
26. Insert transfer ratchet and apply tension to the cutting wire.

Note: Use lubricant on the winch deflection roller. In the area of the A-pillar/bulkhead, increased cutting effort is necessary. Arrow shows the path of cutting wire (1).

27. Cut out the windscreen.
    27.1. Cut out the windscreen until the cutting wire is on the same level with the winch.
    27.2. Use the plastic sheet in order to protect the instrument panel assembly.

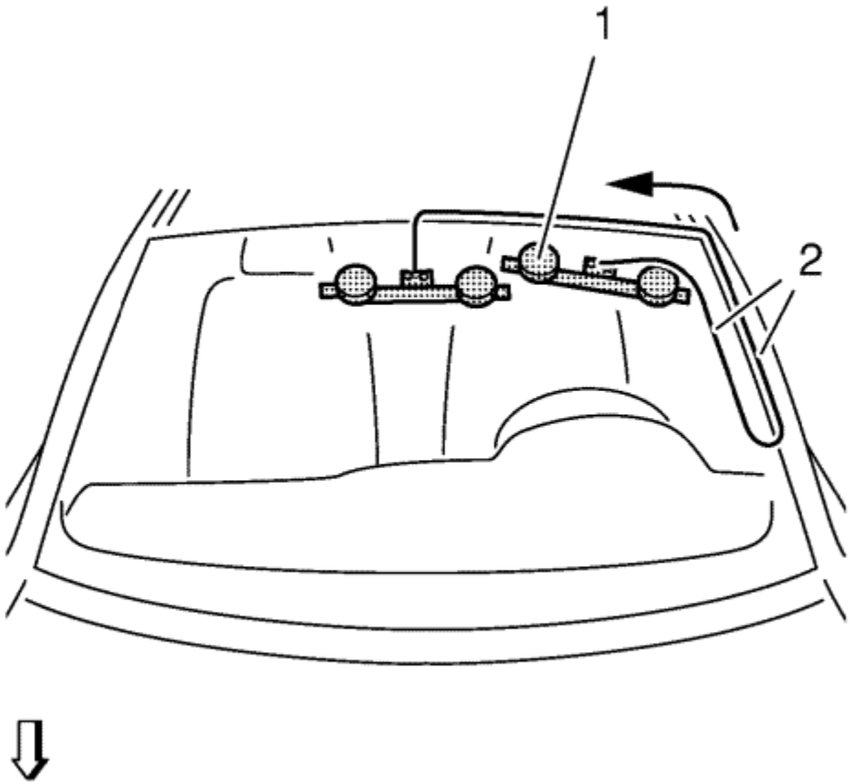

Note: Ensure that the cutting wire is fitted correctly to the winch deflection roller.

28. Place the winch with one winding head (1) on the inside of the windscreen in the area of the roof frame (1).
29. Insert the transfer ratchet and apply tension to the cutting wire.

Note: Use lubricant on the winch deflection roller. In the area of the A-pillar/roof frame, increased cutting effort is necessary. Arrow shows the path of cutting wire (2).

30. Cut out the windscreen.
    30.1. Cut out the windscreen until the cutting wire is on the same level with the winch.
    30.2. Use the plastic sheet in order to protect the headlining trim panel.

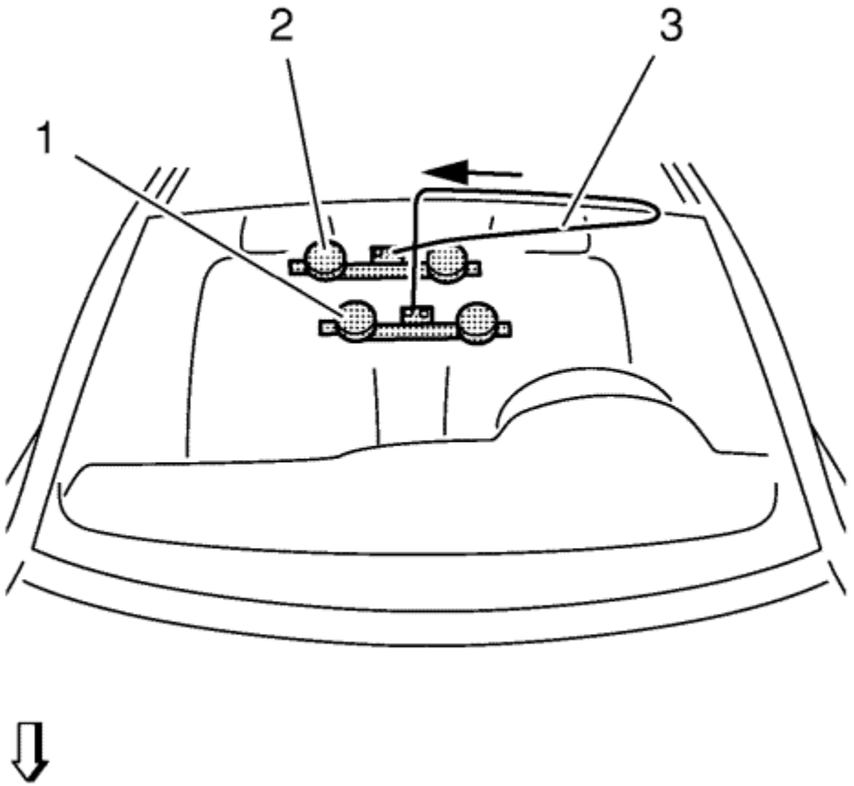

31. Position both cutting tools.
32. Shift the winch (1) with two winding heads downwards
33. Shift the winch with one winding head (2) in the headlining area so that the cutting wire (3) is crossed.
34. Insert the transfer ratchet and apply tension to the cutting wire.

    Note: Arrow shows the path of cutting wire (3).

35. Cut out the windscreen.
    35.1. Cut out windscreen until the cutting wire has cut through the adhesive bed completely.
    35.2. Use the plastic sheet in order to protect the headlining trim panel.
36. Remove the glass removal system.
37. Install and lock the *BO-641* holder onto the windscreen.

    Note: A second technician is required.

38. Remove the windscreen from the vehicle.

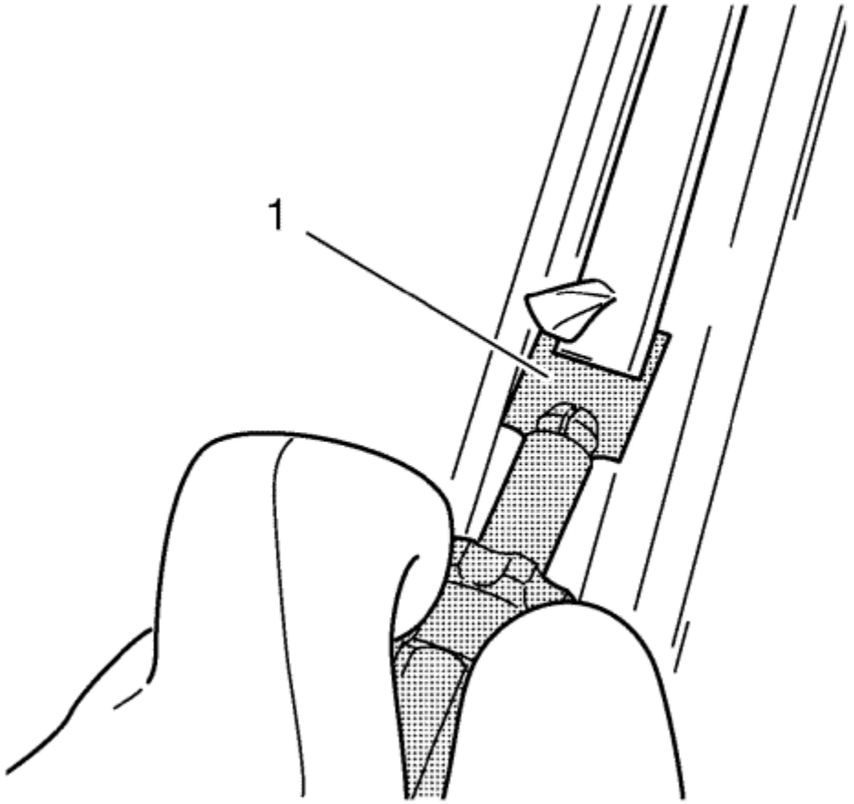

39. Cut the adhesive tape with the provided knife (1) within a depth of **1 mm (0.039 in)**.
40. Repair any paint damage, using a touch-up pen that matches the vehicle color.
41. Replace the windscreen rubber if damaged.
42. Cut the adhesive tape on the glass pane with the provided knife within a depth of **1 mm (0.039 in)**.

Installation Procedure

1. Remove all mounds or loose pieces of urethane adhesive from the pinch-weld area.
2. Inspect for any of the following conditions in order to help prevent future breakage of the window:
   - High weld
   - Solder spots
   - Hardened sealer
   - Any other obstruction or irregularity in the pinch-weld flange

3. After repairing the windscreen opening as indicated, remove all traces of broken glass from the outer cowl panel, seats, floor, and defroster ducts.

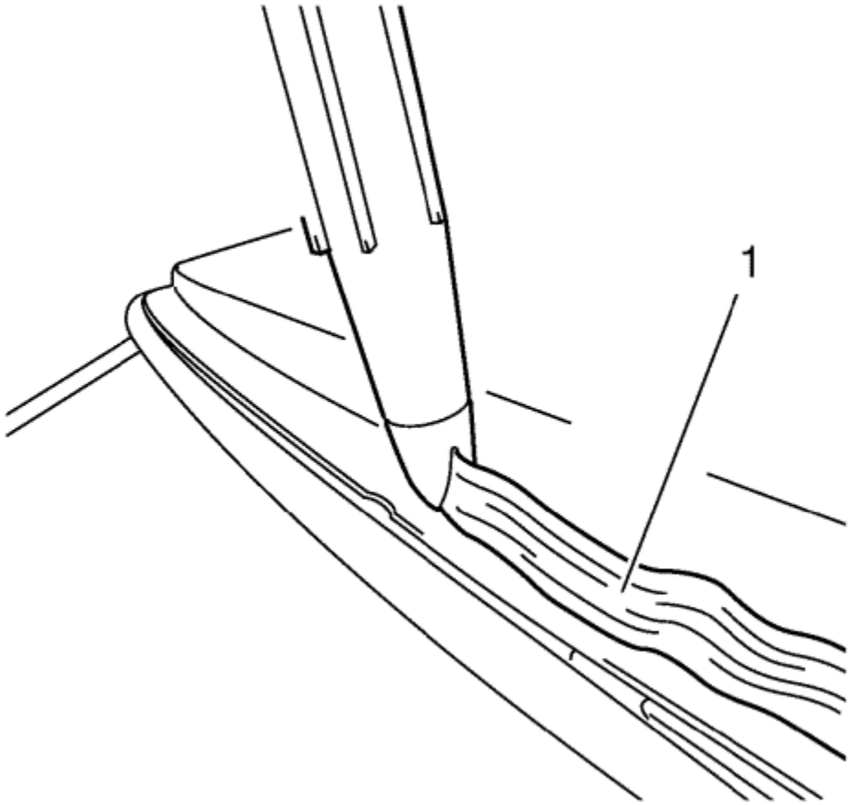

4. Apply an adhesive bead (1).

   Cut into the tip of the cartridge so that a bead of adhesive with a thickness approx. of **13 mm (0.511 in)** is produced.

   Note: A second technician is required.

5. Insert the windscreen.
   5.1. Insert windscreen, using the *BO-641* holder .
   5.2. Place the windscreen on the roof frames and lower it down.
6. Use fabric tape to secure the windscreen in position.
7. Remove any excessive urethane adhesive from the body, using a suitable cleaner.

   Note: A second technician is required.

8. Use a soft spray of warm water in order for a immediate water leak test.
9. Inspect the windscreen for leaks.
10. If any leaks are found, use a plastic paddle in order to apply extra urethane adhesive to the leak point.
11. Repeat the water leak test.
12. Maintain the following conditions in order to assure a proper cure of the urethane adhesive:
    12.1. Lower a door window partially in order to prevent pressure buildups when closing the doors before the adhesive is cured.
    12.2. DO NOT drive the vehicle until the adhesive is cured. Refer to the above curing times.
    12.3. DO NOT use compressed air to dry the adhesive.
13. Install the air inlet grille panel. Refer to Air Inlet Grille Panel Replacement .
14. Install the windscreen wipers arms and blades. Refer to Windscreen Wiper Arm Replacement : Passenger → Driver .
15. Install the left and right windscreen garnish molding. Refer to Windscreen Side Garnish Molding Replacement .
16. Install the rearview mirror. Refer to Inside Rearview Mirror Replacement .
17. Connect the rain sensor connector, if equipped.
18. Remove the double layer of masking tape around the perimeter of the painted surfaces and the interior trim.
19. Close the bonnet.

&#169© Copyright Chevrolet. All rights reserved

Front Side Door Window Adjustment

Causes of Slow Moving Window

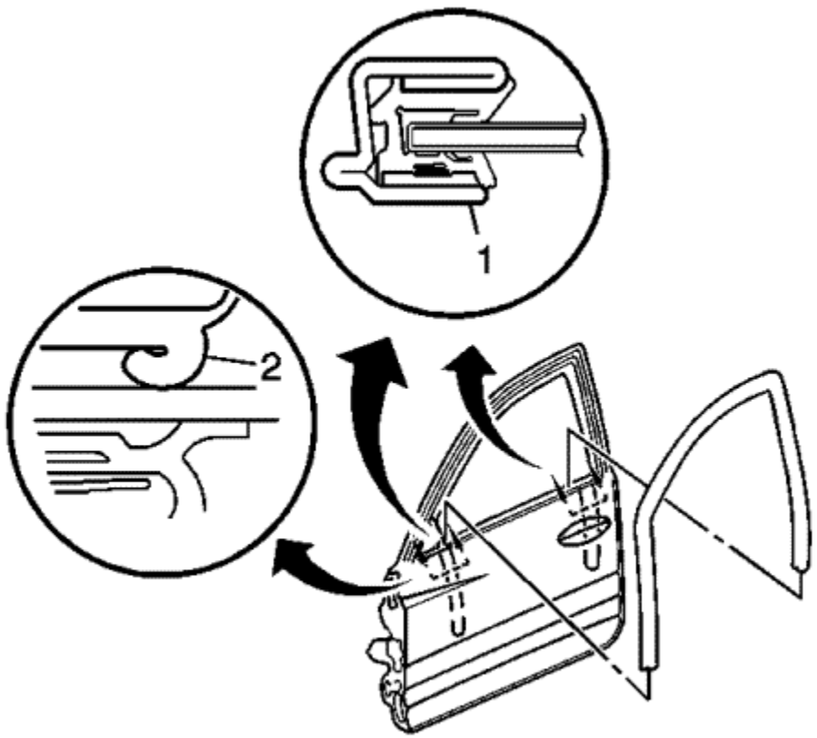

Warning: Disconnect the power window switch when working inside the driver door. When operated, the Express Up/Down Feature allows the door window to move very quickly, without stopping, which could cause personal injury.

Note: Owners may comment that the windows operate slowly when going up or down.

1. Listed below are conditions that may cause a slow moving window.
   - The window run channel outboard lip at the rearview mirror is rolled over or the window run channel outboard lip at the rear of door frame (2).
   - The window is not seated in the run channel.
   - The window is misaligned in the opening.
   - The regulator is misaligned causing misalignment of the window.
   - Inspect the power window motor for being loose.
2. After inspecting the conditions above, do the following:

   Remove the front door trim panel.

3. Remove the water deflector.
4. Ensure that the window guide is fully seated and clipped.
5. Ensure that the window is fully seated into the window guide run channel.
6. Inspect the window for equal distance between the front and rear run channels.

Adjustment Procedure

1. Inspect for the following conditions before making adjustments.
   - Using a flat-bladed tool, straighten the run channel lip by pulling it out to its correct position.
   - Use a flat-bladed tool to push the run channel rearward to seat it in the door frame.
   - Inspect the window guide retainer to window for the proper alignment to the slots in the window.
   - Inspect the window to be straight up and down position.

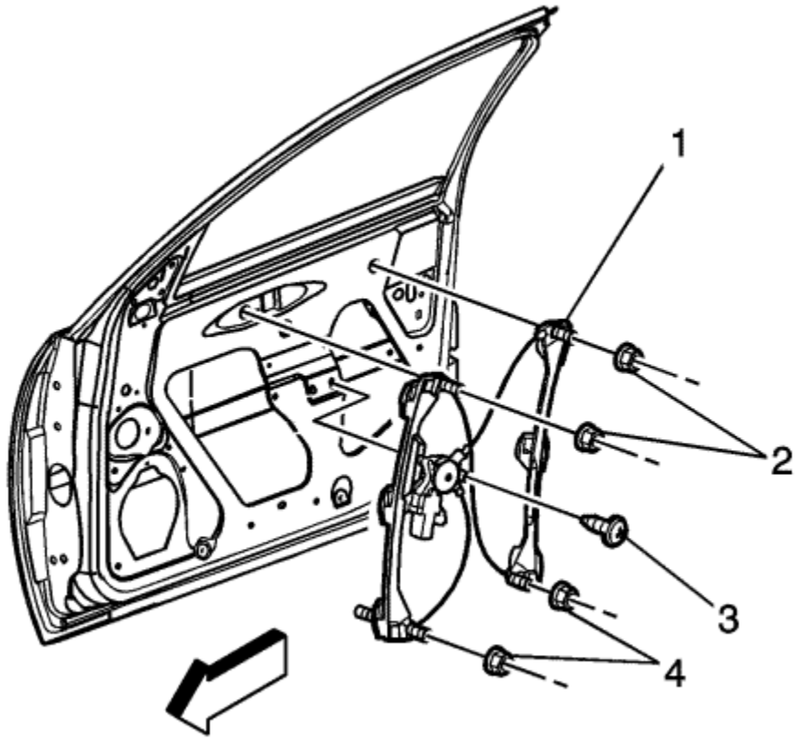

- Loosen the fasteners that attach the window regulator (1) to the inner door panel, in the specified sequence (2, 3, 4).

Caution: Refer to Fastener Caution in the Preface section.

2. Tighten the fasteners that attach the front side door window regulator (1) to the inner door panel in the specified sequence (2, 3, 4) to **11 N·m (97 lb in)**.
3. Inspect the window for proper operation.
4. Install the water deflector.
5. Install the front door trim panel.

&#169© Copyright Chevrolet. All rights reserved

Front Side Door Window Replacement

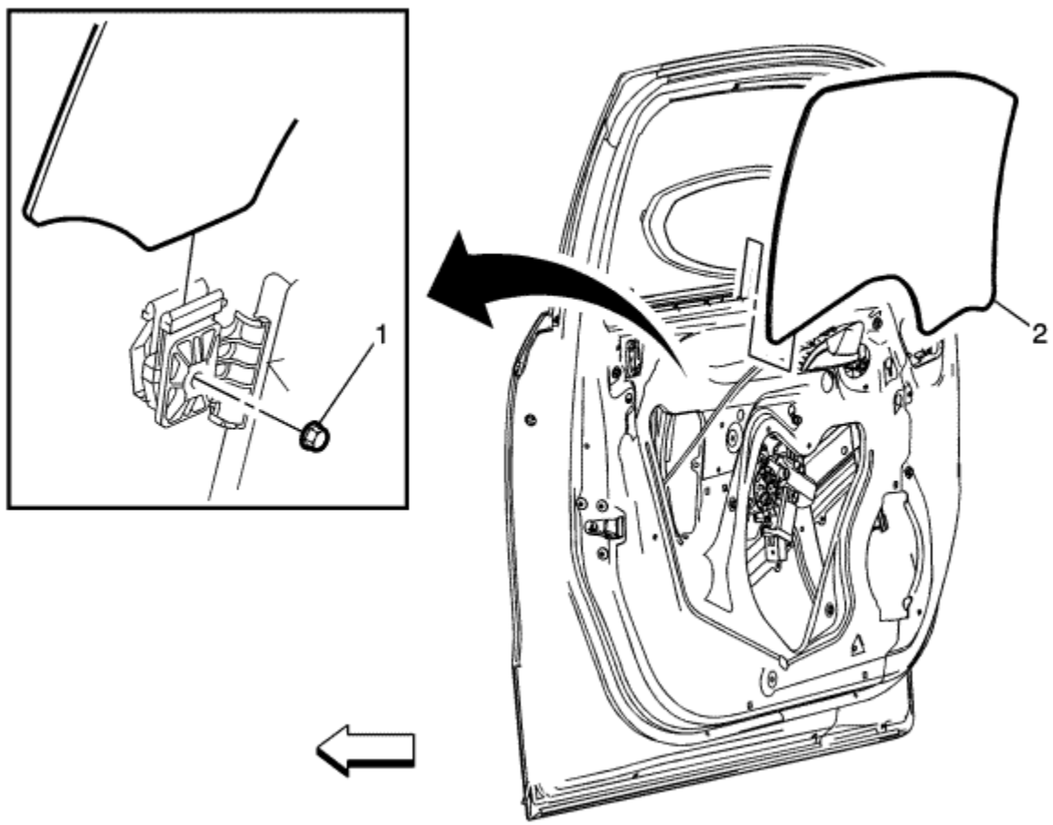

Callout	Component Name
Warning: Disconnect the power window switch when working inside the driver door. When operated, the Express Up/Down Feature allows the door window to move very quickly, without stopping, which could cause personal injury. **Caution:** Refer to Paint Damage Caution in the Preface section.	

Preliminary Procedures

1. Remove the front side door window front channel. Refer to Front Side Door Window Channel Replacement .
2. Remove the front side door window garnish molding. Refer to Front Side Door Window Garnish Molding Replacement .

1	Front Side Door Window Guide Retainer Nuts (Qty: 2) **Caution:** Refer to Fastener Caution in the Preface section. **Procedure** 1. Apply masking tape to the outer applique and frame. 2. Remove the door trim panel bracket. 3. Remove the water deflector. 4. Use masking tape to tape the window in the full up position to the door frame. 5. Loosen the window guide retainer nuts through the access holes in the door. 6. Lower the window regulator full down. 7. Remove the masking tape from the window. 8. Tilt the window downward in the front, pull up on the back of the window and pull it out from the frame. **Tighten** 10 N·m (89 lb in)
2	Front Side Door Window **Tip** Inspect the window for proper operation before installing the door trim panel.

© Copyright Chevrolet. All rights reserved

Rear Side Door Window Adjustment

Causes of Slow Moving Window

Note: Owners may comment that the windows operate slowly when going up or down.

1. Listed below are conditions that may cause a slow moving window:
   - The window run channel outboard lip at the rear of door frame.
   - The window is not seated in the run channel.
   - The window is misaligned in the opening.
   - The regulator is misaligned causing misalignment of the window.
2. After inspecting the conditions above, do the following:
   2.1. Remove the rear door trim panel.
   2.2. Remove the water deflector.
   2.3. Ensure that the window guide is fully seated and clipped.

   Ensure that the window is fully seated in the window guide run channel.

   2.4. Inspect the window for equal distance between the front and rear run channels.
   2.5. Inspect the power window motor for being loose.
   2.6. Inspect the window for alignment.

Adjustment Procedure

1. Remove the rear side door trim panel.

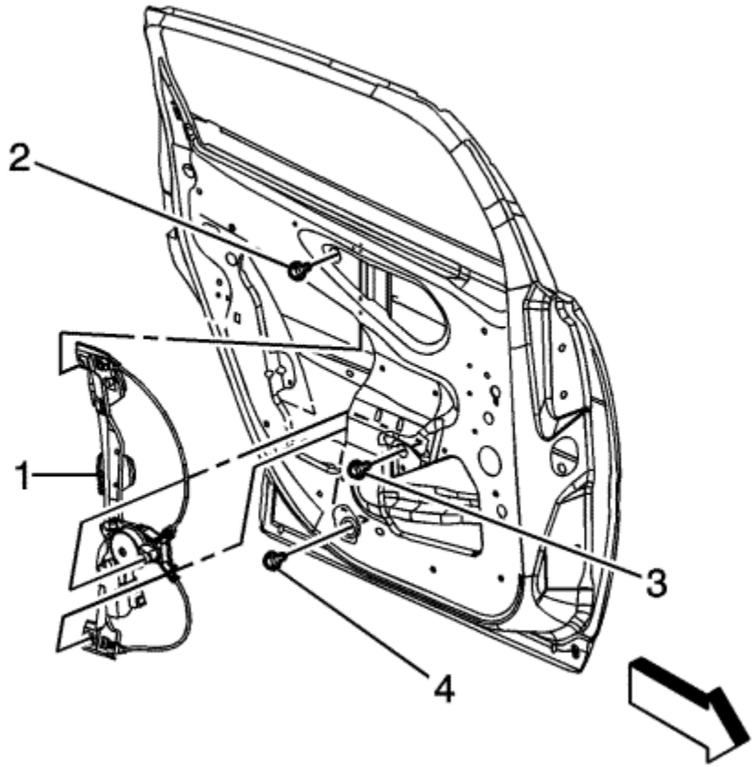

2. Inspect for the following conditions before making adjustments:
   - Using a flat-bladed tool, straighten the run channel lip by pulling it out to its correct position.
   - Use a flat-bladed tool to push the run channel rearward to seat it in the door frame.
   - Inspect the window guide channel to window fasteners to ensure that they are in the proper slots and the window is not tilted forward.
   - Inspect the window to be straight up and down position.
   - Loosen the fasteners that attach the window regulator (1) to the inner door panel, in the specified sequence (2, 3, 4).

   Caution: Refer to Fastener Caution in the Preface section.

3. Loosen the fasteners that attach the rear side door window regulator (1) to the inner door panel in the specified sequence (2, 3, 4).

   Tighten the fasteners to **11 N·m (97 lb in)**.

4. Inspect the window for proper operation.
5. Install the water deflector.
6. Install the rear door trim panel.

&#169© Copyright Chevrolet. All rights reserved

Rear Side Door Window Replacement

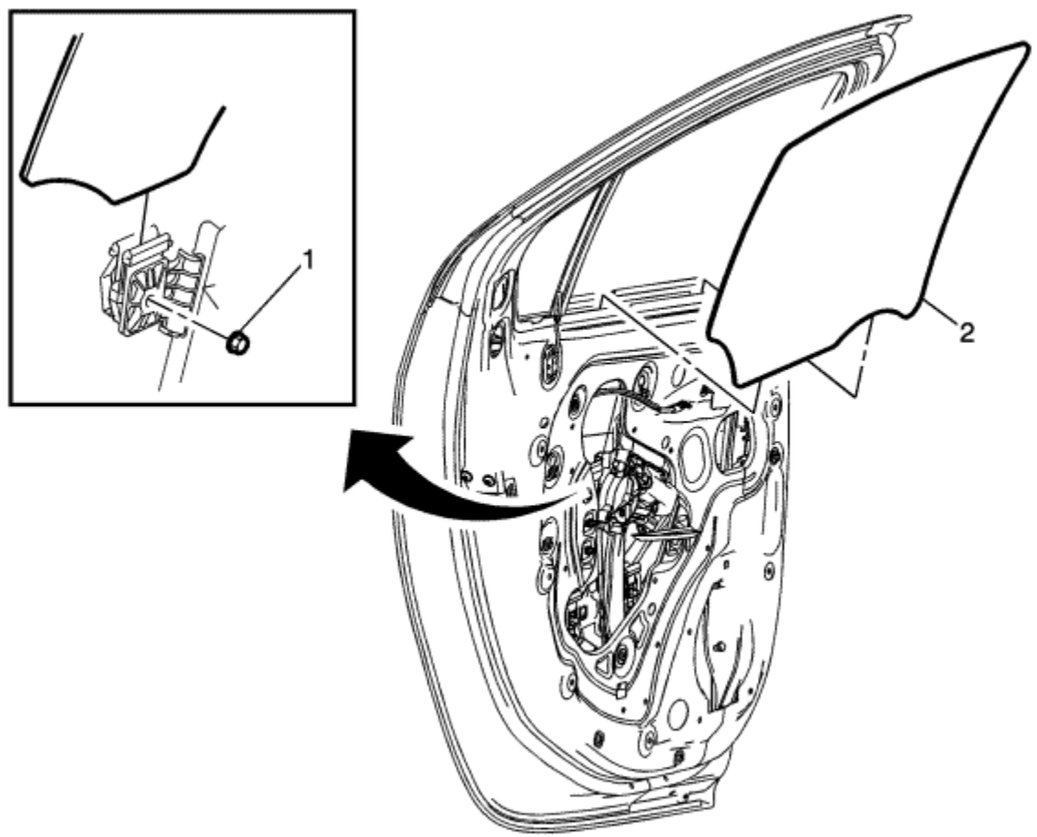

Callout	Component Name
Warning: Disconnect the power window switch when working inside the driver door. When operated, the Express Up/Down Feature allows the door window to move very quickly, without stopping, which could cause personal injury. **Caution:** Refer to Paint Damage Caution in the Preface section.	

Preliminary Procedures

1. Place the window in the full up position.
2. Remove the rear side door window rear channel. Refer to Rear Side Door Window Rear Channel Replacement .
3. Remove the rear side door window upper garnish molding. Refer to Rear Side Door Window Garnish Molding Replacement .

1	Rear Side Door Window Guide Nuts (Qty: 2) **Caution:** Refer to Fastener Caution in the Preface section. **Procedure** 1. Use masking tape to tape the window in the full up position to the door frame. 2. Remove the door trim panel bracket. 3. Remove the water deflector. 4. Loosen the window guide retainer nuts through the access holes in the door. 5. Lower the window regulator full down. 6. Remove the masking tape from the window. 7. Slide the window down in the door until the window is free from the rear window channel. **Tighten** 10 N·m (89 lb in)
2	Rear Side Door Window **Tip** Inspect the window for proper operation before install the door trim panel.

© Copyright Chevrolet. All rights reserved

Tailgate Upper Window Replacement

Special Tools

- *BO-641* Suction Holder
- *BO-46974* Glass Removal System
- Use an adhesive that is approved by GM

For equivalent regional tools, refer to Special Tools .

Removal Procedure

Warning: Refer to Cracked Window Warning in the Preface section.

Warning: Refer to Glass and Sheet Metal Handling Warning in the Preface section.

1. Position the vehicle on level ground and move the front wheels to the straight-ahead position.
2. Open the tailgate.
3. Remove the tailgate lower trim finish panel. Refer to Tailgate Lower Trim Finish Panel Replacement .
4. Disconnect the electrical connectors from the tailgate window demister bus bar.
5. Remove the rear end spoiler. Refer to Rear End Spoiler Replacement .

   Warning: Refer to Defroster Outlet Warning in the Preface section.

6. Cover the following parts to protect from broken glass:
   - Upper dash pad
   - Seats and carpeting

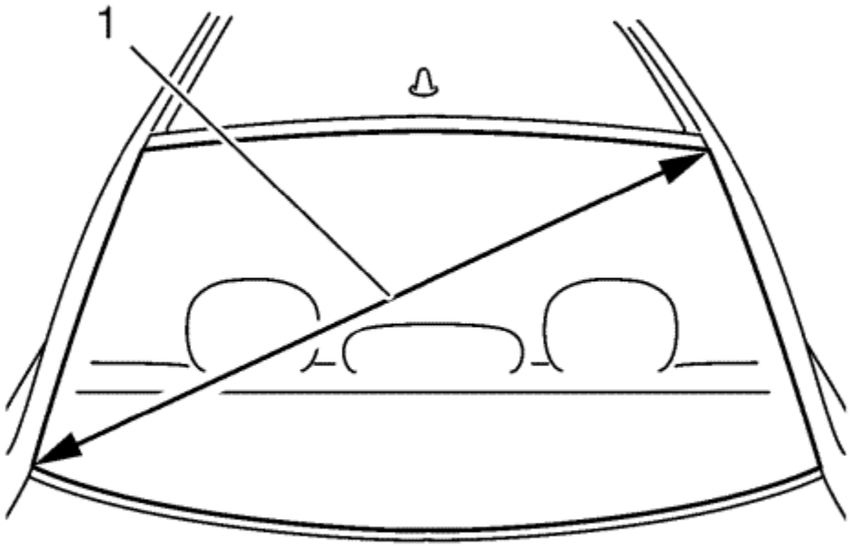

7. Use *BO-46974* system .
8. Take the diagonal measurement (1) of the tailgate window.
9. Cut cutting wire into four times lengths.

   Approx. **5200 mm (204.724 in)**, the circumference of the corresponding role of wire is approx. **1000 mm (39.369 in)**

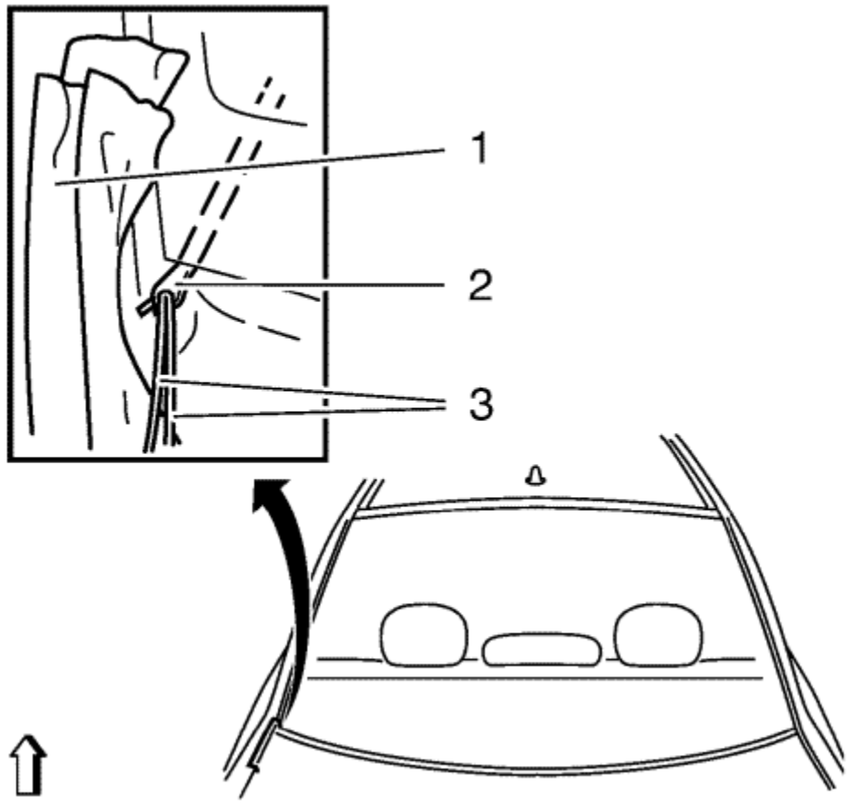

10. Heat the awl with a suitable tool.

    Note: Ensure that the tailgate window is not damaged in the process. Otherwise, stress cracks could form in the tailgate window. Mask off the area with fabric tape (1).

11. Stick the awl through the adhesive bed in the area of the lower C-pillar.
12. Pull the wire through.
    12.1. Thread both ends of the cutting wire (3) in the bores of the piercing awl (2) and bend them over.
    12.2. Use the piercing awl (2) to pull the cutting wire to the centre of the tailgate window.

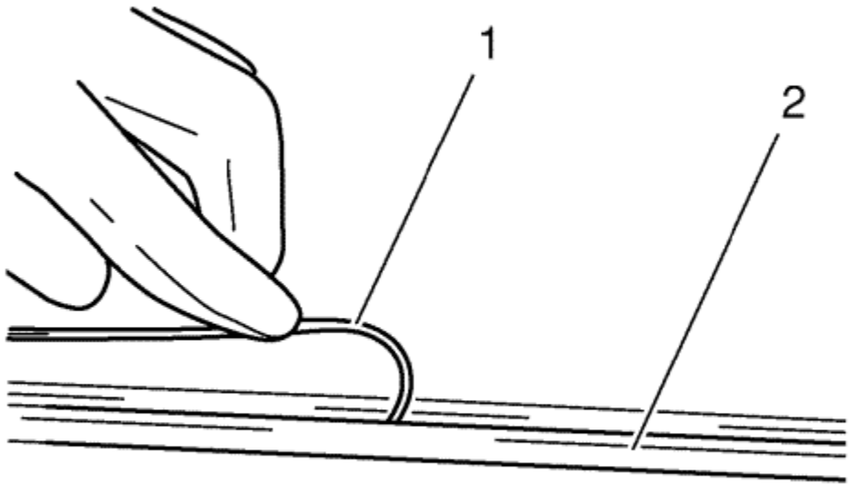

Note: The cutting wire (1) should be rolled in beneath the rubber window seal (2) at the tailgate window.

13. Lay the wire under the tailgate window all the way around.
14. Pull the remaining wire into the interior.

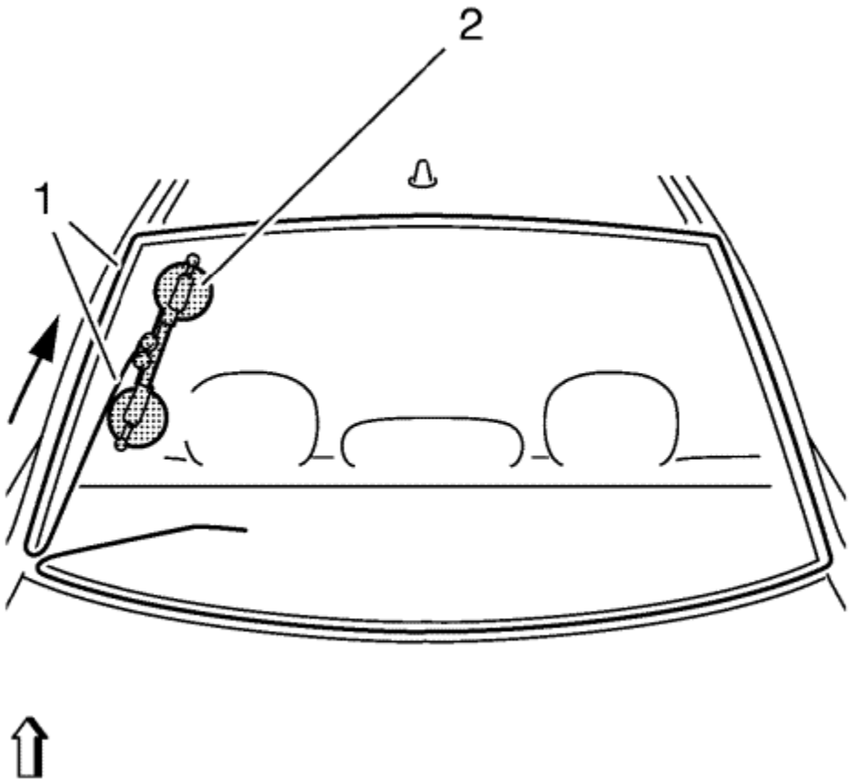

Note: Ensure that the cutting wire (1) is fitted correctly to the winch deflection roller.

15. Place the winch (2) with two winding heads on the tailgate window inside.
16. Position the winch vertically at the same height as the C-pillar.
17. Attach the cutting wire (1) to the winch (2).
18. Insert transfer ratchet and apply tension to the cutting wire.

Note: Arrow shows the path of the cutting wire (1).

19. Cut out the tailgate window until the cutting wire (1) is on the same level with the winch.

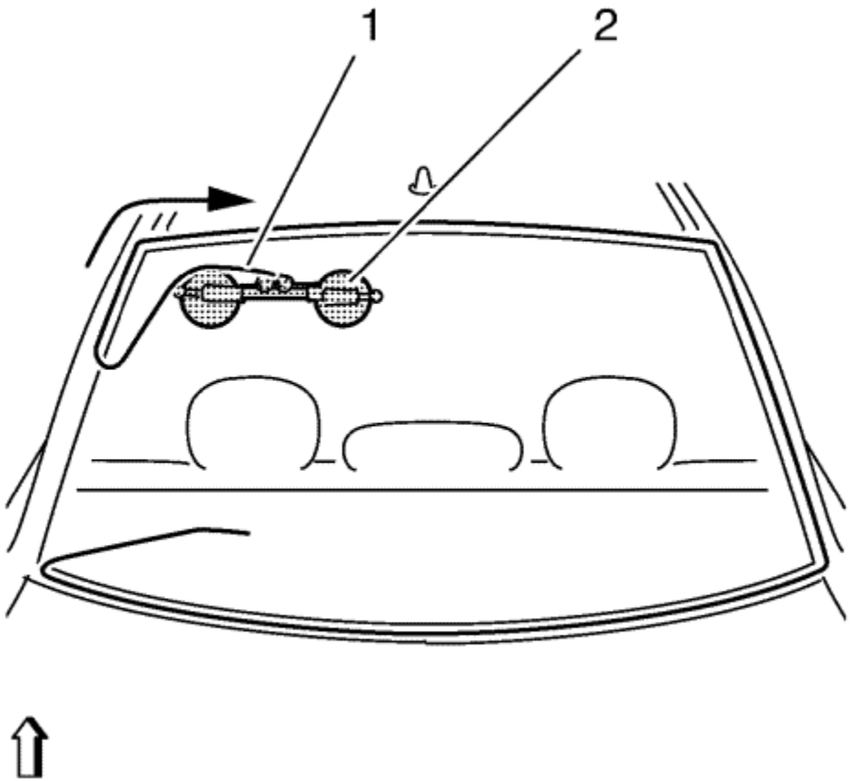

Note: Ensure that the cutting wire (1) is fitted correctly to the winch deflection roller.

20. Place the winch (2) with two winding heads on the inside of the tailgate window, in the area of the roof frame.
21. Insert transfer ratchet and apply tension to the cutting wire.

Note: In the area of the tailgate window radius, increased cutting effort is necessary. Arrow shows the path of the cutting wire (1).

22. Cut out the tailgate window until the cutting wire is on the same level with the winch.

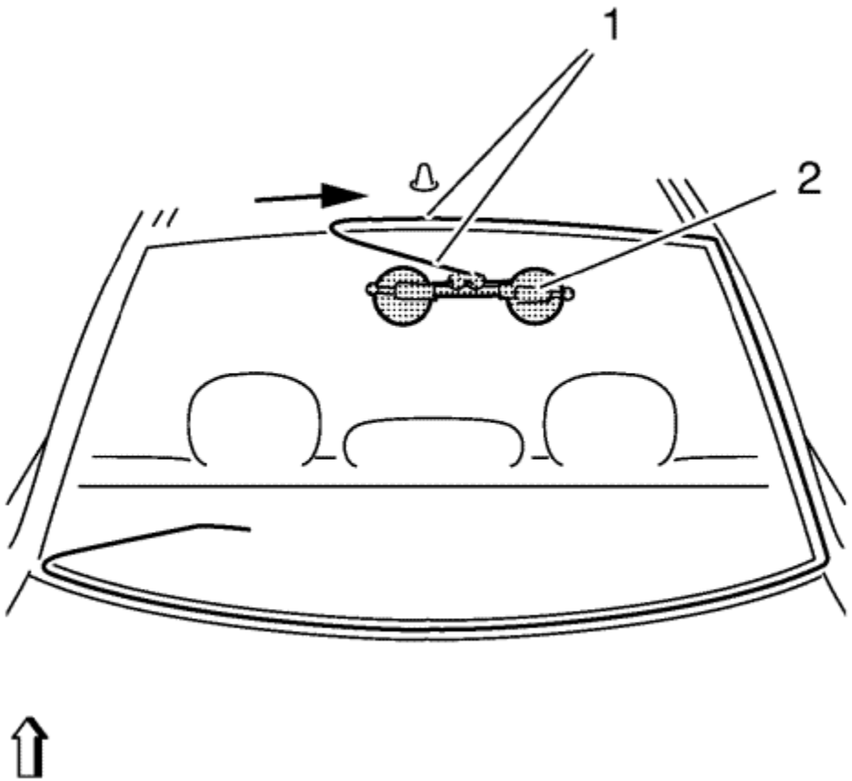

Note: Ensure that the cutting wire (1) is fitted correctly to the winch deflection roller.

23. Place the winch (2) with two winding heads on the inside of the tailgate window, in the centre area of the tailgate window.
24. Insert transfer ratchet and apply tension to the cutting wire.

Note: Arrow shows the path of the cutting wire (1).

25. Cut out the tailgate window until the cutting wire is on the same level with the winch.

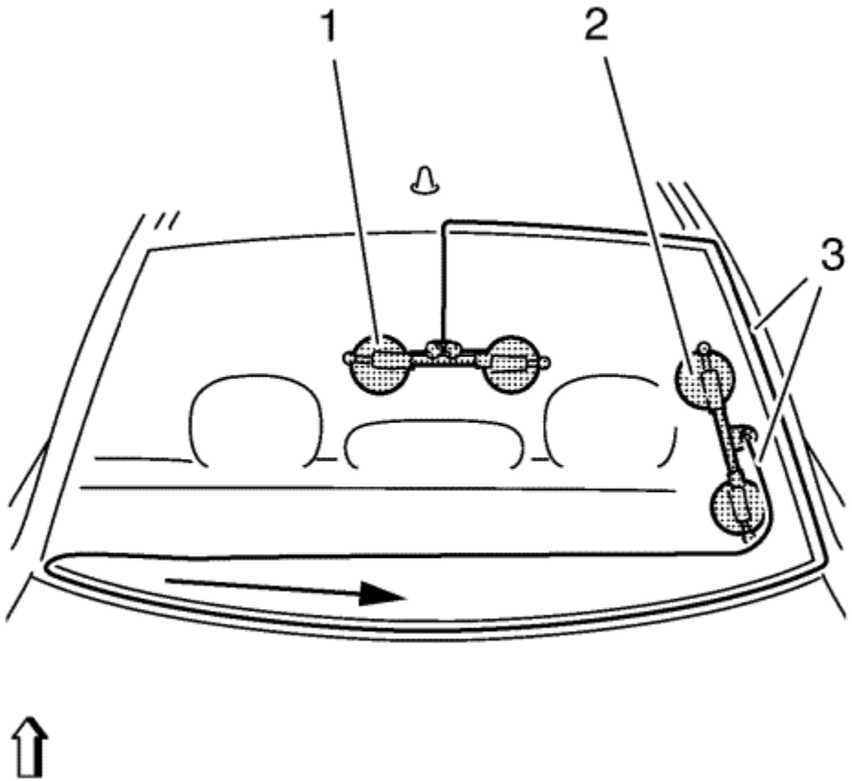

Note: Ensure that the cutting wire (1) is fitted correctly to the winch deflection roller.

26. Place the winch (2) with one winding heads on the inside of the tailgate window, in the area of the lower C-pillar.
27. The winch (1) with 2 winding heads remains in the position.
28. Insert transfer ratchet and apply tension to the cutting wire.

Note: In the area of the tailgate window radius, increased cutting effort is necessary. Arrow shows the path of the cutting wire (1).

29. Cut out the tailgate window until the cutting wire is on the same level with the winch.

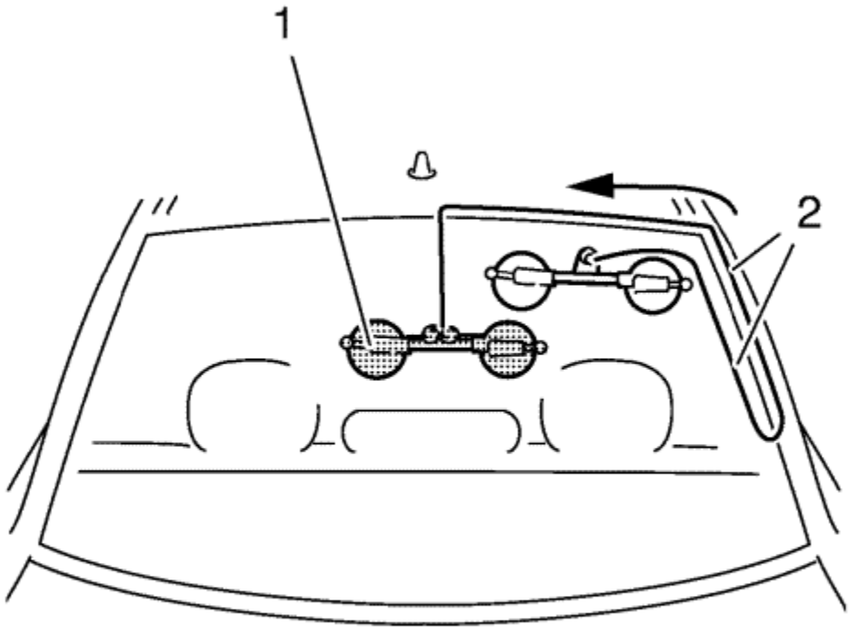

Note: Ensure that the cutting wire (2) is fitted correctly to the winch deflection roller.

30. Place the winch with one winding head on the inside of the tailgate window, in the area of the lower C-pillar.
31. The winch (1) with 2 winding heads remains in the position.
32. Insert transfer ratchet and apply tension to the cutting wire.

Note: In the area of the tailgate window radius, increased cutting effort is necessary. Arrow shows the path of the cutting wire (1).

33. Cut out the tailgate window until the cutting wire is on the same level with the winch.

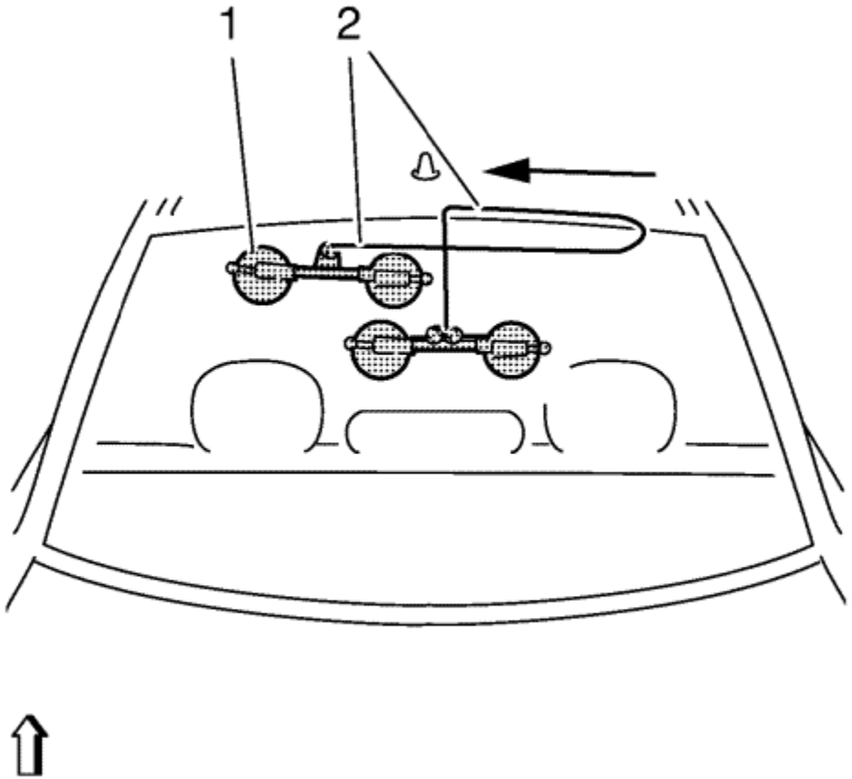

Note: Ensure that the cutting wire (2) is fitted correctly to the winch deflection roller.

34. Place the winch (1) with one winding head on the inside of the tailgate window.
35. Position winch (1) with one winding head next to winch with two winding heads so that the cutting wire (2) crosses.
36. The winch (1) with 2 winding heads remains in the position.
37. Insert transfer ratchet and apply tension to the cutting wire.

Note: Arrow shows the path of the cutting wire (1).

38. Cut out the tailgate window until the cutting wire (2) has cut through the adhesive bead completely.
39. Remove the glass removal system.
40. Install and lock the *BO-641* holder onto the tailgate window.

Note: A second technician is required.

41. Remove the tailgate window from the vehicle.

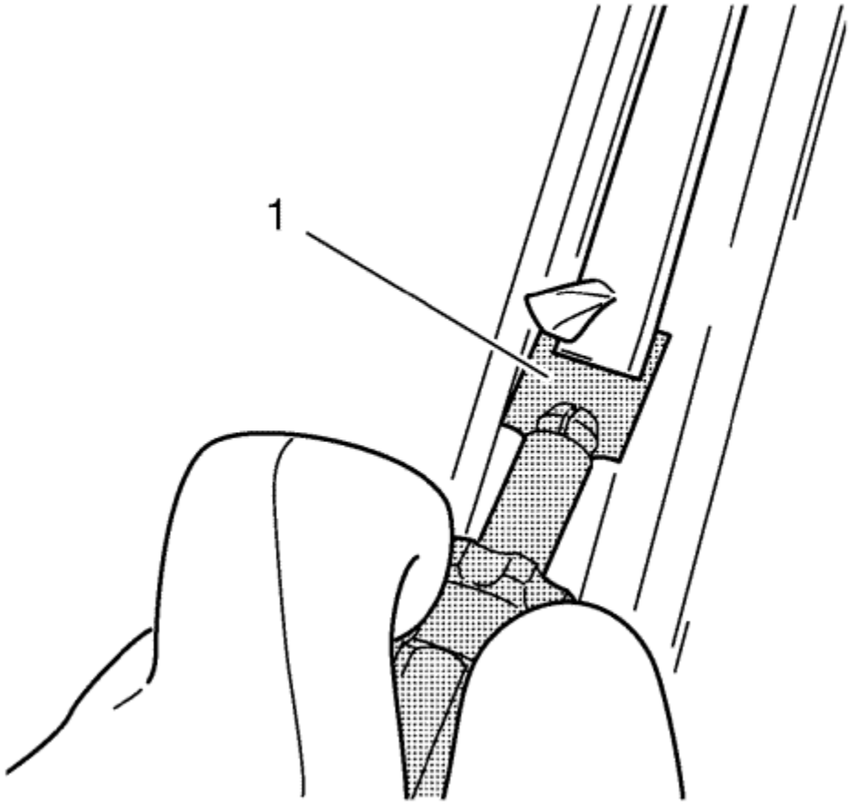

42. Cut the adhesive tape with the provided knife (1) within a depth of **1 mm (0.039 in)**.
43. Repair any paint damage, using a touch-up pen that matches the vehicle color.
44. Replace the tailgate window rubber if damaged.
45. Cut the adhesive tape on the glass pane with the provided knife within a depth of **1 mm (0.039 in)**.

Installation Procedure

1. Remove all mounds or loose pieces of urethane adhesive from the pinch-weld area.
2. Inspect for any of the following conditions in order to help prevent future breakage of the window:
   - High weld
   - Solder spots
   - Hardened sealer
   - Any other obstruction or irregularity in the pinch-weld flange

3. After repairing the tailgate window opening as indicated, remove all traces of broken glass from the outer cowl panel, seats, and floor.

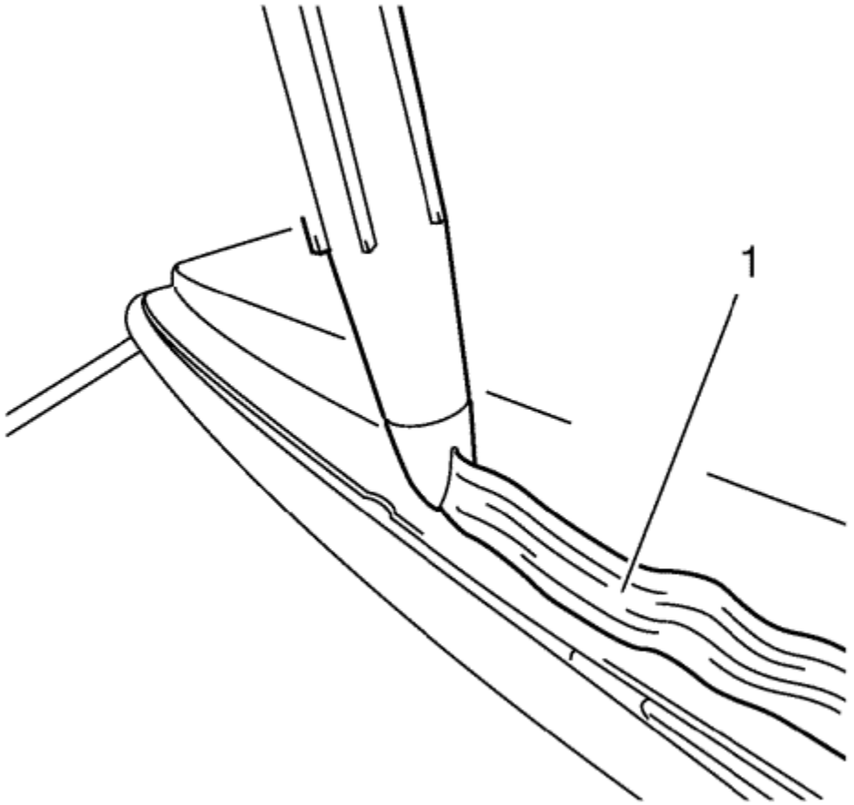

4. Apply an adhesive bead (1).

   Cut into the tip of the cartridge so that a bead of adhesive with a thickness approx. of **13 mm (0.511 in)** is produced.

   Note: A second technician is required.

5. Insert the tailgate window.
   5.1. Insert tailgate window, using the *BO-641* holder .
   5.2. Place the tailgate window on the roof frames and lower it down.
6. Use fabric tape to secure the tailgate window in position.
7. Remove any excessive urethane adhesive from the body, using a suitable cleaner.

   Note: A second technician is required.

8. Use a soft spray of warm water in order for a immediate water leak test.
9. Inspect the tailgate window for leaks.
10. If any leaks are found, use a plastic paddle in order to apply extra urethane adhesive to the leak point.
11. Repeat the water leak test.
12. Maintain the following conditions in order to assure a proper cure of the urethane adhesive:
    12.1. Lower a door window partially in order to prevent pressure buildups when closing the doors before the adhesive is cured.
    12.2. DO NOT drive the vehicle until the adhesive is cured. Refer to the above curing times.
    12.3. DO NOT use compressed air to dry the adhesive.
13. Install the rear end spoiler. Refer to Rear End Spoiler Replacement .
14. Connect the tailgate window demister electrical connectors to the bus bar.
15. Install the rear window radio antenna connects.
16. Install the tailgate lower trim finish panel. Refer to Tailgate Lower Trim Finish Panel Replacement .
17. Remove the double layer of masking tape around the perimeter of the painted surfaces and the interior trim.
18. Close the tailgate.

&#169© Copyright Chevrolet. All rights reserved

Tailgate Lower Window Replacement

Special Tools

- *BO-24402-A* Glass Sealant Remover (Cold Knife)
- *BO-39032* Stationary Glass Removal Tool
- Use an adhesive that is approved by GM

For equivalent regional tools, refer to Special Tools

Removal Procedure

Warning: Refer to Cracked Window Warning in the Preface section.

Note: Before cutting out a stationary window, apply a double layer of masking tape around the perimeter of the painted surfaces and the interior trim.

1. Open the tailgate.
2. Remove the tailgate lower trim finish panel. Refer to Tailgate Lower Trim Finish Panel Replacement and Tailgate Lower Trim Finish Panel Replacement .
3. Remove the rear end spoiler. Refer to Rear End Spoiler Replacement .

Warning: Refer to Defroster Outlet Warning in the Preface section.

4. Cover the following parts to protect from broken glass:
   - Upper dash pad
   - Demister outlets and A/C outlets
   - Seats and carpeting

Warning: Refer to Glass and Sheet Metal Handling Warning in the Preface section.

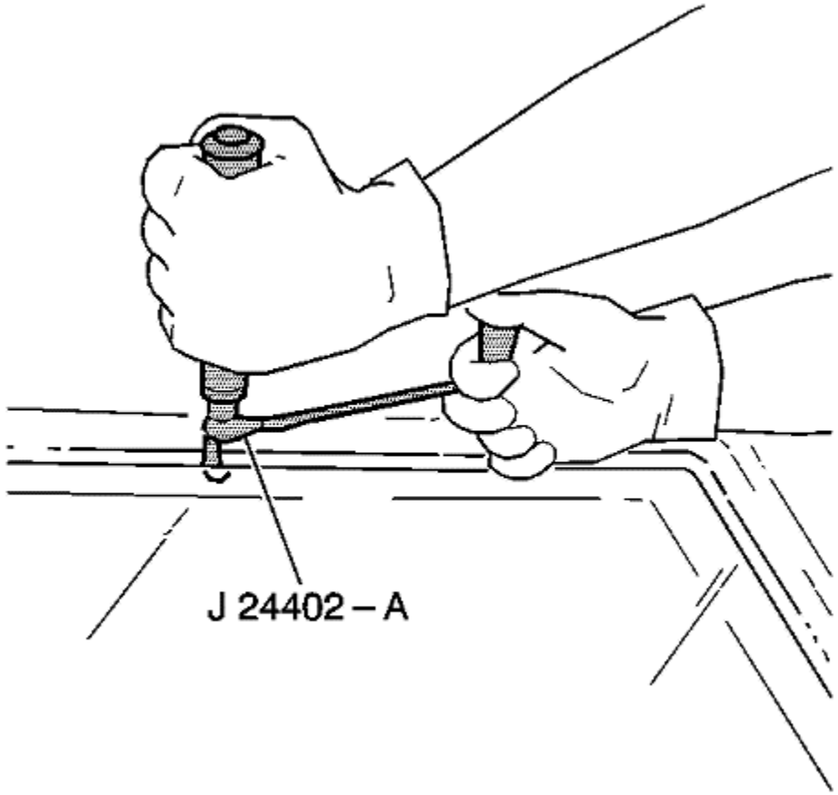

Note: Keep the cutting edge of the tool against the window. Use care Not to damage the window corner retainers. If the window retainers get cut off when removing the window it will be necessary to tape the window in place until cured.

5. Remove the window from the urethane adhesive.
   - Leave a base of urethane approximately 2 mm (0.078 in) on the pinch-weld flange.
   - The only suitable lubrication is clear water.
   - *BO-24402-A* Glass Sealant Remover (Cold Knife)
   - *BO-39032* Stationary Glass Removal Tool
6. If necessary, use a long utility knife or similar tool to remove the bottom corners of the window from the urethane adhesive.

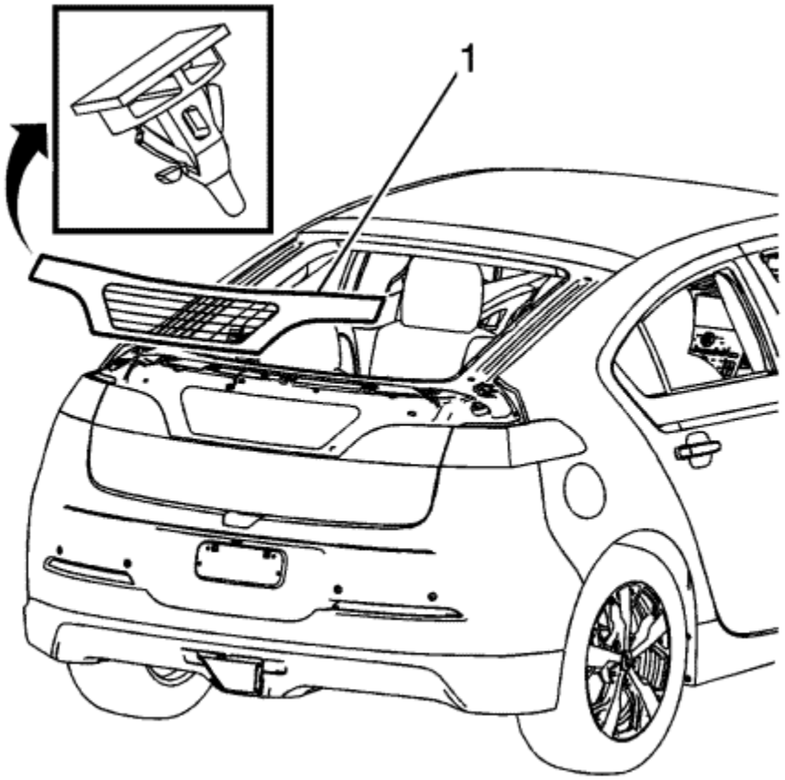

7. With an assistant, remove the window (1) from the vehicle, place the window on a clean soft surface.

Installation Procedure

1. Install the tailgate lower window into the opening using the appropriate urethane adhesive.
2. Install the rear end spoiler. Refer to Rear End Spoiler Replacement .
3. Install the tailgate lower trim finish panel. Refer to Tailgate Lower Trim Finish Panel Replacement and Tailgate Lower Trim Finish Panel Replacement .
4. Remove the double layer of masking tape around the perimeter of the painted surfaces and the interior trim.
5. Close the tailgate.

&#169© Copyright Chevrolet. All rights reserved

Front Side Door Window Channel Replacement

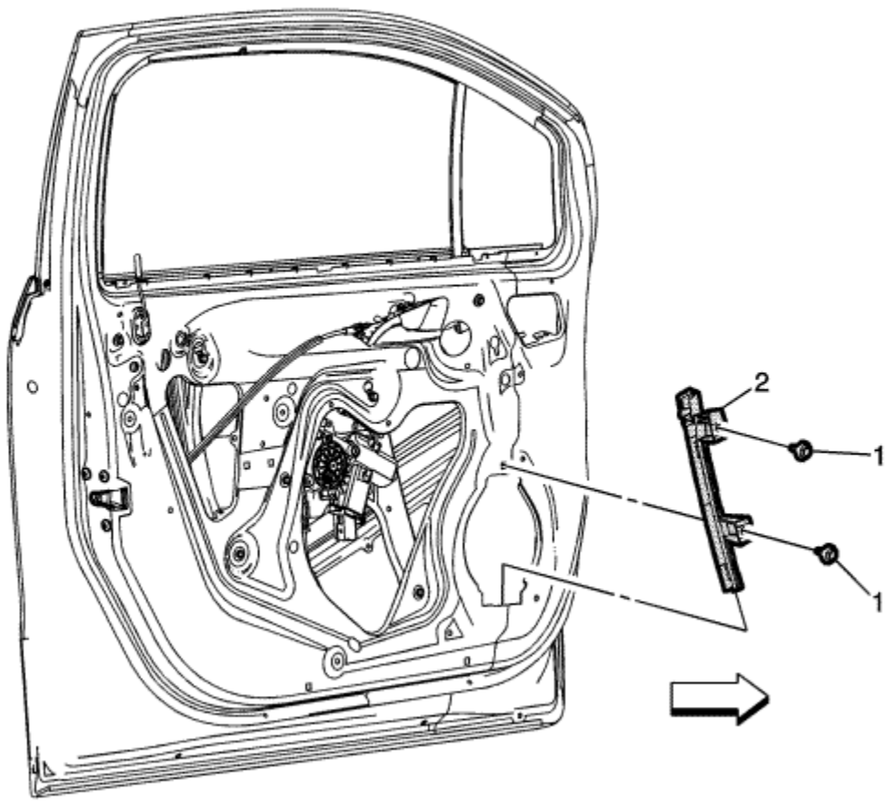

Callout	Component Name

Warning: Disconnect the power window switch when working inside the driver door. When operated, the Express Up/Down Feature allows the door window to move very quickly, without stopping, which could cause personal injury.

Preliminary Procedures

1. Position the window to the full up position.
2. Remove the front side door trim panel. Refer to Front Side Door Trim Replacement .

1	Front Side Door Window Front Channel Bolts (Qty: 2) **Caution:** Refer to Fastener Caution in the Preface section. **Procedure** 1. Reposition the water deflector. 2. Pull the weatherstrip from the front channel. **Tighten** 11 N·m (97 lb in)
2	Front Side Door Window Front Channel **Tip** Inspect the window for proper operation before installing the door trim panel.

© Copyright Chevrolet. All rights reserved

Rear Side Door Window Rear Channel Replacement

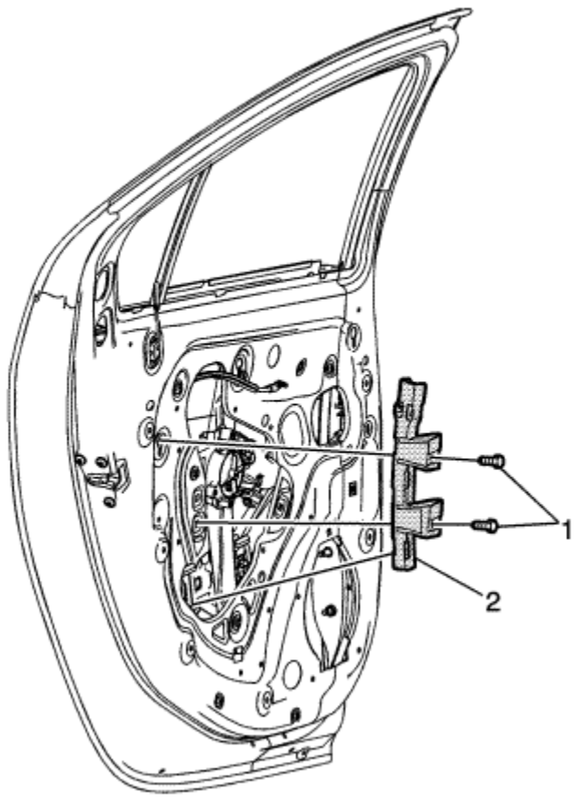

Callout	Component Name
Warning: Disconnect the power window switch when working inside the driver door. When operated, the Express Up/Down Feature allows the door window to move very quickly, without stopping, which could cause personal injury. **Preliminary Procedures**	

1. Position the window to the full up position.
2. Remove the rear side door trim panel. Refer to Rear Side Door Trim Replacement .

1	Rear Side Door Window Rear Channel Bolts (Qty :2) **Caution:** Refer to Fastener Caution in the Preface section. **Procedure** 1. Remove the door trim panel bracket. 2. Remove the water deflector. 3. Remove the weatherstrip from the channel. **Tighten** 11 N·m (97 lb in)
2	Rear Side Door Window Rear Channel **Tip** Inspect the window for proper operation before installing the door trim panel.

© Copyright Chevrolet. All rights reserved

Front Side Door Window Switch Replacement

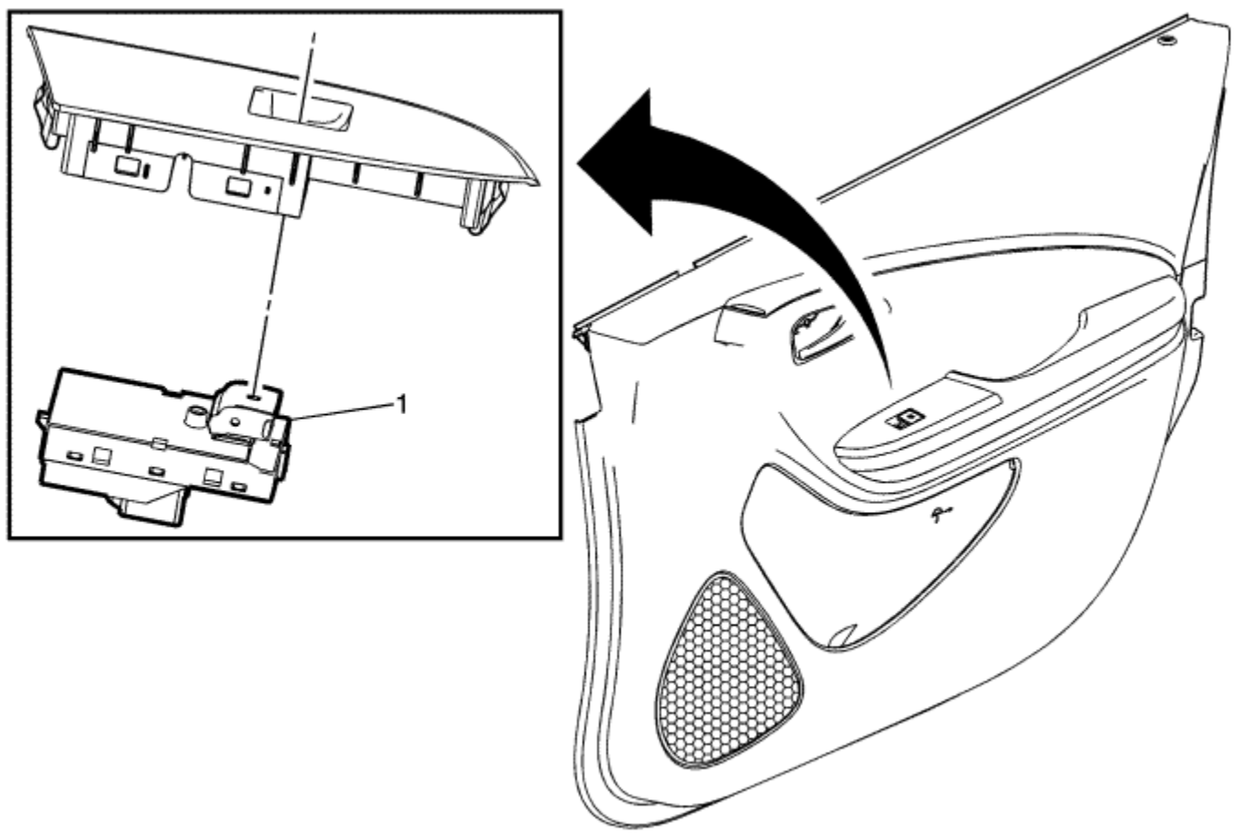

Callout	Component Name
Preliminary Procedure Remove the front side door accessory switch mount plate. Refer to Front Side Door Accessory Switch Mount Plate Replacement : Passenger Side Door → Drivers Side Door .	
	Front Side Door Window Switch Assembly

1	**Procedure** Disconnect the electrical connectors.

© Copyright Chevrolet. All rights reserved

Front Side Door Window and Multifunction Switch Replacement

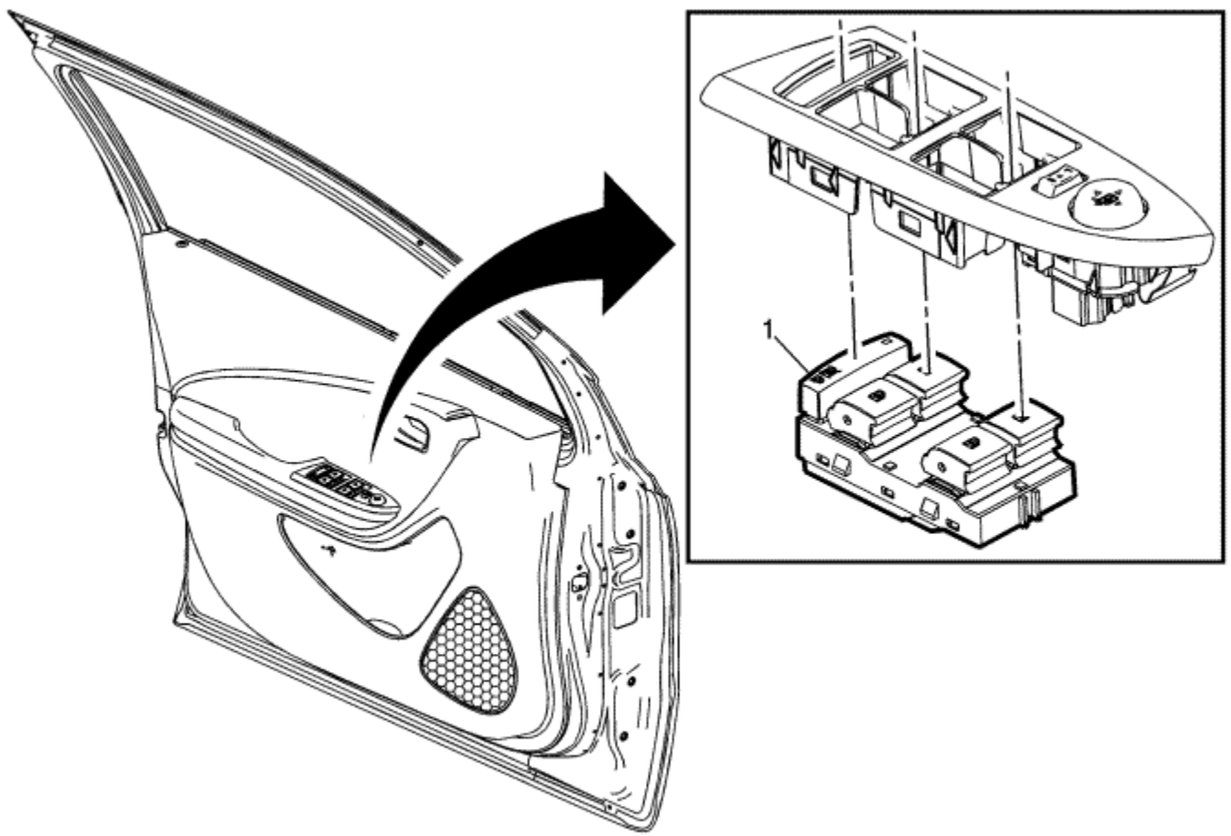

Callout	Component Name
Preliminary Procedure Remove the front side door accessory switch mount plate. Refer to Front Side Door Accessory Switch Mount Plate Replacement : Passenger Side Door → Drivers Side Door .	
	Front Side Door Window and Multifunction Switch Assembly

1	**Procedure** Disconnect the electrical connectors.

© Copyright Chevrolet. All rights reserved

Rear Side Door Window Switch Replacement

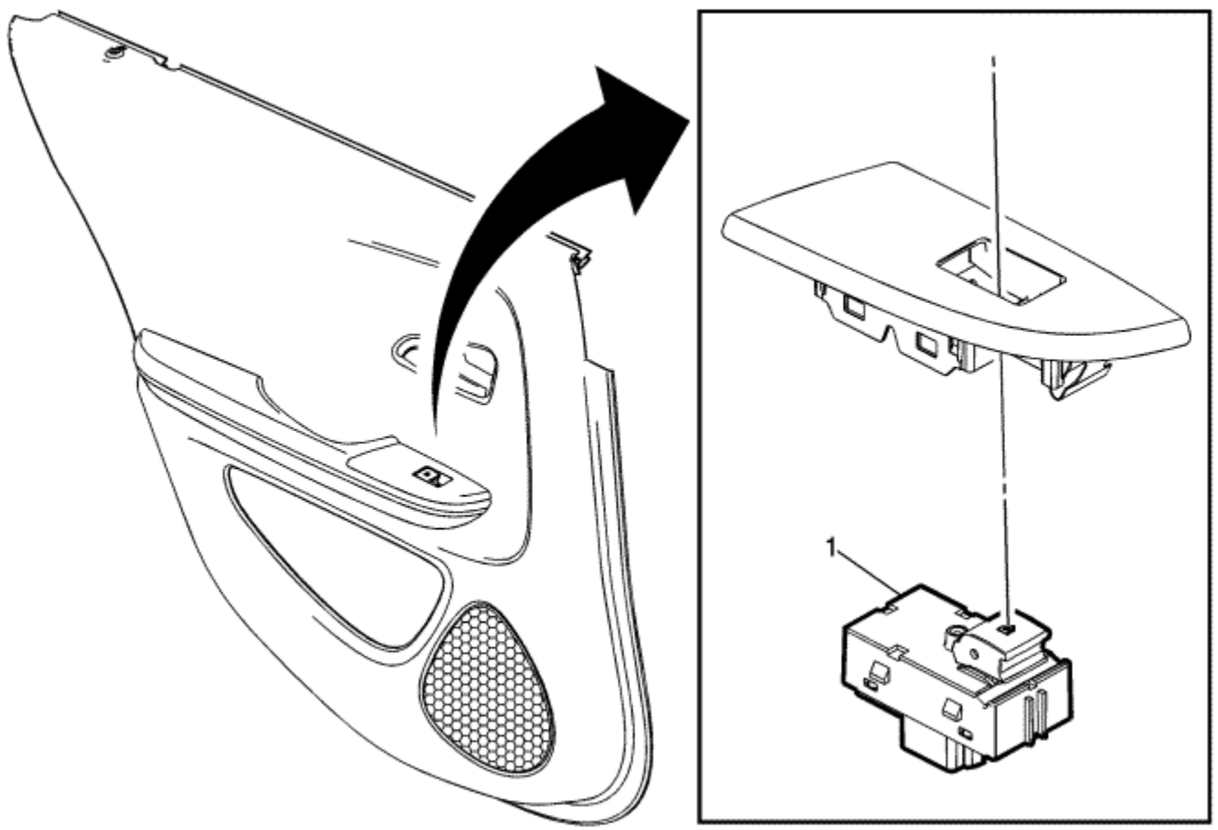

Callout	Component Name
Preliminary Procedure Remove the rear side door accessory switch mount plate. Refer to Rear Side Door Accessory Switch Mount Plate Replacement .	
	Rear Side Door Window Switch Assembly

1	**Procedure** Disconnect the electrical connectors.

© Copyright Chevrolet. All rights reserved

Front Side Door Window Regulator Replacement

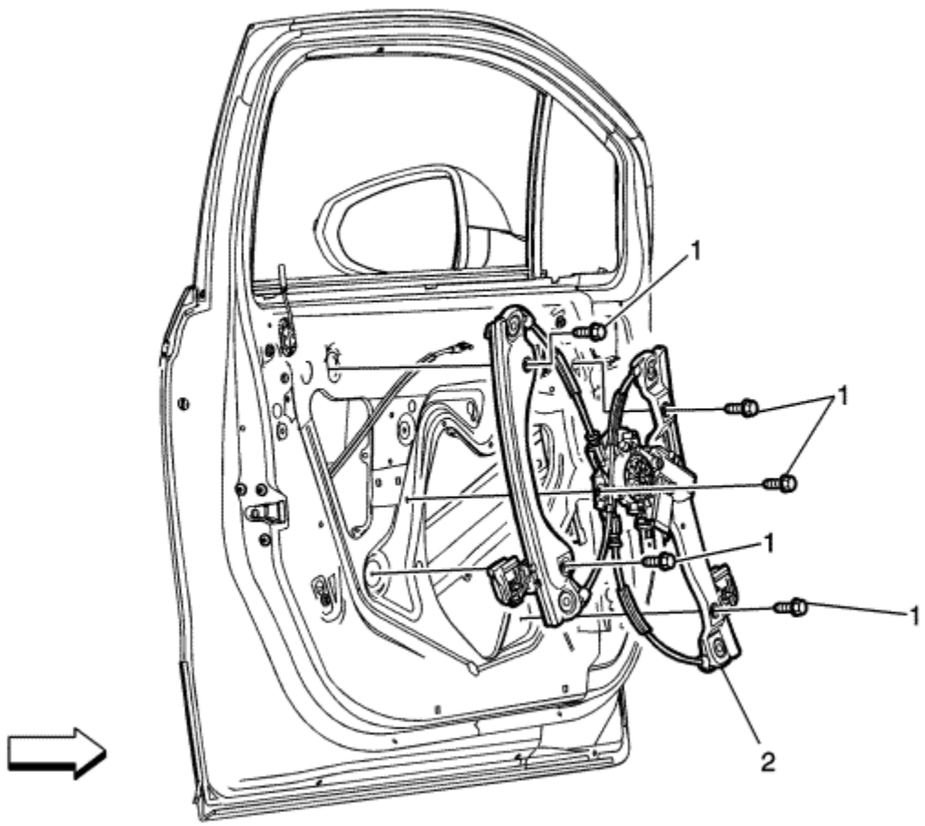

Callout	Component Name

Warning: Disconnect the power window switch when working inside the driver door. When operated, the Express Up/Down Feature allows the door window to move very quickly, without stopping, which could cause personal injury.

Preliminary Procedures

1. Loosen the front side door window from the guide nuts. Do not remove the window from the door. Refer to Front Side Door Window Replacement .
2. Remove the front side door trim panel bracket.

1	Front Side Door Window Regulator Bolts (Qty: 5) **Caution:** Refer to Fastener Caution in the Preface section. **Procedure** 1. Remove the water deflector. 2. Do Not to remove the window guides nuts from the window regulator. 3. After releasing the window from the guides tape the window to the upper door frame before removing the regulator bolts. 4. Disconnect the electrical connector. **Tighten** 11 N·m (97 lb in)
2	Front Side Door Window Regulator **Procedure** 1. Remove the window regulator through the opening in the inner door panel. 2. Transfer all parts as necessary. **Tip** Inspect the window for proper operation before installing the door trim panel.

© Copyright Chevrolet. All rights reserved

Window Motor Programming - Express Function

Window Motor Normalised Procedure

A window motor that has not been normalised will no longer perform the express up and express down functions, this may occur during the following conditions:

- When a window motor has been disconnected
- When a door harness has been disconnected
- When the battery has been disconnected or replaced

Note: When DTC B3205 4B & 3210 4B are set, the following warnings will be displayed on the driver information centre:

Open, then Close Driver Window

Open, then Close Passenger Window

These warnings will clear once the windows have been "Normalised" and the respective DTC will clear.

To normalise the window motor, follow these steps:

> **Note:** The doors must be completely closed prior to normalising the windows, a door that is open or ajar may cause the power window to function abnormally or to become inoperative while performing the normalising procedure. If this occurs, verify that the door is completely closed then repeat the normalising procedure.

1. Vehicle in Service Mode.
2. Starting with the window completely UP, press and hold the power window switch until the window is fully open and continue holding the switch down for approximately 5 seconds after the window is completely open.
3. Pull the power window switch up until the window is fully closed and continue holding the switch up for approximately 5 seconds after the window is completely closed.

The window should now be normalised and the window should perform the express up and express down functions.

Window Motor Relearn Procedure

A relearn procedure may need to be performed for any Local Interconnect Network (LIN) window motor for the following conditions:

- When the window glass is out of alignment
- When the window glass has been replaced

- When the door has been replaced
- When the window regulator has been replaced

Note: Prior to performing the relearn procedure the vehicle must have all 4 wheels properly inflated and mounted, the vehicle must be sitting on a level surface and all doors must be completely closed.

To relearn the window motor, follow these steps:

1. Vehicle in Service Mode.
2. With a scan tool, select Module Diagnosis, Body Control Module, Configuration/Reset Functions and then select the appropriate Clear Window Learn Values for the window motor requiring the relearn procedure.
3. After the learn procedure, exit the scan tool learn procedure completely, the power window cannot be normalised and will not function until you exit the program.
4. Starting with the window completely UP, press and hold the power window switch until the window is fully open and continue holding the switch down for approximately 5 seconds after the window is completely open.
5. Pull the power window switch up until the window is fully closed and continue holding the switch up for approximately 5 seconds after the window is completely closed.

The window is now reprogrammed.

&#169© Copyright Chevrolet. All rights reserved

Front Side Door Window Regulator Motor Replacement

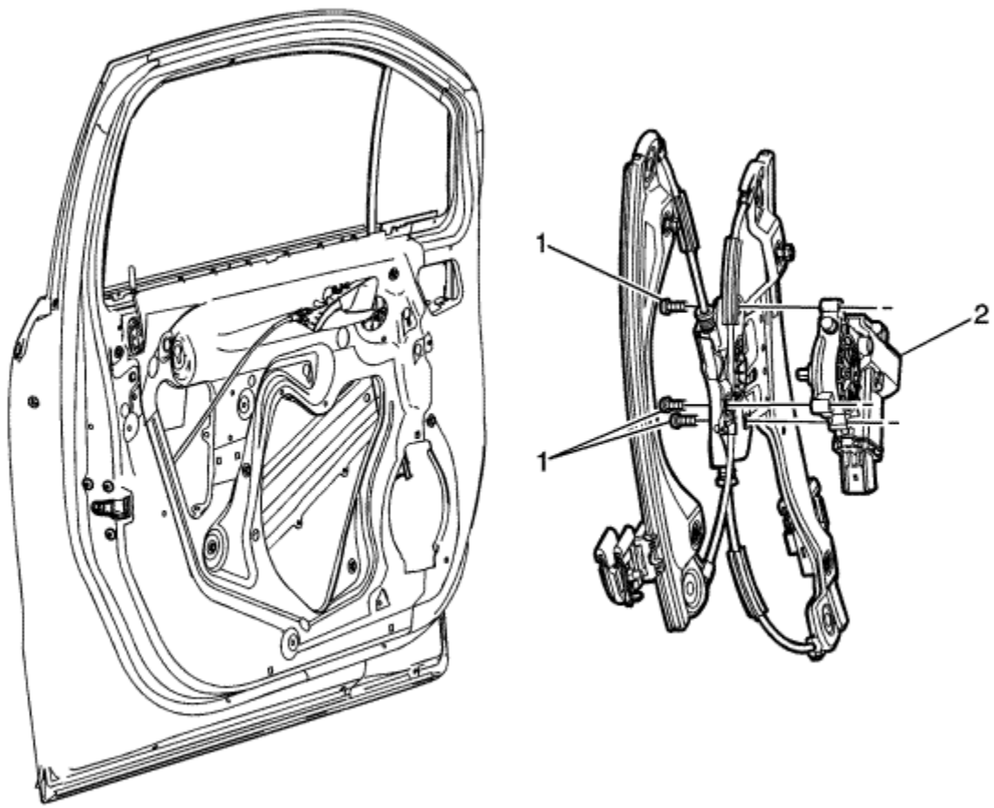

Callout	Component Name

Warning: Disconnect the power window switch when working inside the driver door. When operated, the Express Up/Down Feature allows the door window to move very quickly, without stopping, which could cause personal injury.

Preliminary Procedure

Remove the front side door window regulator. Refer to Front Side Door Window Regulator Replacement .	
1	Front Side Door Window Regulator Motor Screws (Qty: 3) **Caution:** Refer to Fastener Caution in the Preface section. **Tighten** 5 N·m (44 lb in)
2	Front Side Door Window Regulator Motor **Tip** Inspect the window for proper operation before installing the door trim panel.

© Copyright Chevrolet. All rights reserved

Rear Side Door Window Regulator Replacement

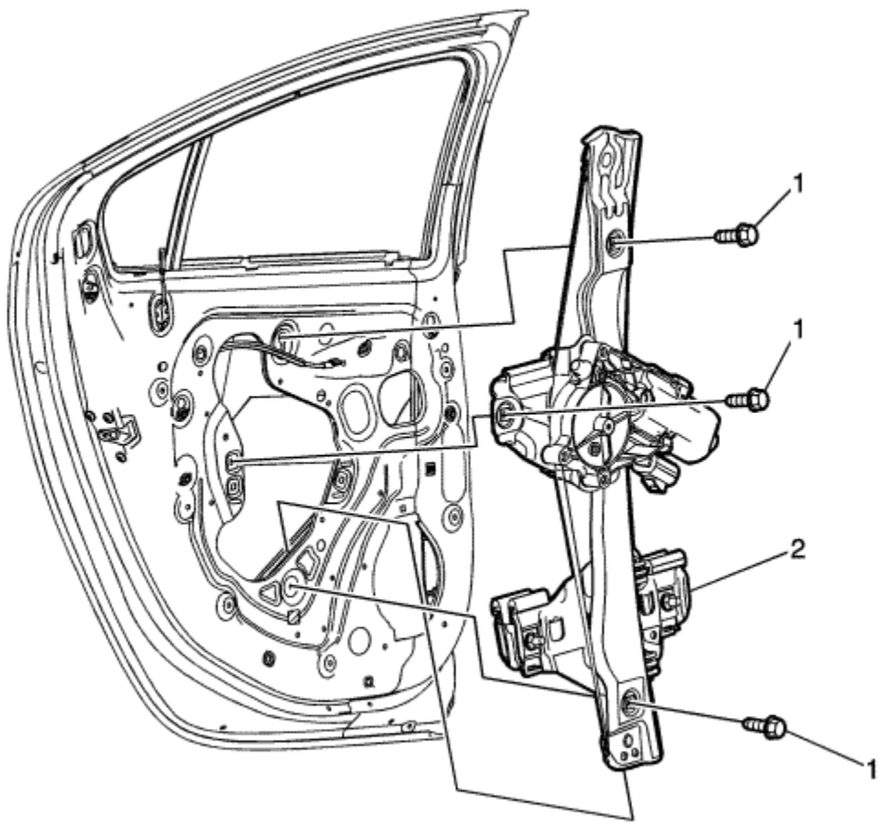

Callout	Component Name
Warning: Disconnect the power window switch when working inside the driver door. When operated, the Express Up/Down Feature allows the door window to move very quickly, without stopping, which could cause personal injury. **Preliminary Procedure**	

Loosen the rear side door window from the guide nuts. Do not remove the window from the door. Refer to Rear Side Door Window Replacement .	
1	Rear Side Door Window Regulator Bolts (Qty: 3) **Caution:** Refer to Fastener Caution in the Preface section. **Procedure** 1. Remove the door trim panel bracket. 2. Remove the water deflector. 3. Do not remove the window guides nuts from the window regulator. 4. After releasing the window from the guides tape the window to the upper door frame before removing the regulator bolts. 5. Disconnect the electrical connector. **Tighten** 11 N·m (97 lb in)
2	Rear Side Door Window Regulator **Procedure** 1. Remove the window regulator through the opening in the inner panel. 2. Transfer all parts as necessary. **Tip** Inspect the window for proper operation before installing the door trim panel.

© Copyright Chevrolet. All rights reserved

Rear Side Door Window Regulator Motor Replacement

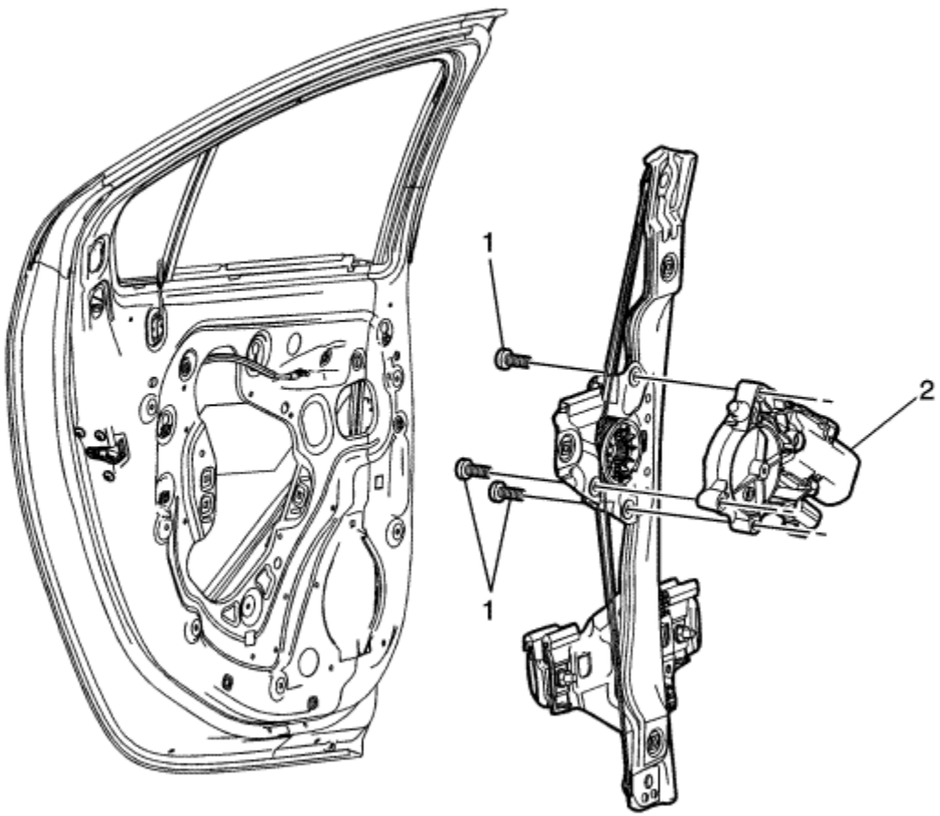

Callout	Component Name

Warning: Disconnect the power window switch when working inside the driver door. When operated, the Express Up/Down Feature allows the door window to move very quickly, without stopping, which could cause personal injury.

Preliminary Procedures

Remove the rear side door window regulator. Refer to Rear Side Door Window Regulator Replacement .	
1	Rear Side Door Window Regulator Motor Screws (Qty: 3) **Caution:** Refer to Fastener Caution in the Preface section. **Tighten** 5 N·m (44 lb in)
2	Rear Side Door Window Regulator Motor **Tip** Inspect the window for proper operation before installing the door trim panel.

© Copyright Chevrolet. All rights reserved

Rear Side Door Window Belt Reveal Molding Replacement - Upper

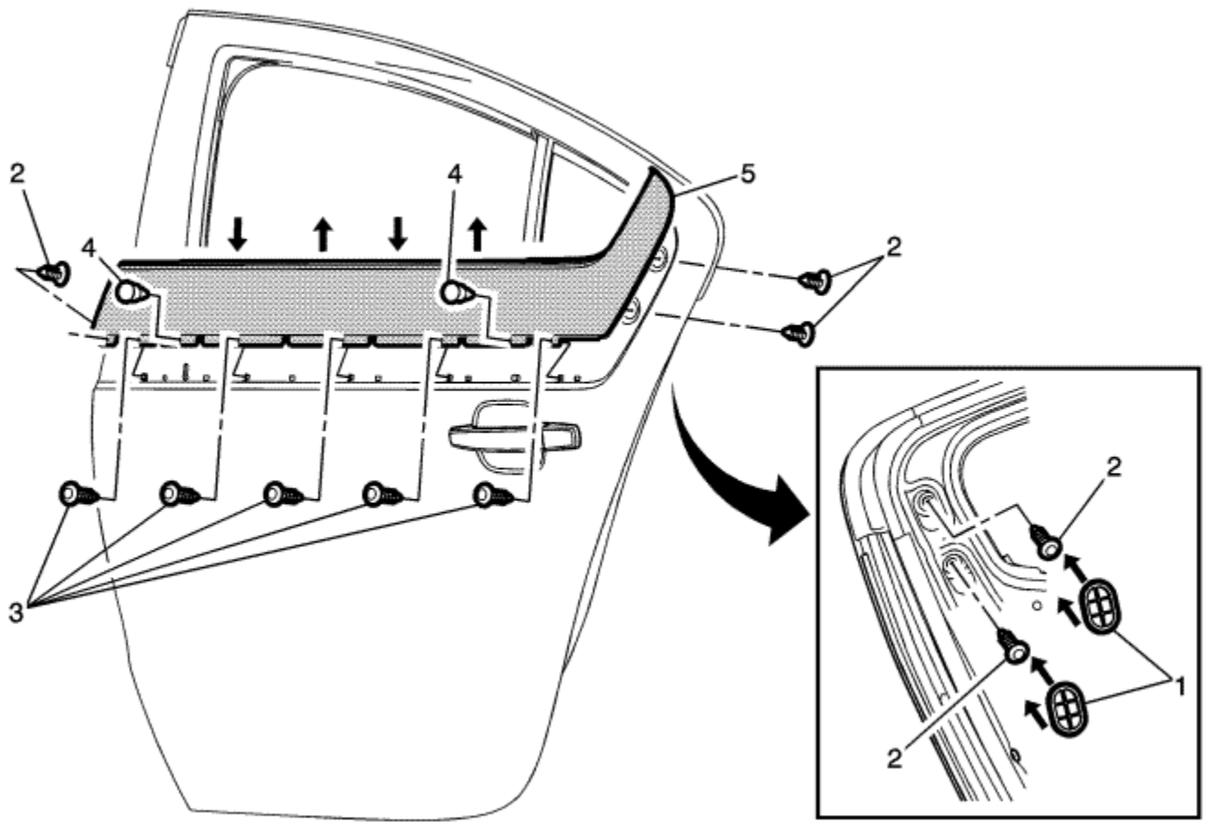

Callout	Component Name
Preliminary Procedures	

1. Remove the rear side door window garnish molding. Refer to Rear Side Door Window Garnish Molding Replacement .
2. It will be necessary to remove the lower bright chrome reveal molding to expose the screws, refer to the lower molding. Refer to Rear Side Door Window Belt Reveal Molding Replacement : Lower → Upper .

1	Rear Side Door Window Belt Reveal Molding Frame Screw Covers (Qty: 2) **Procedure** Place the door window in the full down position. **Tip** Two screws are located in the lower corner of the upper door frame under the covers.
2	Rear Side Door Window Belt Reveal Molding Frame Screws (Qty: 3) **Caution:** Refer to Fastener Caution in the Preface section. **Tighten** 2.5 N·m (22 lb in)
3	Rear Side Door Window Belt Reveal Molding Screw (Qty: 5) **Procedure** One screw is located on the back side located in the front corner of the door frame. **Tighten** 2.5 N·m (22 lb in)
4	Rear Side Door Window Belt Reveal Molding Push-In Retainers (Qty: 2) **Tip** Lift upward on the molding and sealing strip releasing it from the pinchweld flange.
5	Rear Side Door Window Belt Reveal Molding **Tip** Inspect the window for proper operation before installing the door trim panel.

© Copyright Chevrolet. All rights reserved

Rear Side Door Window Belt Reveal Molding Replacement - Lower

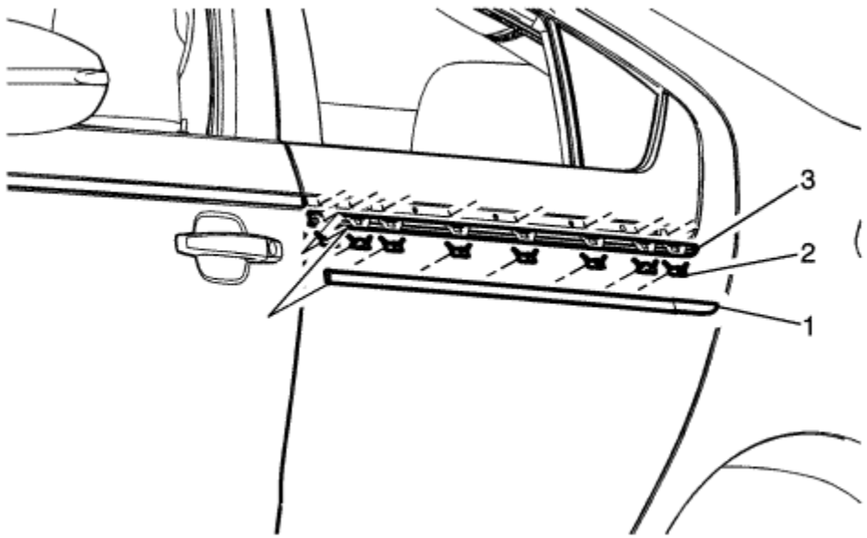

Callout	Component Name
1	Rear Side Door Bright Molding **Procedure** 1. Apply several layers of masking tape to the bottom and top edge of the rear side door bright molding in order to protect the painted finish. 2. Start at the lower rear edge of the bright lower molding. Use the tool in a twisting and lifting motion only. 3. Working from rear of the molding to the rear of the door. 4. Work the suitable tool (flat plastic) across the bottom edge of the molding releasing the clips from the molding.
2	Rear Side Door Bright Molding Clips (Qty: 8) **Procedure** 1. The clips are removed by turning them halfway or a hundred and eighty degrees) counter clockwise or until the clip release the outer door panel.

	2. Mark the location of the clips when removing.
3	Rear Side Door Bright Molding 1. Install the clips to the bright molding if any of the clips are damage, it will be necessary to be replace them. 2. Install the bright molding rubber seal to the molding after the clips have been reinstalled. 3. Place the clips to the location in the outer door panel and push inward until fully seated.

© Copyright Chevrolet. All rights reserved

Front Side Door Window Belt Reveal Molding Replacement - Upper

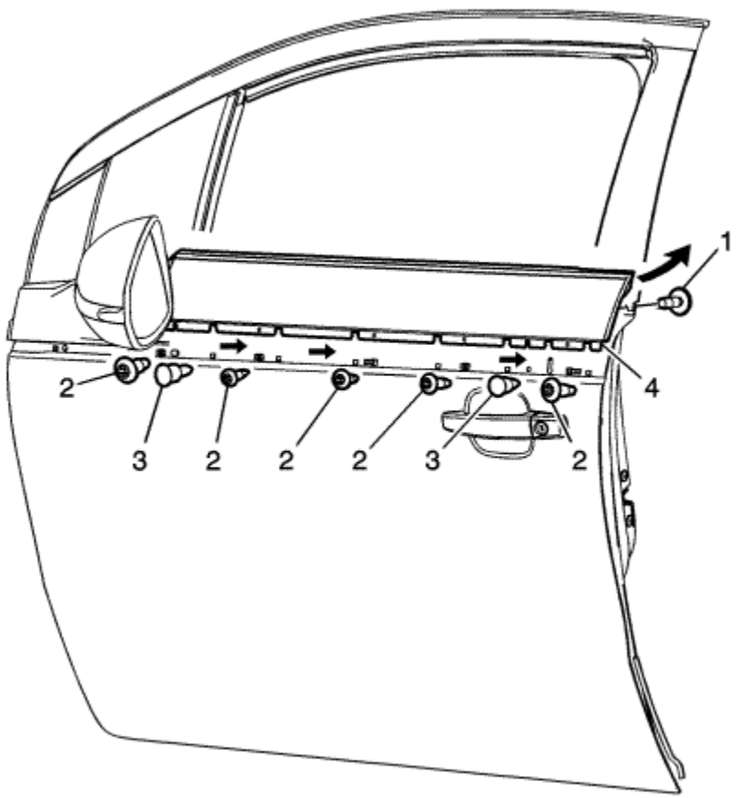

Callout	Component Name
Preliminary Procedure It will be necessary to remove the lower bright chrome reveal molding to expose the screws. Refer to Front Side Door Window Belt Reveal Molding Replacement : Lower → Upper .	
	Front Side Door Window Belt Reveal Molding Frame Screw

1	**Caution:** Refer to Fastener Caution in the Preface section. **Procedure** Place the door window in the full down position. **Tighten** 2.5 N·m (22 lb in) **Tip** Do Not remove the outside wing mirror for this procedure.
2	Front Side Door Window Belt Reveal Molding Frame Screws (Qty: 5) **Tighten** 2.5 N·m (22 lb in)
3	Front Side Door Window Belt Reveal Molding Push-In Retainers (Qty: 2) **Tip** Lift upward on the molding and sealing strip releasing it from the pinchweld flange.
4	Front Side Door Window Belt Reveal Molding **Tip** Inspect the window for proper operation before installing the door trim panel.

© Copyright Chevrolet. All rights reserved

Front Side Door Window Belt Reveal Molding Replacement - Lower

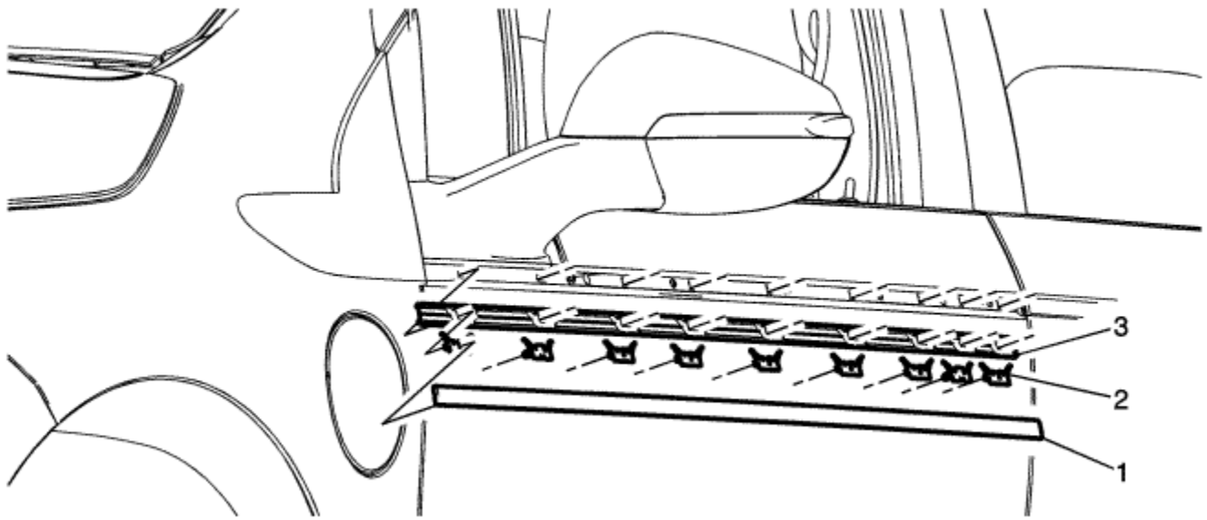

Callout	Component Name
1	Front Side Door Bright Molding **Procedure** 1. Apply several layers of masking tape to the bottom and top edge of the front side door bright molding in order to protect the painted finish. 2. Start at the lower rear edge of the bright lower molding. Use the tool in a twisting and lifting motion only. 3. Working from rear of the molding to the front of the door. 4. Work the suitable tool (flat plastic) across the bottom edge of the molding releasing the clips from the molding.
2	Front Side Door Bright Molding Clips (Qty: 9) **Procedure** 1. The clips are removed by turning them halfway or a hundred and eighty degrees) counter clockwise or until the clip release the outer door panel.

	2. Mark the location of the clips when removing.
3	Front Side Door Bright Molding 1. Install the clips to the bright molding if any of the clips are damage, it will be necessary to be replace them. 2. Install the bright molding rubber seal to the molding after the clips have been reinstalled. 3. Place the clips to the location in the outer door panel and push inward until fully seated.

© Copyright Chevrolet. All rights reserved

Front Side Door Window Outer Weatherstrip Replacement

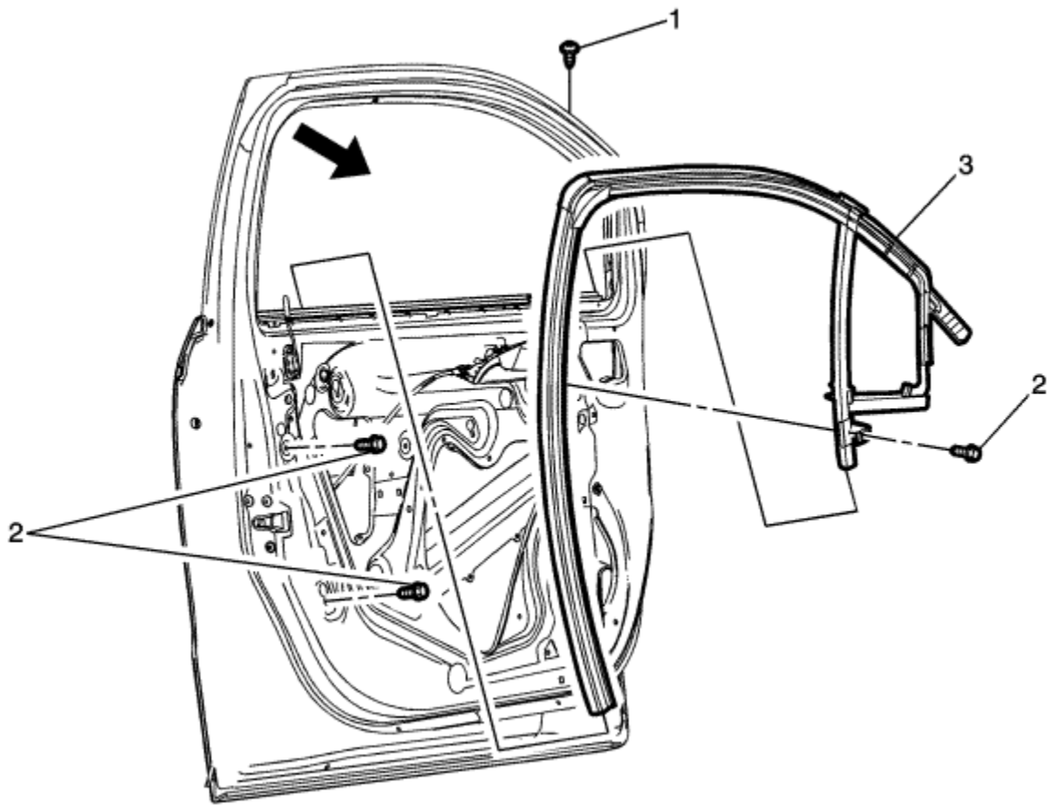

Callout	Component Name
Preliminary Procedures	

1. Remove the front side door window. Refer to Front Side Door Window Replacement .
2. Remove the front side door mirror applique. Refer to Outside Wing Mirror Applique Replacement .
3. Remove the outside view mirror. Refer to Outside Rearview Mirror Replacement .

1	Front Side Door Window Outer Weatherstrip Upper Screw **Caution:** Refer to Fastener Caution in the Preface section. **Procedure** 1. Use masking tape, tape off the upper belt reveal molding to protect the finish. 2. Remove the screw from the upper door frame, under the outer door weatherstrip. Reposition the door weatherstrip to access. **Tighten** 2.5 N·m (22 lb in)
2	Front Side Door Window Outer Weatherstrip Lower Frame Bolts (Qty: 3) **Tighten** 11 N·m (97 lb in)
3	Front Side Door Window Outer Weatherstrip **Procedure** Grasp the front top corner of the window and outer weatherstrip, pull rearward and down releasing the assembly from the door frame. **Tip** Inspect the window for proper operation before installing the door trim panel.

© Copyright Chevrolet. All rights reserved

Rear Side Door Window Outer Weatherstrip Replacement

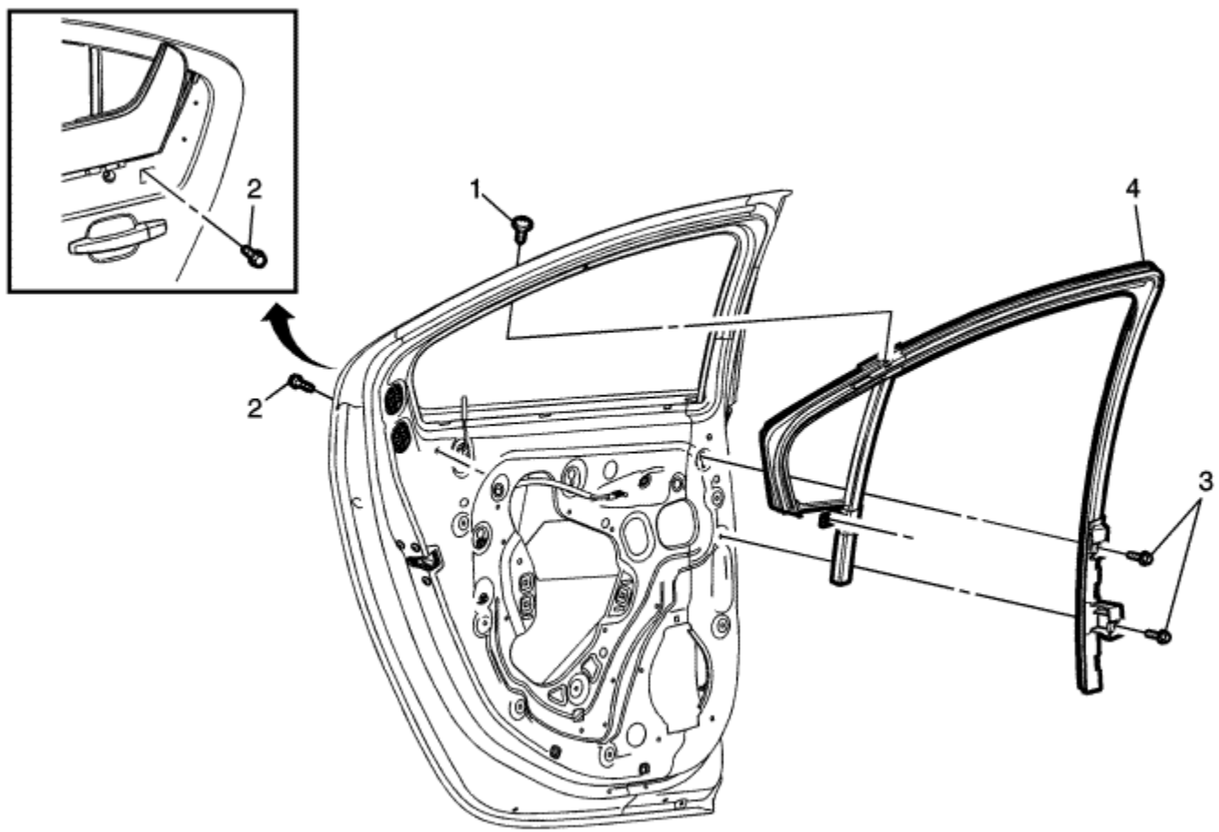

Callout	Component Name
Preliminary Procedures	
1. Remove the upper rear side door belt reveal molding. Refer to Rear Side Door Window Belt Reveal Molding Replacement : Lower → Upper . 2. Remove the rear side door window. Refer to Rear Side Door Window Replacement .	

1	Rear Side Door Window Upper Weatherstrip Screw **Tip** Reposition the door weatherstrip to access.
2	Rear Side Door Window Outer Weatherstrip Screw **Tighten** 2 N·m (22 lb in) **Tip** The screw is located under the outer weatherstrip, in the lower fame.
3	Rear Side Door Window Weatherstrip Lower Bolt (Qty: 2) **Tighten** 11 N·m (97 lb in)
4	Rear Side Door Window Weatherstrip **Procedure** Grasp the rear top corner of the outer window and weatherstrip, pull rearward and down releasing the assembly from the door frame. **Tip** Inspect the window for proper operation before installing the door trim panel.

© Copyright Chevrolet. All rights reserved

Front Side Door Window Rear Channel Replacement

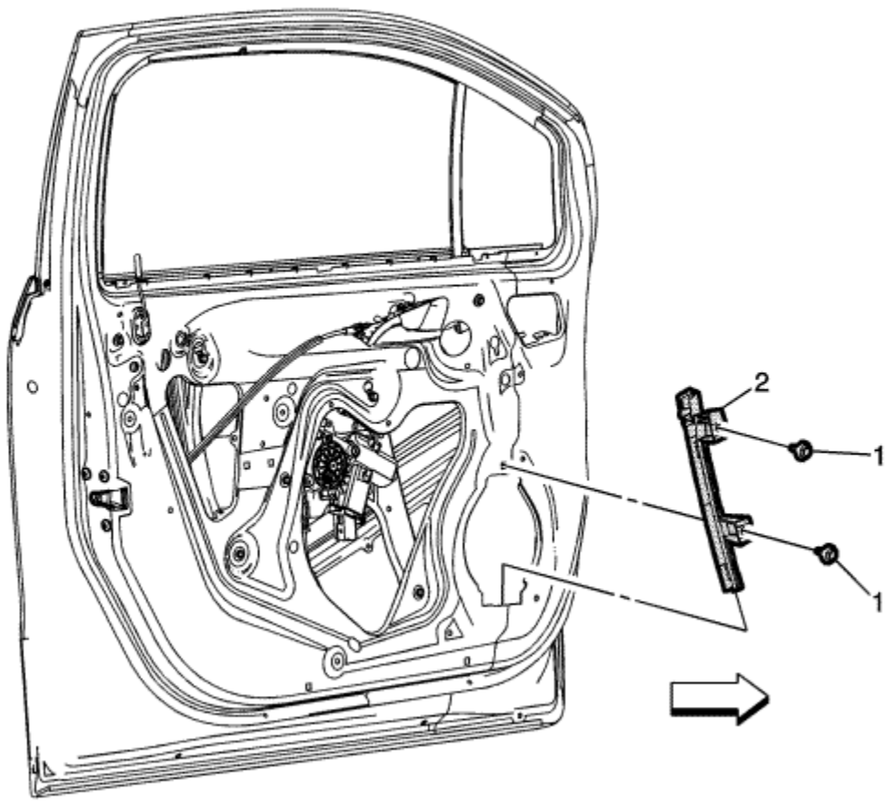

Callout	Component Name

Warning: Disconnect the power window switch when working inside the driver door. When operated, the Express Up/Down Feature allows the door window to move very quickly, without stopping, which could cause personal injury.

Preliminary Procedures

1. Position the window to the full up position.
2. Remove the front side door trim panel. Refer to Front Side Door Trim Replacement .

1	Front Side Door Window Front Channel Bolts (Qty: 2) **Caution:** Refer to Fastener Caution in the Preface section. **Procedure** 1. Reposition the water deflector. 2. Pull the weatherstrip from the front channel. **Tighten** 11 N·m (97 lb in)
2	Front Side Door Window Front Channel **Tip** Inspect the window for proper operation before installing the door trim panel.

© Copyright Chevrolet. All rights reserved

Power Windows Description and Operation

Power Windows System Components

The power window system consists of the following components:

- Driver window switch
- Passenger window switch
- Left rear window switch
- Right rear window switch
- Window motors in each of the doors
- F24U 30A Fuse
- F55U 7.5A Fuse
- F21UA 30A Fuse
- Body control module (BCM)

Driver Express Up and Express Down Power Window Motor

The driver door contains a window motor is smart motor that will detect excessive resistance while performing the express up function and automatically reverse direction to prevent injury to any occupants that may become trapped between the closing window and the door frame. The automatic reverse safety feature can be overridden by pulling and holding the window switch.

The logic circuit within the window motor monitors the up, down and express signal circuits which are normally equal to B+ voltage. When a switch is used on the driver window switch, the contacts close causing a voltage drop within the appropriate signal circuit. The driver window motor will detect the voltage drop and will command the window to move in the direction requested.

Passenger, Left Rear and Right Rear Express Down Window Motors

For the passenger, right rear and left rear doors, when their window switch is pressed in the down position, battery positive voltage is applied to their respective window motor control circuit and ground to the other window motor control circuit causing that window to open. When the individual window switch is pulled in the up position, voltage and ground is applied to the window motor in the opposite direction causing that window to close. The return path to ground is supplied through the inactive control circuit being normally grounded through the window switch.

Each passenger and rear window switch communicates to the BCM by a serial data circuit. When the driver wishes to control the passenger, left rear or right rear window, the

driver will use the appropriate switch on the driver window switch. When this switch is used, a serial data message is sent to the BCM requesting a window motor command, the BCM will then send a serial data message to the appropriate door window switch which will then command that window to move in the direction requested.

Lockout Switch Feature

The driver power window switch contains a window lockout switch, when the driver presses the window lockout switch, a serial data message is sent to the BCM which will send a disable command to the rear window switches, deactivating them. The rear windows will still function normally from the switches on the driver window switch.

&#169© Copyright Chevrolet. All rights reserved

Rear Window Demister Description and Operation

Rear Window Demister System Components

The rear window demister system consists of the following components:

- HVAC Control Module
- HVAC Control Head
- Rear Window Demister Relay
- Rear Demister Grid
- F28UA 40A Fuse

Rear Window Demister Operation

The rear demist control system utilises a single zone backlight design, driven with a single relay configuration. Additionally, up to two outside rear view mirrors can be heated if required. A switch for the customer to control the system is provided within the HVAC control head. Also included in the HVAC control head is an indicator to inform the customer with the current state of the system. The system is only operational when engine is running or during remote start.

Pressing the heated rear window switch on the HVAC control face plate causes the HVAC control head to send a serial data message to the HVAC control module requesting rear window demist operation. The HVAC control module upon receipt of the serial data message will provide voltage to the coil side of the rear window demister relay, this will energise the relay causing the relay switch contacts to close allowing B+ voltage to flow through the rear demister grid control circuit to the rear demister grid.

When the rear heated window switch is pressed and the engine is running, the rear demist control system will remain active for 10 minutes. After the initial cycle has lapsed, pressing the switch again will continue rear window demister operation, but the cycle will only last 5 minutes. The rear demist control system will function continuously if the vehicle speed is greater than 70 kilometres per hour (45 mph).

&#169© Copyright Chevrolet. All rights reserved

Stationary Window Description

Most stationary windows, specifically windscreens, are retained to the body with adhesive which adheres the window to the body, increasing structural integrity. The re-installation of the windows with adhesive requires complete replacement of the adhesive bead, and is known as the full cut method. All stationary windows must use adhesive systems which meet GM Specification GM 3651G

© Copyright Chevrolet. All rights reserved

Special Tools

Illustration	Tool Number/ Description
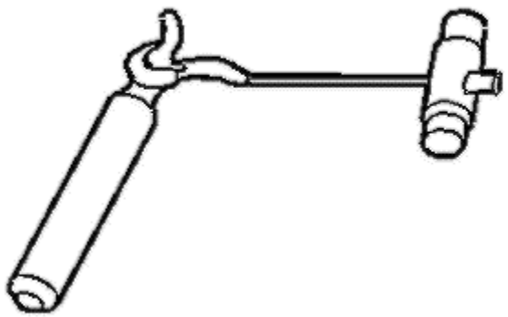	BO-24402-A J-24402-A Glass Sealant Cold Knife Remover
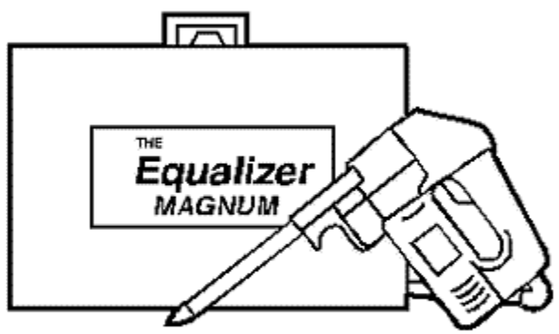	BO-39032 J-39032 Stationary Glass Removal Tool

	BO-39040 J-39040 Quarterlight Remover
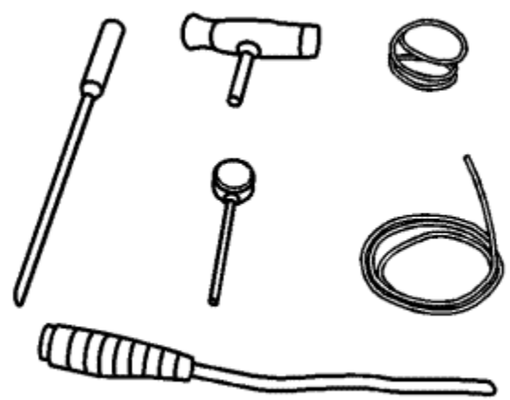	S-0201964 Bonded-Glass Removing Device Brazil - Use local equivalent

© Copyright Chevrolet. All rights reserved

Fastener Tightening Specifications

Application	Specification	
	Metric	English
Horn Nut	10 N·m	89 lb in
Steering Wheel Horn Contact Bolts	5.5 N·m	49 lb in

© Copyright Chevrolet. All rights reserved

Horn Schematics

Horns

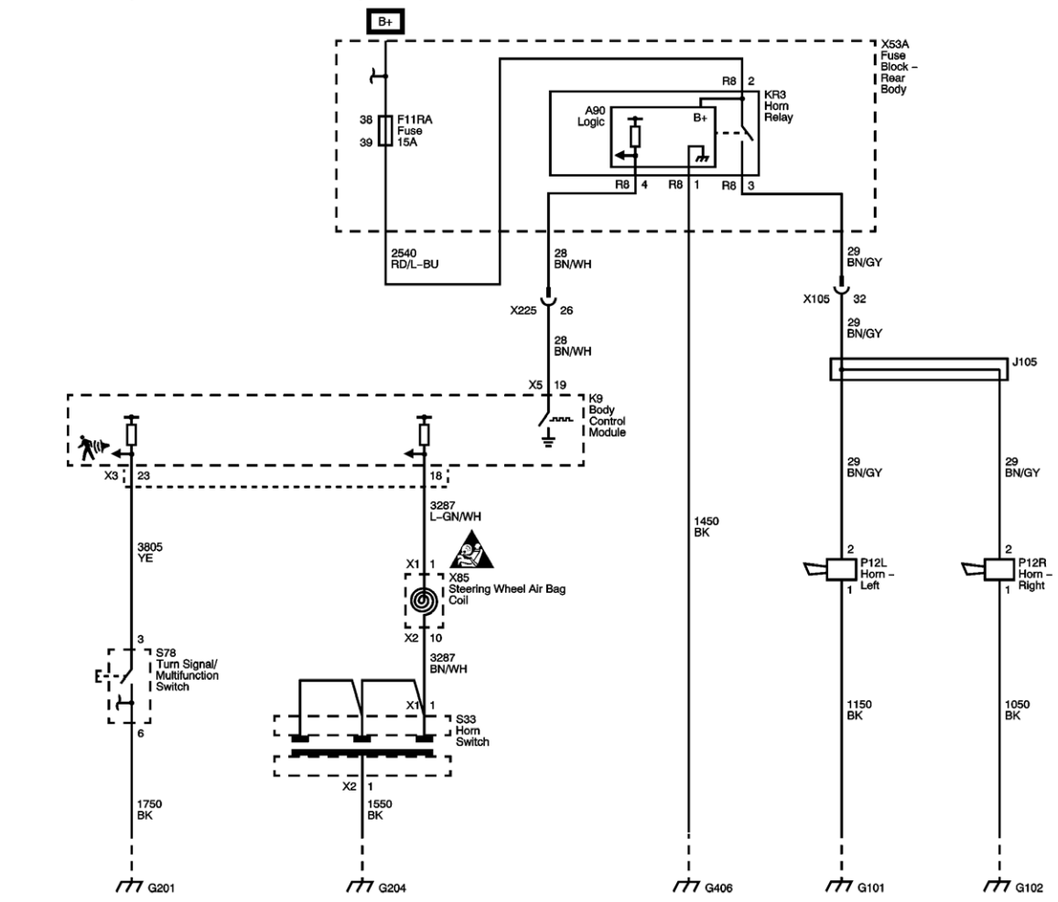

Master Electrical Component List

Horns System Description and Operation

F6RA, F11RA, F14RA and F16RA Fuses

Master Electrical Schematic Icons

G204

G301 and G406

G101 and G102

© Copyright Chevrolet. All rights reserved

DTC B2750

Diagnostic Instructions

- Perform the Diagnostic System Check - Vehicle prior to using this diagnostic procedure.
- Review Strategy Based Diagnosis for an overview of the diagnostic approach.
- Diagnostic Procedure Instructions provides an overview of each diagnostic category.

DTC Descriptors

DTC B2750 01: Horn Relay Coil Circuit Short to Battery

DTC B2750 02: Horn Relay Coil Circuit Short to Ground

DTC B2750 04: Horn Relay Coil Circuit Open

Diagnostic Fault Information

Circuit	Short to Ground	Open/High Resistance	Short to Voltage	Signal Performance
Horn Relay Control	B2750 02	B2750 04	B2750 01	--
Horn Relay Ground	-	B2750 04	--	--

Circuit/System Description

The body control module (BCM) controls the horn relay by providing system voltage to the control circuit of the horn relay coil energising the relay. When the horn relay is energised, the horn relay contacts close applying voltage through the horn fuse and the horn control circuit to the horns.

Conditions for Running the DTC

The DTC can only set only when the output is actively being requested by the BCM.

Conditions for Setting the DTC

B2750 01

The BCM detects a short to voltage in the horn relay control circuit for approximately 125 milliseconds.

B2750 02

The BCM detects a short to ground in the horn relay control circuit for approximately 125 milliseconds.

B2750 04

The BCM detects an open/high resistance in the horn relay control circuit for approximately 125 milliseconds.

Action Taken When the DTC Sets

B2750 02

The horns will sound continuously until the horns are disconnected or when the horns overheat and becomes inoperative

B2750 01, B2750 04

The horns will be inoperative.

Conditions for Clearing the DTC

- The DTC clears when the fault is no longer detected.
- The current DTC will become history when the request for the output is removed.
- The history DTC will clear after 50 consecutive fault-free ignition cycles have occurred.

Reference Information

Schematic Reference

Horn Schematics

Connector End View Reference

Component Connector End Views

Description and Operation

Horns System Description and Operation

Electrical Information Reference

- Circuit Testing
- Connector Repairs
- Testing for Intermittent Conditions and Poor Connections
- Wiring Repairs

Scan Tool Reference

Control Module References for scan tool information

Circuit/System Verification

Vehicle in Service Mode, command the Horn Relay ON and OFF with the scan tool. The horns should turn ON and OFF when changing between the commanded states.

Circuit/System Testing

1. Vehicle OFF, disconnect the KR3 horn relay.
2. Test for less than 10 Ω between the ground circuit terminal 6 and ground
   If greater than the specified range, test the ground circuit for an open/high resistance
3. Connect a test lamp between the control circuit terminal 5 and the ground circuit terminal 6.
4. Vehicle in Service Mode, command the Horn Relay ON and OFF with a scan tool. The test lamp should turn ON and OFF when changing between the commanded states.
   If the test lamp is always ON, test the control circuit for a short to voltage. If the circuit tests normal, replace the K9 BCM
   If the test lamp is always OFF, test the control circuit for a short circuit to voltage or open/high resistance. If the circuit tests normal, replace the K9 BCM.
5. If all circuits test normal, test or replace the KR3 horn relay.

Repair Instructions

Perform the Diagnostic Repair Verification after completing the diagnostic procedure.

- Relay Replacement : Within an Electrical Centre → Attached to Wire Harness
- Control Module References for BCM replacement, programming and setup

&#169© Copyright Chevrolet. All rights reserved

Symptoms - Horns

Important: The following steps must be completed before using the symptom tables:

1. Perform Diagnostic System Check - Vehicle , before using the symptom tables in order to verify that all of the following are true:
   - There are no DTCs set
   - The control modules can communicate via the serial data link
2. Review the system operation in order to familiarise yourself with the system functions. Refer to Horns System Description and Operation .

Visual/Physical Inspection

- Inspect for aftermarket devices which could affect the operation of the horn system. Refer to Checking Aftermarket Accessories .
- Inspect the easily accessible or visible system components for obvious damage or conditions which could cause the symptom.
- Perform the following if a horn buzzes or has a harsh tone.
  - Inspect for debris in the joint where the horn fastens to the vehicle.
  - Test the torque of the horn mounting hardware. The horn mounting hardware should be tightened to a torque of 10 N·m (7 lb ft).

Intermittent

Faulty electrical connections or wiring may be the cause of intermittent conditions. Refer to Testing for Intermittent Conditions and Poor Connections .

Symptom List

Refer to a symptom diagnostic procedure Horns Malfunction in order to diagnose the symptom.

&#169© Copyright Chevrolet. All rights reserved

Horns Malfunction

Diagnostic Instructions

- Perform the Diagnostic System Check - Vehicle prior to using this diagnostic procedure.
- Review Strategy Based Diagnosis for an overview of the diagnostic approach.
- Diagnostic Procedure Instructions provides an overview of each diagnostic category.

Diagnostic Fault Information

Circuit	Short to Ground	Open/High Resistance	Short to Voltage	Signal Performance
Horn Relay B+	2	2	--	--
Horn Switch Signal	1	2	2	--
Predestrian Friendly Alert Switch Signal	3	3	3	--
Horn Relay Control	B2750 02	B2750 04	B2750 01	--
Horn Control	2	2	1	--
Horn Switch Ground	--	2	--	--
Horn Ground	--	2	--	--
Horn Relay Ground	-	B2750 04	--	--

1. Horn Always On

2. Horn Inoperative

3. Predestrian Friendly Alert Malfunction

Circuit/System Description

Battery positive voltage is applied at all times to the horn relay coil and the horn relay switch. Pressing the horn switch provides system voltage to the switch contacts and the horn relay control circuit to the coil side of the relay, energising the relay. Battery voltage is then applied through the switch side of the relay, the horn fuse, and the horn control circuit to the horns. The body control module (BCM) may also apply system voltage to the horn relay control circuit as described above. The horns sound as long as ground is applied to the horn relay control circuit.

Diagnostic Aids

A short to ground in the HORN relay control circuit or a short to voltage in the horn control circuit will cause the horns to sound continuously until the horns overheat and become inoperative.

Rotate the steering wheel while pressing the horn pad to identify intermittent and poor connections within the steering column.

If diagnosing a Horn- Poor Tone condition, inspect the following:

- Debris or water in the horn assembly.
- Proper horn mounting hardware torque. Refer to Fastener Tightening Specifications .
- Debris in the joint where the horns attach to the vehicle.
- Debris in direct contact with the horn.
- Vehicle components vibrating while the horn is sounding.

Reference Information

Schematic Reference

Horn Schematics

Connector End View Reference

Component Connector End Views

Description and Operation

Horns System Description and Operation

Electrical Information Reference

- Circuit Testing
- Connector Repairs
- Testing for Intermittent Conditions and Poor Connections
- Wiring Repairs

Scan Tool Reference

Control Module References for scan tool information

Circuit/System Verification

1. Command the horns ON and OFF with the scan tool, the P12 horns should turn ON and OFF when changing between the commanded states.
   If the P12 horns are always ON or always OFF, refer to Horns or Horn Command Malfunction.
   If the sound emitted from the P12 horns are not clear and even, refer to Horn - Poor Tone.
2. Observe the scan tool Horn Switch parameter while pressing and releasing the horn pad. The parameter should change from Inactive to Active.
   If the value does not change, refer to Horn Switch Malfunction.
3. Command the horns to sound the predestrian friendly alert function by pressing and releasing the predestrian friendly alert switch. The P12 horns should sound an 8 cycle horn chirp burst each time the switch is pressed.
   If the P12 horns do not perform as specified, refer to Predestrian Friendly Alert Switch Malfunction.

Circuit/System Testing

Horns or Horn Command Malfunction

1. Vehicle OFF, disconnect the KR3 horn relay.
2. Test for less than 10 Ω between the ground circuit terminal 6 and ground.
   If greater than the specified range, test the ground circuit for an open/high resistance.
3. Vehicle in Service Mode, verify that a test lamp does not illuminates between the control circuit terminal 4 and ground.
   If the test lamp illuminates, test the control circuit for a short to voltage.
4. Verify that a test lamp illuminates between the B+ circuit terminal 2 and ground.
   If the test lamp does not illuminate, test the B+ circuit for a short to ground or an open/high resistance. If the circuit tests normal and the B+ circuit fuse is open, test the control circuit terminal 4 for a short to ground.
5. Vehicle OFF, disconnect the harness connector at the P12 horn.
6. Vehicle OFF, test for less than 10 Ω between the ground circuit terminal 1 and ground
   If greater than the specified range, test the ground circuit for an open/high resistance.
7. Connect the harness connector at the P12 horn.
8. Vehicle in Service Mode, connect a 15 A fused jumper wire between the B+ circuit terminal 2 and the control circuit terminal 4. Verify the P12 horn is activated.
   If the P12 horn does not activate, test the control circuit for an open/high resistance. If the circuit tests normal, test or replace the P12 horn.
9. Connect a test lamp between the control circuit terminal 5 and the B+ circuit terminal 2.
10. Command the Horn Relay ON and OFF with a scan tool. The test lamp should turn ON and OFF when changing between the commanded states.
    If the test lamp is always ON, test the control circuit for a short to ground. If the circuit tests normal, replace the K9 BCM.
    If the test lamp is always OFF, test the control circuit for a short to voltage or an open/high resistance. If the circuit tests normal, replace the K9 BCM.
11. If all circuits test normal, test or replace the KR3 horn relay.

Horn - Poor Tone

1. Vehicle OFF, disconnect the harness connector at the appropriate P12 horn.

2. Test for less than 1 Ω between the ground circuit terminal 1 and ground.
   If greater than the specified range, test the ground circuit for a high resistance.
3. Disconnect the KR3 horn relay.
4. Test for less than 1 Ω between the control circuit terminal 4 at the KR3 horn relay and the control circuit terminal 2 at the P12 horn.
   If greater than the specified range, test the control circuit for high resistance.
5. If all circuits test normal, test or replace the P12 horn.

Horn Switch Malfunction

1. Vehicle OFF, disconnect the X2 harness connector at the S33 horn switch.
2. Test for less than 10 Ω between the ground circuit terminal 1 and ground.
   If greater than the specified range, test the ground circuit for an open/high resistance.
3. Disconnect the X1 harness connector at the S33 horn switch.
4. Vehicle in Service Mode, test for greater than 10 V between the signal circuit terminal 1 and ground.
   If less than the specified value, test the signal circuit for a short to ground or an open/high resistance. If the circuit tests normal, replace the K9 BCM.
5. If all circuits test normal, test or replace the S33 horn switch.

Predestrian Friendly Alert Switch Malfunction

1. Vehicle OFF, disconnect the harness connector at the S78 indicator/multifunction switch.
2. Vehicle in Service Mode, test for greater than 10 V between the signal circuit terminal 3 and ground.
   If less than the specified value, test the signal circuit for a short to ground or an open/high resistance. If the circuit tests normal, replace the K9 BCM.
3. If all circuits test normal, test or replace the S78 indicator/multifunction switch.

Component Testing

Horn Test

1. Vehicle OFF, disconnect the harness connector at the appropriate P12 horn.
2. Install a 15 A fused jumper wire between the control terminal 2 and 12 V. Install a jumper wire between the ground terminal 1 and ground. Verify the horn emits a clear and even tone.
   If the sound emitted is not clear and even, replace the P12 horn.

Repair Instructions

Perform the Diagnostic Repair Verification after completing the diagnostic procedure.

- Relay Replacement : Within an Electrical Centre → Attached to Wire Harness
- Steering Wheel Horn Contact Replacement

- Horn Replacement
- Indicator Multifunction Switch Replacement
- Control Module References for BCM replacement, programming and setup

&#169© Copyright Chevrolet. All rights reserved

Horn Replacement

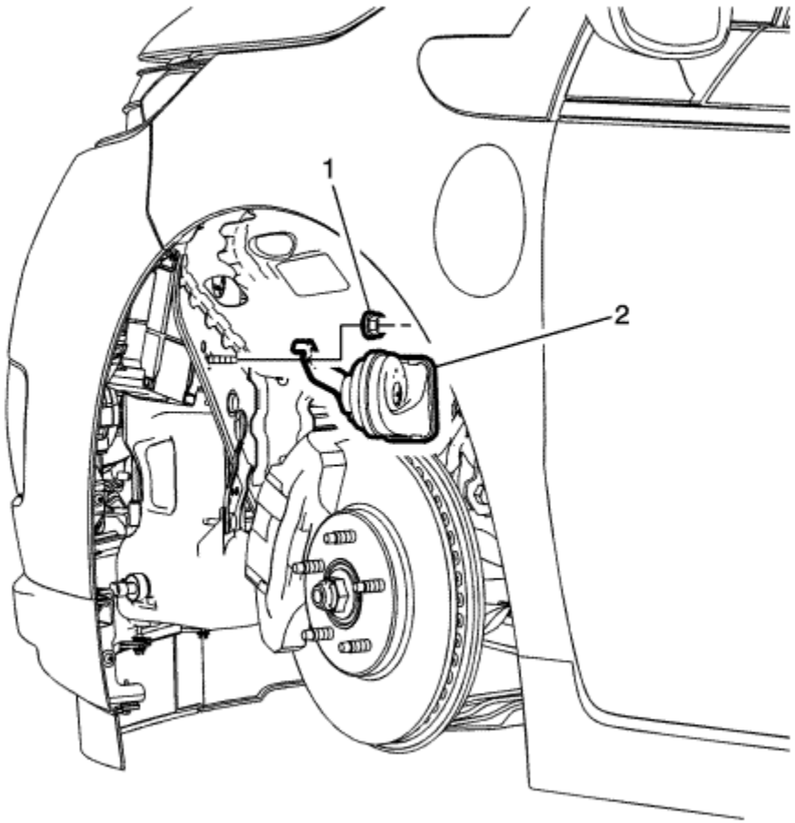

Callout	Component Name
Preliminary Procedure Remove the front wheelhouse front liner. Refer to Front Wheelhouse Front Liner Replacement .	
	Horn Nut

1	**Caution:** Refer to Fastener Caution in the Preface section. **Tighten** 10 N·m (89 lb in)
2	Horn **Tip** Left side shown, right side similar. **Procedure** Disconnect the electrical connector.

© Copyright Chevrolet. All rights reserved

Steering Wheel Horn Contact Replacement

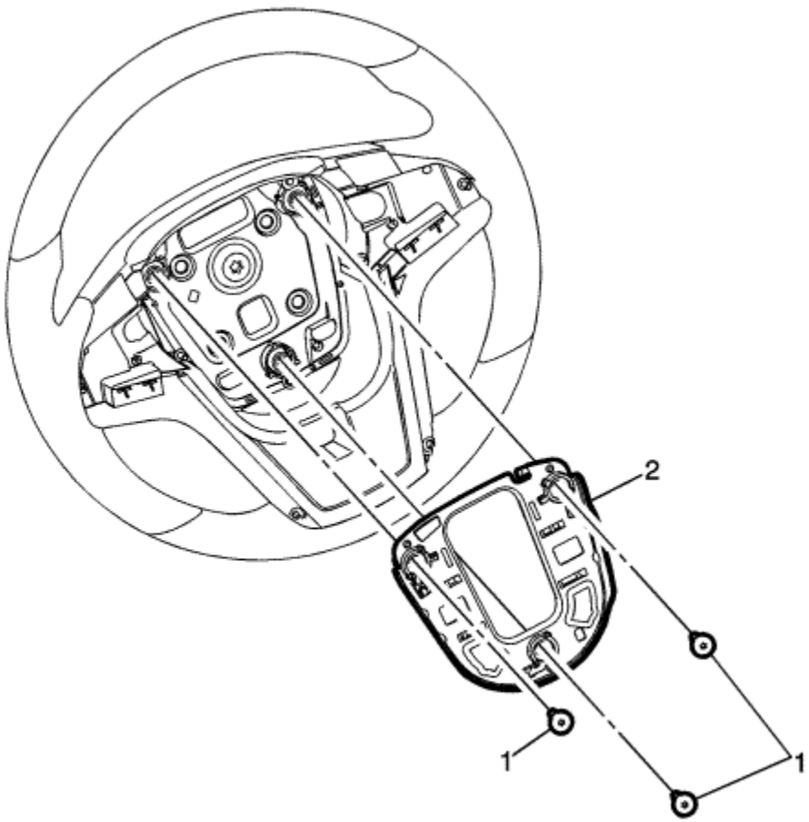

Callout	Component Name
Preliminary Procedure Remove the steering wheel inflatable restraint module. Refer to Steering Wheel Airbag Coil Replacement .	
	Steering Wheel Horn Contact Spring Retainer Bolt (Qty: 3)

1	**Caution:** Refer to Fastener Caution in the Preface section. **Tighten** 5.5 N·m(49 lb in)
2	Steering Wheel Horn Contact Assembly **Procedure** Disconnect the electrical connectors.

© Copyright Chevrolet. All rights reserved

Horns System Description and Operation

System Description

The horn system consists of the following components:

- 15 A fuse
- Horn relay
- Horn switch
- Indicator multifunction switch
- Left and right horns
- Body control module (BCM)

System Operation

- The vehicle horn is activated whenever the horn switch is depressed.
- When the Predestrian Friendly Alert System is activated by pressing a button on the end of the indicator/multifunction stalk.
- The BCM commands the horns ON under any of the following conditions:
  - When the content theft deterrent system detects a vehicle intrusion--For further information refer to Theft Systems Description and Operation .
  - When the keyless entry system is used to lock the vehicle, a horn chirp may sound to notify the driver that the vehicle has been locked. The notification feature may be enabled or disabled through personalisation. For further information refer to Keyless Entry System Description and Operation .
  - When the hybrid powertrain control module 2 begins charging the vehicle. For further information refer to Plug-In Charging System Description and Operation .
  - When the hybrid powertrain control module 2 detects that the vehicle charging has been interrupted for any reason before the vehicle is fully recharged. For further information refer to Plug-In Charging System Description and Operation
  - When the hybrid powertrain control module 2 detects a disconnect of the charge cord while the vehicle is locked. Refer to the appropriate section of the owner's manual for further information.

Horn Operation

Normal Horn Operation

The BCM controls the horn operation, when the horn switch is pressed, it closes a switch pulling the horn signal circuit low. When the BCM detects the drop in voltage in the horn switch signal circuit, it energises the horn relay which provides B+ voltage to the horn control circuit, sounding the horn.

When the vehicle is in the Off Power Mode the BCM will attempt to detect a stuck or continuously activated horn switch. When enabled, activation of the horn will be limited to 10 seconds to protect the horn from excessive use.

Predestrian Friendly Alert System

Extended Range Electric Vehicles (EREV) present a situation for visually impaired pedestrians who cannot hear an approaching EREV. The Predestrian Friendly Alert System offers the driver the ability to warn a visually impaired pedestrian, in a non-startling manner, that the vehicle is approaching. When the driver presses the predestrian friendly alert switch located on the end of the indicator/multifunction stalk, the BCM will command an 8 cycle horn chirp burst lasting 217.5 ms.

&#169© Copyright Chevrolet. All rights reserved

Fastener Tightening Specifications

Application	Specification	
	Metric	English
Reverse Lamp to Rear Bumper Fascia Bolt/Screw	2.5 N·m	22 lb in
Reverse Lamp to Rear Energy Absorber Bolt/Screw	2.5 N·m	22 lb in
Brake Pedal Position Sensor Bolt	9 N·m	80 lb in
Front Indicator Lamp Screw	2.5 N·m	22 lb in
Headlamp Bolt/Screw	2.5 N·m	22 lb in
High Mount Brake Lamp Screw	2.5 N·m	22 lb in
Rear Reflector Bolt	9 N·m	80 lb in
Tail Lamp Bolt/Screw	2.5 N·m	22 lb in
Tail Lamp Nut	4.7 N·m	42 lb in

© Copyright Chevrolet. All rights reserved

Headlamps/Daytime Running Lamps (DRL) Schematics

Figure 1: Daytime Running Lamps and Dipped Beams
Figure 2: Main Beam

© Copyright Chevrolet. All rights reserved

Exterior Lamps Schematics

Figure 1: Sidelight, Tail and Number Plate Lamps
Figure 2: Front Indicators and Controls
Figure 3: Rear Indicators, Brake Lamps, Rear Fog Lamp and Reverse Lamp

© Copyright Chevrolet. All rights reserved

Interior Lights Schematics

Interior Lights

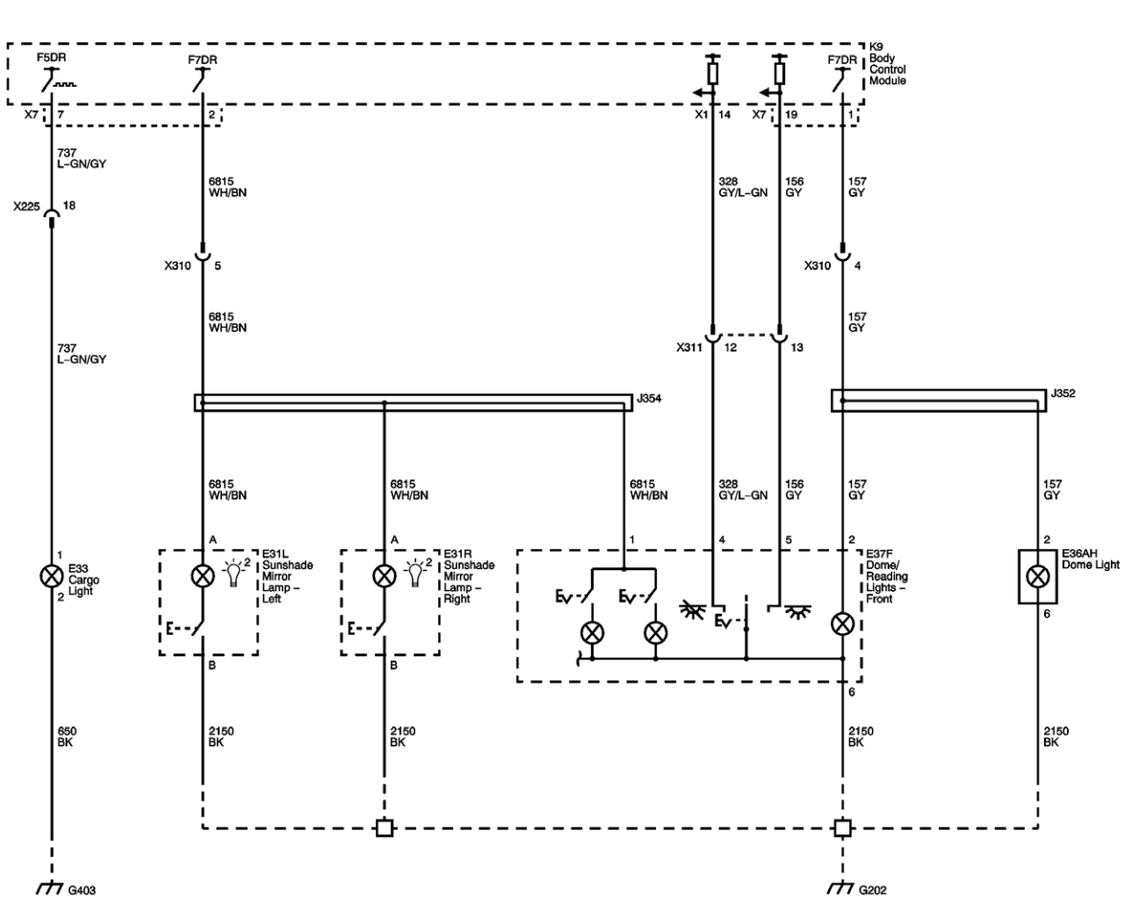

Master Electrical Component List

F4DR, F5DR, F6DR, F7DR, F8DR, F9DR, F10DR, F11DR and F12DR Fuses

202

© Copyright Chevrolet. All rights reserved

Interior Lights Dimming Schematics

Figure 1: Display Dimming
Figure 2: Controls Dimming

© Copyright Chevrolet. All rights reserved

DTC B1395

Diagnostic Instructions

- Perform the Diagnostic System Check - Vehicle prior to using this diagnostic procedure.
- Review Strategy Based Diagnosis for an overview of the diagnostic approach.
- Diagnostic Procedure Instructions provides an overview of each diagnostic category.

DTC Descriptors

DTC B1395 03: Control Module Voltage Reference Output 1 Circuit Low Voltage

DTC B1395 07: Control Module Voltage Reference Output 1 Circuit High Voltage

Diagnostic Fault Information

Circuit	Short to Ground	Open/High Resistance	Short to Voltage	Signal Performance
F10DL Fuse B+ Reference	C0890 03, B101E 43, B1395 03, B1517 07, U0121 00, U0128 00, U0422 71	C0890 03, B101E 43, B1395 03, B1517 07, U0121 00, U0128 00, U0422 71	--	--
Instrument Panel Dimmer Switch B+ Reference	B1395 03, B3600 03	B3600 03	1	--
Instrument Panel Dimmer Switch Signal	B3600 03	B3600 03	B3600 07, 1	-
Instrument Panel Dimmer Switch Low Reference	1	1	1	--
Driver Information Centre Switch Ground	--	1	--	--
1. Interior Backlighting Malfunction				

Circuit/System Description

The instrument panel dimmer switch is used to increase and decrease the brightness of the interior backlighting components. The instrument panel dimmer switch provides a voltage signal to the body control module (BCM) that will increase as the brightness of the lights are increased and decrease as the brightness of the lights are decreased. The body control module (BCM) provides a low reference, signal, and B+ voltage reference circuits to the instrument panel dimmer switch. When the instrument panel dimmer switch is placed in the desired position, the dimmed voltage setting is applied from the instrument panel dimmer switch through the instrument panel dimmer switch signal circuit to the BCM. The BCM interprets the signal and applies a pulse width modulated (PWM) voltage through the light emitting diode (LED) dimming control circuits illuminating the interior backlighting to the requested level of brightness.

Conditions for Running the DTC

- Battery voltage must be between 9-16 V.
- Park lamps ON.

Conditions for Setting the DTC

DTC B1395 03

- The BCM detects a short to ground in the instrument panel dimmer switch B+ reference circuit.
- The BCM detects a short to ground or an open/high resistance in the F10DL fuse B+ circuit.

DTC B1395 07

The BCM detects a short to voltage in the instrument panel dimmer switch B+ reference circuit.

Action Taken When the DTC Sets

The interior backlighting defaults to full bright.

Conditions for Clearing the DTC

- The condition responsible for setting the DTC no longer exists.
- A history DTC will clear once 100 consecutive malfunction-free vehicle ON/OFF switch cycles have occurred.

Diagnostic Aids

The instrument panel dimmer switch B+ reference circuit is a low current circuit that will not illuminate a test lamp.

Reference Information

Schematic Reference

- Interior Lights Dimming Schematics
- Body Control System Schematics

Connector End View Reference

Component Connector End Views

Description and Operation

Interior Lighting Systems Description and Operation

Electrical Information Reference

- Circuit Testing
- Connector Repairs
- Testing for Intermittent Conditions and Poor Connections
- Wiring Repairs

Scan Tool Reference

Control Module References for scan tool information

Circuit/System Testing

1. Vehicle OFF, disconnect the harness connector at the S16 Driver Information Centre Switch.
2. Vehicle in Service Mode, verify that a test lamp illuminates between B+ and the low reference circuit terminal 12.
   If the test lamp does not illuminate, test the low reference circuit for a short to voltage or an open/high resistance.
3. Test for B+ between the B+ reference circuit terminal 11 and ground.
   If less than the specified range, test the B+ reference circuit for a short to ground or an open/high resistance. If the circuit tests normal, replace the K9 Body Control Module.
4. Verify that a test lamp does not illuminate between the B+ reference circuit terminal 11 and ground.
   If the test lamp illuminates, test the B+ reference circuit for a short to voltage. If the circuit tests normal, replace the K9 Body Control Module.
5. Verify the scan tool LED Backlight Dimming Command parameter is greater than 40%.
   If less than the specified range, test the signal circuit terminal 10 for a short to voltage. If the circuit tests normal, replace the K9 Body Control Module.
6. Vehicle OFF, install a 3 A fused jumper wire between the B+ reference circuit terminal 11 and the signal circuit terminal 10.
7. Vehicle in Service Mode, verify the scan tool LED Backlight Dimming Command parameter is less than 40%.
   If greater than the specified range, test the signal circuit terminal 10 for a short to ground or an open/high resistance. If the circuit tests normal, replace the K9 Body Control Module.

8. If all circuits test normal, replace the S16 Driver Information Centre Switch.

Repair Instructions

Perform the Diagnostic Repair Verification after completing the diagnostic procedure.

- Driver Information Display and Multifunction Switch Replacement
- Control Module References for BCM replacement, programming and setup

&#169© Copyright Chevrolet. All rights reserved

DTC B1480

Diagnostic Instructions

- Perform the Diagnostic System Check - Vehicle prior to using this diagnostic procedure.
- Review Strategy Based Diagnosis for an overview of the diagnostic approach.
- Diagnostic Procedure Instructions provides an overview of each diagnostic category.

DTC Descriptor

DTC B1480 02: Battery Rundown Protection Circuit Short to Ground

Diagnostic Fault Information

Circuit	Short to Ground	Open/High Resistance	Short to Voltage	Signal Performance
F7DR (interior lamps) Fuse B+	B2545 01, B2545 04, B2615 02	B2545 01, B2545 04, B2615 02	--	--
Courtesy Lamp Control - Terminal 2 X7	B1480 02	1	1	--
Dome/Reading Lamps - Front Ground	--	1	--	--
Sun Visor - Left Ground	--	1	--	--
Sun Visor - Right Ground	--	1	--	--
1. Courtesy Lamps Malfunction				

Circuit/System Description

The body control module (BCM) supplies battery voltage to the dome/reading lamps - front and left and right sun visor lamps via the courtesy lamp control circuit. When a sun visor mirror is opened, the switch contact close allowing battery voltage to flow illuminating the respective lamps. The front reading lamps are controlled by individual switches that are activated by the operator when additional cabin lighting is required. In the event that any of these courtesy lamps were to remain illuminated for more than 10 min with the vehicle ON/OFF switch in the OFF position and no doors opened, the BCM will deactivate the courtesy lamp control circuit to prevent total battery discharge.

Conditions for Running the DTC

Battery voltage must be between 9-16 V.

Conditions for Setting the DTC

The BCM detects a short to ground in the courtesy lamp control circuit.

Action Taken When the DTC Sets

The BCM will disable the circuit and the sun visor lamps and front reading lamps will be inoperative.

Conditions for Clearing the DTC

- The condition responsible for setting the DTC no longer exists.
- A history DTC will clear once 100 consecutive malfunction-free vehicle ON/OFF switch cycles have occurred.

Diagnostic Aids

When the F7DR (interior lamps) fuse is open, both dome lamps, sun visor lamps, reading lamps, and reverse lamps will be inoperative. DTC B2545 will also set for the reverse lamps when the vehicle is placed in the reverse gear.

Reference Information

Schematic Reference

- Interior Lights Schematics
- Body Control System Schematics

Connector End View Reference

Component Connector End Views

Description and Operation

Interior Lighting Systems Description and Operation

Electrical Information Reference

- Circuit Testing
- Connector Repairs

- Testing for Intermittent Conditions and Poor Connections
- Wiring Repairs

Scan Tool Reference

Control Module References for scan tool information

Circuit/System Testing

Note: Each courtesy lamp component may need to be disconnected to isolate a short to voltage or a short to ground. Use the schematic to identify the following:

- Each components control and ground circuit terminals
- Courtesy lamp components the vehicle is equipped with
- Component locations on the courtesy lamp control circuit

1. Vehicle OFF, disconnect the harness connector at any component with inoperative courtesy lamps.
2. Connect a test lamp between the appropriate control circuit terminal listed below and ground:
   - E37F Dome/Reading Lamps - Front terminal 1
   - E31L Sun Visor Mirror Lamp - Left terminal A
   - E31R Sun Visor Mirror Lamp - Right terminal A
3. Vehicle in Service Mode, command the Inadvertent Load ON and OFF with a scan tool. The test lamp should turn ON and OFF when changing between the commanded states.
   If the test lamp is always ON, test the control circuit for a short to voltage. If the circuit tests normal, replace the K9 Body Control Module.
   If the test lamp is always OFF, test the control circuit for a short to ground or open/high resistance. If the circuit tests normal, replace the K9 Body Control Module.
4. If all circuits test normal, replace the inoperative courtesy lamp.

Repair Instructions

Perform the Diagnostic Repair Verification after completing the diagnostic procedure.

- Sun Visor Illuminated Mirror Lamp Bulb Replacement
- Dome and Reading Lamp Replacement
- Control Module References for BCM replacement, programming and setup

&#169© Copyright Chevrolet. All rights reserved

DTC B2545

Diagnostic Instructions

- Perform the Diagnostic System Check - Vehicle prior to using this diagnostic procedure.
- Review Strategy Based Diagnosis for an overview of the diagnostic approach.
- Diagnostic Procedure Instructions provides an overview of each diagnostic category.

DTC Descriptors

DTC B2545 01: Reverse Lamps Circuit Short to Battery

DTC B2545 02: Reverse Lamps Circuit Short to Ground

DTC B2545 04: Reverse Lamps Circuit Open

Diagnostic Fault Information

Circuit	Short to Ground	Open/High Resistance	Short to Voltage	Signal Performance
F7DR (interior lamps) Fuse B+	B2545 01, B2545 04, B2615 02	B2545 01, B2545 04, B2615 02	--	--
Reverse Lamp Control	B2545 02	B2545 01, B2545 04	1	--
Reverse Lamp Ground	--	1	--	--
1. Reverse Lamps Malfunction				

Circuit/System Description

With the vehicle ON and the transmission in the REVERSE position, the transmission control module (TCM) sends a serial data message to the body control module (BCM). The message indicates that the gear selector is in the REVERSE position. The BCM applies battery voltage to the reverese lamp control circuit illuminating the reverse lamps. Once the driver moves the gear selector out of the REVERSE position, a message is sent by the TCM via serial data requesting the BCM to remove battery voltage from the reverse lamps control circuit. The engine must be ON for the reverse lamps to operate.

Conditions for Running the DTC

- Vehicle ON.
- Transmission in REVERSE gear.

Conditions for Setting the DTC

DTC B2545 01 and B2545 04

- The BCM detects an open/high resistance in the reverse lamp control circuit.
- The BCM detects a short to ground or an open/high resistance in the F7DR fuse B+ circuit.

DTC B2545 02

The BCM detects a short to ground in the reverse lamp control circuit.

Action Taken When the DTC Sets

The reverse lamp will not operate.

Conditions for Clearing the DTC

- The condition responsible for setting the DTC no longer exists.
- A history DTC will clear once 100 consecutive malfunction free vehicle ON/OFF switch cycles have occurred.

Reference Information

Schematic Reference

- Exterior Lamps Schematics
- Body Control System Schematics

Connector End View Reference

Component Connector End Views

Description and Operation

Exterior Lighting Systems Description and Operation

Electrical Information Reference

- Circuit Testing
- Connector Repairs
- Testing for Intermittent Conditions and Poor Connections
- Wiring Repairs

Scan Tool Reference

Control Module References for scan tool information

Circuit/System Testing

1. Vehicle OFF, disconnect the X5 harness connector at the K9 Body Control Module.
2. Vehicle in Service Mode, verify that a test lamp illuminates between the B+ circuit terminal 4 and ground.
   If the test lamp does not illuminate, test the B+ circuit for a short to ground or an open/high resistance.
3. Vehicle OFF, connect the X5 harness connector at the K9 Body Control Module.
4. Disconnect the harness connector at the E5 Reverse Lamp.
5. Vehicle OFF, exterior lamps OFF, test for less than 5 Ω between the ground circuit terminal B and ground.
   If greater than the specified range, test the ground circuit for an open/high resistance.
6. Connect a test lamp between the control circuit terminal A and ground.
7. Vehicle in Service Mode, command the Reverse Lamps ON and OFF with a scan tool. The test lamp should turn ON and OFF when changing between the commanded states.
   If the test lamp is always ON, test the control circuit for a short to voltage. If the circuit tests normal, replace the K9 Body Control Module.
   If the test lamp is always OFF, test the control circuit for a short to ground or an open/high resistance. If the circuit tests normal, replace the K9 Body Control Module.
8. If all circuits test normal, replace the E5 Reverse Lamp.

Repair Instructions

Perform the Diagnostic Repair Verification after completing the diagnostic procedure.

- Reverse Lamp Bulb Replacement
- Control Module References for BCM replacement, programming and setup

&#169© Copyright Chevrolet. All rights reserved

DTC B257A

Diagnostic Instructions

- Perform the Diagnostic System Check - Vehicle prior to using this diagnostic procedure.
- Review Strategy Based Diagnosis for an overview of the diagnostic approach.
- Diagnostic Procedure Instructions provides an overview of each diagnostic category.

DTC Descriptor

DTC B257A 00: Headlamp Switch Input Signals Correlation Malfunction

Diagnostic Fault Information

Circuit	Short to Ground	Open/High Resistance	Short to Voltage	Signal Performance
Indicator/Multifunction Switch Sidelights ON Signal	2	B257A 00	2	--
Indicator/Multifunction Switch Headlamps OFF Signal	B257A 00	1	1	--
Indicator/Multifunction Switch Headlamps ON Signal	B257A 00	1	1	--
Indicator/Multifunction Switch Ground	--	1	--	--
1. Headlamps Malfunction 2. Sidelight, Number Plate, and/or Tail Lamps Malfunction				

Circuit/System Description

For headlamp operation, the body control module (BCM) monitors three signal circuits from the indicator/multifunction switch. When the indicator/multifunction switch is in the AUTO position, the three signal circuits are open and the BCM relies on the ambient light sensor input to turn the headlamps and daytime running lamps (DRL) ON and OFF. When the indicator/multifunction switch is placed in the OFF position, the indicator/multifunction switch headlamps OFF signal circuit is grounded, indicating to the BCM that the exterior lamps should be turned OFF. With the indicator/multifunction switch in the sidelights position, the indicator/multifunction switch sidelights ON signal circuit is grounded, indicating that the sidelights have been requested. When the indicator/multifunction switch is in the headlamp position, both the indicator/multifunction switch sidelights ON signal circuit and the indicator/multifunction switch headlamps ON signal circuit are grounded. The BCM responds by commanding the sidelights and headlamps ON.

Conditions for Running the DTC

Battery voltage must be between 9-16V.

Conditions for Setting the DTC

- The BCM detects an open/high resistance in the indicator/multifunction switch sidelights ON signal circuit.
- The BCM detects a short to ground in the indicator/multifunction switch headlamps ON signal circuit.
- The BCM detects a short to ground in the indicator/multifunction switch headlamps OFF signal circuit.

Action Taken When the DTC Sets

- When DTC B257A 00 is present on the indicator/multifunction switch headlamps OFF signal circuit, the dipped beam headlamps are always ON in the AUTO position. The indicator/multifunction switch operates in all positions other than AUTO. The AUTO headlamp defeat is inoperative.
- When DTC B257A 00 is present on the indicator/multifunction switch headlamps ON signal circuit, the dipped beam headlamps are always ON. The BCM disregards all indicator/multifunction switch inputs.
- When DTC B257A 00 is present on the indicator/multifunction switch sidelights ON signal circuit, the sidelights and dipped beam headlamps are inoperative in the SIDELIGHTS and headlamps positions. Headlamps and sidelights operate in AUTO position.

Conditions for Clearing the DTC

- The condition responsible for setting the DTC no longer exists.
- A history DTC will clear once 100 consecutive malfunction free vehicle ON/OFF switch cycles have occurred.

Reference Information

Schematic Reference

Headlamps/Daytime Running Lamps (DRL) Schematics

Connector End View Reference

Component Connector End Views

Description and Operation

Exterior Lighting Systems Description and Operation

Electrical Information Reference

- Circuit Testing
- Connector Repairs
- Testing for Intermittent Conditions and Poor Connections
- Wiring Repairs

Scan Tool Reference

Control Module References for scan tool information

Circuit/System Testing

1. Vehicle OFF, disconnect the harness connector at the S78 Indicator/Multifunction Switch.
2. Vehicle OFF, all doors closed, all accessories OFF, and wait 2 minutes. Test for less than 10 Ω between the ground circuit terminal 6 and ground.
   If greater then the specified range, test the ground circuit for an open/high resistance.
3. Vehicle in Service Mode, verify the scan tool Automatic Headlamps Disable Switch parameter is Inactive.
   If not the specified value, test the signal circuit terminal 9 for a short to ground. If the circuit tests normal, replace the K9 Body Control Module.
4. Verify the scan tool Sidelights Switch parameter is Inactive.
   If not the specified value, test the signal circuit terminal 7 for a short to ground. If the circuit tests normal, replace the K9 Body Control Module.
5. Verify the scan tool Headlamps On Switch parameter is Inactive.
   If not the specified value, test the signal circuit terminal 2 for a short to ground. If the circuit tests normal, replace the K9 Body Control Module.
6. Install a 3 A fused jumper wire between the signal circuit terminal 9 and ground. Verify the scan tool Automatic Headlamps Disable Switch parameter is Active.
   If not the specified value, test the signal circuit for a short to voltage or an open/high resistance. If the circuit tests normal, replace the K9 Body Control Module.
7. Install a 3 A fused jumper wire between the signal circuit terminal 7 and ground. Verify the scan tool Sidelights Switch parameter is Active.
   If not the specified value, test the signal circuit for a short to voltage or an open/high resistance. If the circuit tests normal, replace the K9 Body Control Module.
8. Install a 3 A fused jumper wire between the signal circuit terminal 2 and ground. Verify the scan tool Headlamps On Switch parameter is Active.
   If not the specified value, test the signal circuit for a short to voltage or an open/high resistance. If the circuit tests normal, replace the K9 Body Control Module.
9. If all circuits test normal, replace the S78 Indicator/Multifunction Switch.

Repair Instructions

Perform the Diagnostic Repair Verification after completing the diagnostic procedure.

- Indicator Multifunction Switch Replacement
- Control Module References for BCM replacement, programming and setup

&#169© Copyright Chevrolet. All rights reserved

DTC B2580

Diagnostic Instructions

- Perform the Diagnostic System Check - Vehicle prior to using this diagnostic procedure.
- Review Strategy Based Diagnosis for an overview of the diagnostic approach.
- Diagnostic Procedure Instructions provides an overview of each diagnostic category.

DTC Descriptors

DTC B2580 01: Main Beam Control Circuit Short to Battery

DTC B2580 02: Main Beam Control Circuit Short to Ground

DTC B2580 04: Main Beam Control Circuit Open

Diagnostic Fault Information

Circuit	Short to Ground	Open/High Resistance	Short to Voltage	Signal Performance
Headlamp Main Beam Relay Control	B2580 02, B2580 04	B2580 02, B2580 04	B2580 01	--
Headlamp Main Beam Control - Left	1	1	1	--
Headlamp Main Beam Control - Right	1	1	1	--
Headlamp Ground - Left	--	1	--	--
Headlamp Ground - Right	--	1	--	--
1. Headlamps Malfunction				

Circuit/System Description

When the dipped beam headlamps are on and the indicator/multifunction switch is placed in the main beam position, ground is applied to the body control module (BCM) through the main beam signal circuit. The BCM responds to the main beam request by applying ground to the main beam relay control circuit which energises the headlamp main beam relay. With the main beam relay energised, the switch contacts close allowing battery voltage to flow through the main beam fuses to the main beam control

circuits illuminating the main beam headlamps.

Conditions for Running the DTC

- Battery voltage must be between 9-16 V.
- Main beam headlamps ON.

Conditions for Setting the DTC

DTC B2580 01

The BCM detects a short to voltage in the headlamp main beam relay control circuit.

DTC B2580 02 and B2580 04

The BCM detects a short to ground or an open/high resistance in the headlamp main beam control circuit.

Action Taken When the DTC Sets

- For an open/high resistance fault, the main beam headlamps and flash to pass function are inoperative. The main beam indicator on the instrument cluster operates normally.
- For a short to ground fault, the main beam headlamps and main beam indicator on the instrument cluster are always ON with the headlamp switch in the AUTO or headlamps positions.
- For a short to voltage fault, the main beam headlamps and flash to pass function are inoperative.

Conditions for Clearing the DTC

- The condition responsible for setting the DTC no longer exists.
- A history DTC will clear once 100 consecutive malfunction free vehicle ON/OFF switch cycles have occurred.

Reference Information

Schematic Reference

Exterior Lamps Schematics

Connector End View Reference

Component Connector End Views

Description and Operation

Exterior Lighting Systems Description and Operation

Electrical Information Reference

- Circuit Testing
- Connector Repairs
- Testing for Intermittent Conditions and Poor Connections
- Wiring Repairs

Scan Tool Reference

Control Module References for scan tool information

Circuit/System Testing

1. Vehicle OFF, disconnect the X1 harness connector at the X50A Fuse Block - Under-bonnet.
2. Connect a test lamp between the control circuit terminal 18 and B+.
3. Vehicle in Service Mode, command the Main Beams ON and OFF with a scan tool. The test lamp should turn ON and OFF when changing between the commanded states.
   If the test lamp is always ON, test the control circuit for a short to ground. If the circuit tests normal, replace the K9 Body Control Module.
   If the test lamp is always OFF, test the control circuit for a short to voltage or an open/high resistance. If the circuit tests normal, replace the K9 Body Control Module.
4. If all circuits test normal, replace the X50A Fuse Block - Under-bonnet.

Repair Instructions

Perform the Diagnostic Repair Verification after completing the diagnostic procedure.

- Accessory Wiring Junction Block Replacement
- Control Module References for BCM replacement, programming and setup

&#169© Copyright Chevrolet. All rights reserved

DTC B2585 or B3867

Diagnostic Instructions

- Perform the Diagnostic System Check - Vehicle prior to using this diagnostic procedure.
- Review Strategy Based Diagnosis for an overview of the diagnostic approach.
- Diagnostic Procedure Instructions provides an overview of each diagnostic category.

DTC Descriptors

DTC B2585 01: Sidelights Control Circuit Short to Battery

DTC B2585 02: Sidelights Control Circuit Short to Ground

DTC B2585 04: Sidelights Control Circuit Open

DTC B3867 01: Right Sidelight Control Circuit Short to Battery

DTC B3867 02: Right Sidelight Control Circuit Short to Ground

DTC B3867 04: Right Sidelight Control Circuit Open

Diagnostic Fault Information

Circuit	Short to Ground	Open/High Resistance	Short to Voltage	Signal Performance
Sidelights Control	B2585 02	B2585 04	B2585 01	-
Right Sidelight Control	B3867 02	B3867 04	B3867 01	--

Circuit/System Description

The body control module (BCM) energises the sidelights by applying voltage to the sidelight control circuit. When the sidelight control circuit is energised the sidelights are illuminated.

Conditions for Running the DTC

B2585 01

The sidelights are turned OFF.

B2585 02 or B2585 04

The sidelights are turned ON

B3867 01

- The vehicle is OFF.
- Headlamp switch in OFF or AUTO position.

B3867 02 or B3867 04

Headlamp switch in sidelight or dipped beam position.

Conditions for Setting the DTC

B2585 01 or B3867 01

The BCM detects a short to voltage on the control circuit.

B2585 02 or B3867 02

The BCM detects a short to ground on the control circuit.

B2585 04 or B3867 04

The BCM detects an open control circuit.

Action Taken When the DTC Sets

The sidelights are inoperative.

Conditions for Clearing the DTC

The condition for setting the DTC is not longer present.

Reference Information

Schematic Reference

Exterior Lamps Schematics

Connector End View Reference

Component Connector End Views

Description and Operation

Exterior Lighting Systems Description and Operation

Electrical Information Reference

- Circuit Testing
- Connector Repairs
- Testing for Intermittent Conditions and Poor Connections
- Wiring Repairs

Scan Tool Reference

Control Module References for scan tool information

Circuit/System Verification

Vehicle in Service Mode, perform the appropriate Tail Lamp test. The appropriate sidelight should be ON/OFF

Circuit/System Testing

DTC B2585

1. Vehicle OFF, disconnect the X2 harness connector at the K9 Body Control Module.
2. Verify that a test lamp illuminates between the B+ circuit terminal 3 X2 and ground.
   If the test lamp does not illuminate, test the B+ circuit for a short to ground or an open/high resistance.

3. Connect the harness connector at the K9 Body Control Module and disconnect the harness connector at the appropriate inoperative tail lamp.
4. Test for less than 5 Ω between the appropriate tail lamp ground circuit harness connector listed below and ground.
   - E4J Sidelight - Left Front harness connector terminal 1
   - E5AA Tail/Brake Lamp - Left harness connector terminal 3
   - E5E Tail Lamp - Left harness connector terminal 2

   If greater than the specified value, test the ground circuit for an open/high resistance.
5. Connect a test lamp between the appropriate tail lamp control circuit harness connector listed below and ground.
   - E4J Sidelight - Left Front harness connector terminal 2
   - E5AA Tail/Brake Lamp - Left harness connector terminal 2
   - E5E Tail Lamp - Left harness connector terminal 1
6. Command the appropriate Tail Lamp test ON and OFF with a scan tool. The test lamp should turn ON and OFF when changing between the commanded states.
   If the test lamp is always ON, test the control circuit for a short to voltage. If the circuit tests normal, replace the K9 Body Control Module.
   If the test lamp is always OFF, test the control circuit for a short to ground or an open/high resistance. If the circuits test normal, replace the K9 Body Control Module.
7. If all the circuits test normal, replace the appropriate inoperative tail lamp.

DTC B3867

1. Vehicle OFF, disconnect the X1 harness connector at the K9 Body Control Module.
2. Verify that a test lamp illuminates between the B+ circuit terminal 4 X1 and ground.
   If the test lamp does not illuminate, test the B+ circuit for a short to ground or an open/high resistance.
3. Connect the harness connector at the K9 Body Control Module and disconnect the harness connector at the appropriate inoperative tail lamp.
4. Test for less than 5 Ω between the appropriate tail lamp ground circuit harness connector listed below and ground.
   - E4K Sidelight - Right Front harness connector terminal 1
   - E5AB Tail/Brake Lamp - Right harness connector terminal 3
   - E5F Tail Lamp - Right harness connector terminal 2

   If greater than the specified value, test the ground circuit for an open/high resistance.
5. Connect a test lamp between the appropriate tail lamp control circuit harness connector listed below and ground.
   - E4K Sidelight - Right Front harness connector terminal 2
   - E5AB Tail/Brake Lamp - Right harness connector terminal 2
   - E5F Tail Lamp - Right harness connector terminal 1
6. Command the appropriate Tail Lamp test ON and OFF with a scan tool. The test lamp should turn ON and OFF when changing between the commanded states.
   If the test lamp is always ON, test the control circuit for a short to voltage. If the circuit tests normal, replace the K9 Body Control Module.
   If the test lamp is always OFF, test the control circuit for a short to ground or an open/high resistance. If the circuits test normal, replace the K9 Body Control Module.
7. If all the circuits test normal, replace the appropriate inoperative tail lamp.

Repair Instructions

Perform the Diagnostic Repair Verification after completing the diagnostic procedure.

- Tail Lamp Replacement
- Control Module References for BCM replacement, programming and setup

&#169© Copyright Chevrolet. All rights reserved

DTC B2600 or B2605

Diagnostic Instructions

- Perform the Diagnostic System Check - Vehicle prior to using this diagnostic procedure.
- Review Strategy Based Diagnosis for an overview of the diagnostic approach.
- Diagnostic Procedure Instructions provides an overview of each diagnostic category.

DTC Descriptors

DTC B2600 01: Left Daytime Running Lamps Control Circuit Short to Battery

DTC B2600 02: Left Daytime Running Lamps Control Circuit Short to Ground

DTC B2600 04: Left Daytime Running Lamps Control Circuit Open

DTC B2605 01: Right Daytime Running Lamps Control Circuit Short to Battery

DTC B2605 02: Right Daytime Running Lamps Control Circuit Short to Ground

DTC B2605 04: Right Daytime Running Lamps Control Circuit Open

Diagnostic Fault Information

Circuit	Short to Ground	Open/High Resistance	Short to Voltage	Signal Performance
Ambient Light Sensor Signal	B2645 03	B2645 07	B2645 07	--
Daytime Running Lamp Control - Left (T4F)	B2600 02	B2600 04	B2600 01	-
Daytime Running Lamp Control - Right (T4F)	B2605 02	B2605 04	B2605 01	-
Left Dipped Beam Headlamp Control (T4A)	B2575 02	B2575 04	B2575 01	-
Right Dipped Beam Headlamp Control (T4A)	B2699 02	B2699 04	B2699 01	--
Ambient Light Sensor Ground	-	B2645 07	2	--

Daytime Running Lamp Ground - Left (T4F)	--	2	--	--
Daytime Running Lamp Ground - Right (T4F)	--	2	--	--
Left Dipped Beam Ground (T4A)	--	1	--	--
Right Dipped Beam Ground (T4A)	--	1	--	--
1. Headlamps Malfunction 2. Daytime Running Lamps Malfunction				

Circuit/System Description

The ambient light sensor is used to monitor outside lighting conditions. The ambient light sensor provides a voltage signal that will vary between 0.2-4.9 V depending on outside lighting conditions. The body control module (BCM) provides a 5 V reference signal to the ambient light sensor which is permanently grounded. The BCM monitors the ambient light sensor signal circuit to determine if outside lighting conditions are correct for either daytime running lamps (DRL) or automatic lamp control when the headlamp switch is in the AUTO position. In daylight conditions, the BCM will command the DRL ON by applying a pulse width modulated (PWM) voltage to the left and right DRL control circuits illuminating the DRL. Any function or condition that turns on the headlamps will cancel DRL operation.

Conditions for Running the DTC

- Battery voltage must be between 9-16 V.
- Headlamp switch in AUTO position.

Conditions for Setting the DTC

B2600 01

The BCM detects a short to voltage in the left DRL control circuit.

B2600 02

The BCM detects a short to ground in the left DRL control circuit.

B2600 04

The BCM detects an open in the left DRL control circuit.

B2605 01

The BCM detects a short to voltage in the left DRL control circuit.

B2605 02

The BCM detects a short to ground in the left DRL control circuit.

B2605 04

The BCM detects an open in the left DRL control circuit.

Action Taken When the DTC Sets

The BCM will disable the appropriate DRL control circuit.

Conditions for Clearing the DTC

- The condition responsible for setting the DTC no longer exists.
- A history DTC will clear once 100 consecutive malfunction free ignition cycles have occurred.

Reference Information

Schematic Reference

Headlamps/Daytime Running Lamps (DRL) Schematics

Connector End View Reference

Component Connector End Views

Description and Operation

Exterior Lighting Systems Description and Operation

Electrical Information Reference

- Circuit Testing
- Connector Repairs
- Testing for Intermittent Conditions and Poor Connections
- Wiring Repairs

Scan Tool Reference

Control Module References for scan tool information

Circuit/System Testing

1. Vehicle OFF, disconnect the harness connector at the appropriate daytime running lamp.
2. Vehicle OFF, exterior lamps OFF, test for less than 5.0 Ω between the ground circuit terminal 2 and ground.
   If greater than the specified range, test the ground circuit for an open/high resistance.
3. Connect a test lamp between the control circuit terminal 1 and ground.
4. Vehicle in Service Mode.
5. Command the Dedicated Daytime Running Lamp Command ON and OFF with a scan tool. The test lamp should turn ON and OFF when changing between the commanded states
   If the test lamp is always ON, test the control circuit for a short to voltage. If the circuit tests normal, replace the K9 Body Control Module.
   If the test lamp is always OFF, test the control circuit for a short to ground or an open/high resistance. If the circuit tests normal, replace the K9 Body Control Module.
6. If all circuits test normal, replace the faulty daytime running lamp.

Repair Instructions

Perform the Diagnostic Repair Verification after completing the diagnostic procedure.

- Headlamp Replacement : Volt → Ampera
- Control Module References for BCM replacement, programming and setup

&#169© Copyright Chevrolet. All rights reserved

DTC B2610

Diagnostic Instructions

- Perform the Diagnostic System Check - Vehicle prior to using this diagnostic procedure.
- Review Strategy Based Diagnosis for an overview of the diagnostic approach.
- Diagnostic Procedure Instructions provides an overview of each diagnostic category.

DTC Descriptors

DTC B2610 01: Passenger Compartment Dimming 1 Circuit Short to Battery

DTC B2610 02: Passenger Compartment Dimming 1 Circuit Short to Ground

DTC B2610 04: Passenger Compartment Dimming 1 Circuit Open

Diagnostic Fault Information

Circuit	Short to Ground	Open/High Resistance	Short to Voltage	Signal Performance
LED Backlight Dimming Control Terminal 8 X2	B2610 02	B2610 04, 1	B2610 01, 1	-
LED Backlight Dimming Control Terminal 9 X7	B2610 02	B2610 04, 1	B2610 01, 1	-
1. Interior Backlighting Malfunction				

Circuit/System Description

The instrument panel dimmer switch is used to increase and decrease the brightness of the interior backlighting components. The instrument panel dimmer switch provides a voltage signal to the body control module (BCM) that will increase as the brightness of the lights are increased and decrease as the brightness of the lights are decreased. The BCM provides a low reference, signal, and B+ voltage reference circuits to the instrument panel dimmer switch. When the instrument panel dimmer switch is placed in the desired position, the dimmed voltage setting is applied from the instrument panel dimmer switch through the instrument panel dimmer switch signal circuit to the BCM. The BCM interprets the signal and applies a pulse width modulated (PWM) voltage through the light emitting diode (LED) dimming control circuits illuminating the interior backlighting to the requested level of brightness.

Conditions for Running the DTC

- Battery voltage must be between 9-16 V.
- Sidelights ON.

Conditions for Setting the DTC

DTC B2610 01

The BCM detects a short to battery in the LED backlight dimming control circuit terminal 8 X2 or the LED backlight dimming control circuit terminal 9 X7.

DTC B2610 02

The BCM detects a short to ground in the LED backlight dimming control circuit terminal 8 X2 or the LED backlight dimming control circuit terminal 9 X7.

DTC B2610 04

The BCM detects an open/high resistance in the LED backlight dimming control circuit terminal 8 X2 or the LED backlight dimming control circuit terminal 9 X7.

Action Taken When the DTC Sets

The BCM will disable the LED backlight dimming control circuits.

Conditions for Clearing the DTC

- The condition responsible for setting the DTC no longer exists.
- A history DTC will clear once 100 consecutive malfunction free vehicle ON/OFF switch cycles have occurred.

Reference Information

Schematic Reference

Interior Lights Dimming Schematics

Connector End View Reference

Component Connector End Views

Description and Operation

Interior Lighting Systems Description and Operation

Electrical Information Reference

- Circuit Testing
- Connector Repairs
- Testing for Intermittent Conditions and Poor Connections
- Wiring Repairs

Scan Tool Reference

Control Module References for scan tool information

Circuit/System Testing

Note: Each component supplied by the LED backlight dimming control circuits may need to be disconnected to isolate the short to ground. Use the schematics to identify the following:

- Each component control and ground circuit terminals
- Component locations on the LED backlight dimming control circuits

1. Vehicle OFF, disconnect the harness connector at any component with inoperative backlighting.
2. Vehicle OFF, scan tool disconnected, all doors closed, all accessories OFF, and wait 2 minutes. Test for less than 10 Ω between the appropriate ground circuit terminal listed below and ground:
   - A20 Radio/HVAC Controls - terminal 17
   - S16 Driver Information Centre Switch - terminal 4
   - E37F Dome/Reading Lamps - Front - terminal 6
   - S25 Garage Door Opener switch - terminal 3
   - S48B Multifunction Switch - Overhead Console amber LED - terminal 6
   - S70R Steering Wheel Controls Switch - Right - terminal 5
   - S70L Steering Wheel Controls Switch - Left - terminal 7
   - S91 Hand Brake Control Switch - terminal 8
   - S48B Multifunction Switch - Overhead Console - terminal 2
   - S52 Outside Wing Mirror Switch - terminal 11
   - S113 Charge Port Door Open Request Switch - terminal 4
   - S117 Refuel Request Switch - terminal 4

- S83 Vehicle On/Off Switch - terminal 4

  If greater than the specified range, test the ground circuit for an open/high resistance.

3. Connect a test lamp between the appropriate control circuit terminal listed below and ground:
   - A20 Radio/HVAC Controls - terminal 18
   - S16 Driver Information Centre Switch - terminal 3
   - E37F Dome/Reading Lamps - Front - terminal 3
   - S25 Garage Door Opener switch - terminal 2
   - S48B Multifunction Switch - Overhead Console amber LED - terminal 3
   - S70L Steering Wheel Controls Switch - Left - terminal 6
   - S70R Steering Wheel Controls Switch - Right - terminal 4
   - S91 Hand Brake Control Switch - terminal 6
   - S48B Multifunction Switch - Overhead Console - terminal 1
   - S52 Outside Wing Mirror Switch - terminal 1
   - S113 Charge Port Door Open Request Switch - terminal 5
   - S117 Refuel Request Switch - terminal 5
   - S83 Vehicle On/Off Switch - terminal 8
4. Vehicle in Service Mode, command the LED Backlight Dimming ON and OFF with a scan tool. The test lamp should turn ON and OFF when changing between the commanded states.

   If the test lamp is always OFF, test the control circuit for a short to ground or an open/high resistance. If the circuit tests normal, replace the K9 Body Control Module.

   If the test lamp is always ON, test the control circuit for a short to voltage. If the circuit tests normal, replace the K9 Body Control Module.
5. If all circuits test normal, replace the component with inoperative backlighting.

Repair Instructions

Perform the Diagnostic Repair Verification after completing the diagnostic procedure.

- Driver Information Display and Multifunction Switch Replacement
- Outside Remote Control Wing Mirror Switch Replacement
- Radio Control Assembly Replacement
- Radio and Telephone Control Switch Replacement
- Accessory Switch Replacement
- Garage Door Opener Transmitter Pushbutton Replacement
- Dome and Reading Lamp Replacement
- Hand Brake Switch Replacement
- Fuel Tank Filler Door Lock Release Switch Replacement

- Charger Door Release Switch Replacement
- Control Module References for BCM replacement, programming and setup

&#169© Copyright Chevrolet. All rights reserved

DTC B2615

Diagnostic Instructions

- Perform the Diagnostic System Check - Vehicle prior to using this diagnostic procedure.
- Review Strategy Based Diagnosis for an overview of the diagnostic approach.
- Diagnostic Procedure Instructions provides an overview of each diagnostic category.

DTC Descriptor

DTC B2615 02: Passenger Compartment Dimming 2 Circuit Short to Ground

Diagnostic Fault Information

Circuit	Short to Ground	Open/High Resistance	Short to Voltage	Signal Performance
F7DR Fuse B+	B2545 01, B2545 04, B2615 02	B2545 01, B2545 04, B2615 02	--	--
Interior Lamps Control	B2545 01, B2545 04, B2615 02	1	1	--
Dome Lamp - Front Ground	--	1	--	--
Dome Lamp - Middle Ground	--	1	--	--
1. Interior Lights Malfunction				

Circuit/System Description

The dome lamp switch has 3 positions: DOOR, OFF, and ON. The ON position provides a ground for continuous operation and the dome lamps will remain illuminated until the switch is placed in either the DOOR or OFF position. When in the DOOR position, the dome lamps operation is controlled by the body control module (BCM). When any door is opened, the door ajar switch contacts close and the BCM receives a door open input. The BCM illuminates the dome lamps when any door is opened or a door lock/unlock request is activated with the key fob. After all doors have been closed, the dome lamps will remain illuminated approximately 3 s after the last door closes. When the driver places the dome lamp switch in the OFF position, the dome lamps will be disabled. In the event that the dome lamps were to remain illuminated for more than 10 min with the vehicle ON/OFF switch in the OFF position and no doors opened, the BCM will deactivate the dome lamps control circuit to prevent total battery discharge.

Conditions for Running the DTC

Battery voltage must be between 9-16 V.

Conditions for Setting the DTC

- The BCM detects a short to ground in the dome lamps control circuit.
- The BCM detects a short to ground or an open/high resistance in the F7DR (interior lamps) fuse B+ circuit.

Action Taken When the DTC Sets

The front and middle dome lamps are inoperative.

Conditions for Clearing the DTC

- The condition responsible for setting the DTC no longer exists.
- A history DTC will clear once 100 consecutive malfunction free vehicle ON/OFF switch cycles have occurred.

Diagnostic Aids

When the F7DR (interior lamps) fuse is open, both dome lamps, sun visor lamps, reading lamps, and reverse lamps will be inoperative. DTC B2545 will also set for the reverse lamps when the vehicle is placed in the reverse gear.

Reference Information

Schematic Reference

- Interior Lights Schematics
- Body Control System Schematics

Connector End View Reference

Component Connector End Views

Description and Operation

Interior Lighting Systems Description and Operation

Electrical Information Reference

- Circuit Testing

- Connector Repairs
- Testing for Intermittent Conditions and Poor Connections
- Wiring Repairs

Scan Tool Reference

Control Module References for scan tool information

Circuit/System Testing

Note: Each dome lamp may need to be disconnected to isolate the short to ground. Use the schematic to identify the following:

- Each dome lamps control and ground circuit terminals
- All dome lamps equipped on the vehicle
- Component locations on the dome lamps control circuits

1. Vehicle OFF, disconnect the X5 harness connector at the K9 Body Control Module.
2. Vehicle in Service Mode, verify that a test lamp illuminates between the F7DR (interior lamps) fuse B+ circuit terminal 4 and ground.
   If the test lamp does not illuminate, test the B+ circuit for a short to ground or an open/high resistance.
3. Vehicle OFF, connect the X5 harness connector at the K9 Body Control Module.
4. Disconnect the harness connector at the inoperative dome lamp.
5. Vehicle OFF, scan tool disconnected, all doors closed, all accessories OFF, and wait 2 min, then test for less than 10 Ω between the ground circuit terminal 6 and ground.
   If greater than the specified range, test the ground circuit for an open/high resistance.
6. Connect a test lamp between the control circuit terminal 2 and ground.
7. Vehicle in Service Mode, command the Courtesy Lamps ON and OFF with a scan tool. The test lamp should turn ON and OFF when changing between the commanded states.
   If the test lamp is always OFF, test the control circuit for a short to ground or an open/high resistance. If the circuit tests normal, replace the K9 Body Control Module.
   If the test lamp is always ON, test the control circuit for a short to voltage. If the circuit tests normal, replace the K9 Body Control Module.
8. If all circuits test normal, replace the appropriate dome lamp.

Repair Instructions

Perform the Diagnostic Repair Verification after completing the diagnostic procedure.

- Reading Lamp Replacement
- Dome and Reading Lamp Replacement
- Control Module References for BCM replacement, programming and setup

&#169© Copyright Chevrolet. All rights reserved

DTC B2625

Diagnostic Instructions

- Perform the Diagnostic System Check - Vehicle prior to using this diagnostic procedure.
- Review Strategy Based Diagnosis for an overview of the diagnostic approach.
- Diagnostic Procedure Instructions provides an overview of each diagnostic category.

DTC Descriptor

DTC B2625 02: Display Dimming Pulse Width Modulation Output Circuit Short to Ground

Diagnostic Fault Information

Circuit	Short to Ground	Open/High Resistance	Short to Voltage	Signal Performance
Garage Door Opener Switch Amber LED Control	B2625 02	1	1	--
Garage Door Opener Switch Ground	--	1	--	--
1. Interior Backlighting Malfunction				

Circuit/System Description

The instrument panel dimmer switch is used to increase and decrease the brightness of the interior backlighting components. The instrument panel dimmer switch provides a voltage signal to the body control module (BCM) that will increase as the brightness of the lights are increased and decrease as the brightness of the lights are decreased. The BCM provides a low reference, signal, and B+ voltage reference circuits to the instrument panel dimmer switch. When the instrument panel dimmer switch is placed in the desired position, the dimmed voltage setting is applied from the instrument panel dimmer switch through the instrument panel dimmer switch signal circuit to the BCM. The BCM interprets the signal and applies a pulse width modulated (PWM) voltage through the garage door opener switch amber LED indicator control circuit illuminating the garage door opener switch amber LED to the requested level of brightness.

Conditions for Running the DTC

- Battery voltage must be between 9-16 V.
- Sidelights ON.

Conditions for Setting the DTC

The BCM detects a short to ground in the garage door opener switch amber LED control circuit.

Action Taken When the DTC Sets

The garage door opener switch amber LED is inoperative.

Conditions for Clearing the DTC

- The condition responsible for setting the DTC no longer exists.
- A history DTC will clear once 100 consecutive malfunction free vehicle ON/OFF switch cycles have occurred.

Reference Information

Schematic Reference

Interior Lights Dimming Schematics

Connector End View Reference

Component Connector End Views

Description and Operation

Interior Lighting Systems Description and Operation

Electrical Information Reference

- Circuit Testing
- Connector Repairs
- Testing for Intermittent Conditions and Poor Connections
- Wiring Repairs

Scan Tool Reference

Control Module References for scan tool information

Circuit/System Testing

1. Vehicle OFF, disconnect the harness connector at the S25 Garage Door Opener switch.
2. Vehicle OFF, scan tool disconnected, all doors closed, all accessories OFF, and wait 2 minutes. Test for less than 5 Ω between the ground circuit terminal 6 and ground.
   If greater than the specified range, test the ground circuit for an open/high resistance.
3. Connect a test lamp between the control circuit terminal 3 and ground.
4. Vehicle in Service Mode, command the LED Backlight Dimming ON and OFF with a scan tool. The test lamp should turn ON and OFF when changing between the commanded states.
   If the test lamp is always ON, test the control circuit for a short to voltage. If the circuit tests normal, replace the K9 Body Control Module.
   If the test lamp is always OFF, test the control circuit for a short to ground or an open/high resistance. If the circuit tests normal, replace the K9 Body Control Module.
5. If all circuits test normal, replace the S25 Garage Door Opener switch.

Repair Instructions

Perform the Diagnostic Repair Verification after completing the diagnostic procedure.

- Garage Door Opener Transmitter Pushbutton Replacement
- Control Module References for BCM replacement, programming and setup

&#169© Copyright Chevrolet. All rights reserved

DTC B2645

Diagnostic Instructions

- Perform the Diagnostic System Check - Vehicle prior to using this diagnostic procedure.
- Review Strategy Based Diagnosis for an overview of the diagnostic approach.
- Diagnostic Procedure Instructions provides an overview of each diagnostic category.

DTC Descriptors

DTC B2645 03: Ambient Light Sensor Circuit Low Voltage

DTC B2645 07: Ambient Light Sensor Circuit High Voltage

Diagnostic Fault Information

Circuit	Short to Ground	Open/High Resistance	Short to Voltage	Signal Performance
Ambient Light Sensor Signal	B2645 03	B2645 07	B2645 07	--
Daytime Running Lamp Control - Left	2	2	2	--
Daytime Running Lamp Control - Right	2	2	2	--
Dipped Beam Headlamp Control - Left	1	1	1	--
Dipped Beam Headlamp Control - Right	1	1	1	--
Ambient Light Sensor Low Reference	2	B2645 07, B0163 05, B0183 05	2	--
Daytime Running Lamp Ground - Left	--	2	--	--
Daytime Running Lamp Ground - Right	--	2	--	--
Headlamp Ground - Left	--	1	--	--
Headlamp Ground - Right	--	1	--	--
1. Headlamps Malfunction 2. Daytime Running Lamps Malfunction				

Circuit/System Description

The ambient light sensor is used to monitor outside lighting conditions. The body control module (BCM) provides a low reference ground and 5V reference signal to the ambient light sensor. Depending on outside lighting conditions, the ambient light sensor provides a voltage signal to the BCM that will vary between 0.2-4.9 V. The BCM monitors the ambient light sensor signal circuit to determine if outside lighting conditions are correct for either daytime running lamps (DRL) or automatic lamp control when the headlamp switch is in the AUTO position. In daylight conditions, the BCM will command the DRL ON by applying voltage to the left and right DRL control circuits illuminating the DRL. Any function or condition that turns on the headlamps will cancel DRL operation.

Conditions for Running the DTC

Battery voltage must be between 9-16 V.

Conditions for Setting the DTC

DTC B2645 03

The BCM detects a short to ground in the ambient light sensor signal circuit.

DTC B2645 07

- The BCM detects a short to voltage or an open/high resistance in the ambient light sensor signal circuit.
- The BCM detects an open/high resistance in the ambient light sensor low reference circuit.

Action Taken When the DTC Sets

- The BCM defaults to low light status and commands the dipped beam headlamps ON.
- Daytime running lamps are inoperative.

Conditions for Clearing the DTC

- The condition responsible for setting the DTC no longer exists.
- A history DTC will clear once 100 consecutive malfunction free vehicle ON/OFF switch cycles have occurred.

Reference Information

Schematic Reference

Headlamps/Daytime Running Lamps (DRL) Schematics

Connector End View Reference

Component Connector End Views

Description and Operation

Exterior Lighting Systems Description and Operation

Electrical Information Reference

- Circuit Testing
- Connector Repairs
- Testing for Intermittent Conditions and Poor Connections
- Wiring Repairs

Scan Tool Reference

Control Module References for scan tool information

Circuit/System Testing

1. Vehicle OFF, disconnect the harness connector at the B10B Ambient Light/Sunload Sensor.
2. Vehicle OFF, scan tool disconnected, all doors closed, all accessories OFF, and wait 2 minutes. Test for less than 10 Ω between the low reference circuit terminal 6 and ground.
   If greater than the specified range, test the low reference circuit for a short to voltage or an open/high resistance. If the circuit tests normal, replace the K33 HVAC Control Module.
3. Vehicle in Service Mode, verify the scan tool Ambient Light Sensor parameter is greater than 4.65 V.
   If less than the specified range, test the signal circuit terminal 5 for a short to ground. If the circuit tests normal, replace the K9 Body Control Module.
4. Install a 3 A fused jumper wire between the signal circuit terminal 5 and the low reference circuit terminal 6. Verify the scan tool Ambient Light Sensor parameter is less than 0.19 V.
   If greater than the specified range, test the signal circuit for a short to voltage an open/high resistance. If the circuit tests normal, replace the K9 Body Control Module.
5. If all circuits test normal, replace the B10B Ambient Light/Sunload Sensor.

Repair Instructions

Perform the Diagnostic Repair Verification after completing the diagnostic procedure.

- Sun Load Temperature and Headlamp Automatic Control Ambient Light Sensor Replacement
- Control Module References for BCM or HVAC control module replacement, programming and setup

&#169© Copyright Chevrolet. All rights reserved

DTC B2699

Diagnostic Instructions

- Perform the Diagnostic System Check - Vehicle prior to using this diagnostic procedure.
- Review Strategy Based Diagnosis for an overview of the diagnostic approach.
- Diagnostic Procedure Instructions provides an overview of each diagnostic category.

DTC Descriptors

DTC B2699 01: Right Headlamp Control Circuit Short to Battery

DTC B2699 02: Right Headlamp Control Circuit Short to Ground

DTC B2699 04: Right Headlamp Control Circuit Open

Diagnostic Fault Information

Circuit	Short to Ground	Open/High Resistance	Short to Voltage	Signal Performance
Right Headlamp Control	B2699 02	B2699 04	B2699 01	--

Circuit/System Description

When the headlamp switch is placed in dipped beam position, the body control module (BCM) applies a voltage to the headlamps through their respective voltage supply circuits.

Conditions for Running the DTC

B2699 01

The headlamps are turned OFF.

B2699 02 and B2699 04

The headlamps are turned ON.

Conditions for Setting the DTC

B2699 01

The BCM detects a short to voltage on the control circuit.

B2699 02

The BCM detects a short to ground on the control circuit.

B2699 04

The BCM detects an open control circuit.

Action Taken When the DTC Sets

The right headlamp is inoperative.

Conditions for Clearing the DTC

The condition for setting the DTC is not longer present.

Reference Information

Schematic Reference

Exterior Lamps Schematics

Connector End View Reference

Component Connector End Views

Description and Operation

Exterior Lighting Systems Description and Operation

Electrical Information Reference

- Circuit Testing
- Connector Repairs
- Testing for Intermittent Conditions and Poor Connections
- Wiring Repairs

Scan Tool Reference

Control Module References for scan tool information

Circuit/System Verification

Vehicle in Service Mode, command the right Headlamp Dipped Beam test. The headlamps should be ON/OFF.

Circuit/System Testing

1. Vehicle OFF, disconnect the harness connector at the right headlamp.
2. Test for less than 5 Ω between the E13R Headlamp - Right ground circuit harness connector terminal 3 and ground.
   If greater than the specified value, test the ground circuit for an open/high resistance.
3. Connect a test lamp between the E13R Headlamp - Right signal circuit harness connector terminal 2 and ground.
4. Command the Right Headlamp Low Beam test with a scan tool. The test lamp should turn ON and OFF when changing between the commanded states.
   If the test lamp is always ON, test the signal circuit for a short to voltage. If the circuit tests normal, replace the K9 Body Control Module.
   If the test lamp is always OFF, test the Signal circuit for a short to ground or an open/high resistance. If the circuits test normal, replace the K9 Body Control Module.
5. If all the circuits test normal, replace the E13R Headlamp - Right.

Repair Instructions

Perform the Diagnostic Repair Verification after completing the diagnostic procedure.

- Headlamp Replacement : Volt → Ampera
- Control Module References for BCM replacement, programming and setup

&#169© Copyright Chevrolet. All rights reserved

DTC B3588

Diagnostic Instructions

- Perform the Diagnostic System Check - Vehicle prior to using this diagnostic procedure.
- Review Strategy Based Diagnosis for an overview of the diagnostic approach.
- Diagnostic Procedure Instructions provides an overview of each diagnostic category.

DTC Descriptor

DTC B3588 00: Rear Fog Lamp Switch Circuit Malfunction

Diagnostic Fault Information

Circuit	Short to Ground	Open/High Resistance	Short to Voltage	Signal Performance
Rear Fog Lamp Switch Signal	--	--	--	B3588 00

Circuit/System Description

The rear fog lamp switch signal circuit is grounded through a resistor momentarily by pressing the rear fog lamp switch. The body control module (BCM) energises the rear fog lamp supply voltage circuit which illuminates the rear fog lamp.

Conditions for Running the DTC

- The ignition is turned ON.
- Dipped beam is illuminated.
- Rear fog lamp switch activated.

Conditions for Setting the DTC

Rear Fog Lamp switch stuck.

Action Taken When the DTC Sets

The rear fog lamp is inoperative.

Conditions for Clearing the DTC

The condition for setting the DTC is no longer present.

Reference Information

Schematic Reference

Connector End View Reference

Component Connector End Views

Description and Operation

Exterior Lighting Systems Description and Operation

Electrical Information Reference

- Circuit Testing
- Connector Repairs
- Testing for Intermittent Conditions and Poor Connections
- Wiring Repairs

Scan Tool Reference

Control Module References for scan tool information

Circuit/System Verification

Ignition ON, observe the scan tool Rear Fog Lamp Switch parameter. The reading should change between Active/Inactive when changing between pressed and released rear fog lamp switch button.

Circuit/System Testing

1. Ignition OFF, disconnect the X1 and X3 harness connector at the K9 Body Control Module.

2. Ignition ON, test for less than 0.3 V at the K9 Body Control Module signal circuit harness connector X1 terminal 9 and ground.
   If greater than the specified value, test the signal circuit for an short to voltage.
3. Test for less than 0.3 V at the K9 Body Control Module 12 V reference circuit harness connector X3 terminal 4 and ground.
   If greater than the specified value, test the 12 V reference circuit for a short to voltage.
4. Ignition OFF, test for infinite resistance between the K9 Body Control Module signal circuit harness connector X1 terminal 9 and ground.
   If lower than the specified value, test the signal circuit for a short to ground.
5. Test for infinite resistance between the K9 Body Control Module 12 V reference circuit harness connector X3 terminal 4 and ground.
   If lower than the specified value, test the 12 V reference circuit for a short to ground.
6. Press and hold the front fog lamp switch button.
7. Test for 100-200 Ω between the K9 Body Control Module 12 V reference circuit harness connector X3 terminal 4 and the K9 Body Control Module signal circuit harness connector X1 terminal 9.
   If not within the specified range, test the 12 V reference circuit and the signal circuit for an open/high resistance. If the circuits test normal replace the S30 Headlamp Switch
8. If all circuits test normal, replace the K9 Body Control Module.

Component Testing

Static Test

Ignition OFF, disconnect the harness connector at the S30 Headlamp Switch. Press and hold the rear fog lamp switch button, test for 100-200 Ω at the S30 Headlamp Switch terminal 1 and terminal 12.

If not within the specified range replace the S30 Headlamp Switch.

Repair Instructions

Perform the Diagnostic Repair Verification after completing the diagnostic procedure.

- Indicator Multifunction Switch Replacement for headlamp switch replacement
- Control Module References for BCM replacement, programming and setup

&#169© Copyright Chevrolet. All rights reserved

DTC B3600

Diagnostic Instructions

- Perform the Diagnostic System Check - Vehicle prior to using this diagnostic procedure.
- Review Strategy Based Diagnosis for an overview of the diagnostic approach.
- Diagnostic Procedure Instructions provides an overview of each diagnostic category.

DTC Descriptors

DTC B3600 03: Passenger Compartment Dimming Request Signal Circuit Low Voltage

DTC B3600 07: Passenger Compartment Dimming Request Signal Circuit High Voltage

Diagnostic Fault Information

Circuit	Short to Ground	Open/High Resistance	Short to Voltage	Signal Performance
Instrument Panel Dimmer Switch B+ Reference	B1395 03, B3600 03	B3600 03	1	B1395 07, 1
Instrument Panel Dimmer Switch Signal	B3600 03	B3600 03	B3600 07, 1	-
LED Backlight Dimming Control Terminal 8 X2	B2610 02	B2610 04, 1	B2610 01, 1	-
LED Backlight Dimming Control Terminal 9 X7	B2610 02	B2610 04, 1	B2610 01, 1	-
Instrument Panel Dimmer Switch Low Reference	1	1	1	--
Driver Information Centre Switch Ground	--	1	--	--
1. Interior Backlighting Malfunction				

Circuit/System Description

The instrument panel dimmer switch is used to increase and decrease the brightness of the interior backlighting components. The instrument panel dimmer switch provides a voltage signal to the body control module (BCM) that will increase as the brightness of the lights are increased and decrease as the brightness of the lights are decreased. The BCM provides a low reference, signal, and B+ voltage reference circuits to the instrument panel dimmer switch. When the instrument panel dimmer switch is placed in the desired position, the dimmed voltage setting is applied from the instrument panel dimmer switch through the instrument panel dimmer switch signal circuit to the BCM. The

BCM interprets the signal and applies a pulse width modulated (PWM) voltage through the light emitting diode (LED) dimming control circuits illuminating the interior backlighting to the requested level of brightness.

Conditions for Running the DTC

- Battery voltage must be between 9-16 V.
- Sidelights ON.

Conditions for Setting the DTC

DTC B3600 03

- The BCM detects a short to ground or an open/high resistance in the instrument panel dimmer switch B+ reference circuit.
- The BCM detects a short to ground or an open/high resistance in the instrument panel dimmer switch signal circuit.

DTC B3600 07

The BCM detects a short to voltage in the instrument panel dimmer switch signal circuit.

Action Taken When the DTC Sets

The interior backlighting defaults to full bright.

Conditions for Clearing the DTC

- The condition responsible for setting the DTC no longer exists.
- A history DTC will clear once 100 consecutive malfunction free vehicle ON/OFF switch cycles have occurred.

Diagnostic Aids

The instrument panel dimmer switch B+ reference circuit is a low current circuit that will not illuminate a test lamp.

Reference Information

Schematic Reference

Interior Lights Dimming Schematics

Connector End View Reference

Component Connector End Views

Description and Operation

Interior Lighting Systems Description and Operation

Electrical Information Reference

- Circuit Testing
- Connector Repairs
- Testing for Intermittent Conditions and Poor Connections
- Wiring Repairs

Scan Tool Reference

Control Module References for scan tool information

Circuit/System Testing

1. Vehicle OFF, disconnect the harness connector at the S16 Driver Information Centre Switch.
2. Vehicle in Service Mode, verify that a test lamp illuminates between B+ and the low reference circuit terminal 12.
   If the test lamp does not illuminate, test the low reference circuit for a short to voltage or an open/high resistance.
3. Test for B+ between the B+ reference circuit terminal 11 and ground.
   If less than the specified range, test the B+ reference circuit for a short to ground or an open/high resistance. If the circuit tests normal, replace the K9 Body Control Module.
4. Verify that a test lamp does not illuminate between the B+ reference circuit terminal 11 and ground.
   If the test lamp illuminates, test the B+ reference circuit for a short to voltage. If the circuit tests normal, replace the K9 Body Control Module.
5. Verify the scan tool LED Backlight Dimming Command parameter is greater than 40%.
   If less than the specified range, test the signal circuit terminal 10 for a short to voltage. If the circuit tests normal, replace the K9 Body Control Module.
6. Vehicle OFF, install a 3 A fused jumper wire between the B+ reference circuit terminal 11 and the signal circuit terminal 10.
7. Vehicle in Service Mode, verify the scan tool LED Backlight Dimming Command parameter is less than 40%.
   If greater than the specified range, test the signal circuit terminal 10 for a short to ground or an open/high resistance. If the circuit tests normal, replace the K9 Body Control Module.
8. If all circuits test normal, replace the S16 Driver Information Centre Switch.

Repair Instructions

Perform the Diagnostic Repair Verification after completing the diagnostic procedure.

- Driver Information Display and Multifunction Switch Replacement
- Control Module References for BCM replacement, programming and setup

&#169© Copyright Chevrolet. All rights reserved

DTC B3650

Diagnostic Instructions

- Perform the Diagnostic System Check - Vehicle prior to using this diagnostic procedure.
- Review Strategy Based Diagnosis for an overview of the diagnostic approach.
- Diagnostic Procedure Instructions provides an overview of each diagnostic category.

DTC Descriptor

DTC B3650 08: Main Beam Request Signal Circuit Performance - Signal Invalid

Diagnostic Fault Information

Circuit	Short to Ground	Open/High Resistance	Short to Voltage	Signal Performance
Indicator/Multifunction Switch Headlamps OFF Signal	B257A 00	1	1	--
Indicator/Multifunction Switch Headlamps ON Signal	B257A 00	1	1	--
Indicator/Multifunction Switch Sidelights ON Signal	2	B257A 00	2	--
Indicator/Multifunction Switch Flash To Pass Signal	3806 00	1	1	--
Indicator/Multifunction Switch Main Beam Signal	B3650 08	1	1	--
Indicator/Multifunction Switch Ground	--	1	--	--
1. Headlamps Malfunction 2. Sidelight, Number Plate, and/or Tail Lamps Malfunction				

Circuit/System Description

For headlamp operation, the body control module (BCM) monitors three signal circuits from the indicator/multifunction switch. When the indicator/multifunction switch is in the AUTO position, the three signal circuits are open and the BCM relies on the ambient light sensor input to turn the headlamps and daytime running lamps (DRL) ON and OFF. When the indicator/multifunction switch is placed in the OFF position, the indicator/multifunction switch headlamps OFF signal circuit is grounded, indicating to the BCM that the exterior lamps should be turned OFF. With the indicator/multifunction switch in the SIDELIGHTS position, the indicator/multifunction switch sidelights ON signal circuit is

grounded, indicating that the sidelights have been requested. When the indicator/multifunction switch is in the HEADLAMP position, both the indicator/multifunction switch sidelights ON signal circuit and the indicator/multifunction switch headlamps ON signal circuit are grounded. The BCM responds by commanding the sidelights and headlamps ON.

Conditions for Running the DTC

Battery voltage must be between 9-16V.

Conditions for Setting the DTC

The BCM detects a short to ground in the indicator/multifunction switch main beam signal circuit.

Action Taken When the DTC Sets

The main beam headlamps will not operate.

Conditions for Clearing the DTC

- The condition responsible for setting the DTC no longer exists.
- A history DTC will clear once 100 consecutive malfunction free vehicle ON/OFF switch cycles have occurred.

Reference Information

Schematic Reference

Exterior Lamps Schematics

Connector End View Reference

Component Connector End Views

Description and Operation

Exterior Lighting Systems Description and Operation

Electrical Information Reference

- Circuit Testing
- Connector Repairs

- Testing for Intermittent Conditions and Poor Connections
- Wiring Repairs

Scan Tool Reference

Control Module References for scan tool information

Circuit/System Testing

1. Vehicle OFF, disconnect the harness connector at the S78 Indicator/Multifunction Switch.
2. Vehicle OFF, scan tool disconnected, all doors closed, all accessories OFF, and wait 2 minutes. Test for less than 10 Ω between the ground circuit terminal 6 and ground.
   If greater then the specified range, test the ground circuit for an open/high resistance.
3. Vehicle in Service Mode, verify the scan tool Main Beam Select Switch parameter is Inactive.
   If not the specified value, test the signal circuit terminal 11 for a short to ground. If the circuit tests normal, replace the K9 Body Control Module.
4. Install a 3 A fused jumper wire between the signal circuit terminal 11 and ground. Verify the scan tool Main Beam Select Switch parameter is Active.
   If not the specified value, test the signal circuit for a short to voltage or an open/high resistance. If the circuit tests normal, replace the K9 Body Control Module.
5. If all circuits test normal, replace the S78 Indicator/Multifunction Switch.

Repair Instructions

Perform the Diagnostic Repair Verification after completing the diagnostic procedure.

- Indicator Multifunction Switch Replacement
- Control Module References for BCM replacement, programming and setup

&#169© Copyright Chevrolet. All rights reserved

DTC B3806

Diagnostic Instructions

- Perform the Diagnostic System Check - Vehicle prior to using this diagnostic procedure.
- Review Strategy Based Diagnosis for an overview of the diagnostic approach.
- Diagnostic Procedure Instructions provides an overview of each diagnostic category.

DTC Descriptor

DTC B3806 00: Main Beam and Headlamp Flash Select Circuit Malfunction

Diagnostic Fault Information

Circuit	Short to Ground	Open/High Resistance	Short to Voltage	Signal Performance
Indicator/Multifunction Switch Headlamps OFF Signal	B257A 00	1	1	--
Indicator/Multifunction Switch Headlamps ON Signal	B257A 00	1	1	--
Indicator/Multifunction Switch Sidelights ON Signal	2	B257A 00	2	--
Indicator/Multifunction Switch Flash To Pass Signal	3806 00	1	1	--
Indicator/Multifunction Switch Main Beam Signal	B3650 08	1	1	--
Indicator/Multifunction Switch Ground	--	1	--	--
1. Headlamps Malfunction 2. Sidelight, Number Plate, and/or Tail Lamps Malfunction				

Circuit/System Description

When the indicator/multifunction switch is momentarily placed in the flash to pass position, ground is applied to the body control module (BCM) through the flash to pass signal circuit. The BCM responds to the flash to pass request by applying ground to the high beam relay control circuit which energises the main beam relay. With the main beam relay energised, the switch contacts close allowing battery voltage to flow through the main beam fuses to the main beam control circuits illuminating the main beam headlamps. The main beam headlamps will only illuminate for as long at the flash to pass switch is activated.

Conditions for Running the DTC

Battery voltage must be between 9-16V.

Conditions for Setting the DTC

The BCM detects a short to ground in the indicator/multifunction switch flash to pass signal circuit.

Action Taken When the DTC Sets

The main beam lamps and the main beam indicator on the instrument panel cluster are always ON.

Conditions for Clearing the DTC

- The condition responsible for setting the DTC no longer exists.
- A history DTC will clear once 100 consecutive malfunction free vehicle ON/OFF switch cycles have occurred.

Reference Information

Schematic Reference

Exterior Lamps Schematics

Connector End View Reference

Component Connector End Views

Description and Operation

Exterior Lighting Systems Description and Operation

Electrical Information Reference

- Circuit Testing
- Connector Repairs
- Testing for Intermittent Conditions and Poor Connections
- Wiring Repairs

Scan Tool Reference

Control Module References for scan tool information

Circuit/System Testing

1. Vehicle OFF, disconnect the harness connector at the S78 Indicator/Multifunction Switch.
2. Vehicle OFF, scan tool disconnected, all doors closed, all accessories OFF, and wait 2 minutes. Test for less than 10 Ω between the ground circuit terminal 6 and ground.
   If greater then the specified range, test the ground circuit for an open/high resistance.
3. Vehicle in Service Mode, verify the scan tool Headlamps Flash Switch parameter is Inactive.
   If not the specified value, test the signal circuit terminal 12 for a short to ground. If the circuit tests normal, replace the K9 Body Control Module.
4. Install a 3 A fused jumper wire between the signal circuit terminal 12 and ground. Verify the scan tool Headlamps Flash Switch parameter is Active.
   If not the specified value, test the signal circuit for a short to voltage or an open/high resistance. If the circuit tests normal, replace the K9 Body Control Module.
5. If all circuits test normal, replace the S78 Indicator/Multifunction Switch.

Repair Instructions

Perform the Diagnostic Repair Verification after completing the diagnostic procedure.

- Turn Signal Multifunction Switch Replacement
- Control Module References for BCM replacement, programming and setup

&#169© Copyright Chevrolet. All rights reserved

DTC B3884

Diagnostic Instructions

- Perform the Diagnostic System Check - Vehicle prior to using this diagnostic procedure.
- Review Strategy Based Diagnosis for an overview of the diagnostic approach.
- Diagnostic Procedure Instructions provides an overview of each diagnostic category.

DTC Descriptors

DTC B3884 01: Centre High Mounted Brake Lamp Circuit Short to Battery

DTC B3884 02: Centre High Mounted Brake Lamp Circuit Short to Ground

DTC B3884 04: Centre High Mounted Brake Lamp Circuit Open

Diagnostic Fault Information

Circuit	Short to Ground	Open/High Resistance	Short to Voltage	Signal Performance
Centre High Mounted Brake lamp Control	B3884 02	B3884 04	B3884 01	--
Centre High Mounted Brake Lamp Ground	--	1	--	--
1. Brake Lamps Malfunction				

Circuit/System Description

The brake pedal position (BPP) sensor is used to sense the action of the driver application of the brake pedal. The BPP sensor provides an analogue voltage signal that will increase as the brake pedal is applied. The body control module (BCM) provides a low reference signal and a 5 V reference voltage to the BPP sensor. When the variable signal reaches a voltage threshold indicating the brakes have been applied, the BCM will apply battery voltage to the left and right brake lamp control circuits as well as the centre high mounted brake lamp control circuit illuminating the left and right brake lamps and the centre high mounted brake lamp.

Conditions for Running the DTC

- Battery voltage must be between 9-16 V.
- Brakes applied.

Conditions for Setting the DTC

DTC B3884 01

The BCM detects a short to voltage in the Centre High Mounted Brake Lamp control circuit.

DTC B3884 02

The BCM detects a short to ground in the Centre High Mounted Brake Lamp control circuit.

DTC B3884 04

The BCM detects an open/high resistance in the Centre High Mounted Brake Lamp control circuit.

Action Taken When the DTC Sets

DTC B3884 01

Centre High Mounted Brake Lamp always ON.

DTC B3884 02 and B3884 04

Centre High Mounted Brake Lamp inoperative.

Conditions for Clearing the DTC

- The condition responsible for setting the DTC no longer exists.
- A history DTC will clear once 100 consecutive malfunction free vehicle ON/OFF switch cycles have occurred.

Reference Information

Schematic Reference

Exterior Lamps Schematics

Connector End View Reference

Component Connector End Views

Description and Operation

Exterior Lamps Schematics

Electrical Information Reference

- Circuit Testing
- Connector Repairs
- Testing for Intermittent Conditions and Poor Connections
- Wiring Repairs

Scan Tool Reference

Control Module References for scan tool information

Circuit/System Testing

1. Vehicle OFF, disconnect the harness connector at the E6 Centre High Mounted Brake Lamp.
2. Vehicle OFF, exterior lamps OFF, test for less than 5 Ω between the ground circuit terminal 2 and ground.
   If greater than the specified range, test the ground circuit for an open/high resistance.
3. Connect a test lamp between the control circuit terminal 1 and ground.
4. Vehicle in Service Mode, command the Centre Brake Lamp ON and OFF with a scan tool. The test lamp should turn ON and OFF when changing between the commanded states.
   If the test lamp is always ON, test the control circuit for a short to voltage. If the circuit tests normal, replace the K9 Body Control Module.
   If the test lamp is always OFF, test the control circuit for a short to ground or an open/high resistance. If the circuit tests normal, replace the K9 Body Control Module.
5. If all circuits test normal, replace the E6 Centre High Mounted Brake Lamp.

Repair Instructions

Perform the Diagnostic Repair Verification after completing the diagnostic procedure.

- High Mount Brake Lamp Replacement
- Control Module References for BCM replacement, programming and setup

&#169© Copyright Chevrolet. All rights reserved

DTC B3948 or B3949

Diagnostic Instructions

- Perform the Diagnostic System Check - Vehicle prior to using this diagnostic procedure.
- Review Strategy Based Diagnosis for an overview of the diagnostic approach.
- Diagnostic Procedure Instructions provides an overview of each diagnostic category.

DTC Descriptors

DTC B3948 01: Left Front Indicator Circuit Short to Battery

DTC B3948 02: Left Front Indicator Circuit Short to Ground

DTC B3948 04: Left Front Indicator Circuit Open

DTC B3949 01: Right Front Indicator Circuit Short to Battery

DTC B3949 02: Right Front Indicator Circuit Short to Ground

DTC B3949 04: Right Front Indicator Circuit Open

Diagnostic Fault Information

Circuit	Short to Ground	Open/High Resistance	Short to Voltage	Signal Performance
F6DR Fuse B+	B3867 01, B3867 04, B3949 01, B3949 04	B3867 01, B3867 04, B3949 01, B3949 04	--	--
F8DR Fuse B+	B3948 01, B3948 04	B3948 01, B3948 04	--	--
Brake/Indicator Control - Left Rear	B3950 02	B3950 01, B3950 04	1	--
Brake/Indicator Control - Right Rear	B3951 02	B3951 01, B3951 04	1	--
Indicator Control - Left Front	B3948 02	B3948 01, B3948 04	1	--
Indicator Control - Right Front	B3949 02	B3949 01, B3949 04	1	--

Sidelight/Indicator Lamp Ground - Left Front	-	B2585 01, B2585 04, B3948 01, B3948 04	--	--
Sidelight/Indicator Lamp Ground - Right Front	-	B3867 01, B3867 04, B3949 01, B3949 04	--	--
Tail Lamp Ground - Left	--	1	--	--
Tail Lamp Ground - Right	--	1	--	--
1. Indicator Lamps and/or Indicators Malfunction				

Circuit/System Description

Ground is applied at all times to the indicator/multifunction switch. The indicator lamps may only be activated with the vehicle ON/OFF switch in the SERVICE MODE or ON positions. When the indicator/multifunction switch is placed in either the TURN RIGHT or TURN LEFT position, ground is applied to the body control module (BCM) through either the right turn or left indicator switch signal circuit. The BCM responds to the indicator switch input by applying a pulsating voltage to the front and rear indicator lamps through there respective control circuits. When a indicator request is received by the BCM, a serial data message is sent to the instrument panel cluster requesting the respective indicator indicator be pulsed ON and OFF.

Conditions for Running the DTC

Battery voltage must be between 9-16 V.

Conditions for Setting the DTC

DTC B3948 01 and B3948 04

- The BCM detects a short to ground or an open/high resistance in the F8DR fuse B+ circuit.
- The BCM detects an open/high resistance in the left front indicator control circuit.
- The BCM detects an open/high resistance in the left front indicator ground circuit.

DTC B3948 02

The BCM detects a short to ground in the left front indicator control circuit.

DTC B3949 01 and B3949 04

- The BCM detects a short to ground or an open/high resistance in the F6DR fuse B+ circuit.
- The BCM detects an open/high resistance in the right front indicator control circuit.
- The BCM detects an open/high resistance in the right front indicator ground circuit.

DTC B3949 02

The BCM detects a short to ground in the right front indicator control circuit.

Action Taken When the DTC Sets

DTC B3948

- The left front indicator is inoperative.
- The left indicator indicator on the instrument panel cluster flashes rapidly.

DTC B3949

- The right front indicator is inoperative.
- The right indicator indicator on the instrument panel cluster flashes rapidly.

Conditions for Clearing the DTC

- The condition responsible for setting the DTC no longer exists.
- A history DTC will clear once 100 consecutive malfunction free vehicle ON/OFF switch cycles have occurred.

Reference Information

Schematic Reference

- Exterior Lamps Schematics
- Body Control System Schematics

Connector End View Reference

Component Connector End Views

Description and Operation

Exterior Lighting Systems Description and Operation

Electrical Information Reference

- Circuit Testing
- Connector Repairs

- Testing for Intermittent Conditions and Poor Connections
- Wiring Repairs

Scan Tool Reference

Control Module References for scan tool information

Circuit/System Testing

DTC B3948

1. Vehicle OFF, disconnect the X5 harness connector at the K9 Body Control Module.
2. Vehicle in Service Mode, verify that a test lamp illuminates between the B+ circuit terminal 3 and ground.
   If the test lamp does not illuminate, test the B+ circuit for a short to ground or an open/high resistance.
3. Vehicle OFF, connect the X5 harness connector at the K9 Body Control Module.
4. Disconnect the harness connector at the E4N Sidelight/Indicator Lamp - Left front.
5. Vehicle OFF, exterior lamps OFF, test for less than 5 Ω between the ground circuit terminal 1 and ground.
   If greater than the specified range, test the ground circuit for an open/high resistance.
6. Connect a test lamp between the control circuit terminal 3 and ground.
7. Vehicle in Service Mode, command the Left Front Indicator Lamp ON and OFF with a scan tool. The test lamp should turn ON and OFF when changing between the commanded states.
   If the test lamp is always ON, test the control circuit for a short to voltage. If the circuit tests normal, replace the K9 Body Control Module.
   If the test lamp is always OFF, test the control circuit for a short to ground or an open/high resistance. If the circuits test normal, replace the K9 Body Control Module.
8. If all circuits test normal, replace the E4N Sidelight/Indicator Lamp - Left front.

DTC B3949

1. Vehicle OFF, disconnect the X2 harness connector at the K9 Body Control Module.
2. Vehicle in Service Mode, verify that a test lamp illuminates between the B+ circuit terminal 3 and ground.
   If the test lamp does not illuminate, test the B+ circuit for a short to ground or an open/high resistance.
3. Vehicle OFF, connect the X2 harness connector at the K9 Body Control Module.
4. Disconnect the harness connector at the E4P Sidelight/Indicator Lamp - Right front.
5. Vehicle OFF, exterior lamps OFF, test for less than 5 Ω between the ground circuit terminal 1 and ground.
   If greater than the specified range, test the ground circuit for an open/high resistance.
6. Connect a test lamp between the control circuit terminal 3 and ground.
7. Vehicle in Service Mode, command the Right Front Indicator Lamp ON and OFF with a scan tool. The test lamp should turn ON and OFF when changing between the commanded states.
   If the test lamp is always ON, test the control circuit for a short to voltage. If the circuit tests normal, replace the K9 Body Control Module.
   If the test lamp is always OFF, test the control circuit for a short to ground or an open/high resistance. If the circuits test normal, replace the K9 Body Control Module.

8. If all circuits test normal, replace the E4P Sidelight/Indicator Lamp - Right front.

Repair Instructions

Perform the Diagnostic Repair Verification after completing the diagnostic procedure.

- Front Indicator Lamp Replacement : Volt → Ampera
- Control Module References for BCM replacement, programming and setup

&#169© Copyright Chevrolet. All rights reserved

DTC C0277 or C0890

Diagnostic Instructions

- Perform the Diagnostic System Check - Vehicle prior to using this diagnostic procedure.
- Review Strategy Based Diagnosis for an overview of the diagnostic approach.
- Diagnostic Procedure Instructions provides an overview of each diagnostic category.

DTC Descriptors

DTC C0277 06: Brake Pedal Position Sensor Circuit Low Voltage/Open

DTC C0277 07: Brake Pedal Position Sensor Circuit High Voltage

DTC C0277 09: Brake Pedal Position Sensor Circuit Too Fast Transitions

DTC C0277 4B: Brake Pedal Position Sensor Circuit Calibration Not Learned

DTC C0890 03: Control Module Voltage Reference Output 3 Circuit Low Voltage

DTC C0890 07: Control Module Voltage Reference Output 3 Circuit High Voltage

Diagnostic Fault Information

Circuit	Short to Ground	Open/High Resistance	Short to Voltage	Signal Performance
F10DL Fuse B+	C0890 03, B101E 43, B1395 03, B1517 07, U0121 00, U0128 00, U0422 71	C0890 03, B101E 43, B1395 03, B1517 07, U0121 00, U0128 00, U0422 71	--	--
Brake Pedal Position Sensor 5V Reference	C0277 06, C0890 03, U0422 71, C0561 71	C0277 06, U0422 71, C0561 71	C0277 07, C0890 07, U0422 71, C0561 71	-
Brake Pedal Position Sensor Signal	C0277 06, U0422 71, C0561 71	C0277 06, U0422 71, C0561 71	C0277 07, C0890 07, U0422 71, C0561 71	C0277 09

Centre High Mounted Brake Lamp Control	2	2	2	--
Brake/Indicator Lamp Control - Left	1	1	1	--
Brake/Indicator Lamp Control - Right	1	1	1	--
Brake Pedal Position Sensor Low Reference	-	C0277 06, U0422 71, C0561 71	1	--
Centre High Mounted Brake Lamp Ground	--	2	--	--
Tail/Brake Lamp Ground - Left	--	1	--	--
Tail/Brake Lamp Ground - Right	--	1	--	--
1. Brake Lamps Malfunction 2. Centre High Mounted Brake Lamp Malfunction				

Circuit/System Description

The brake pedal position (BPP) sensor is used to sense the action of the driver application of the brake pedal. The BPP sensor provides an analogue voltage signal that will increase as the brake pedal is applied. The body control module (BCM) provides a low reference signal and a 5 V reference voltage to the BPP sensor. When the variable signal reaches a voltage threshold indicating the brakes have been applied, the BCM will apply battery voltage to the left and right brake lamp control circuits as well as the centre high mounted brake lamp control circuit illuminating the left and right brake lamps and the centre high mounted brake lamp.

Conditions for Running the DTC

- Battery voltage must be between 9-16 V.
- Brakes applied.

Conditions for Setting the DTC

DTC C0277 06

- The BCM detects a short to ground or an open/high resistance in the BPP sensor 5 V reference circuit.
- The BCM detects a short to ground or an open/high resistance in the BPP sensor signal circuit.
- The BCM detects an open/high resistance in the BPP sensor low reference circuit.

DTC C0277 07

- The BCM detects a short to voltage in the BPP sensor 5 V reference circuit.
- The BCM detects a short to voltage in the BPP sensor signal circuit.

DTC C0277 09

The BCM detects the BPP sensor signal is changing faster than possible under normal operating conditions.

DTC C0277 4B

The DTC will set when the BPP sensor home position is not learned.

DTC C0890 03

- The BCM detects a short to ground in the BPP sensor 5 V reference circuit.
- The BCM detects a short to ground or an open/high resistance in the F10DL fuse B+ circuit.

DTC C0890 07

- The BCM detects a short to voltage in the BPP sensor 5 V reference circuit.
- The BCM detects a short to voltage in the BPP sensor low reference circuit.

Action Taken When the DTC Sets

DTC C0277 06 and C0890 03

- The vehicle will not start with a short to ground or an open/high resistance on the BPP sensor 5 V reference circuit or the BPP sensor signal circuit.
- The vehicle will start with an open/high resistance on the BPP sensor low reference circuit without applying the brake pedal.

DTC C0277 07 and C0890 07

The vehicle will not start with a short to voltage on the BPP sensor 5 V reference circuit or the BPP sensor signal circuit.

Conditions for Clearing the DTC

- The condition responsible for setting the DTC no longer exists.
- For DTC C0277 4B a successful brake pedal position sensor calibration has been performed.

- A history DTC will clear once 50 consecutive malfunction free vehicle ON/OFF switch cycles have occurred.
- A DTC will not clear the current status until the next ignition cycle.

Reference Information

Schematic Reference

- Exterior Lamps Schematics
- Body Control System Schematics

Connector End View Reference

Component Connector End Views

Description and Operation

Exterior Lighting Systems Description and Operation

Electrical Information Reference

- Circuit Testing
- Connector Repairs
- Testing for Intermittent Conditions and Poor Connections
- Wiring Repairs

Scan Tool Reference

Control Module References for scan tool information

Circuit/System Testing

DTC C0277 06, C0277 07, C0890 03, and C0890 07

1. Vehicle OFF, disconnect the harness connector at the B22 Brake Pedal Position Sensor.
2. Vehicle in Service Mode, verify that a test lamp illuminates between B+ and the low reference circuit terminal C.
   If the test lamp does not illuminate, test the low reference circuit for a short to voltage or an open/high resistance. If the circuit tests normal, replace the K9 Body Control Module.
3. Test for 4.8-5.2 V between the 5 V reference circuit terminal A and ground.

If less than the specified range, test the 5 V reference circuit for a short to ground or an open/high resistance. If the circuit tests normal, replace the K9 Body Control Module.

If greater than the specified range, test the 5 V reference circuit for a short to voltage. If the circuit tests normal, replace the K9 Body Control Module.

4. Verify the scan tool Brake Pedal Applied parameter is Inactive.
   If not the specified value, test the signal circuit terminal B for a short to voltage. If the circuit tests normal, replace the K9 Body Control Module.
5. Vehicle OFF, install a 3 A fused jumper wire between the 5 V reference circuit terminal A and signal circuit terminal B.
6. Vehicle in Service Mode, verify the scan tool Brake Pedal Applied parameter is Active.
   If not the specified value, test the signal circuit for a short to ground or an open/high resistance. If the circuit tests normal, replace the K9 Body Control Module.
7. If all circuits test normal, replace the B22 Brake Pedal Position Sensor.

DTC C0277 4B

1. Verify that the DTC sets under the Conditions for Running and Setting.
2. Perform the brake pedal position sensor calibration procedure. Refer to Brake Pedal Position Sensor Calibration
3. Operate the vehicle within the Conditions for Running and Setting the DTC and verify the DTC does not reset.
   If DTC C0277 4B resets as current, replace the B22 Brake Pedal Position Sensor.

DTC C0277 09

1. Replace the brake pedal position sensor.
2. Perform the brake pedal position sensor calibration procedure. Refer to Brake Pedal Position Sensor Calibration
3. Operate the vehicle within the Conditions for Running and Setting the DTC and verify the DTC does not reset.
   If DTC C0277 09 resets as current, replace the K9 Body Control Module.

Repair Instructions

Perform the Diagnostic Repair Verification after completing the diagnostic procedure.

- Brake Pedal Position Sensor Calibration
- Brake Pedal Position Sensor Replacement
- Control Module References for BCM replacement, programming and setup

&#169© Copyright Chevrolet. All rights reserved

DTC C0297

Diagnostic Instructions

- Perform the Diagnostic System Check - Vehicle prior to using this diagnostic procedure.
- Review Strategy Based Diagnosis for an overview of the diagnostic approach.
- Diagnostic Procedure Instructions provides an overview of each diagnostic category.

DTC Descriptor

DTC C0297 02: Brake Applied Output Circuit Short-circuit to Ground

Diagnostic Fault Information

Circuit	Short to Ground	Open/High Resistance	Short to Voltage	Signal Performance
Brake Applied Signal	C0297 02	C0297 02	1	--
1. Cruise Control Malfunction				

Circuit/System Description

The brake pedal position sensor is used to sense the action of the driver application of the brake pedal. The brake pedal position sensor provides an analogue voltage signal that will increase as the brake pedal is applied. The body control module (BCM) provides a low reference signal and a 5 V reference voltage to the brake pedal position sensor. When the variable signal reaches a voltage threshold indicating the brakes have been applied, the BCM will apply battery voltage to the right and left brake lamp control circuits, engine control module (ECM), and centre high mounted brake lamp control circuit.

Conditions for Running the DTC

- Battery voltage must be between 9-16 V.
- Brakes applied.

Conditions for Setting the DTC

The BCM detects a short to ground or an open/high resistance on the brake applied signal circuit.

Action Taken When the DTC Sets

The cruise control system is disabled.

Conditions for Clearing the DTC

- The condition responsible for setting the DTC no longer exists.
- A history DTC will clear once 50 consecutive malfunction free vehicle ON/OFF switch cycles have occurred.

Diagnostic Aids

Verify that the brake pedal position sensor is properly calibrated.

Reference Information

Schematic Reference

Exterior Lamps Schematics

Connector End View Reference

Component Connector End Views

Description and Operation

Exterior Lighting Systems Description and Operation

Electrical Information Reference

- Circuit Testing
- Connector Repairs
- Testing for Intermittent Conditions and Poor Connections
- Wiring Repairs

Scan Tool Reference

Control Module References for scan tool information

Circuit/System Testing

1. Vehicle OFF, disconnect the X1 harness connector at the K20 Engine Control Module.
2. Connect a test lamp between the signal circuit terminal 33 and ground.
3. Vehicle in Service Mode, observe the test lamp while pressing and releasing the brake pedal. The test lamp should turn ON and OFF as the brake pedal is pressed and released.
   If the test lamp is always ON, test the signal circuit for a short to voltage. If the circuit tests normal, replace the K9 Body Control Module.
   If the test lamp is always OFF, test the signal circuit for a short to ground or an open/high resistance. If the circuit tests normal, replace the K9 Body Control Module.
4. If all circuits test normal, replace the K20 Engine Control Module.

Repair Instructions

Perform the Diagnostic Repair Verification after completing the diagnostic procedure.

- Brake Pedal Position Sensor Calibration
- Control Module References for BCM or ECM replacement, programming and setup

&#169© Copyright Chevrolet. All rights reserved

Symptoms - Lighting

Note: The following steps must be completed before using a symptom table.

- Perform the Diagnostic System Check - Vehicle before using a symptom table in order to verify that all of the following conditions are true:
  - There are no DTCs set.
  - The control modules can communicate via the serial data link.
- Review the system description and operation in order to familiarise yourself with the system functions. Refer to the following:
  - Exterior Lighting Systems Description and Operation
  - Interior Lighting Systems Description and Operation

Visual/Physical Inspection

- Inspect for aftermarket devices which could affect the operation of the lighting system. Refer to Checking Aftermarket Accessories .
- Inspect the easily accessible or visible system components for obvious damage or conditions which could cause the symptom.

Intermittent

Thoroughly inspect the wiring and connectors. An incomplete inspection of the wiring and connectors may result in misdiagnosis causing part replacement with the reappearance of the malfunction. If an intermittent malfunction exists, refer to Testing for Intermittent Conditions and Poor Connections .

Symptom List

Refer to a symptom diagnostic procedure from the following list in order to diagnose the symptom:

- Reverse Lamps Malfunction
- Courtesy Lamps Malfunction
- Interior Lights Malfunction
- Hazard Lamps Malfunction
- Headlamps Malfunction
- Interior Backlighting Malfunction
- Sidelight, Number Plate, and/or Tail Lamps Malfunction

- Brake Lamps Malfunction
- Indicator Lamps and/or Indicators Malfunction

&#169© Copyright Chevrolet. All rights reserved

Automatic Light Malfunction

Diagnostic Instructions

- Perform the Diagnostic System Check - Vehicle prior to using this diagnostic procedure.
- Review Strategy Based Diagnosis for an overview of the diagnostic approach.
- Diagnostic Procedure Instructions provides an overview of each diagnostic category.

Diagnostic Fault Information

Circuit	Short to Ground	Open/High Resistance	Short to Voltage	Signal Performance
Ambient Light Sensor Signal	B2645 03	B2645 03	B2645 07	--
Ground	--	1	--	--
1. Daytime Running Light Malfunction DTC B2645 03 - Ambient Light Sensor Circuit Low Voltage DTC B2645 07 - Ambient Light Sensor Circuit High Voltage				

Circuit/System Description

The ambient light/sunload sensor is used to monitor outside lighting conditions. The ambient light/sunload sensor provides a voltage signal that will vary between 1.4-4.5 V depending on outside lighting conditions. The body control module (BCM) monitors the ambient light/sunload sensor signal circuit to determine if outside lighting conditions are correct for either daytime running lights or automatic lamp control when the headlamp switch is in the AUTO position. In daylight conditions the BCM will command the daytime running lights ON. During low light conditions the BCM will command the dipped beam headlamps ON.

Reference Information

Schematic Reference

Headlamps/Daytime Running Lamps (DRL) Schematics

Connector End View Reference

Component Connector End Views

Description and Operation

Exterior Lighting Systems Description and Operation

Electrical Information Reference

- Circuit Testing
- Connector Repairs
- Testing for Intermittent Conditions and Poor Connections
- Wiring Repairs

Scan Tool Reference

Control Module References for scan tool information

Circuit/System Verification

Vehicle in Service Mode, observe the scan tool Ambient Light Sensor parameter. The reading should be between 1.4-4.5 V and change with ambient light changes.

If the reading is out of specified range, verify that DTC B2645 is not set. If the DTC is set, refer to DTC B2645 .

Circuit/System Testing

1. Vehicle OFF, disconnect the harness connector at the B10B Ambient Light/Sunload Sensor.
2. Test for less than 5 Ω between ground circuit harness connector terminal 6 and ground.
   If greater than the specified range, test the low reference circuit for an open/high resistance.
3. Vehicle in Service Mode test for 4.8-5.2 V between B10B Ambient Light/Sunload Sensor signal circuit harness connector terminal 5 and ground.
   If greater than the specified range, test the signal circuit for a short to voltage. If the circuit tests normal, replace the K9 Body Control Module.
   If less than the specified range, test the signal circuit for a short to ground or an open/high resistance. If the circuit tests normal, replace the K9 Body Control Module.
4. If all circuits test normal, replace the B10B Ambient Light/Sunload Sensor.

Component Testing

Static Test

1. Vehicle in Service Mode, observe the scan tool Ambient Light Sensor parameter. The reading should be between 1.4-4.5 V and change with ambient light changes.

2. Test the B10B Ambient Light/Sunload Sensor by varying the ambient light while monitoring the sensors voltage output.
3. Verify that the voltage output is within the range of the specification.
   If not within the specified range, replace the B10B Ambient Light/Sunload Sensor.

Repair Instructions

Perform the Diagnostic Repair Verification after completing the diagnostic procedure.

- Sun Load Temperature and Headlamp Automatic Control Ambient Light Sensor Replacement
- Control Module References for BCM replacement, programming and setup

&#169© Copyright Chevrolet. All rights reserved

Reverse Lamps Malfunction

Diagnostic Instructions

- Perform the Diagnostic System Check - Vehicle prior to using this diagnostic procedure.
- Review Strategy Based Diagnosis for an overview of the diagnostic approach.
- Diagnostic Procedure Instructions provides an overview of each diagnostic category.

Diagnostic Fault Information

Circuit	Short to Ground	Open/High Resistance	Short to Voltage	Signal Performance
F7DR (interior lamps) Fuse B+	B2545 01, B2545 04, B2615 02	B2545 01, B2545 04, B2615 02	--	--
Reverse Lamp Control	B2545 02	B2545 01, B2545 04	1	--
Reverse Lamp Ground	--	1	--	--
1. Reverse Lamps Malfunction				

Circuit/System Description

With the vehicle ON and the transmission in the REVERSE position, the transmission control module (TCM) sends a serial data message to the body control module (BCM). The message indicates that the gear selector is in the REVERSE position. The BCM applies battery voltage to the reverese lamp control circuit illuminating the reverse lamps. Once the driver moves the gear selector out of the REVERSE position, a message is sent by the TCM via serial data requesting the BCM to remove battery voltage from the reverse lamps control circuit. The engine must be ON for the reverse lamps to operate.

Reference Information

Schematic Reference

- Exterior Lamps Schematics
- Body Control System Schematics

Connector End View Reference

Component Connector End Views

Description and Operation

Exterior Lighting Systems Description and Operation

Electrical Information Reference

- Circuit Testing
- Connector Repairs
- Testing for Intermittent Conditions and Poor Connections
- Wiring Repairs

Scan Tool Reference

Control Module References for scan tool information

Circuit/System Testing

1. Vehicle OFF, disconnect the X5 harness connector at the K9 Body Control Module.
2. Vehicle in Service Mode, verify that a test lamp illuminates between the B+ circuit terminal 4 and ground.
   If the test lamp does not illuminate, test the B+ circuit for a short to ground or an open/high resistance.
3. Vehicle OFF, connect the X5 harness connector at the K9 Body Control Module.
4. Disconnect the harness connector at the E5 Reverse Lamp.
5. Vehicle OFF, exterior lamps OFF, test for less than 5 Ω between the ground circuit terminal B and ground.
   If greater than the specified range, test the ground circuit for an open/high resistance.
6. Connect a test lamp between the control circuit terminal A and ground.
7. Vehicle in Service Mode, command the Reverse Lamps ON and OFF with a scan tool. The test lamp should turn ON and OFF when changing between the commanded states.
   If the test lamp is always ON, test the control circuit for a short to voltage. If the circuit tests normal, replace the K9 Body Control Module.
   If the test lamp is always OFF, test the control circuit for a short to ground or an open/high resistance. If the circuit tests normal, replace the K9 Body Control Module.
8. If all circuits test normal, replace the E5 Reversing Light.

Repair Instructions

Perform the Diagnostic Repair Verification after completing the diagnostic procedure.

- Reverse Lamp Bulb Replacement
- Control Module References for BCM replacement, programming and setup

&#169© Copyright Chevrolet. All rights reserved

Courtesy Lamps Malfunction

Diagnostic Instructions

- Perform the Diagnostic System Check - Vehicle prior to using this diagnostic procedure.
- Review Strategy Based Diagnosis for an overview of the diagnostic approach.
- Diagnostic Procedure Instructions provides an overview of each diagnostic category.

Diagnostic Fault Information

Circuit	Short to Ground	Open/High Resistance	Short to Voltage	Signal Performance
F7DR (interior lamps) Fuse B+	B2545 01, B2545 04, B2615 02	B2545 01, B2545 04, B2615 02	--	--
Courtesy Lamp Control - Terminal 2 X7	B1480 02	1	1	--
Dome/Reading Lamps - Front Ground	--	1	--	--
Sun Visor Mirror Lamp - Left Ground	--	1	--	--
Sun Visor Mirror Lamp - Right Ground	--	1	--	--
1. Courtesy Lamps Malfunction				

Circuit/System Description

The body control module (BCM) supplies battery voltage to the dome/reading lamps - front and left and right sun visor lamps via the courtesy lamp control circuit. When a sun visor mirror is opened, the switch contact close allowing battery voltage to flow illuminating the respective lamps. The front reading lamps are controlled by individual switches that are activated by the operator when additional cabin lighting is required. In the event that any of these courtesy lamps were to remain illuminated for more than 10 min with the vehicle ON/OFF switch in the OFF position and no doors opened, the BCM will deactivate the courtesy lamp control circuit to prevent total battery discharge.

Diagnostic Aids

When the F7DR (interior lamps) fuse is open, both dome lamps, sun visor lamps, reading lamps, and reverse lamps will be inoperative. DTC B2545 will also set for the reverse lamps when the vehicle is placed in the reverse gear.

Reference Information

Schematic Reference

- Interior Lights Schematics
- Body Control System Schematics

Connector End View Reference

Component Connector End Views

Description and Operation

Interior Lighting Systems Description and Operation

Electrical Information Reference

- Circuit Testing
- Connector Repairs
- Testing for Intermittent Conditions and Poor Connections
- Wiring Repairs

Scan Tool Reference

Control Module References for scan tool information

Circuit/System Testing

1. Vehicle OFF, disconnect the harness connector at the inoperative courtesy lamp.
2. Vehicle OFF, scan tool disconnected, all doors closed, all accessories OFF, and wait 2 minutes. Test for less than 10 Ω between the appropriate ground circuit terminal listed below and ground:
   - E37F Dome/Reading Lamps - Front terminal 6
   - E31L Sun Visor Mirror Lamp - Left terminal B
   - E31R Sun Visor Mirror Lamp - Right terminal B

   If greater than the specified range, test the ground circuit for an open/high resistance.
3. Connect a test lamp between the appropriate control circuit terminal listed below and ground:
   - E37F Dome/Reading Lamps - Front terminal 1
   - E31L Sun Visor Mirror Lamp - Left terminal A
   - E31R Sun Visor Mirror Lamp - Right terminal A

4. Vehicle in Service Mode, command the Inadvertent Load ON and OFF with a scan tool. The test lamp should turn ON and OFF when changing between the commanded states.
   If the test lamp is always ON, test the control circuit for a short to voltage. If the circuit tests normal, replace the K9 Body Control Module.
   If the test lamp is always OFF, test the control circuit for a short to ground or open/high resistance. If the circuit tests normal, replace the K9 Body Control Module.
5. If all circuits test normal, replace the inoperative courtesy lamp.

Repair Instructions

Perform the Diagnostic Repair Verification after completing the diagnostic procedure.

- Sun Visor Illuminated Mirror Lamp Bulb Replacement
- Dome and Reading Lamp Replacement
- Control Module References for BCM replacement, programming and setup

&#169© Copyright Chevrolet. All rights reserved

Interior Lights Malfunction

Diagnostic Instructions

- Perform the Diagnostic System Check - Vehicle prior to using this diagnostic procedure.
- Review Strategy Based Diagnosis for an overview of the diagnostic approach.
- Diagnostic Procedure Instructions provides an overview of each diagnostic category.

Diagnostic Fault Information

Circuit	Short to Ground	Open/High Resistance	Short to Voltage	Signal Performance
F7DR (interior lamps) Fuse B+	B2545 01, B2545 04, B3950 01, B3950 04	B2545 01, B2545 04, B3950 01, B3950 04	--	--
Interior Lamps Control	B2545 01, B2545 04, B3950 01, B3950 04	1	1	--
Dome Lamp Switch Cancel Signal	2	2	2	--
Interior light Switch ON Signal	2	2	2	--
Dome Lamp Ground - Front	--	1, 2	--	--
Dome Lamp Ground - Middle	--	1	--	--
1. Interior Lights Malfunction 2. Dome Lamp Switch Malfunction				

Circuit/System Description

The dome lamp switch has 3 positions: DOOR, OFF, and ON. The ON position provides a ground for continuous operation and the dome lamps will remain illuminated until the switch is placed in either the DOOR or OFF position. When in the DOOR position, the dome lamps operation is controlled by the body control module (BCM). When any door is opened, the door ajar switch contacts close and the BCM receives a door open input. The BCM illuminates the dome lamps when any door is opened or a door lock/unlock request is activated with the key fob. After all doors have been closed, the dome lamps will remain illuminated approximately 3 seconds after the last door closes. When the driver places the dome lamp switch in the OFF position, the dome lamps will be disabled. In the event that the dome lamps were to remain illuminated for more than 10 minutes with the vehicle ON/OFF switch in the OFF position and no doors opened, the BCM will deactivate the dome lamps control circuit to prevent total battery discharge.

Reference Information

Schematic Reference

- Interior Lights Schematics
- Body Control System Schematics

Connector End View Reference

Component Connector End Views

Description and Operation

Interior Lighting Systems Description and Operation

Electrical Information Reference

- Circuit Testing
- Connector Repairs
- Testing for Intermittent Conditions and Poor Connections
- Wiring Repairs

Scan Tool Reference

Control Module References for scan tool information

Circuit/System Verification

1. Vehicle in Service Mode, observe the scan tool Door Ajar Switch parameter for each door while opening and closing each vehicle door. The parameter should change between Active and Inactive.
   If the parameter does not change between the selected states, refer to Door Ajar Indicator Malfunction
2. Observe the scan tool Interior/Courtesy Lighting Master Switch parameter while placing the dome lamp switch in the Door, On, and Cancel positions. The parameter should change between Door, On, and Cancel.
   If the parameter does not change between the selected states, refer to Dome Lamp Switch Malfunction.
3. Command the Courtesy Lamps ON and OFF with a scan tool. The front and middle dome lamp should turn ON and OFF when changing between the commanded states.
   If one or both of the dome lamps do not turn ON and OFF when commanded, refer to Dome Lamps Malfunction.

Circuit/System Testing

Dome Lamp Switch Malfunction

1. Vehicle OFF, disconnect the harness connector at the E37F Dome/Reading Lamps - Front.
2. Vehicle OFF, scan tool disconnected, all doors closed, all accessories OFF, and wait 2 minutes. Test for less than 10 Ω between the ground circuit terminal 6 and ground.
   If greater than the specified range, test the ground circuit for an open/high resistance.
3. Vehicle in Service Mode, verify the scan tool Interior/Courtesy Lighting Master Switch parameter is Door.
   If the scan tool Interior/Courtesy Lighting Master Switch parameter is Cancel, test the signal circuit terminal 4 for a short to ground. If the circuit tests normal, replace the K9 Body Control Module.
   If the scan tool Interior/Courtesy Lighting Master Switch parameter is On, test the signal circuit terminal 5 for a short to ground. If the circuit tests normal, replace the K9 Body Control Module.
4. Install a 3 A fused jumper wire between the signal circuit terminal 4 and ground. Verify the scan tool Interior/Courtesy Lighting Master Switch parameter is Cancel.
   If not the specified value, test the signal circuit for a short to voltage or an open/high resistance. If the circuit tests normal, replace the K9 Body Control Module.
5. Install a 3 A fused jumper wire between the signal circuit terminal 5 and ground. Verify the scan tool Interior/Courtesy Lighting Master Switch parameter is On.
   If not the specified value, test the signal circuit for a short to voltage or an open/high resistance. If the circuit tests normal, replace the K9 Body Control Module.
6. If all circuits test normal, replace the E37F Dome/Reading Lamps - Front.

Interior Lights Malfunction

1. Vehicle OFF, disconnect the harness connector at the inoperative dome lamp.
2. Vehicle OFF, scan tool disconnected, all doors closed, all accessories OFF, and wait 2 minutes. Test for less than 10 Ω between the ground circuit terminal 6 and ground.
   If greater than the specified range, test the ground circuit for an open/high resistance.
3. Connect a test lamp between the control circuit terminal 2 and ground.
4. Vehicle in Service Mode, command the Courtesy Lamps ON and OFF with a scan tool. The test lamp should turn ON and OFF when changing between the commanded states.
   If the test lamp is always ON, test the control circuit for a short to voltage. If the circuit tests normal, replace the K9 Body Control Module.
   If the test lamp is always OFF, test the control circuit for a short to ground or an open/high resistance. If the circuit tests normal, replace the K9 Body Control Module.
5. If all circuits test normal, replace the inoperative dome lamp.

Repair Instructions

Perform the Diagnostic Repair Verification after completing the diagnostic procedure.

- Reading Lamp Replacement
- Dome and Reading Lamp Replacement
- Control Module References for BCM replacement, programming and setup

&#169© Copyright Chevrolet. All rights reserved

Hazard Lamps Malfunction

Diagnostic Instructions

- Perform the Diagnostic System Check - Vehicle prior to using this diagnostic procedure.
- Review Strategy Based Diagnosis for an overview of the diagnostic approach.
- Diagnostic Procedure Instructions provides an overview of each diagnostic category.

Diagnostic Fault Information

Circuit	Short to Ground	Open/High Resistance	Short to Voltage	Signal Performance
Hazard Lamps Switch Signal	1	1	1	B3596 00
Hazard Lamps Switch Ground	--	1	--	--
1. Hazard Lamps Malfunction				

Circuit/System Description

The hazard flashers may be activated in any power mode. The hazard switch signal circuit is momentarily grounded when the hazard switch is pressed. The body control module (BCM) responds to the hazard switch signal input by supplying battery voltage to all four indicator lamps in an ON and OFF duty cycle. When the hazard switch is activated, the BCM sends a serial data message to the instrument panel cluster requesting both indicator indicators to be cycled ON and OFF.

Reference Information

Schematic Reference

Exterior Lamps Schematics

Connector End View Reference

Component Connector End Views

Description and Operation

Exterior Lighting Systems Description and Operation

Electrical Information Reference

- Circuit Testing
- Connector Repairs
- Testing for Intermittent Conditions and Poor Connections
- Wiring Repairs

Scan Tool Reference

Control Module References for scan tool information

Circuit/System Verification

1. Vehicle in Service Mode, observe the scan tool Hazard Lamps Switch parameter while turning the hazard lamp switch ON and OFF. The parameter should change between Active and Inactive.
   If the parameter does not change between the commanded states, refer to Circuit/System Testing.
2. Observe the right and left indicator lamps while turning the hazard lamps switch ON and OFF. The right and left indicator lamps should flash ON and OFF while the hazard lamps switch is ON and remain OFF when the hazard lamps switch is OFF
   If the indicator lamps do not cycle between the selected states, refer to Indicator Lamps and/or Indicators Malfunction .

Circuit/System Testing

1. Vehicle OFF, disconnect the harness connector at the A20 Radio/HVAC Controls.
2. Vehicle OFF, scan tool disconnected, all doors closed, all accessories OFF, and wait 2 minutes. Test for less than 5 Ω between the ground circuit terminal 17 and ground.
   If greater than the specified range, test the ground circuit for an open/high resistance.
3. Vehicle in Service Mode, verify the scan tool Hazard Lamps Switch parameter is Inactive.
   If not the specified value, test the signal circuit terminal 16 for a short to ground. If the circuit tests normal, replace the K9 Body Control Module.
4. Install a 3 A fused jumper wire between the signal circuit terminal 16 and the ground circuit terminal 17. Verify the scan tool Hazard Lamps Switch parameter is Active.
   If not the specified value, test the signal circuit for a short to voltage or an open/high resistance. If the circuit tests normal, replace the K9 Body Control Module.
5. If all circuits test normal, replace the A20 Radio/HVAC Controls.

Repair Instructions

Perform the Diagnostic Repair Verification after completing the diagnostic procedure.

- Radio Control Assembly Replacement

- Control Module References for BCM replacement, programming and setup

&#169© Copyright Chevrolet. All rights reserved

Headlamps Malfunction

Diagnostic Instructions

- Perform the Diagnostic System Check - Vehicle prior to using this diagnostic procedure.
- Review Strategy Based Diagnosis for an overview of the diagnostic approach.
- Diagnostic Procedure Instructions provides an overview of each diagnostic category.

Diagnostic Fault Information

Circuit	Short to Ground	Open/High Resistance	Short to Voltage	Signal Performance
F4DR Fuse B+	1	1	--	--
F11DL Fuse B+	1	1	--	--
Headlamp Main Beam Relay Control	B2580 02, B2580 04	B2580 02, B2580 04	B2580 01	--
Dipped Beam Headlamp Control - Left	1	1	1	--
Dipped Beam Headlamp Control - Right	1	1	1	--
Main Beam Headlamp Control - Left	2	2	2	--
Main Beam Headlamp Control - Right	2	2	2	--
Indicator/Multifunction Switch Headlamps OFF Signal	B257A 00	3	3	--
Indicator/Multifunction Switch Headlamps ON Signal	B257A 00	3	3	--
Indicator/Multifunction Switch Flash To Pass Signal	B3806 00	3	3	--
Indicator/Multifunction Switch Main Beam Signal	B3650 08	3	3	--
Headlamp Ground - Left	--	1, 2	--	--
Headlamp Ground - Right	--	1, 2	--	--
Indicator/Multifunction Switch Ground	-	3	--	--

1. Headlamps Malfunction - Dipped beam

2. Headlamps Malfunction - Main beam

3. Indicator/Multifunction Switch Malfunction

Circuit/System Description

For headlamp operation, the body control module (BCM) monitors three signal circuits from the indicator/multifunction switch. When the indicator/multifunction switch is in the AUTO position, the three signal circuits are open and the BCM relies on the ambient light sensor input to turn the headlamps and daytime running lamps (DRL) ON and OFF. When the indicator/multifunction switch is placed in the OFF position, the indicator/multifunction switch headlamps OFF signal circuit is grounded, indicating to the BCM that the exterior lamps should be turned OFF. With the indicator/multifunction switch in the PARK lamps position, the indicator/multifunction switch sidelights ON signal circuit is grounded, indicating that the sidelights have been requested. When the indicator/multifunction switch is in the HEADLAMP position, both the indicator/multifunction switch sidelights ON signal circuit and the indicator/multifunction switch headlamps ON signal circuit are grounded. The BCM responds by commanding the sidelights and headlamps ON.

The main beam and flash to pass functions are contained within the indicator/multifunction switch. The BCM provides the indicator/multifunction switch with two signal circuits, the main beam signal circuit and the flash to pass signal circuit. When the dipped beam headlamps are ON and the indicator/multifunction switch is placed in the main beam position, ground is applied to the BCM through the main beam signal circuit. The BCM responds to the main beam request by applying ground to the main beam relay control circuit which energises the main beam relay. With the main beam relay energised, the switch contacts close allowing battery voltage to flow through the main beam fuses to the main beam control circuits illuminating the main beam headlamps.

When the indicator/multifunction switch is momentarily placed in the flash to pass position, ground is applied to the BCM through the flash to pass signal circuit. The BCM responds by applying ground to the main beam relay control circuit which energises the main beam relay illuminating the main beams for a brief moment or until the flash to pass switch is released.

Reference Information

Schematic Reference

- Headlamps/Daytime Running Lamps (DRL) Schematics
- Body Control System Schematics

Connector End View Reference

Component Connector End Views

Description and Operation

Exterior Lighting Systems Description and Operation

Electrical Information Reference

- Circuit Testing
- Connector Repairs
- Testing for Intermittent Conditions and Poor Connections

- Wiring Repairs

Scan Tool Reference

Control Module References for scan tool information

Circuit/System Verification

1. Vehicle in Service Mode, observe the scan tool Headlamps On Switch parameter while turning the dipped beam headlamps ON and OFF with the indicator/multifunction switch. The parameter should change between Active and Inactive.
   If the parameter does not change between the commanded states, refer to Indicator/Multifunction Switch Malfunction.
2. Observe the scan tool Automatic Headlamps Disable Switch parameter while applying and releasing the automatic lamp control disable switch. The parameter should change between Active and Inactive.
   If the parameter does not change between the commanded states, refer to Indicator/Multifunction Switch Malfunction.
3. Observe the scan tool Main Beam Select Switch parameter while applying and releasing the main beam select switch. The parameter should change between Active and Inactive.
   If the parameter does not change between the commanded states, refer to Indicator/Multifunction Switch Malfunction.
4. Observe the scan tool Headlamps Flash Switch parameter while applying and releasing the flash to pass switch. The parameter should change between Active and Inactive.
   If the parameter does not change between the commanded states, refer to Indicator/Multifunction Switch Malfunction.
5. Command the Left Headlamp Dipped Beam ON and OFF with a scan tool. The left dipped beam headlamp should turn ON and OFF when commanded.
   If the left dipped beam headlamp does not turn ON and OFF when commanded, refer to Headlamps Malfunction - Dipped Beam.
6. Command the Right Headlamp Dipped Beam ON and OFF with a scan tool. The right dipped beam headlamp should turn ON and OFF when commanded.
   If the right dipped beam headlamp does not turn ON and OFF when commanded, refer to Headlamps Malfunction - Dipped Beam.
7. Dipped beam headlamps ON, command the Main Beams ON and OFF with a scan tool. The main beam headlamps should turn ON and OFF when commanded.
   If the main beam headlamps do not turn ON and OFF when commanded, refer to Headlamps Malfunction - Main Beam.
8. Observe the main beam indicator while applying and releasing the main beam select switch. The main beam indicator should turn ON and OFF when changing between the commanded states.
   If the main beam indicator does not illuminate or remains illuminated at all times, replace the P16 Instrument Cluster.

Circuit/System Testing

Indicator/Multifunction Switch Malfunction

1. Vehicle OFF, disconnect the harness connector at the S78 Indicator/Multifunction Switch.
2. Vehicle OFF, scan tool disconnected, all doors closed, all accessories OFF, and wait 2 minutes. Test for less than 10 Ω between the ground circuit terminal 6 and ground.
   If greater then the specified range, test the ground circuit for an open/high resistance.
3. Vehicle in Service Mode, verify the scan tool Headlamps On Switch parameter is Inactive.

If not the specified value, test the signal circuit terminal 2 for a short to ground. If the circuit tests normal, replace the K9 Body Control Module.

4. Verify the scan tool Automatic Headlamps Disable Switch parameter is Inactive.
   If not the specified value, test the signal circuit terminal 9 for a short to ground. If the circuit tests normal, replace the K9 Body Control Module.
5. Verify the scan tool Main Beam Select Switch parameter is Inactive.
   If not the specified value, test the signal circuit terminal 11 for a short to ground. If the circuit tests normal, replace the K9 Body Control Module.
6. Verify the scan tool Headlamps Flash Switch parameter is Inactive.
   If not the specified value, test the signal circuit terminal 12 for a short to ground. If the circuit tests normal, replace the K9 Body Control Module.
7. Install a 3 A fused jumper wire between the signal circuit terminal 2 and ground. Verify the scan tool Headlamps On Switch parameter is Active.
   If not the specified value, test the signal circuit for a short to voltage or an open/high resistance. If the circuit tests normal, replace the K9 Body Control Module.
8. Install a 3 A fused jumper wire between the signal circuit terminal 9 and ground. Verify the scan tool Automatic Headlamps Disable Switch parameter is Active.
   If not the specified value, test the signal circuit for a short to voltage or an open/high resistance. If the circuit tests normal, replace the K9 Body Control Module.
9. Install a 3 A fused jumper wire between the signal circuit terminal 11 and ground. Verify the scan tool Main Beam Select Switch parameter is Active.
   If not the specified value, test the signal circuit for a short to voltage or an open/high resistance. If the circuit tests normal, replace the K9 Body Control Module.
10. Install a 3 A fused jumper wire between the signal circuit terminal 12 and ground. Verify the scan tool Headlamps Flash Switch parameter is Active.
    If not the specified value, test the signal circuit for a short to voltage or an open/high resistance. If the circuit tests normal, replace the K9 Body Control Module.
11. If all circuits test normal, replace the S78 Indicator/Multifunction Switch.

Headlamps Malfunction - Dipped beam

1. Vehicle OFF, disconnect the X1 harness connector at the K9 Body Control Module.
2. Vehicle in Service Mode, verify that a test lamp illuminates between the B+ circuit terminal 2 and ground.
   If the test lamp does not illuminate, test the B+ circuit for a short to ground or an open/high resistance.
3. Verify that a test lamp illuminates between the B+ circuit terminal 3 and ground.
   If the test lamp does not illuminate, test the B+ circuit for a short to ground or an open/high resistance.
4. Vehicle OFF, connect the X1 harness connector at the K9 Body Control Module.
5. Disconnect the harness connector at the inoperative headlamp.
6. Vehicle OFF, exterior lamps OFF, test for less than 5 Ω between the ground circuit terminal 5 and ground.
   If greater than the specified range, test the ground circuit for an open/high resistance.
7. Connect a test lamp between the control circuit terminal 1 and ground.
8. Vehicle in Service Mode, command the appropriate Headlamp Dipped Beam ON and OFF with a scan tool. The test lamp should turn ON and OFF when changing between the commanded states.
   If the test lamp is always ON, test the control circuit for a short to voltage. If the circuit tests normal, replace the K9 Body Control Module.
   If the test lamp is always OFF, test the control circuit for a short to ground or an open/high resistance. If the circuits test normal, replace the K9 Body Control Module.
9. If all circuits test normal, replace the inoperative headlamp.

Headlamps Malfunction - Main beam

1. Vehicle OFF, disconnect the X1 harness connector at the X50A Fuse Block - Under-bonnet.
2. Connect a test lamp between the control circuit terminal 18 and B+.

3. Vehicle in Service Mode, command the Main Beams ON and OFF with a scan tool. The test lamp should turn ON and OFF when changing between the commanded states.
   If the test lamp is always ON, test the control circuit for a short to ground. If the circuit tests normal, replace the K9 Body Control Module.
   If the test lamp is always OFF, test the control circuit for a short to voltage or an open/high resistance. If the circuit tests normal, replace the K9 Body Control Module.
4. Vehicle OFF, connect the X2 harness connector at the X50A Fuse Block - Under-bonnet.
5. Disconnect the harness connector at the inoperative headlamp.
6. Vehicle OFF, exterior lamps OFF, test for less than 5 Ω between the ground circuit terminal 4 and ground.
   If greater than the specified range, test the ground circuit for an open/high resistance.
7. Connect a test lamp between the control circuit terminal 3 and ground.
8. Vehicle in Service Mode, dipped beam headlamps ON, command the Main Beams ON and OFF with a scan tool. The test lamp should turn ON and OFF when changing between the commanded states.
   If the test lamp is always ON, test the control circuit for a short to voltage. If the circuit tests normal, replace the X50A Fuse Block - Under-bonnet.
   If the test lamp is always OFF, test the control circuit for a short to ground or an open/high resistance. If the circuit tests normal, replace the X50A Fuse Block - Under-bonnet.
9. If all circuits test normal, replace the inoperative headlamp.

Repair Instructions

Perform the Diagnostic Repair Verification

- Instrument Cluster Replacement
- Headlamp Replacement : Volt → Ampera
- Headlamp Bulb Replacement
- Indicator Multifunction Switch Replacement
- Accessory Wiring Junction Block Replacement
- Control Module References for BCM replacement, programming and setup

&#169© Copyright Chevrolet. All rights reserved

Interior Backlighting Malfunction

Diagnostic Instructions

- Perform the Diagnostic System Check - Vehicle prior to using this diagnostic procedure.
- Review Strategy Based Diagnosis for an overview of the diagnostic approach.
- Diagnostic Procedure Instructions provides an overview of each diagnostic category.

Diagnostic Fault Information

Circuit	Short to Ground	Open/High Resistance	Short to Voltage	Signal Performance
F5DR Fuse B+	B270A 01	B270A 01	--	--
Instrument Panel Dimmer Switch B+ Reference	B1395 03, B3600 03	B3600 03	1	B1395 07, 1
Instrument Panel Dimmer Switch Signal	B3600 03	B3600 03	B3600 07, 1	-
LED Backlight Dimming Control Terminal 8 X2	B2610 02	B2610 04, 1	B2610 01, 1	-
LED Backlight Dimming Control Terminal 9 X7	B2610 02	B2610 04, 1	B2610 01, 1	-
Garage Door Opener Switch Amber LED Control	B2625 02	2	2	--
Vehicle ON/OFF Switch Dimming Control	3	3	3	--
Instrument Panel Dimmer Switch Low Reference	1	1	1	--
Charge Port Door Open Request Switch Ground	--	2	--	--
Dome/Reading Lamps - Front Ground	--	2	--	--
Driver Information Centre Switch Ground	--	2	--	--
Garage Door Opener Switch Ground	--	2	--	--
Multifunction Switch - Overhead Console Ground	--	2	--	--
Outside Wing Mirror Switch Ground	--	2	--	--
Hand Brake Control Switch Ground	--	2	--	--
Radio/HVAC Controls Ground	--	2	--	--
Refuel Request Switch Ground	--	2	--	--
Steering Wheel Controls Switch - Left Ground	--	2	--	--
Steering Wheel Controls Switch - Right Ground	--	2	--	--

Vehicle ON/OFF Switch Ground	--	3	--	--
1. Dimmer Switch Malfunction 2. Interior Backlighting Malfunction 3. Vehicle ON/OFF Switch Backlighting Malfunction				

Circuit/System Description

The instrument panel dimmer switch is used to increase and decrease the brightness of the interior backlighting components. The instrument panel dimmer switch provides a voltage signal to the body control module (BCM) that will increase as the brightness of the lights are increased and decrease as the brightness of the lights are decreased. The BCM provides a low reference, signal, and B+ voltage reference circuits to the instrument panel dimmer switch. When the instrument panel dimmer switch is placed in the desired position, the dimmed voltage setting is applied from the instrument panel dimmer switch through the instrument panel dimmer switch signal circuit to the BCM. The BCM interprets the signal and applies a pulse width modulated (PWM) voltage through the light emitting diode (LED) dimming control circuits illuminating the interior backlighting to the requested level of brightness.

Diagnostic Aids

The instrument panel dimmer switch B+ reference circuit is a low current circuit that will not illuminate a test lamp.

Reference Information

Schematic Reference

- Interior Lights Dimming Schematics
- Body Control System Schematics

Connector End View Reference

Component Connector End Views

Description and Operation

Interior Lighting Systems Description and Operation

Electrical Information Reference

- Circuit Testing
- Connector Repairs

- Testing for Intermittent Conditions and Poor Connections
- Wiring Repairs

Scan Tool Reference

Control Module References for scan tool information

Circuit/System Verification

1. Vehicle in Service Mode, sidelights ON, observe the scan tool LED Backlight Dimming Command parameter while operating the dimmer switch from high to low. The reading should change from a high percentage to a low percentage as the switch is activated.
   If the reading does not change, refer to Dimmer Switch Malfunction.
2. Observe the function of the backlighting components while commanding the LED Backlight Dimming ON and OFF with a scan tool. The backlighting components should turn ON and OFF while changing between the commanded states.
   If the backlighting components do not turn ON and OFF, refer to Interior Backlighting Malfunction.
3. Observe the vehicle ON/OFF switch while adjusting the backlighting from low to high with the dimmer switch. The vehicle ON/OFF switch backlighting should change from low to high as the dimmer switch is operated.
   If the vehicle ON/OFF switch backlighting does not change from low to high as the dimmer switch is operated or is always OFF, refer to Vehicle ON/OFF Switch Backlighting Malfunction.

Circuit/System Testing

Dimmer Switch Malfunction

1. Vehicle OFF, disconnect the harness connector at the S16 Driver Information Centre Switch.
2. Vehicle in Service Mode, verify that a test lamp illuminates between B+ and the low reference circuit terminal 12.
   If the test lamp does not illuminate, test the low reference circuit for a short to voltage or an open/high resistance.
3. Test for B+ between the B+ reference circuit terminal 11 and ground.
   If less than the specified range, test the B+ reference circuit for a short to ground or an open/high resistance. If the circuit tests normal, replace the K9 Body Control Module.
4. Verify that a test lamp does not illuminate between the B+ reference circuit terminal 11 and ground.
   If the test lamp illuminates, test the B+ reference circuit for a short to voltage. If the circuit tests normal, replace the K9 Body Control Module.
5. Verify the scan tool LED Backlight Dimming Command parameter is greater than 40%.
   If less than the specified range, test the signal circuit terminal 10 for a short to voltage. If the circuit tests normal, replace the K9 Body Control Module.
6. Vehicle OFF, install a 3 A fused jumper wire between the B+ reference circuit terminal 11 and the signal circuit terminal 10.
7. Vehicle in Service Mode, verify the scan tool LED Backlight Dimming Command parameter is less than 40%.
   If greater than the specified range, test the signal circuit terminal 10 for a short to ground or an open/high resistance. If the circuit tests normal, replace the K9 Body Control Module.
8. If all circuits test normal, replace the S16 Driver Information Centre Switch.

Interior Backlighting Malfunction

Note: Each component with backlighting may need to be disconnected to isolate a short to voltage or short to ground. Use the schematics to identify the following:

- Backlighting components the vehicle is equipped with
- Each components control and ground circuit terminals
- Component locations on the backlighting control circuit

1. Vehicle OFF, disconnect the harness connector at any component with inoperative backlighting.
2. Vehicle OFF, scan tool disconnected, all doors closed, all accessories OFF, and wait 2 minutes. Test for less than 10 Ω between the appropriate ground circuit terminal listed below and ground:
   - A20 Radio/HVAC Controls - terminal 17
   - S16 Driver Information Centre Switch - terminal 4
   - E37F Dome/Reading Lamps - Front - terminal 6
   - S25 Garage Door Opener - terminal 3
   - S48B Multifunction Switch - Overhead Console amber LED - terminal 6
   - S70R Steering Wheel Controls Switch - Right - terminal 5
   - S70L Steering Wheel Controls Switch - Left - terminal 7
   - S91 Hand Brake Control Switch - terminal 8
   - S48B Multifunction Switch - Overhead Console - terminal 2
   - S52 Outside Wing Mirror Switch - terminal 11
   - S113 Charge Port Door Open Request Switch - terminal 4
   - S117 Refuel Request Switch - terminal 4

   If greater than the specified range, test the ground circuit for an open/high resistance.
3. Connect a test lamp between the appropriate control circuit terminal listed below and ground:
   - A20 Radio/HVAC Controls - terminal 18
   - S16 Driver Information Centre Switch - terminal 3
   - E37F Dome/Reading Lamps - Front - terminal 3
   - S25 Garage Door Opener - terminal 2
   - S48B Multifunction Switch - Overhead Console amber LED - terminal 3
   - S70L Steering Wheel Controls Switch - Left - terminal 6
   - S70R Steering Wheel Controls Switch - Right - terminal 4
   - S91 Hand Brake Control Switch - terminal 6
   - S48B Multifunction Switch - Overhead Console - terminal 1

- S52 Outside Wing Mirror Switch - terminal 1
- S113 Charge Port Door Open Request Switch - terminal 5
- S117 Refuel Request Switch - terminal 5

4. Vehicle in Service Mode, command the LED Backlight Dimming ON and OFF with a scan tool. The test lamp should turn ON and OFF when changing between the commanded states.
   If the test lamp is always OFF, test the control circuit for a short to ground or an open/high resistance. If the circuit tests normal, replace the K9 Body Control Module.
   If the test lamp is always ON, test the control circuit for a short to voltage. If the circuit tests normal, replace the K9 Body Control Module.
5. If all circuits test normal, replace the component with inoperative backlighting.

Vehicle ON/OFF Switch Backlighting Malfunction

1. Vehicle OFF, disconnect the harness connector at the S83 Vehicle On/Off Switch.
2. Vehicle OFF, scan tool disconnected, all doors closed, all accessories OFF, and wait 2 minutes. Test for less than 5 Ω between the ground circuit terminal 4 and ground.
   If greater than the specified range, test the ground circuit for an open/high resistance.
3. Connect a test lamp between the control circuit terminal 8 and ground.
4. Vehicle in Service Mode, sidelights ON, activate the dimmer switch from low to high. The test lamp intensity should change from low to high as the dimmer switch is activated.
   If the test lamp is always ON full intensity, test the control circuit for a short to voltage. If the circuit tests normal, replace the K9 Body Control Module.
   If the test lamp is always OFF, test the control circuit for a short to ground or open/high resistance. If the circuit tests normal, replace the K9 Body Control Module.
5. If all circuits test normal, replace the S83 Vehicle On/Off Switch.

Repair Instructions

Perform the Diagnostic Repair Verification after completing the diagnostic procedure.

- Driver Information Display and Multifunction Switch Replacement
- Outside Remote Control Wing Mirror Switch Replacement
- Radio Control Assembly Replacement
- Radio and Telephone Control Switch Replacement
- Accessory Switch Replacement
- Garage Door Opener Transmitter Pushbutton Replacement
- Dome and Reading Lamp Replacement
- Hand Brake Switch Replacement
- Fuel Tank Filler Door Lock Release Switch Replacement
- Charger Door Release Switch Replacement
- Control Module References for BCM replacement, programming and setup

&#169© Copyright Chevrolet. All rights reserved

Lights On Indicator Malfunction

Diagnostic Instructions

- Perform the Diagnostic System Check - Vehicle prior to using this diagnostic procedure.
- Review Strategy Based Diagnosis for an overview of the diagnostic approach.
- Diagnostic Procedure Instructions provides an overview of each diagnostic category.

Circuit/System Description

With the indicator/multifunction switch in the HEADLAMP or SIDELIGHT position, the appropriate indicator/multifunction switch signal circuit is grounded through the headlight switch. The body control module (BCM) then sends a serial data message to the instrument cluster requesting the instrument cluster to illuminate the lights on indicator. With the indicator/multifunction switch in the MAIN BEAM or FLASH-TO-PASS position the appropriate indicator/multifunction switch signal circuit is grounded through the indicator/multifunction switch. The BCM then sends a serial data message to the instrument cluster requesting the instrument cluster to illuminate the main beam indicator. The BCM will also request the instrument cluster to turn on the LIGHTS ON INDICATOR located in the driver information centre anytime the headlamps are ON and the ignition is OFF or the driver door is opened.

Diagnostic Aids

This diagnostic procedure assumes that the headlamps operate as described in Exterior Lighting Systems Description and Operation .

Reference Information

Schematic Reference

- Instrument Cluster Schematics
- Exterior Lamps Schematics

Connector End View Reference

Component Connector End Views

Description and Operation

Exterior Lighting Systems Description and Operation

Electrical Information Reference

- Circuit Testing
- Connector Repairs
- Testing for Intermittent Conditions and Poor Connections
- Wiring Repairs

Scan Tool Reference

Control Module References for scan tool information

Circuit/System Testing

Lights On Indicator Malfunction

Vehicle in Service Mode, command the All Indicators test ON and OFF with the scan tool, verify that the lights on indicator changes between turn ON and OFF.

If the lights on indicator does not illuminate during the test or remains illuminated at all times, replace the P16 Instrument Cluster.
If the lights on indicator illuminates during the test, replace the K9 Body Control Module.

Main Beam Indicator Malfunction

Vehicle in Service Mode, command the All Indicators test ON and OFF with the scan tool, verify that the main beam indicator changes between turn ON and OFF.

If the main beam indicator does not illuminate during the test or remains illuminated at all times, replace the P16 Instrument Cluster.
If the main beam indicator illuminates during the test, replace the K9 Body Control Module.

Repair Instructions

Perform the Diagnostic Repair Verification after completing the diagnostic procedure.

Control Module References for BCM or instrument cluster replacement, programming and setup

&#169© Copyright Chevrolet. All rights reserved

Sidelight, Number Plate, and/or Tail Lamps Malfunction

Diagnostic Instructions

- Perform the Diagnostic System Check - Vehicle prior to using this diagnostic procedure.
- Review Strategy Based Diagnosis for an overview of the diagnostic approach.
- Diagnostic Procedure Instructions provides an overview of each diagnostic category.

Diagnostic Fault Information

Circuit	Short to Ground	Open/High Resistance	Short to Voltage	Signal Performance
F6DR Fuse B+	B3867 01, B3867 04, B3949 01, B3949 04	B3867 01, B3867 04, B3949 01, B3949 04	--	--
Indicator/Multifunction Switch Sidelights ON Signal	2	B257A 00	2	--
Number Plate Lamp Control	B3883 02	B3883 01, B3883 04	B3883 01	--
Sidelights Control - Left Front	B2585 02	B2585 01, B2585 04	B2585 01, B2585 04	-
Sidelights Control - Right Front	B3867 02	B3867 01, B3867 04,	B3867 01, B3867 04,	-
Sidelights Control - Left Rear	1	1	1	--
Sidelights Control - Right Rear	1	1	1	--
Number Plate Lamp Ground - Right	--	1	--	--
Number Plate Lamp Ground - Left	--	1	--	--
Sidelight Ground - Left Front	-	B2585 01, B2585 04, B3948 01, B3948 04	--	--
Sidelight Ground - Right Front	-	B3867 01, B3867 04, B3949 01, B3949 04	--	--
Tail Lamp Ground - Left	--	1	--	--
Tail Lamp Ground - Right	--	1	--	--

Indicator/Multifunction Switch Ground	--	2	--	--
1. Sidelight, Number Plate, and/or Tail Lamps Malfunction 2. Sidelight Switch Malfunction				

Circuit/System Description

When the indicator/multifunction switch is placed in the HEADLAMP or SIDELIGHT position, ground is applied to the sidelights ON signal circuit to the body control module (BCM). The BCM responds by applying voltage to the sidelights, tail lamps, and number plate lamps control circuits illuminating the sidelight, tail, and number plate lamps.

Reference Information

Schematic Reference

- Exterior Lamps Schematics
- Body Control System Schematics

Connector End View Reference

Component Connector End Views

Description and Operation

Exterior Lighting Systems Description and Operation

Electrical Information Reference

- Circuit Testing
- Connector Repairs
- Testing for Intermittent Conditions and Poor Connections
- Wiring Repairs

Scan Tool Reference

Control Module References for scan tool information

Circuit/System Verification

1. Vehicle in Service Mode, observe the scan tool Sidelights Switch parameter while turning the indicator/multifunction switch between the OFF and SIDELIGHT positions.

The parameter should change between Active and Inactive.
If the parameter does not change between the commanded states, refer to Sidelight Switch Malfunction.

2. Command the Left Front Sidelight ON and OFF with a scan tool. The left front sidelight should turn ON and OFF when changing between the commanded states.
   If the left front sidelight does not turn ON and OFF when commanded, refer to Sidelights Malfunction.
3. Command the Left Rear Sidelight ON and OFF with a scan tool. The left rear sidelight should turn ON and OFF when changing between the commanded states.
   If the left rear sidelight does not turn ON and OFF when commanded, refer to Sidelights Malfunction.
4. Command the Right Front Sidelight ON and OFF with a scan tool. The right front sidelight should turn ON and OFF when changing between the commanded states.
   If the right front sidelight does not turn ON and OFF when commanded, refer to Sidelights Malfunction.
5. Command the Right Rear Sidelight ON and OFF with a scan tool. The right rear sidelight should turn ON and OFF when changing between the commanded states.
   If the right rear sidelight does not turn ON and OFF when commanded, refer to Sidelights Malfunction.
6. Command the Number Plate Lamps ON and OFF with a scan tool. The number plate lamps should turn ON and OFF when changing between the commanded states.
   If the number plate lamps do not turn ON and OFF when commanded, refer to Number Plate Lamps Malfunction.

Circuit/System Testing

Sidelight Switch Malfunction

1. Vehicle OFF, disconnect the harness connector at the S78 Indicator/Multifunction Switch.
2. Vehicle OFF, all doors closed, all accessories OFF, and wait 2 minutes. Test for less than 10 Ω between the ground circuit terminal 6 and ground.
   If greater then the specified range, test the ground circuit for an open/high resistance.
3. Vehicle in Service Mode, verify the scan tool Sidelights Switch parameter is Inactive.
   If not the specified value, test the signal circuit terminal 7 for a short to ground. If the circuit tests normal, replace the K9 Body Control Module.
4. Install a 3 A fused jumper wire between the signal circuit terminal 7 and ground. Verify the scan tool Sidelights Switch parameter is Active.
   If not the specified value, test the signal circuit for a short to voltage or an open/high resistance. If the circuit tests normal, replace the K9 Body Control Module.
5. If all circuits test normal, replace the S78 Indicator/Multifunction Switch.

Sidelights Malfunction

1. Vehicle OFF, disconnect the harness connector at the inoperative sidelight.
2. Vehicle OFF, exterior lamps OFF, test for less than 5 Ω between the appropriate ground circuit terminal listed below and ground:
   - E4N Sidelight/Indicator Lamp - Left - terminal 1
   - E4P Sidelight/Indicator Lamp - Right - terminal 1
   - E42L Tail Lamp Assembly - Left - terminal 4
   - E42R Tail Lamp Assembly - Right - terminal 4

   If greater than the specified range, test the ground circuit for an open/high resistance.
3. Connect a test lamp between the appropriate control circuit terminal listed below and ground:
   - E4N Sidelight/Indicator Lamp - Left - terminal 2

- E4P Sidelight/Indicator Lamp - Right - terminal 2
- E42L Tail Lamp Assembly - Left - terminal 2
- E42R Tail Lamp Assembly - Right - terminal 2

4. Vehicle in Service Mode, command the appropriate Sidelight ON and OFF with a scan tool. The test lamp should turn ON and OFF when changing between the commanded states.
   If the test lamp is always ON, test the control circuit for a short to voltage. If the circuit tests normal, replace the K9 Body Control Module.
   If the test lamp is always OFF, test the control circuit for a short to ground or an open/high resistance. If the circuit tests normal, replace the K9 Body Control Module.
5. If all circuits test normal, replace the inoperative park lamp.

Number Plate Lamps Malfunction

1. Vehicle OFF, disconnect the harness connector at the E7L Number Plate Lamp - Left and E7R Number Plate Lamp - Right.
2. Vehicle OFF, exterior lamps OFF, test for less than 5 Ω between each ground circuit terminal 2 and ground.
   If greater than the specified range, test the ground circuit for an open/high resistance.
3. Connect a test lamp between the E7L Number Plate Lamp - Left control circuit terminal 1 and ground.
4. Vehicle in Service Mode, command the Number Plate Lamps ON and OFF with a scan tool. The test lamp should turn ON and OFF when changing between the commanded states.
   If the test lamp is always ON, test the control circuit for a short to voltage. If the circuit tests normal, replace the K9 Body Control Module.
   If the test lamp is always OFF, test the control circuit for a short to ground or an open/high resistance. If the circuit tests normal, replace the K9 Body Control Module.
5. Vehicle OFF, connect a test lamp between the E7R Number Plate Lamp - Right control circuit terminal 1 and ground.
6. Vehicle in Service Mode, command the Number Plate Lamps ON and OFF with a scan tool. The test lamp should turn ON and OFF when changing between the commanded states.
   If the test lamp is always OFF, test the control circuit for a short to ground or an open/high resistance. If the circuit tests normal, replace the K9 Body Control Module.
7. If all circuits test normal, replace the inoperative number plate lamp bulb.

Repair Instructions

Perform the Diagnostic Repair Verification after completing the diagnostic procedure.

- Rear Number Plate Lamp Replacement
- Tail Lamp Replacement
- Indicator Multifunction Switch Replacement
- Tail Lamp Replacement
- Control Module References for BCM replacement, programming and setup

&#169© Copyright Chevrolet. All rights reserved

Reading Lamps Malfunction

Diagnostic Instructions

- Perform the Diagnostic System Check - Vehicle prior to using this diagnostic procedure.
- Review Strategy Based Diagnosis for an overview of the diagnostic approach.
- Diagnostic Procedure Instructions provides an overview of each diagnostic category.

Diagnostic Fault Information

Circuit	Short to Ground	Open/High Resistance	Short to Voltage	Signal Performance
Reading Lamps B+	1, 2	1	--	--
Reading Lamps Ground Terminal 6	--	1	--	--
1. Reading Lamps Always OFF 2. Sun Visor Lamps Always OFF				

Circuit/System Description

The body control module (BCM) supplies the dome/reading lamps and sun visor lamps with battery voltage. When switching on the following components the concerning lamps will illuminate:

- Dome/reading lamps - row
- Sun Visor - left Front
- Sun Visor - right Front

Reference Information

Schematic Reference

Interior Lights Schematics

Connector End View Reference

Component Connector End Views

Description and Operation

Interior Lighting Systems Description and Operation

Electrical Information Reference

- Circuit Testing
- Connector Repairs
- Testing for Intermittent Conditions and Poor Connections
- Wiring Repairs

Scan Tool Reference

Control Module References for scan tool information

Circuit/System Verification

Vehicle in Service Mode, switch the dome/reading lamps or dome/reading lamps - row ON and OFF while observing the lamp. The concerning reading lamp should illuminate when switched ON.

Circuit/System Testing

Reading Lamps Circuit Malfunction

1. Vehicle OFF, disconnect the harness connector at the E37F Dome/Reading Lamps - Front.
2. Test for less than 5 Ω between the ground circuit terminal 6 and ground.
   If greater than the specified range, test the ground circuit for an open/high resistance.
3. Vehicle in Service Mode and dome/reading lamps OFF, test for greater than 11 V between the circuit terminal 1 and ground circuit terminal 6.
4. Vehicle in Service Mode and dome/reading lamps OFF, test for greater than 11 V between the circuit terminal 2 and ground circuit terminal 6.
5. Vehicle in Service Mode and dome/reading lamps OFF, test for greater than 11 V between the circuit terminal 3 and ground circuit terminal 6.
6. Vehicle in Service Mode and dome/reading lamps OFF, test for greater than 11 V between the circuit terminal 4 and ground circuit terminal 6.
   If less than the specified range, test the circuits for a short to ground or an open/high resistance. If the circuits tests normal, replace the K9 Body Control Module.
7. If all circuits test normal, test or replace the E37F Dome/Reading Lamps - Front.

Repair Instructions

Perform the Diagnostic Repair Verification after completing the diagnostic procedure.

- Reading Lamp Replacement
- Dome and Reading Lamp Replacement
- Control Module References for BCM replacement, programming and setup

&#169© Copyright Chevrolet. All rights reserved

Brake Lamps Malfunction

Diagnostic Instructions

- Perform the Diagnostic System Check - Vehicle prior to using this diagnostic procedure.
- Review Strategy Based Diagnosis for an overview of the diagnostic approach.
- Diagnostic Procedure Instructions provides an overview of each diagnostic category.

Diagnostic Fault Information

Circuit	Short to Ground	Open/High Resistance	Short to Voltage	Signal Performance
F10DL Fuse B+	C0890 03, B101E 43, B1395 03, B1517 07, U0121 00, U0128 00, U0422 71	C0890 03, B101E 43, B1395 03, B1517 07, U0121 00, U0128 00, U0422 71	--	--
Brake Pedal Position Sensor 5V Reference	C0277 06, C0890 03, U0422 71, C0561 71	C0277 06, U0422 71, C0561 71	C0277 07, C0890 07, U0422 71, C0561 71	-
Brake Pedal Position Sensor Signal	C0277 06, U0422 71, C0561 71	C0277 06, U0422 71, C0561 71	C0277 07, C0890 07, U0422 71, C0561 71	C0277 09
Centre High Mounted Brake Lamp Control	2	2	2	--
Brake/Indicator Lamp Control - Left	1	1	1	--
Brake/Indicator Lamp Control - Right	1	1	1	--
Brake Pedal Position Sensor Low Reference	-	C0277 06, U0422 71, C0561 71	1	--
Centre High Mounted Brake Lamp Ground	--	2	--	--
Tail/Brake Lamp Ground - Left	--	1	--	--
Tail/Brake Lamp Ground - Right	--	1	--	--

1. Brake Lamps Malfunction

2. Centre High Mounted Brake Lamp Malfunction

Circuit/System Description

The brake pedal position (BPP) sensor is used to sense the action of the driver application of the brake pedal. The BPP sensor provides an analogue voltage signal that will increase as the brake pedal is applied. The body control module (BCM) provides a low reference signal and a 5 V reference voltage to the BPP sensor. When the variable signal reaches a voltage threshold indicating the brakes have been applied, the BCM will apply battery voltage to the left and right brake lamp control circuits as well as the centre high mounted brake lamp control circuit illuminating the left and right brake lamps and the centre high mounted brake lamp.

Reference Information

Schematic Reference

- Exterior Lamps Schematics
- Body Control System Schematics

Connector End View Reference

Component Connector End Views

Description and Operation

Exterior Lighting Systems Description and Operation

Electrical Information Reference

- Circuit Testing
- Connector Repairs
- Testing for Intermittent Conditions and Poor Connections
- Wiring Repairs

Scan Tool Reference

Control Module References for scan tool information

Circuit/System Verification

1. Vehicle in Service Mode, observe the scan tool Brake Pedal Applied parameter while pressing and releasing the brake pedal. The parameter should change between Active and Inactive as the brake pedal is applied and released.
   If the parameter does not change between the commanded states, refer to the Brake Pedal Position Sensor Malfunction.
2. Command the Left Rear Indicator/Brake Lamp ON and OFF with a scan tool. The left brake lamp should turn ON and OFF when changing between the commanded states.
   If the left brake lamp does not turn ON and OFF when changing between the commanded states, refer to Brake Lamps Malfunction.
3. Command the Right Rear Indicator/Brake Lamp ON and OFF with a scan tool. The right brake lamp should turn ON and OFF when changing between the commanded states.
   If the right brake lamp does not turn ON and OFF when changing between the commanded states, refer to Brake Lamps Malfunction.
4. Command the Centre Brake Lamp ON and OFF with a scan tool. The centre high mounted brake lamp should turn ON and OFF when changing between the commanded states.
   If the centre high mount brake lamp does not turn ON and OFF when changing between the commanded states, refer to Centre High Mount Brake Lamp Malfunction.

Circuit/System Testing

Brake Pedal Position Sensor Malfunction

1. Vehicle OFF, disconnect the harness connector at the B22 Brake Pedal Position Sensor.
2. Vehicle in Service Mode, verify that a test lamp does not illuminate between the low reference circuit terminal C and ground.
   If the test lamp illuminates, test the low reference circuit for a short to voltage. If the circuit tests normal, replace the K9 Body Control Module.
3. If all circuits test normal, replace the B22 Brake Pedal Position Sensor.

Brake Lamps Malfunction

1. Vehicle OFF, disconnect the harness connector at the inoperative tail lamp assembly.
2. Vehicle OFF, exterior lamps OFF, test for less than 5 Ω between the ground circuit terminal 4 and ground.
   If greater than the specified range, test the ground circuit for an open/high resistance.
3. Connect a test lamp between the control circuit terminal 1 and ground.
4. Vehicle in Service Mode, command the appropriate Rear Indicator/Brake Lamp ON and OFF with a scan tool. The test lamp should turn ON and OFF when changing between the commanded states.
   If the test lamp is always ON, test the control circuit for a short to voltage. If the circuit tests normal, replace the K9 Body Control Module.
   If the test lamp is always OFF, test the control circuit for a short to ground or an open/high resistance. If the circuit tests normal, replace the K9 Body Control Module.
5. If all circuits test normal, replace the inoperative tail lamp assembly.

Centre High Mount Brake Lamp Malfunction

1. Vehicle OFF, disconnect the harness connector at the E6 Centre High Mounted Brake Lamp.
2. Vehicle OFF, exterior lamps OFF, test for less than 5 Ω between the ground circuit terminal 2 and ground.
   If greater than the specified range, test the ground circuit for an open/high resistance.

3. Connect a test lamp between the control circuit terminal 1 and ground.
4. Vehicle in Service Mode, command the Centre Brake Lamp ON and OFF with a scan tool. The test lamp should turn ON and OFF when changing between the commanded states.
   If the test lamp is always ON, test the control circuit for a short to voltage. If the circuit tests normal, replace the K9 Body Control Module.
   If the test lamp is always OFF, test the control circuit for a short to ground or an open/high resistance. If the circuit tests normal, replace the K9 Body Control Module.
5. If all circuits test normal, replace the E6 Centre High Mounted Brake Lamp.

Repair Instructions

Perform the Diagnostic Repair Verification after completing the diagnostic procedure.

- Tail Lamp Replacement
- High Mount Brake Lamp Replacement
- Control Module References for BCM replacement, programming and setup

&#169© Copyright Chevrolet. All rights reserved

Sun Visor Illumination Malfunction

Diagnostic Instructions

- Perform the Diagnostic System Check - Vehicle prior to using this diagnostic procedure.
- Review Strategy Based Diagnosis for an overview of the diagnostic approach.
- Diagnostic Procedure Instructions provides an overview of each diagnostic category.

Diagnostic Fault Information

Circuit	Short to Ground	Open/High Resistance	Short to Voltage	Signal Performance
Sun Visor Lamps B+	1, 2	2	--	--
Sun Visor Lamps Ground	--	2	--	--
1. Reading Lamps Always OFF 2. Sun Visor Lamps Always OFF				

Circuit/System Description

The body control module (BCM) supplies the dome/reading lamps and sun visor lamps with battery voltage. When switching on the following components the concerning lamps will illuminate:

- Dome/reading lamps
- Sun Visor - left Front
- Sun Visor - right Front

Reference Information

Schematic Reference

Interior Lights Schematics

Connector End View Reference

Component Connector End Views

Description and Operation

Interior Lighting Systems Description and Operation

Electrical Information Reference

- Circuit Testing
- Connector Repairs
- Testing for Intermittent Conditions and Poor Connections
- Wiring Repairs

Scan Tool Reference

Control Module References for scan tool information

Circuit/System Verification

Vehicle in Service Mode, observe the lamp of the sun visor - left front/sun visor - right front while opening and closing. The lamp should illuminate when opened.

Circuit/System Testing

1. Vehicle OFF, disconnect the harness connector at the appropriate inoperative sun visor.
2. Test for less than 5 Ω between the ground circuit terminal B and ground.
   If greater than the specified range, test the ground circuit for an open/high resistance.
3. Vehicle in Service Mode, test for greater than 11 V between voltage circuit terminal A and the ground circuit terminal B.
   If less than the specified range, test the circuit for a short to ground or an open/high resistance. If the circuit tests normal, replace the K9 Body Control Module.
4. If all circuits test normal, test or replace the inoperative sun visor.

Repair Instructions

Perform the Diagnostic Repair Verification after completing the diagnostic procedure.

- Sun visor Replacement
- Sun visor Support Replacement
- Control Module References for BCM replacement, programming and setup

&#169© Copyright Chevrolet. All rights reserved

Indicator Lamps and/or Indicators Malfunction

Diagnostic Instructions

- Perform the Diagnostic System Check - Vehicle prior to using this diagnostic procedure.
- Review Strategy Based Diagnosis for an overview of the diagnostic approach.
- Diagnostic Procedure Instructions provides an overview of each diagnostic category.

Diagnostic Fault Information

Circuit	Short to Ground	Open/High Resistance	Short to Voltage	Signal Performance
F6DR Fuse B+	B3867 01, B3867 04, B3949 01, B3949 04	B3867 01, B3867 04, B3949 01, B3949 04	--	--
F8DR Fuse B+	B3948 01, B3948 04	B3948 01, B3948 04	--	--
Indicator Switch Signal - Left	2	2	2	--
Tail Lamp Outage Detection Signal - Left	3	3	3	--
Tail Lamp Outage Detection Signal - Right	3	3	3	--
Indicator Switch Signal - Right	2	2	2	--
Brake/Indicator Control - Left Rear	B3950 02	B3950 01, B3950 04	1	--
Brake/Indicator Control - Right Rear	B3951 02	B3951 01, B3951 04	1	--
Indicator Control - Left Front	B3948 02	B3948 01, B3948 04	1	--
Indicator Control - Right Front	B3949 02	B3949 01, B3949 04	1	--
Sidelight/Indicator Lamp Ground - Left Front	-	B2585 01, B2585 04, B3948 01, B3948 04	--	--
Sidelight/Indicator Lamp Ground - Right Front	-	B3867 01, B3867 04, B3949 01, B3949 04	--	--
Tail Lamp Ground - Left	--	1	--	--
Tail Lamp Ground - Right	--	1	--	--
Indicator/Multifunction Switch Ground	--	2	--	--

1. Indicator Lamps and/or Indicators Malfunction

2. Indicator/Multifunction Switch Malfunction

3. Tail Lamp Outage Detection Malfunction

Circuit/System Description

Ground is applied at all times to the indicator/multifunction switch. The indicator lamps may only be activated with the vehicle mode switch in the SERVICE MODE or ON positions. When the indicator/multifunction switch is placed in either the TURN RIGHT or TURN LEFT position, ground is applied to the body control module (BCM) through either the right turn or left indicator switch signal circuit. The BCM responds to the indicator switch input by applying a pulsating voltage to the front and rear indicator lamps through there respective control circuits. When a indicator request is received by the BCM, a serial data message is sent to the instrument panel cluster requesting the respective indicator indicator be pulsed ON and OFF.

Diagnostic Aids

The tail lamp outage detection circuits are low current B+ circuits that will not illuminate a test lamp.

Reference Information

Schematic Reference

- Exterior Lamps Schematics
- Body Control System Schematics

Connector End View Reference

Component Connector End Views

Description and Operation

Exterior Lighting Systems Description and Operation

Electrical Information Reference

- Circuit Testing
- Connector Repairs
- Testing for Intermittent Conditions and Poor Connections
- Wiring Repairs

Scan Tool Reference

Control Module References for scan tool information

Circuit/System Verification

1. Vehicle in Service Mode, observe the scan tool Right Indicator Switch and Left Indicator Switch parameters while cycling the indicator/multifunction switch between the right and left positions. The readings should change between Active and Inactive.
   If the parameters do not change between the selected states, refer to Indicator/Multifunction Switch Malfunction.
2. Command the Left Front Indicator Lamp ON and OFF with a scan tool. The left front indicator should turn ON and OFF when changing between the commanded states.
   If the left front indicator does not turn ON and OFF when changing between the commanded states, refer to Indicator Lamps Malfunction.
3. Command the Right Front Indicator Lamp ON and OFF with a scan tool. The right front indicator should turn ON and OFF when changing between the commanded states.
   If the right front indicator does not turn ON and OFF when changing between the commanded states, refer to Indicator Lamps Malfunction.
4. Command the Left Rear Indicator/Brake Lamp ON and OFF with a scan tool. The left rear indicator should turn ON and OFF when changing between the commanded states.
   If the left rear indicator does not turn ON and OFF when changing between the commanded states, refer to Indicator Lamps Malfunction.
5. Command the Right Rear Indicator/Brake Lamp ON and OFF with a scan tool. The right rear indicator should turn ON and OFF when changing between the commanded states.
   If the right rear indicator does not turn ON and OFF when changing between the commanded states, refer to Indicator Lamps Malfunction.
6. Observe the left and right indicator lamps and indicator indicators on the instrument panel cluster while activating the left and right indicators. The left and right indicator lamps and indicators should illuminate and flash at a normal rate when turned ON.
   If the left and right indicator lamps and indicators illuminate but flash in a rapid manner, refer to Tail Lamp Outage Detection Malfunction.
7. Command the Instrument Cluster Gauge Sweep Test ON and OFF with a scan tool. The left and right indicator indicators should turn ON and OFF when changing between the commanded states.
   If the left and right indicator indicators do not turn ON and OFF when commanded, refer to Indicator Indicators Malfunction.

Circuit/System Testing

Indicator/Multifunction Switch Malfunction

1. Vehicle OFF, disconnect the harness connector at the S78 Indicator/Multifunction Switch.
2. Vehicle OFF, scan tool disconnected, all doors closed, all accessories OFF, and wait 2 minutes. Test for less than 10 Ω between the ground circuit terminal 6 and ground.
   If greater than the specified range, test the ground circuit for an open/high resistance.
3. Vehicle in Service Mode, verify the scan tool Left Indicator Switch parameter is Inactive.
   If not the specified value, test the signal circuit terminal 4 for a short to ground. If the circuit tests normal, replace the K9 Body Control Module.
4. Verify the scan tool Right Indicator Switch parameter is Inactive.
   If not the specified value, test the signal circuit terminal 5 for a short to ground. If the circuit tests normal, replace the K9 Body Control Module.
5. Install a 3 A fused jumper wire between the signal circuit terminal 4 and ground. Verify the scan tool Left Indicator Switch parameter is Active.
   If not the specified value, test the signal circuit for a short to voltage or an open/high resistance. If the circuit tests normal, replace the K9 Body Control Module.
6. Install a 3 A fused jumper wire between the signal circuit terminal 5 and ground. Verify the scan tool Right Indicator Switch parameter is Active.
   If not the specified value, test the signal circuit for a short to voltage or an open/high resistance. If the circuit tests normal, replace the K9 Body Control Module.

7. If all circuits test normal, replace the S78 Indicator/Multifunction Switch.

Indicator Lamps Malfunction

1. Vehicle OFF, disconnect the harness connector at the inoperative indicator lamp.
2. Vehicle OFF, exterior lamps OFF, test for less than 5 Ω between the appropriate ground circuit terminal listed below and ground:
   - E4N Sidelight/Indicator Lamp - Left - terminal 1
   - E4Y Indicator Repeater Lamp - Left - terminal C
   - E4P Sidelight/Indicator Lamp - Right - terminal 1
   - E4Z Indicator Repeater Lamp - Right - terminal C
   - E42L Tail Lamp Assembly - Left - terminal 4
   - E42R Tail Lamp Assembly - Right - terminal 4

   If greater than the specified range, test the ground circuit for an open/high resistance.
3. Connect a test lamp between the appropriate control circuit terminal listed below and ground:
   - E4N Sidelight/Indicator Lamp - Left - terminal 3
   - E4Y Indicator Repeater Lamp - Left - terminal A
   - E4P Sidelight/Indicator Lamp - Right - terminal 3
   - E4Z Indicator Repeater Lamp - Right - terminal D
   - E42L Tail Lamp Assembly - Left - terminal 1
   - E42R Tail Lamp Assembly - Right - terminal 1
4. Vehicle in Service Mode, command the appropriate Indicator Lamp ON and OFF with a scan tool. The test lamp should turn ON and OFF when changing between the commanded states.
   If the test lamp is always ON, test the control circuit for a short to voltage. If the circuit tests normal, replace the K9 Body Control Module.
   If the test lamp is always OFF, test the control circuit for a short to ground or an open/high resistance. If the circuit tests normal, replace the K9 Body Control Module.
5. If all circuits test normal, replace the inoperative indicator lamp.

Tail Lamp Outage Detection Malfunction

1. Vehicle OFF, disconnect the harness connector at the inoperative tail lamp assembly.
2. Vehicle in Service Mode, test for B+ between the signal circuit terminal 3 and ground.
   If less than the specified value, test the signal circuit for a short to ground or an open/high resistance. If the circuit tests normal, replace the K9 Body Control Module.
3. Verify that a test lamp does not illuminate between the signal circuit terminal 3 and ground.
   If the test lamp illuminates, test the signal circuit for a short to voltage. If the circuit tests normal, replace the K9 Body Control Module.
4. If all circuits test normal, replace the inoperative tail lamp assembly.

Indicator Indicators Malfunction

Vehicle in Service Mode, with a scan tool perform the Instrument Cluster Gauge Sweep Test and observe the left and right indicator indicators.

If the left and right indicator indicators illuminate during the test, replace the K9 Body Control Module.
If the left and right indicator indicators do not illuminate during the test or remain illuminated at all times, replace the P16 Instrument Cluster.

Repair Instructions

Perform the Diagnostic Repair Verification after completing the diagnostic procedure.

- Indicator Multifunction Switch Replacement
- Front Indicator Lamp Replacement : Volt → Ampera
- Tail Lamp Replacement
- Control Module References for BCM or Instrument Cluster replacement replacement, programming and setup

&#169© Copyright Chevrolet. All rights reserved

Brake Pedal Position Sensor Calibration

Calibration Criteria

Note: Do not apply the brake pedal during the brake pedal position sensor calibration procedure. Any movement of the brake pedal during this procedure will cause the calibration procedure to fail. If this occurs, the brake pedal position sensor calibration must be repeated.

Brake pedal position sensor calibration must be performed after the brake pedal position sensor or body control module (BCM) have been serviced. The calibration procedure will set the brake pedal position sensor home value. This value is used by the BCM to determine the action of the driver applying the brake system and to provide this information to the vehicle subsystems via serial data.

Calibration Procedure

1. Apply the handbrake.
2. Place the transmission in the PARK position for automatic transmission or NEUTRAL position for manual gearbox.
3. Install a scan tool.
4. Clear all BCM DTCs before proceeding.
5. Navigate to the Configuration/Reset Functions menu of the BCM.
6. Select the Brake Pedal Position Sensor Learn procedure and follow the directions displayed on the screen.

© Copyright Chevrolet. All rights reserved

Brake Pedal Position Sensor Replacement

Removal Procedure

1. Disconnect the brake pedal position sensor electrical connector.

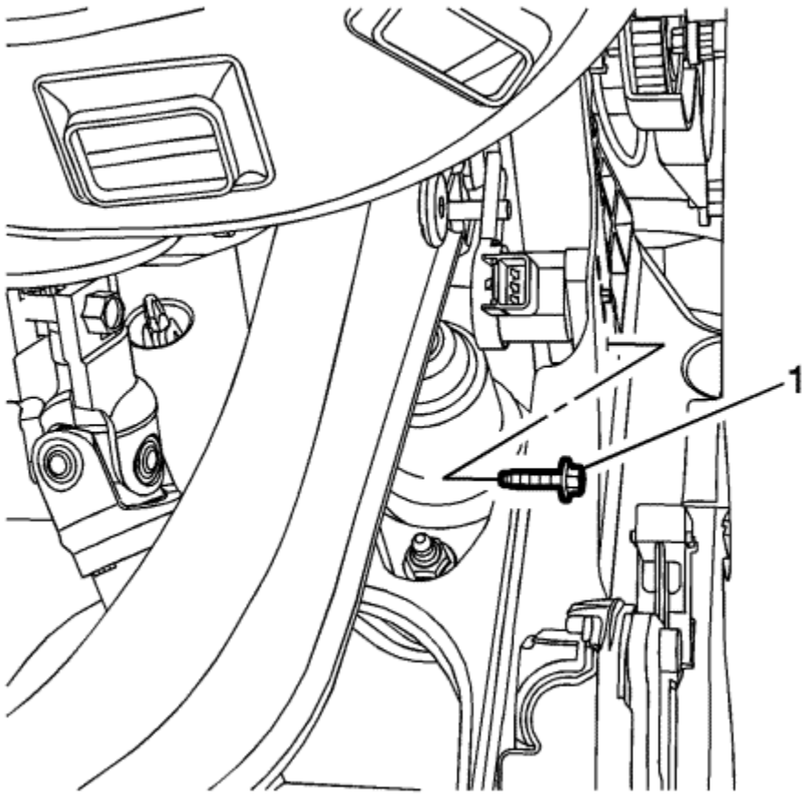

2. Remove the brake pedal position sensor bolt (1).

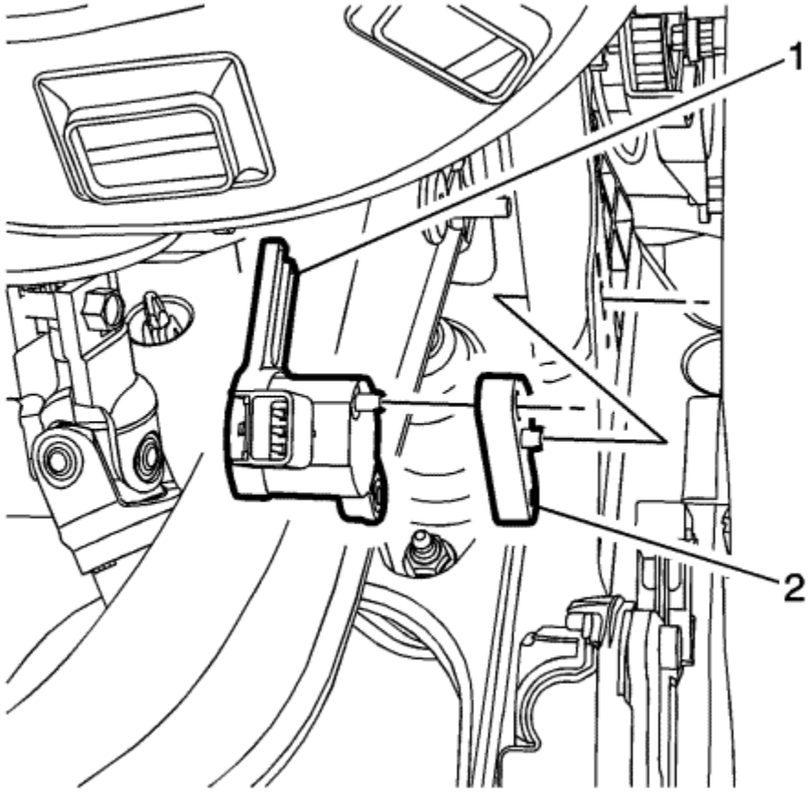

3. Remove the brake pedal position sensor (1) and spacer (2).

Installation Procedure

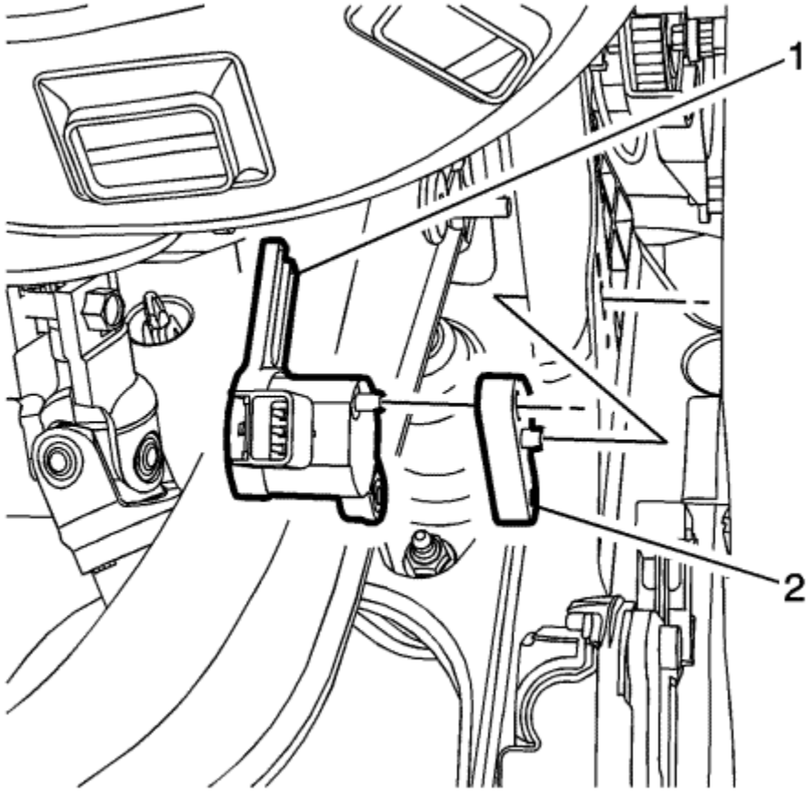

1. Align the locating pin on the brake pedal position sensor (1) to the hole on the spacer (2).
2. Align the locating pin on the brake pedal position sensor to the hole on the brake pedal assembly bracket.
3. Ensure the brake pedal position sensor fork is properly located on the brake pedal pin.

Caution: Refer to Fastener Caution in the Preface section.

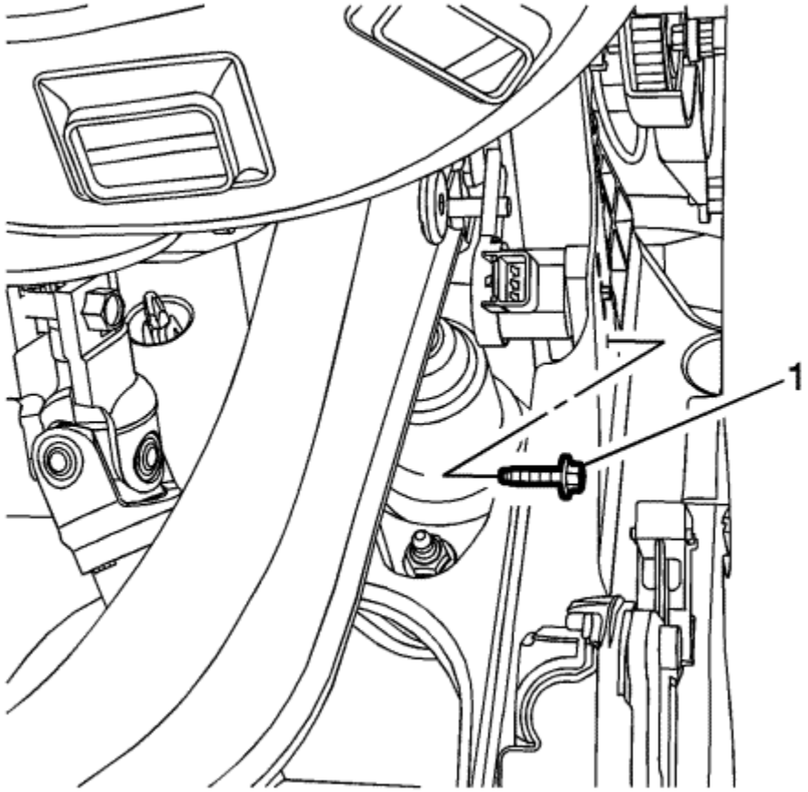

4. Install the brake pedal position sensor bolt (1) and tighten to **9 N·m (80 lb in)**.
5. Connect the brake pedal position sensor electrical connector.
6. Calibrate the brake pedal position sensor. Refer to Brake Pedal Position Sensor Calibration .

© Copyright Chevrolet. All rights reserved

Reading Lamp Replacement

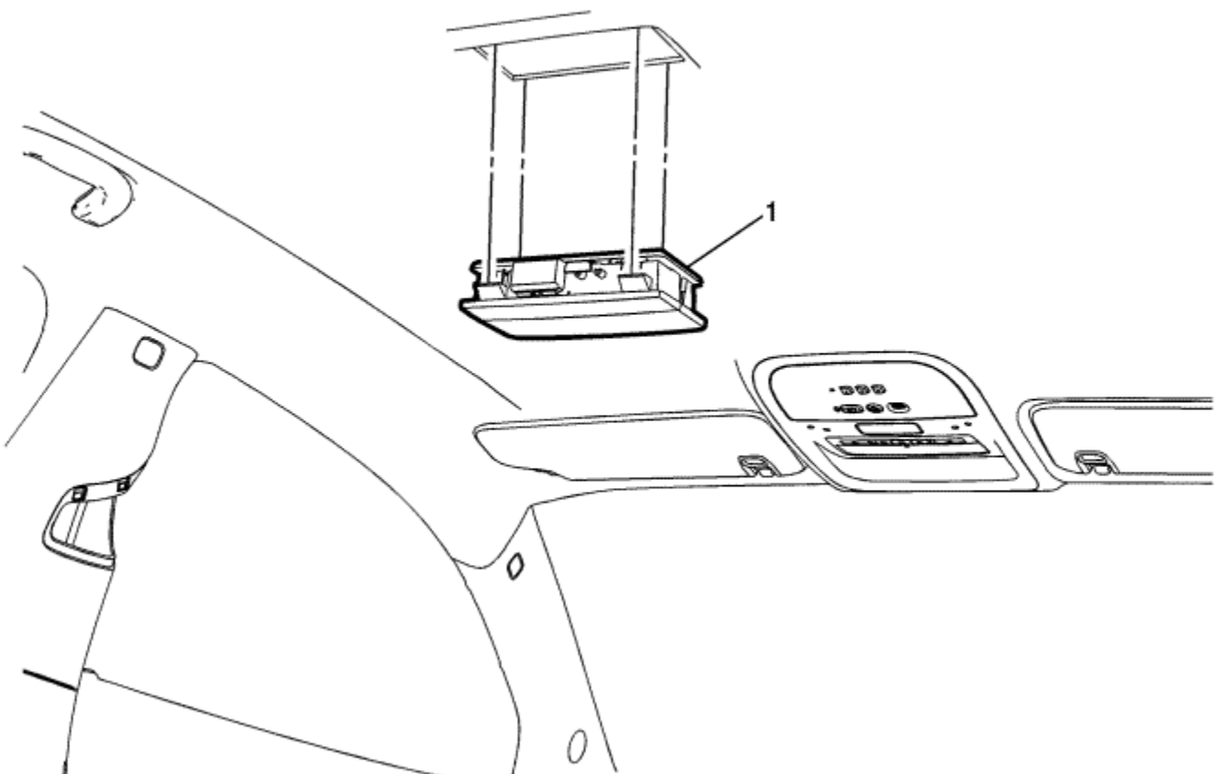

Callout	Component Name
1	Reading Lamp **Procedure** 1. Depress the front integral tabs using the appropriate tool to remove the reading lamp from the headlining trim panel.

	2. Disconnect the electrical connector.

© Copyright Chevrolet. All rights reserved

Dome and Reading Lamp Replacement

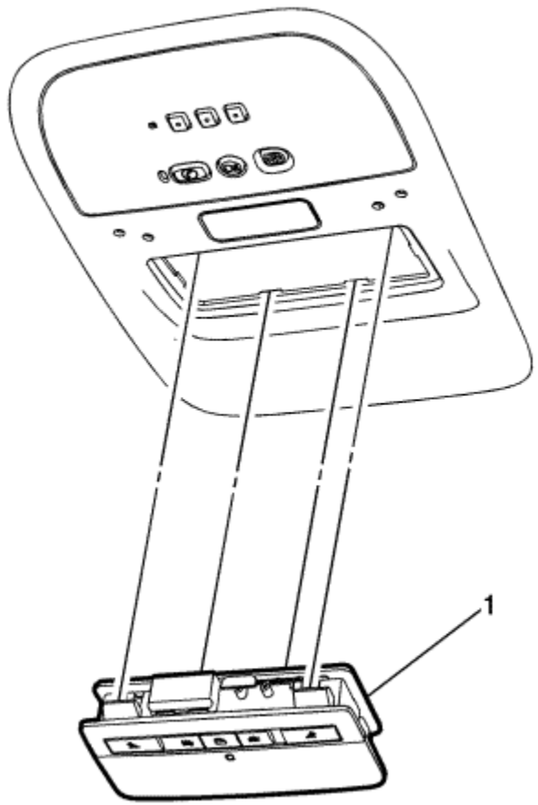

Callout	Component Name
Preliminary Procedure Remove the roof console. Refer to Roof Console Replacement .	
	Dome and Reading Lamp

1	**Procedure** 1. Depress the integral four tabs and use the appropriate tool to remove the dome and reading lamp from the roof console. 2. Disconnect the electrical connector.

© Copyright Chevrolet. All rights reserved

Interior and Reading Lamp Bulb Replacement

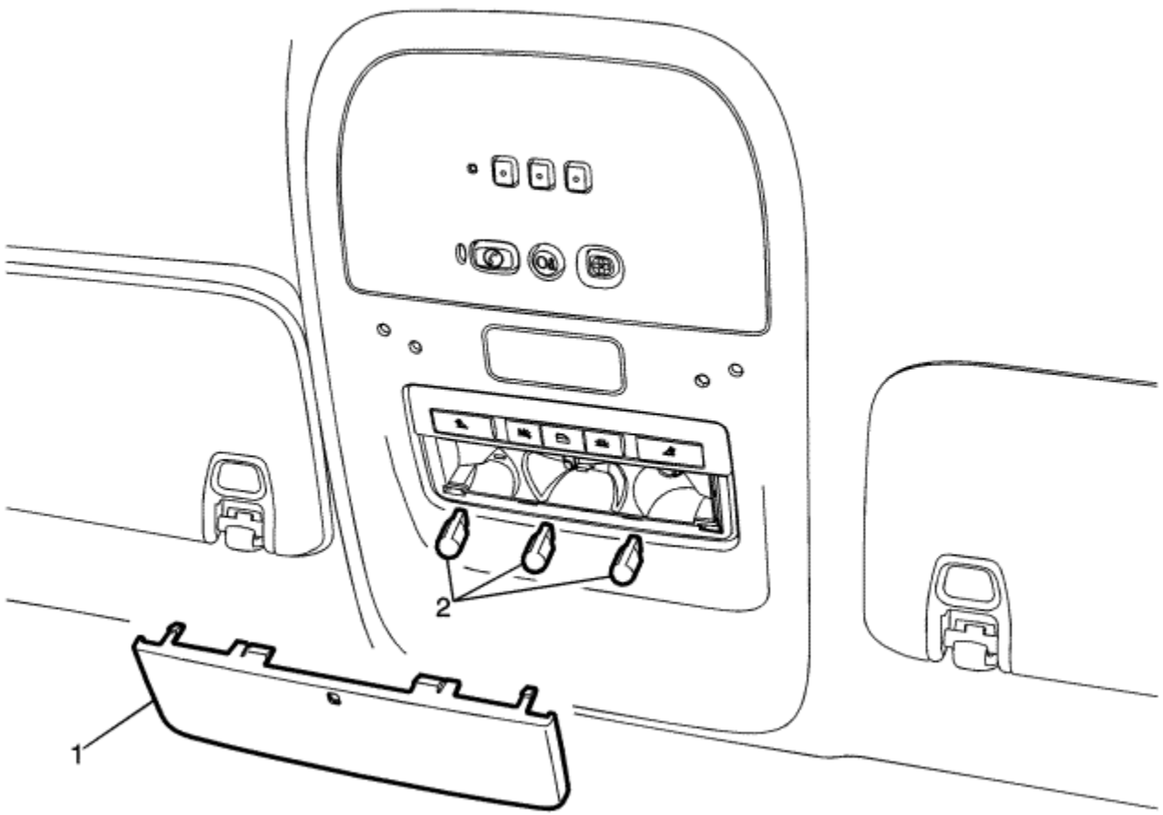

Callout	Component Name
1	Interior and Reading Lamp Lens **Procedure** Using the appropriate tool release the lens to gain access to the bulbs.

2	Dome and Reading Lamp Bulb (Qty: 3)

© Copyright Chevrolet. All rights reserved

Sun Visor Illuminated Mirror Lamp Bulb Replacement

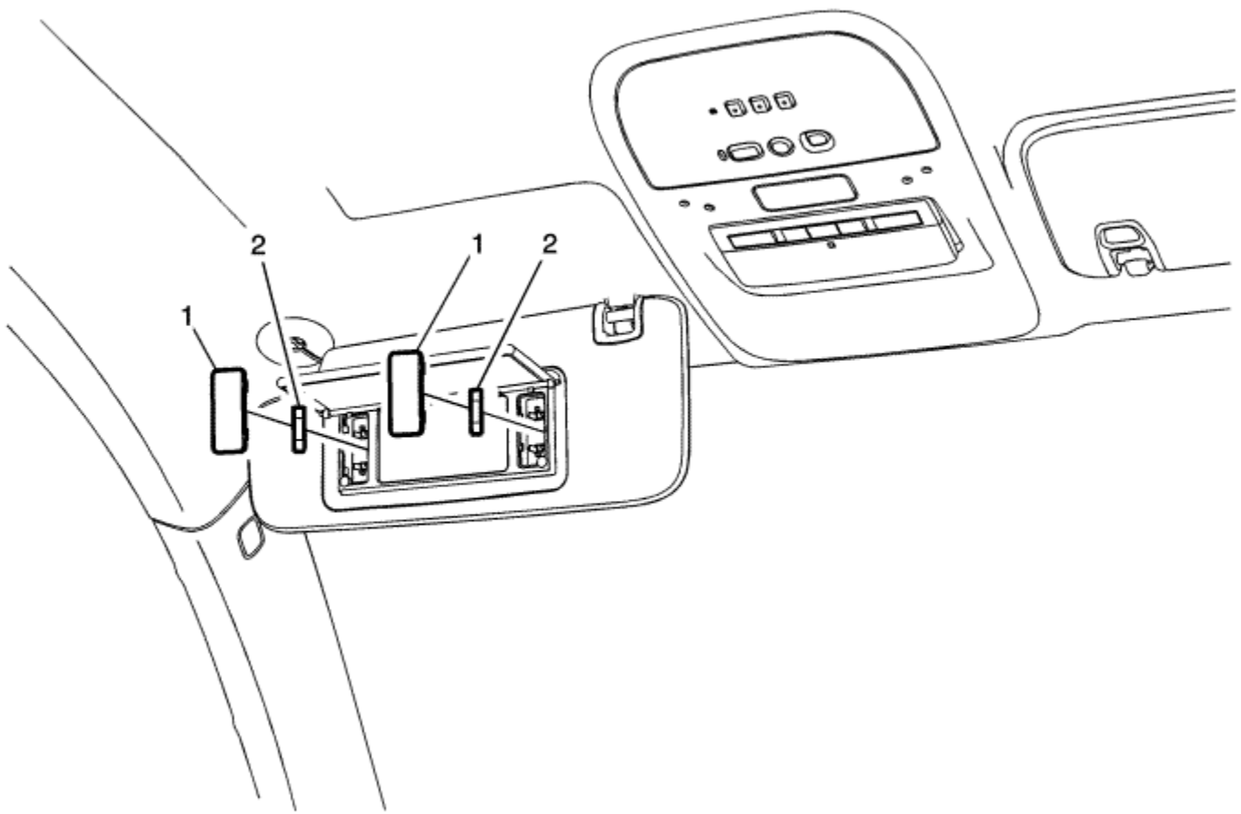

Callout	Component Name
1	Sun Visor Illuminated Mirror Lamp Lens (Qty: 2) **Procedure** Carefully use a flat bladed tool, and release the tabs retaining the lamp lens to the sun visor assembly.

2	Sun Visor Illuminated Mirror Lamp Bulb (Qty: 2)

© Copyright Chevrolet. All rights reserved

Outside Wing Mirror Indicator Lamp Replacement

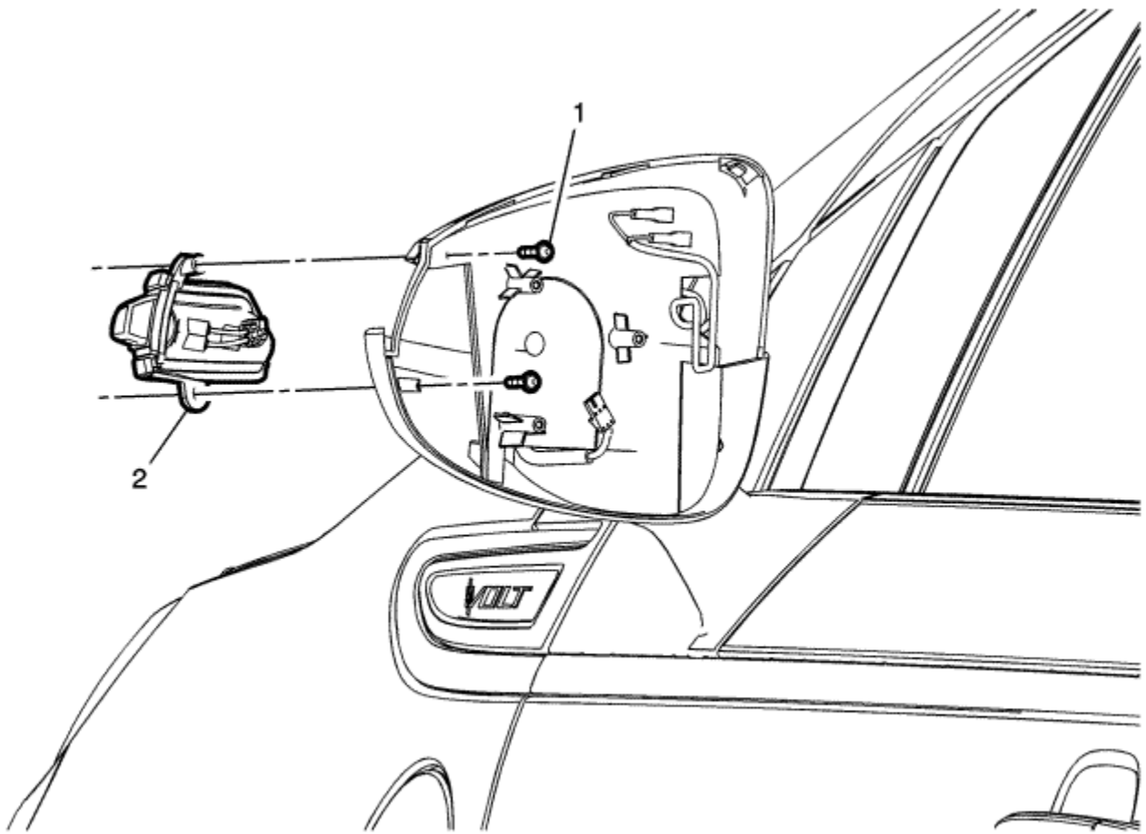

Callout	Component Name
Preliminary Procedure Remove the outside wing mirror housing bezel. Refer to Outside Wing Mirror Housing Bezel Replacement .	
	Outside Wing Mirror Indicator Lamp Screw (Qty: 2)

1	**Caution:** Refer to Fastener Caution in the Preface section. **Tighten** Hand tighten the screws.
2	Outside Wing Mirror Indicator Lamp **Procedure** 1. Disconnect the electrical connector to the indicator lamp. 2. Rotate the top side of the lamp outward and the bottom inward to disenegage the lamp from the outside wing mirror shell. 3. Remove the outside wing mirror indicator lamp and electrical harness from the outside wing mirror shell.

© Copyright Chevrolet. All rights reserved

Headlamp Replacement - Volt

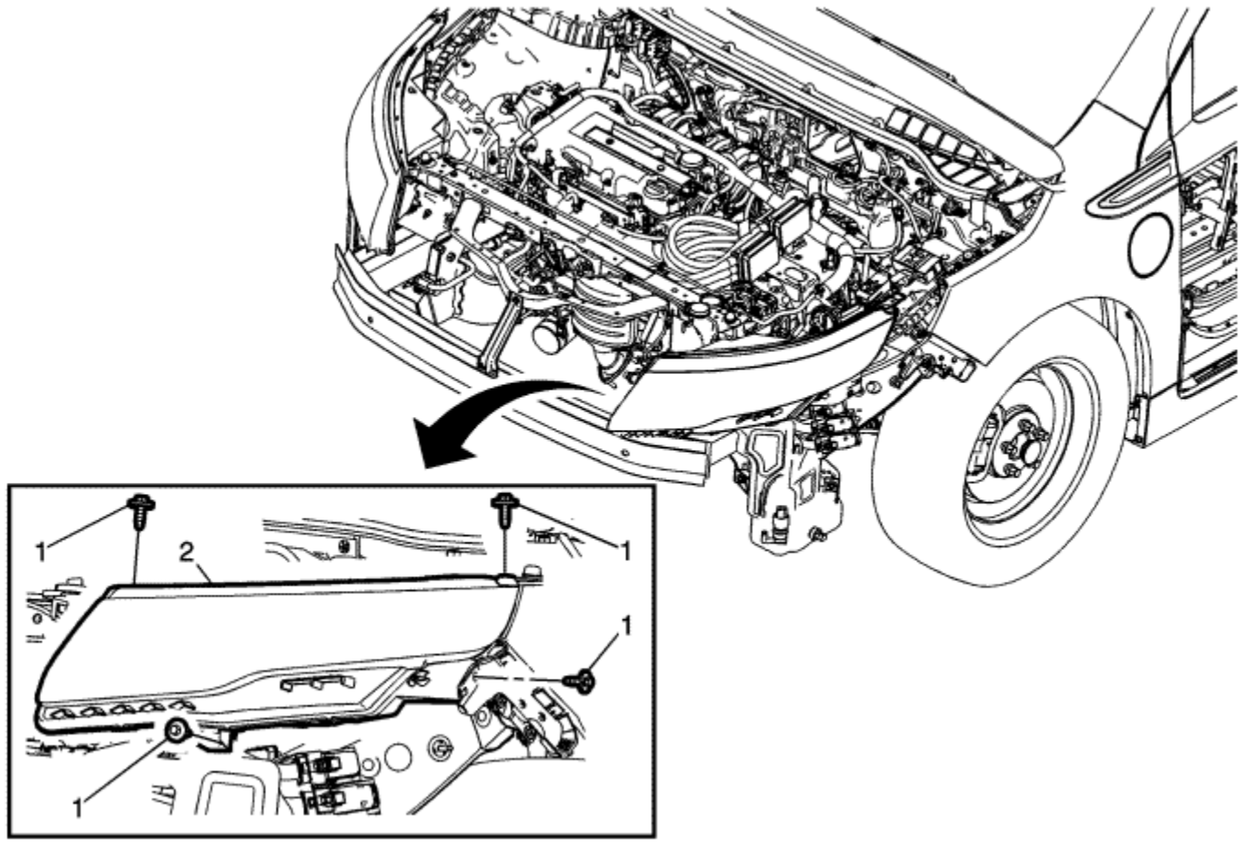

Callout	Component Name
Preliminary Procedures	

1. Remove the front bumper fascia. Refer to Front Bumper Fascia Removal and Installation : Volt → Ampera .
2. Remove the front compartment side sight shield. Refer to Front Compartment Side Sight Shield Replacement : Volt → Ampera .
3. Disconnect the headlamp electrical connection.

1	Headlamp Screw (Qty: 4) **Caution:** Refer to Fastener Caution in the Preface section. **Tighten** 2.5 N·m (22 lb in)
2	Headlamp Assembly **Warning:** Refer to Halogen Bulb Warning in the Preface section. **Procedure** 1. Remove the headlamp assembly from the vehicle. 2. Transfer the headlamp bulb accessory cover and bulb socket as needed. 3. Align the headlamps after replacement. Refer to Headlamp Aiming . **Note:** The drive motor battery charger is below the right front headlamp assembly.

© Copyright Chevrolet. All rights reserved

Headlamp Bulb Replacement

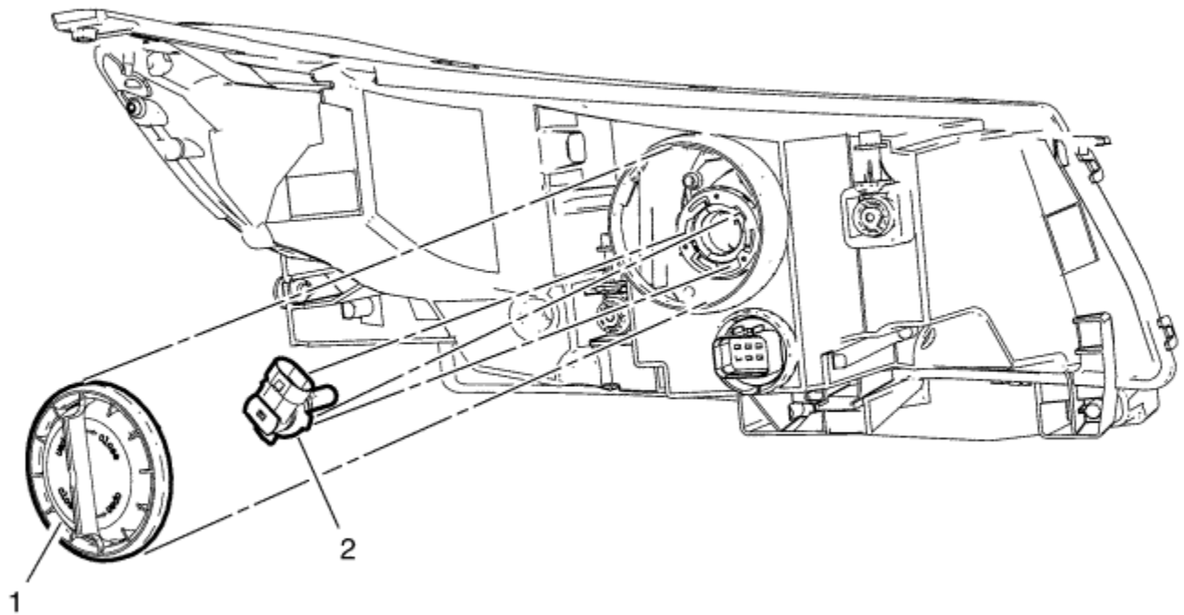

Callout	Component Name
1	Headlight Bulb Dust Cover
	Headlamp Bulb **Warning:** Refer to Halogen Bulb Warning in the Preface section.

2	**Procedure** 1. Disconnect the electrical connector from the headlamp bulb socket. 2. Rotate the bulb socket a quarter turn counterclockwise and remove the bulb socket from the headlamp housing. 3. Install the bulb socket in the correct position as shown in the graphic.

© Copyright Chevrolet. All rights reserved

Headlamp Alignment

Directive 76/756 EEC and ECE-Regulation 48 cover checking and alignment of headlights on vehicle. Correct alignment of headlamps of vehicles should enable optimal road illumination by the low beam with minimal glare to oncoming traffic. For this purpose the inclination of the light beam in relation to the road surface and the angle of the beam to the vertical longitudinal plane running through the vehicle centre must comply with the requirements laid down in the ECE regulation and EEC directive.

Glaring of the dipped beam is considered eliminated if the intensity of the illumination at a distance of 25 m (82 ft) from each individual headlight on the plane perpendicular to the road and at the height of the headlight as well as above, is not greater than 1 lux. This requirement is generally satisfied if the headlight alignment is carried out according to these alignment guidelines.

Main headlamp housing or retainer displays typically reference a 1.0 percent downward inclination for dipped beam alignment according to EEC 76/756 or ECE-R48 requirements.

Example for a display on a headlight with a 1.3% downward inclination for dipped beam alignment:

Reference 1.0 percent corresponds to the adjustment dimension of the headlamp with reference to the inclination of the light beam. The inclination at a distance of 10 m (33 ft) from vehicle headlamp is therefore 10 cm (4 in). The inclination of the dipped beam headlamp is indicated by its light/dark boundary (cut-off line).

The alignment guideline is shown by the following three illustrations.

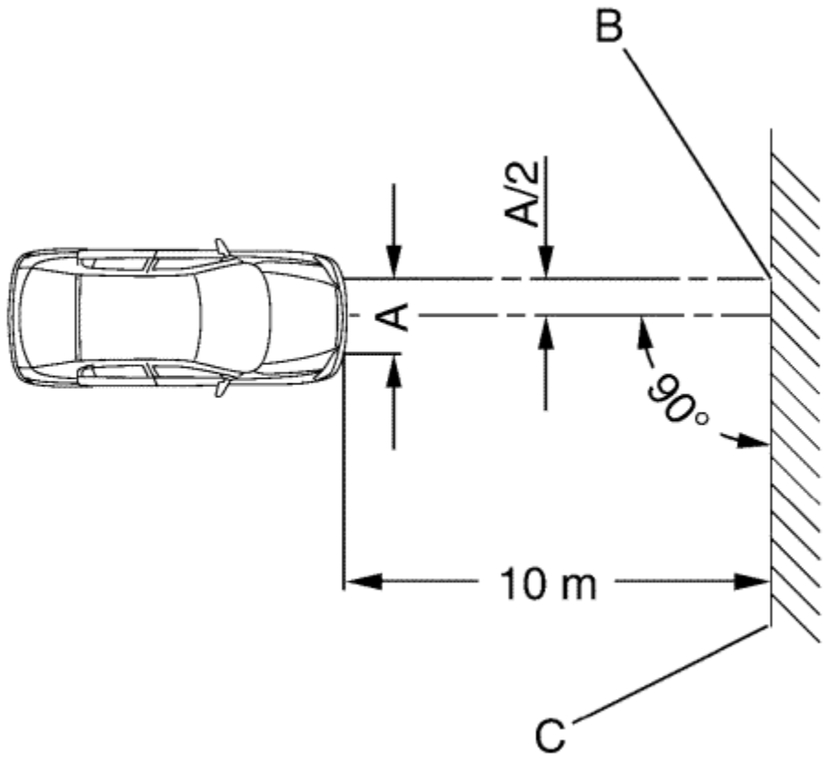

Abbreviations used:

A = Horizontal distance between headlamp centres

B = Central marking

C = Test surface

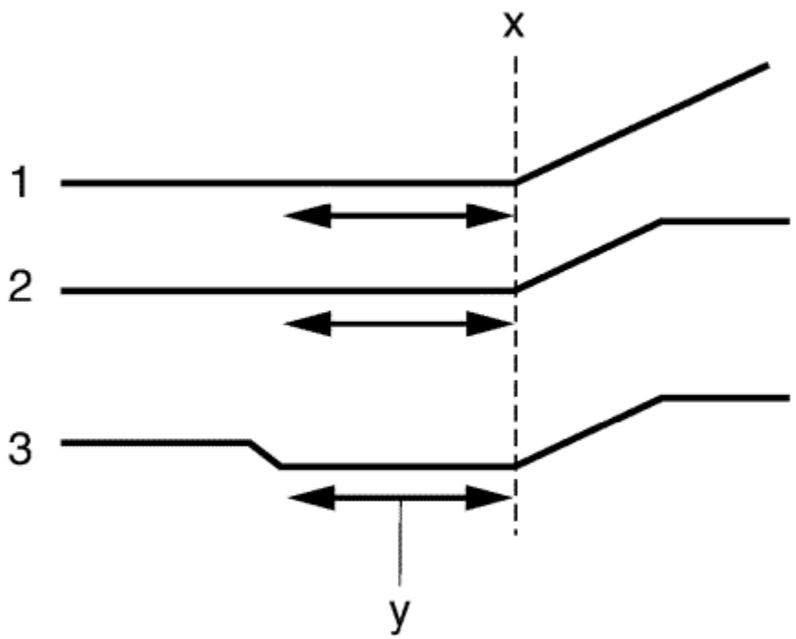

x = Kink of cut-off line for the left/right setting

y = Horizontal area of the cut-off line for up/down setting

1 = Halogen

2 = Xenon

3 = AFL+

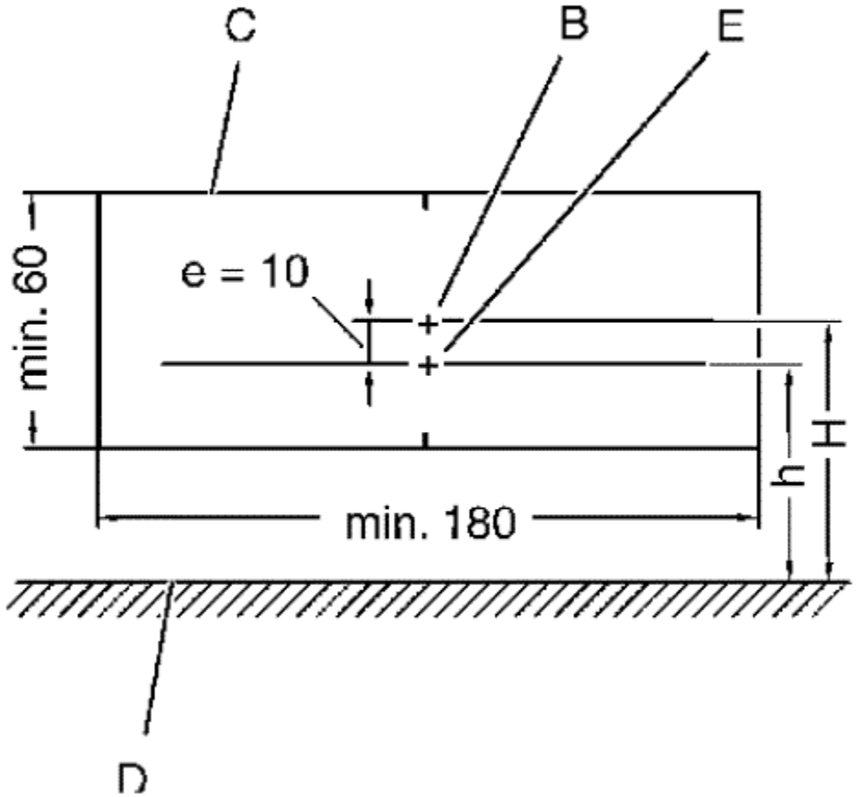

C = Test surface

D = Road surface

E = Break point (kink of cut-off line)

e = Aiming dimension in cm, e = H - h (aiming dimension, dipped beam headlamps usually at 1.0 percent, e = 10 cm (4 in), front fog lamps 2.0 percent, e = 20 cm (8 in), main beam headlamps (if separately amiable) at 0 percent, e = 0 cm (0 in).

H = Height of centre of headlamp over road surface

h = Height of light/dark boundary line (cut-off line) of dipped beam above road surface

The headlight alilgnment is performed according to the specifications, as shown in the illustrations, using an adjuster. When using a headlight adjuster, set up the height and position of the adjuster according to the instructions in the operation manual. Ensure that the vehicle tyre surface that is in contact with the road and the surface for setting up the adjuster are at the same level and parallel with each another.

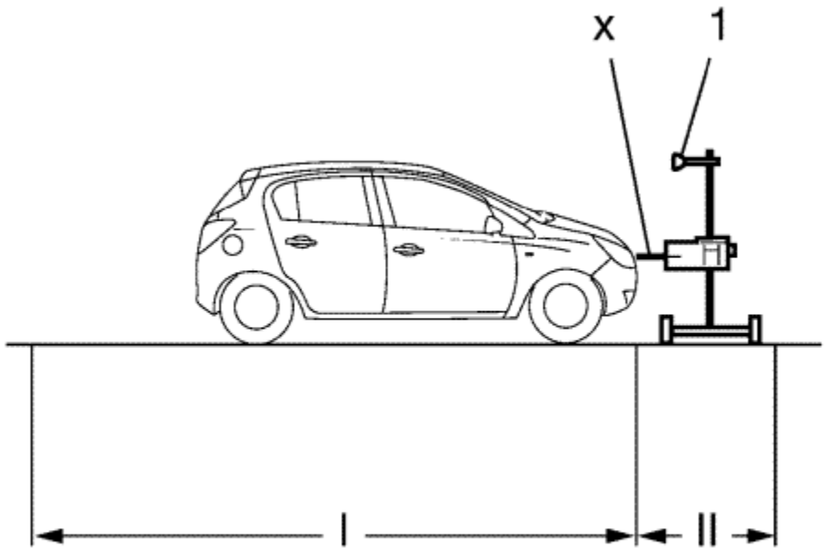

X = Centre of adjuster lens (see arrow mark on adjuster housing) must be aligned on the same level as the dipped beam headlight and must be parallel to the ground.

1 = Use marking of the control mirror (1) to align the adjuster system in the correct angle to the vehicle, based on the information shown in the owner operating instructions.

The distance between the adjuster lens and the headlight must be within 0.5 and 0.8 metres (refer to operation instructions of the adjuster system)

The surface on which the measuring instrument (adjuster system) and the vehicle stand must be flat. The level of the ground must not vary by more than **± 0.5 mm / m**.

- I = **± 0.1 mm / m**
- II = **± 0.5 mm / m**

Vehicle tyres must have specified air pressure. Blackened bulbs must be replaced before adjusting.

The adjustment is performed at vehicle curb weight plus one person or 75 kg (165 lb) on the driver's seat. (Curb weight = weight of vehicle ready for use with completely filled

fuel tank plus the weight of all equipment carried during use, e.g. spare wheel, tools, jack, first aid kit, emergency warning triangle, etc.).

For vehicle with a manual headlight levelling system switch the ignition on and position the adjuster wheel of the manual headlight range control at the light switch centre to "0".

The intersection between the horizontal and the ascending parts of the cut-off line (break point) must lie on the perpendicular through the central marking.

For easier determination of the intersection point, headlamp halves can be alternately covered and uncovered.

The headlamp adjusting equipment used must comply with the existing guidelines and the manufacturer's operating instructions must be observed.

The headlamp adjuster must be regularly checked by manufacturer's maintenance service.

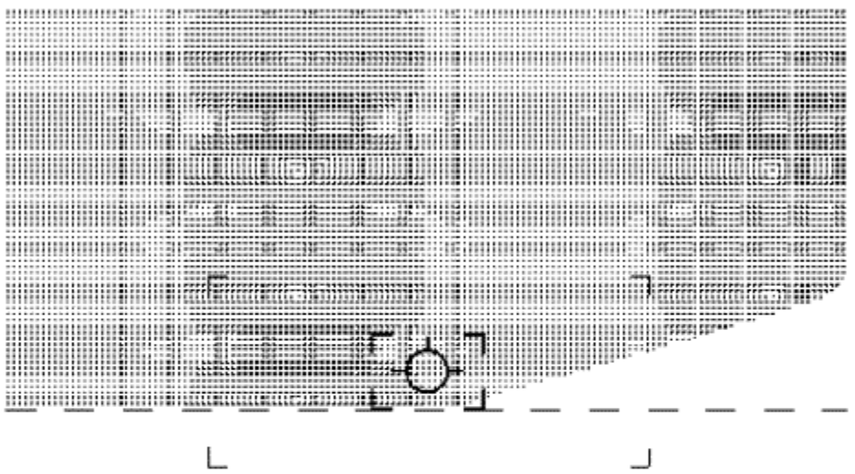

Example of a halogen dipped beam light pattern on a headlamp adjuster screen. Refer to the operating manual of the adjuster system.

The headlamp adjuster is set up according to manufacturer's guidelines and is adjusted to 1.0 percent downwards inclination for the dipped beam or 2.0 percent inclination for the fog lamp or 0% for the main beam (if separately aimable). If not advised differently on the headlight.

According to the directive 76/756/EEC the 15 degree line is no longer required for the dipped beam on the measurement screen. The adjustment direction can also be undertaken with headlight aiming equipment which shows the 15 degree line on the measurement screen (For all headlights).

Depending on the specific inner design of the headlamps, the movement of the light beam on the measurement screen is not exactly vertical or horizontal during the alignment on the alignment screws. This is caused by the technical solution of the suspension of the reflectors in the headlamp housing. After alignment of one axis the alignment of the other axis should be rechecked. For instance the vertical alignment could be changed a bit after the alignment of the horizontal axis. Therefore the vertical axis must be checked and if necessary aligned again after the alignment of the horizontal axis.

If a headlamp shows a significant deviation from the correct alignment for both horizontal and vertical direction the alignment operation must be performed step by step for the two directions. This means that in such a case the alignment of horizontal and vertical direction must be done alternately in small steps. Not more than one turn of an alignment screw shall be performed at once. After one turn change to the other alignment screw. Repeat this procedure until the headlamp is correctly aligned.

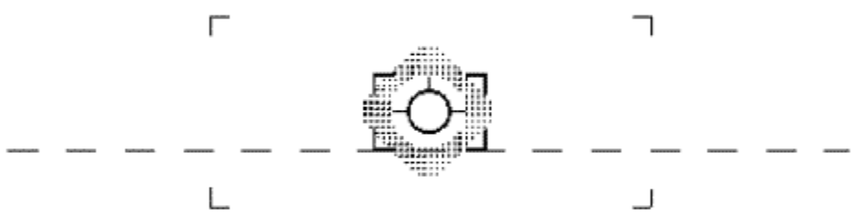

Example of a main beam light pattern on a headlamp adjuster screen. Refer to the operating manual of the adjuster system.

In headlights where the main and dipped beam can be aimed, the centre of the main beam must lie within the boundary corners around the central mark.

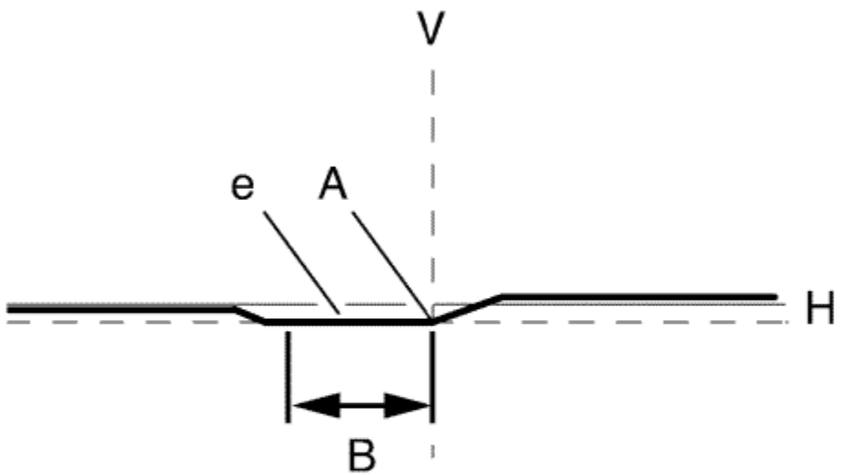

Only Vehicles with AFL+

Turn headlamp switch into position II (dipped beam)

A= Break point for the side setting in line V

B= Setting of the height by means of cut-off line in this area usually at 1 percent (e = 10 cm or 4 in) downward inclination.

e = Aiming dimension.

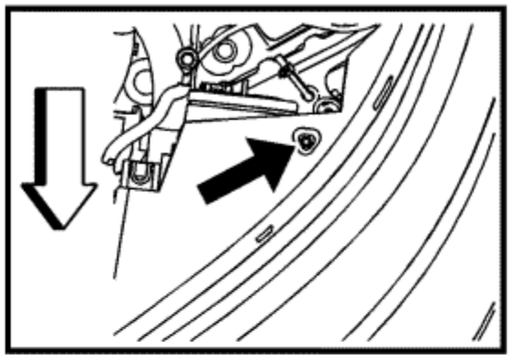

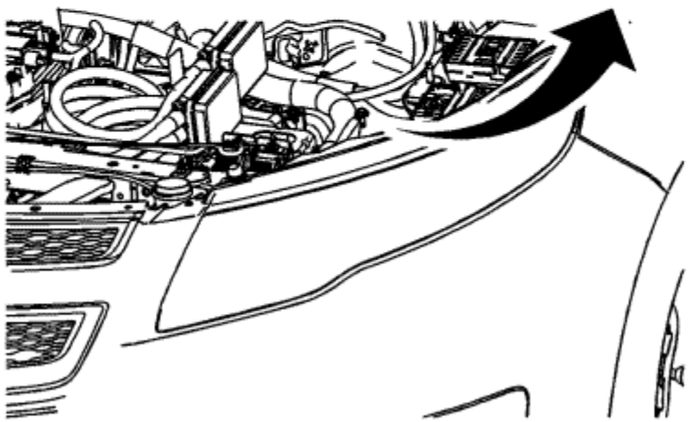

Note: The headlamps can not be adjusted horizontally.

1. Adjust the vertical alignment screw of the headlamps to the specifications required by the state and the local authorities.
2. Repeat the alignment procedure for the passenger side headlamp while blocking the light from projecting onto the screen from the driver side headlamp. Headlights must be alignment using a legally specified projection wall or with optical headlight adjuster.

For the vertical alignment (adjustment of height) the cut-off line on the left side of the adjustment cross must be parallel to the horizontal adjustment line.

Note: Carry out vertical alignment first, then lateral alignment. Check vertical alignment again after lateral alignment.

For the horizontal alignment (adjustment of the side) the cut-off line must be horizontal on the left side of the adjustment cross and rising upward on the right side of the adjustment cross. The downward inclination is typically 1.0 percent.

Note: This description is valid for right hand traffic. For left hand traffic the light pattern of left and right side is mirrored.

The reference run must be performed for each single headlamp after alignment. During the reference run check for enough clearance between the projector module and the reflector and that the module bezel is free from scratches. In case of a touch condition between the projector module and bezel during the reference run or visible scratches

on the bezel the headlamp alignment must be checked again. Conditions like these occur if the aiming differs extremely from the set position.

Note: DO NOT aim the headlamps when the headlamp switch is on position "AUTO" and the engine is running. In this case the headlights turn for 8° outward to go into the play street mode.

&#169© Copyright Chevrolet. All rights reserved

Front Indicator Lamp Replacement - Volt

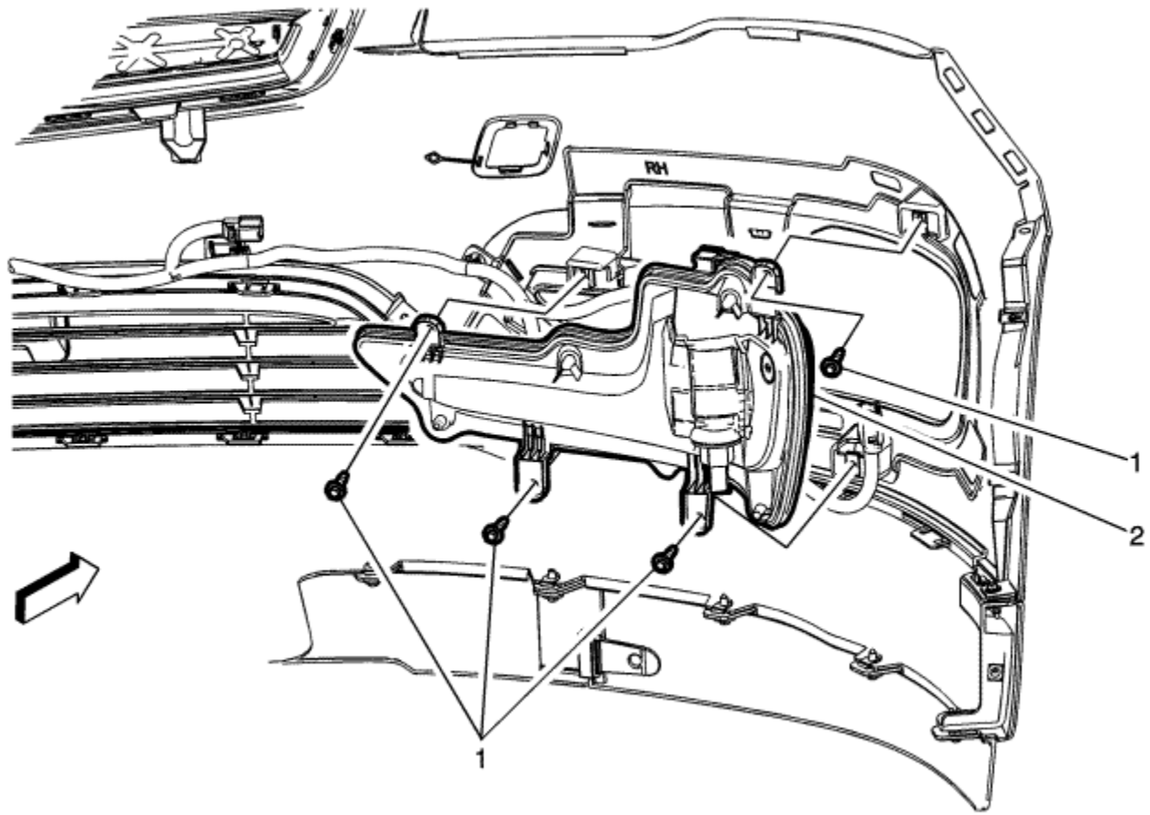

Callout	Component Name
Preliminary Procedures	

1. Remove the front bumper fascia. Refer to Front Bumper Fascia Removal and Installation : Volt → Ampera .
2. Disconnect the forward lamp harness electrical connector from the front indicator lamp socket.
3. Transfer the bulb and bulb socket as needed, rotate counter-clockwise in order to remove.

1	Indicator Lamp Screw (Qty: 4) **Caution:** Refer to Fastener Caution in the Preface section. **Tighten** 2.5 N·m (22 lb in)
2	Indicator Lamp Assembly **Warning:** Refer to Halogen Bulb Warning in the Preface section.

© Copyright Chevrolet. All rights reserved

Rear Fog Lamp Replacement - Volt Ampera (T79)

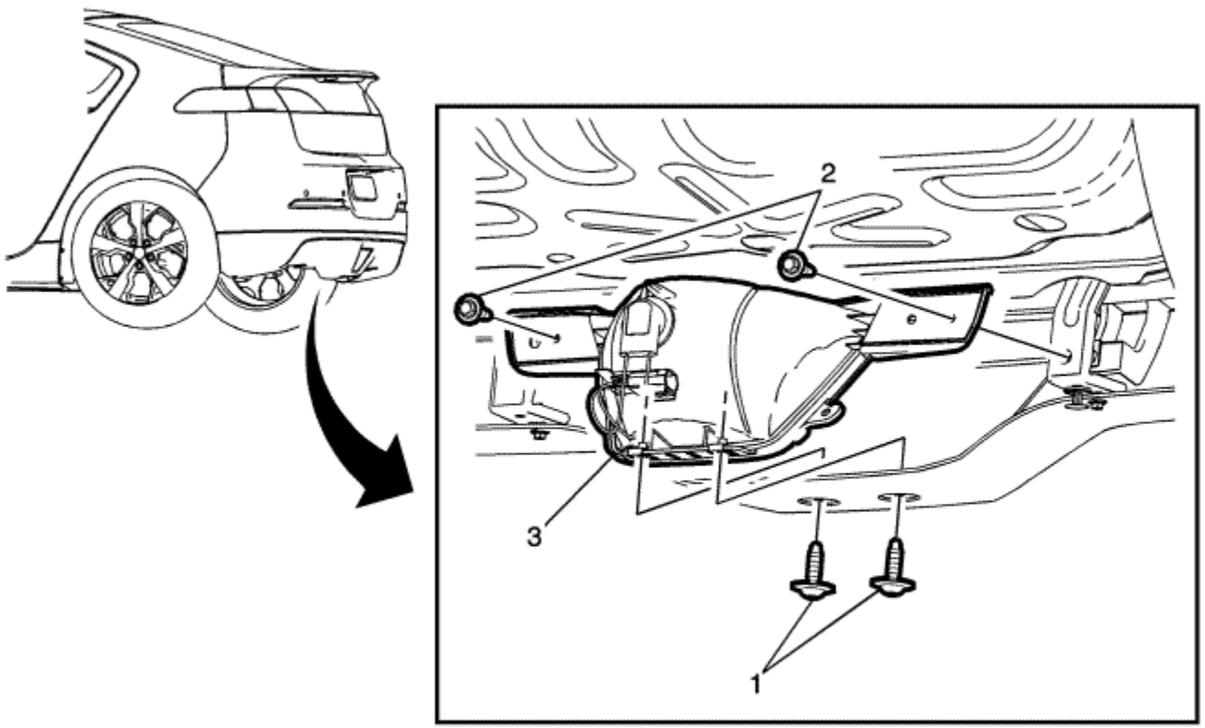

Callout	Component Name
Preliminary Procedure	

1. Remove the underbody rear air deflector. Refer to Underbody Rear Air Deflector Replacement .
2. Disconnect the electrical connector from the tail lamp harness.
3. Transfer the electrical connector jumper harness as needed.

1	Rear Bumper Fascia Lower Screw (Qty: 2) **Caution:** Refer to Fastener Caution in the Preface section. **Tighten** 2.5 N·m (22 lb in)
2	Rear Energy Absorber Screw (Qty: 2) **Caution:** Refer to Fastener Caution in the Preface section. **Tighten** 2.5 N·m (22 lb in)
3	Rear Fog Lamp

© Copyright Chevrolet. All rights reserved

Rear Fog Lamp Bulb Replacement - Volt Ampera (T79)

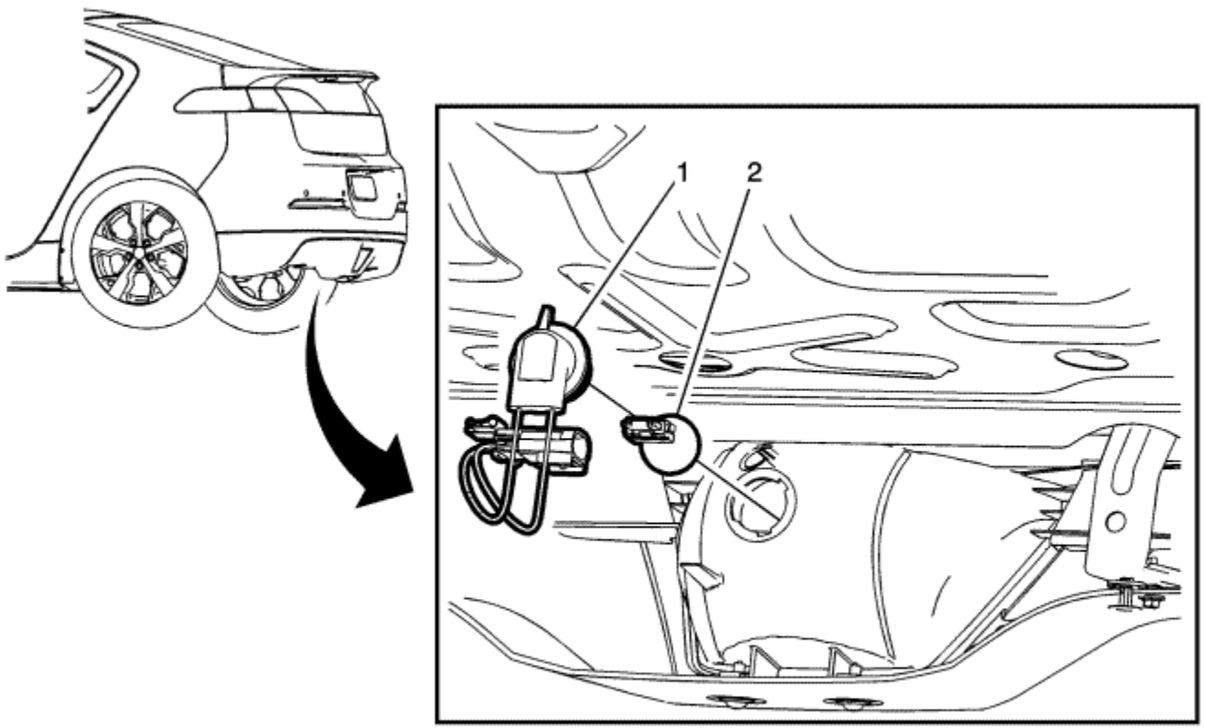

Callout	Component Name
Preliminary Procedure Remove the underbody rear air deflector. Refer to Underbody Rear Air Deflector Replacement .	
	Rear Fog Lamp Bulb Socket

1	**Procedure** Rotate the bulb socket a quarter turn counter-clockwise and remove from the fog lamp housing.
2	Rear Fog Light Bulb **Tip** Do not touch the bulb with bare fingers, use a cotton shop towel to cover when replacing the bulb.

© Copyright Chevrolet. All rights reserved

Rear Reflector Replacement - Volt

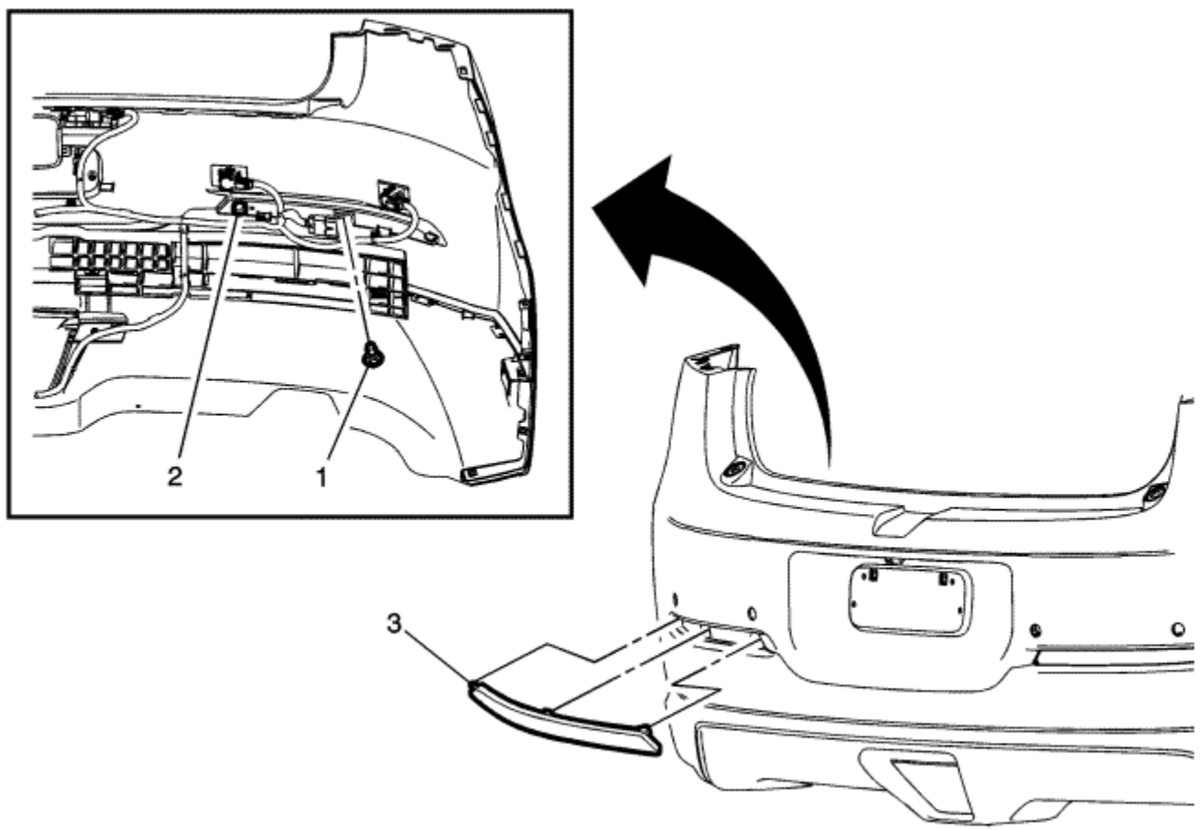

Callout	Component Name
Preliminary Procedure Remove the rear bumper fascia. Refer to Rear Bumper Fascia Removal and Installation : Volt → Ampera .	
	Rear Reflector Bolt

1	**Caution:** Refer to Fastener Caution in the Preface section. **Tighten** 9 N·m (80 lb in)
2	Rear Reflector Retainer **Procedure** Compress the retainer tabs and press out from the fascia.
3	Rear Reflector

© Copyright Chevrolet. All rights reserved

Front Indicator Lamp Bulb Replacement - Volt

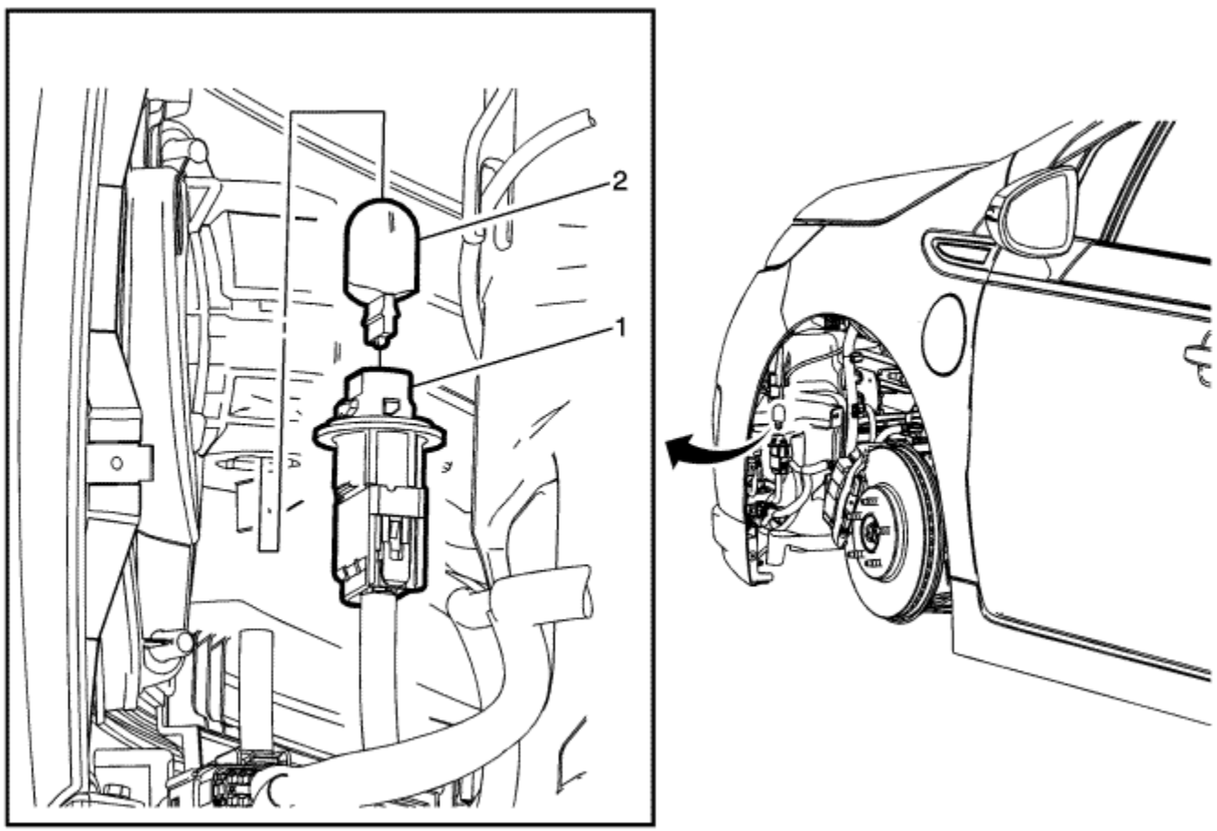

Callout	Component Name
Preliminary Remove the front wheelhouse front liner. Refer to Front Wheelhouse Front Liner Replacement .	
	Front Indicator Bulb Socket

1	**Procedure** Rotate the bulb socket a quarter tun counter-clockwise and remove the front indicator lamp assembly.
2	Front Indicator Bulb **Procedure** Pull the indicator lamp bulb from the front indicator lamp bulb socket.

© Copyright Chevrolet. All rights reserved

High Mount Brake lamp Replacement

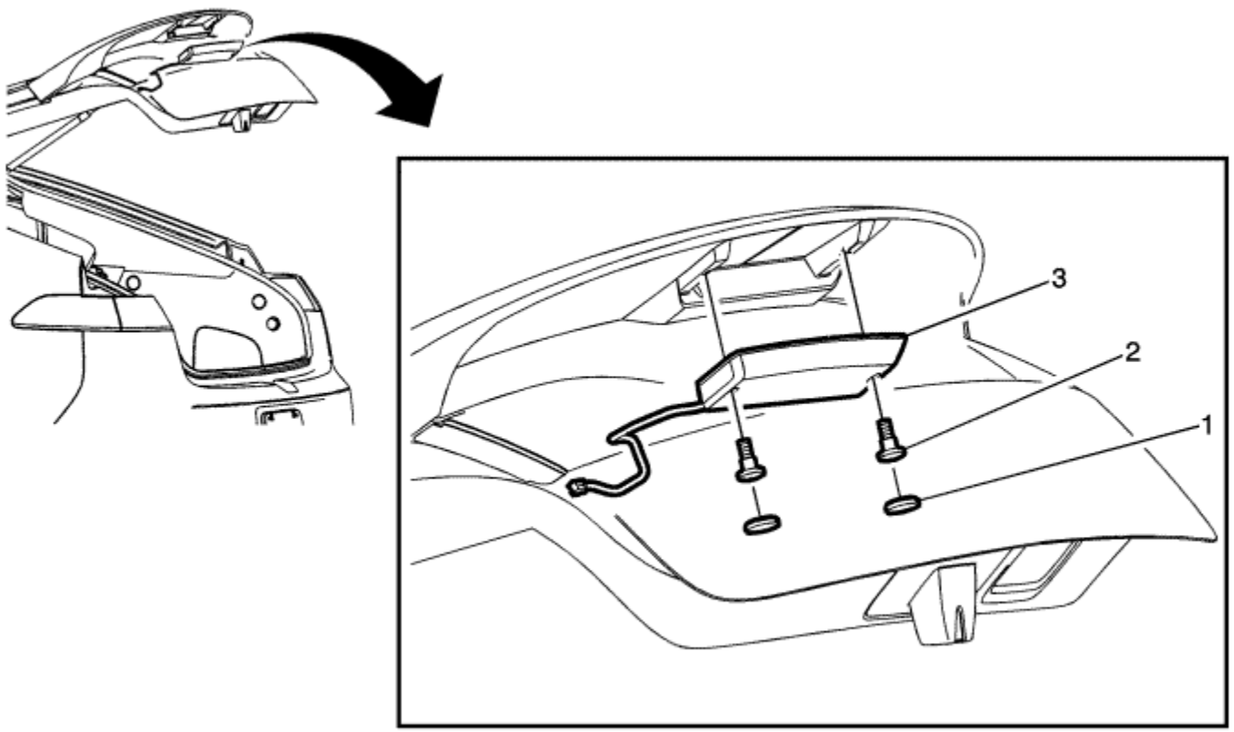

Callout	Component Name
Preliminary Procedures	

1. Open and support the tailgate assembly.
2. Remove the tailgate lower trim finish panel. Refer to Tailgate Lower Trim Finish Panel Replacement .
3. Disconnect the high mount brake lamp electrical connector from the main tailgate harness.

1	High Mount Brake Lamp Access Hole Cover (Qty: 2)
2	High Mount Stop Lamp Screw (Qty: 2) **Caution:** Refer to Fastener Caution in the Preface section. **Tighten** 2.5 N·m (22 lb in)
3	High Mount Brake Lamp **Procedure** Remove the high mount brake lamp and harness connector from the rear end spoiler.

© Copyright Chevrolet. All rights reserved

Cargo Centre Courtesy Lamp Bulb Replacement

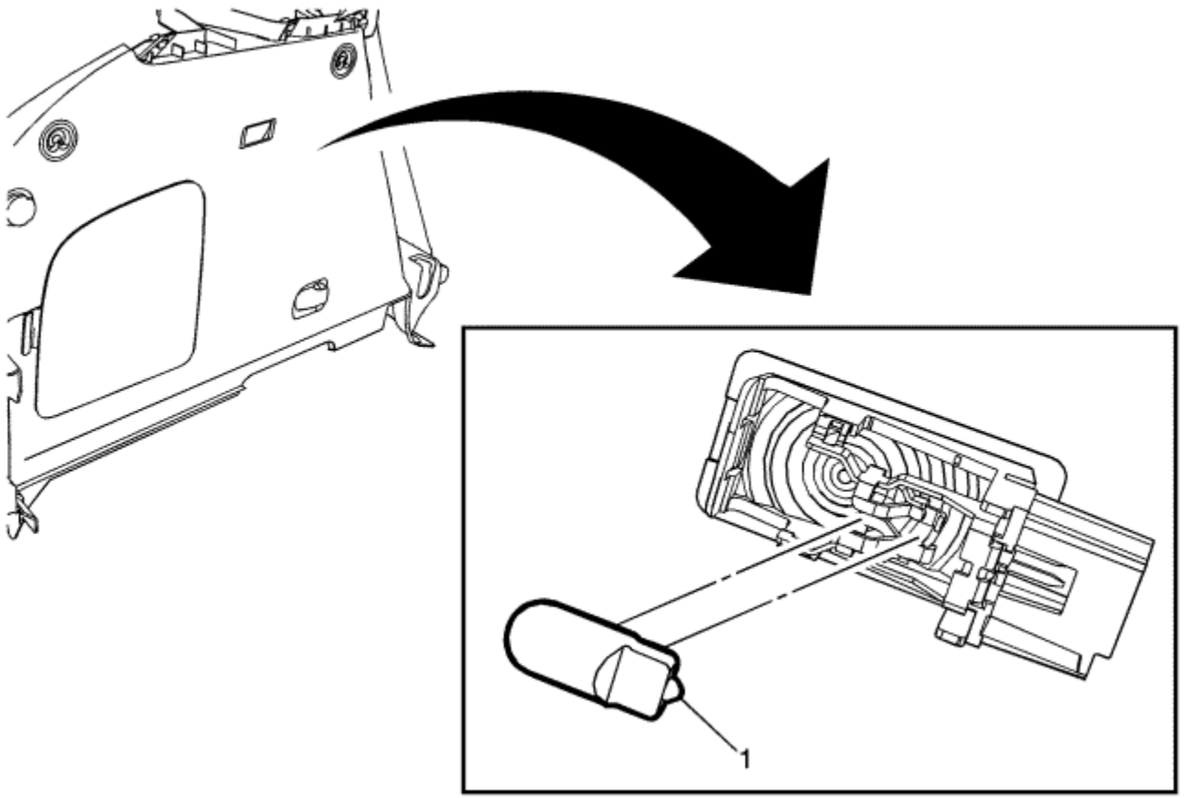

Callout	Component Name
Preliminary Procedure Remove the rear compartment courtesy lamp. Refer to Rear Compartment Courtesy Lamp Replacement .	
1	Cargo Lamp Bulb

© Copyright Chevrolet. All rights reserved

Reverse Lamp Replacement

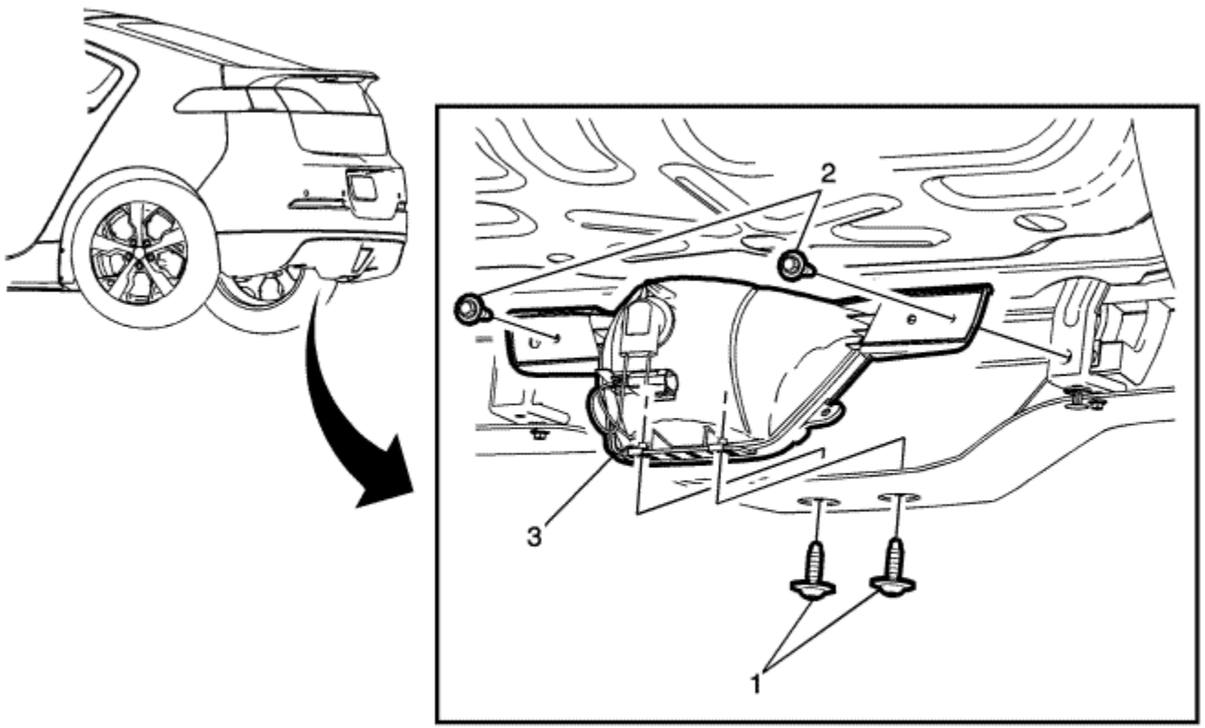

Callout	Component Name
Preliminary Procedure	
1. Remove the underbody rear air deflector. Refer to Underbody Rear Air Deflector Replacement . 2. Disconnect the electrical connector from the tail lamp harness. 3. Transfer the electrical connector jumper harness as needed.	

1	Rear Bumper Fascia Lower Screw (Qty: 2) **Caution:** Refer to Fastener Caution in the Preface section. **Tighten** 2.5 N·m (22 lb in)
2	Rear Energy Absorber Screw (Qty: 2) **Caution:** Refer to Fastener Caution in the Preface section. **Tighten** 2.5 N·m (22 lb in)
3	Reverse Lamp

© Copyright Chevrolet. All rights reserved

Reverse Lamp Bulb Replacement

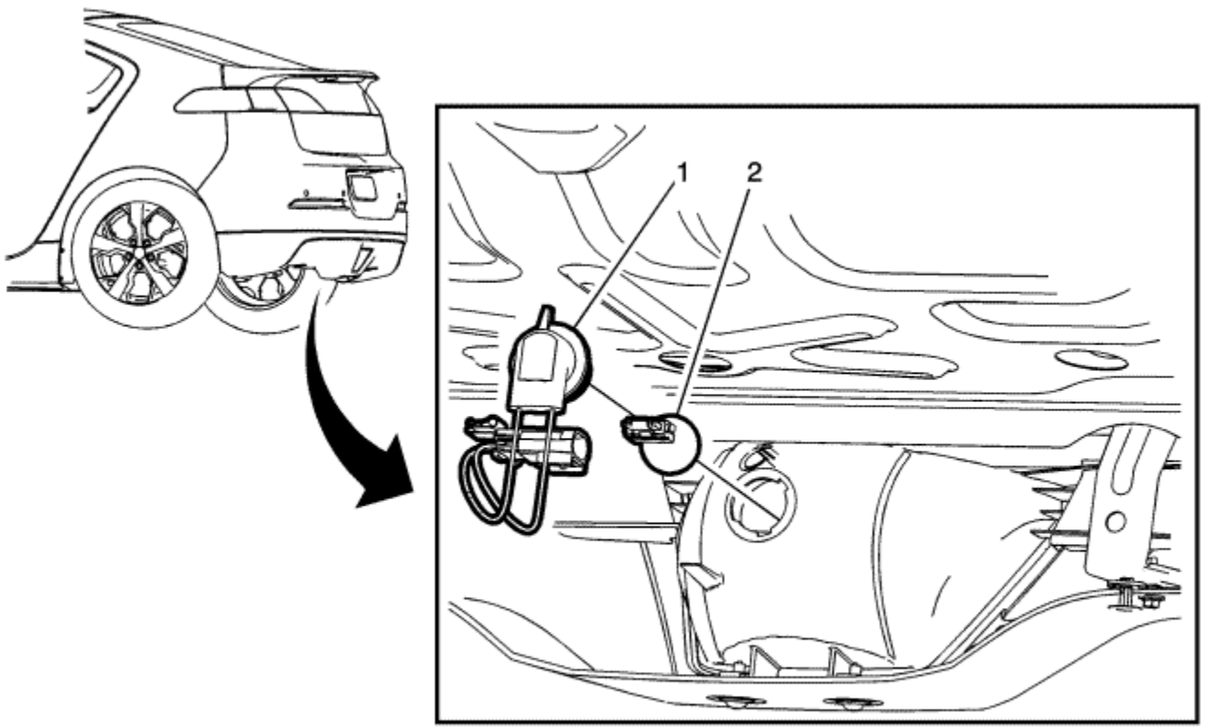

Callout	Component Name
Preliminary Procedure Remove the underbody rear air deflector. Refer to Underbody Rear Air Deflector Replacement .	
	Reverse Lamp Bulb Socket

1	**Procedure** Rotate the bulb socket a quarter turn counter-clockwise and remove from the lamp housing.
2	Reverse Lamp Bulb **Tip** Do not touch the bulb with bare fingers, use a cotton shop towel to cover when replacing the bulb.

© Copyright Chevrolet. All rights reserved

Rear Number Plate Lamp Replacement

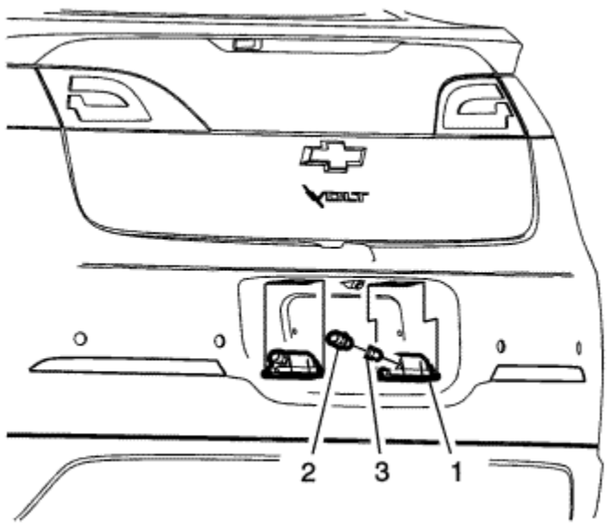

Callout	Component Name
1	Number Plate Lamp **Procedure** 1. Using a flat-bladed tool, insert the tool on the passenger side of the lamp and push inward and rotate downward to disengage the lamp from the rear bumper fascia opening. 2. Rotate the bulb socket anticlockwise to remove from the lamp housing.
2	Number Plate Lamp Bulb Socket
3	Number Plate Lamp Bulb

© Copyright Chevrolet. All rights reserved

Rear Number Plate Lamp Bulb Replacement

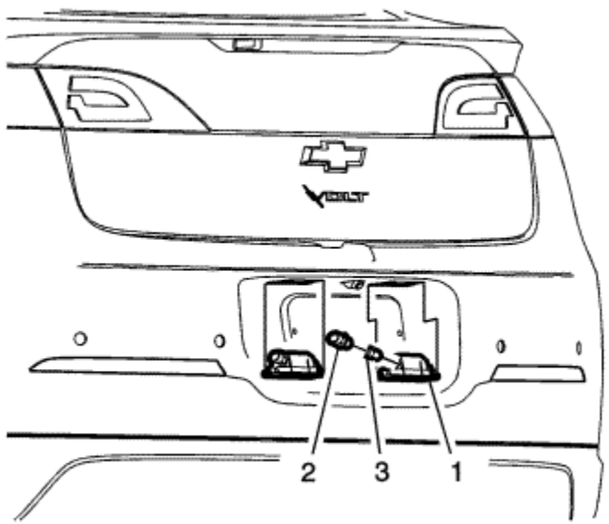

Callout	Component Name
1	Number Plate Lamp **Procedure** Using a flat-bladed tool, insert the tool on the passenger side of the lamp and push inward and rotate downward to disengage the lamp from the rear bumper fascia opening.
2	Number Plate Lamp Bulb Socket **Tip** Rotate the lamp socket a quarter turn counter-clockwise in order to remove.
3	Number Plate Lamp Bulb **Tip** Pull the lamp bulb from the bulb socket.

© Copyright Chevrolet. All rights reserved

Tail Lamp Replacement

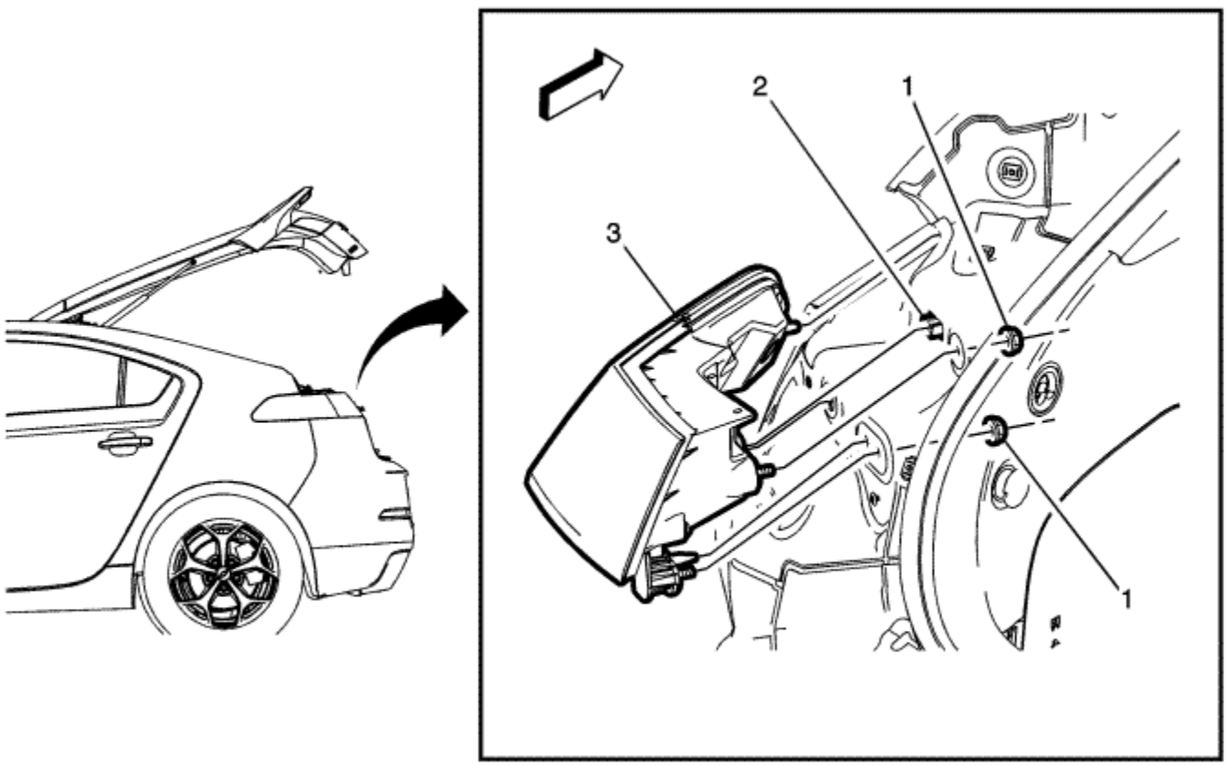

Callout	Component Name
Preliminary Procedures	

1. Remove either the LH or RH rear bumper fascia inner guide. Refer to Rear Bumper Fascia Inner Guide Replacement .
2. Remove the quarter panel tail lamp upper molding. Refer to Quarter Panel Tail Lamp Upper Molding Replacement .
3. Reposition the sound deadening material in order to access the tail lamp nuts.

1	Tail Lamp Nut (Qty: 2) **Caution:** Refer to Fastener Caution in the Preface section. **Tighten** 4.7 N·m (42 lb in)
2	Tail Lamp Electrical Connector
3	Tail Lamp Assembly **Procedure** Upon removal, grasp the tail lamp and give a quick pull rearward in order to disengage the outer tail lamp locator pin from the tail lamp pocket. **Tip** The tail lamp is serviced as a unit, the tail lamp is (LED) Light Emitting Diode.

© Copyright Chevrolet. All rights reserved

Rear Compartment Courtesy Lamp Replacement

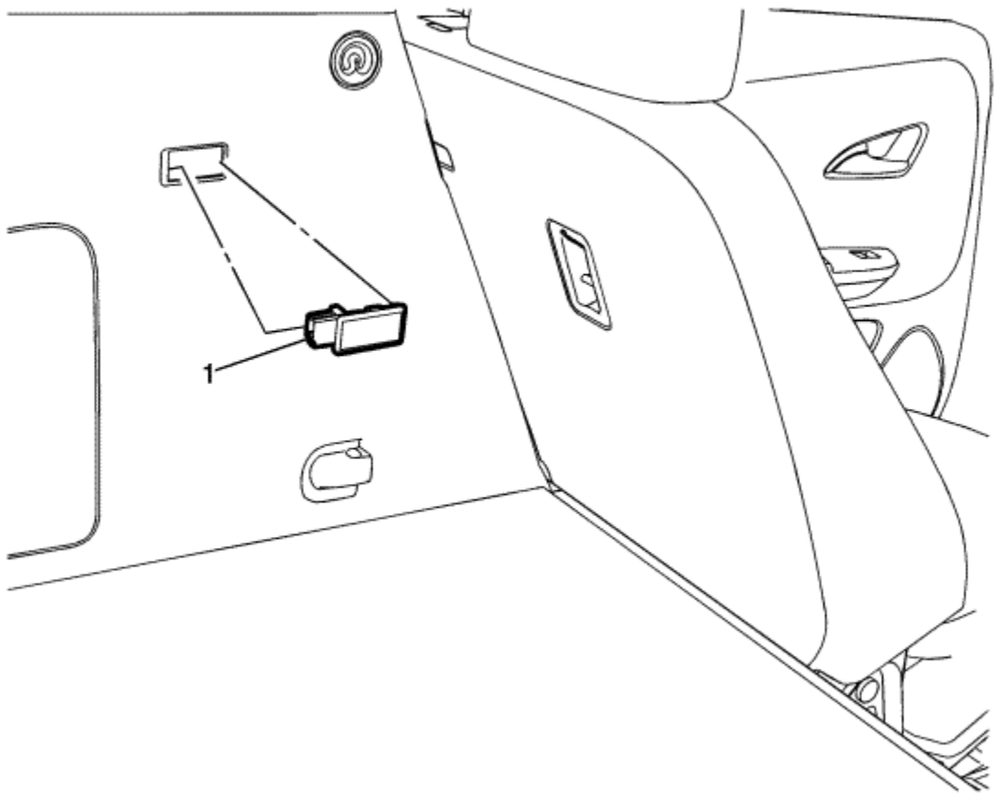

Callout	Component Name
1	Rear Compartment Courtesy Lamp Assembly **Procedure** 1. Use the appropriate trim tool in order to release the lamp assembly from the rear quarter trim panel.

	2. Disconnect the electrical connection.

© Copyright Chevrolet. All rights reserved

Exterior Lighting Systems Description and Operation

Exterior Lamps

The exterior lighting system consist of the following lamps if equipped:

- Headlamps
- Front fog lamps
- Rear fog lamps:
- Sidelight, tail and number plate lamps
- Indicator lamps
- Hazard warning lamps
- Repeater lamps
- Brake lamps
- Reverse lamps

Dipped Beam Headlamps

The headlamps consist of one single bulb which provides dipped and main beam. The body control module (BCM) controls the headlamps based on the inputs of the headlamp switch. When a dipped beam request is received, the BCM supplies a B+ to the dipped beam headlamps, illuminating the dipped beam headlamps. When a main beam request is received, the BCM grounds the headlamp main beam relay control circuit.

Flash to Pass

When the dipped beam headlamps are on and the indicator/multifunction switch is momentarily placed in the flash to pass position, ground is applied to the indicator/multifunction switch. The indicator/multifunction switch applies ground to the BCM through the flash to pass switch signal circuit. The BCM then applies ground to the main beam relay control circuit. This energises the main beam relay, closing the switch side contacts of the main beam relay, applying battery voltage to the left and right main beam fuses. Battery voltage is applied from the main beam fuses through the main beam voltage supply circuit to the main beam headlamp assemblies. This causes the main beam headlamps to illuminate at full brightness momentarily or until the flash to pass switch is released.

Front Fog Lamps

The front fog lamp switch signal circuit is grounded momentarily by pressing the front fog lamp switch. The body control module (BCM) energises the front fog lamp relay by

applying ground to the front fog lamp relay control circuit. When the front fog lamp relay is energised, the relay switch contacts close and battery voltage is applied through the front fog lamp fuse to the front fog lamp supply voltage circuit which illuminates the front fog lamps.

Rear Fog Lamps RPO T79

The rear fog lamp switch signal circuit is grounded through a resistor momentarily by pressing the rear fog lamp switch. The body control module (BCM) energises the rear fog lamp supply voltage circuit which illuminates the rear fog lamp. With the rear fog lamp switch activated the BCM sends a message via serial data to the instrument cluster requesting the instrument cluster to illuminate the rear fog indicator.

Sidelight, Tail and Number Plate Lamps

The sidelights, tail lamps and number plate lights are turned ON when the headlamp switch is placed in the SIDELIGHT or DIPPED BEAM position or anytime the headlamps are requested. When the BCM receives a request from the headlamp switch to turn ON the sidelights the BCM a sends out a PWM signal, which illuminates the sidelights, tail lamps and number plate lights.

Indicator Lamps

Ground is applied at all times to the indicator/multifunction switch. The indicator lamps may only be activated with the ignition switch in the ON or START position. When the indicator/multifunction switch is placed in either the TURN RIGHT or TURN LEFT position, ground is applied to the BCM through either the right or left indicator switch signal circuit. The BCM then applies a pulsating voltage to the front and rear indicator lamps through their respective voltage supply circuits. When a indicator request is received by the BCM, a serial data message is sent to the instrument cluster requesting the respective indicator indicator be pulsed ON and OFF.

Repeater Lamps

The repeater lamps are located in the front wing. The repeater lamps are used as additional indicator lamps, and operate as described in the Indicator/Hazard Flasher Lamps description.

Hazard Flasher Lamps

The hazard flashers may be activated in any power mode. The hazard switch is permanently grounded. When the hazard switch is placed in the ON position, ground is applied through the hazard switch signal circuit to the BCM. The BCM supplies battery voltage to all indicator lamps in an ON and OFF duty cycle. When the hazard switch is activated, the BCM sends a serial data message to the instrument cluster requesting both indicator indicators to be cycled ON and OFF.

Brake Lamps

The brake pedal position (BPP) sensor is used to sense the action of the driver application of the brake pedal. The BPP sensor provides an analogue voltage signal that will increase as the brake pedal is applied. The BCM provides a low reference signal and a 5 V reference voltage to the BPP sensor. When the variable signal reaches a voltage threshold indicating the brakes have been applied, the BCM will apply battery voltage to the brake lamp control circuit and centre high mounted brake lamp control circuit. When the control circuit is energised the brake lamps are illuminated.

Reverse Lamps

When the transmission is placed in the reverse position, the engine control module (ECM) sends a serial data message to the BCM. The message indicates that the gear selector is in the reverse position. The BCM applies battery voltage to the reverse lamps. The reverse lamps are permanently grounded. Once the driver moves the gear selector out of the reverse position, a message is sent by the ECM via serial data requesting the BCM to remove battery voltage from the reverse lamp control circuit.

Battery Run Down Protection/Inadvertent Power

To provide battery run down protection, the exterior lamps will be deactivated automatically under certain conditions. The BCM monitors the state of the headlamp switch. If the sidelight or headlamp switch is ON when the ignition switch is placed in either the CRANK or RUN position and then placed in the OFF position, the BCM initiates a 10 min timer. At the end of the 10 min, the BCM will turn off the control power output to the sidelight and headlamp relay coils, deactivating the exterior lamps. This feature will be cancelled if any power mode other than OFF becomes active. The BCM will disable battery run down protection if any of the following conditions exist. The sidelight or headlamp switch is placed in the ON to OFF position, and back to the ON position during battery run down protection. The BCM determined that the park or headlamp switch was not active when the ignition was turned OFF.

&#169© Copyright Chevrolet. All rights reserved

Interior Lighting Systems Description and Operation

Interior Lamps

The interior lamps consist of 2 groups, those which can dim from the instrument panel cluster lamps dimmer switch and those that can not dim.

Courtesy/Illuminated Entry Lamps

The following lamps may be manually turned ON by placing the interior lamp switch in the ON position, or by opening a door while the switch is in the AUTO position.

- The interior light
- The tailgate lamps
- Courtesy lamps

The courtesy lamp supply voltage circuit of the body control module (BCM) supplies battery positive voltage to the interior light, the tailgate lamps and courtesy lamps. When any door is opened, the door jamb switch contacts close providing a door open input to the BCM. The BCM then provides a B+ to the interior lamps with the switch in the AUTO position. The interior lamps receive a ground when the switch is in the ON position.

Note: If the tailgate is opened after all the modules go to sleep, the dome light will not come on. The tailgate ajar switch input to the BCM will not wake up the BCM once it has gone to sleep, so the dome light will not come on. Once the BCM gets an input to wake it up, from remote keyless entry or a door handle, the dome light will turn on when the tailgate is opened.

If the driver inadvertently leaves any interior lamp ON, the BCM will turn it OFF after a 20 min time-out.

The courtesy lights will turn OFF immediately if the ignition switch is turned to the ON position or approximately 20 s after all doors are closed.

The courtesy lamps will normally turn OFF using the theater dimming feature.

Keyless Entry Interior Illumination

When the BCM receives a door unlock command from the remote keyless entry transmitter, the BCM will flash the indicator lamps several times, illuminate the courtesy and sidelights, and illuminate the dipped beam headlamps at low intensity. The lamps will remain on until the ignition key is turned from the OFF position, a keyless entry transmitter door lock command is received, or after an approximate 20 s delay through the theatre dimming feature.

Interior Lamps Dimming

This group includes lamps which may dim. This group may use a combination of vacuum fluorescent illumination, LEDs and incandescent lamps.

- HVAC control module, head assembly
- Rear HVAC control module, head assembly
- Radio
- Rear seat audio
- The instrument panel cluster
- The PRNDL lamp, with the exception of the current gear select position
- Power window switches
- Various switches

When the ignition switch is turned to the ON position, the vacuum fluorescent display, radio, turns ON at maximum brightness. When the park lamps are ON, all incandescent back lighting turn ON at the dimming level indicated by the instrument panel cluster dimmer switch. At the same time all fluorescent display displays dim to match the indicated dimming level. When the headlamp switch is placed in the PARK position, the park lamp supply voltage circuit provides an input to the BCM. The BCM then supplies voltage to the instrument panel cluster dimmer switch through the dimming control circuit. The setting of the instrument panel cluster dimmer switch determines the amount of voltage that the instrument panel cluster dimmer switch supplies to the BCM through the instrument panel cluster dimming lamps low reference circuit. The BCM then sends a PWM voltage to all the interior lamps. All the fluorescent display and incandescent back lighting lamps are provided a specific voltage and are then grounded. When the headlamp switch is turned to the park lamp or headlamp position, all incandescent back lighting turn ON at the dimming level indicated by the instrument panel cluster dimmer switch. When the instrument panel cluster dimmer switch is moved from minimum to maximum, all fluorescent display displays, as well as all incandescent back lighting respond from minimum intensity to maximum brightness in response to the instrument panel cluster dimmer switch.

Inadvertent Power

The BCM used in this vehicle controls the lighting system through circuits that enable the interior lamps. The BCM opens these enabling circuits shortly after the ignition switch is turned OFF with no lamp switch activity. If the ignition switch is turned to any position other than OFF, or if a lamp switch is activated during this period, the timer will reset itself.

&#169© Copyright Chevrolet. All rights reserved

Special Tools

Illustration	Tool Number/Description
	DT 6459-B DW240 090 Torque Wrench
	GE 604-D MKM 604-D Torx Bit and Socket Set

© Copyright Chevrolet. All rights reserved

Fastener Tightening Specifications

Application	Specification	
	Metric	English
Inside Rearview Mirror Set Screw	1.8 N·m	16 lb in
Outside Wing Mirror Nuts	10 N·m	89 lb in
Outside Wing Mirror Inner Actuator/Motor Screws	3 N·m	27 lb in

© Copyright Chevrolet. All rights reserved

Adhesives, Fluids, Lubricants, and Sealers

Application	Type of Material	GM Part Number
Inside Mirror Adhesive Kit	Adhesive	Refer to Electronic Parts Catalog

© Copyright Chevrolet. All rights reserved

Inside Rearview Mirror Schematics

Inside Rearview Mirror

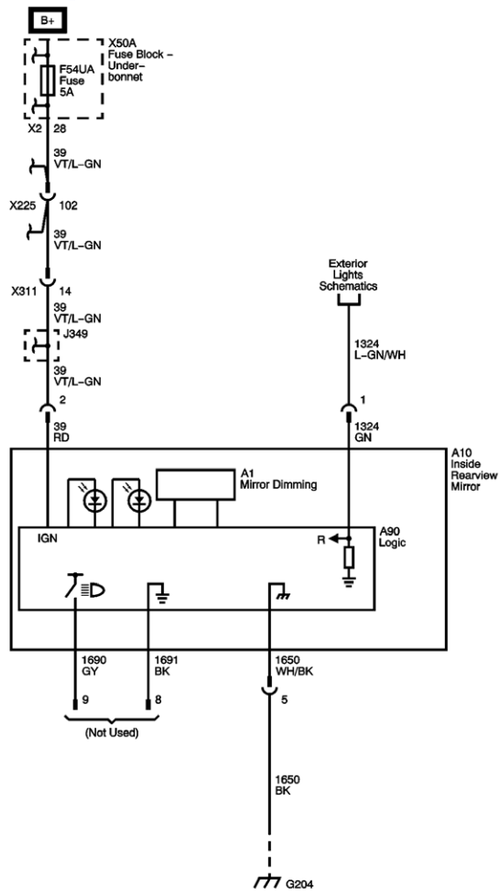

Master Electrical Component List

Automatic Day-Night Mirror Description and Operation

F32UA, F33UA, F50UA, F51UA, F52UA, F53UA and F54UA Fuses

Rear Indicators, Brake Lamps, Rear Fog Lamp and Reverse Lamp

G204

© Copyright Chevrolet. All rights reserved

Outside Wing Mirror Schematics

Figure 1: Directional Controls and Motors
Figure 2: Mirror Heaters

© Copyright Chevrolet. All rights reserved

Symptoms - Mirrors

Note: The following steps must be completed before using the symptom tables.

1. Perform the Diagnostic System Check - Vehicle before using the Symptom Tables in order to verify that all of the following are true:
   - There are no DTCs set.
   - The control modules can communicate via the serial data link.
2. Review the system operation in order to familiarise yourself with the system functions. Refer to the following system descriptions:
   - Outside Mirror Description and Operation
   - Automatic Day-Night Mirror Description and Operation

Visual/Physical Inspection

- Inspect for aftermarket devices which could affect the operation of the system. Refer to Checking Aftermarket Accessories .
- Inspect the easily accessible or visible system components for obvious damage or conditions which could cause the symptom.

Intermittent

Faulty electrical connections or wiring may be the cause of intermittent conditions. Refer to Testing for Intermittent Conditions and Poor Connections .

Symptom List

Refer to a symptom diagnostic procedure from the following list in order to diagnose the symptom:

- Heated Mirrors Malfunction
- Automatic Day-Night Mirrors Malfunction
- Power Mirror Folding Malfunction
- Power Mirror Malfunction

&#169© Copyright Chevrolet. All rights reserved

Heated Mirrors Malfunction

Diagnostic Instructions

- Perform the Diagnostic System Check - Vehicle prior to using this diagnostic procedure.
- Review Strategy Based Diagnosis for an overview of the diagnostic approach.
- Diagnostic Procedure Instructions provides an overview of each diagnostic category.

Diagnostic Fault Information

Circuit	Short to Ground	Open/High Resistance	Short to Voltage	Signal Performance
Heated Mirror Element Control	1	1	2	--
Ground	--	1	--	--
1. Heated Mirror Inoperative 2. Heated Mirror Always On				

Circuit/System Description

The rear demister relay supplies voltage to the outside wing mirror heater elements based on the current state of the rear window demister. The relay supplies B+ through the driver/passenger mirror heating element control circuit when a request is seen.

Reference Information

Schematic Reference

Outside Wing Mirror Schematics

Connector End View Reference

Component Connector End Views

Description and Operation

Outside Mirror Description and Operation

Electrical Information Reference

- Circuit Testing
- Connector Repairs
- Testing for Intermittent Conditions and Poor Connections
- Wiring Repairs

Scan Tool Reference

Control Module References for scan tool information.

Circuit/System Verification

1. Vehicle ON, press the rear window demister switch. Verify the rear window demister turns ON and the rear window becomes warm.
   If the rear window demister does not turn on, refer to Rear Window Demister Malfunction .
2. Verify both the left and right outside mirror glass become warm.

Circuit/System Testing

1. Vehicle OFF, disconnect the harness connector at the appropriate A9 outside wing mirror.
2. Wait 1 minute, test for less than 10 Ω between the appropriate ground circuit terminal and ground.
   - Driver outside wing mirror terminal D
   - Passenger outside wing mirror terminal E

   If greater than the specified range, test the ground circuit for an open/high resistance.
3. Connect a test lamp between the heater element control circuit terminal F and ground.
4. Vehicle ON, operate the rear window demister ON and OFF with the rear demister switch. The test lamp should turn ON and OFF when changing between the commanded states.
   If the test lamp is always ON, test the control circuit for a short to voltage.
   If the test lamp is always OFF, test the control circuit for a short to ground or an open/high resistance.
5. If all circuits test normal, test or replace the outside wing mirror glass.

Repair Instructions

Perform the Diagnostic Repair Verification after completing the diagnostic procedure.

Outside Wing Mirror Glass Replacement

&#169© Copyright Chevrolet. All rights reserved

Automatic Day-Night Mirrors Malfunction

Diagnostic Instructions

- Perform the Diagnostic System Check - Vehicle prior to using this diagnostic procedure.
- Review Strategy Based Diagnosis for an overview of the diagnostic approach
- Diagnostic Procedure Instructions provides an overview of each diagnostic category

Diagnostic Fault Information

Circuit	Short to Ground	Open/High Resistance	Short to Voltage	Signal Performance
Ignition	1	1	--	--
Reverse Lamp Control	1	1	1	--
Ground	--	1	--	--
1. Inside Electrochromic Mirror Malfunction				

Circuit/System Description

The inside rearview mirror uses 2 photocell sensors. One sensor is the rear light sensor, located on the face side of the mirror, facing the rear of the vehicle. The rear light sensor is used to determine light conditions present at the mirror face. The other sensor is the front light sensor, located on the backside of the mirror, facing the front of the vehicle. The front light sensor is used to determine the exterior light conditions at the front of the vehicle. With a low exterior light condition detected by the front light sensor and a high light condition from the rear light sensor, the inside rearview mirror will automatically darken the face of the inside rearview mirror.

With the gear selector lever in the REVERSE position, reverse lamp control voltage is supplied as an input to the inside rearview mirror. The mirror monitors this input to disable the automatic day-night feature. This allows the driver to see objects in the mirror clearly when backing up, regardless of the rear light sensor status.

Reference Information

Schematic Reference

Inside Rearview Mirror Schematics

Connector End View Reference

Component Connector End Views

Description and Operation

Automatic Day-Night Mirror Description and Operation

Electrical Information Reference

- Circuit Testing
- Connector Repairs
- Testing for Intermittent Conditions and Poor Connections
- Wiring Repairs

Scan Tool Reference

Control Module References for scan tool information

Circuit/System Verification

1. Vehicle in Service Mode, headlamps ON, vehicle in PARK, cover the front light sensor with a towel or other suitable item. Shine a torch at the rear light sensor while observing the inside rearview mirror face. The inside rearview mirror face should dim.
2. Vehicle ON, hand brake applied, place the transmission in REVERSE. The inside rearview mirror face should transition from dim to bright.

Circuit/System Testing

1. Vehicle OFF, disconnect the harness connector at the A10 inside rearview mirror.
2. Wait 1 minute, test for less than 10 Ω between the ground circuit terminal 5 and ground.
   If greater than the specified range, test the ground circuit for an open/high resistance.
3. Vehicle in Service Mode, verify that a test lamp illuminates between the ignition circuit terminal 2 and ground.
   If the test lamp does not illuminate test the ignition circuit for an open/high resistance or short to ground.
4. Vehicle ON, hand brake applied, vehicle in REVERSE, verify that a test lamp illuminates between the reverse lamp control circuit terminal 1 and ground.
   If the test lamp does not illuminate test the control circuit for an open/high resistance or short to ground. If the circuit tests normal, refer to Reverse Lamps Malfunction .
5. If all circuits test normal, test or replace the A10 inside rearview mirror.

Repair Instructions

Perform the Diagnostic Repair Verification after completing the diagnostic procedure.

Inside Rearview Mirror Replacement

&#169© Copyright Chevrolet. All rights reserved

Power Mirror Folding Malfunction

Diagnostic Instructions

- Perform the Diagnostic System Check - Vehicle prior to using this diagnostic procedure.
- Review Strategy Based Diagnosis for an overview of the diagnostic approach.
- Diagnostic Procedure Instructions provides an overview of each diagnostic category.

Diagnostic Fault Information

Circuit	Short to Ground	Open/High Resistance	Short to Voltage	Signal Performance
Folding Mirror Motor Retract Control	1	1	--	--
Folding Mirror Motor Extend Control	1	1	--	--
1. Power Folding Mirror Inoperative				

Circuit/System Description

The outside mirror switch controls the power folding or power extending functions of the outside wing mirrors. The folding mirror motors are controlled by using bi-directional motor controls through the folding mirror motor retract control circuit and the folding mirror motor extend control circuit.

Reference Information

Schematic Reference

Outside Wing Mirror Schematics

Connector End View Reference

Component Connector End Views

Description and Operation

Outside Mirror Description and Operation

Electrical Information Reference

- Circuit Testing
- Connector Repairs
- Testing for Intermittent Conditions and Poor Connections
- Wiring Repairs

Circuit/System Verification

Vehicle in Service Mode, operate the mirror switch to the fold and extend positions. The outside wing mirrors should fold and extend.

Circuit/System Testing

1. Vehicle OFF, disconnect the harness connector at the appropriate A9 outside wing mirror.
2. Connect a test lamp between control circuit terminal D and control circuit terminal E.
3. Operate the mirror switch to the fold and extend positions. The test lamp should turn ON for 1 second when commanding the fold and extend states.
   If the test lamp remains OFF during either of the commands, test for a short to voltage, short to ground, or an open/high resistance on either control circuit. If the circuits test normal, replace the S52 outside mirror switch.
4. If all circuits test normal, test or replace the A9 outside wing mirror.

Repair Instructions

Perform the Diagnostic Repair Verification after completing the diagnostic procedure.

- Outside Remote Control Wing Mirror Switch Replacement
- Outside Wing Mirror Replacement

&#169© Copyright Chevrolet. All rights reserved

Power Mirror Malfunction

Diagnostic Instructions

- Perform the Diagnostic System Check - Vehicle prior to using this diagnostic procedure.
- Review Strategy Based Diagnosis for an overview of the diagnostic approach.
- Diagnostic Procedure Instructions provides an overview of each diagnostic category.

Diagnostic Fault Information

Circuit	Short to Ground	Open/High Resistance	Short to Voltage	Signal Performance
Left/Right Mirror Motor Horizontal Control	1	1	--	--
Left/Right Mirror Motor Vertical Control	1	1	--	--
Left/Right Mirror Motor Common Control	1	1	--	--
1. Power Mirror Malfunction				

Circuit/System Description

The outside wing mirror switch controls the outside wing mirrors based on the position of the mirror selector switch and which movement position is selected. The outside wing mirror switch has four positions: up, down, left, and right. B+ is applied to the switch from the power mirror fuse and when a movement position switch is selected, voltage is sent to the commanded mirror via a mirror control circuit. The opposite mirror control circuit acts as a ground circuit for the bi-directional mirror motor. Ground is the applied through the switch.

Reference Information

Schematic Reference

Outside Wing Mirror Schematics

Connector End View Reference

Component Connector End Views

Description and Operation

Outside Mirror Description and Operation

Electrical Information Reference

- Circuit Testing
- Connector Repairs
- Testing for Intermittent Conditions and Poor Connections
- Wiring Repairs

Scan Tool Reference

Control Module References for scan tool information

Circuit/System Verification

1. Vehicle in Service Mode, with the mirror selector switch in the DRIVER position, command the mirrors UP, DOWN, LEFT, and RIGHT using the mirror directional switch. The A9A driver outside wing mirror should move in the commanded direction.
2. With the mirror selector switch in the PASSENGER position, command the mirrors UP, DOWN, LEFT, and RIGHT using the mirror directional switch. The A9B passenger outside wing mirror should move in the commanded direction.

Circuit/System Testing

1. Vehicle OFF, disconnect the harness connector at the S52 outside mirror switch.
2. Wait 1 minute, test for less than 10 Ω between the ground circuit terminal 11 and ground.
   If greater than the specified range, test the ground circuit for an open/high resistance.
3. Vehicle in Service Mode, verify that a test lamp illuminates between the B+ circuit terminal 12 and ground.
   If the test lamp does not illuminate, test the B+ circuit for a short to ground or an open/high resistance.
4. Vehicle OFF, connect the harness connector at the S52 outside mirror switch.
5. Disconnect the harness connector at the appropriate A9 outside rearview mirror.
6. Connect a test lamp between the control circuit terminal H and the control circuit terminal B.
7. Operate the vertical switch UP and DOWN. The test lamp should turn ON when commanding the UP and DOWN states.
   If the test lamp remains OFF during either of the commands, test for a short to voltage, short to ground, or an open/high resistance on the control circuits. If the circuits test normal, replace the S52 outside mirror switch.
8. Connect a test lamp between the control circuit terminal H and the control circuit terminal G.
9. Operate the horizontal switch LEFT and RIGHT. The test lamp should turn ON when commanding the LEFT and RIGHT states.
   If the test lamp remains OFF during either of the commands, test for a short to voltage, short to ground, or an open/high resistance on the control circuits. If the circuits test normal, replace the S52 outside mirror switch.

10. If all circuits test normal, test or replace the A9 outside wing mirror.

Repair Instructions

Perform the Diagnostic Repair Verification after completing the diagnostic procedure.

- Outside Wing Mirror Replacement
- Outside Remote Control Wing Mirror Switch Replacement

&#169© Copyright Chevrolet. All rights reserved

Outside Wing Mirror Applique Replacement

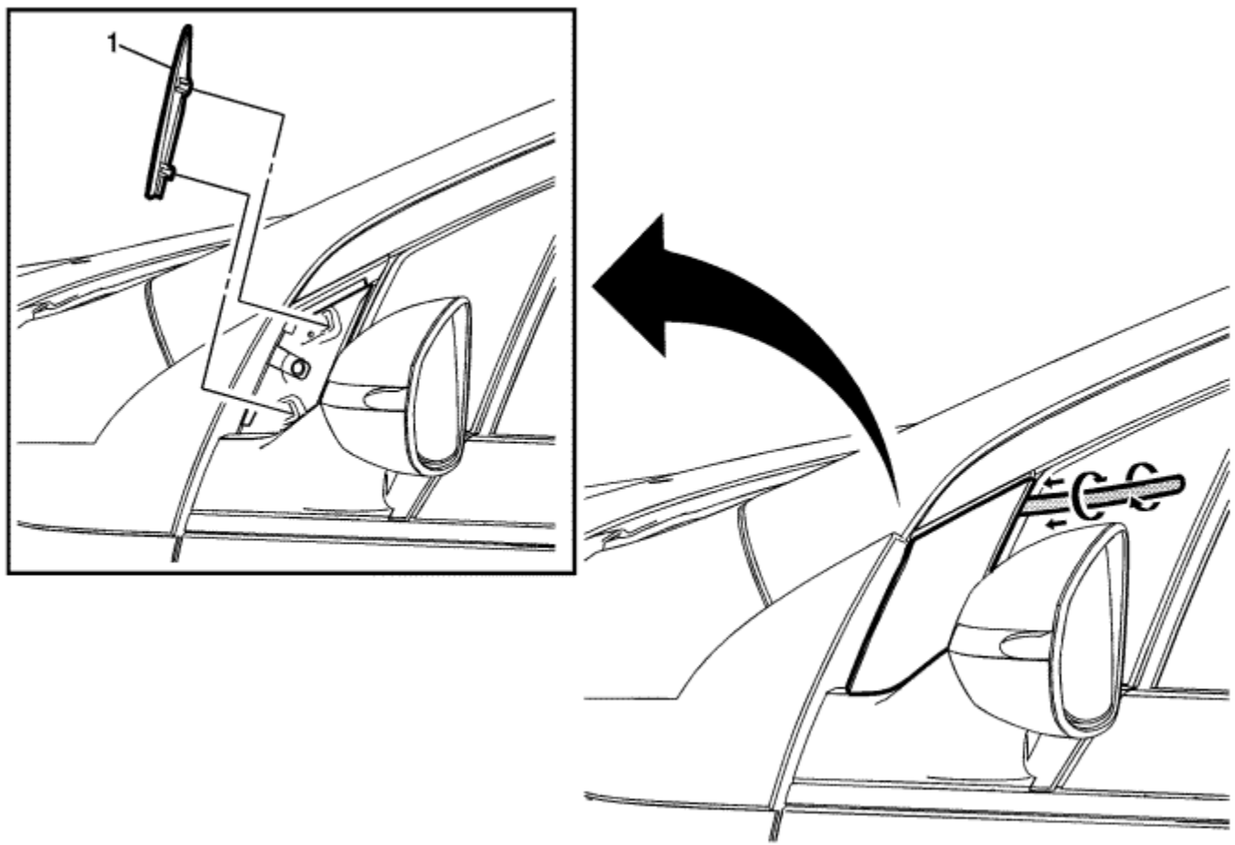

Callout	Component Name
1	Outside Wing Mirror Applique **Procedure** 1. It's necessary to remove the outside wing mirror, loosen the bolts to allow the mirror to move. Refer to Outside Rearview Mirror Replacement .

2. Insert a plastic tool between the door frame and the edge of the mirror applique.
3. Push inward, turn clockwise releasing the retaining clips from the door frame.
4. It may be necessary to remove the old retaining clips from the door frame.
5. When reinstalling the applique, set the bottom of the applique in first then rotate the part into place clipping the top first then the bottom.

© Copyright Chevrolet. All rights reserved

Outside Rearview Mirror Replacement

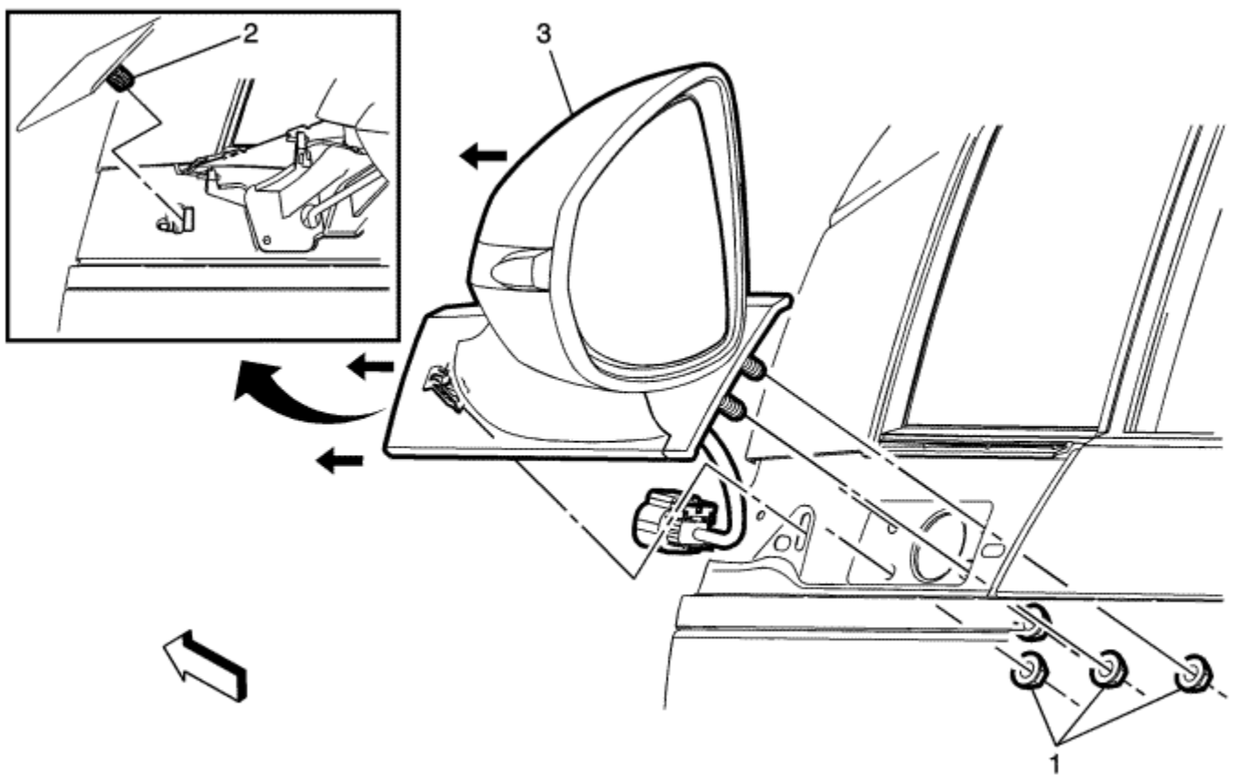

Callout	Component Name
Warning: Refer to Glass and Sheet Metal Handling Warning in the Preface section. **Preliminary Procedure** Remove the front side door trim panel. Refer to Front Side Door Trim Replacement .	

1	Outside Wing Mirror Nuts (Qty: 3) **Caution:** Refer to Fastener Caution in the Preface section. **Procedure** 1. Remove the water deflector cover at the top of the door panel to expose the nuts. 2. Disconnect the electrical connector. **Tighten** 10 N·m (89 lb in)
2	Outside Wing Mirror Front Lower Base Retainer **Procedure** When pulling the mirror assembly off the vehicle it Must be pulled straight forward to prevent the retainer from falling in the door. **Note:** If the retainer stay in the door when removing the mirror, remove and reinstall to the mirror base.
3	Outside Rearview Mirror **Tip** Inspect the outside wing mirror for proper operation before installing the door trim.

© Copyright Chevrolet. All rights reserved

Outside Wing Mirror Housing Cover Replacement

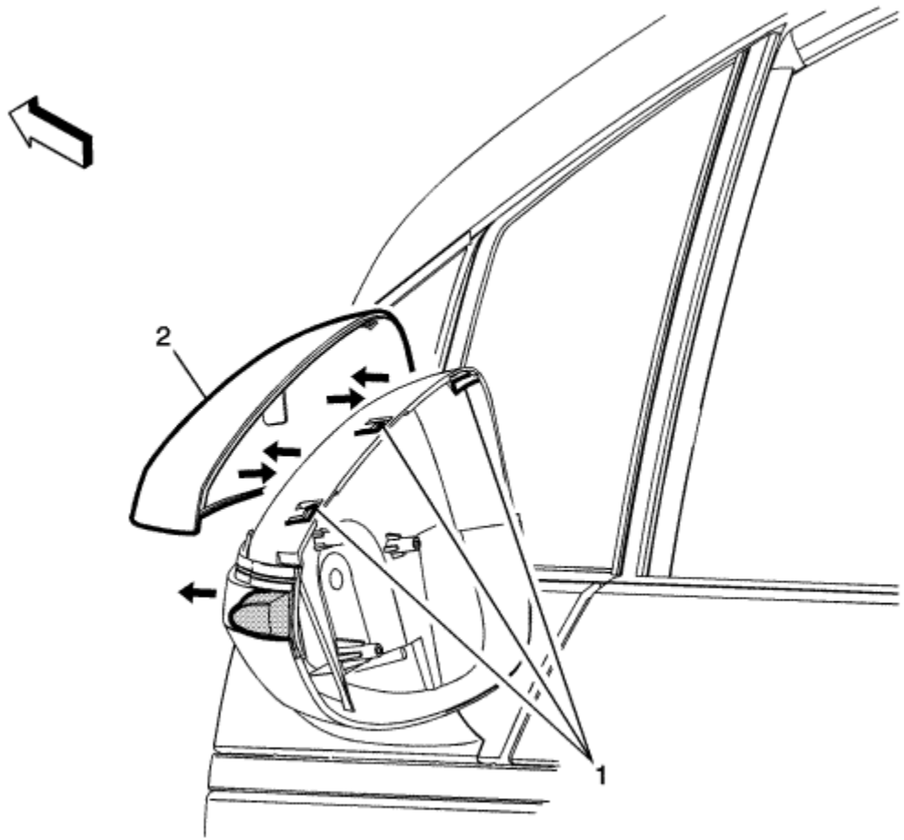

Callout	Component Name
Warning: Refer to Glass and Sheet Metal Handling Warning in the Preface section. **Preliminary Procedure** Remove the outside wing mirror housing bezel. Refer to Outside Wing Mirror Housing Bezel Replacement .	

1	Outside Wing Mirror Housing Cover Retainers (Qty: 3) **Procedure** 1. The housing cover has three molded retainers on the front edge that retains it to the housing. 2. Lift and slide the housing cover straight forward to release the retainers from the housing. **Note:** The housing cover fits in the edge of the turning signal house and it must slid forward to release completely.
2	Outside Wing Mirror Housing Cover **Procedure** 1. Reinstall the housing cover to the housing. 2. Inner actuator to housing, ensure proper operation. 3. Position the housing cover to the housing and indicator, push rearward until fully seated. 4. Place your hand on the back of the mirror housing. Using the flat part of your hand press inward until the mirror glass fully seats to the inner actuator retaining tabs. 5. Inspect the outside wing mirror for proper operation.

© Copyright Chevrolet. All rights reserved

Outside Wing Mirror Housing Bezel Replacement

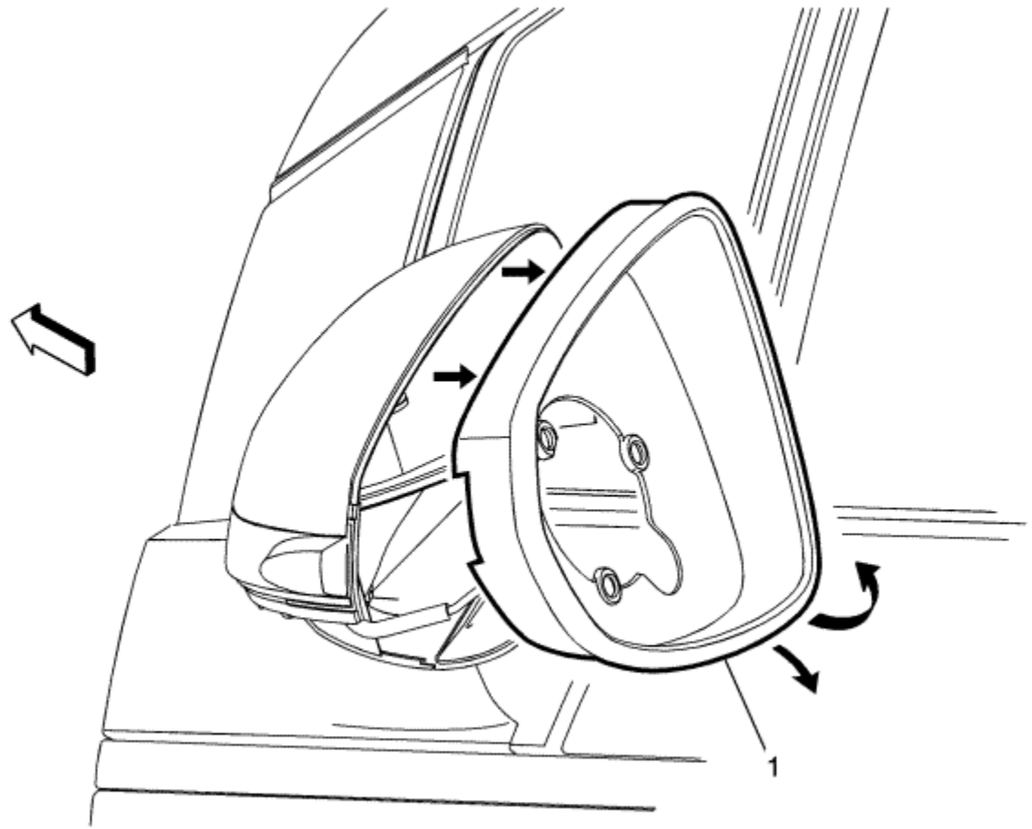

Callout	Component Name
Warning: Refer to Glass and Sheet Metal Handling Warning in the Preface section. **Preliminary Procedure** Remove the outside rearview mirror inner actuator. Refer to Outside Rearview Mirror Inner Actuator Replacement .	

1	Outside Wing Mirror Housing Bezel **Procedure** Inspect the outside wing mirror inner actuator for proper operation before installing the mirror glass. **Note:** When removing the housing bezel it Must be pulled up and turn from the lower inside corner only to release.

© Copyright Chevrolet. All rights reserved

Outside Remote Control Wing Mirror Switch Replacement

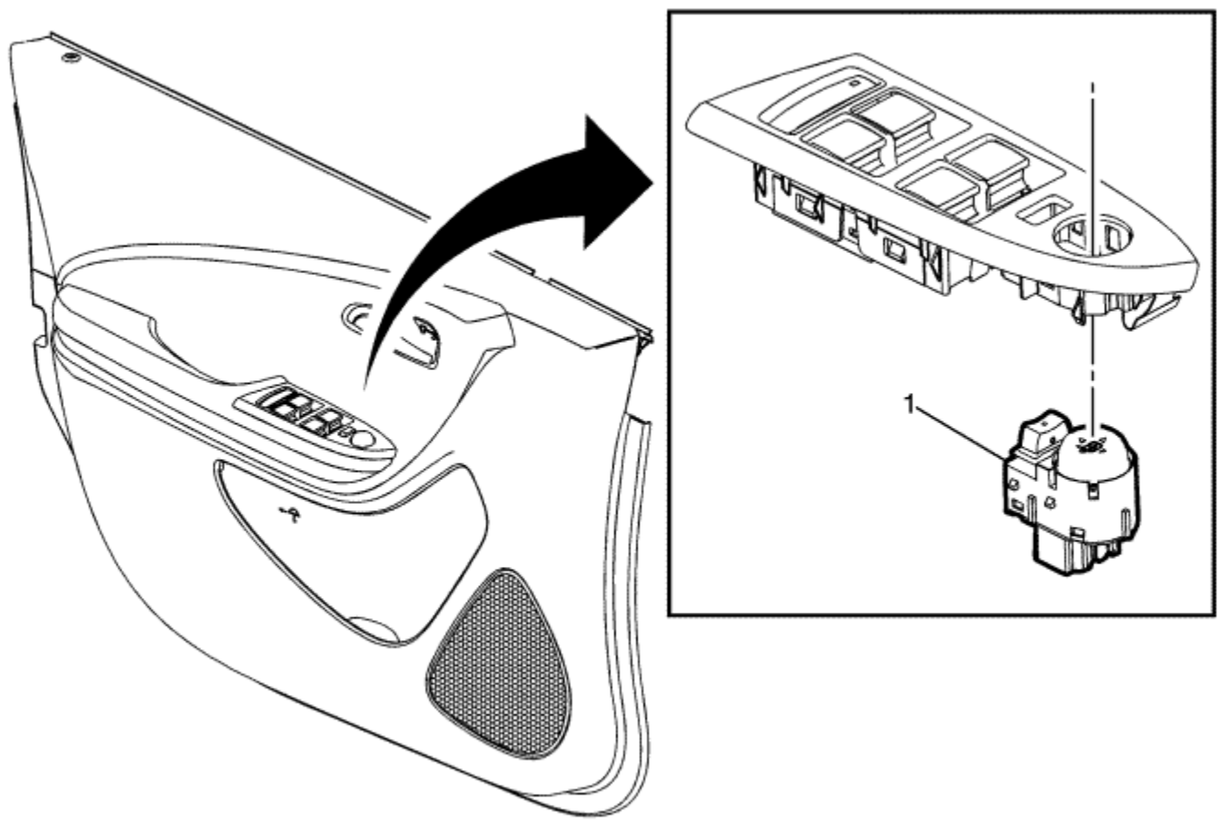

Callout	Component Name
Preliminary Procedure Remove the drivers side door accessory switch mount plate. Refer to Front Side Door Accessory Switch Mount Plate Replacement : Passenger Side Door → Drivers Side Door .	
	Outside Remote Control Wing Mirror Switch Assembly

1	**Procedure** Disconnect the electrical connector.

© Copyright Chevrolet. All rights reserved

Outside Rearview Mirror Inner Actuator Replacement

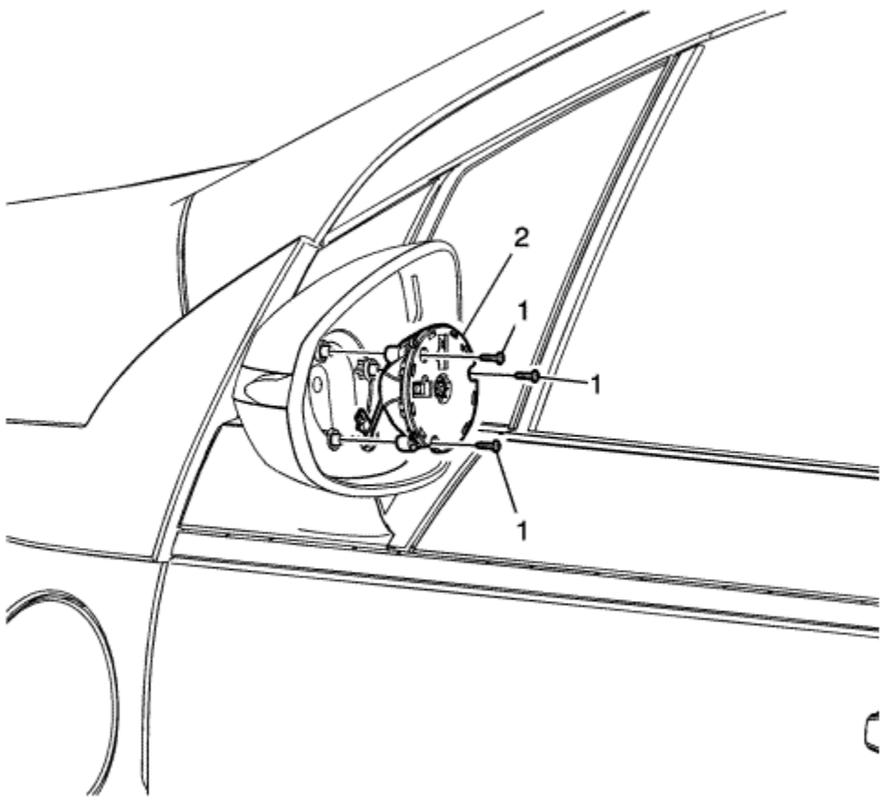

Callout	Component Name
Warning: Refer to Glass and Sheet Metal Handling Warning in the Preface section. **Preliminary Procedure** Remove the outside rearview mirror glass. Refer to Outside Rearview Mirror Glass Replacement .	

1	Outside Wing Mirror Inner Actuator Screws (Qty: 3) **Caution:** Refer to Fastener Caution in the Preface section. **Procedure** Disconnect the electrical connector. **Tighten** 3 N·m (27 lb in)
2	Outside Rearview Mirror Inner Actuator **Procedure** Inspect the outside wing mirror inner actuator for proper operation before installing the mirror glass.

© Copyright Chevrolet. All rights reserved

Outside Rearview Mirror Glass Replacement

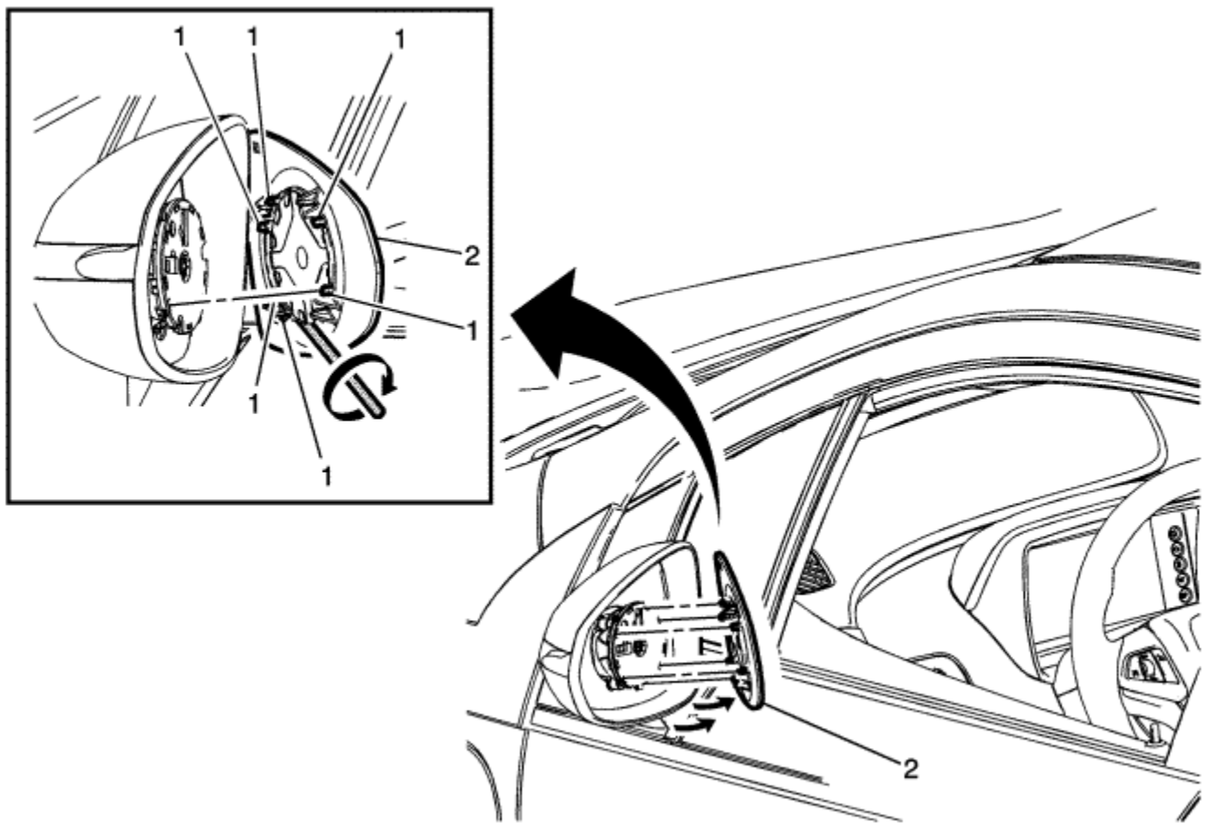

Callout	Component Name
	Outside Wing Mirror Glass Retainers (Qty :6) **Warning:** Refer to Glass and Sheet Metal Handling Warning in the Preface section. **Procedure**

1	1. Apply several layers of masking tape to the bottom and inner edge of the outside wing mirror housing in order to protect the painted finish. 2. DO Not use the tool (flat plastic) to pry with, it Must be used in a twisting motion counter clockwise only to release the mirror glass from the inner actuator. 3. Retain pressure on the top inner corner of the mirror glass (2). 4. Insert a suitable tool (flat plastic) between the two tabs (1) located behind the glass. 5. Twist the suitable tool (flat plastic) until the mirror glass releases from the inner actuator. 6. Disconnect electrical connectors from mirror glass.
2	Outside Rearview Mirror Glass **Procedure** 1. Align the mirror glass retaining tabs with the inner actuator. 2. Place your hand on the back of the mirror housing. 3. Using the flat part of your hand press inward on the mirror glass until the tabs are fully seated on the inner actuator retainers. 4. Inspect the outside wing mirror for proper operation before installing the door trim.

© Copyright Chevrolet. All rights reserved

Inside Rearview Mirror Replacement

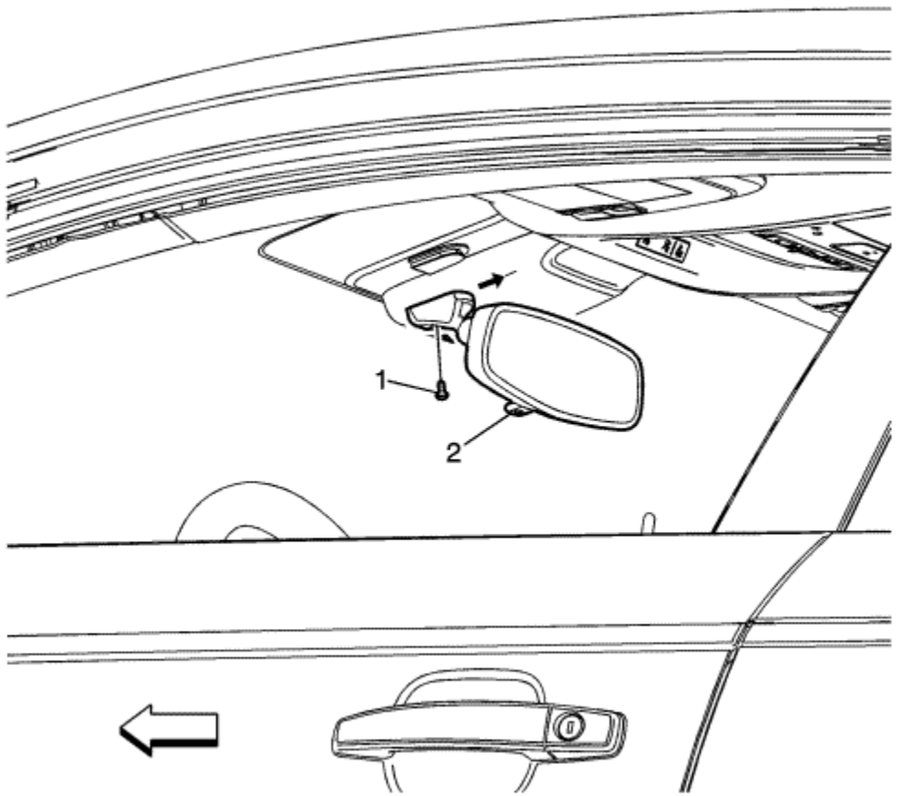

Callout	Component Name
	Inside Rearview Mirror Set Screw **Caution:** Refer to Fastener Caution in the Preface section. **Procedure**

1	1. Adjust the mirror to the full upward position. 2. Loosen the set screw located at the base of the mirror. 3. Slide the mirror upward off of the rearview mirror button. **Tighten** 1.8 N·m (16 lb in)
2	Inside Rearview Mirror

© Copyright Chevrolet. All rights reserved

Inside Rearview Mirror Bracket Installation

Note: If the windscreen is equipped with a black out area where the inside rearview mirror is located this procedure does not apply. If the black out area is damaged, replace the windscreen.

1. Determine the location of the mirror mounting base by marking the outside of the windscreen with a marking pencil where the base was previously located. If it is not clear where the base was mounted, use the following steps to determine where the base should be installed:

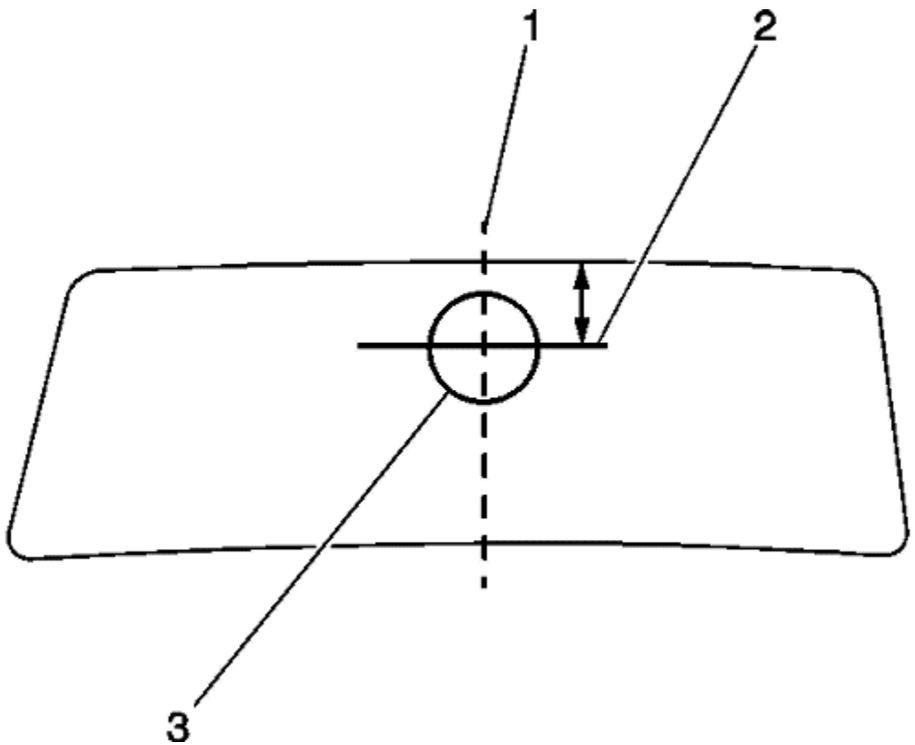

1.1. Using a measuring tape, measure the distance between the windscreen pillars from the base of the shade line.
1.2. Using a marking pencil, halfway between the windscreen pillars, draw a centre line (1) on the windscreen from the roof panel to the windscreen base.
1.3. Draw a perpendicular line intersecting the centre line (2) at that location.

The top center of the mirror mounting base will be at the intersection of these lines.

2. Scrape the inside windscreen glass thoroughly with a safety razor or utility knife in order to remove all old adhesive.
3. If reinstalling the original mounting base, place the mirror mounting base in a suitable holding device, such as a vice.
4. Scrape the mirror mounting base thoroughly with a safety razor or utility knife in order to remove all old adhesive.
5. Clean the inside windscreen glass and the mounting surface of the mirror mounting base thoroughly with a clean cloth saturated with naphtha or a 50/50 mixture (by volume) of clean water and isopropyl alcohol.

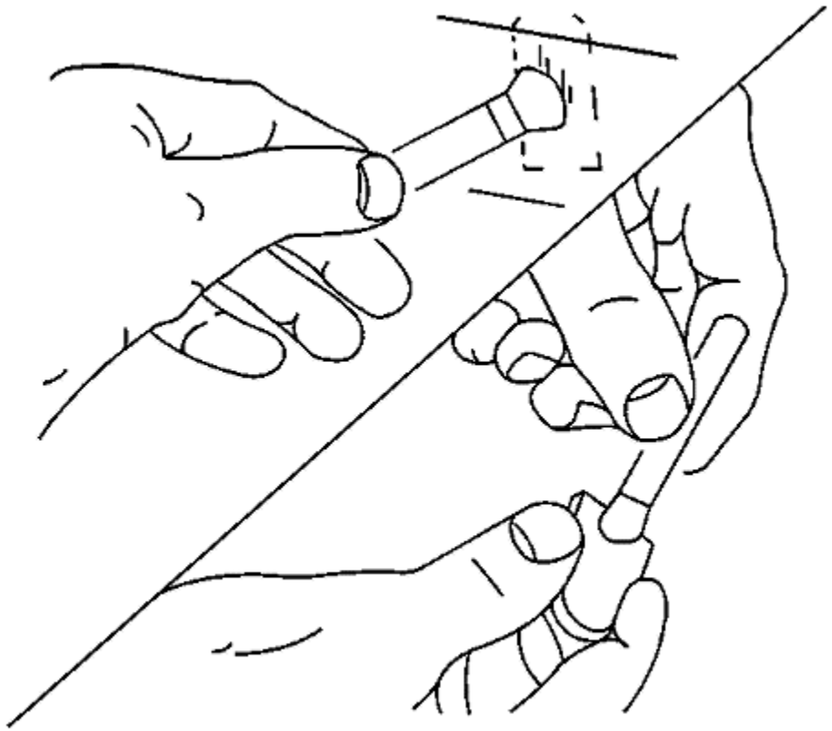

6. Using the Inside Mirror Adhesive Kit, or equivalent to apply a small amount of activator to the mounting surface of the mirror mounting base. Refer to Adhesives, Fluids, Lubricants, and Sealers for the recommended adhesive.
7. Apply a small amount of activator to the windscreen where the mounting base is to be installed.
8. Allow the activator to dry 5 minutes.

   Note: Do not touch the mounting surface of the mirror mounting base or the glass.

9. Apply 1 drop of adhesive to the centre of the mirror mounting base.

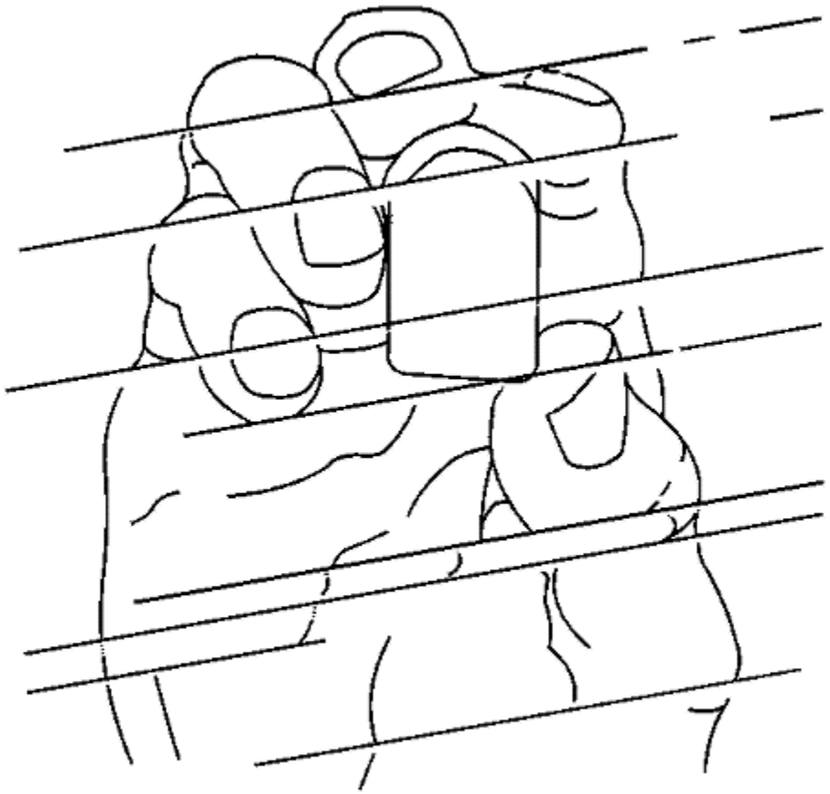

10. Immediately apply the mounting base to the windscreen, ensuring that the mounting base aligns correctly to the marks made on the outside of the windscreen.
11. Hold the mounting base firmly in place for 1 minute.
12. Allow the adhesive to set for 15 minutes.
13. Install the mirror to the mirror mounting base and fasten, if necessary.
14. Connect the electrical connector and install the wire cover, if equipped.

© Copyright Chevrolet. All rights reserved

Automatic Day-Night Mirror Description and Operation

Inside Rearview Mirror with the Automatic Day-Night Feature System Operation

The inside rearview mirror uses 2 photocell sensors. One sensor is the headlamp sensor, located on the face side of the mirror. The headlamp sensor is used to determine light conditions present at the mirror face. The other sensor is the ambient light sensor, located on the rear of the mirror or windscreen side. The ambient light sensor is used to determine the exterior light conditions. With a low exterior light condition detected, and a high light condition from behind of the car, at the headlamp sensor, the inside rearview mirror will automatically darken the face of the mirror.

In the daytime, the mirror is in a normal state because of the high exterior light condition that is indicated by the ambient light sensor. With the gear selector lever in the REVERSE position, reverse lamp supply voltage is supplied as an input to the inside rearview mirror. The mirror monitors this input to disable the automatic day-night feature. This allows the driver to see objects in the mirror clearly when backing up, even during the night.

© Copyright Chevrolet. All rights reserved

Outside Mirror Description and Operation

Power Mirror System Components

The power mirror system consists of the following components:

- Outside rearview mirror switch
- Mirror selector switch
- Driver outside rearview mirror
- Passenger outside rearview mirror

Each of the outside rearview mirror contains two motors. The vertical motor operates the mirror in the up and down directions, and the horizontal motor operates the mirror in the left and right directions.

Power Mirror System Controls

The outside rearview mirror switch is a four position directional switch: Up, Down, Left and Right.

The mirror select switch is a three position switch: left, neutral/fold, and right.

Power Mirror System Operation

The outside wing mirror switch receives battery voltage from the under-bonnet fuse block The power mirror switch also receives a constant ground.

The four positions of the direction switch have dual switch contacts. Each of the contacts are connected to opposing sides of the appropriate power mirror motors through the selector switch. The selector switch completes these circuits depending on the position of the selector switch, L or R.

If the selector switch is placed in the L position and the up switch is pressed, battery voltage will be supplied to the left outside wing mirror vertical motor through the left mirror motor vertical control circuit and ground through the left mirror motor common control circuit. If the down switch is pressed, battery voltage will be supplied to the left outside wing mirror vertical motor through the left mirror motor common control circuit and ground through the left mirror motor vertical control circuit.

The remainder of the mirror functions operate in the same manner as described above. Placing the power mirror switch in opposing positions, left/right or up/down, will reverse the polarity to the mirror motor, reversing the direction of movement.

Heated Mirrors (If Equipped)

The heated mirrors are controlled through the rear demist relay. Whenever the rear window demister is turned on battery voltage is supplied to the mirror heater elements through the left and right mirror heater element control circuits.

&#169© Copyright Chevrolet. All rights reserved

Fastener Tightening Specifications

Application	Specification	
	Metric	English
Front Side Door Inside Door Handle Screw	3 N·m	27 lb in
Front Side Door Lock Cylinder Clamp Screw	5 N·m	44 lb in
Front Side Door Lock Screws	10 N·m	89 lb in
Front Side Door Outside Handle Bracket Screw	10 N·m	89 lb in
Front Side Door Striker Screws	22 N·m	16 lb ft
Tailgate Latch Bolts	10 N·m	89 lb in
Tailgate Latch Striker Bolts	25 N·m	18 lb ft
Tailgate Release Switch Screws	10 N·m	89 lb in
Rear Side Door Inside Door Handle Screw	3 N·m	27 lb in
Rear Side Door Lock Cylinder Clamp Screw	5 N·m	44 lb in
Rear Side Door Lock Screws	10 N·m	89 lb in
Rear Side Door Outside Handle Bracket Screw	10 N·m	89 lb in
Rear Side Door Striker Screws	22 N·m	16 lb ft

© Copyright Chevrolet. All rights reserved

Door Lock/Indicator Schematics

Figure 1: Door Locks
Figure 2: Door Handle Switches
Figure 3: Door Ajar Switches

© Copyright Chevrolet. All rights reserved

Release Systems Schematics - Release System Schematics

Fuel Door

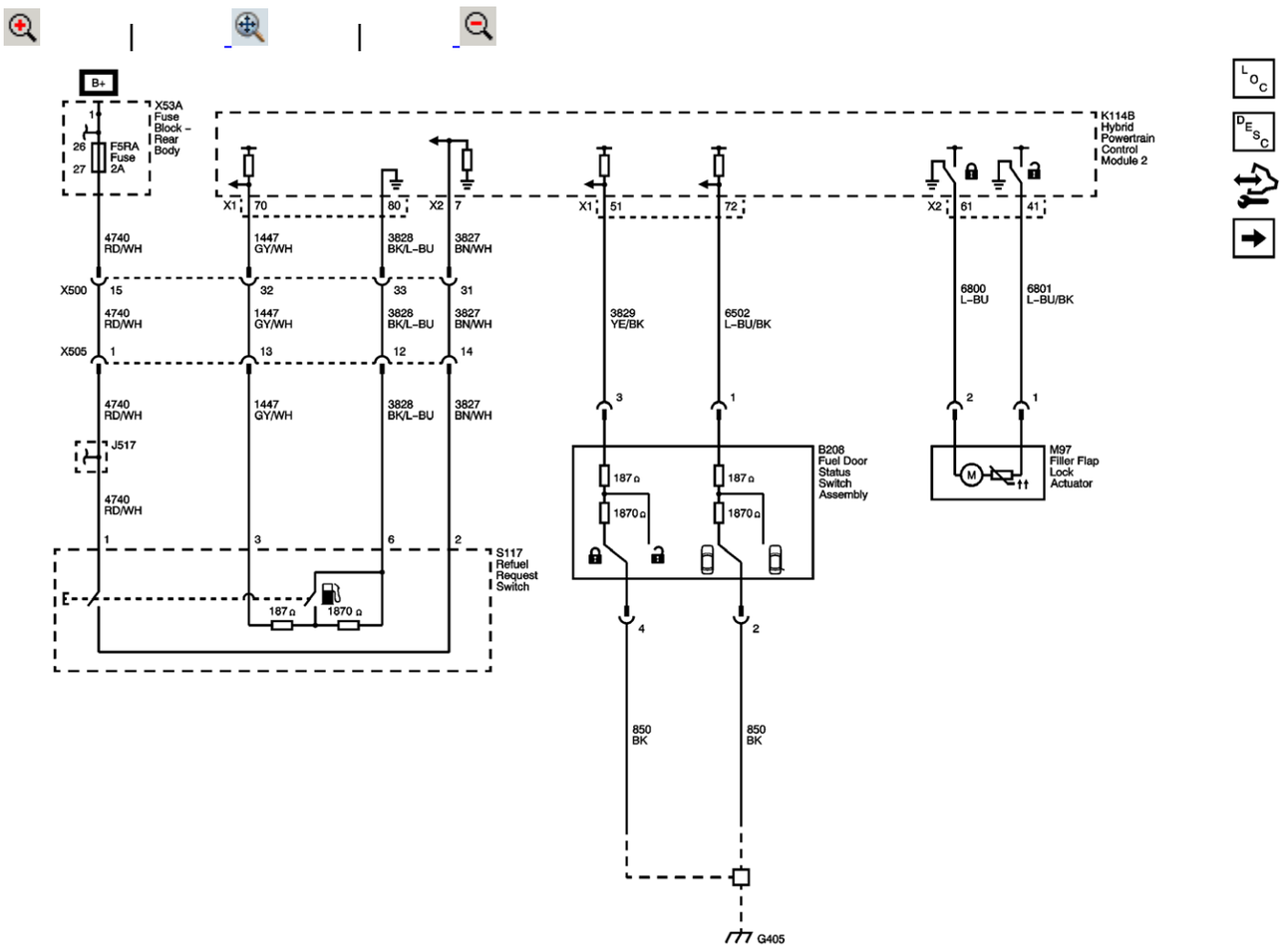

Master Electrical Component List

Fuel Fill Door Description and Operation

F2RA, F3RA, F4RA, F5RA, F7RA, F8RA, F10RA, F12RA and F13RA Fuses

G405

© Copyright Chevrolet. All rights reserved

Release Systems Schematics - Tailgate Schematics

Tailgate Release

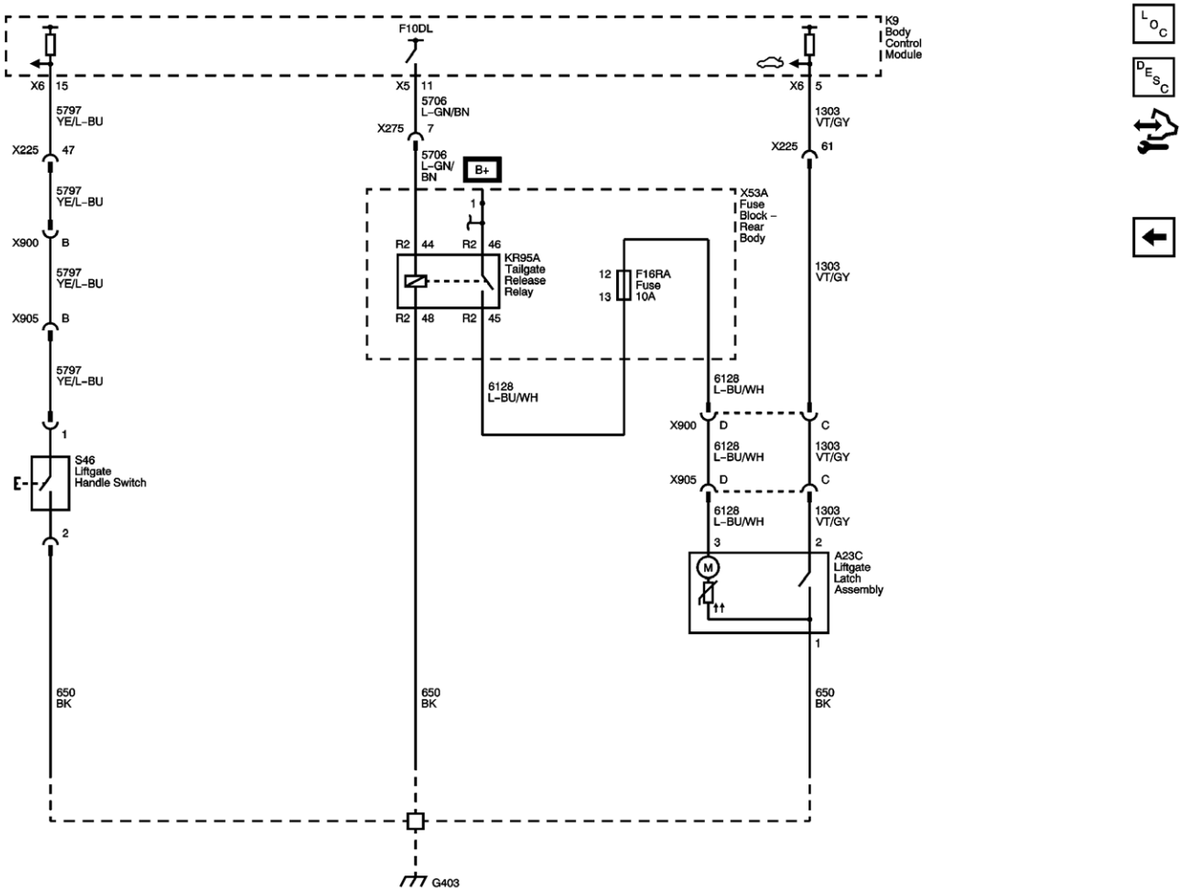

Master Electrical Component List

Rear Hatch/Gate Description and Operation

F1DL, F2DL, F3DL, F4DL, F5DL, F6DL, F7DL, F10DL, F11DL and F15DL Fuses

F6RA, F11RA, F14RA and F16RA Fuses

G403

© Copyright Chevrolet. All rights reserved

DTC B2500

Diagnostic Instructions

- Perform the Diagnostic System Check - Vehicle prior to using this diagnostic procedure.
- Review Strategy Based Diagnosis for an overview of the diagnostic approach.
- Diagnostic Procedure Instructions provides an overview of each diagnostic category.

DTC Descriptor

DTC B2500 00: Driver Exterior Unlock Switch Circuit

Diagnostic Fault Information

Circuit	Short to Ground	Open/High Resistance	Short to Voltage	Signal Performance
Driver Door Key Switch Signal	B2500 00	1	1	--
Driver Door Latch Ground	--	1	--	--
1. Key Cylinder Switch Inoperative				

Circuit/System Description

The driver window switch monitors the voltage level of the key switch unlock signal circuit. When the key is inserted into the driver door key cylinder and turned to the Unlock position, a switch within the driver door latch closes causing the voltage to drop within the key switch unlock signal circuit. The driver window switch will detect the drop in voltage and will send a serial data message to the BCM commanding all the doors to unlock.

Conditions for Running the DTC

The system voltage is 9-16 V

Conditions for Setting the DTC

The BCM detects a short to ground on the driver door key switch signal circuit.

Action Taken When the DTC Sets

The BCM will ignore the unlock command from the key cylinder switch.

Conditions for Clearing the DTC

- This DTC will be current for as long as the fault is present
- When the fault is no longer present, the DTC will be a history DTC
- A history DTC will clear after 50 ignition cycles

Reference Information

Schematic Reference

Door Lock/Indicator Schematics

Connector End View Reference

Component Connector End Views

Description and Operation

Power Door Locks Description and Operation

Electrical Information Reference

- Circuit Testing
- Connector Repairs
- Testing for Intermittent Conditions and Poor Connections
- Wiring Repairs

Scan Tool Reference

Control Module References for scan tool information

Circuit/System Verification

Insert the key into the driver door lock cylinder, turn the key to the unlock position while observing the scan tool BCM Driver Door Key Unlock Switch parameter, the value

should change from Inactive to Active.

Circuit/System Testing

1. Vehicle OFF, disconnect the harness connector at the A23D door latch assembly-driver.
2. Vehicle in Service Mode, verify the scan tool Driver Door Key Unlock Switch parameter is Inactive.
   If not the specified value, test the signal circuit terminal 9 for a short to ground. If the circuits test normal, replace the S79D window switch - driver.
3. If all circuits tests normal, test or replace the A23D door latch assembly-driver.

Component Testing

1. Vehicle OFF, disconnect the harness connector at the A23D door latch assembly-driver.
2. Test for infinite resistance between terminal 8 and terminal 9 with the switch in the open position.
   If not the specified value, replace the A23D door latch assembly-driver.
3. Test for less than 2 Ω between terminal 8 and terminal 9 with the switch in the unlock position.
   If greater than the specified range, replace the A23D door latch assembly-driver.

Repair Instructions

Perform the Diagnostic Repair Verification after completing the diagnostic procedure.

- Front Side Door Window and Multifunction Switch Replacement
- Front Side Door Lock Replacement

&#169© Copyright Chevrolet. All rights reserved

DTC B3125, B3130, or B3135

Diagnostic Instructions

- Perform the Diagnostic System Check - Vehicle prior to using this diagnostic procedure.
- Review Strategy Based Diagnosis for an overview of the diagnostic approach.
- Diagnostic Procedure Instructions provides an overview of each diagnostic category.

DTC Descriptors

DTC B3125 02: Driver Door Only Unlock Circuit Short to Ground

DTC B3125 04: Driver Door Only Unlock Circuit Open

DTC B3130 02: All Doors Unlock Circuit Short to Ground

DTC B3130 04: All Doors Unlock Circuit Open

DTC B3135 02: All Doors Lock Circuit Short to Ground

DTC B3135 04: All Doors Lock Circuit Open

Diagnostic Fault Information

Circuit	Short to Ground	Open/High Resistance	Short to Voltage	Signal Performance
BCM B+	B3125 02, B3130 02, B3135 02	B3125 02, B3130 02, B3135 02	--	--
Door Lock Actuator Lock Control 2	B3125 02, B3130 02, B3135 02	B3125 04, B3130 04, B3135 04	1	--
Door Lock Actuator Lock Control	B3125 02, B3130 02, B3135 02	B3125 04, B3130 04, B3135 04	1	--
Door Lock Actuator Unlock Control	B3125 02, B3130 02, B3135 02	B3125 04, B3130 04, B3135 04	1	--
1. All Door Latches Inoperative				

Circuit/System Description

The body control module (BCM) controls the door lock, passenger door unlock and driver door unlock circuits. Voltage is applied to the appropriate circuit when the BCM detects a door lock/unlock switch activation or a keyless entry lock or unlock command.

Conditions for Running the DTC

The system voltage is 9-16 V.

Conditions for Setting the DTC

B3125 02, B3130 02, B3135 02

The BCM detects a short to ground on a door latch control circuit.

B3125 04, B3130 04, B3135 04

The BCM detects an open/high resistance on a door latch control circuit

Action Taken When the DTC Sets

All the power door locks will be inoperative.

Conditions for Clearing the DTC

- This DTC will be current for as long as the fault is present.
- When the fault is no longer present, the DTC will be a history DTC.
- A history DTC will clear after 50 ignition cycles.

Reference Information

Schematic Reference

Door Lock/Indicator Schematics

Connector End View Reference

Component Connector End Views

Description and Operation

Power Door Locks Description and Operation

Electrical Information Reference

- Circuit Testing
- Connector Repairs
- Testing for Intermittent Conditions and Poor Connections
- Wiring Repairs

Scan Tool Reference

Control Module References for scan tool information

Circuit/System Verification

Command the door latches to LOCK and UNLOCK with a scan tool. Observe the operation of the door latches, each door should LOCK and UNLOCK when changing between the commanded states.

Circuit/System Testing

1. Vehicle OFF, disconnect the X2 harness connector at the K9 BCM.
2. Vehicle in Service Mode, verify that a test lamp illuminates between the B+ circuit terminal 4 and ground.
   If the test lamp does not illuminate, test the B+ circuit for a short to ground or an open/high resistance
3. Vehicle OFF, disconnect the X6 harness connector at the K9 BCM.
4. Disconnect the X1 harness connector at the X50A fuse block-under-bonnet.
5. Test for infinite resistance between the control circuit listed below and ground:
   - Connector X1, terminal 11 at the X50A fuse block-under-bonnet
   - Connector X1, terminal 12 at the X50A fuse block-under-bonnet
   - Connector X6 terminal 1 at the K9 BCM
   - Connector X6 terminal 4 at the K9 BCM

   If not the specified value, test the appropriate control circuit for a short to ground. If the circuit tests normal, test or replace the appropriate A23 door latch assembly.
6. Connect the X1 harness connector at the X50A fuse block-under-bonnet.
7. Test for infinite resistance between the control circuit terminal 2 X6 at the K9 BCM and ground.
   If not the specified value, test the control circuit for a short to ground. If the circuit tests normal, replace the X50A fuse block-under-bonnet.
8. If all circuits test normal, replace the K9 BCM.

Component Testing

1. Vehicle OFF, disconnect the harness connector at the appropriate A23 door latch assembly.
2. Install a 25 A fused jumper wire between one of the control terminals and 12 V. Momentarily install a jumper wire between the other control terminal and ground. Reverse the jumper wires at least two times, the A23 door latch assembly should perform the LOCK and UNLOCK functions.
   If it does not perform as specified, replace the A23 door latch assembly.

Repair Instructions

Perform the Diagnostic Repair Verification after completing the diagnostic procedure.

- Front Side Door Lock Replacement
- Rear Side Door Lock Replacement
- Fuse Block Replacement
- Control Module References for BCM replacement, programming and setup

&#169© Copyright Chevrolet. All rights reserved

DTC B3140 or B3150

Diagnostic Instructions

- Perform the Diagnostic System Check - Vehicle prior to using this diagnostic procedure.
- Review Strategy Based Diagnosis for an overview of the diagnostic approach.
- Diagnostic Procedure Instructions provides an overview of each diagnostic category.

DTC Descriptors

DTC B3140 00: Driver Door Unlock Switch Circuit

DTC B3150 00: Left Front Door Lock Switch Circuit

Diagnostic Fault Information

Circuit	Short to Ground	Open/High Resistance	Short to Voltage	Signal Performance
Driver Door Lock Switch Lock Signal	B3150 00	1	1	--
Driver Door Lock Switch Unlock Signal	B3140 00	2	2	--
Driver Door Lock Switch Ground	--	3	--	--
1. Door Lock Switch Lock Function Inoperative 2. Door Lock Switch Unlock Function Inoperative 3. Door Lock Switch Lock and Unlock Functions Inoperative				

Circuit/System Description

The body control module (BCM) monitors the voltage level of the door lock and door unlock signal circuits. When the central door lock switch is in the open position, the voltage level in the signal circuit will be near 12 V. When the central door lock switch is pressed to the lock or unlock position, the voltage level in the appropriate signal circuit will drop to 0 V and the BCM will detect the voltage drop and command the door latches to perform the requested lock or unlock command.

Conditions for Running the DTC

The system voltage is 9-16 V.

Conditions for Setting the DTC

B3140 00

The BCM detects short to ground in the unlock signal circuit for greater than 60 seconds.

B3150 00

The BCM detects a short to ground in the lock signal circuit for greater than 60 seconds.

Action Taken When the DTC Sets

B3140 00

The BCM will ignore the unlock signal and the doors will not unlock when using the central door lock switch.

B3150 00

The BCM will ignore the lock signal and the doors will not lock when using the central door lock switch.

Conditions for Clearing the DTC

- The DTC will be current for as long as the fault is present.
- When the fault is no longer present, the DTC will be a history DTC.
- A history DTC will clear after 50 ignition cycles.

Reference Information

Schematic Reference

Door Lock/Indicator Schematics

Connector End View Reference

Component Connector End Views

Description and Operation

Power Door Locks Description and Operation

Electrical Information Reference

- Circuit Testing
- Connector Repairs
- Testing for Intermittent Conditions and Poor Connections
- Wiring Repairs

Scan Tool Reference

Control Module References for scan tool information

Circuit/System Verification

Vehicle in Service Mode, observe the scan tool BCM Central Door Lock Switch on Console parameter. The reading should be Inactive and change to Lock and Unlock when pushing the appropriate switch on the central door lock switch.

Circuit/System Testing

1. Vehicle OFF, disconnect the harness connector at the A20 radio/HVAC control.
2. Test for less than 10 Ω between the ground circuit terminal 17 and ground.
   If greater than the specified range, test the ground circuit for an open/high resistance.
3. Vehicle in Service Mode, verify the scan tool Central Door Lock Switch on Centre Console parameter is Inactive.
   If the value is Lock , test the signal circuit terminal 12 for a short to ground. If the circuit tests normal, replace the K9 BCM.
   If the value is Unlock , test the signal circuit terminal 13 for a short to ground. If the circuit tests normal, replace the K9 BCM.
4. Install a 3 A fused jumper wire between the signal circuit terminal 12 and ground. Verify the scan tool Central Door Lock Switch on Center Console parameter is Lock.
   If not the specified value, test the signal circuit for a short to voltage or an open/high resistance. If the circuit tests normal, replace the K9 BCM.
5. Install a 3 A fused jumper wire between the signal circuit terminal 13 and ground. Verify the scan tool Central Door Lock Switch on Centre Console parameter is Unlock.
   If not the specified value, test the signal circuit for a short to voltage or an open/high resistance. If the circuit tests normal, replace the K9 BCM.
6. If all circuits test normal, test or replace the A20 radio/HVAC control.

Component Testing

1. Vehicle OFF, disconnect the harness connector at the A20 radio/HVAC control.
2. Test for infinite resistance between the signal terminal 13 and the ground terminal 17 with the switch in the open position.

If not the specified value, replace the A20 radio/HVAC control.

3. Test for infinite resistance between the signal terminal 12 and the ground terminal 17 with the switch in the open position.
   If not the specified value, replace the A20 radio/HVAC control.
4. Test for less than 2 Ω between the signal terminal 12 and the ground terminal 17 with the switch in the lock position.
   If greater than the specified range, replace the A20 radio/HVAC control.
5. Test for less than 2 Ω between the signal terminal 13 and the ground terminal 17 with the switch in the unlock position.
   If greater than the specified range, replace the A20 radio/HVAC control.

Repair Instructions

Perform the Diagnostic Repair Verification after completing the diagnostic procedure.

- Radio Control Assembly Replacement
- Control Module References for BCM replacement, programming and setup

&#169© Copyright Chevrolet. All rights reserved

DTC B3265

Diagnostic Instructions

- Perform the Diagnostic System Check - Vehicle prior to using this diagnostic procedure.
- Review Strategy Based Diagnosis for an overview of the diagnostic approach.
- Diagnostic Procedure Instructions provides an overview of each diagnostic category.

DTC Descriptor

DTC B3265 02: Boot Lid Unlatch Output Circuit Short to Ground

Diagnostic Fault Information

Circuit	Short to Ground	Open/High Resistance	Short to Voltage	Signal Performance
Tailboard Latch Relay Control	B3265 02	1	1	--
Tailgate Release Relay Ground	--	1	--	--
1. Rear Hatch Release Malfunction				

Circuit/System Description

The body control module (BCM) applies battery positive voltage to the tailgate release relay control circuit, which energises the coil side of the tailgate release relay. The switch side of the tailgate release relay then closes, supplying battery positive voltage through the relay and the relay controlled output circuit to the rear closure latch. The rear closure latch then releases the rear hatch so that it may be manually raised to an open position.

Conditions for Running the DTC

When the rear closure latch is actively being requested by the BCM.

Conditions for Setting the DTC

The BCM detects a short to ground in the tailgate release relay control circuit.

Action Taken When the DTC Sets

The rear closure latch will malfunction.

Conditions for Clearing the DTC

- This DTC will be current for as long as the fault is present.
- When the fault is no longer present, the DTC will be a history DTC.
- A history DTC will clear after 50 ignition cycles.

Reference Information

Schematic Reference

Release Systems Schematics : Tailgate Schematics → Release System Schematics

Connector End View Reference

Component Connector End Views

Description and Operation

Rear Hatch/Gate Description and Operation

Electrical Information Reference

- Circuit Testing
- Connector Repairs
- Testing for Intermittent Conditions and Poor Connections
- Wiring Repairs

Scan Tool Reference

Control Module References for scan tool information

Circuit/System Verification

Vehicle in Service Mode, command the rear closure latch to UNLATCH with a scan tool. The rear closure latch should release the rear hatch.

Circuit/System Testing

1. Vehicle OFF, disconnect the KR95A tailgate release relay.
2. Test for less than 10 Ω between the ground circuit terminal 48 and ground.
   If greater than the specified range, test the ground circuit for an open/high resistance.
3. Connect a test lamp between the control circuit terminal 44 and the ground circuit terminal 48.
4. Vehicle in Service Mode, command the rear closure latch to UNLATCH with a scan tool, the test lamp should turn ON while commanding the UNLATCH state.
   If the test lamp is always ON, test the control circuit for a short to voltage. If the circuit tests normal, replace the K9 BCM.
   If the test lamp is always OFF, test the control circuit for a short to ground or an open/high resistance. If the circuit tests normal, replace the K9 BCM.
5. If all circuits test normal, test or replace the KR95A tailgate release relay.

Component Testing

1. Vehicle OFF, disconnect the KR95A tailgate release relay.
2. Test for 60-200 Ω between terminals 85 and 86.
   If not within the specified range, replace the KR95A tailgate release relay.
3. Test for infinite resistance between the following terminals:
   - 30 and 86
   - 30 and 87
   - 30 and 85
   - 85 and 87

   If less than the specified value, replace the KR95A tailgate release relay.
4. Install a 3A fused jumper wire between relay terminal 85 and 12 V. Install a jumper wire between relay terminal 86 and ground. Test for less than 2 Ω between terminals 30 and 87.
   If greater than the specified range, replace the KR95A tailgate release relay.

Repair Instructions

Perform the Diagnostic Repair Verification after completing the diagnostic procedure.

- Relay Replacement : Within an Electrical Center → Attached to Wire Harness
- Control Module References for BCM replacement, programming and setup

&#169© Copyright Chevrolet. All rights reserved

DTC B3618

Diagnostic Instructions

- Perform the Diagnostic System Check - Vehicle prior to using this diagnostic procedure.
- Review Strategy Based Diagnosis for an overview of the diagnostic approach.
- Diagnostic Procedure Instructions provides an overview of each diagnostic category.

DTC Descriptor

DTC B3618 00: Exterior Tailgate Unlatch Switch Circuit Malfunction

Diagnostic Fault Information

Circuit	Short to Ground	Open/High Resistance	Short to Voltage	Signal Performance
Rear Closure Handle Switch Open Signal	B3618 00	1	1	--
Ground	--	1	--	--
1. Tailgate Release Switch Inoperative				

Circuit/System Description

When the vehicle is in service mode, the body control module (BCM) supplies a signal to the tailgate handle switch through the rear closure handle switch open signal circuit. When the tailgate handle switch is pressed, the voltage within the signal circuit is pulled low and in response, the BCM will energise the tailgate release relay.

Conditions for Running the DTC

The system voltage is 9-16 V.

Conditions for Setting the DTC

The BCM detects a short to ground in the rear closure handle switch open signal circuit for greater than 60 seconds

Action Taken When the DTC Sets

The rear hatch will not open when the tailgate handle switch is pressed.

Conditions for Clearing the DTC

- This DTC will be current for as long as the fault is present.
- When the fault is no longer present, the DTC will be a history DTC.
- A history DTC will clear after 50 ignition cycles.

Reference Information

Schematic Reference

Release Systems Schematics : Tailgate Schematics → Release System Schematics

Connector End View Reference

Component Connector End Views

Description and Operation

Rear Hatch/Gate Description and Operation

Electrical Information Reference

- Circuit Testing
- Connector Repairs
- Testing for Intermittent Conditions and Poor Connections
- Wiring Repairs

Scan Tool Reference

Control Module References for scan tool information

Circuit/System Verification

Vehicle in Service Mode, observe the scan tool Boot Lid/Tailgate Window Exterior Unlatch Switch parameter while pressing and releasing the S46 tailgate handle switch. The parameter should change between Active and Inactive each time the switch is pressed and released.

Circuit/System Testing

1. Vehicle OFF, disconnect the harness connector at the S46 tailgate handle switch.
2. Test for less than 10 Ω between the ground circuit terminal 2 and ground.
   If greater than the specified range, test the ground circuit for an open/high resistance.
3. Vehicle in Service Mode, verify the scan tool Boot Lid/Tailgate Window Exterior Unlatch Switch parameter is Inactive.
   If not the specified value, test the signal circuit terminal 1 for a short to ground. If the circuit tests normal, replace the K9 BCM.
4. Install a 3 A fused jumper wire between the signal circuit terminal 1 and the ground circuit terminal 2. Verify the scan tool Boot Lid/Tailgate Window Exterior Unlatch Switch parameter is Active.
   If not the specified value, test the signal circuit for a short to voltage or an open/high resistance. If the circuit tests normal, replace the K9 BCM.
5. If all circuits test normal, test or replace the S46 tailgate handle switch.

Component Testing

Boot Release Switch

1. Vehicle OFF, disconnect the harness connector at the S46 tailgate handle switch.
2. Test for infinite resistance between the signal terminal 1 and the ground terminal 2 with the switch in the open position.
   If not the specified value, replace the S46 tailgate handle switch.
3. Test for less than 2 Ω between the signal terminal 1 and the ground terminal 2 with the switch in the closed position.
   If greater than the specified range, replace the S46 tailgate handle switch.

Repair Instructions

Perform the Diagnostic Repair Verification after completing the diagnostic procedure.

- Tailgate Release Switch Replacement
- Control Module References for BCM replacement, programming and setup

&#169© Copyright Chevrolet. All rights reserved

DTC B3930

Diagnostic Instructions

- Perform the Diagnostic System Check - Vehicle prior to using this diagnostic procedure.
- Review Strategy Based Diagnosis for an overview of the diagnostic approach.
- Diagnostic Procedure Instructions provides an overview of each diagnostic category.

DTC Descriptor

DTC B3930 02: Child Security Lock Motors Circuit Short to Ground

Diagnostic Fault Information

Circuit	Short to Ground	Open/High Resistance	Short to Voltage	Signal Performance
Door Lock Security Relay Control	B3930 02	1	1	--
Under-bonnet Fuse Block Ground	--	1	--	--
1. Child Security Door Lock Malfunction				

Circuit/System Description

The child door lockout switch is on the driver door lock/window switch and controls the child locks on the rear doors as well as the rear window switches. When the BCM receives a command from the window lockout switch, it will apply voltage to the door lock security relay coil, this will energise the relay and the contact within the relay will then direct the voltage to lock the left rear and right rear child locks and then isolate them from the normal door lock system to prevent the rear doors from being opened by using the interior rear door handles.

Conditions for Running the DTC

Battery voltage must be between 9-16 V.

Conditions for Setting the DTC

The BCM detects a short to ground in the child security lock relay circuit.

Action Taken When the DTC Sets

The interior rear door handles will continue to function when commanded to lockout.

Conditions for Clearing the DTC

- This DTC will be current for as long as the fault is present.
- When the fault is no longer present, the DTC will be a history DTC.
- A history DTC will clear after 50 ignition cycles.

Reference Information

Schematic Reference

Door Lock/Indicator Schematics

Connector End View Reference

Component Connector End Views

Description and Operation

Power Door Locks Description and Operation

Electrical Information Reference

- Circuit Testing
- Connector Repairs
- Testing for Intermittent Conditions and Poor Connections
- Wiring Repairs

Scan Tool Reference

Control Module References for scan tool information

Circuit/System Verification

Vehicle in Service Mode, with all the doors locked, command the child security lockout by pressing the window lockout switch on the S79D window switch-driver, the interior rear door handles should not open the doors when used.

Circuit/System Testing

1. Vehicle OFF, disconnect the X3 harness connector at the X50A fuse block-under-bonnet.
2. Test for less than 10 Ω between the ground circuit terminal 48 and ground.
   If greater than the specified range, test the ground circuit for an open/high resistance.
3. Vehicle OFF, connect the X3 harness connector and disconnect the X1 harness connector at the X50A fuse block-under-bonnet.
4. Connect a test lamp between the control circuit terminal 36 and ground.
5. Vehicle in Service Mode, command the child security lockout by pressing the window lockout switch on the S79D window switch-driver. The test lamp should turn ON and OFF when changing between the commanded states.
   If the test lamp is always OFF, test the control circuit for a short to ground or an open/high resistance. If the circuit tests normal, replace the K9 BCM.
   If the test lamp is always ON, test the control circuit for a short to voltage. If the circuit tests normal, replace the K9 BCM.
6. If all circuits test normal, replace the X50A fuse block-under-bonnet.

Repair Instructions

Perform the Diagnostic Repair Verification after completing the diagnostic procedure.

- Fuse Block Replacement
- Control Module References for BCM replacement, programming and setup

&#169© Copyright Chevrolet. All rights reserved

DTC P0CC6

Diagnostic Instructions

- Perform the Diagnostic System Check - Vehicle prior to using this diagnostic procedure.
- Review Strategy Based Diagnosis for an overview of the diagnostic approach.
- Diagnostic Procedure Instructions provides an overview of each diagnostic category.

DTC Descriptor

DTC P0CC6 00: Charge Port Door Open Request Switch Wake-Up Circuit

Diagnostic Fault Information

Circuit	Short to Ground	Open/High Resistance	Short to Voltage	Signal Performance
Charge Port Door Release Switch B+	P0CC6 00	P0CC6 00	--	--
Charge Port Door Open Request Switch Wake-Up Signal	P0CC6 00	P0CC6 00	--	--

Circuit/System Description

The hybrid powertrain control module 2 monitors the voltage values of the charge port wake-up signal circuit and the charge port request signal circuit. When the charge port door release switch is pressed, the two switch contacts close and provides B+ voltage to the two signal circuits. This provides B+ to the Wake-up Circuit input of the hybrid powertrain control module 2 and lowers the voltage on the fuel door request signal circuit input to the hybrid powertrain control module 2, The hybrid powertrain control module 2 detects the voltage on the signal circuits and provides a 12 V pulse to the charge port relay, the relay briefly becomes energised which then allows B+ voltage to the charge port door latch which activates and releases the charge port door.

Conditions for Running the DTC

Hybrid Powertrain Control Module 2 is awake

Conditions for Setting the DTC

The hybrid powertrain control module 2 detects that the Charge Port Door Open Request Switch Wake-Up Circuit value does not match the expected corresponding value for the Charge Port Door Open Request resistor ladder switch input.

Action Taken When the DTC Sets

The charge port door will not open if the hybrid powertrain control module 2 is asleep

Conditions for Clearing the DTC

DTC P0CC6 is a type B DTC

Reference Information

Schematic Reference

Plug-In Charging Schematics

Connector End View Reference

Component Connector End Views

Description and Operation

Charge Port Door Description and Operation

Electrical Information Reference

- Circuit Testing
- Connector Repairs
- Testing for Intermittent Conditions and Poor Connections
- Wiring Repairs

Scan Tool Reference

Control Module References for scan tool information

Circuit/System Verification

Vehicle is Service Mode, command the charge port door OPEN by pressing the S113 charge port door open request switch. The M80 charge port door unlatch actuator

should unlatch and the charge port door should open

Circuit/System Testing

1. Vehicle OFF, disconnect the harness connector at the S113 charge port door open request switch.
2. Verify that a test lamp illuminates between the B+ circuit terminal 1 and ground.
   If the test lamp does not illuminate, test the B+ circuit for a short to ground or an open/high resistance.
3. Connect the harness connector at the S113 charge port door open request switch.
4. Disconnect the X2 harness connector at the K114B hybrid powertrain control module 2.
5. Connect a test lamp between the signal circuit terminal 29 and ground.
6. Observe the function of the test lamp while pressing and releasing the S113 charge port door open request switch. The test lamp should turn ON each time the switch is pressed.
   If the test lamp is always ON, test the signal circuit for a short to voltage. If the circuit tests normal, test or replace the S113 charge port door open request switch.
   If the test lamp is always OFF, test the signal circuit for a short to ground or an open/high resistance. If the circuit tests normal, test or replace the S113 charge port door open request switch.
7. If all circuits test normal, replace the K114B hybrid powertrain control module 2.

Component Testing

1. Vehicle OFF, disconnect the harness connector at the S113 charge port door open request switch.
2. Test for infinite resistance between the signal terminal 2 and the B+ terminal 1 with the switch in the open position.
   If not the specified value, replace the S113 charge port door open request switch.
3. Test for less than 2 Ω between the signal terminal 2 and the B+ terminal 1 with the switch in the closed position.
   If greater than the specified range, replace the S113 charge port door open request switch.

Repair Instructions

Perform the Diagnostic Repair Verification after completing the diagnostic procedure.

- Charger Door Release Switch Replacement
- Control Module References for the hybrid powertrain control module 2 replacement, programming and setup

&#169© Copyright Chevrolet. All rights reserved

DTC P0CC7, P0CC9, or P0CCA

Diagnostic Instructions

- Perform the Diagnostic System Check - Vehicle prior to using this diagnostic procedure.
- Review Strategy Based Diagnosis for an overview of the diagnostic approach.
- Diagnostic Procedure Instructions provides an overview of each diagnostic category.

DTC Descriptors

DTC P0CC7 00: Charge Port Door Open Request Switch Circuit

DTC P0CC9 00: Charge Port Door Open Request Switch Circuit Low Voltage

DTC P0CCA 00: Charge Port Door Open Request Switch Circuit High Voltage

Diagnostic Fault Information

Circuit	Short to Ground	Open	High Resistance	Short to Voltage	Signal Performance
Charge Port Door Release Switch B+	1	1	P0CC6 00	--	--
Charge Port Door Request Signal	P0CC9 00	P0CC9 00	P0CC7 00	P0CCA 00	-
Charge Port Release Switch Low Reference	-	P0CC9 00	P0CC7 00	P0CCA 00	-
1. Charge Port Door Switch Malfunction					

Circuit/System Description

The hybrid powertrain control module 2 monitors the voltage values of the charge port wake-up signal circuit and the charge port request signal circuit. When the charge port door release switch is pressed, the switch contact closes and provides B+ voltage to the wake--up signal circuit. The hybrid powertrain control module 2 detects the voltage on the signal circuits and provides a 12 V pulse to the charge port relay, the relay briefly becomes energised which then allows B+ voltage to the charge port door latch which activates and releases the charge port door.

Conditions for Running the DTC

Hybrid Powertrain Control Module 2 is awake

Conditions for Setting the DTC

P0CC7 00

The hybrid powertrain control module 2 detects high resistance or an invalid high or invalid low voltage in the in the charge port door open request switch circuit.

P0CC9 00

The hybrid powertrain control module 2 detects a short to ground or an open/high resistance in the charge port door open request switch circuit.

P0CCA 00

The hybrid powertrain control module 2 detects a short to voltage in the charge port door open request switch circuit.

Action Taken When the DTC Sets

The charge port door will malfunction and the charge port door may not be able to be opened.

Conditions for Clearing the DTC

DTC P0CC7 00, P0CC9 00 and P0CCA 00 are type B DTCs

Reference Information

Schematic Reference

Plug-In Charging Schematics

Connector End View Reference

Component Connector End Views

Description and Operation

Charge Port Door Description and Operation

Electrical Information Reference

- Circuit Testing
- Connector Repairs
- Testing for Intermittent Conditions and Poor Connections
- Wiring Repairs

Scan Tool Reference

Control Module References for scan tool information

Circuit/System Verification

Vehicle in Service Mode, command the M80 charge port door actuator to UNLATCH with the scan tool, the M80 charge port door actuator should unlatch and the charge port door should open.

Circuit/System Testing

1. Vehicle OFF, disconnect the harness connector at the S113 charge port door open request switch.
2. Test for less than 10 Ω between the low reference circuit terminal 6 and ground.
   If greater than the specified range, test the low reference circuit for a short to voltage or an open/high resistance. If the circuit tests normal, replace the K114B hybrid powertrain control module 2.
3. Vehicle in Service Mode, test for 4.75 -- 5.25 V between the signal circuit terminal 3 and ground.
   If less than the specified range, test the signal circuit for a short to ground or an open/high resistance. If the circuit tests normal, replace the K114B hybrid powertrain control module 2.
   If greater than the specified range, test the signal circuit for a short to voltage. If the circuit tests normal, replace the K114B hybrid powertrain control module 2.
4. If all circuits test normal, test or replace the S113 charge port door open request switch.

Repair Instructions

Perform the Diagnostic Repair Verification after completing the diagnostic procedure.

- Charger Door Release Switch Replacement
- Control Module References for the hybrid powertrain control module 2 replacement, programming and setup

&#169© Copyright Chevrolet. All rights reserved

DTC P0CCC, P0CCE, or P0CCF

Diagnostic Instructions

- Perform the Diagnostic System Check - Vehicle prior to using this diagnostic procedure.
- Review Strategy Based Diagnosis for an overview of the diagnostic approach.
- Diagnostic Procedure Instructions provides an overview of each diagnostic category.

DTC Descriptors

DTC P0CCC 00: Charge Port Door Position Sensor Circuit

DTC P0CCE 00: Charge Port Door Position Sensor Circuit Low Voltage

DTC P0CCF 00: Charge Port Door Position Sensor Circuit High Voltage

Diagnostic Fault Information

Circuit	Short to Ground	Open	High Resistance	Short to Voltage	Signal Performance
Charge Port Door Position Sensor Signal	P0CCE 00	P0CCE 00	P0CCC 00	P0CCF 00	-
Charge Port Door Position Sensor Ground	-	P0CCE 00	P0CCC 00	--	--

Circuit/System Description

The hybrid powertrain control module 2 provides a 5V signal through a pull-up resistor to the Charge Port Door Position Sensor Circuit. The other end of the Charge Port Door Position Sensor Circuit is connected to the Charge Port Door Position Switch. The hybrid powertrain control module 2 monitors the voltage on the Charge Port Door Position Sensor Circuit. In normal operation, the hybrid powertrain control module 2 sends a serial data message to the driver information centre in the instrument panel cluster to display the Charge Door Open message.

Conditions for Running the DTC

Hybrid Powertrain Control Module 2 must be awake.

Conditions for Setting the DTC

P0CCC 00

The hybrid powertrain control module 2 detects the charge port door position sensor signal circuit voltage is mid range between expected high and low voltage values

P0CCE 00

The hybrid powertrain control module 2 detects a short to ground in the charge port position sensor circuit.

P0CCF 00

The hybrid powertrain control module 2 detects a short to voltage or an open/high resistance in the charge port position sensor circuit.

Action Taken When the DTC Sets

The Charge Door Open message will not illuminate when the charge port door is open or ajar.

Conditions for Clearing the DTC

DTC P0CCC 00, P0CCE 00 and P0CCF 00 are type B DTCs

Reference Information

Schematic Reference

Plug-In Charging Schematics

Connector End View Reference

Component Connector End Views

Description and Operation

Charge Port Door Description and Operation

Electrical Information Reference

- Circuit Testing
- Connector Repairs
- Testing for Intermittent Conditions and Poor Connections
- Wiring Repairs

Scan Tool Reference

Control Module References for scan tool information

Circuit/System Verification

Vehicle in Service Mode, observe the scan tool Charge Port Door parameter while opening and closing the charge port door, the value should change between Open and Closed.

Circuit/System Testing

1. Vehicle OFF, disconnect the harness connector at the B197 charge port door position switch.
2. Test for less than 10 Ω between the ground circuit terminal C and ground.
   If greater than the specified range, test the ground circuit for an open/high resistance.
3. Vehicle in Service Mode, test for 4.75-5.25 V between the signal circuit terminal A and ground.
   If less than the specified range, test the signal circuit for a short to ground or an open/high resistance. If the circuit tests normal, replace the K114B hybrid powertrain control module 2.
   If greater than the specified range, test the signal circuit for a short to voltage. If the circuit tests normal, replace the K114B hybrid powertrain control module 2.
4. If all circuits test normal, test or replace the B197 charge port door position switch.

Component Testing

1. Vehicle OFF, disconnect the harness connector at the B197 charge port door position switch.
2. Test for 180 Ω--190 Ω between the signal terminal A and the ground terminal C with the switch in the open position.
   If not within the specified range, replace the B197 charge port door position switch.
3. Test for 2040 Ω--2065 Ω between the signal terminal A and the ground terminal C with the switch in the closed position.
   If not within the specified range, replace the B197 charge port door position switch.

Repair Instructions

Perform the Diagnostic Repair Verification after completing the diagnostic procedure.

- Charge Port Door Ajar Indicator Switch Replacement
- Control Module References for the hybrid powertrain control module 2 replacement, programming and setup

&#169© Copyright Chevrolet. All rights reserved

DTC P0CD1

Diagnostic Instructions

- Perform the Diagnostic System Check - Vehicle prior to using this diagnostic procedure.
- Review Strategy Based Diagnosis for an overview of the diagnostic approach.
- Diagnostic Procedure Instructions provides an overview of each diagnostic category.

DTC Descriptor

DTC P0CD1 00: Charge Port Door Unlock Control Circuit

Diagnostic Fault Information

Circuit	Short to Ground	Open/High Resistance	Short to Voltage	Signal Performance
Charge Port Relay Control	P0CD1 00	P0CD1 00	1	--
Ground	--	P0CD1 00	--	--
1. Charge Port Door Latch Malfunction				

Circuit/System Description

The hybrid powertrain control module 2 monitors the voltage values of the charge port wake-up signal circuit and the charge port request signal circuit. When the charge port door release switch is pressed, the two switch contacts closes. The hybrid powertrain control module 2 detects the voltage on the signal circuits and provides a 12 V pulse to the charge port relay, the relay briefly becomes energised which then allows B+ voltage to the charge port door latch which activates and releases the charge port doorr.

Conditions for Running the DTC

The hybrid powertrain control module 2 is awake

Conditions for Setting the DTC

- The hybrid powertrain control module 2 detects a short to ground or an open/high resistance in the charge port door relay control circuit.

- The hybrid powertrain control module 2 detects an open/high resistance in the charge port door relay ground circuit

Action Taken When the DTC Sets

The charge port door latch will malfunction and the charge port door may not be able to be opened.

Conditions for Clearing the DTC

DTC P0CD1 00 is a type B DTC

Reference Information

Schematic Reference

Plug-In Charging Schematics

Connector End View Reference

Component Connector End Views

Description and Operation

Charge Port Door Description and Operation

Electrical Information Reference

- Circuit Testing
- Connector Repairs
- Testing for Intermittent Conditions and Poor Connections
- Wiring Repairs

Scan Tool Reference

Control Module References for scan tool information

Circuit/System Verification

Vehicle in Service Mode, command the charge port door to OPEN with the scan tool, the M80 charge port door actuator should release the charge port door allowing it to open.

Circuit/System Testing

1. Vehicle OFF, disconnect the KR119 charge port door relay.
2. Test for less than 1 Ω between the ground circuit terminal 85 and ground.
   If greater than the specified range, test the ground circuit for an open/high resistance.
3. Connect a test lamp between the control circuit terminal 86 and ground.
4. Vehicle in Service Mode, command the charge port door to OPEN with a scan tool. The test lamp should turn ON during the OPEN command.
   If the test lamp is always ON, test the control circuit for a short to voltage. If the circuit tests normal, replace the K114B hybrid powertrain control module 2.
   If the test lamp is always OFF, test the control circuit for a short to ground or an open/high resistance. If the circuit tests normal, replace the K114B hybrid powertrain control module 2.
5. If all circuits test normal, test or replace the KR119 charge port door relay.

Component Testing

Relay Test

1. Vehicle OFF, disconnect the KR119 charge port door relay.
2. Test for 60-180 Ω between terminals 85 and 86.
   If not within the specified range, replace the KR119 charge port door relay.
3. Test for infinite resistance between the following terminals:
   - 30 and 86
   - 30 and 87
   - 30 and 85
   - 85 and 87

   If not the specified value, replace the KR119 charge port door relay.
4. Install a 5 A fused jumper wire between relay terminal 85 and 12 V. Install a jumper wire between relay terminal 86 and ground. Test for less than 2 Ω between terminals 30 and 87.
   If greater than the specified range, replace the KR119 charge port door relay.

Repair Instructions

Perform the Diagnostic Repair Verification after completing the diagnostic procedure.

- Relay Replacement : Within an Electrical Center → Attached to Wire Harness
- Control Module References for the hybrid powertrain control module 2 replacement, programming and setup

&#169© Copyright Chevrolet. All rights reserved

DTC P0CD2

Diagnostic Instructions

- Perform the Diagnostic System Check - Vehicle prior to using this diagnostic procedure.
- Review Strategy Based Diagnosis for an overview of the diagnostic approach.
- Diagnostic Procedure Instructions provides an overview of each diagnostic category.

DTC Descriptor

DTC P0CD2 00: Charge Port Door Unlock Control Performance

Circuit/System Description

When the vehicle is in the Service Mode, the hybrid powertrain control module 2 supplies a 5V signal to the charge door position sensor through the charge port door position sensor signal circuit. The charge port door ajar switch contains a resistor ladder interface for switch position between two resistors for sensing used by the hybrid powertrain control module 2 to determine if the charge port door is in the open position or the closed position.

Conditions for Running the DTC

The charge port door does not open when commanded.

Conditions for Setting the DTC

- The charge port door has been commanded to open twice but the hybrid powertrain control module 2 has detected that the charge port door is still in the closed position
- The charge port door has been commanded to open but the hybrid powertrain control module 2 has detected that the charge port door is still in the closed position after 5 seconds.

Action Taken When the DTC Sets

The malfunction indicator lamp will be illuminated.

Conditions for Clearing the DTC

- The DTC will be current for as long as the fault is present.
- When the fault is no longer present, the DTC will become a history DTC.
- A history DTC will clear after 50 ignition cycles

Diagnostic Aids

This DTC will set if the charge port door is stuck closed as may occur when ice and/or snow has accumulated around the charge port door or if any moisture on the charge port door weatherstrip freezes to the charge port door. Placing the vehicle in a warm environment and allowing all the snow or ice to melt, the charge port door should function normally and the DTC will become history.

Reference Information

Schematic Reference

Plug-In Charging Schematics

Connector End View Reference

Component Connector End Views

Description and Operation

Charge Port Door Description and Operation

Electrical Information Reference

- Circuit Testing
- Connector Repairs
- Testing for Intermittent Conditions and Poor Connections
- Wiring Repairs

Scan Tool Reference

Control Module References for scan tool information

Circuit/System Verification

1. Vehicle OFF, transmission selector in Park, command the Battery Charging System Receptacle Door to OPEN with the scan tool, the M80 charge port door unlatch actuator should release the charge port door allowing it to be pulled open.
   If the charge port door does not open, refer to Charger Door Release Malfunction .
2. Observe the scan tool Battery Charging System Receptacle Door parameter while opening and closing the charge port door, the value should change between Open and Closed.
   If the value is always Closed, refer to Charger Door Ajar Indicator Malfunction .

&#169© Copyright Chevrolet. All rights reserved

DTC P04B6

Diagnostic Instructions

- Perform the Diagnostic System Check - Vehicle prior to using this diagnostic procedure.
- Review Strategy Based Diagnosis for an overview of the diagnostic approach.
- Diagnostic Procedure Instructions provides an overview of each diagnostic category.

DTC Descriptor

DTC P04B6 00: Fuel Fill Door Stuck Closed

Circuit/System Description

The hybrid powertrain control module 2 monitors the voltage values of the fuel fill door open request wake-up signal circuit and the fuel door request signal circuit. When the refuel request switch is pressed, the two switch contacts close. This provide B+ to the Wake-up Circuit input of the hybrid powertrain control module 2 and lowers the voltage on the fuel door request signal circuit input to the hybrid powertrain control module 2. The hybrid powertrain control module 2 detects the voltage on the signal circuits and commands the fuel system to vent and sends a serial data message to the driver information centre to display the Wait to Refuel message. The hybrid powertrain control module 2 then energises the fuel door lock/unlock actuator to unlock the fuel door.

Conditions for Running the DTC

- The hybrid powertrain control module 2 is awake
- The fuel tank is being filled.

Conditions for Setting the DTC

The hybrid powertrain control module 2 has detected that the fuel level in the fuel tank has increased but detects that the fuel filler door was always in the closed position.

Action Taken When the DTC Sets

The driver information centre will display the Service Refuel System message.

Conditions for Clearing the DTC

DTC P04B6 is a type B DTC.

Reference Information

Schematic Reference

Release Systems Schematics : Tailgate Schematics → Release System Schematics

Connector End View Reference

Component Connector End Views

Description and Operation

Fuel Fill Door Description and Operation

Electrical Information Reference

- Circuit Testing
- Connector Repairs
- Testing for Intermittent Conditions and Poor Connections
- Wiring Repairs

Scan Tool Reference

Control Module References for scan tool information

Circuit/System Verification

Observe the scan tool Fuel Door Position parameter while opening and closing the fuel filler door, the value should change between Open and Closed as the fuel filler door is opened and closed.

If the value is always Open or always Closed, refer to Fuel Filler Door Ajar Indicator Malfunction .

&#169© Copyright Chevrolet. All rights reserved

DTC P04B8-P04BA or P04DC

Diagnostic Instructions

- Perform the Diagnostic System Check - Vehicle prior to using this diagnostic procedure.
- Review Strategy Based Diagnosis for an overview of the diagnostic approach.
- Diagnostic Procedure Instructions provides an overview of each diagnostic category.

DTC Descriptors

DTC P04B8 00: Fuel Fill Door Position Sensor Circuit

DTC P04B9 00: Fuel Fill Door Position Sensor Circuit Low Voltage

DTC P04BA 00: Fuel Fill Door Position Sensor Circuit High Voltage

Diagnostic Fault Information

Circuit	Short to Ground	Open	High Resistance	Short to Voltage	Signal Performance
Fuel Door Open Signal	P04B9 00	P04B9 00	P04B8 00	P04BA 00	--
Ground	--	P04B9 00	P04B8 00	--	--

Circuit/System Description

The hybrid powertrain control module 2 provides a 5V signal through a pull-up resistor to the Fuel Door Position Sensor Circuit. The other end of the Fuel Door Position Sensor Circuit is connected to the Fuel Door Position Sensor in the Fuel Door Status Switch Assembly. The hybrid powertrain control module 2 monitors the voltage on the Fuel Door Position Sensor Circuit. In normal operation, when the Fuel Door moves to the open position, the switch in the Fuel Door Lock Position closes and lowers the voltage on the Fuel Door Lock Position Sensor Circuit.

Conditions for Running the DTC

Hybrid Powertrain Control Module 2 is awake.

Conditions for Setting the DTC

P04B8 00

The hybrid powertrain control module 2 detects the fuel door position signal circuit voltage is mid range between expected high and low voltage values

P04B9 00

The hybrid powertrain control module 2 detects a short to ground in the fuel door open signal circuit.

P04BA 00

The hybrid powertrain control module 2 detects a short to voltage or an open or high resistance in the fuel door open signal circuit.

Action Taken When the DTC Sets

The driver information centre will continuously display the Wait To Refuel message after the refuel request switch is pressed.

Conditions for Clearing the DTC

DTC P04B8 00, P04B9 00 and P04BA 00 are type B DTCs

Reference Information

Schematic Reference

Release Systems Schematics : Tailgate Schematics → Release System Schematics

Connector End View Reference

Component Connector End Views

Description and Operation

Fuel Fill Door Description and Operation

Electrical Information Reference

- Circuit Testing
- Connector Repairs
- Testing for Intermittent Conditions and Poor Connections
- Wiring Repairs

Scan Tool Reference

Control Module References for scan tool information

Circuit/System Verification

Vehicle in Service Mode, transmission selector in Park, observe the scan tool Fuel Door Position parameter while opening and closing the fuel filler door, the value should change between Open and Closed.

Circuit/System Testing

1. Vehicle OFF, disconnect the harness connector at the B208 fuel door status switch assembly.
2. Test for less than 10 Ω between the ground circuit terminal 2 and ground.
   If greater than the specified range, test the ground circuit for an open/high resistance.
3. Vehicle in Service Mode, test for 4.75 -- 5.25 V between the signal circuit terminal 1 and ground.
   If less than the specified range, test the signal circuit for a short to ground or an open/high resistance. If the circuit tests normal, replace the K114B hybrid powertrain control module 2.
   If greater than the specified range, test the signal circuit for a short to voltage. If the circuit tests normal, replace the K114B hybrid powertrain control module 2.
4. If all circuits test normal, test or replace the B208 fuel door status switch assembly.

Component Testing

1. Vehicle OFF, disconnect the harness connector at the B208 fuel door status switch assembly.
2. Test for 180 Ω--190 Ω between the signal terminal 1 and the ground terminal 2 with the switch in the open position.
   If not within the specified range, replace the B208 fuel door status switch assembly.
3. Test for 2040 Ω--2065 Ω between the signal terminal 1 and the ground terminal 2 with the switch in the closed position.
   If not within the specified range, replace the B208 fuel door status switch assembly.

Repair Instructions

Perform the Diagnostic Repair Verification after completing the diagnostic procedure.

Control Module References for the hybrid powertrain control module 2 replacement, programming and setup

&#169© Copyright Chevrolet. All rights reserved

DTC P04BB, P04BC, or P04C0

Diagnostic Instructions

- Perform the Diagnostic System Check - Vehicle prior to using this diagnostic procedure.
- Review Strategy Based Diagnosis for an overview of the diagnostic approach.
- Diagnostic Procedure Instructions provides an overview of each diagnostic category.

DTC Descriptors

DTC P04BB 00: Fuel Fill Door Lock Control Circuit

DTC P04BC 00: Fuel Fill Door Lock Performance

DTC P04C0 00: Fuel Fill Door Unlock Performance

Diagnostic Fault Information

Circuit	Short to Ground	Open/High Resistance	Short to Voltage	Signal Performance
Fuel Door Lock Actuator Lock Control	P04BB 00	P04BB 00	P04BB 00	P04BC 00
Fuel Door Lock Actuator Unlock Control	P04BB 00	P04BB 00	P04BB 00	P04C0 00

Circuit/System Description

The hybrid powertrain control module 2 monitors the voltage values of the fuel fill door open request wake-up signal circuit and the fuel door request signal circuit. When the refuel request switch is pressed, the two switch contacts close. This provide B+ to the Wake-up Circuit input of the hybrid powertrain control module 2 and lowers the voltage on the fuel door request signal circuit input to the hybrid powertrain control module 2. The hybrid powertrain control module 2 detects the voltage on the signal circuits and commands the fuel system to vent and sends a serial data message to the driver information centre to display the Wait to Refuel message. The hybrid powertrain control module 2 then energises the fuel door lock/unlock actuator to unlock the fuel door.

Conditions for Running the DTC

Hybrid Powertrain Control Module 2 is awake

Conditions for Setting the DTC

P04BB 00

The hybrid powertrain control module 2 has detected a short to ground, short to voltage or an open/high resistance on either of the lock actuator control circuits

P04BC 00

The hybrid powertrain control module 2 provided a lock command with no correspoding lock status indication on the fuel door lock actuator input circuit

P04C0 00

The hybrid powertrain control module 2 provided an unlock command with no correspoding unlock status indication on the fuel door lock actuator input circuit

Action Taken When the DTC Sets

- The fuel door latch will malfunction and the fuel filler door may not be able to be opened.
- The Wait to Refuel message always be displayed on the driver information centre.

Conditions for Clearing the DTC

DTC P04BB 00, P04BC 00 and P04C0 00 are type B DTCs

Reference Information

Schematic Reference

Release Systems Schematics : Tailgate Schematics → Release System Schematics

Connector End View Reference

Component Connector End Views

Description and Operation

Fuel Fill Door Description and Operation

Electrical Information Reference

- Circuit Testing
- Connector Repairs
- Testing for Intermittent Conditions and Poor Connections
- Wiring Repairs

Scan Tool Reference

Control Module References for scan tool information

Circuit/System Verification

Vehicle in Service Mode command the fuel door to LOCK and UNLOCK with a scan tool, the M97 fuel door lock actuator should perform the LOCK and UNLOCK functions.

Circuit/System Testing

1. Vehicle OFF, disconnect the harness connector at the M97 fuel door lock actuator.
2. Vehicle in Service Mode, verify that a test lamp illuminates between the control circuit terminal 1 and ground.
   If the test lamp is OFF, test the control circuit for a short to ground or an open/high resistance. If the circuit tests normal, replace the K114B hybrid powertrain control module 2.
3. Verify that a test lamp illuminates between the control circuit terminal 2 and ground.
   If the test lamp is OFF, test the control circuit for a short to ground or an open/high resistance. If the circuit tests normal, replace the K114B hybrid powertrain control module 2.
4. Connect a test lamp between the control circuit terminal 1 and the control circuit terminal 2
5. Vehicle in Service Mode, command the fuel door to LOCK and UNLOCK with a scan tool. The test lamp should briefly illuminate while changing between the commanded states.
   If the test lamp is always OFF, test both control circuits for a short to voltage. If the circuits test normal, replace the K114B hybrid powertrain control module 2.
6. If all circuits test normal, test or replace the M97 fuel door lock actuator.

Component Testing

Fuel Door Lock Actuator

1. Vehicle OFF, disconnect the harness connector at the M97 fuel door lock actuator.
2. Install a 25 A fused jumper wire between one of the control terminals and 12 V. Momentarily install a jumper wire between the other control terminal and ground. Reverse the jumper wires at least two times, the M97 fuel door lock actuator should perform the LOCK and UNLOCK functions.
   If it does not perform as specified, replace the M97 fuel door lock actuator.

Repair Instructions

Perform the Diagnostic Repair Verification after completing the diagnostic procedure.

- Fuel Tank Filler Door Lock Actuator Replacement
- Control Module References for the hybrid powertrain control module 2 replacement, programming and setup

&#169© Copyright Chevrolet. All rights reserved

DTC P04C3-P04C6

Diagnostic Instructions

- Perform the Diagnostic System Check - Vehicle prior to using this diagnostic procedure.
- Review Strategy Based Diagnosis for an overview of the diagnostic approach.
- Diagnostic Procedure Instructions provides an overview of each diagnostic category.

DTC Descriptors

DTC P04C3 00: Fuel Fill Door Lock Position Sensor Circuit

DTC P04C4 00: Fuel Fill Door Lock Position Sensor Performance

DTC P04C5 00: Fuel Fill Door Lock Position Sensor Circuit Low Voltage

DTC P04C6 00: Fuel Fill Door Lock Position Sensor Circuit High Voltage

Diagnostic Fault Information

Circuit	Short to Ground	Open	High Resistance	Short to Voltage	Signal Performance
Fuel Door Lock Sensor Signal	P04C5 00	P04C6 00	P04C3 00	P04C6 00	P04C4 00
Fuel Door Position Sensor Ground	-	P04C6 00	P04C3 00	--	--

Circuit/System Description

The hybrid powertrain control module 2 provides a 5V signal through a pull-up resistor to the Fuel Door Lock Position Sensor Circuit. The other end of the Fuel Door Lock Position Sensor Circuit is connected to the Fuel Door Lock Position Sensor in the Fuel Door Status Switch Assembly. The hybrid powertrain control module 2 monitors the voltage on the Fuel Door Lock Position Sensor Circuit. In normal operation, when the Fuel Door Lock moves to the unlocked position, the switch in the Fuel Door Lock Position closes and lowers the voltage on the Fuel Door Lock Position Sensor Circuit.

The hybrid powertrain control module 2 monitors the Fuel Door Lock Position Sensor Circuit for invalid and out of range voltages and for unexpected lock and unlock statuses

Conditions for Running the DTC

The hybrid powertrain control module 2 is awake.

Conditions for Setting the DTC

P04C3 00

The hybrid powertrain control module 2 detects the fuel door position sensor signal circuit voltage is mid range between expected high and low voltage values.

P04C4 00

The hybrid powertrain control module 2 detects an unlock condition when there was not a corresponding unlock command.

P04C5 00

The hybrid powertrain control module 2 detects a short to ground in the fuel door lock sensor signal circuit.

P04C6 00

The hybrid powertrain control module 2 detects a short to voltage or an open/high resistance in the fuel door lock sensor signal circuit.

Action Taken When the DTC Sets

The fuel door lock actuator may malfunction.

Conditions for Clearing the DTC

DTC P04C3 00, P04C4 00, P04C5 00 and P04C6 00 are type B DTCs

Reference Information

Schematic Reference

Release Systems Schematics : Tailgate Schematics → Release System Schematics

Connector End View Reference

Component Connector End Views

Description and Operation

Fuel Fill Door Description and Operation

Electrical Information Reference

- Circuit Testing
- Connector Repairs
- Testing for Intermittent Conditions and Poor Connections
- Wiring Repairs

Scan Tool Reference

Control Module References for scan tool information

Circuit/System Verification

1. Vehicle in Service Mode, with the fuel filler door unlocked, verify that the scan tool Fuel Door Lock parameter is UNLOCKED.
2. With the fuel filler door locked, verify that the scan tool Fuel Door Lock parameter is LOCKED.

Circuit/System Testing

1. Vehicle OFF, disconnect the harness connector at the B208 fuel door status switch assembly.
2. Test for less than 10 Ω between the ground circuit terminal 4 and ground.
   If greater than the specified range, test the ground circuit for an open/high resistance.
3. Vehicle in Service Mode, test for 4.75 -- 5.25 V between the signal circuit terminal 3 and ground.
   If less than the specified range, test the signal circuit for a short to ground or an open/high resistance. If the circuit tests normal, replace the K114B hybrid powertrain control module 2.
   If greater than the specified range, test the signal circuit for a short to voltage. If the circuit tests normal, replace the K114B hybrid powertrain control module 2.
4. If all circuits test normal, test or replace the B208 fuel door status switch assembly.

Repair Instructions

Perform the Diagnostic Repair Verification after completing the diagnostic procedure.

Control Module References for the hybrid powertrain control module 2 replacement, programming and setup

&#169© Copyright Chevrolet. All rights reserved

DTC P04C8, P04CA, or P04CB

Diagnostic Instructions

- Perform the Diagnostic System Check - Vehicle prior to using this diagnostic procedure.
- Review Strategy Based Diagnosis for an overview of the diagnostic approach.
- Diagnostic Procedure Instructions provides an overview of each diagnostic category.

DTC Descriptors

DTC P04C8 00: Fuel Fill Door Open Request Switch Circuit

DTC P04CA 00: Fuel Fill Door Open Request Switch Circuit Low Voltage

DTC P04CB 00: Fuel Fill Door Open Request Switch Circuit High Voltage

Diagnostic Fault Information

Circuit	Short to Ground	Open	High Resistance	Short to Voltage	Signal Performance
Fuel Door Release Switch Signal	P04CA 00	P04C8 00	P04C8 00	P04CB 00	-
Refuel Request Switch Low Reference	-	P04C8 00	P04C8 00	P04CB 00	--

Circuit/System Description

The hybrid powertrain control module 2 monitors the voltage values of the fuel fill door open request wake-up signal circuit and the fuel door request signal circuit. When the refuel request switch is pressed, the two switch contacts close. This provide B+ to the Wake-up Circuit input of the hybrid powertrain control module 2 and lowers the voltage on the fuel door request signal circuit input to the hybrid powertrain control module 2. The hybrid powertrain control module 2 detects the voltage on the signal circuits and commands the fuel system to vent and sends a serial data message to the driver information centre to display the Wait to Refuel message. The hybrid powertrain control module 2 then energises the fuel door lock/unlock actuator to unlock the fuel door.

Conditions for Running the DTC

The hybrid powertrain control module 2 is awake

Conditions for Setting the DTC

P04C8 00

The hybrid powertrain control module 2 the fuel fill door open request switch circuit voltage is mid-range between expected high and low voltage values.

P04CA 00

The hybrid powertrain control module 2 detects a short to ground in the refuel request signal circuit.

P04CB 00

The hybrid powertrain control module 2 detects a short to voltage or an open/high resistance in the refuel request signal circuit.

Action Taken When the DTC Sets

The refuel request switch will still function normally.

Conditions for Clearing the DTC

DTC P04C8 00, P04CA 00 and P04CB 00 are type B DTCs

Reference Information

Schematic Reference

Release Systems Schematics : Tailgate Schematics → Release System Schematics

Connector End View Reference

Component Connector End Views

Description and Operation

Fuel Fill Door Description and Operation

Electrical Information Reference

- Circuit Testing
- Connector Repairs
- Testing for Intermittent Conditions and Poor Connections
- Wiring Repairs

Scan Tool Reference

Control Module References for scan tool information

Circuit/System Verification

Vehicle in Service Mode, command the fuel filler door to UNLOCK by pressing the S117 refuel request switch, the M97 fuel door lock actuator should UNLOCK allowing the fuel filler door to open.

Circuit/System Testing

1. Vehicle OFF, disconnect the harness connector at the S117 refuel request switch.
2. Test for less than 70 Ω between the low reference circuit terminal 6 and ground.
   If greater than the specified range, test the low reference circuit for a short to voltage or an open/high resistance. If the circuit tests normal, replace the K114B hybrid powertrain control module 2.
3. Vehicle in Service Mode, test for 4.75 -- 5.25 V between the signal circuit terminal 3 and ground.
   If less than the specified range, test the signal circuit for a short to ground or an open/high resistance. If the circuit tests normal, replace the K114B hybrid powertrain control module 2.
   If greater than the specified range, test the signal circuit for a short to voltage. If the circuit tests normal, replace the K114B hybrid powertrain control module 2.
4. If all circuits test normal, test or replace the S117 refuel request switch.

Repair Instructions

Perform the Diagnostic Repair Verification after completing the diagnostic procedure.

- Fuel Tank Filler Door Lock Release Switch Replacement
- Control Module References for the hybrid powertrain control module 2 replacement, programming and setup

&#169© Copyright Chevrolet. All rights reserved

DTC P169D

Diagnostic Instructions

- Perform the Diagnostic System Check - Vehicle prior to using this diagnostic procedure.
- Review Strategy Based Diagnosis for an overview of the diagnostic approach.
- Diagnostic Procedure Instructions provides an overview of each diagnostic category.

DTC Descriptor

DTC P169D 00: Fuel Fill Door Open Request Switch Wake-Up Circuit Performance

Diagnostic Fault Information

Circuit	Short to Ground	Open/High Resistance	Short to Voltage	Signal Performance
B+	P169D 00	P169D 00	--	--
Fuel Door Open Request Wake-Up Signal	P169D 00	P169D 00	1	--
1. Fuel Door Switch Malfunction				

Circuit/System Description

The hybrid powertrain control module 2 monitors the voltage values of the fuel fill door open request wake-up signal circuit and the fuel door request signal circuit. When the refuel request switch is pressed, the two switch contacts close. This provides B+ to the Wake-up Circuit input of the hybrid powertrain control module 2 and lowers the voltage on the fuel door request signal circuit input to the hybrid powertrain control module 2.

The hybrid powertrain control module 2 detects the voltage on the signal circuits and commands the fuel system to vent and sends a serial data message to the driver information centre to display the Wait to Refuel message. The hybrid powertrain control module 2 then energises the fuel door lock/unlock actuator to unlock the fuel door

Conditions for Running the DTC

- The hybrid powertrain control module 2 is awake
- A refuel request has been commanded

Conditions for Setting the DTC

The hybrid powertrain control module 2 detects that the Fuel Fill Door Open Request Switch Wake-Up Circuit value does not match the expected corresponding value for the Fuel Fill Door Open Request resistor ladder switch input.

Action Taken When the DTC Sets

- The fuel filler door unlatch request will only function when the hybrid powertrain control module 2 is awake.
- The driver information centre will display the Service Refuelling System message.

Conditions for Clearing the DTC

DTC P169D 00 is a type B DTC

Reference Information

Schematic Reference

Release Systems Schematics : Tailgate Schematics → Release System Schematics

Connector End View Reference

Component Connector End Views

Description and Operation

Fuel Fill Door Description and Operation

Electrical Information Reference

- Circuit Testing
- Connector Repairs
- Testing for Intermittent Conditions and Poor Connections
- Wiring Repairs

Scan Tool Reference

Control Module References for scan tool information

Circuit/System Verification

Vehicle in Service Mode, command the fuel filler door to UNLATCH by pressing the S117 refuel request switch. The M97 fuel door lock actuator should unlatch allowing the fuel filler door to open

Circuit/System Testing

1. Vehicle OFF, disconnect the harness connector at the S117 refuel request switch.
2. Verify that a test lamp illuminates between the B+ circuit terminal 1 and ground.
   If the test lamp does not illuminate, test the B+ circuit for a short to ground or an open/high resistance.
3. Connect the harness connector at the S117 refuel request switch.
4. Disconnect the X2 harness connector at the K114B hybrid powertrain control module 2.
5. Connect a test lamp between the signal circuit terminal 7 and ground.
6. Observe the function of the test lamp while pressing and releasing the S117 refuel request switch. The test lamp should turn ON each time the switch is pressed.
   If the test lamp is always ON, test the signal circuit for a short to voltage. If the circuit tests normal, test or replace the S117 refuel request switch.
   If the test lamp is always OFF, test the signal circuit for a short to ground or an open/high resistance. If the circuit tests normal, test or replace the S117 refuel request switch.
7. If all circuits test normal, replace the K114B hybrid powertrain control module 2.

Component Testing

1. Vehicle OFF, disconnect the harness connector at the S117 refuel request switch.
2. Test for infinite resistance between the signal terminal 1 and the B+ terminal 2 with the switch in the open position.
   If not the specified value, replace the S117 refuel request switch.
3. Test for less than 2 Ω between the signal terminal 1 and the B+ terminal 2 with the switch in the closed position.
   If greater than the specified range, replace the S117 refuel request switch.

Repair Instructions

Perform the Diagnostic Repair Verification after completing the diagnostic procedure.

- Fuel Tank Filler Door Lock Release Switch Replacement
- Control Module References for the hybrid powertrain control module 2 replacement, programming and setup

&#169© Copyright Chevrolet. All rights reserved

Symptoms - Vehicle Access

Note: The following steps must be completed before using the symptom tables.

1. Perform the Diagnostic System Check - Vehicle before using the Symptom Tables in order to verify that all of the following are true:
   - There are no DTCs set
   - The control modules can communicate via the serial data link
2. Review the system operation in order to familiarise yourself with the system functions. Refer to the following systems description:
   - Door Ajar Indicator Description and Operation
   - Rear Hatch/Gate Description and Operation
   - Power Door Locks Description and Operation
   - Tailgate Ajar Indicator Description and Operation
   - Fuel Fill Door Description and Operation
   - Charge Port Door Description and Operation

Visual/Physical Inspection

- Inspect for aftermarket devices which may affect the operation of the system. Refer to Checking Aftermarket Accessories .
- Inspect the easily accessible or visible system components for obvious damage or conditions which may cause the symptom.

Intermittent

Faulty electrical connections or wiring may be the cause of intermittent conditions. Refer to Testing for Intermittent Conditions and Poor Connections .

Symptom List

Refer to a symptom diagnostic procedure from the following list in order to diagnose the symptom:

- Power Door Lock Key Cylinder Switches Malfunction
- Door Ajar Indicator Malfunction
- Exterior Door Handle Switch Malfunction - DTC B1474, B1534, B1535, or B3849
- Power Door Locks Malfunction

- Power Door Child Lock Malfunction
- Hatch Release Malfunction
- Rear Hatch/Gate Ajar Indicator Malfunction
- Fuel Filler Door Release Malfunction
- Fuel Filler Door Ajar Indicator Malfunction
- Charger Door Release Malfunction
- Charger Door Ajar Indicator Malfunction

&#169© Copyright Chevrolet. All rights reserved

Charger Door Ajar Indicator Malfunction

Diagnostic Instructions

- Perform the Diagnostic System Check - Vehicle prior to using this diagnostic procedure.
- Review Strategy Based Diagnosis for an overview of the diagnostic approach.
- Diagnostic Procedure Instructions provides an overview of each diagnostic category.

Diagnostic Fault Information

Circuit	Short to Ground	Open/High Resistance	Short to Voltage	Signal Performance
Charge Port Door Sensor Signal	P0CCC 00	P0CCE 00	P0CCF 00	--
Ground	--	P0CCE 00	--	--

Circuit/System Description

The hybrid powertrain control module 2 provides a 5V signal through a pull-up resistor to the Charge Port Door Position Sensor Circuit. The other end of the Charge Port Door Position Sensor Circuit is connected to the Charge Port Door Position Switch. The hybrid powertrain control module 2 monitors the voltage on the Charge Port Door Position Sensor Circuit. In normal operation, the hybrid powertrain control module 2 sends a serial data message to the driver information centre in the instrument panel cluster to display the Charge Door Open message.

Reference Information

Schematic Reference

Plug-In Charging Schematics

Connector End View Reference

Component Connector End Views

Description and Operation

Charge Port Door Description and Operation

Electrical Information Reference

- Circuit Testing
- Connector Repairs
- Testing for Intermittent Conditions and Poor Connections
- Wiring Repairs

Scan Tool Reference

Control Module References for scan tool information

Circuit/System Verification

Vehicle in Service Mode, observe the scan tool Charge Port Door parameter while opening and closing the charge port door, the value should change between Open and Closed.

Circuit/System Testing

1. Vehicle OFF, disconnect the harness connector at the B197 charge port door position switch.
2. Test for less than 10 Ω between the ground circuit terminal C and ground.
   If greater than the specified range, test the ground circuit for an open/high resistance.
3. Vehicle in Service Mode, test for 4.75-5.25 V between the signal circuit terminal A and ground.
   If less than the specified range, test the signal circuit for a short to ground or an open/high resistance. If the circuit tests normal, replace the K114B hybrid powertrain control module 2.
   If greater than the specified range, test the signal circuit for a short to voltage. If the circuit tests normal, replace the K114B hybrid powertrain control module 2.
4. If all circuits test normal, test or replace the B197 charge port door position switch.

Component Testing

1. Vehicle OFF, disconnect the harness connector at the B197 charge port door position switch.
2. Test for 180 Ω--190 Ω between the signal terminal A and the ground terminal C with the switch in the open position.
   If not within the specified range, replace the B197 charge port door position switch.
3. Test for 2040 Ω--2065 Ω between the signal terminal A and the ground terminal C with the switch in the closed position.
   If not within the specified range, replace the B197 charge port door position switch.

Repair Instructions

Perform the Diagnostic Repair Verification after completing the diagnostic procedure.

- Charge Port Door Ajar Indicator Switch Replacement
- Control Module References for the hybrid powertrain control module 2 replacement, programming and setup

&#169© Copyright Chevrolet. All rights reserved

Charger Door Release Malfunction

Diagnostic Instructions

- Perform the Diagnostic System Check - Vehicle prior to using this diagnostic procedure.
- Review Strategy Based Diagnosis for an overview of the diagnostic approach.
- Diagnostic Procedure Instructions provides an overview of each diagnostic category.

Diagnostic Fault Information

Circuit	Short to Ground	Open/High Resistance	Short to Voltage	Signal Performance
Charge Port Relay B+	2	2	--	--
Charge Port Door Release Switch B+	1	1	--	--
Charge Port Door Wake-Up Signal	P0CC6 00	1	1	--
Charge Port Door Request Signal	P0CC9 00	P0CC7 00	P0CCA 00	-
Charge Port Relay Control	P0CD1 00	2	2	--
Charge Port Door Release Actuator Control	2	2	2	--
Charge Port Release Switch Low Reference	1	P0CC7 00	P0CC7 00	-
Charge Port Door Release Actuator Ground	--	2	--	--
Charge Port Relay Ground	--	2	--	--
1. Charge Port Door Switch Malfunction 2. Charge Port Door Latch Malfunction				

Circuit/System Description

The hybrid powertrain control module 2 monitors the voltage values of the charge port wake-up signal circuit and the charge port request signal circuit. When the charge port door release switch is pressed, the two switch contacts close and provides B+ voltage to the two signal circuits. This provides B+ to the Wake-up Circuit input of the hybrid powertrain control module 2and lowers the voltage on the fuel door request signal circuit input to the hybrid powertrain control module 2, The hybrid powertrain control module 2 detects the voltage on the signal circuits and provides a 12V pulse to the charge port relay, the relay briefly becomes energised which then allows B+ voltage to the charge port door latch which activates and releases the charge port door.

Reference Information

Schematic Reference

Plug-In Charging Schematics

Connector End View Reference

Component Connector End Views

Description and Operation

Charge Port Door Description and Operation

Electrical Information Reference

- Circuit Testing
- Connector Repairs
- Testing for Intermittent Conditions and Poor Connections
- Wiring Repairs

Scan Tool Reference

Control Module References for scan tool information

Circuit/System Verification

1. Vehicle in Service Mode, command the M80 charge port door actuator to UNLATCH with the scan tool, the M80 charge port door actuator should unlatch and the charge port door should open.
   If the M80 charge port door actuator does not perform as specified, refer to Charge Port Door Actuator Malfunction.
2. Command the M80 charge port door actuator to UNLATCH by pressing the S113 charge port door open request switch, the M80 charge port door actuator should unlatch and the charge port door should open.
   If charge port door does not open, refer to Charge Port Door Switch Malfunction.

Circuit/System Testing

Charge Port Door Actuator Malfunction

1. Vehicle OFF, disconnect the KR119 charge port door relay.
2. Test for less than 10 Ω between the ground circuit terminal 85 and ground.
   If greater than the specified range, test the ground circuit for an open/high resistance.
3. Vehicle in Service Mode, verify that a test lamp does not illuminate between the control circuit terminal 30 and ground.
   If the test lamp illuminates, test the control circuit for a short to voltage.
4. Verify that a test lamp illuminates between the B+ circuit terminal 87 and ground.
   If the test lamp does not illuminate, test the B+ circuit for a short to ground or an open/high resistance. If the circuit tests normal and the B+ circuit fuse is open, test the control circuit terminal 30 for a short to ground.
5. Vehicle OFF, disconnect the harness connector at the M80 charge port door actuator.
6. Test for less than 10 Ω between the ground circuit terminal 1 and ground.
   If greater than the specified range, test the ground circuit for an open/high resistance.
7. Connect the harness connector at the M80 charge port door actuator.
8. Vehicle in Service Mode, connect a 10 A fused jumper wire between the B+ circuit terminal 87 and the control circuit terminal 30. Verify the M80 charge port door actuator is activated.
   If the M80 charge port door actuator does not activate, test the control circuit for an open/high resistance. If the circuit tests normal, test or replace the M80 charge port door actuator.
9. Connect a test lamp between the control circuit terminal 86 and the ground circuit terminal 85.
10. Command the Activate Charge Port Solenoid with a scan tool. The test lamp should turn ON while commanding the solenoid.
    If the test lamp is always ON, test the control circuit for a short to voltage. If the circuit tests normal, replace the K114B hybrid powertrain control module 2.
    If the test lamp is always OFF, test the control circuit for a short to ground or an open/high resistance. If the circuit tests normal, replace the K114B hybrid powertrain control module 2.
11. If all circuits test normal, test or replace the KR119 charge port door relay.

Charge Port Door Switch Malfunction

1. Vehicle OFF, disconnect the harness connector at the S113 charge port door open request switch.
2. Verify that a test lamp illuminates between the B+ circuit terminal 1 and ground.
   If the test lamp does not illuminate, test the B+ circuit for a short to ground or an open/high resistance.
3. Connect the harness connector at the S113 charge port door open request switch.
4. Disconnect the X2 harness connector at the K114B hybrid powertrain control module 2.
5. Connect a test lamp between the signal circuit terminal 29 and ground.
6. Observe the function of the test lamp while pressing and releasing the S113 charge port door open request switch. The test lamp should turn ON each time the switch is pressed.
   If the test lamp is always ON, test the signal circuit for a short to voltage. If the circuit tests normal, test or replace the S113 charge port door open request switch.
   If the test lamp is always OFF, test the signal circuit for a short to ground or an open/high resistance. If the circuit tests normal, test or replace the S113 charge port door open request switch.
7. If all circuits test normal, replace the K114B hybrid powertrain control module 2.

Component Testing

Charge Port Door Release Actuator

1. Vehicle OFF, disconnect the harness connector at the M80 charge port door actuator.
2. Install a 20 A fused jumper wire between the control terminal 2 and 12 V. Briefly install a jumper wire between the ground terminal 1 and ground. Verify the M80 charge port door actuator activates.
   If the actuator does not perform as specified, replace the M80 charge port door actuator.

Charge Port Door Release Switch

1. Vehicle OFF, disconnect the harness connector at the S113 charge port door open request switch.
2. Test for infinite resistance between the B+ terminal 1 and the signal terminal 2 with the switch in the open position.
   If not the specified value, replace the S113 charge port door open request switch.
3. Test for less than 2 Ω between the B+ terminal 1 and the signal terminal 2 while pressing the S113 charge port door open request switch.
   If greater than the specified range, replace the S113 charge port door open request switch.

Relay Test

1. Vehicle OFF, disconnect the KR119 charge port door relay.
2. Test for 60-180 Ω between terminals 85 and 86.
   If not within the specified range, replace the KR119 charge port door relay.
3. Test for infinite resistance between the following terminals:
   - 30 and 86
   - 30 and 87
   - 30 and 85
   - 85 and 87

   If not the specified value, replace the KR119 charge port door relay.
4. Install a 5 A fused jumper wire between relay terminal 85 and 12 V. Install a jumper wire between relay terminal 86 and ground. Test for less than 2 Ω between terminals 30 and 87.
   If greater than the specified range, replace the KR119 charge port door relay.

Repair Instructions

Perform the Diagnostic Repair Verification after completing the diagnostic procedure.

- Relay Replacement : Within an Electrical Centre → Attached to Wire Harness
- Charge Port Door Actuator Replacement
- Charger Door Release Switch Replacement
- Control Module References for hybrid powertrain control module 2 replacement, programming and setup

&#169© Copyright Chevrolet. All rights reserved

Exterior Door Handle Switch Malfunction - DTC B1474, B1534, B1535, or B3849

Diagnostic Instructions

- Perform the Diagnostic System Check - Vehicle prior to using this diagnostic procedure.
- Review Strategy Based Diagnosis for an overview of the diagnostic approach.
- Diagnostic Procedure Instructions provides an overview of each diagnostic category.

DTC Descriptors

DTC B1474 02: Passenger Exterior Door Handle Switch Circuit Short to Ground

DTC B1534 02: Left Rear Door Handle Switch Circuit Short to Ground

DTC B1535 02: Right Rear Door Handle Switch Circuit Short to Ground

DTC B3849 02: Driver Exterior Door Handle Switch Circuit Short to Ground

Diagnostic Fault Information

Circuit	Short to Ground	Open/High Resistance	Short to Voltage	Signal Performance
Driver Door Handle Switch Signal	B3849 02	1	1	--
Passenger Door Handle Switch Signal	B1474 02	2	2	--
Left Rear Door Handle Switch Signal	B1534 02	3	3	--
Right Rear Door Handle Switch Signal	B1535 02	4	4	-
Driver Door Handle Switch Ground	--	1	--	--
Passenger Door Handle Switch Ground	--	2	--	--
Left Rear Door Handle Switch Ground	--	3	--	--
Right Rear Door Handle Switch Ground	--	4	--	--
1. Driver Door Handle Switch Malfunction				

2. Passenger Door Handle Switch Malfunction

3. Left Rear Door Handle Switch Malfunction

4. Right Rear Door Handle Switch Malfunction

Circuit/System Description

The exterior door handle switch signal circuits provide inputs to the keyless entry control module when the exterior door handle switches are activated. These inputs allow the keyless entry control module to detect a door unlock request. The keyless entry control module provides a 12 V signal to each exterior door handle switch via the door handle switch signal circuits. When a door handle switch is pressed, the switch closes and the voltage signals from the keyless entry control module are pulled to ground.

Conditions for Running the DTC

Battery voltage is between 9-16 V.

Conditions for Setting the DTC

B1474 02

The keyless entry control module detects the passenger exterior door handle switch signal circuit is shorted to ground or closed for greater than 180 s

B1534 02

The keyless entry control module detects the left rear exterior door handle switch signal circuit is short-circuited to ground or closed for more than 180 s.

B1535 02

The keyless entry control module detects the right rear exterior door handle switch signal circuit is short-circuited to ground or closed for more than 180 s.

B3849 02

The keyless entry control module detects the driver exterior door handle switch signal circuit is short-circuited to ground or closed for more than 180 s.

Action Taken When the DTC Sets

The keyless entry control module will ignore input from the affected door switch and the door will not unlock when the door handle switch is pressed.

Conditions for Clearing the DTC

- The DTC will be current for as long as the fault is present.
- When the fault is no longer present, the DTC will be a history DTC.
- A history DTC will clear after 40 ignition cycles.

Reference Information

Schematic Reference

Door Lock/Indicator Schematics

Connector End View Reference

Component Connector End Views

Description and Operation

Keyless Entry System Description and Operation

Electrical Information Reference

- Circuit Testing
- Connector Repairs
- Testing for Intermittent Conditions and Poor Connections
- Wiring Repairs

Scan Tool Reference

Control Module References for scan tool information

Circuit/System Verification

Vehicle in Service Mode, observe the scan tool keyless entry control module Exterior Driver Door Handle Switch, Exterior Passenger Door Handle Switch, Exterior Left Rear Door Handle Switch and Exterior Right Rear Door Handle Switch parameters while pressing and releasing each exterior door handle switch. The parameter for each should change between Active and Inactive

Circuit/System Testing

1. Vehicle OFF, disconnect the harness connector at the appropriate exterior A24 door handle assembly.
2. Test for less than 5 Ω between the ground circuit terminal 4 and ground.

If greater than the specified range, test the ground circuit for an open/high resistance.

3. Vehicle in Service Mode, verify the appropriate scan tool Exterior Door Handle Switch parameter is Inactive.
   If not the specified value, test the signal circuit terminal 3 for a short to ground. If the circuit tests normal, replace the K84 keyless entry control module.
4. Install a 3 A fused jumper wire between the signal circuit terminal 3 and the ground circuit terminal 4. Verify the scan tool Exterior Door Handle Switch parameter is Active.
   If not the specified value, test the signal circuit for a short to voltage or an open/high resistance. If the circuit tests normal, replace the K84 keyless entry control module
5. If all circuits test normal, test or replace the A24 door handle assembly.

Component Testing

Exterior Door Handle Switch Test

1. Vehicle OFF, disconnect the harness connector at the appropriate exterior A24 door handle assembly.
2. With the switch in the open position, test for infinite resistance between the signal terminal 3 and the ground terminal 4.
   If not the specified value, replace the exterior A24 door handle assembly.
3. With the switch in the closed position, test for less than 5 Ω between the signal terminal 3 and the ground terminal 4.
   If greater than the specified range, replace the exterior A24 door handle assembly.

Repair Instructions

Perform the Diagnostic Repair Verification after completing the repair.

- Front Side Door Outside Handle Replacement : Pass Key Entry ATH → Base
- Rear Side Door Outside Handle Replacement
- Control Module References for keyless entry control module replacement, programming and setup

&#169© Copyright Chevrolet. All rights reserved

Fuel Filler Door Ajar Indicator Malfunction

Diagnostic Instructions

- Perform the Diagnostic System Check - Vehicle prior to using this diagnostic procedure.
- Review Strategy Based Diagnosis for an overview of the diagnostic approach.
- Diagnostic Procedure Instructions provides an overview of each diagnostic category.

Diagnostic Fault Information

Circuit	Short to Ground	Open/High Resistance	Short to Voltage	Signal Performance
Fuel Door Position Sensor Signal	P04B9 00	P04B9 00	P04BA 00	P04DC 00
Fuel Door Status Switch Ground	-	P04B9 00	--	--

Circuit/System Description

The hybrid powertrain control module 2 provides a 5V signal through a pull-up resistor to the Fuel Door Position Sensor Circuit. The other end of the Fuel Door Position Sensor Circuit is connected to the Fuel Door Position Sensor in the Fuel Door Status Switch Assembly. The hybrid powertrain control module 2 monitors the voltage on the Fuel Door Position Sensor Circuit. In normal operation, when the Fuel Door moves to the open position, the switch in the Fuel Door Lock Position closes and lowers the voltage on the Fuel Door Lock Position Sensor Circuit.

Reference Information

Schematic Reference

Release Systems Schematics : Tailgate Schematics → Release System Schematics

Connector End View Reference

Component Connector End Views

Description and Operation

Fuel Fill Door Description and Operation

Electrical Information Reference

- Circuit Testing
- Connector Repairs
- Testing for Intermittent Conditions and Poor Connections
- Wiring Repairs

Scan Tool Reference

Control Module References for scan tool information

Circuit/System Verification

Vehicle in Service Mode, transmission selector in Park, observe the scan tool Fuel Door Position parameter while opening and closing the fuel filler door, the value should change between Open and Closed.

Circuit/System Testing

1. Vehicle OFF, disconnect the harness connector at the B208 fuel door status switch assembly.
2. Test for less than 10 Ω between the ground circuit terminal 2 and ground.
   If greater than the specified range, test the ground circuit for an open/high resistance.
3. Vehicle in Service Mode, test for 4.75 -- 5.25 V between the signal circuit terminal 1 and ground.
   If less than the specified range, test the signal circuit for a short to ground or an open/high resistance. If the circuit tests normal, replace the K114B hybrid powertrain control module 2.
   If greater than the specified range, test the signal circuit for a short to voltage. If the circuit tests normal, replace the K114B hybrid powertrain control module 2.
4. If all circuits test normal, test or replace the B208 fuel door status switch assembly.

Component Testing

1. Vehicle OFF, disconnect the harness connector at the B208 fuel door status switch assembly.
2. Test for 180 Ω--190 Ω between the signal terminal 1 and the ground terminal 2 with the switch in the open position.
   If not within the specified range, replace the B208 fuel door status switch assembly.
3. Test for 2040 Ω--2065 Ω between the signal terminal 1 and the ground terminal 2 with the switch in the closed position.
   If not within the specified range, replace the B208 fuel door status switch assembly.

Repair Instructions

Perform the Diagnostic Repair Verification after completing the diagnostic procedure.

Control Module References for the hybrid powertrain control module 2 replacement, programming and setup

&#169© Copyright Chevrolet. All rights reserved

Fuel Filler Door Release Malfunction

Diagnostic Instructions

- Perform the Diagnostic System Check - Vehicle prior to using this diagnostic procedure.
- Review Strategy Based Diagnosis for an overview of the diagnostic approach.
- Diagnostic Procedure Instructions provides an overview of each diagnostic category.

Diagnostic Fault Information

Circuit	Short to Ground	Open/High Resistance	Short to Voltage	Signal Performance
Refuel Request Switch B+	P04CA 00	P04CA 00	--	--
Fuel Fill Door Lock/Unlock Sensor Signal	P04C5 00	P04C5 00	P04C6 00	P04C4 00
Refuel Request Wakeup Signal	P169D 00	P169D 00	P169D 00	-
Refuel Request Signal	P04CA 00	P04CA 00	P04CB 00	-
Fuel Fill Door Lock Control	P04BB 00	P04BB 00	P04BB 00	P04BC 00
Fuel Fill Door Unlock Control	P04BB 00	P04BB 00	P04BB 00	P04C0 00
Refuel Request Switch Low Reference	-	P04CA 00	--	--
Fuel Fill Door Position Sensor Ground	-	P04C5 00	--	--

Circuit/System Description

The hybrid powertrain control module 2 monitors the voltage values of the fuel fill door open request wake-up signal circuit and the fuel door request signal circuit. When the refuel request switch is pressed, the two switch contacts close. This provide B+ to the Wake-up Circuit input of the hybrid powertrain control module 2 and lowers the voltage on the fuel door request signal circuit input to the hybrid powertrain control module 2. The hybrid powertrain control module 2 detects the voltage on the signal circuits and commands the fuel system to vent and sends a serial data message to the driver information centre to display the Wait to Refuel message. The hybrid powertrain control module 2 then energises the fuel door lock/unlock actuator to unlock the fuel door.

Reference Information

Schematic Reference

Connector End View Reference

Component Connector End Views

Description and Operation

Fuel Fill Door Description and Operation

Electrical Information Reference

- Circuit Testing
- Connector Repairs
- Testing for Intermittent Conditions and Poor Connections
- Wiring Repairs

Scan Tool Reference

Control Module References for scan tool information

Circuit/System Verification

1. Command the fuel filler door to LOCK and UNLOCK with the scan tool, the M97 fuel door lock actuator should LOCK and UNLOCK while changing between the commanded states.
   If the fuel filler door does not perform as specified, refer to Fuel Filler Door Lock Malfunction.
2. Command the fuel filler door to UNLOCK by pressing the S117 refuel request switch, the M97 fuel door lock actuator should UNLOCK allowing the fuel filler door to open.
   If the fuel filler door does not perform as specified, refer to Refuel Request Switch Malfunction.
3. With the fuel filler door locked, verify that the scan tool Fuel Door Lock parameter is Locked.
   If not the specified value, refer to Fuel Door Lock Position Sensor Malfunction.
4. With the fuel filler door unlocked, verify that the scan tool Fuel Door Lock parameter is Unlocked.
   If not the specified value, refer to Fuel Door Lock Position Sensor Malfunction.

Circuit/System Testing

Fuel Filler Door Lock Malfunction

1. Vehicle OFF, disconnect the harness connector at the M97 fuel door lock actuator.

2. Vehicle in Service Mode, verify that a test lamp illuminates between the control circuit terminal 1 and ground.
   If the test lamp is OFF, test the control circuit for a short to ground or an open/high resistance. If the circuit tests normal, replace the K114B hybrid powertrain control module 2.
3. Verify that a test lamp illuminates between the control circuit terminal 2 and ground.
   If the test lamp is OFF, test the control circuit for a short to ground or an open/high resistance. If the circuit tests normal, replace the K114B hybrid powertrain control module 2.
4. Connect a test lamp between the control circuit terminal 1 and the control circuit terminal 2
5. Vehicle in Service Mode, command the fuel door to LOCK and UNLOCK with a scan tool. The test lamp should briefly illuminate while changing between the commanded states.
   If the test lamp is always OFF, test both control circuits for a short to voltage. If the circuits test normal, replace the K114B hybrid powertrain control module 2.
6. If all circuits test normal, test or replace the M97 fuel door lock actuator.

Refuel Request Switch Malfunction

1. Vehicle OFF, disconnect the harness connector at the S117 refuel request switch.
2. Verify that a test lamp illuminates between the B+ circuit terminal 1 and ground.
   If the test lamp does not illuminate, test the B+ circuit for a short to ground or an open/high resistance.
3. Connect the harness connector at the S117 refuel request switch.
4. Disconnect the X2 harness connector at the K114B hybrid powertrain control module 2.
5. Connect a test lamp between the signal circuit terminal 7 and ground.
6. Observe the function of the test lamp while pressing and releasing the S117 refuel request switch. The test lamp should turn ON each time the switch is pressed.
   If the test lamp is always ON, test the signal circuit for a short to voltage. If the circuit tests normal, test or replace the S117 refuel request switch.
   If the test lamp is always OFF, test the signal circuit for a short to ground or an open/high resistance. If the circuit tests normal, test or replace the S117 refuel request switch.
7. If all circuits test normal, replace the K114B hybrid powertrain control module 2.

Fuel Door Lock Position Sensor Malfunction

1. Vehicle OFF, disconnect the harness connector at the B208 fuel door status switch assembly.
2. Test for less than 10 Ω between the ground circuit terminal 4 and ground.
   If greater than the specified range, test the ground circuit for an open/high resistance.
3. Vehicle in Service Mode, test for 4.75 -- 5.25 V between the signal circuit terminal 3 and ground.
   If less than the specified range, test the signal circuit for a short to ground or an open/high resistance. If the circuit tests normal, replace the K114B hybrid powertrain control module 2.
   If greater than the specified range, test the signal circuit for a short to voltage. If the circuit tests normal, replace the K114B hybrid powertrain control module 2.
4. If all circuits test normal, test or replace the B208 fuel door status switch assembly.

Component Testing

1. Vehicle OFF, disconnect the harness connector at the M97 fuel door lock actuator
2. Install a 25 A fused jumper wire between one of the control terminals and 12 V. Momentarily install a jumper wire between the other control terminal and ground. Reverse the jumper wires at least two times, the M97 fuel door lock actuator should perform the LOCK and UNLOCK functions.
   If it does not perform as specified, replace the M97 fuel door lock actuator

Repair Instructions

Perform the Diagnostic Repair Verification after completing the diagnostic procedure.

- Fuel Tank Filler Door Lock Actuator Replacement
- Fuel Tank Filler Door Lock Release Switch Replacement
- Control Module References for the hybrid powertrain control module 2 replacement, programming and setup

&#169© Copyright Chevrolet. All rights reserved

Hatch Release Malfunction

Diagnostic Instructions

- Perform the Diagnostic System Check - Vehicle prior to using this diagnostic procedure.
- Review Strategy Based Diagnosis for an overview of the diagnostic approach.
- Diagnostic Procedure Instructions provides an overview of each diagnostic category.

Diagnostic Fault Information

Circuit	Short to Ground	Open/High Resistance	Short to Voltage	Signal Performance
Tailgate Release Relay B+	2	2	--	--
Rear Closure Handle Switch Open Signal	B3618 00	1	1	--
Rear Closure Relay Control	B3265 02	2	2	--
Tailgate Latch Control	2	2	2	--
Tailgate Handle Switch Ground	--	1	--	--
Tailgate Latch Ground	--	2	2	--
Tailgate Release Relay Ground	--	2	2	--
1. Rear Compartment Lid Release Switch Malfunction 2. Rear Compartment Lid Release Malfunction				

Circuit/System Description

The BCM supplies a reference voltage to the tailgate handle switch through the rear closure handle switch open signal circuit. When the tailgate handle switch is operated, the rear closure handle switch open signal circuit is grounded through the tailgate handle switch ground circuit and the reference voltage is pulled low within the BCM. In response, the BCM applies battery positive voltage to the tailgate release relay control circuit, which energises the coil side of the tailgate release relay. The switch side of the tailgate release relay then closes, supplying battery positive voltage through the relay and the tailgate latch control circuit activating the latch so that the rear hatch may be manually raised to an open position.

Reference Information

Schematic Reference

Release Systems Schematics : Tailgate Schematics → Release System Schematics

Connector End View Reference

Component Connector End Views

Description and Operation

Rear Hatch/Gate Description and Operation

Electrical Information Reference

- Circuit Testing
- Connector Repairs
- Testing for Intermittent Conditions and Poor Connections
- Wiring Repairs

Scan Tool Reference

Control Module References for scan tool information

Circuit/System Verification

1. Vehicle in Service Mode, observe the scan tool Boot Lid/Liftglass Exterior Unlatch Switch parameter while pressing and releasing the S46 tailgate handle switch. The parameter should change between Active and Inactive.
   If the value does not change, refer to Tailgate Handle Switch Inoperative.
2. Command the rear hatch to release with a scan tool, the A23C tailgate latch assembly should release the rear hatch.
   If the A23C tailgate latch assembly does not release the rear hatch, refer to Release Actuator Inoperative.

Circuit/System Testing

Tailgate Handle Switch Inoperative

1. Vehicle OFF, disconnect the harness connector at the S46 tailgate handle switch.
2. Test for less than 10 Ω between the ground circuit terminal 2 and ground.
   If greater than the specified range, test the ground circuit for an open/high resistance.
3. Vehicle in Service Mode, verify the scan tool Boot Lid/Liftglass Exterior Unlatch Switch parameter is Inactive.

If not the specified value, test the signal circuit terminal 1 for a short to ground. If the circuit tests normal, replace the K9 BCM.

4. Install a 3 A fused jumper wire between the signal circuit terminal 1 and ground. Verify the scan tool Boot Lid/Liftglass Exterior Unlatch Switch parameter is Active.
   If not the specified value, test the signal circuit for a short to voltage or an open/high resistance. If the circuit tests normal, replace the K9 BCM.
5. If all circuits test normal, test or replace the S46 tailgate handle switch.

Release Actuator Inoperative

1. Vehicle OFF, disconnect the KR95A tailgate release relay.
2. Test for less than 10 Ω between the ground circuit terminal 48 and ground.
   If greater than the specified range, test the ground circuit for an open/high resistance.
3. Vehicle in Service Mode, verify that a test lamp does not illuminate between the control circuit terminal 45 and ground.
   If the test lamp illuminates, test the control circuit for a short to voltage.
4. Verify that a test lamp illuminates between the B+ circuit terminal 46 and ground.
   If the test lamp does not illuminate, test the B+ circuit for an open/high resistance.
5. Vehicle OFF, disconnect the harness connector at the A23C tailgate latch assembly.
6. Test for less than 10 Ω between the ground circuit terminal 1 and ground.
   If greater than the specified range, test the ground circuit for an open/high resistance.
7. Connect the harness connector at the A23C tailgate latch assembly.
8. Vehicle in Service Mode, connect a 10 A fused jumper wire between the B+ circuit terminal 46 and the control circuit terminal 45. Verify the A23C tailgate latch assembly is activated.
   If the A23C tailgate latch assembly does not activate and the circuit fuse is good, test the control circuit for an open/high resistance. If the circuit tests normal, test or replace the A23C tailgate latch assembly.
   If the A23C tailgate latch assembly does not activate and the circuit fuse is open, test the control circuit for a short to ground. If the circuit tests normal, test or replace the A23C tailgate latch assembly.
9. Connect a test lamp between the control circuit terminal 44 and the ground circuit terminal 48.
10. Command the Boot Lid Unlatch to UNLATCH with a scan tool. The test lamp should turn ON during the UNLATCH command.
    If the test lamp is always ON, test the control circuit for a short to voltage. If the circuit tests normal, replace the K9 BCM.
    If the test lamp is always OFF, test the control circuit for a short to ground or an open/high resistance. If the circuit tests normal, replace the K9 BCM.
11. If all circuits test normal, test or replace the KR95A tailgate release relay.

Component Testing

Relay Test

1. Vehicle OFF, disconnect the KR95A tailgate release relay.
2. Test for 60-200 Ω between terminals 85 and 86.
   If not within the specified range, replace the KR95A tailgate release relay.
3. Test for infinite resistance between the following terminals:
   - 30 and 86

- 30 and 87
- 30 and 85
- 85 and 87

  If less than the specified value, replace the KR95A tailgate release relay.

4. Install a 3A fused jumper wire between relay terminal 85 and 12 V. Install a jumper wire between relay terminal 86 and ground. Test for less than 2 Ω between terminals 30 and 87.
   If greater than the specified range, replace the KR95A tailgate release relay.

Rear Compartment Lid Latch

1. Vehicle OFF, disconnect the harness connector at the A23C tailgate latch assembly.
2. Install a 10 A fused jumper wire between the control terminal 3 and 12 V. Briefly install a jumper wire between the ground terminal 1 and ground. Verify the A23C tailgate latch assembly activates.
   If the latch does not perform as specified, replace the A23C tailgate latch assembly.

Tailgate Handle Switch

1. Vehicle OFF, disconnect the harness connector at the S46 tailgate handle switch.
2. Test for infinite resistance between the signal terminal 1 and the ground terminal 2 with the switch in the open position.
   If not the specified value, replace the S46 tailgate handle switch.
3. Test for less than 2 Ω between the signal terminal 1 and the ground terminal 2 with the switch in the closed position.
   If greater than the specified range, replace the S46 tailgate handle switch.

Repair Instructions

Perform the Diagnostic Repair Verification after completing the diagnostic procedure.

- Relay Replacement : Within an Electrical Centre → Attached to Wire Harness
- Tailgate Latch Replacement
- Tailgate Release Switch Replacement
- Control Module References for BCM replacement, programming and setup

&#169© Copyright Chevrolet. All rights reserved

Door Ajar Indicator Malfunction

Diagnostic Instructions

- Perform the Diagnostic System Check - Vehicle prior to using this diagnostic procedure.
- Review Strategy Based Diagnosis for an overview of the diagnostic approach.
- Diagnostic Procedure Instructions provides an overview of each diagnostic category

Diagnostic Fault Information

Circuit	Short to Ground	Open/High Resistance	Short to Voltage	Signal Performance
Left Front Door Ajar Switch Signal	1	2	1	--
Left Rear Door Ajar Switch Signal	1	2	1	--
Right Front Door Ajar Switch Signal	1	2	1	--
Right Rear Door Ajar Switch Signal	1	2	1	--
Driver Door Latch Ground	--	2	--	--
Passenger Door Latch Ground	--	2	--	--
Left Rear Door Latch Ground	--	2	--	--
Right Rear Door Latch Ground	--	2	--	--
1. Ajar Indicator Always Illuminated 2. Ajar Indicator Inoperative				

Circuit/System Description

The driver window motor, the passenger window switch, left rear and right rear window switch each supplies a 12V signal to each of their respective door ajar switches. The door ajar switches are integral to each door latch assembly. When a door is opened, the normally open door ajar switch closes. With the door ajar switch closed, ground is provided to the door ajar switch signal circuit. The window motor and/or window switch interprets this and communicates door status via serial data to the BCM.

Reference Information

Schematic Reference

Door Lock/Indicator Schematics

Connector End View Reference

Component Connector End Views

Description and Operation

Door Ajar Indicator Description and Operation

Electrical Information Reference

- Circuit Testing
- Connector Repairs
- Testing for Intermittent Conditions and Poor Connections
- Wiring Repairs

Scan Tool Reference

Control Module References for scan tool information

Circuit/System Verification

1. Vehicle in Service Mode, observe the scan tool Driver Door Ajar Switch parameter while opening and closing the driver door. The parameter should change between Active and Inactive.
   If the value does not change, refer to Driver Door Ajar Switch Malfunction.
2. Observe the scan tool Passenger Door Ajar Switch parameter while opening and closing the front passenger door. The parameter should change between Active and Inactive.
   If the value does not change, refer to Passenger Door Ajar Switch Malfunction.
3. Observe the scan tool Left Rear Door Ajar Switch and Right Rear Door Ajar Switch parameters while opening and closing the left and right rear doors. The value should change between Inactive and Active.
   If a value does not change, refer to Rear Door Ajar Switch Malfunction.

Circuit/System Testing

Driver Door Ajar Switch Malfunction

1. Vehicle OFF, disconnect the harness connector at the A23D door latch assembly - driver.

2. Test for less than 10 Ω between the ground circuit terminal 8 and ground.
   If greater than the specified range, test the ground circuit for an open/high resistance.
3. Vehicle in Service Mode, verify the scan tool Driver Door Ajar Switch parameter is Inactive.
   If not the specified value, test the signal circuit terminal 6 for a short to ground. If the circuit tests normal, replace the M74D window motor - driver.
4. Install a 3 A fused jumper wire between the signal circuit terminal 6 and ground. Verify the scan tool Driver Door Ajar Switch parameter is Active.
   If not the specified value, test the signal circuit for a short to voltage or an open/high resistance. If the circuit tests normal, replace the M74D window motor - driver.
5. If all circuits test normal, test or replace the A23D door latch assembly - driver.

Passenger Door Ajar Switch Malfunction

1. Vehicle OFF, disconnect the harness connector at the A23P door latch assembly - passenger.
2. Test for less than 10 Ω between the ground circuit terminal 3 and ground.
   If greater than the specified range, test the ground circuit for an open/high resistance.
3. Vehicle in Service Mode, verify the scan tool Passenger Door Ajar Switch parameter is Inactive.
   If not the specified value, test the signal circuit terminal 1 for a short to ground. If the circuit tests normal, replace the S79P Window Switch - Passenger.
4. Install a 3 A fused jumper wire between the signal circuit terminal 1 and ground. Verify the scan tool Passenger Door Ajar Switch parameter is Active.
   If not the specified value, test the signal circuit for a short to voltage or an open/high resistance. If the circuit tests normal, replace the S79P Window Switch - Passenger.
5. If all circuits test normal, test or replace the A23P door latch assembly - passenger.

Rear Door Ajar Switch Malfunction

1. Vehicle OFF, disconnect the harness connector at the appropriate rear A23 door latch.
2. Test for less than 10 Ω between the ground circuit terminal listed below and ground:
   - Left rear door latch ground circuit terminal 8
   - Right rear door latch ground circuit terminal 3

   If greater than the specified range, test the ground circuit for an open/high resistance.
3. Vehicle in Service Mode, verify the appropriate scan tool Rear Door Ajar Switch parameter is Inactive.
   If not the specified value, test the signal circuit terminal listed below for a short to ground. If the circuit tests normal, replace the rear S79 window switch.
   - Left rear door ajar switch signal circuit terminal 6
   - Right rear door ajar switch signal circuit terminal 1
4. Install a 3 A fused jumper wire between the signal circuit terminal listed below and ground. Verify the scan tool Rear Door Ajar Switch parameter is Active.
   - Left rear door ajar switch signal circuit terminal 6
   - Right rear door ajar switch signal circuit terminal 1

   If not the specified value, test the signal circuit terminal listed below for an open/high resistance. If the circuit tests normal, replace the rear S79 window switch.
5. If all circuits tests normal, test or replace the rear A23 door latch.

Component Testing

Static Test

1. Vehicle OFF, disconnect the harness connector at the appropriate A23 door latch.
2. With the switch in the open position, test for infinite resistance between the signal and the ground terminals listed below:
   - Driver door latch signal terminal 6 and ground terminal 8
   - Left rear door latch signal terminal 6 and ground terminal 8
   - Right rear door latch signal terminal 1 and ground terminal 3
   - Passenger door latch signal terminal 1 and ground terminal 3

   If not the specified value, replace the A23 door latch.
3. With the switch in the closed position, test for less than 5 Ω between the signal and the ground terminals listed below:
   - Driver door latch signal terminal 6 and ground terminal 8
   - Left rear door latch signal terminal 6 and ground terminal 8
   - Right rear door latch signal terminal 1 and ground terminal 3
   - Passenger door latch signal terminal 1 and ground terminal 3

   If greater than the specified range, replace the A23 door latch.

Repair Instructions

Perform the Diagnostic Repair Verification after completing the diagnostic procedure.

- Front Side Door Lock Replacement
- Rear Side Door Lock Replacement
- Front Side Door Window Switch Replacement
- Rear Side Door Window Switch Replacement
- Front Side Door Window Regulator Motor Replacement
- Control Module References for BCM replacement, programming and setup

&#169© Copyright Chevrolet. All rights reserved

Power Door Child Lock Malfunction

Diagnostic Instructions

- Perform the Diagnostic System Check - Vehicle prior to using this diagnostic procedure.
- Review Strategy Based Diagnosis for an overview of the diagnostic approach.
- Diagnostic Procedure Instructions provides an overview of each diagnostic category.

Diagnostic Fault Information

Circuit	Short to Ground	Open/High Resistance	Short to Voltage	Signal Performance
Door Lock Security Relay Control	B3930 02	1	1	--
Left Rear Door Latch Control	B3125 02, B3130 02, B3135 02	1	1	--
Right Rear Door Latch Control	B3125 02, B3130 02, B3135 02	1	1	--
Under-bonnet Fuse Block Ground	--	1	--	--
1. Child Door Lockout Malfunction				

Circuit/System Description

The child door lockout switch is on the driver door lock/window switch and controls the child locks on the rear doors as well as the rear window switches. When the BCM receives a command from the window lockout switch, it will apply voltage to the door lock security relay coil, this will energise the relay and the contact within the relay will then direct the voltage to lock the left rear and right rear child locks and then isolate them from the normal door lock system to prevent the rear doors from being opened by using the interior rear door handles.

Reference Information

Schematic Reference

Door Lock/Indicator Schematics

Connector End View Reference

Component Connector End Views

Description and Operation

Power Door Locks Description and Operation

Electrical Information Reference

- Circuit Testing
- Connector Repairs
- Testing for Intermittent Conditions and Poor Connections
- Wiring Repairs

Scan Tool Reference

Control Module References for scan tool information

Circuit/System Verification

1. Vehicle in Service Mode, observe the scan tool Window Lockout Switch parameter while pressing the window lockout switch on the S79D window switch-driver. The value should change from Inactive to Active each time the switch is pressed.
   If the value is always Inactive or always Active, replace the S79D window switch-driver.
2. Command the doors to LOCK and UNLOCK with the scan tool, all doors should LOCK and UNLOCK while changing between the commanded states.
   If either rear door does not LOCK or UNLOCK, refer to Power Door Locks Malfunction .
3. With all the doors locked, command the child security lockout by pressing the window lockout switch on the S79D window switch-driver, the interior rear door handles should not open the doors when used.
   If both interior rear door handles continue to function, refer to Child Security Door Lockout Inoperative.
   If the left or right interior rear door handles continue to function, refer to Child Security Door Lockout Malfunction.

Circuit/System Testing

Child Security Door Lockout Inoperative

1. Vehicle OFF, disconnect the X3 harness connector at the X50A fuse block-under-bonnet.
2. Test for less than 10 Ω between the ground circuit terminal 48 and ground.
   If greater than the specified range, test the ground circuit for an open/high resistance.
3. Vehicle OFF, connect the X3 harness connector and disconnect the X1 harness connector at the X50A fuse block-under-bonnet
4. Connect a test lamp between the control circuit terminal 36 and ground.
5. Vehicle in Service Mode, command the child security lockout by pressing the window lockout switch on the S79D window switch-driver. The test lamp should turn ON

and OFF when changing between the commanded states.
If the test lamp is always OFF, test the control circuit for a short to ground or an open/high resistance. If the circuit tests normal, replace the K9 BCM.
If the test lamp is always ON, test the control circuit for a short to voltage. If the circuit tests normal, replace the K9 BCM.

6. If all circuits test normal, replace the X50A fuse block-under-bonnet.

Child Security Door Lockout Malfunction

1. Vehicle OFF, disconnect the harness connector at the appropriate A23 door latch assembly-rear.
2. Test for less than 10 Ω between the ground circuit terminal listed below and ground:
   - A23LR door latch assembly-left rear terminal 8
   - A23RR door latch assembly-right rear terminal 3

   If greater than the specified range, test the ground circuit for an open/high resistance.
3. Vehicle in Service Mode, test for greater than 10V between the signal circuit terminal listed below and ground:
   - A23LR door latch assembly-left rear terminal 9
   - A23RR door latch assembly-right rear terminal 4

   If less than the specified range, test the signal circuit for a short to ground or an open/high resistance. If the circuit tests normal, replace the K9 BCM.
4. Connect a test lamp between the control circuit terminals listed below:
   - A23LR door latch assembly-left rear terminal 7 and terminal 4
   - A23RR door latch assembly-right rear terminal 2 and terminal 9
5. Command the child security lockout by pressing the window lockout switch on the S79D window switch-driver, the test lamp should briefly illuminate while changing between the commanded states.
   If the test lamp is always OFF, test either control circuit for an open/high resistance between the connector and the circuit splice.
6. If all circuits test normal, test or replace the A23 door latch assembly-rear.

Component Testing

1. Vehicle OFF, disconnect the harness connector at the appropriate A23 door latch assembly-rear.
2. Install a 25 A fused jumper wire between one of the control terminals and 12 V. Momentarily install a jumper wire between the other control terminal and ground. Reverse the jumper wires at least two times, the A23 door latch assembly-rear should perform the LOCK and UNLOCK functions.
   If it does not perform as specified, replace the A23 door latch assembly-rear.

Repair Instructions

Perform the Diagnostic Repair Verification after completing the diagnostic procedure.

- Rear Side Door Lock Replacement
- Fuse Block Replacement
- Front Side Door Window and Multifunction Switch Replacement

- Control Module References for BCM replacement, programming and setup

&#169© Copyright Chevrolet. All rights reserved

Power Door Lock Key Cylinder Switches Malfunction

Diagnostic Instructions

- Perform the Diagnostic System Check - Vehicle prior to using this diagnostic procedure.
- Review Strategy Based Diagnosis for an overview of the diagnostic approach.
- Diagnostic Procedure Instructions provides an overview of each diagnostic category.

Diagnostic Fault Information

Circuit	Short to Ground	Open/High Resistance	Short to Voltage	Signal Performance
Driver Door Key Switch Signal	B2500 00	1	1	--
Driver Door Latch Ground	--	1	--	--
1. Key Cylinder Switch Inoperative				

Circuit/System Description

The driver window switch monitors the voltage level of the key switch unlock signal circuit. When the key is inserted into the driver door key cylinder and turned to the Unlock position, a switch within the driver door latch closes causing the voltage to drop within the key switch unlock signal circuit. The driver window switch will detect the drop in voltage and will send a serial data message to the BCM commanding all the doors to unlock.

Reference Information

Schematic Reference

Door Lock/Indicator Schematics

Connector End View Reference

Component Connector End Views

Description and Operation

Power Door Locks Description and Operation

Electrical Information Reference

- Testing for Intermittent Conditions and Poor Connections
- Circuit Testing
- Wiring Repairs
- Connector Repairs

Scan Tool Reference

Control Module References for scan tool information

Circuit/System Verification

Vehicle OFF, insert the key into the drivers door lock cylinder, turn the key Unlock position while observing the scan tool BCM Driver Door Key Unlock Switch parameter, the parameter should change between Inactive and Active.

Circuit/System Testing

1. Vehicle OFF, disconnect the harness connector at the A23D door latch assembly-driver.
2. Test for less than 1 Ω between the ground circuit terminal 8 and ground.
   If greater than the specified range, test the ground circuit for an open/high resistance.
3. Vehicle in Service Mode, verify the scan tool Driver Door Key Unlock Switch parameter is Inactive.
   If not the specified value, test the signal circuit terminal 9 for a short to ground. If the circuit tests normal, replace the S79D window switch-driver.
4. Install a 3 A fused jumper wire between the signal circuit terminal 9 and ground, verify the scan tool Driver Door Key Unlock Switch parameter is Active.
   If not the specified value, test the signal circuit for a short to voltage or an open/high resistance. If the circuit tests normal, replace the S79D window switch-driver.
5. If all circuits tests normal, test or replace the A23D door latch assembly-driver.

Component Testing

1. Vehicle OFF, disconnect the harness connector at the A23D door latch assembly-driver.
2. Test for infinite resistance between terminal 8 and terminal 9 with the switch in the open position.
   If not the specified value, replace the A23D door latch assembly-driver.
3. Test for less than 2 Ω between terminal 8 and terminal 9 with the switch in the Unlock position.
   If greater than the specified range, replace the A23D door latch assembly-driver.

Repair Instructions

Perform the Diagnostic Repair Verification after completing the repair.

- Front Side Door Lock Replacement
- Front Side Door Window and Multifunction Switch Replacement

&#169© Copyright Chevrolet. All rights reserved

Power Door Locks Malfunction

Diagnostic Instructions

- Perform the Diagnostic System Check - Vehicle prior to using this diagnostic procedure.
- Review Strategy Based Diagnosis for an overview of the diagnostic approach.
- Diagnostic Procedure Instructions provides an overview of each diagnostic category.

Diagnostic Fault Information

Circuit	Short to Ground	Open/High Resistance	Short to Voltage	Signal Performance
BCM B+	B3125 02, B3130 02, B3135 02	B3125 02, B3130 02, B3135 02	--	--
Door Lock Switch Signal	B3150 00	1	1	--
Door Unlock Switch Signal	B3140 00	1	1	--
Driver Door Unlock Control	B3125 02, B3130 02, B3135 02	2	2	--
Doors Lock Control	B3125 02, B3130 02, B3135 02	2, 3, 4	2, 3, 4	--
Passenger Doors Unlock Control	B3125 02, B3130 02, B3135 02	3, 4	3, 4	-
Central Door Lock Switch Ground	--	1	--	--
1. Central Door Lock Switch Malfunction 2. Driver Door Unlock Malfunction 3. Door Unlock Malfunction 4. Door Lock Malfunction				

Circuit/System Description

The body control module (BCM) powers the reversible door latch assemblies by providing battery positive voltage and ground to the appropriate lock and unlock control circuits of the door latch assemblies. The lock and unlock control circuits of the rear doors and passenger door latch assemblies are all connected together. When the door latch assemblies are not active, all actuator lock and unlock control circuits are at ground potential within the BCM. Transitioning of the lock actuators to the lock or unlocked position depends upon which control circuits receive voltage and which control circuits receive ground.

Reference Information

Schematic Reference

Door Lock/Indicator Schematics

Connector End View Reference

Component Connector End Views

Description and Operation

Power Door Locks Description and Operation

Electrical Information Reference

- Circuit Testing
- Connector Repairs
- Testing for Intermittent Conditions and Poor Connections
- Wiring Repairs

Scan Tool Reference

Control Module References for scan tool information

Circuit/System Verification

1. Vehicle in Service Mode, observe the scan tool BCM Central Door Lock Switch on Console parameter. The reading should be Inactive and change to Lock and Unlock when pushing the appropriate switch on the A20 radio/HVAC controls.
   If the value does not change between commanded states, refer to Central Door Lock Switch Malfunction.
2. Command the doors to LOCK and UNLOCK with a scan tool, all doors should LOCK and UNLOCK while changing between the commanded states.
   If a door does not LOCK or UNLOCK, refer to Door Lock Malfunction.
   If all doors do not LOCK or UNLOCK, refer to All Door Locks inoperative.

Circuit/System Testing

Central Door Lock Switch Malfunction

1. Vehicle OFF, disconnect the harness connector at the A20 radio/HVAC controls.
2. Test for less than 10 Ω between the ground circuit terminal 17 and ground.
   If greater than the specified range, test the ground circuit for an open/high resistance.
3. Vehicle in Service Mode, verify the scan tool Central Door Lock Switch on Centre Console parameter is Inactive.
   If the value is Lock , test the signal circuit terminal 12 for a short to ground. If the circuit tests normal, replace the K9 BCM.
   If the value is Unlock , test the signal circuit terminal 13 for a short to ground. If the circuit tests normal, replace the K9 BCM.
4. Install a 3 A fused jumper wire between the signal circuit terminal 12 and ground. Verify the scan tool Central Door Lock Switch on Centre Console parameter is Lock.
   If not the specified value, test the signal circuit for a short to voltage or an open/high resistance. If the circuit tests normal, replace the K9 BCM.
5. Install a 3 A fused jumper wire between the signal circuit terminal 13 and ground. Verify the scan tool Central Door Lock Switch on Centre Console parameter is Unlock.
   If not the specified value, test the signal circuit for a short to voltage or an open/high resistance. If the circuit tests normal, replace the K9 BCM.
6. If all circuits test normal, replace the A20 radio/HVAC controls.

Door Lock Malfunction

1. Vehicle OFF, disconnect the harness connector at the appropriate A23 door latch assembly.
2. Connect a test lamp between the control circuit terminals listed below:
   - A23D door latch assembly-driver terminal 2 and terminal 3
   - A23P door latch assembly-passenger terminal 7 and terminal 8
   - A23LR door latch assembly-left rear terminal 2 and terminal 3
   - A23RR door latch assembly-right rear terminal 7 and terminal 8
3. Vehicle in Service Mode, command the door to LOCK and UNLOCK by using the central door lock switch. The test lamp should briefly illuminate when commanding the LOCK and UNLOCK states.
   If the test lamp is always OFF for either the LOCK or UNLOCK command, test the control circuit for an open/high resistance between the connector and the circuit splice.
4. If all circuits test normal, test or replace the A23 door latch assembly.

All Door Locks inoperative

1. Vehicle OFF, disconnect the X2 harness connector at the K9 BCM.
2. Vehicle in Service Mode, verify that a test lamp illuminates between the B+ circuit terminal 4 and ground.
   If the test lamp does not illuminate, test the B+ circuit for a short to ground or an open/high resistance
3. Vehicle OFF, disconnect the X6 harness connector at the K9 BCM.
4. Disconnect the X1 harness connector at the X50A fuse block-under-bonnet.
5. Test for infinite resistance between the control circuit listed below and ground:
   - Connector X1, terminal 11 at the X50A fuse block-under-bonnet
   - Connector X1, terminal 12 at the X50A fuse block-under-bonnet
   - Connector X6 terminal 1 at the K9 BCM

- Connector X6 terminal 4 at the K9 BCM

  If not the specified value, test the appropriate control circuit for a short to ground. If the circuit tests normal, test or replace the appropriate A23 door latch assembly.

6. Connect the X1 harness connector at the X50A fuse block-under-bonnet.
7. Test for infinite resistance between the control circuit terminal 2 X6 at the K9 BCM and ground.
   If not the specified value, test the control circuit for a short to ground. If the circuit tests normal, replace the X50A fuse block-under-bonnet.
8. If all circuits test normal, replace the K9 BCM.

Component Testing

Door Catch

1. Vehicle OFF, disconnect the harness connector at the appropriate A23 door latch assembly.
2. Install a 25 A fused jumper wire between one of the control terminals and 12 V. Momentarily install a jumper wire between the other control terminal and ground. Reverse the jumper wires at least two times, the door latch should perform the LOCK and UNLOCK functions.
   If it does not perform as specified, replace the A23 door latch assembly.

Central Door Lock Switch

1. Vehicle OFF, disconnect the harness connector at the A20 radio/HVAC controls.
2. Test for infinite resistance between the signal terminal 12 and the ground terminal 17 with the switch in the open position.
   If not the specified value, replace the A20 radio/HVAC controls.
3. Test for infinite resistance between the signal terminal 13 and the ground terminal 17 with the switch in the open position.
   If not the specified value, replace the S48C multifunction switch 1-instrument panel.
4. Test for less than 2 Ω between the signal terminal 12 and the ground terminal 17 with the switch in the lock position.
   If greater than the specified range, replace the A20 radio/HVAC controls.
5. Test for less than 2 Ω between the signal terminal 13 and the ground terminal 17 with the switch in the unlock position.
   If greater than the specified range, replace the A20 radio/HVAC controls.

Repair Instructions

Perform the Diagnostic Repair Verification after completing the diagnostic procedure.

- Radio Control Assembly Replacement
- Front Side Door Lock Replacement
- Rear Side Door Lock Replacement
- Fuse Block Replacement
- Control Module References for BCM replacement, programming and setup

&#169© Copyright Chevrolet. All rights reserved

Rear Hatch/Gate Ajar Indicator Malfunction

Diagnostic Instructions

- Perform the Diagnostic System Check - Vehicle prior to using this diagnostic procedure.
- Review Strategy Based Diagnosis for an overview of the diagnostic approach.
- Diagnostic Procedure Instructions provides an overview of each diagnostic category.

Diagnostic Fault Information

Circuit	Short to Ground	Open/High Resistance	Short to Voltage	Signal Performance
Rear Compartment Lid Ajar Switch Signal	1	2	2	--
Tailgate Latch Ground	--	3	--	--
1. Hatch Ajar Message Always Illuminated 2. Hatch Ajar Message Inoperative 3. Hatch Release Inoperative				

Circuit/System Description

The body control module (BCM) supplies a 12V signal to the rear compartment lid ajar switch signal circuit. When the tailgate latch releases the rear hatch, the rear compartment lid ajar switch, which is internal to the tailgate latch, is supplied with ground which causes the rear hatch/gate ajar switch signal circuit to be pulled low. The BCM interprets this and communicates via serial data to the driver information center which will display the Hatch Open message.

Reference Information

Schematic Reference

Release Systems Schematics : Tailgate Schematics → Release System Schematics

Connector End View Reference

Component Connector End Views

Description and Operation

Tailgate Ajar Indicator Description and Operation

Electrical Information Reference

- Circuit Testing
- Connector Repairs
- Testing for Intermittent Conditions and Poor Connections
- Wiring Repairs

Scan Tool Reference

Control Module References for scan tool information

Circuit/System Verification

Vehicle in Service Mode, observe the scan tool Rear Closure Ajar Switch parameter while opening and closing the rear hatch. The parameter should change between Inactive and Active.

Circuit/System Testing

1. Vehicle OFF, disconnect the harness connector at the A23C tailgate latch assembly.
2. Vehicle in Service Mode, verify the scan tool Rear Closure Ajar Switch parameter is Inactive.
   If not the specified value, test the signal circuit terminal 2 for a short to ground. If the circuit tests normal, replace the K9 BCM.
3. Install a 3 A fused jumper wire between the signal circuit terminal 2 and ground. Verify the scan tool Rear Closure Ajar Switch parameter is Active.
   If not the specified value, test the signal circuit for a short to voltage or and open/high resistance. If the circuit tests normal, replace the K9 BCM.
4. If all circuits test normal, test or replace the A23C tailgate latch assembly.

Component Testing

Static Test

1. Vehicle OFF, disconnect the harness connector at the A23C tailgate latch assembly.
2. Test for infinite resistance between the signal terminal 2 and the ground terminal 1 with the switch in the open position.
   If not the specified value, replace the A23C tailgate latch assembly.
3. Test for less than 2 Ω between the signal terminal 2 and the ground terminal 1 with the switch in the closed position.

If greater than the specified range, replace the A23C tailgate latch assembly.

Repair Instructions

Perform the Diagnostic Repair Verification after completing the diagnostic procedure.

- Tailgate Latch Replacement
- Control Module References for BCM replacement, programming and setup

&#169© Copyright Chevrolet. All rights reserved

Fuel Tank Filler Door Lock Actuator Replacement

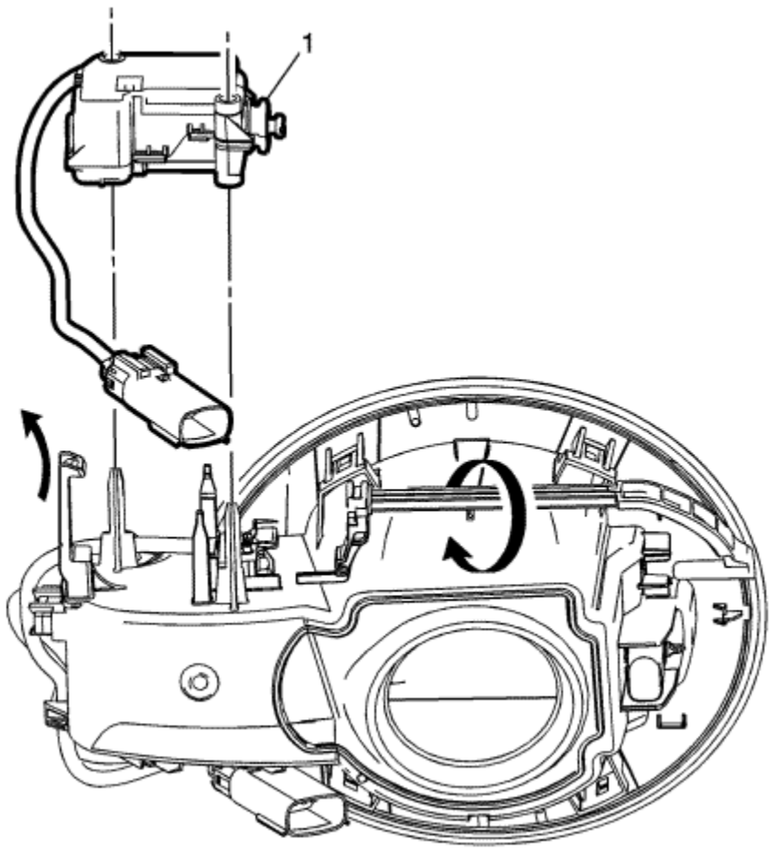

Callout	Component Name
Preliminary Procedure 1. Disconnect the battery negative cable. Refer to Battery Negative Cable Disconnection and Connection . 2. Remove the fuel tank filler pipe housing. Refer to Fuel Tank Filler Pipe Housing Replacement .	

1	Fuel Tank Filler Door Lock Actuator **Procedure** 1. Disconnect the actuator electrical harness from the fuel tank filler pipe housing. 2. Remove the actuator rod from the actuator shaft, with light pressure, pressing sideways on the rod at the shafts end, and rotating the rod outward from the housing. 3. Release the 3 retainers while using light upward pressure on the actuator.

© Copyright Chevrolet. All rights reserved

Front Side Door Inside Handle Cable Replacement

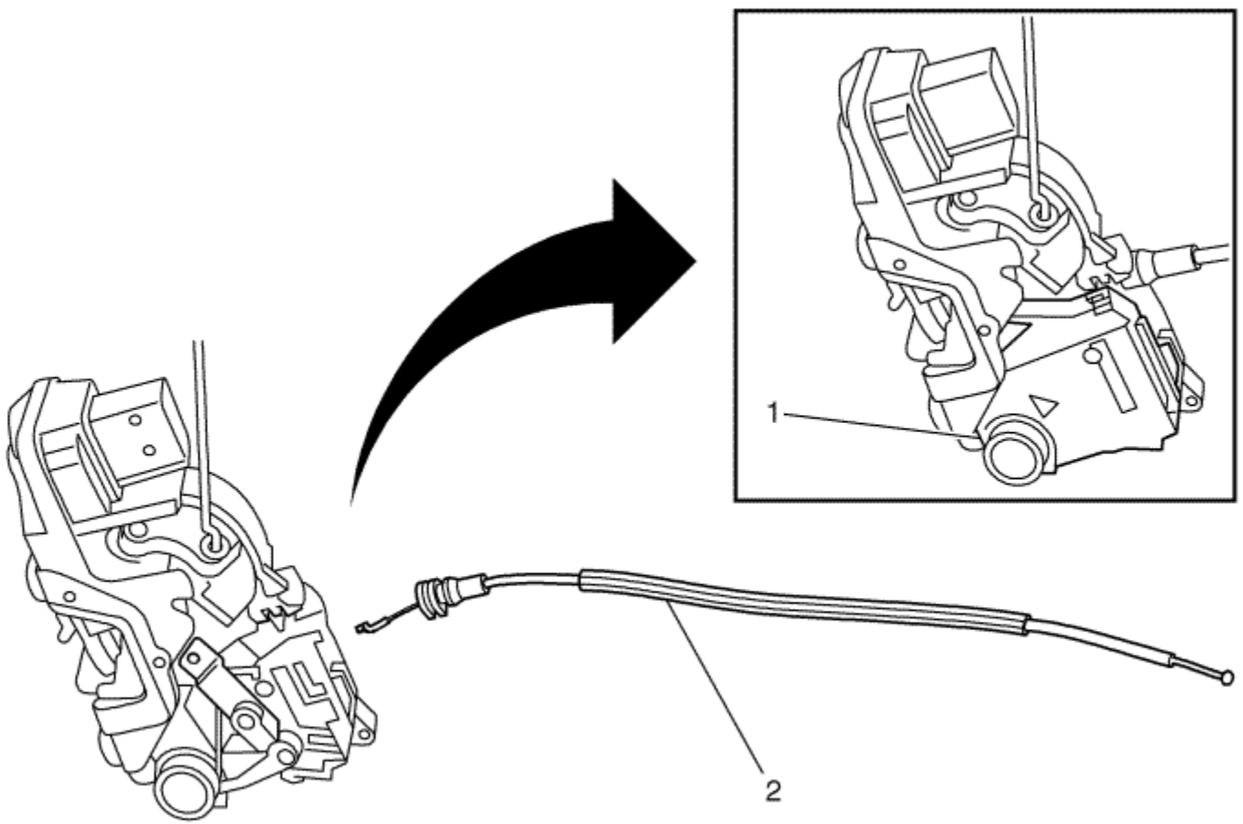

Callout	Component Name
Preliminary Procedure Remove the front side door lock. Refer to Front Side Door Lock Replacement .	
	Front Side Door Inside Handle Lock Cable Cover

1	**Procedure** 1. Release the cable retainer from the inner door panel. 2. Open the front side door inside handle cable cover to access and release cable end.
2	Front Side Door Inside Handle Cable **Procedure** Ensure that the lock cable cover is closed before installing the lock. **Tip** Inspect the door lock system for proper operation before installing the door trim panel.

© Copyright Chevrolet. All rights reserved

Rear Side Door Inside Handle Cable Replacement

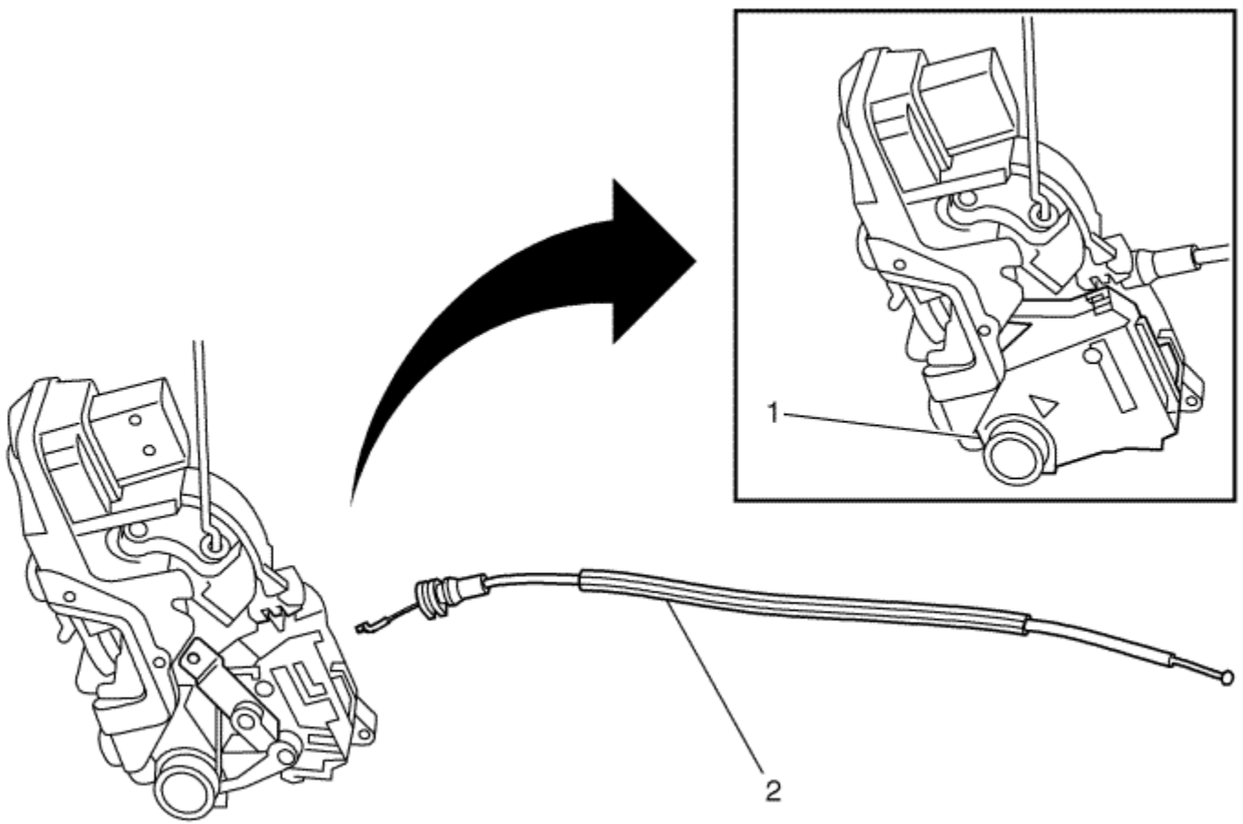

Callout	Component Name
Preliminary Procedure Remove the rear side door lock. Refer to Rear Side Door Lock Replacement .	
	Rear Side Door Inside Handle Lock Cable Cover

1	**Procedure** 1. Release the cable retainer from the inner door panel. 2. Open the rear side door inside handle cable cover to access and release the cable end
2	Rear Side Door Inside Handle Cable **Procedure** Ensure that the lock cable cover is closed before installing the lock. **Tip** Inspect the door lock system for proper operation before installing the door trim panel.

© Copyright Chevrolet. All rights reserved

Front Side Door Lock Cylinder Replacement

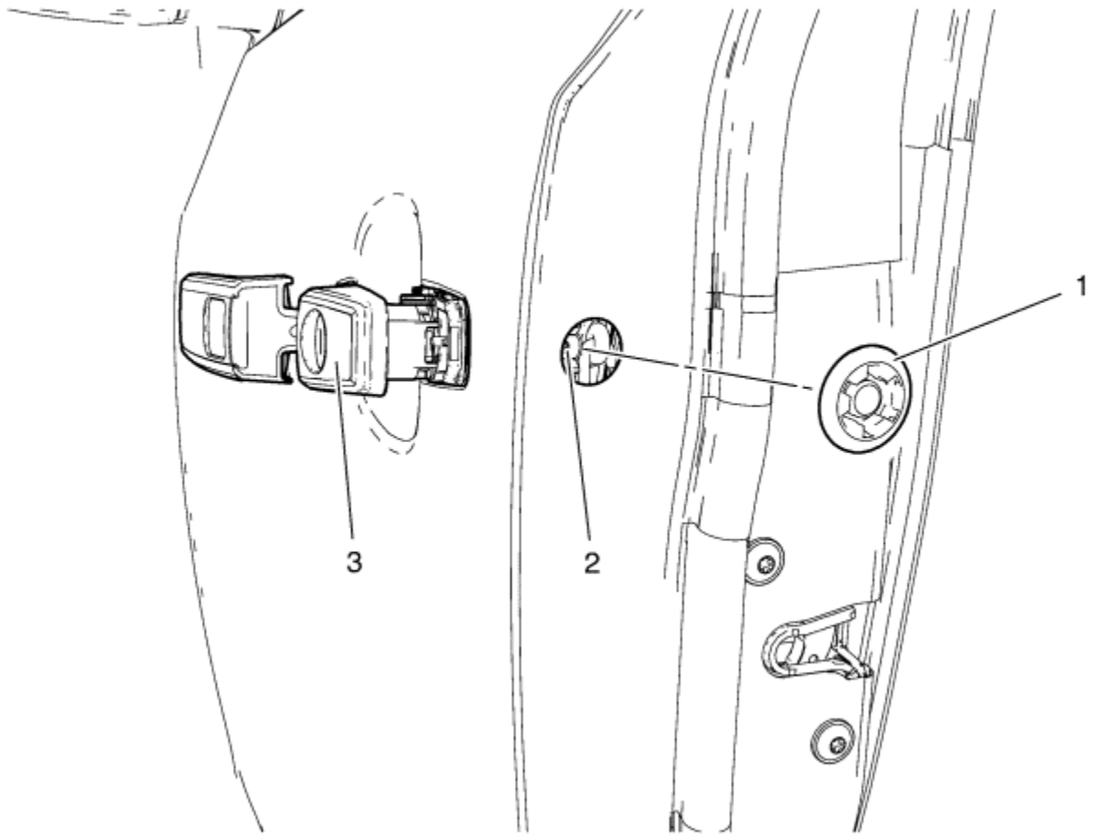

Callout	Component Name
1	Front Side Door Lock Cylinder Screw Cover **Procedure** 1. Do Not remove the inside door trim.

	2. Use a flat-bladed tool to remove the cylinder opening access cover.
2	Front Side Door Lock Cylinder Screw **Caution:** Refer to Fastener Caution in the Preface section. **Procedure** 1. Do Not remove the lock cylinder screw completely from the housing. Unscrew the screw to a hard stop, remove the lock cylinder. 2. It is not necessary to remove the outside door handle or housing to replace the lock cylinder. **Tighten** 5 N·m (44 lb in)
3	Front Side Door Lock Cylinder **Procedure** 1. Pull the lock cylinder from the housing. 2. Remove the lock cylinder bezel from the cylinder. 3. Use a suitable tool to release the lock cylinder bezel. **Note:** Pull the outside handle to release the door lock cylinder.

© Copyright Chevrolet. All rights reserved

Opening the Tailgate Without Electrical Power

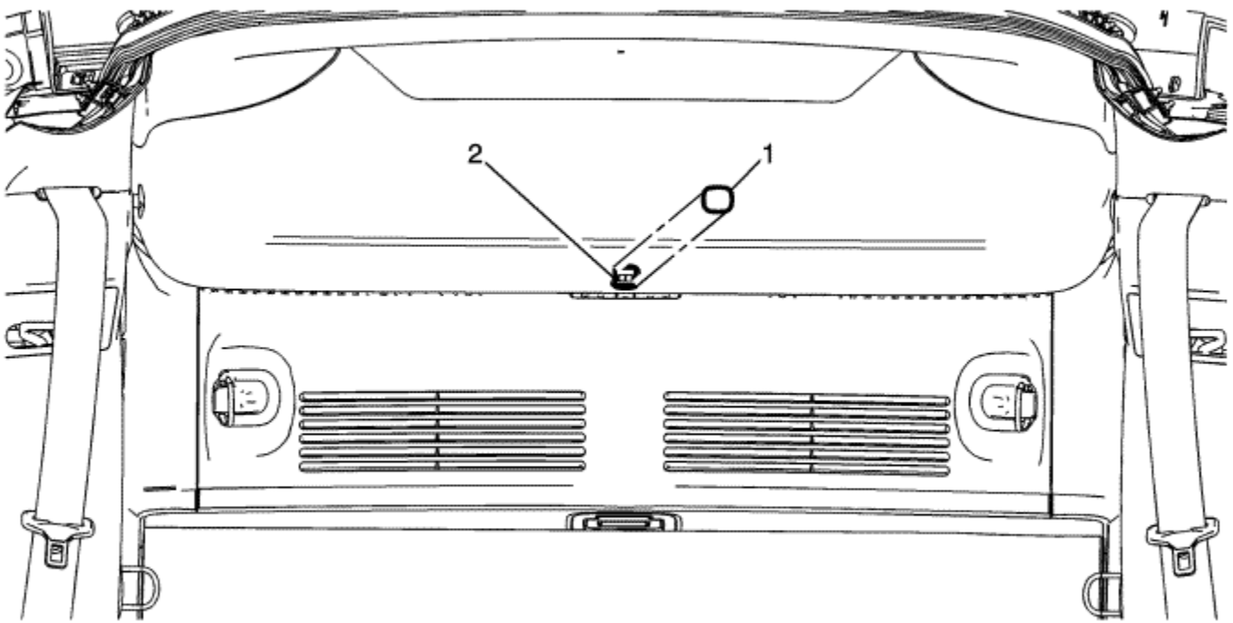

Callout	Component Name
1	Tailgate Access Cover
2	Tailgate Latch **Procedure**

	1. Insert a flat-bladed tool into the hole, rotate slightly counterclockwise. 2. Push open the tailgate from the inside. 3. Install the access cover.

© Copyright Chevrolet. All rights reserved

Front Side Door Outside Handle Replacement - Base

Removal Procedure

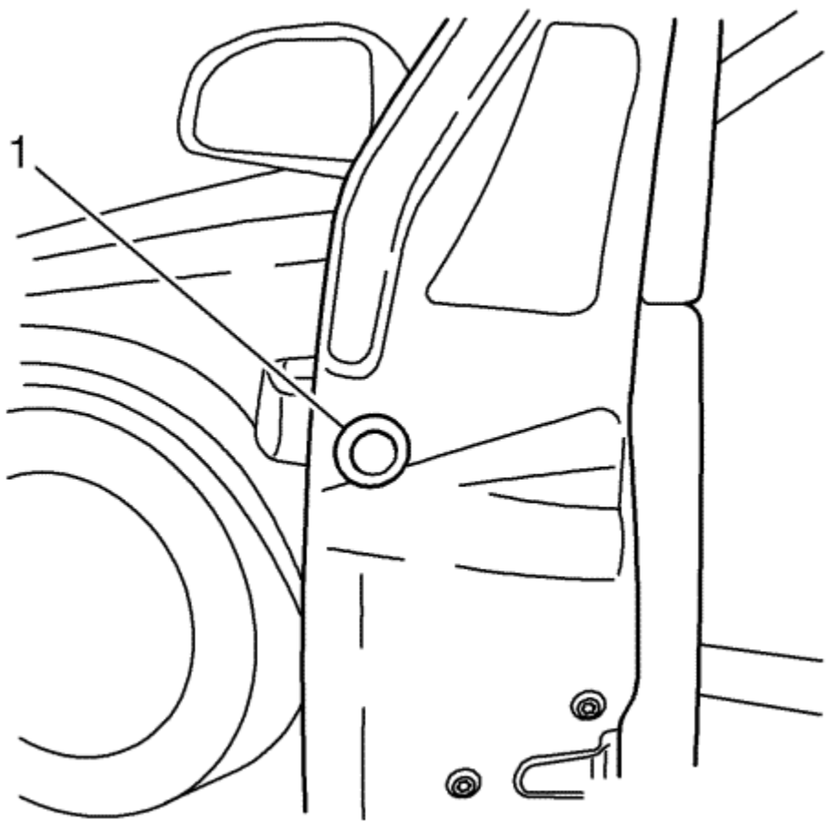

1. Remove the cover cap that conceals the screw (1) from the inside edge of the door.

   Using a small flat-bladed tool, release the cover cap from the door.

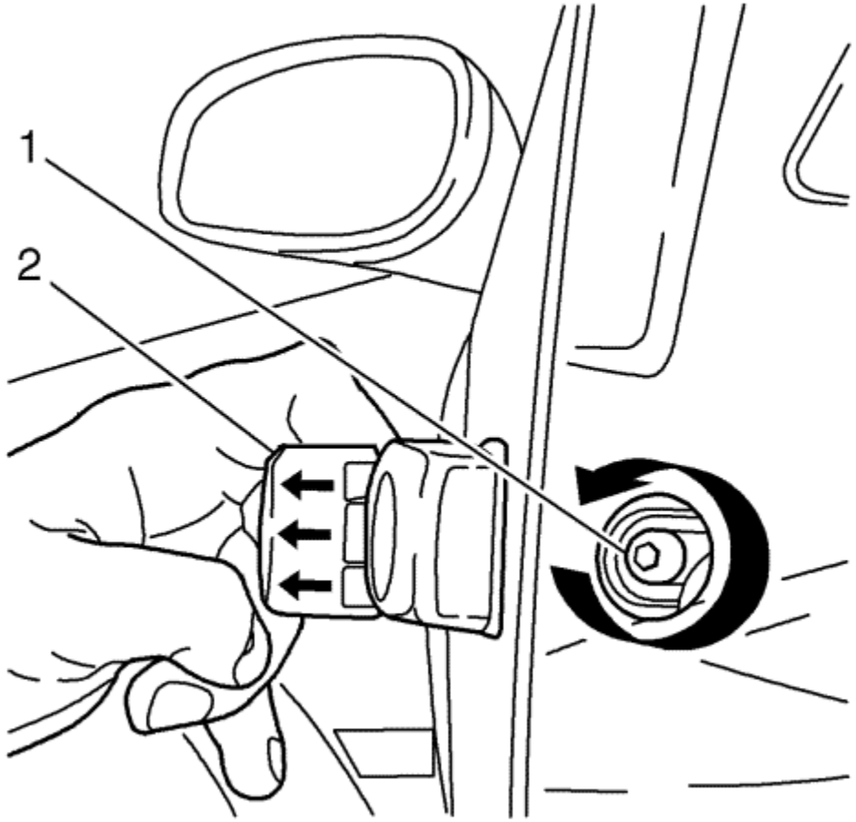

Note: The door outside handle (2) must now be secured in the pulled position.

2. Remove the door handle from the door.
   2.1. Pull the door handle (2) outwards and hold.
   2.2. Turn the fastener (1) counterclockwise (left) to the mechanical hard stop.

2.3. Remove the bezel with cylinder / cover with blank cylinder (1) from the door.

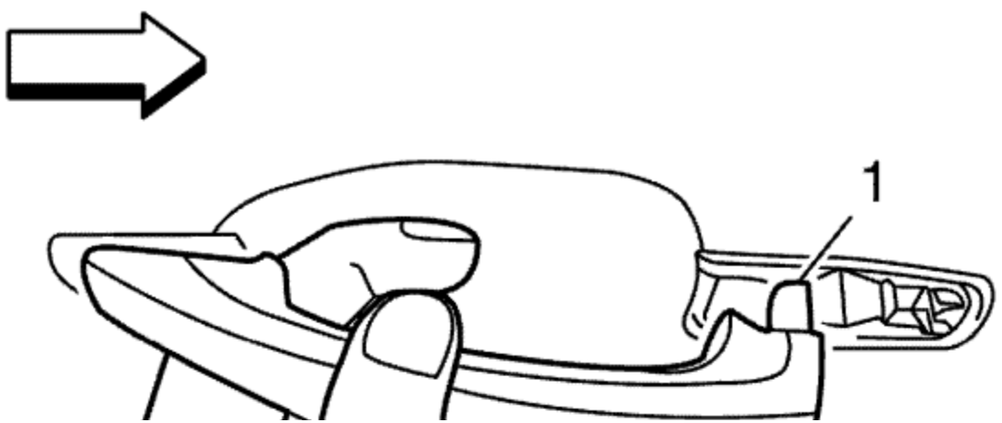

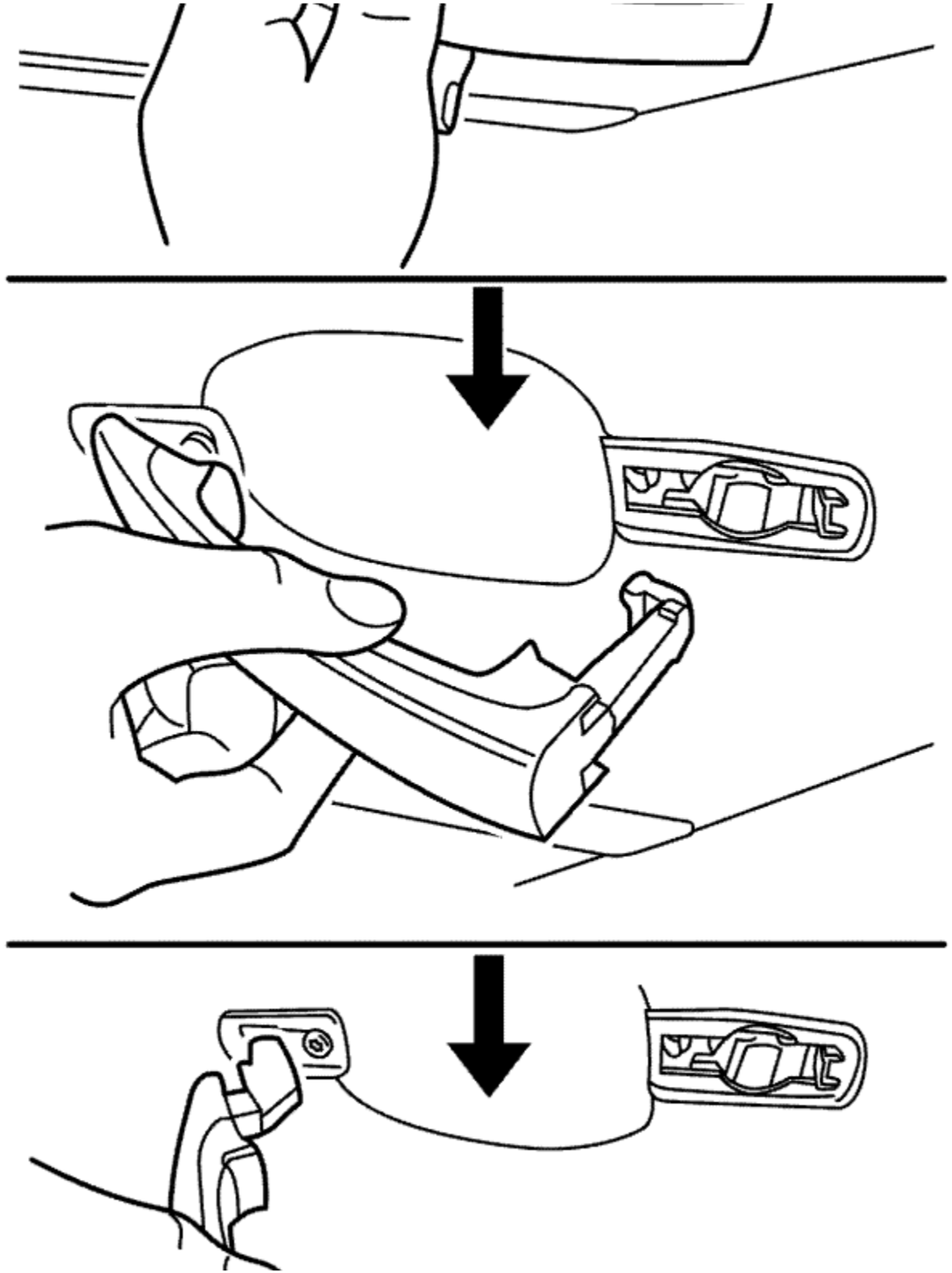

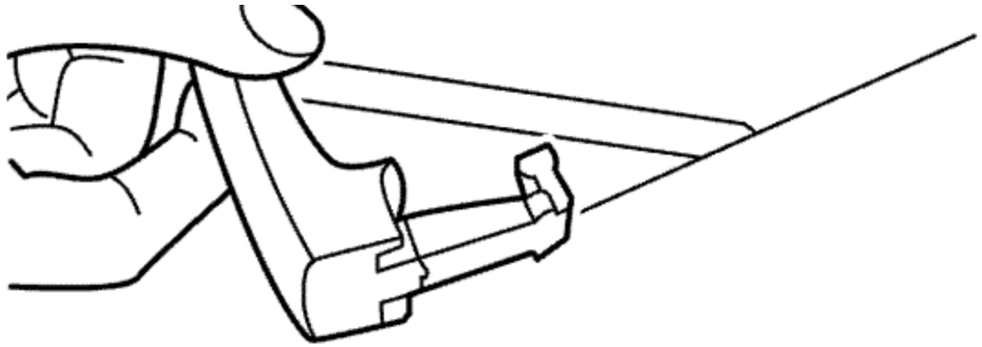

3. Remove the door handle (1) from the door as follows:
   3.1. Slide the door handle rearward releasing it from the door handle bracket.
   3.2. Open the door handle fully.
   3.3. Remove the door handle from the door.

Installation Procedure

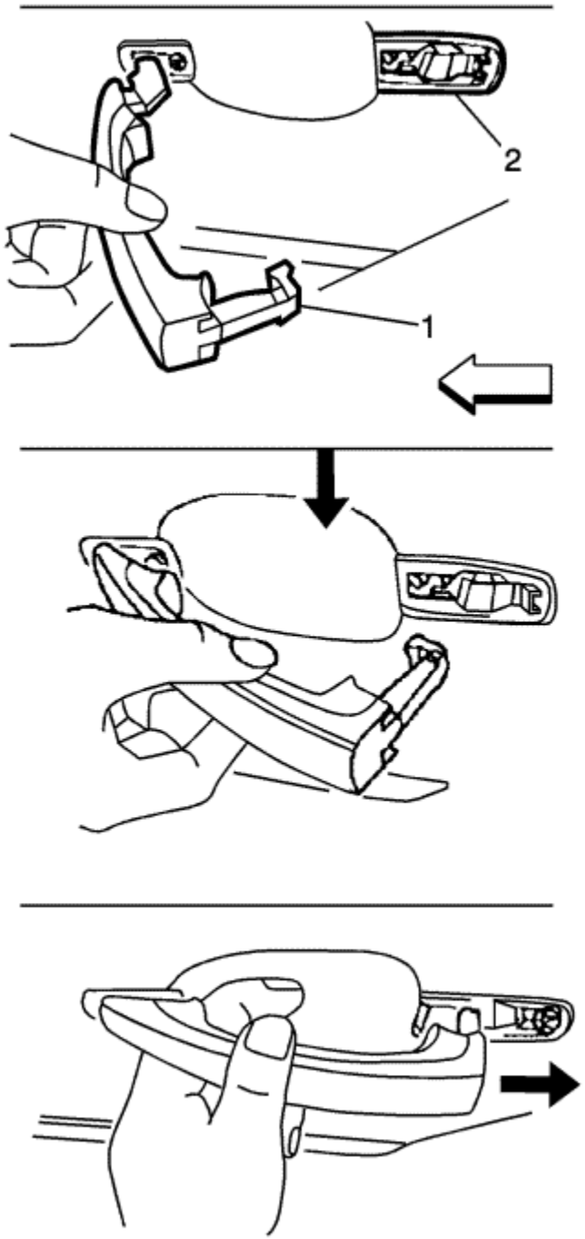

1. Install the door handle (1) to the door (2) as follows:
   1.1. Insert the door handle into the door handle pocket.

1.2. Slide the door handle forward securing it into the door handle bracket.

Note: The door handle will snap back to a flush condition, continue to turn the fastener in a clockwise (right) direction to the mechanical hard stop.

2. Install the bezel with cylinder / cover with blank cylinder (1) in the door.

   Hold the bezel or cover flush to the door sheet and turn the cylinder clamp screw (2) to a mechanical hard stop.

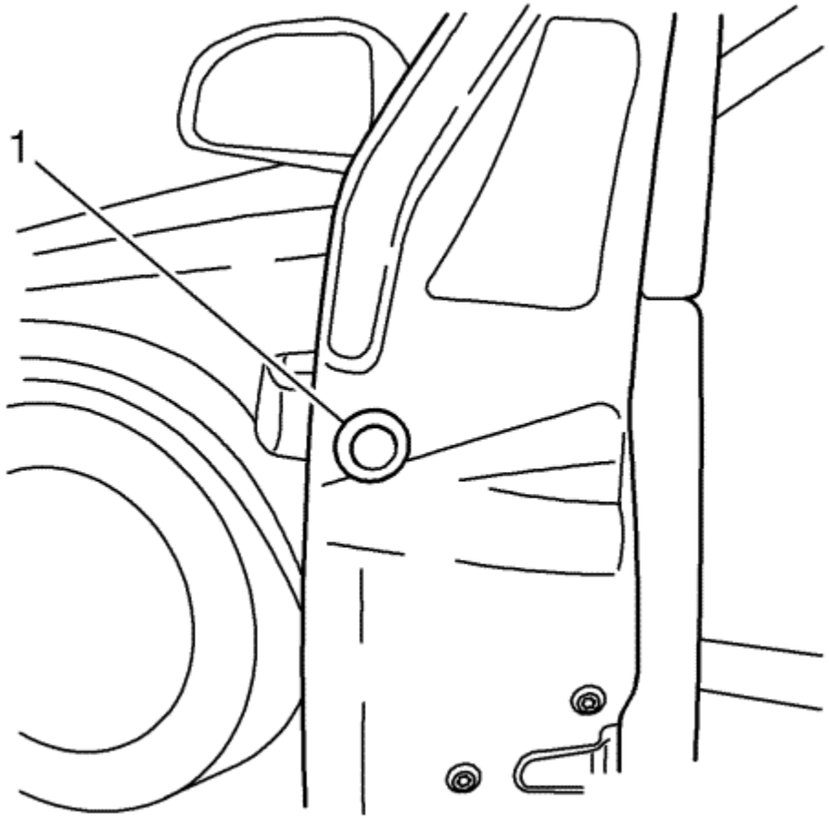

3. Install the cover cap that conceals the screw (1) to the inside edge of the door.
4. Ensure that the door lock system operates properly.

© Copyright Chevrolet. All rights reserved

Front Side Door Outside Handle Replacement - Pass Key Entry ATH

Removal Procedure

1. Remove the front side door trim panel. Refer to Front Side Door Trim Replacement .
2. Remove the door water deflector.
3. Move the window to the full up position.
4. Disconnect the electrical connector from the door handle for the pass key entry (ATH).

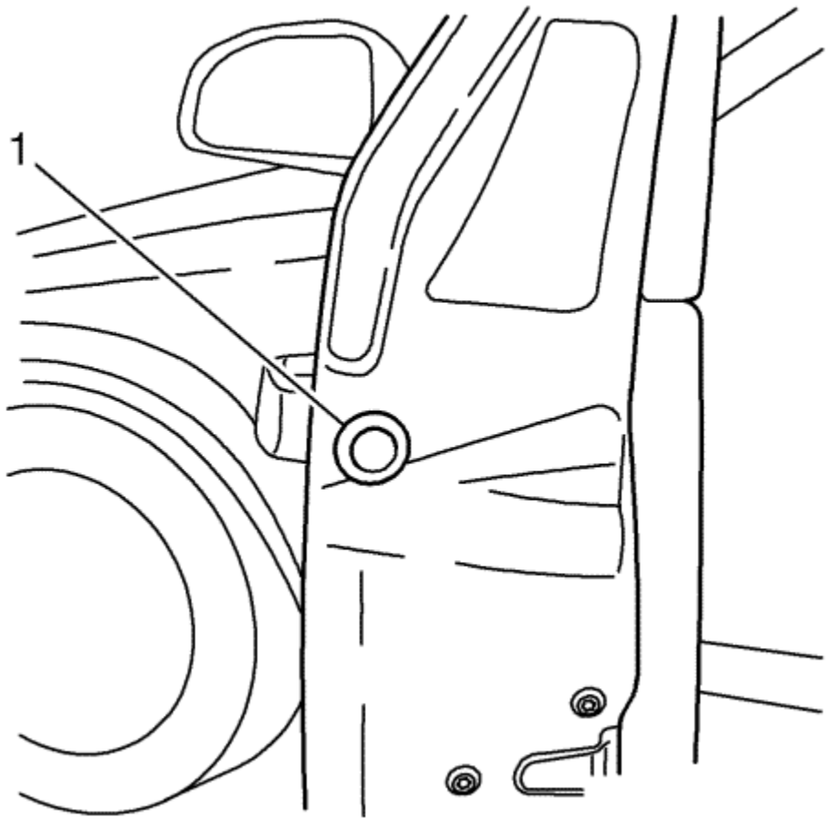

5. Remove the cover cap that conceals the screw (1) from the inside edge of the door.

   Using a small flat-bladed tool, release the cover cap from the door.

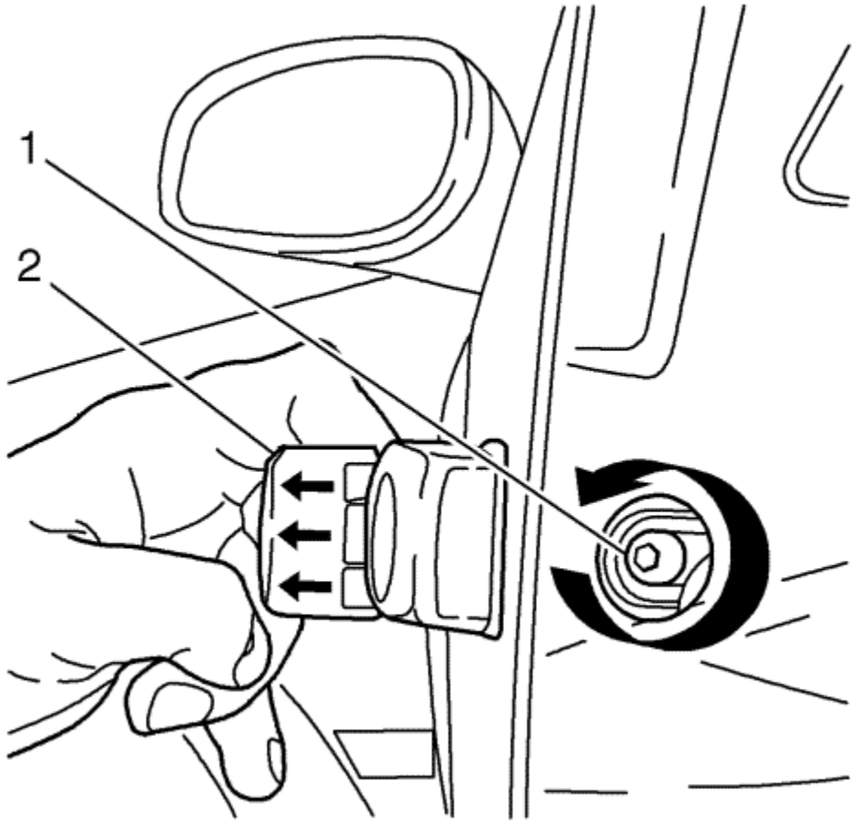

Note: The door outside handle (2) must now be secured in the pulled position.

6. Remove the outside door handle from the door.
   6.1. Pull the outside door handle (2) outwards and hold.
   6.2. Turn the fastener (1) counterclockwise (left) to the mechanical hard stop.

7. Remove the bezel with cylinder / cover with blank cylinder (1) from the door.

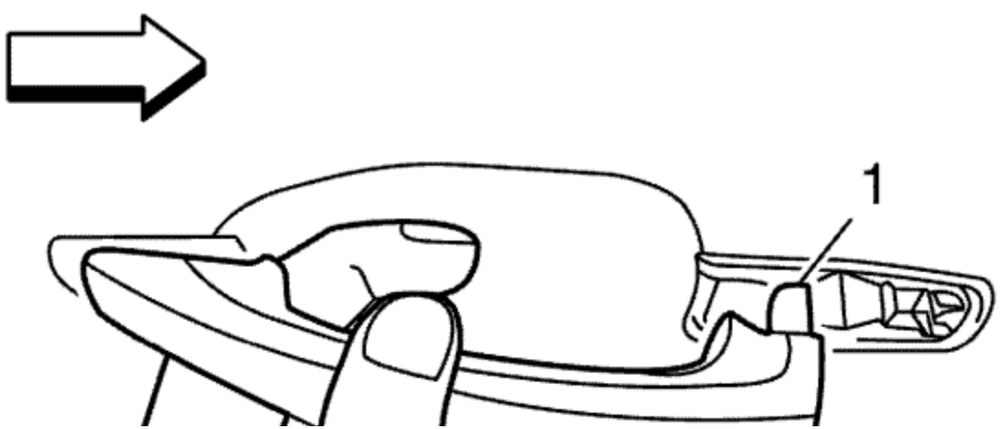

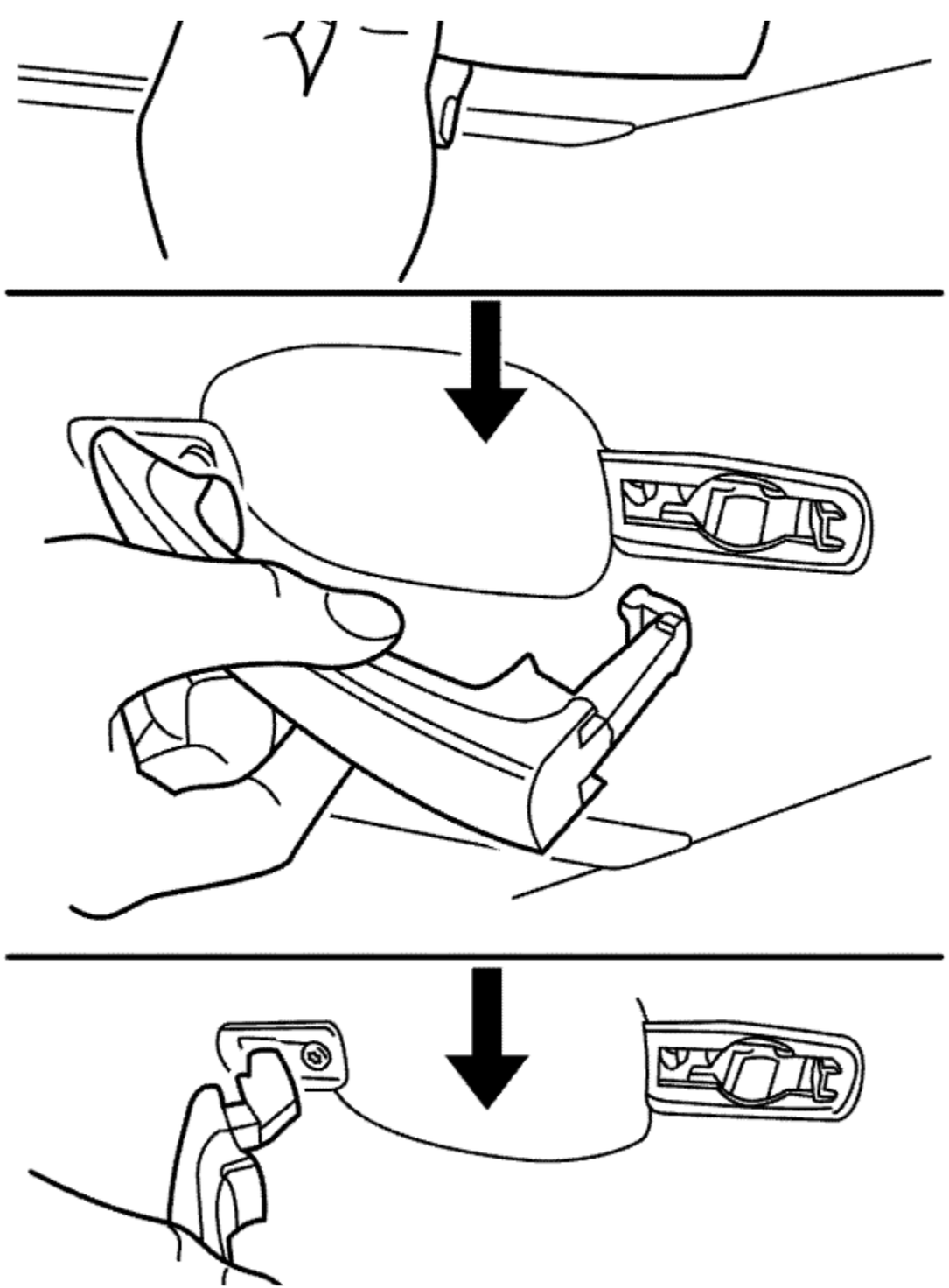

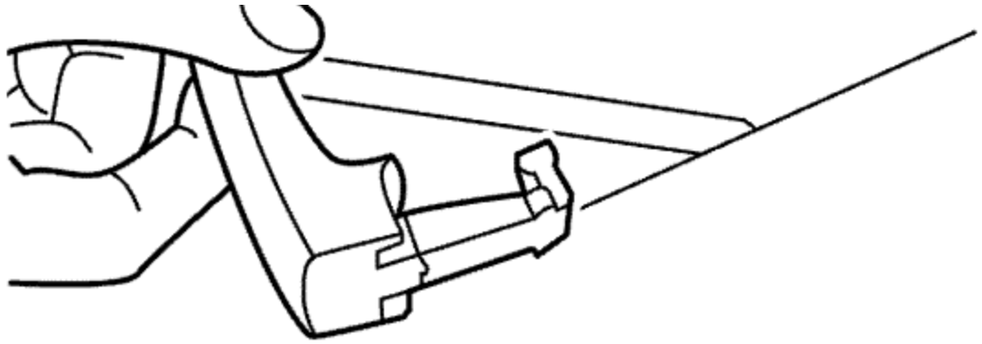

8. Remove the door handle (1) from the door as follows:
   8.1. Slide the door handle rearward releasing it from the door handle bracket.
   8.2. Open the door handle fully.
   8.3. Remove the door handle from the door.

Installation Procedure

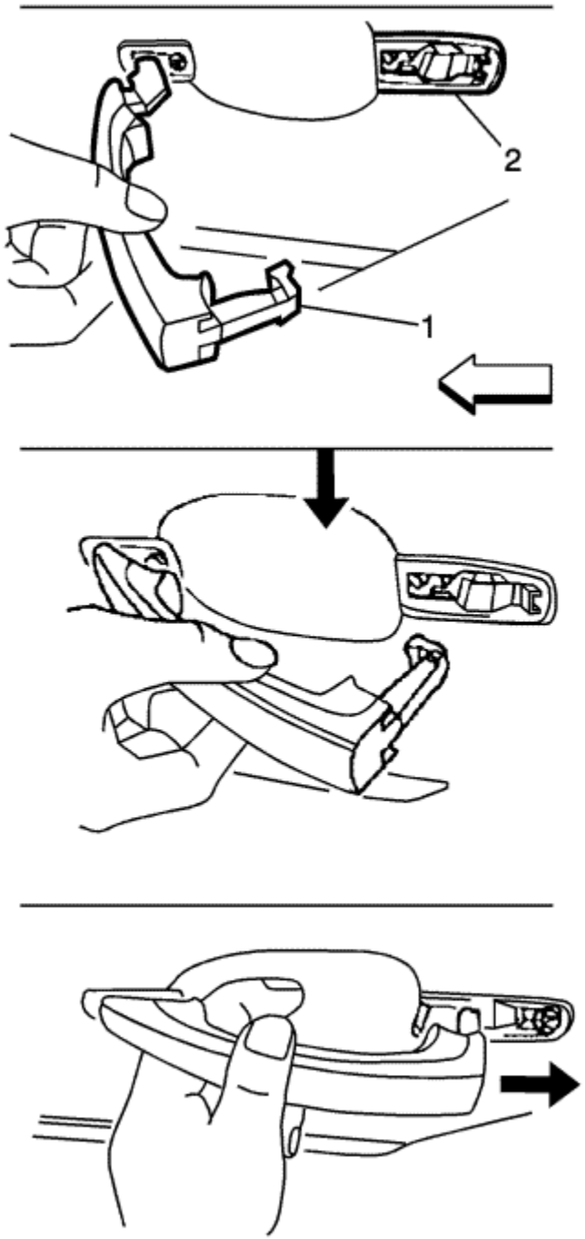

1. Install the door handle (1) to the door (2) as follows:
   1.1. Insert the door handle into the door handle pocket.

1.2. Slide the door handle forward securing it into the door handle bracket.

Note: The door handle will snap back to a flush condition, continue to turn the fastener in a clockwise (right) direction to the mechanical stop.

2. Install the bezel with cylinder / cover with blank cylinder (1) in the door.

   Hold the bezel or cover flush to the door sheet and turn the cylinder clamp screw (2) to a mechanical hard stop.

3. Connect the electrical connector to the door handle for the pass key entry (ATH).

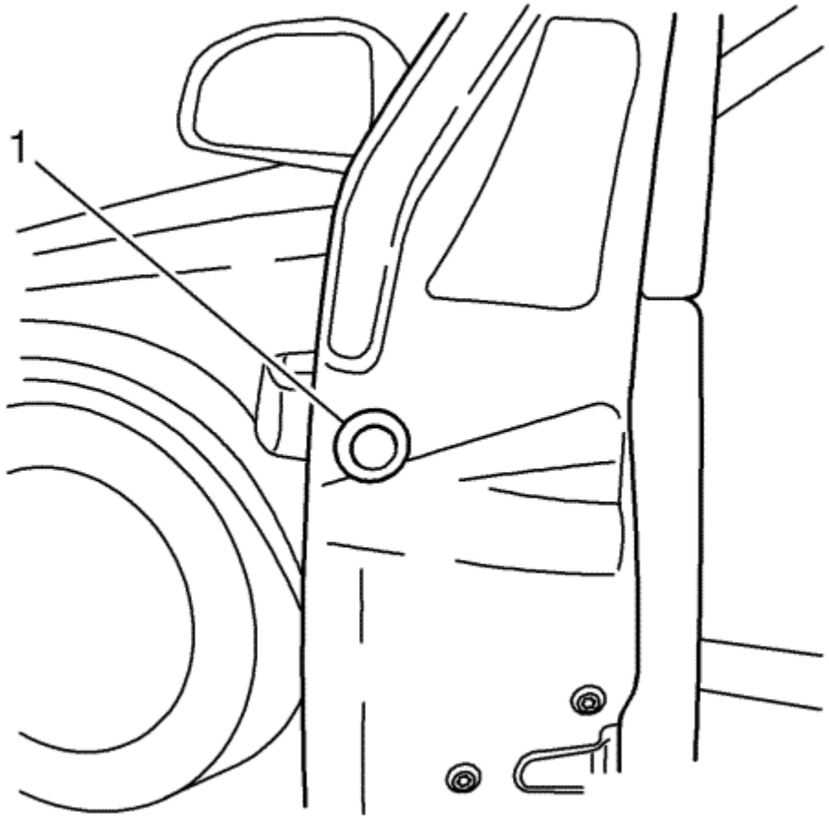

4. Install the cover cap that conceals the screw (1) to the inside edge of the door.
5. Vehicle with passive entry / passive start do the following:
   5.1. Close all doors on the vehicle.
   5.2. With the key fob, lock all the doors.
   5.3. Put key fob in pocket.
   5.4. Walk up to every door and open (Note: Each door should open, if door does not open then further diagnostic needs to be completed.
6. Install the door water deflector.
7. Install the front side door trim panel. Refer to Front Side Door Trim Replacement .

© Copyright Chevrolet. All rights reserved

Front Side Door Outside Handle Bracket Replacement

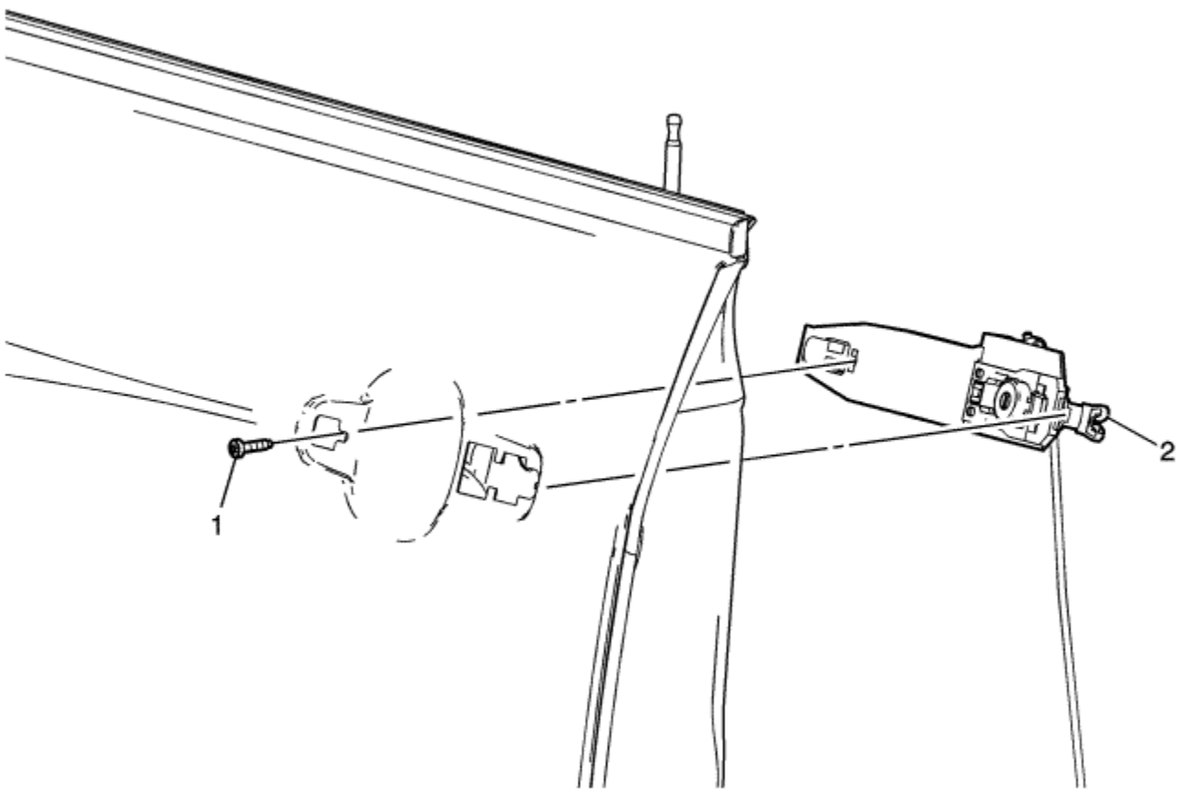

Callout	Component Name
Preliminary Procedures	

1. Place the window in the full up position.
2. Remove the front side door trim panel. Refer to Front Side Door Trim Replacement .
3. Remove the front outside door handle. Refer to Front Side Door Outside Handle Replacement : Pass Key Entry ATH → Base .

1	Front Side Door Outside Handle Bracket Screw **Caution:** Refer to Fastener Caution in the Preface section. **Procedure** 1. Remove arm rest support. 2. Remove the water deflector. 3. Remove the 2 rear front side door window outer weatherstrip bolts and reposition the weatherstrip. Refer to Front Side Door Window Outer Weatherstrip Replacement . 4. Use a suitable to unclip the outside handle rod from the front side door lock. 5. If servicing the driver side, unclip the lock cylinder rod from the handle bracket. **Tighten** 10 N·m (89 lb in)
2	Front Side Door Outside Handle Bracket **Procedure** 1. In order to prevent outside handle lever pre-load, latch, outside handle, handle bracket and cover/cap shall be fully secured to the door prior to securing integral latch clip to outside handle rod. Integral latch clip shall be in the full up position while securing to outside handle rod. Refer to Front Side Door Outside Handle Rod Adjustment . 2. Inspect the door lock system for proper operation before installing the door trim panel.

© Copyright Chevrolet. All rights reserved

Rear Side Door Outside Handle Bracket Replacement

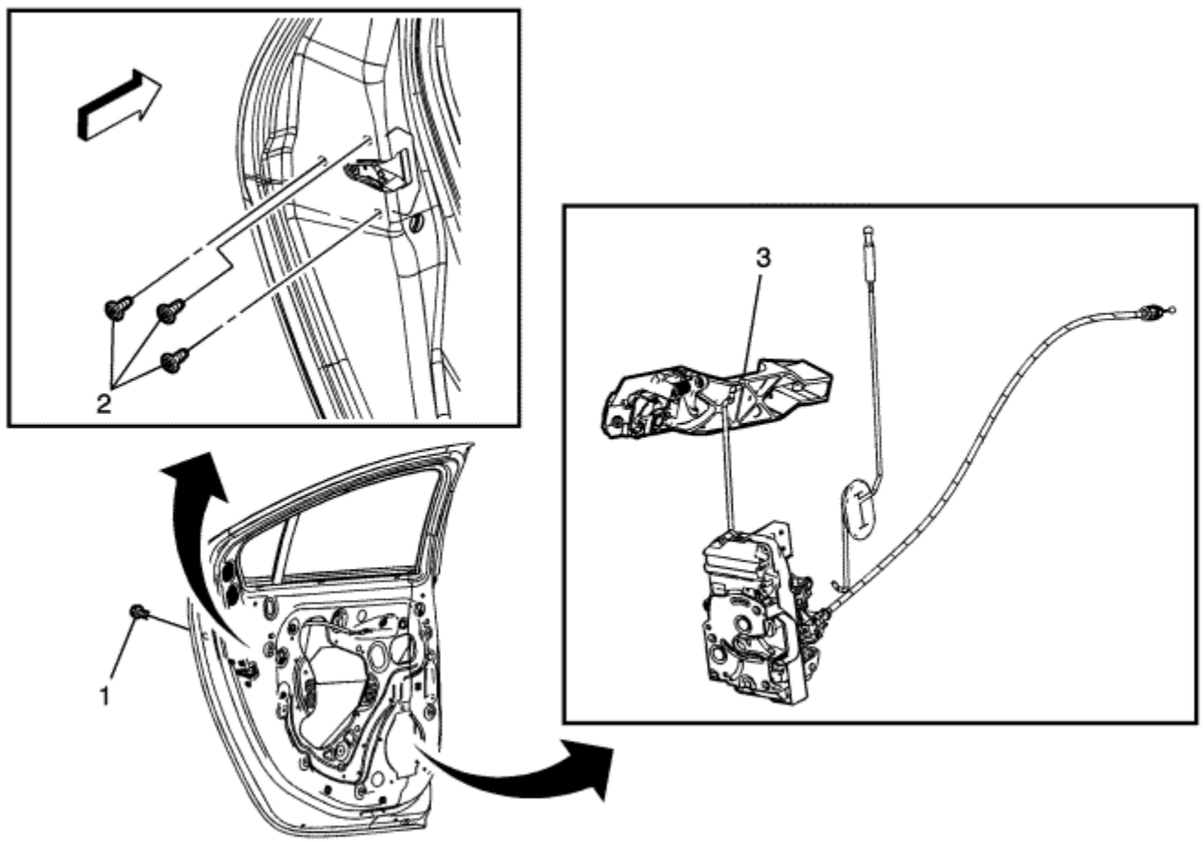

Callout	Component Name
Preliminary Procedures	
	1. Remove the outside door handle. Refer to Rear Side Door Outside Handle Replacement . 2. Remove the rear side door rear channel. Refer to Rear Side Door Window Rear Channel Replacement .

1	Rear Side Door Outside Handle Bracket Screw **Caution:** Refer to Fastener Caution in the Preface section. **Tighten** 10 N·m (89 lb in)
2	Rear Side Door Lock Screws (Qty: 3) **Procedure** Unclip the outside handle rod from the lock. **Tighten** 10 N·m (89 lb in)
3	Rear Side Door Outside Handle Bracket **Procedure** 1. In order to prevent outside handle lever pre-load, latch, outside handle, handle bracket and cover/cap shall be fully secured to the door prior to securing integral latch clip to outside handle rod. Integral latch clip shall be in the full up position while securing to outside handle rod. Refer to Rear Side Door Outside Handle Rod Adjustment . 2. Inspect the door lock system for proper operation before installing the door trim panel.

© Copyright Chevrolet. All rights reserved

Tailgate Latch Replacement

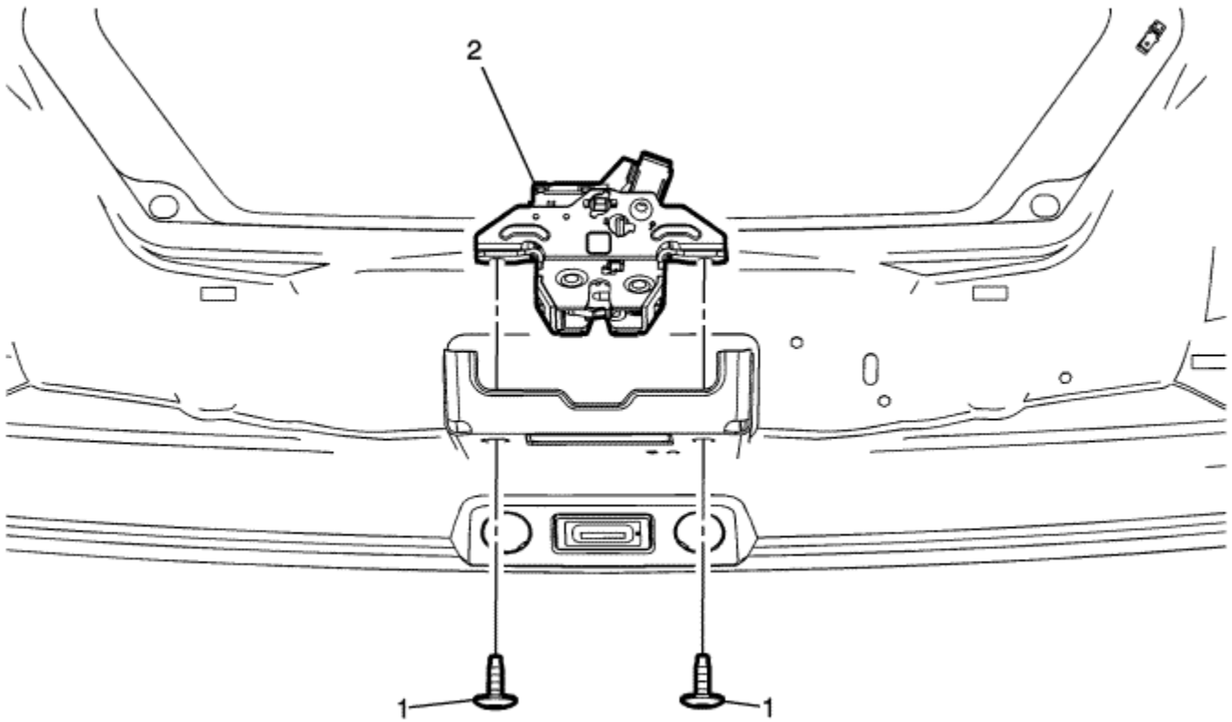

Callout	Component Name
Preliminary Procedure Remove the tailgate lower trim panel. Refer to Tailgate Lower Trim Finish Panel Replacement .	
	Tailgate Latch Screw (Qty: 2)

1	**Caution:** Refer to Fastener Caution in the Preface section. **Tighten** 10 N·m (89 lb in)
2	Tailgate Latch Assembly **Procedure** 1. Disconnect the electrical connector. 2. Adjust the tailgate if needed. Refer to Tailgate Adjustment .

© Copyright Chevrolet. All rights reserved

Rear Side Door Outside Handle Replacement

Removal Procedure

1. Place the window to the full up position.
2. Remove the rear side door trim panel. Refer to Rear Side Door Trim Replacement .
3. Remove the rear side door trim panel bracket.
4. Remove the water deflector.

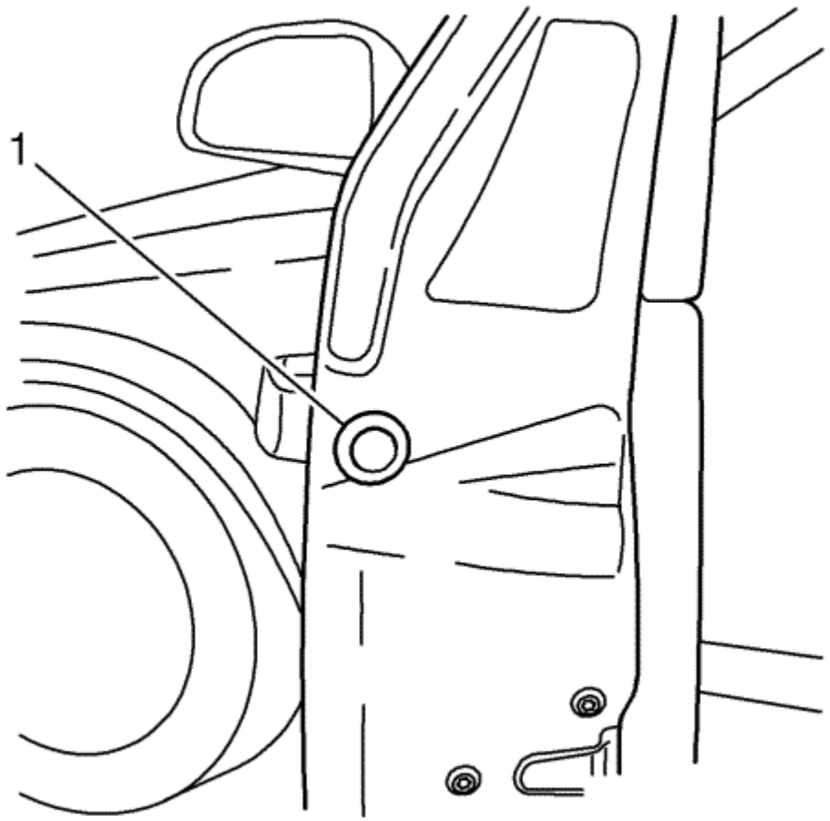

5. Remove screw cover (1) from the inside edge of the side door.

   Using a suitable tool, release the screw plug from the door.

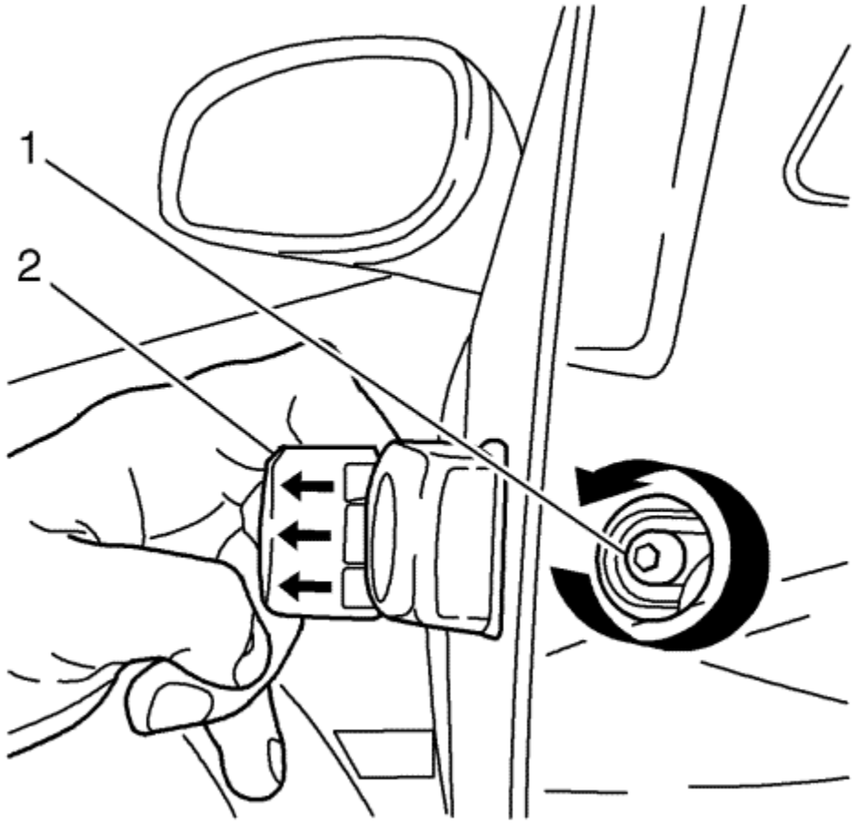

6. Loosen the door blank cylinder clamp screw (1) to the left, Do Not remove the screw completely from blank cylinder clamp, just until the mechanical hard stop is reached.

7. Remove the blank lock cylinder and cover (1).
8. Retighten the blank lock cylinder clamp screw to the right until the mechanical hard stop is reached.

   Note: The follow step doesn't require the door handle rod or lock cylinder rod to be removed from the handle housing.

9. Reach inside the inner door panel, pull downward on the outside handle bracket cam and rod releasing the outside door handle from the handle bracket and cam. Refer to Rear Side Door Outside Handle Rod Replacement for reference only.

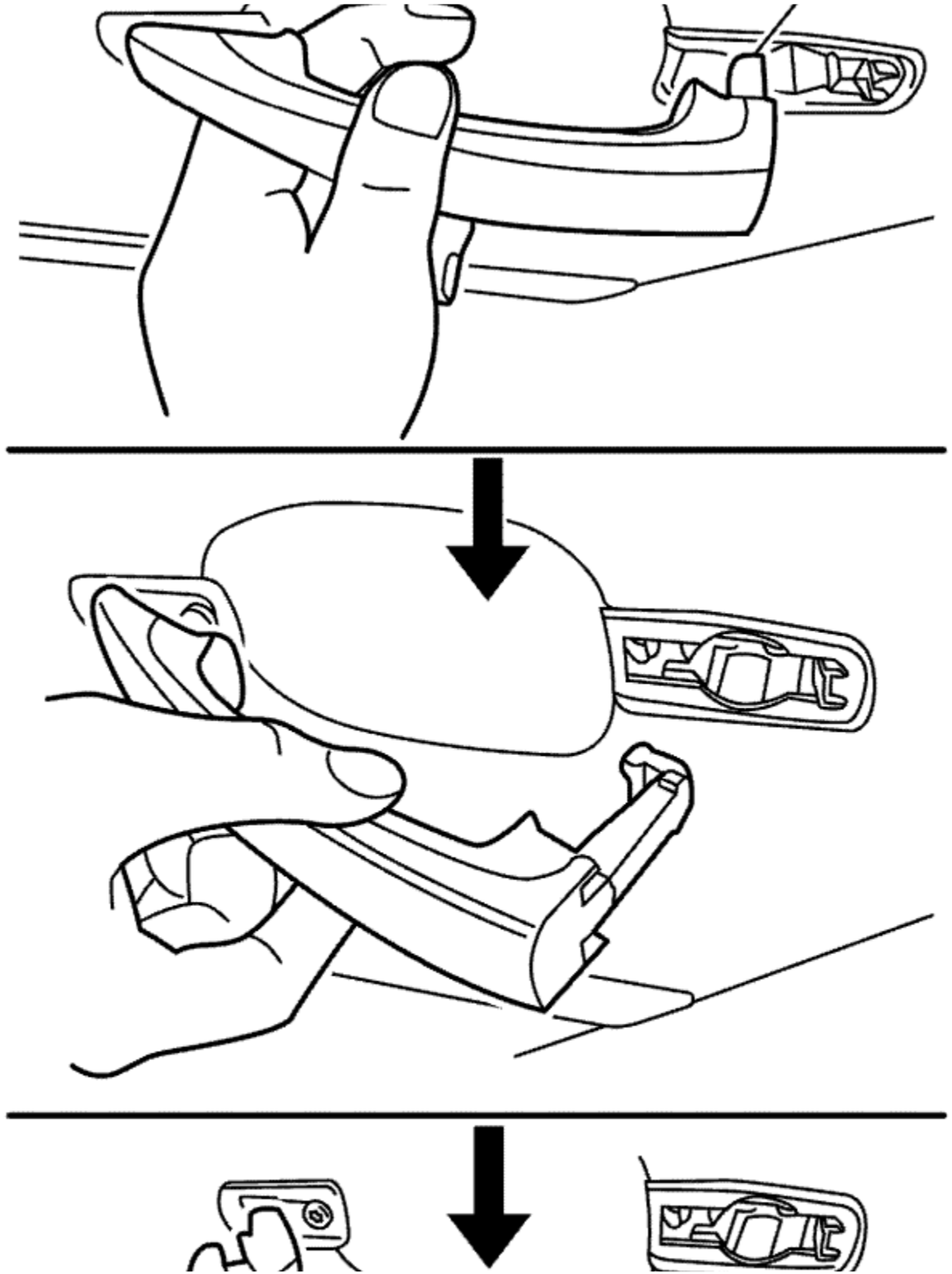

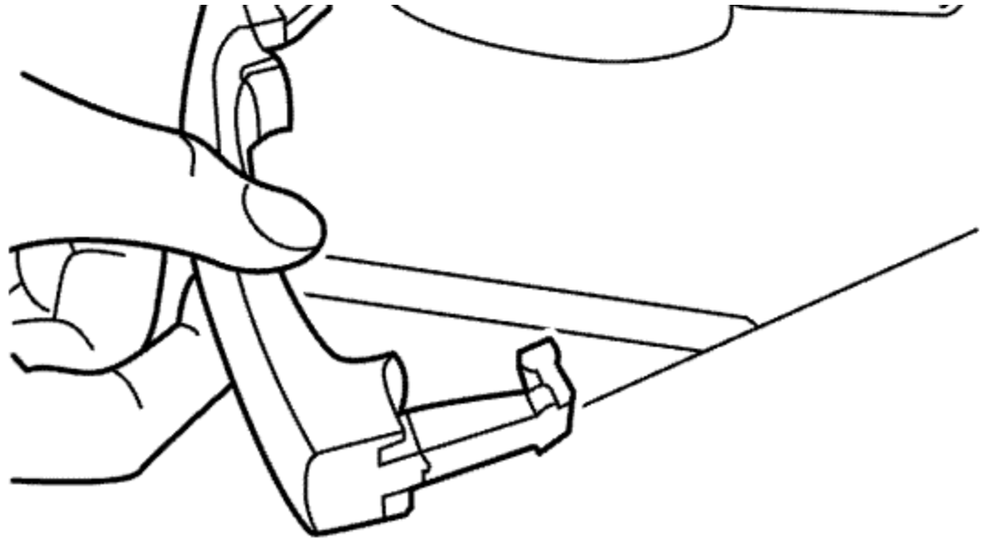

10. Pull the outside door handle (1) to the rear of the door releasing it from the pocket.

Installation Procedure

1. Ensure that the blank cylinder gasket is in place when install the cylinder to the handle.
2. Position the door handle to the door.
3. Guide the outside door handle into the outside door handle pocket open.

   Note: The follow step doesn't require the door handle rod or lock cylinder rod to be removed from the handle housing.

4. Reach inside the inner door panel, pull downward on the outside handle bracket cam allowing the handle to be install to the housing. Refer to Rear Side Door Outside Handle Rod Replacement for reference only.
5. Loosen the door blank cylinder clamp screw to the left until the mechanical hard stop is reached.

6. Install the door blank cylinder and cover (1).

   Caution: Refer to Fastener Caution in the Preface section.

7. Install door blank cylinder clamp screw to the right until the mechanical hard stop is reached. Tighten to **5 N·m (44 lb in)**.

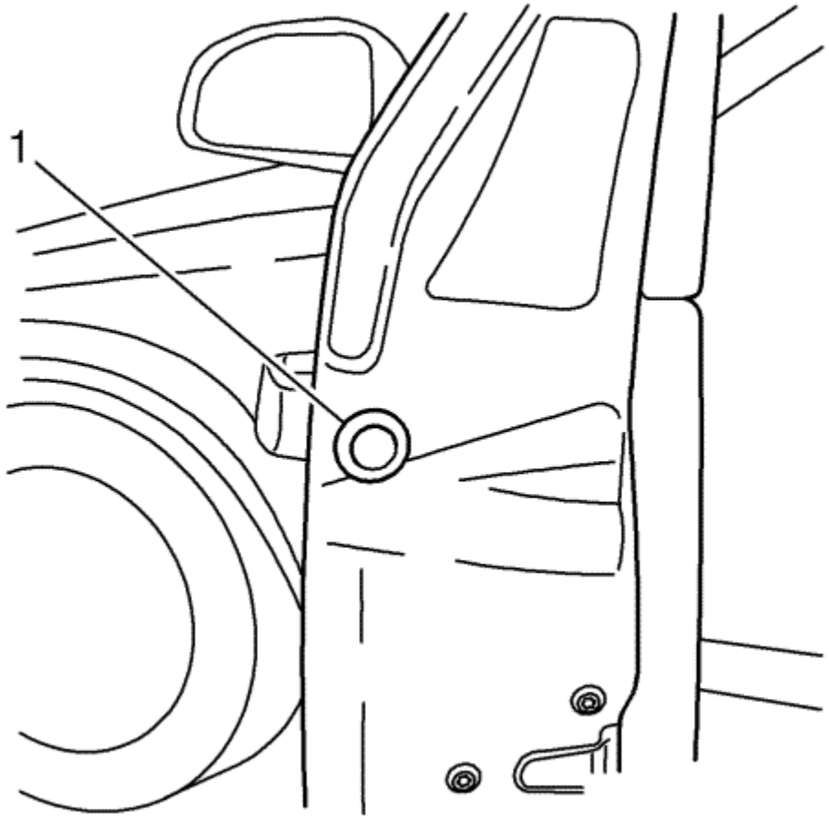

8. Install the screw plug (1) to the side door.
9. Inspect the door lock system for proper operation before installing the door trim panel.
10. Install the water deflector.
11. Install the rear side door trim panel bracket.
12. Install the rear side door trim panel. Refer to Rear Side Door Trim Replacement .

© Copyright Chevrolet. All rights reserved

Front Side Door Lock Cylinder Opening Cover Replacement

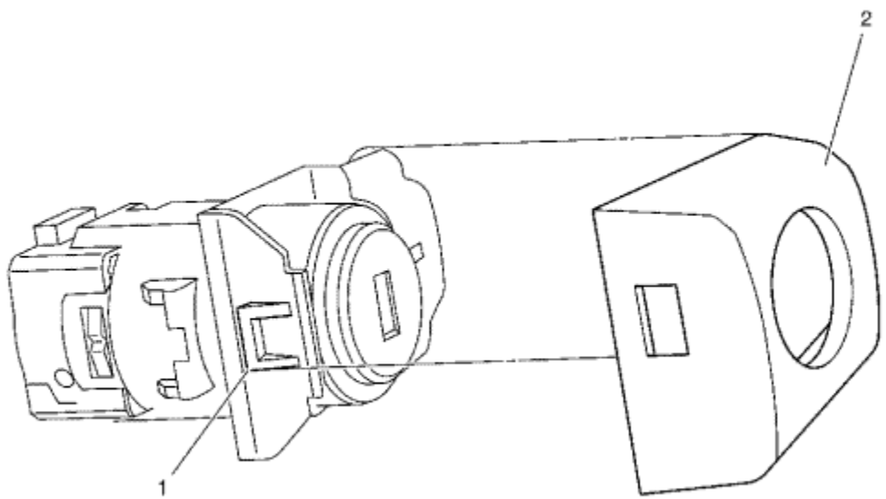

Callout	Component Name
Preliminary Procedure Remove the front side door lock cylinder. Refer to Front Side Door Lock Cylinder Replacement .	
1	Front Side Door Lock Cylinder Opening Cover Retainer **Procedure** Use a suitable tool to release the front side door lock cylinder cover.
2	Front Side Door Lock Cylinder Opening Cover **Tip** Inspect the door lock system for proper operation before installing the door trim panel.

© Copyright Chevrolet. All rights reserved

Rear Side Door Lock Cylinder Opening Cover Replacement

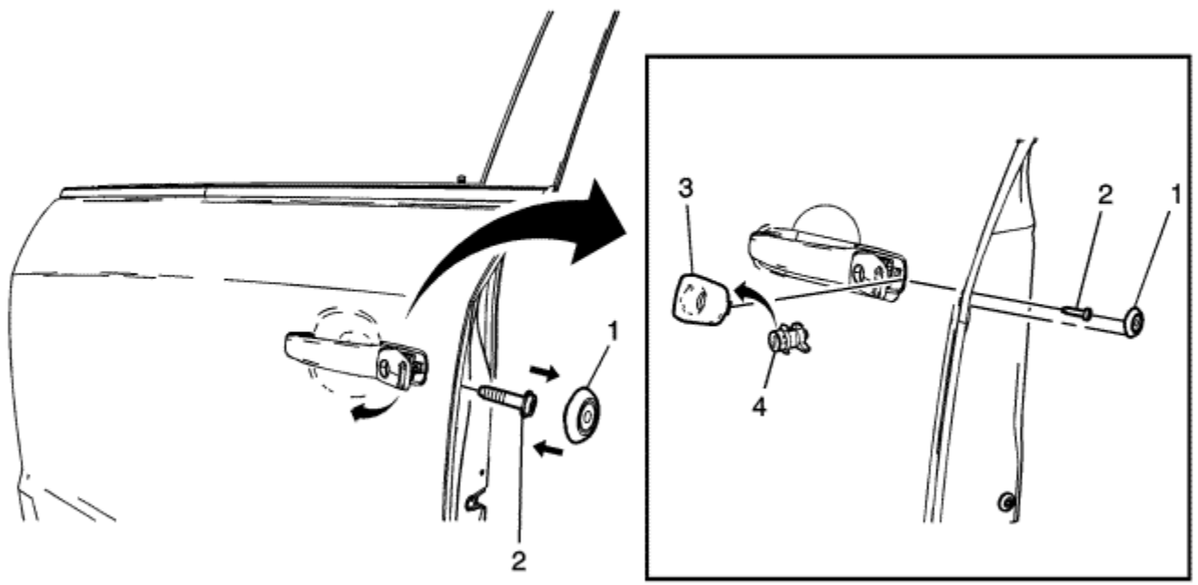

Callout	Component Name
1	Rear Side Door Lock Cylinder Clamp Access Plug **Tip** Use a suitable tool to remove the cover.
	Rear Side Door Lock Cylinder Clamp Screw

2	**Caution:** Refer to Fastener Caution in the Preface section. **Procedure** Do Not remove the cylinder clamp screw completely from the housing, unscrew the screw to a hard stop, releasing the blank cylinder from the housing. **Tip** It is not necessary to remove the outside door handle or housing to replace the cylinder. **Tighten** 5 N·m (44 lb in)
3	Rear Side Door Lock Cylinder Cover
4	Rear Side Door Lock Cylinder **Procedure** 1. Ensure that the lock cylinder gasket is in place when installing the lock cylinder to the handle. 2. Inspect the door lock system for proper operation before installing the door trim panel.

© Copyright Chevrolet. All rights reserved

Front Side Door Lock Replacement

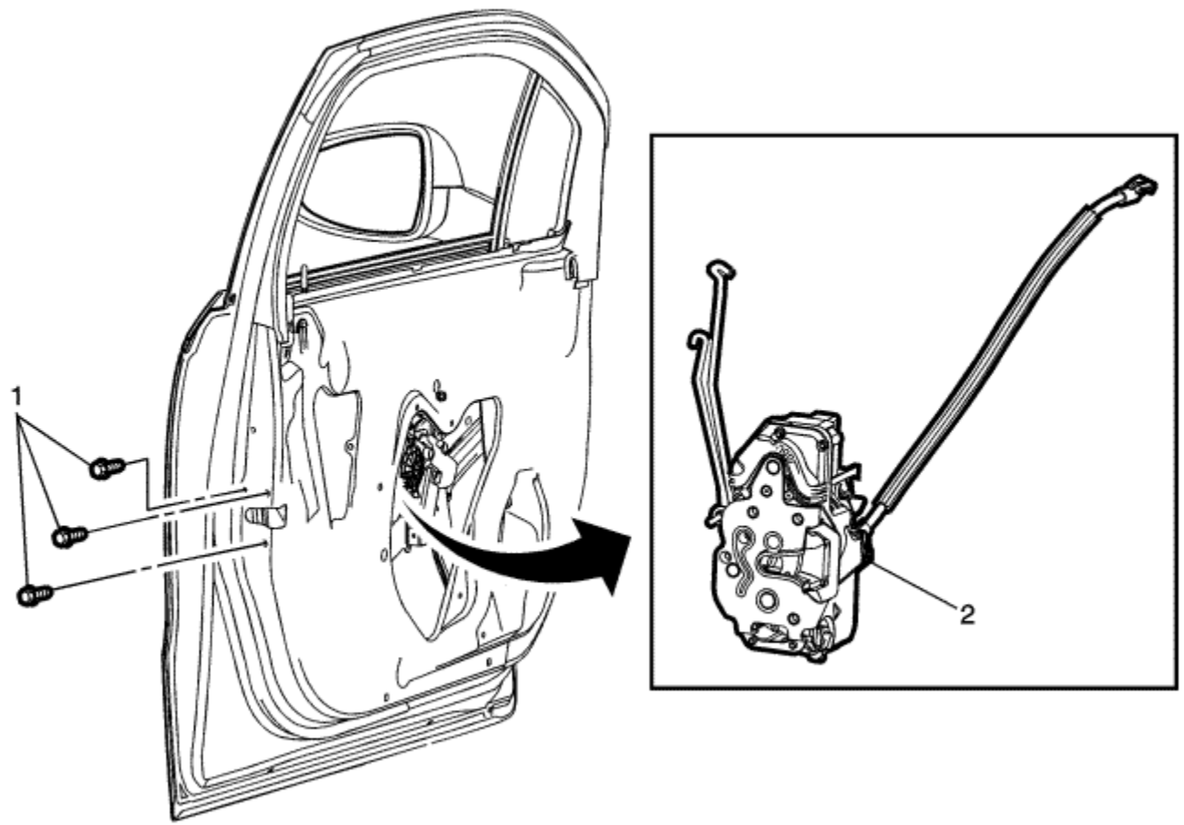

Callout	Component Name
Preliminary Procedures	

1. Release tension on the window by lowering the window slightly.
2. Reposition the rear half of the front side door window regulator. Refer to Front Side Door Window Regulator Replacement .
3. Reposition the front side door rear channel of the front side door window outer weatherstrip. Refer to Front Side Door Window Outer Weatherstrip Replacement .

1	Front Side Door Lock Screws (Qty: 3) **Caution:** Refer to Fastener Caution in the Preface section. **Procedure** Disconnect the door lock electrical connector. **Tighten** 10 N·m (89 lb in)
2	Front Side Door Lock **Procedure** 1. Unclip the outside handle rod from the door lock. 2. Turn the lock assembly releasing the lock cylinder rod from the lock. 3. Transfer components as necessary. 4. In order to prevent outside handle lever pre-load, latch, outside handle, handle bracket and cover/cap shall be fully secured to the door prior to securing integral latch clip to outside handle rod. Integral latch clip shall be in the full up position while securing to outside handle rod. Refer to Front Side Door Outside Handle Rod Adjustment . **Tip** Inspect the door lock system for proper operation before installing the door trim panel.

© Copyright Chevrolet. All rights reserved

Rear Side Door Lock Replacement

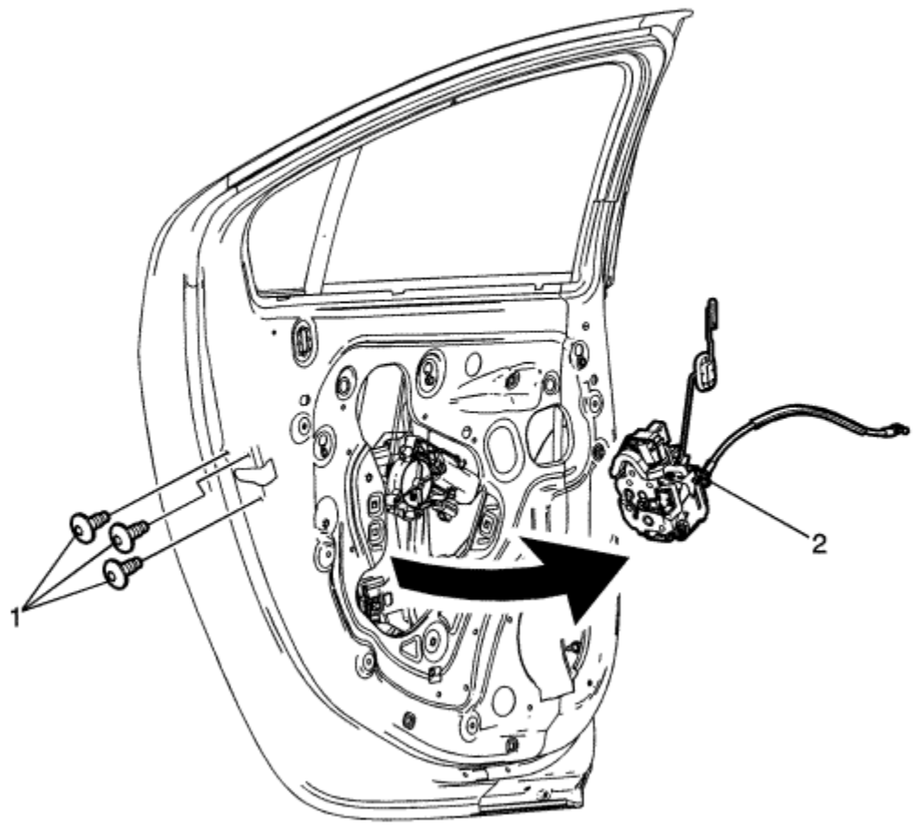

Callout	Component Name
Preliminary Procedures 1. Remove the rear side door rear channel. Refer to Rear Side Door Window Rear Channel Replacement . 2. Disconnect the battery negative cable. Refer to Battery Negative Cable Disconnection and Connection .	

1	Rear Side Door Lock Screws (Qty: 3) **Caution:** Refer to Fastener Caution in the Preface section. **Procedure** 1. Disconnect the door lock electrical connector. 2. Unclip the outside handle rod from the lock. **Tighten** 10 N·m (89 lb in)
2	Rear Side Door Lock **Procedure** 1. Transfer components as necessary. 2. In order to prevent outside handle lever pre-load, latch, outside handle, handle bracket and cover/cap shall be fully secured to the door prior to securing integral latch clip to outside handle rod. Integral latch clip shall be in the full up position while securing to outside handle rod. Refer to Rear Side Door Outside Handle Rod Adjustment . 3. Inspect the door lock system for proper operation before installing the door trim panel.

© Copyright Chevrolet. All rights reserved

Front Side Door Locking Rod Replacement

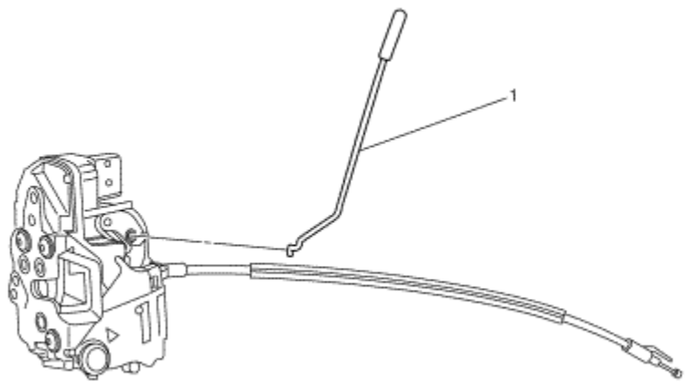

Callout	Component Name
Preliminary Procedure Remove the front side door lock. Refer to Front Side Door Lock Replacement .	
1	Front Side Door Locking Rod **Procedure** Unhook the lock rod from the lock assembly. **Tip** Inspect the door lock system for proper operation before installing the door trim panel.

© Copyright Chevrolet. All rights reserved

Front Side Door Lock Cylinder Rod Replacement

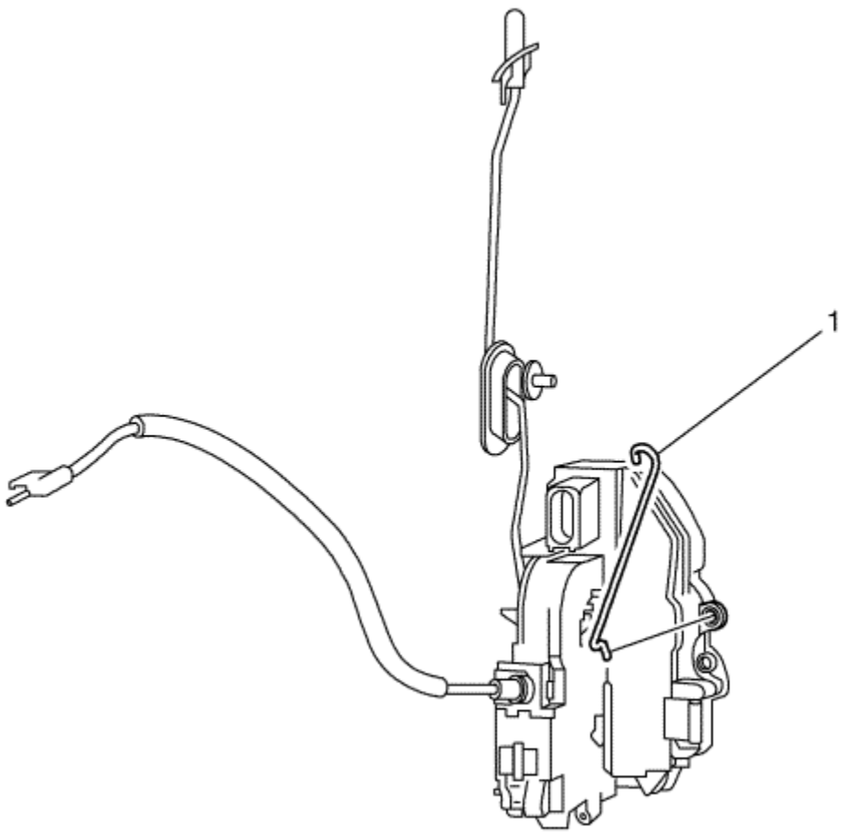

Callout	Component Name
Preliminary Procedure Remove the front side door lock. Refer to Front Side Door Lock Replacement .	
	Front Side Door Lock Cylinder Rod

1	**Procedure** Unhook the rod from the door lock. **Tip** Inspect the door lock system for proper operation before installing the door trim panel.

© Copyright Chevrolet. All rights reserved

Front Side Door Outside Handle Rod Adjustment

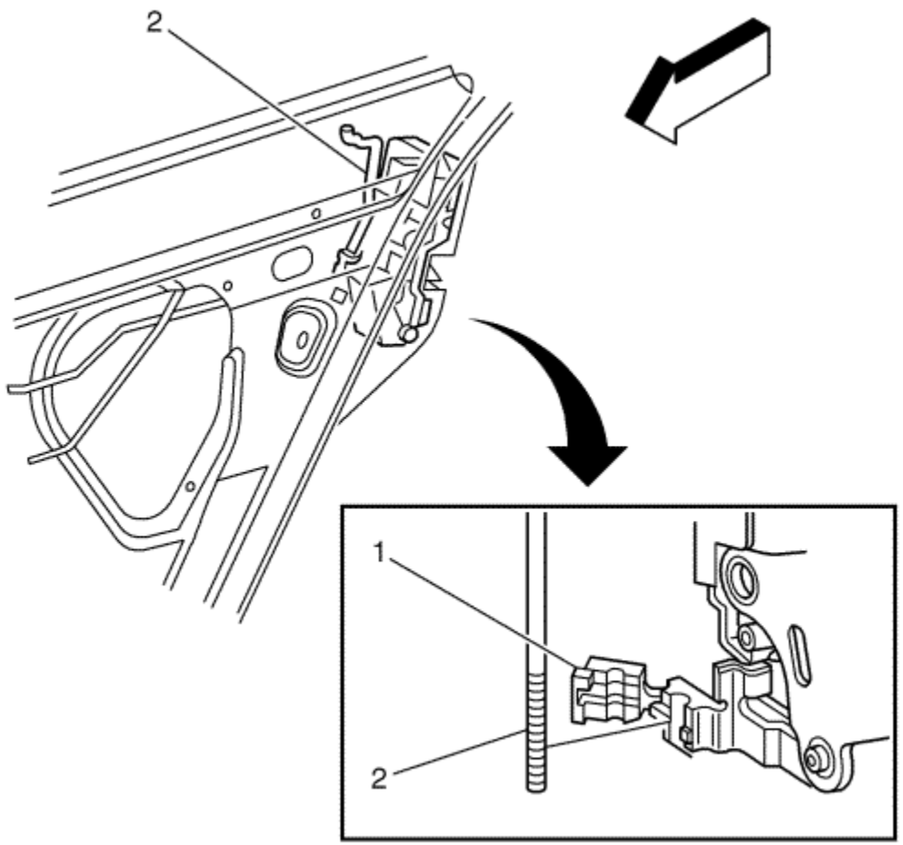

Callout	Component Name
Preliminary Procedures	
1. Place the window in the full up position. 2. Remove the front side door trim panel. Refer to Front Side Door Trim Replacement .	

1	Front Side Door Outside Handle Rod Clip **Procedure** 1. Remove arm rest support. 2. Remove the water deflector. 3. Remove the 2 rear front side door window outer weatherstrip bolts and reposition the weatherstrip. Refer to Front Side Door Window Outer Weatherstrip Replacement . **Tip** Use a suitable tool to open the clip from the threaded rod connecting the lock to the outside handle.
2	Front Side Door Outside Handle Rod **Procedure** In order to prevent outside handle lever pre-load, latch, outside handle, handle bracket and cover/cap shall be fully secured to the door prior to securing integral latch clip to outside handle rod. Integral latch clip shall be in the full up position while securing to outside handle rod. **Tip** Inspect the door lock system for proper operation before installing the door trim panel.

© Copyright Chevrolet. All rights reserved

Front Side Door Outside Handle Rod Replacement

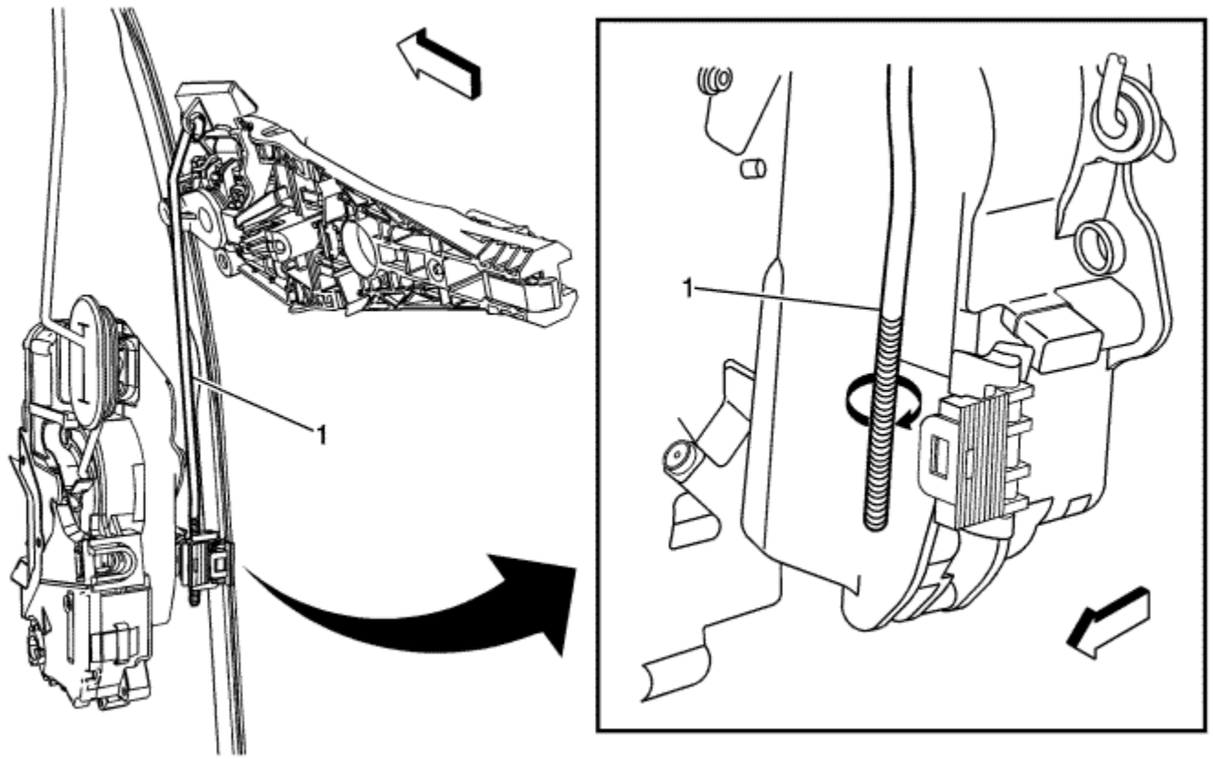

Callout	Component Name
Preliminary Procedure Remove the front side door outside handle bracket. Refer to Front Side Door Outside Handle Bracket Replacement .	
	Front Side Door Outside Handle Rod

1	**Procedure** Unhook the rod from the handle bracket. **Tip** Inspect the door lock system for proper operation before installing the door trim panel.

© Copyright Chevrolet. All rights reserved

Rear Side Door Locking Rod Replacement

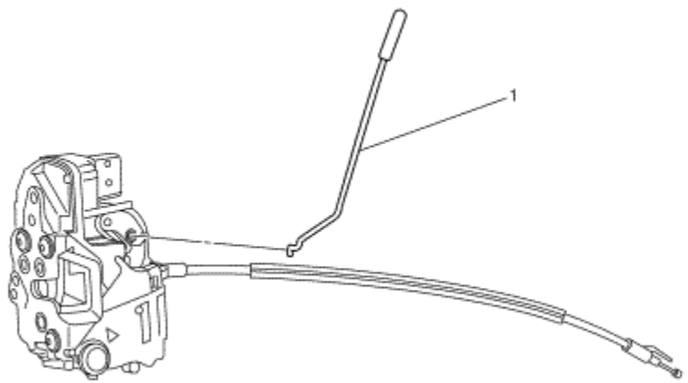

Callout	Component Name
Preliminary Procedure Remove the rear side door lock. Refer to Rear Side Door Lock Replacement .	
1	Rear Side Door Locking Rod **Procedure** Unhook the locking rod from the lock. **Tip** Inspect the door lock system for proper operation before installing the door trim panel.

© Copyright Chevrolet. All rights reserved

Rear Side Door Outside Handle Rod Adjustment

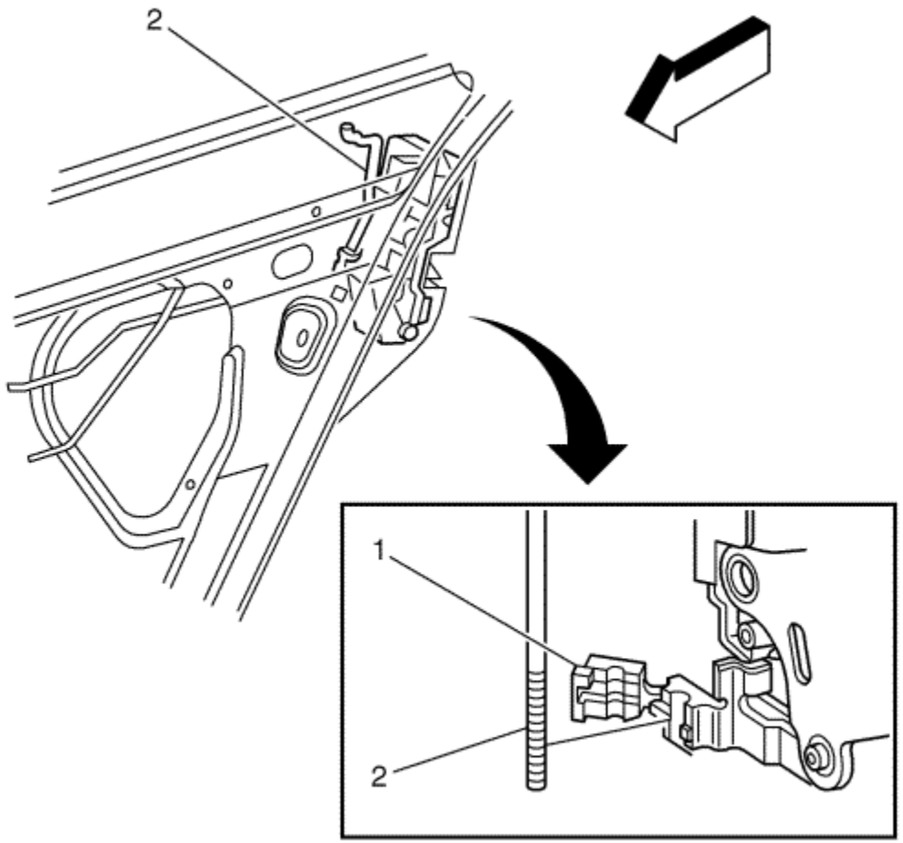

Callout	Component Name
Preliminary Procedures Remove the rear side door window rear channel. Refer to Rear Side Door Window Rear Channel Replacement .	
	Rear Side Door Outside Handle Rod Clip

1	**Procedure** Open the handle rod clip at the end of the handle rod. **Tip** Use a suitable tool to open the clip from the threaded rod connecting the lock to the outside handle.
2	Rear Side Door Outside Handle Rod **Procedure** In order to prevent outside handle lever pre-load, latch, outside handle, handle bracket and cover/cap shall be fully secured to the door prior to securing integral latch clip to outside handle rod. Integral latch clip shall be in the full up position while securing to outside handle rod. **Tip** Inspect the door lock system for proper operation before installing the door trim panel.

© Copyright Chevrolet. All rights reserved

Rear Side Door Outside Handle Rod Replacement

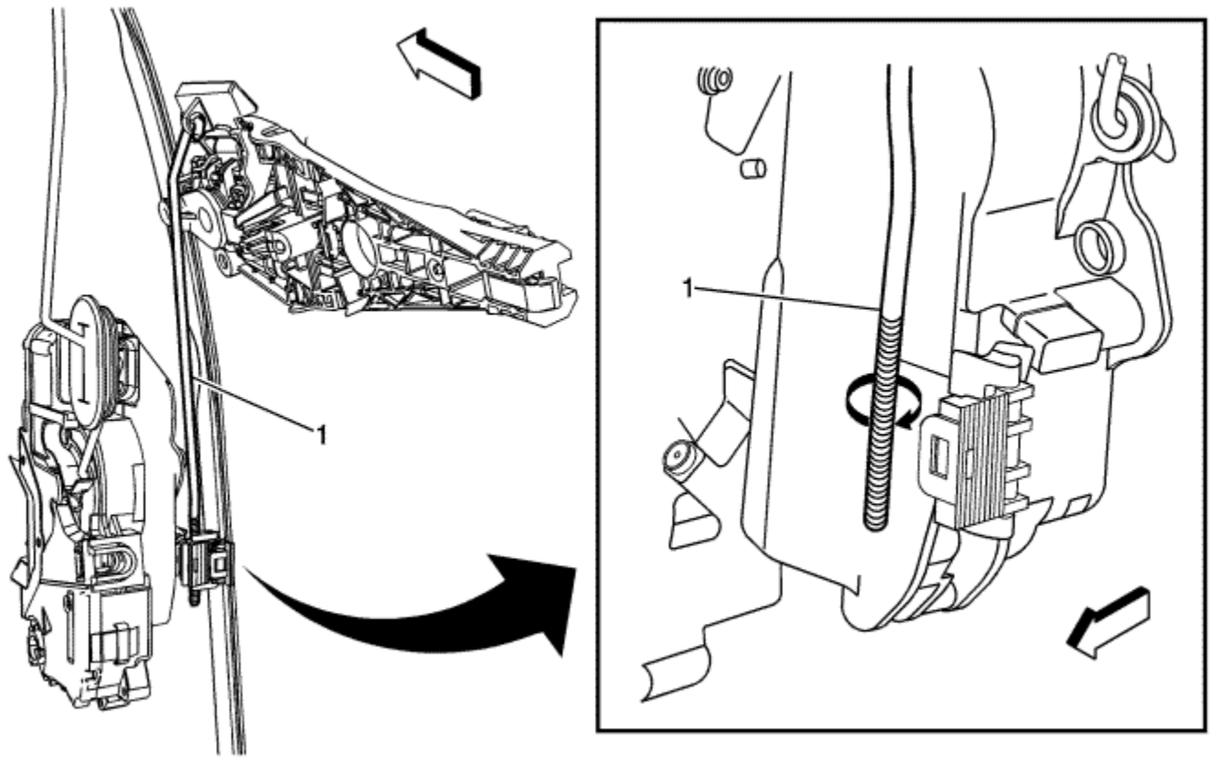

Callout	Component Name
Preliminary Procedure Remove the rear side door outside handle bracket. Refer to Rear Side Door Outside Handle Bracket Replacement .	
	Rear Side Door Outside Handle Rod

1	**Procedure** Unclip the rod from the outside handle bracket. **Tip** Inspect the door lock system for proper operation before installing the door trim panel.

© Copyright Chevrolet. All rights reserved

Front Side Door Lock Striker Adjustment

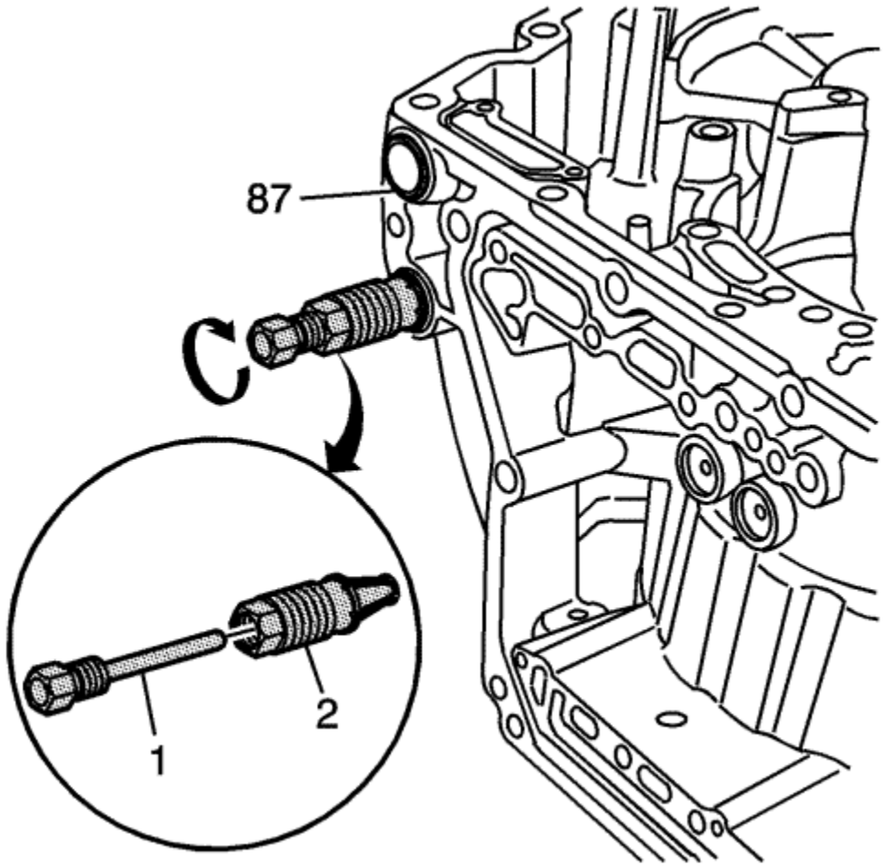

Note: To determine if the striker adjustment is required, proceed as follows.

1. Ensure that the door is properly aligned with the door opening before proceeding with the striker adjustment.
2. Open and close the door on the striker (2). Note if the door drags on the striker causing the door to move upward or downward upon contact with the striker. Also note the closing effort to fully engage the latch.

3. The striker plate weld nuts (1) are welded in place. Using a soft marker, mark around the striker (2) for reference of the original position. Loosen the striker screws just enough to allow the movement of the door striker and shims if equipped.

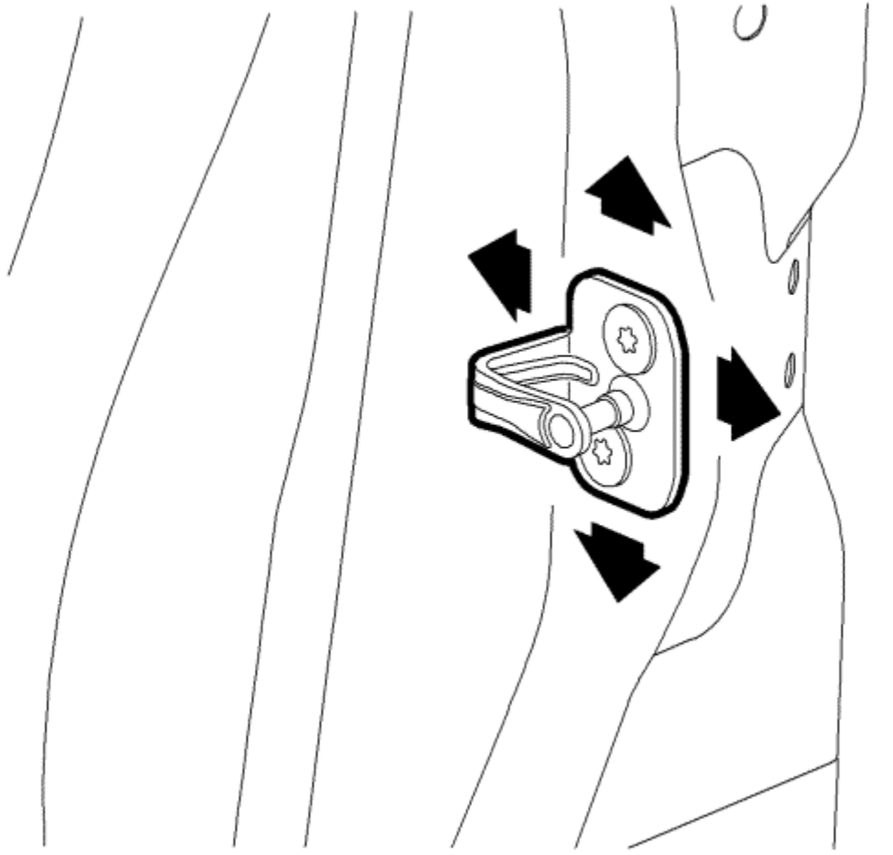

4. Adjust the door striker up or down and inboard or outboard as required.
5. Move the striker to eliminate drag on the striker and door latch and to achieve proper door position within door opening. Start with up/down position, then position the striker to achieve proper alignment to the door opening. Set the in/out adjustment for proper door seal engagement ensuring that the door closing efforts are correct.

   Caution: Refer to Fastener Caution in the Preface section.

   Tighten
   22 N·m (16 lb ft).

6. Adjust the striker and add spacers as required.
7. Inspect the door for proper operation.
8. Close the door.

© Copyright Chevrolet. All rights reserved

Front Side Door Lock Striker Replacement

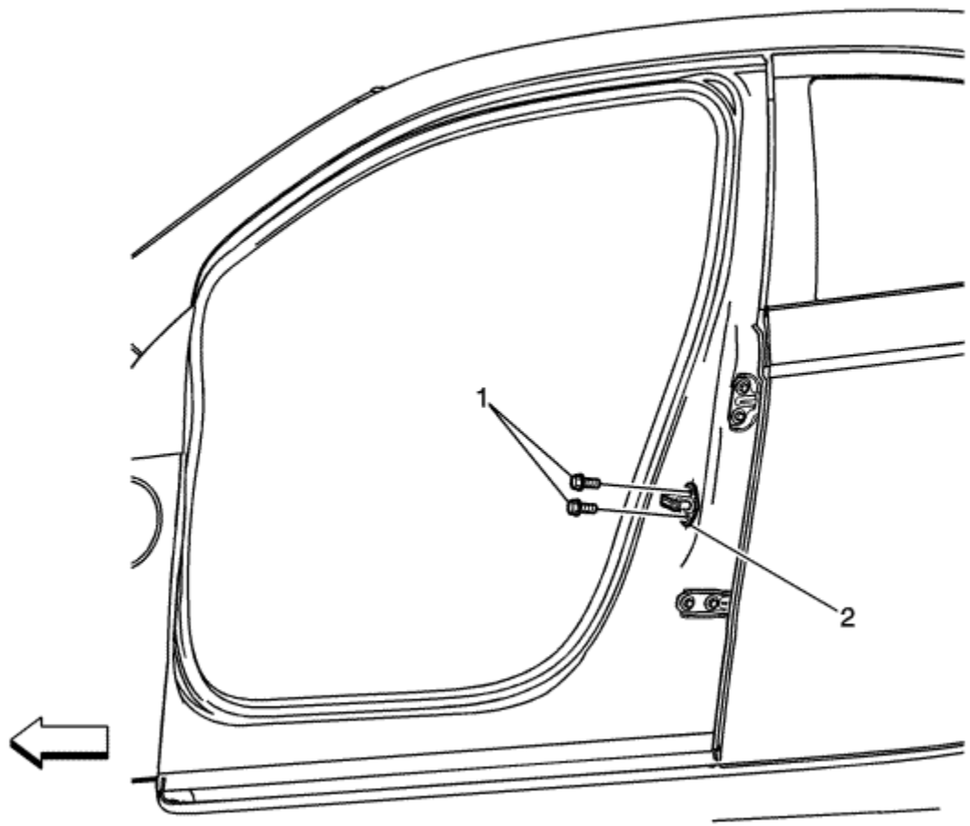

Callout	Component Name
1	Front Door Lock Striker Screws (Qty: 2) **Caution:** Refer to Fastener Caution in the Preface section. **Tighten** 22 N·m (16 lb ft)

2	Front Door Lock Striker **Procedure** Ensure the alignment of the striker. Refer to Front Side Door Lock Striker Adjustment .

© Copyright Chevrolet. All rights reserved

Tailgate Latch Striker Replacement

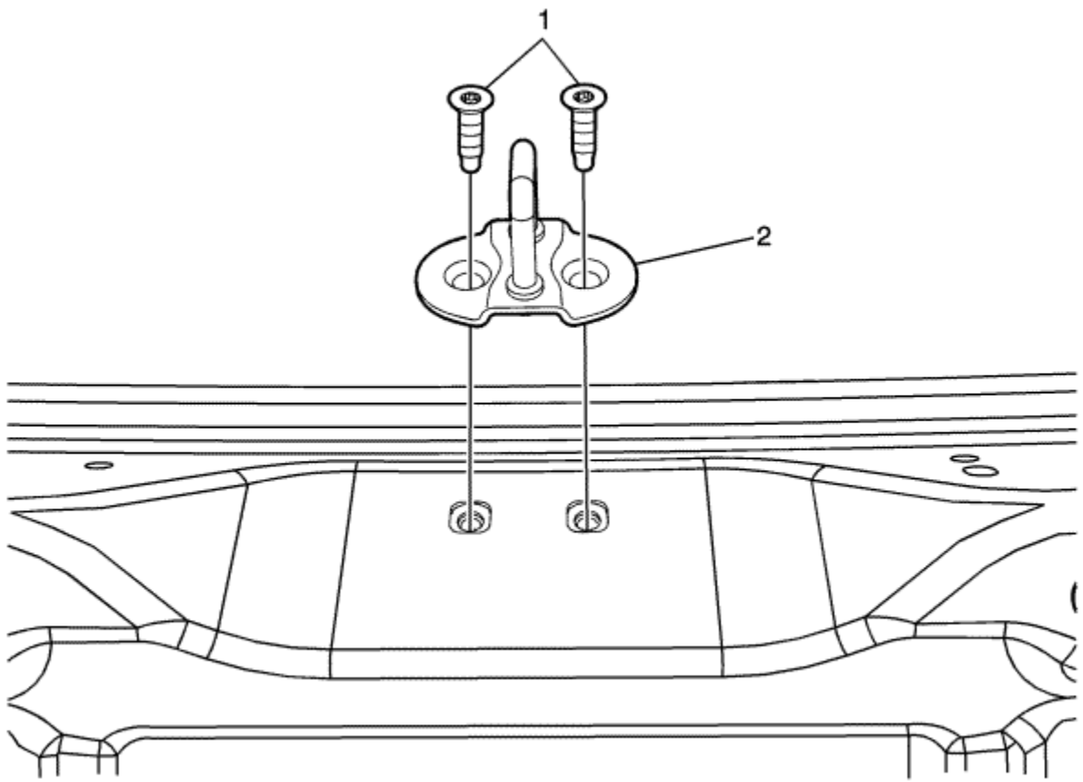

Callout	Component Name
Preliminary Procedure Remove the rear end trim finish panel. Refer to Rear End Trim Finish Panel Replacement .	
	Tailgate Latch Striker Bolt (Qty: 2)

1	**Caution:** Refer to Fastener Caution in the Preface section. **Procedure** Mark the location of the striker with a grease pencil to ensure proper alignment during installation. **Tighten** 25 N·m (18 lb ft)
2	Tailgate Latch Striker **Procedure** Adjust the tailgate if needed. Refer to Tailgate Adjustment .

© Copyright Chevrolet. All rights reserved

Rear Side Door Lock Striker Adjustment

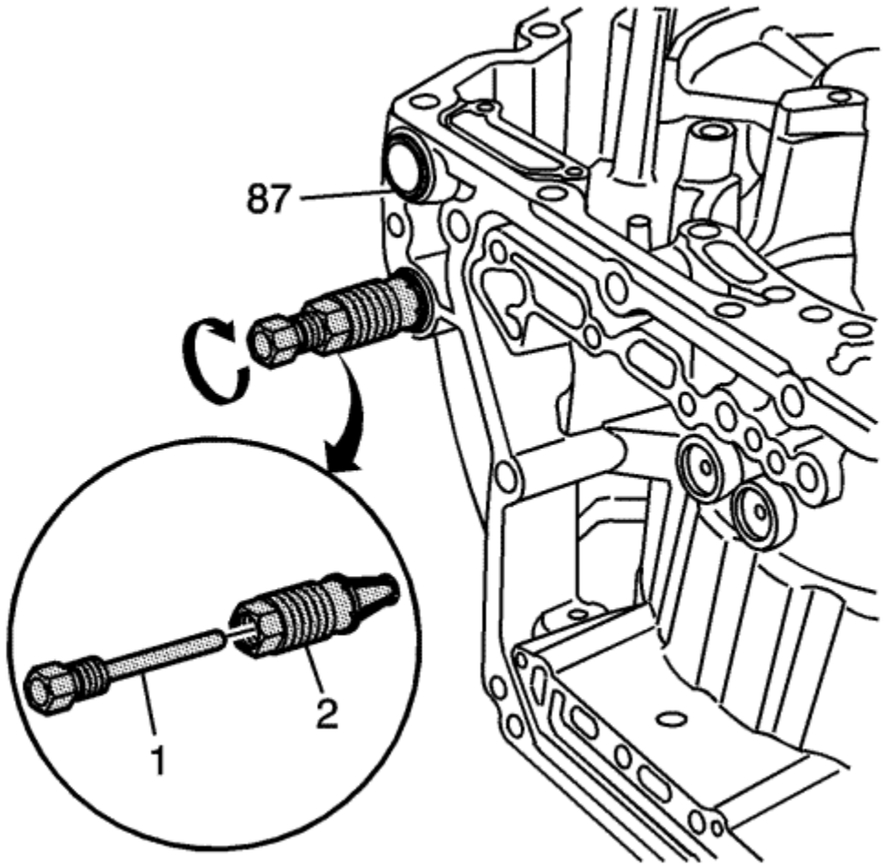

Note: To determine if the striker adjustment is required, proceed as follows.

1. Ensure that the door is properly aligned with the door opening before proceeding with the striker adjustment.
2. Open and close the door on the striker (2). Note if the door drags on the striker causing the door to move upward or downward upon contact with the striker. Also note the closing effort to fully engage the latch.

3. The striker plate weld nuts (1) are welded in place. Using a soft marker, mark around the striker (2) for reference of the original position. Loosen the striker screws just enough to allow the movement of the door striker and shims if equipped.

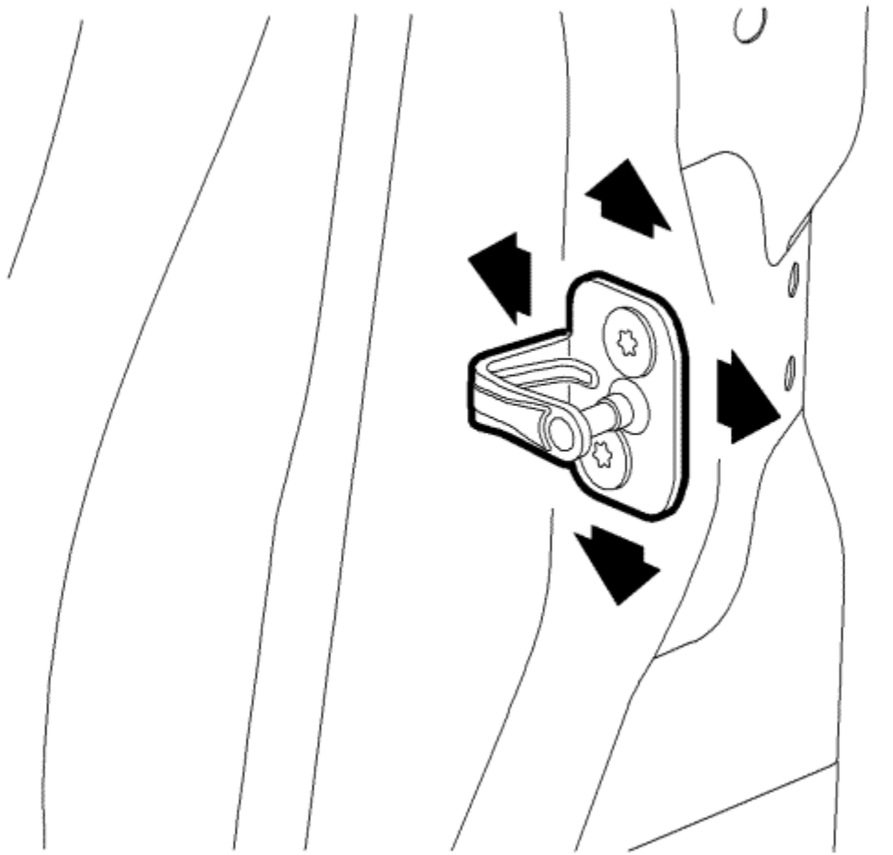

4. Adjust the door striker up or down and inboard or outboard as required.
5. Move the striker to eliminate drag on the striker and door latch and to achieve proper door position within door opening. Start with up/down position, then position the striker to achieve proper alignment to the door opening. Set the in/out adjustment for proper door seal engagement ensuring that the door closing efforts are correct.

   Caution: Refer to Fastener Caution in the Preface section.

6. Adjust the striker and add spacers as required.

   Tighten
   Tighten the screws to 24 N·m (18 lb ft).

7. Inspect the door for proper operation.

8. Close the door.

© Copyright Chevrolet. All rights reserved

Rear Side Door Lock Striker Replacement

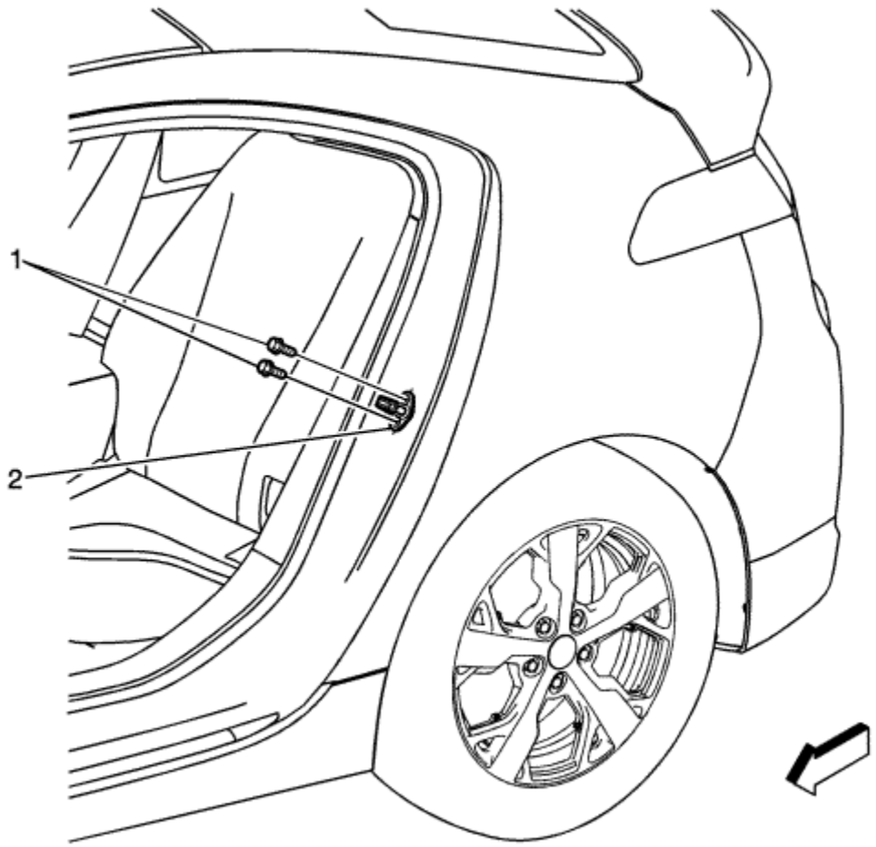

Callout	Component Name
1	Rear Side Door Lock Striker Screws (Qty: 2) **Caution:** Refer to Fastener Caution in the Preface section. **Tighten** 22 N·m (16 lb ft)

2	Rear Side Door Lock Striker **Procedure** Ensure the alignment of the striker. Refer to Rear Side Door Lock Striker Adjustment .

© Copyright Chevrolet. All rights reserved

Rear Compartment Lid and Fuel Filler Door Release Switch Replacement

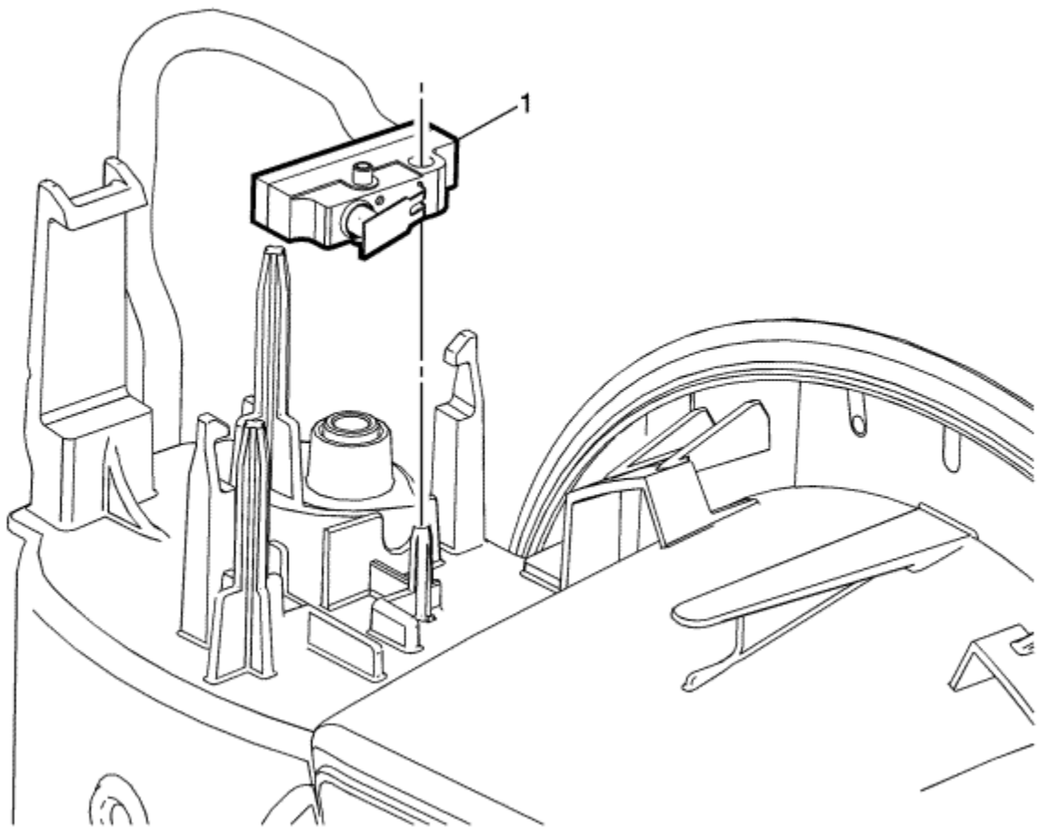

Callout	Component Name
Preliminary Procedure Remove the fuel tank filler door lock actuator. Refer to Fuel Tank Filler Door Lock Actuator Replacement .	
	Rear Compartment Lid and Fuel Filler Door Release Switch

1	**Procedure** 1. Disconnect the release switch electrical harness from the fuel tank filler pipe. 2. Remove the release switch from the housing by lifting up and out.

© Copyright Chevrolet. All rights reserved

Opening the Fuel Tank Filler Door when the Door Lock Malfunctions

1. Remove the right rear wheelhouse panel liner. Refer to Rear Wheelhouse Panel Liner Replacement .
2. Reach in behind the fuel filler pipe housing and manually slide the actuator rod forward, using light pressure, to override the actuator to release the fuel tank filler door.

© Copyright Chevrolet. All rights reserved

Fuel Tank Filler Door Lock Release Switch Replacement

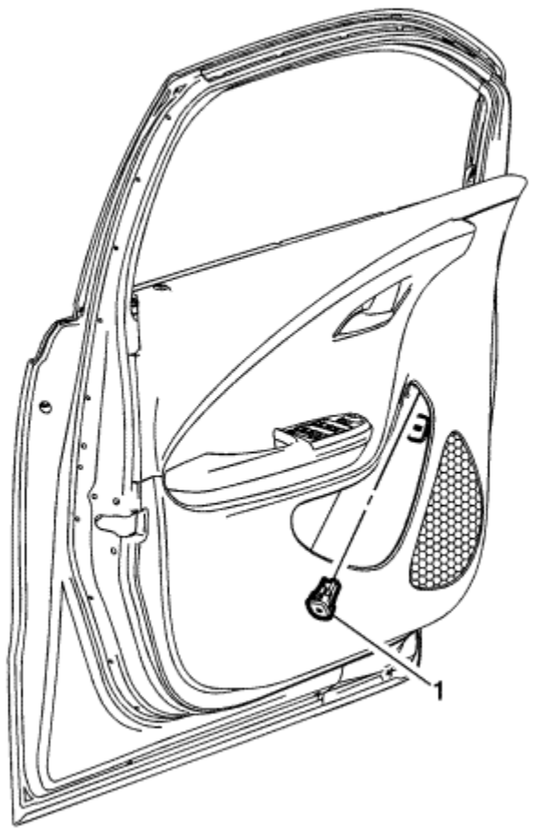

Callout	Component Name
	Preliminary Procedure **Remove the driver door trim panel. Refer to Front Side Door Trim Replacement**
	Fuel Tank Filler Door Lock Release Switch

1	**Procedure** 1. Push in on the integral tabs from the inside of the door trim panel. Push outward to release the switch from the door trim panel. 2. Disconnect the electrical connector.

© Copyright Chevrolet. All rights reserved

Charger Door Release Switch Replacement

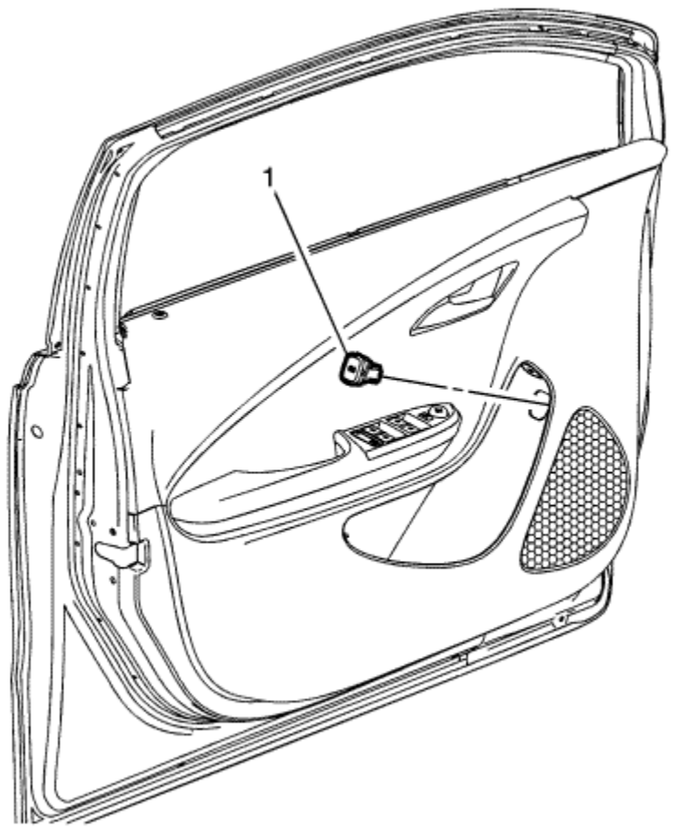

Callout	Component Name
Preliminary Procedure Remove the driver door trim panel. Refer to Front Side Door Trim Replacement	
	Charger Door Release Switch

1	**Procedure** 1. Push in on the integral tabs from the inside of the door trim panel. Push outward to release the switch from the door trim panel. 2. Disconnect the electrical connector.

© Copyright Chevrolet. All rights reserved

Tailgate Release Switch Replacement

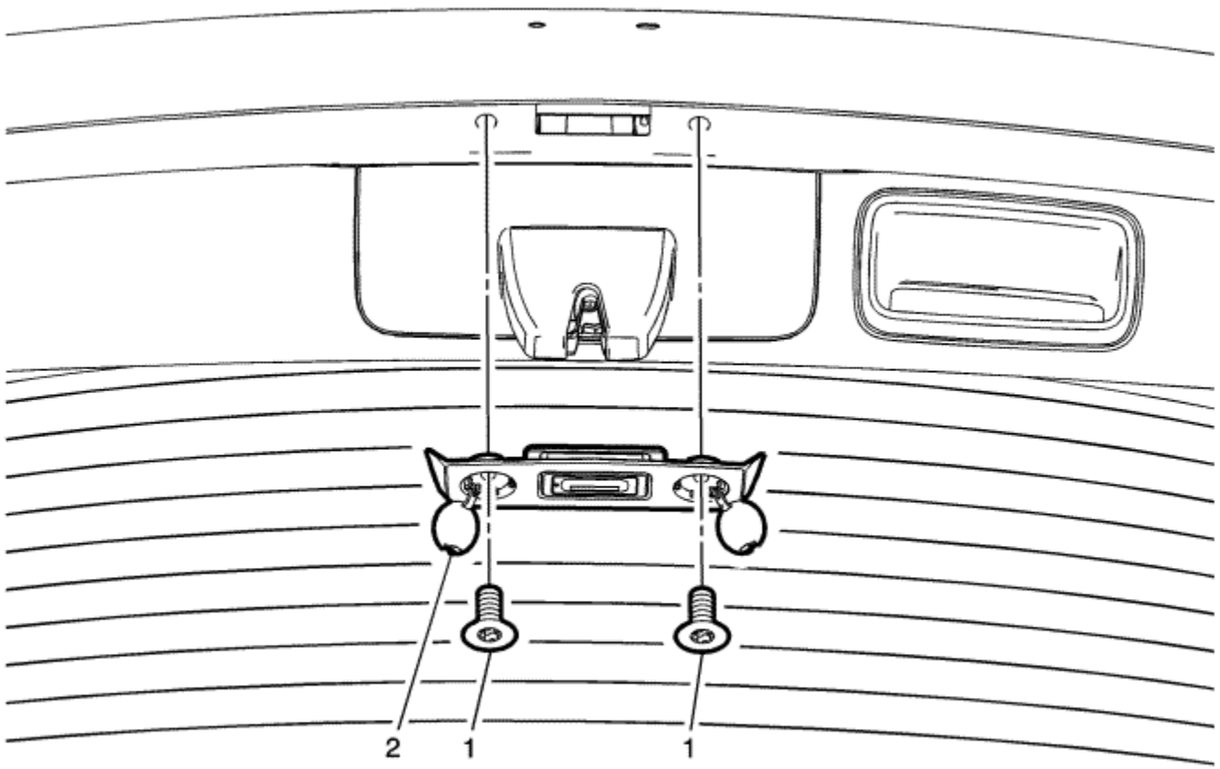

Callout	Component Name
Preliminary Procedure Remove the tailgate lower trim finish panel. Refer to Tailgate Lower Trim Finish Panel Replacement .	
	Tailgate Release Switch Screw

1	**Caution:** Refer to Fastener Caution in the Preface section. **Procedure** Open the screw cover caps. **Tighten** 10 N·m (89 lb in)
2	Tailgate Release Switch **Procedure** Disconnect the electrical connector.

© Copyright Chevrolet. All rights reserved

Charge Port Door Description and Operation

Charge Port System Components

The charge port system consists of the following components:

- Charge port door release switch
- Charge port door position sensor
- Charge port door motor
- Charge port door relay
- Hybrid powertrain control module 2

Charge System Overview

This alternative propulsion vehicle has the ability to store electrical energy from an electrical outlet, using a high voltage onboard charger, in a Rechargeable Energy Storage System (RESS). An RESS has a larger capacity than other alternative propulsion vehicle's Energy Storage System (ESS) allowing this vehicle to have fuel economy gains over their ESS equipped counterparts. Fuel economy gains are only realized when the customer uses the plug-in charging function; however, the customer is not required to use this feature for the vehicle to function. It continues to operate as an Extended Range Electric Vehicle if this functionality is not exercised.

The purpose of the plug in charging function is to provide the operator a means to charge their vehicle's RESS. This function is designed to safely transfer energy from the electrical power grid in order to complete a charge process in a time period not to exceed 12 hours.

Charge Port System Operation

High Voltage Battery Charging is initiated when the operator has completed all of the following steps:

- Transmission Shift Lever Position is in PARK
- Ignition Switch (Key) is in OFF position
- Pressing the charge port door release switch
- Opening the charge port door
- Charging cord has been plugged into a powered wall outlet
- Charging cord has been connected to the vehicle

The hybrid powertrain control module 2 monitors the voltage values of the charge port wake-up signal circuit and the charge port request signal circuit. When the charge port

door release switch is pressed, the switch contact closes and provides B+ voltage to the two signal circuits. The hybrid powertrain control module 2 detects the voltage on the signal circuits and provides a 12 V pulse to the charge port relay, the relay briefly becomes energised which then allows B+ voltage to the charge port door latch which activates and releases the charge port door.

Charge Port Ajar Message

When the ignition is ON, the hybrid powertrain control module 2 supplies a 5V signal to the charge port door position switch through the charge port door sensor signal circuit. The charge port door position switch contains a resistor ladder interface for switch position between two resistors for sensing used by the hybrid powertrain control module 2 to determine if the charge port door is in the open position or the closed position. The hybrid powertrain control module 2 sends a serial data message to the driver information centre in the instrument panel cluster to display the Charge Door Open message.

&#169© Copyright Chevrolet. All rights reserved

Door Ajar Indicator Description and Operation

Door Ajar Indicator System Components

The door ajar indicator system consists of the following components:

- Body control module (BCM)
- Instrument cluster
- Driver door latch
- Passenger door latch
- Left rear door latch
- Right rear door latch
- Driver window motor
- Passenger window switch
- Left rear window switch
- Right rear window switch

Driver Door Ajar

The driver window motor supplies a 12 volt signal to the door ajar switch within the door latch, when the driver door is open the door ajar switch closes pulling the 12 volts signal low. When the driver window motor detects the drop in the 12 volt signal circuit, it will then communicate this status to the BCM via local interconnect network (LIN) bus. The BCM communicates with the instrument cluster via serial data message. The instrument panel cluster, upon receipt of this serial data message, will illuminate the driver door ajar indicator and also send a serial data message to the radio to activate the door ajar audible warning when the vehicle speed is greater then 8 km/h (5 MPH).

All Passenger Doors Ajar

The passenger window motor, the left rear window switch and right rear window switches each supplies a 12 volt signal to their respective door ajar switch within the door latch, when the a door is open the door ajar switch closes pulling the 12 volts signal low. When the passenger window motor, the left rear window switch or right rear window detects the drop in the 12 volt signal circuit, it will then communicate this status to the BCM via local interconnect network (LIN) bus. The BCM communicates with the instrument cluster via serial data message. The instrument panel cluster, upon receipt of this serial data message, will illuminate the appropriate door ajar indicator and also send a serial data message to the radio to activate the door ajar audible warning when the vehicle speed is greater then 8 km/h (5 MPH).

&#169© Copyright Chevrolet. All rights reserved

Fuel Fill Door Description and Operation

Refuelling System Components

The refuelling system consists of the following components:

- Refuel request switch
- Fuel door position sensor
- Fuel door latch
- Hybrid powertrain control module 2

Refuelling System Overview

To effectively manage evaporative fuel emissions, hybrid vehicles with extended electrical range capability must be equipped with a "pressurised" fuel system that can be sealed from atmosphere when the internal combustion engine is not operating.

When the fuel system is sealed, the internal pressure will vary with changes in temperature, such as the natural variation in ambient temperature that occurs throughout the day. To maintain evaporative emissions compliance, vehicle refuelling can only be permitted once the fuel system has been adequately vented to atmosphere through the carbon canister. The Refuelling Management feature described in this document provides the necessary means to regulate customer access to the fuel cap and manage venting of the fuel system in order to facilitate vehicle refuelling without compromising evaporative emissions compliance.

Refuelling System Operation

When the refuel request switch is pressed, a 5 V signal is sent to the hybrid powertrain control module 2 which will then command the fuel system to vent and will send a serial data message to the driver information centre to display the Wait To Refuel message.

After the system has been vented, the hybrid powertrain control module 2 will send a command to unlock the fuel filler door and will send a serial data message to the driver information centre to display the Ready To Refuel message. After the vehicle has been refueled, the hybrid powertrain control module 2 will send a serial data message to the driver information centre to display the Close Fuel Door message until the fuel filler door is closed. The hybrid powertrain control module 2 will then command the fuel filler door to lock 5 seconds after the fuel filler door is closed or the vehicle speed exceeds 40 km/h (25 mph).

&#169© Copyright Chevrolet. All rights reserved

Tailgate Ajar Indicator Description and Operation

Hatch Open Indicator

The body control module (BCM) monitors the voltage level of the rear hatch ajar signal circuit which is normally at the system voltage when the hatch is closed. When the hatch is ajar or open, a switch within the rear hatch latch closes providing a path to ground for the hatch ajar signal circuit. The voltage within the signal circuit will then drop to 0 volts, the BCM will then detect the voltage drop and will send a serial data message to the instrument panel cluster (IPC). The IPC will then display an icon of the vehicle with the hatch open.

© Copyright Chevrolet. All rights reserved

Power Door Locks Description and Operation

Door Lock System Components

The power door lock system consists of the following components:

- Central door lock switch (located with the radio/HVAC controls)
- Rear window/door lockout switch (located on the driver window switch)
- Body control module (BCM)
- Driver door latch
- Passenger door latch
- Left rear door latch
- Right rear door latch
- Door lock security PCB relay

Door Lock and Unlock Operation

When a door lock switch is activated in the lock or unlock position the BCM will receive a ground signal on either the door lock switch lock or unlock signal circuits.

The BCM, upon receipt of a lock switch lock or unlock signal, will supply battery voltage to the door lock actuator lock or unlock control circuits. Since the opposite side of the lock actuator is connected to ground through the other lock actuator control circuit, the doors will then lock or unlock as commanded.

The following three circuits are used to operate the lock:

- Driver door unlock
- Passenger door unlock
- All door lock

The driver door lock actuator is isolated so it can be unlocked by itself using the keyless entry transmitter.

Child Door Lockout Operation

The operator has the option to disable the interior rear door handles to prevent the unauthorised opening of the rear door doors while still retaining normal driver and passenger door handle functions. The driver door window switch has a lockout switch that will disable the interior rear door handles and the rear window switches. The rear

door latches contain switches that are open when the rear doors are unlocked and closed when the rear doors are locked. The operator will first lock all the doors by pressing the central door lock switch. When the lockout switch is pressed, the BCM will confirm that the rear doors have been locked, if the rear doors are locked the BCM will then command the child lockout latches. The driver and passenger doors will still function normally by pressing the central door lock switch which will unlock the doors but the child lockout latches will continue to disable the interior rear door handles. Pressing the lockout switch again will signal a command to the BCM to unlatch the rear doors, restore normal interior rear door handle functions and restore normal function of the rear window switches. If the lockout indicator flashes while trying to lockout the rear door handles means one or both rear door latches are not locked and the child lockout system will not function.

&#169© Copyright Chevrolet. All rights reserved

Rear Hatch/Gate Description and Operation

Rear Hatch Release System Components

- Tailgate Latch
- Tailgate Release Switch
- Tailgate Relay
- Body Control Module
- 15 A Fuse

Rear Hatch Release Operation

The rear hatch can be released by placing the transaxle in park, unlocking all the doors and then pressing the touchpad located at the rear of the vehicle above the number plate.

Pressing the touchpad closes a contact providing a ground for the rear closure handle switch open signal circuit. The body control module (BCM) will detect the voltage drop and will pulse 12 V to one side of the relay coil and provide a ground for the other side of the relay coil, this will briefly energise the tailgate relay closing the switch contacts and provide B+ voltage to the tailgate latch. When the doors are locked, the BCM will disable the rear hatch release system by ignoring the tailgate release switch input command and not providing 12 V for the tailgate relay.

&#169© Copyright Chevrolet. All rights reserved

Fastener Tightening Specifications

Application	Specification	
	Metric	English
Windscreen Washer Solvent Container Nut	9 N·m	80 lb in
Windscreen Wiper Arm Nut	42 N·m	31 lb ft
Windscreen Wiper Motor to Transmission Bolt	9 N·m	80 lb in
Windscreen Wiper Transmission Bolt	9 N·m	80 lb in

© Copyright Chevrolet. All rights reserved

Wiper/Washer Schematics

Windscreen Wiper/Washer

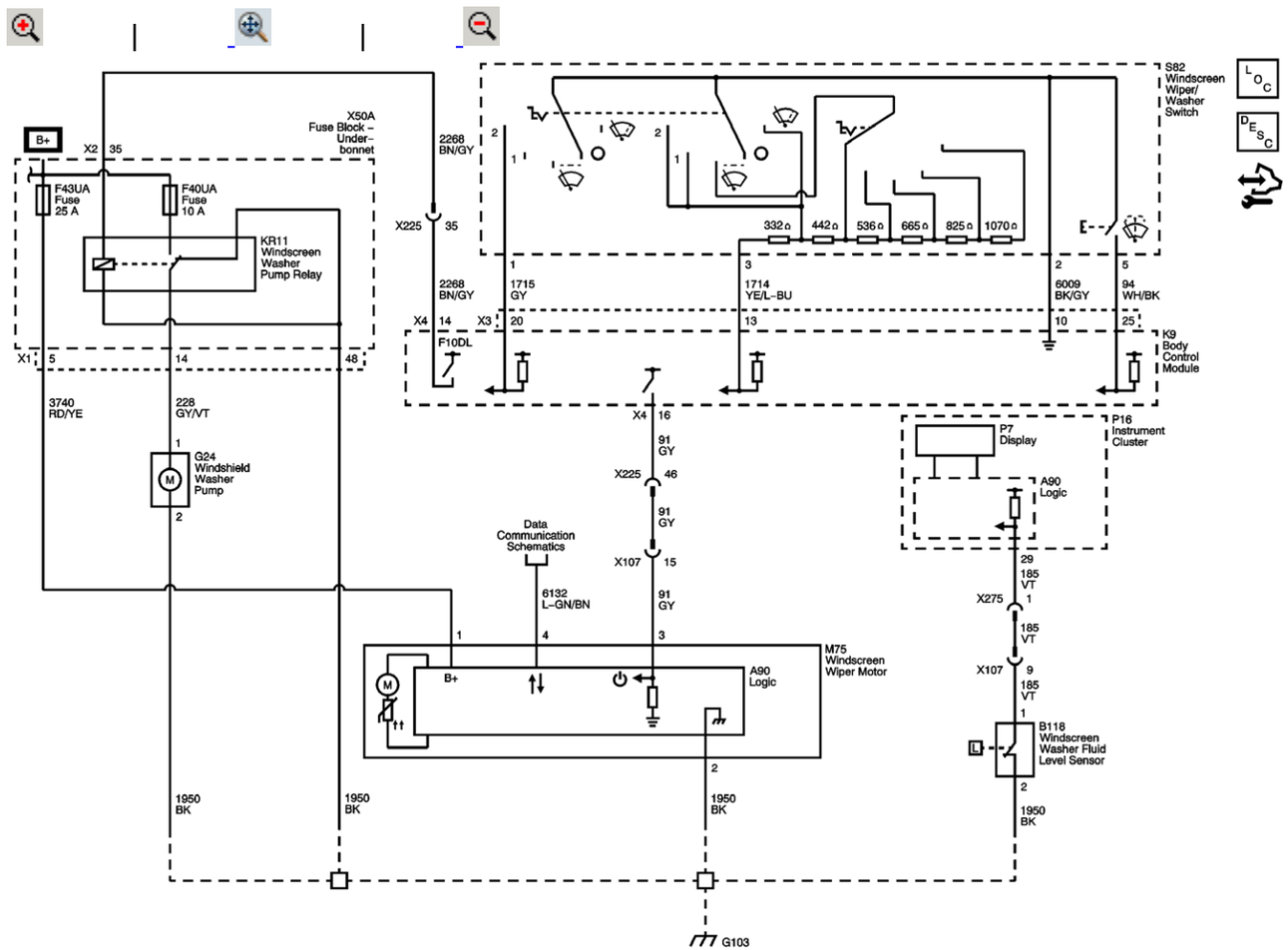

Master Electrical Component List

Wiper/Washer System Description and Operation

F6UA, F9UA, F22UA, F23UA, F40UA, F41UA and F43UA Fuses

F1DL, F2DL, F3DL, F4DL, F5DL, F6DL, F7DL, F10DL, F11DL and F15DL Fuses

Data Communication Schematics

G103, G104 and G105

© Copyright Chevrolet. All rights reserved

DTC B371A

Diagnostic Instructions

- Perform the Diagnostic System Check - Vehicle prior to using this diagnostic procedure.
- Review Strategy Based Diagnosis for an overview of the diagnostic approach.
- Diagnostic Procedure Instructions provides an overview of each diagnostic category.

DTC Descriptor

DTC B371A 39: Windscreen Wiper Motor Internal Malfunction

Circuit/System Description

B+ voltage and ground are supplied to the windscreen wiper motor. Whenever the ignition is ON or in accessory position, the body control module (BCM) sends the wiper/washer switch status through the LIN communication bus. If a fault occurs at any time in the windscreen wiper motor, the BCM will set the DTC.

Conditions for Running the DTC

The module runs the program to detect an internal fault when power up is commanded. The only requirements are voltage and ground. This program runs even if the voltage is out of the valid operating range.

Conditions for Setting the DTC

The BCM receives an invalid signal from the windscreen wiper motor.

Action Taken When the DTC Sets

The module refuses all additional inputs.

Conditions for Clearing the DTC

A current DTC clears when the diagnostic runs and passes.

Diagnostic Aids

Diagnose any communication DTCs (U-Codes) before attempting any diagnosis.

Reference Information

Schematic Reference

Wiper/Washer Schematics

Connector End View Reference

Component Connector End Views

Description and Operation

Wiper/Washer System Description and Operation

Electrical Information Reference

- Circuit Testing
- Connector Repairs
- Testing for Intermittent Conditions and Poor Connections
- Wiring Repairs

Scan Tool Reference

Control Module References for scan tool information

Circuit/System Verification

If DTC B371A is set, replace the M75 windscreen wiper motor.

Repair Instructions

Perform the Diagnostic Repair Verification after completing the diagnostic procedure.

Windscreen Wiper Motor Replacement

&#169© Copyright Chevrolet. All rights reserved

DTC B3873

Diagnostic Instructions

- Perform the Diagnostic System Check - Vehicle prior to using this diagnostic procedure.
- Review Strategy Based Diagnosis for an overview of the diagnostic approach.
- Diagnostic Procedure Instructions provides an overview of each diagnostic category.

DTC Descriptors

DTC B3873 01: Front Washer Relay Circuit Short to Battery

DTC B3873 02: Front Washer Relay Circuit Short to Ground

DTC B3873 04: Front Washer Relay Circuit Open

Diagnostic Fault Information

Circuit	Short to Ground	Open/High Resistance	Short to Voltage	Signal Performance
Windscreen Washer Switch Signal	2	1	1	--
Windscreen Washer Fluid Pump Control	1	1	2	--
Windscreen Washer Relay Control	B3873 02	1	2	-
Windscreen Washer Fluid Pump Ground	--	1	1	--
1. Front Washer Inoperative 2. Front Washer Always ON				

Circuit/System Description

The body control module (BCM) controls the windscreen washer fluid pump based on an input from the indicator/multifunction switch. The BCM monitors the washer switch through the windscreen washer switch signal circuit. When the wash switch is closed, ground is supplied to the front washer switch signal circuit. When this is the case, the BCM will command the windscreen washer fluid pump and the low speed wipers on.

Conditions for Running the DTC

- Vehicle in Service Mode
- The system voltage is between 9–16 V.

Conditions for Setting the DTC

- A short to ground or an open/high resistance is detected in the windscreen washer relay control circuit.
- A short to voltage is detected in the windscreen washer relay control circuit.

Action Taken When the DTC Sets

Washer operation is suspended.

Conditions for Clearing the DTC

A current DTC clears when the diagnostic runs and passes.

Reference Information

Schematic Reference

Wiper/Washer Schematics

Connector End View Reference

Component Connector End Views

Description and Operation

Wiper/Washer System Description and Operation

Electrical Information Reference

- Circuit Testing
- Connector Repairs
- Testing for Intermittent Conditions and Poor Connections
- Wiring Repairs

Scan Tool Reference

Control Module References for scan tool information

Circuit/System Testing

1. Vehicle OFF, Retained Accessory Power OFF, disconnect the harness connector X4 at the K9 Body Control Module.
2. Test for 120-160 Ω between control terminal 14 and ground.
   If less than the specified value, test the control circuit for a short to ground. If the circuit tests normal, replace the X50A under-bonnet fuse block.
   If greater than the specified value, test the control circuit for an open/high resistance or a short to voltage. If the circuit tests normal, replace the X50A under-bonnet fuse block.
3. If all circuits test normal, test or replace the K9 Body Control Module.

Repair Instructions

Perform the Diagnostic Repair Verification after completing the diagnostic procedure.

- Windscreen Washer Pump Replacement
- Fuse Block Replacement
- Control Module References for BCM replacement, setup and programming

&#169© Copyright Chevrolet. All rights reserved

Symptoms - Wiper/Washer Systems

Note: The following steps must be completed before using the symptom tables:

1. Perform Diagnostic System Check - Vehicle , in order to verify that all of the following conditions are true:
   - No DTCs are set.
   - The control modules can communicate via the serial data link.
2. Refer to Wiper/Washer System Description and Operation in order to familiarise yourself with the system functions.

Visual/Physical Inspection

- Inspect for aftermarket devices which may affect the operation of the windscreen wiper/washer system. Refer to Checking Aftermarket Accessories .
- Inspect the easily accessible or visible system components for obvious damage or conditions which may cause the symptom.
- Inspect the washer fluid reservoir for the proper fluid level.

Intermittent

Faulty electrical connections or wiring may be the cause of intermittent conditions. Refer to Testing for Intermittent Conditions and Poor Connections .

Symptom List

Refer to a symptom diagnostic procedure from the following list in order to diagnose the symptom:

- Windscreen Wiper System Malfunction
- Washer Malfunction

&#169© Copyright Chevrolet. All rights reserved

Windscreen Wiper System Malfunction

Diagnostic Instructions

- Perform the Diagnostic System Check - Vehicle prior to using this diagnostic procedure.
- Review Strategy Based Diagnosis for an overview of the diagnostic approach.
- Diagnostic Procedure Instructions provides an overview of each diagnostic category.

Diagnostic Fault Information

Circuit	Short to Ground	Open/High Resistance	Short to Voltage	Signal Performance
Windscreen Wiper Motor B+	1	1	--	--
Windscreen Wiper Motor LIN 1 Bus Signal	U1515, 1	U15175, 1	U1515, 1	B371A
Windscreen Wiper Motor Ground	--	1	1	--
12V Reference Voltage Right Steering Wheel Switch S70R	2	--	--	--
1. Wiper Motor Inoperative 2. Wipers Always ON				

Circuit/System Description

The Body Control Module (BCM) controls the wiper motor based on input from the windscreen wiper/washer switch. The BCM monitors the wiper/washer switch through two separate signal circuits and a ground circuit. The windscreen wiper switch high signal circuit is used to determine high speed wiper operation, the windscreen wiper switch low signal is used to determine low speed, intermittent, and mist operation through the use of a resistor ladder, and the windscreen washer switch signal circuit is used to determine washer operation. The BCM controls the windscreen wiper motor low, high, and intermittent operations through a serial data Local Interconnect Network 1 (LIN) Bus control circuit.

Reference Information

Schematic Reference

Wiper/Washer Schematics

Steering Wheel Secondary/Configurable Control Schematics

Connector End View Reference

Component Connector End Views

Description and Operation

Wiper/Washer System Description and Operation

Electrical Information Reference

- Circuit Testing
- Connector Repairs
- Testing for Intermittent Conditions and Poor Connections
- Wiring Repairs

Scan Tool Reference

Control Module References for scan tool information

Circuit/System Verification

1. Vehicle in Service Mode, S82 Windscreen Wiper/Washer Switch in the OFF position, verify the scan tool Windscreen Washer Switch parameter is INACTIVE.
   If not the specified value, refer to Washer Malfunction .
2. S82 Windscreen Wiper/Washer Switch in the OFF position, verify the scan tool Windscreen Wiper Switch parameter is OFF.
   If not the specified value, refer to Windscreen Wiper/Washer Switch Circuit Test.
3. S82 Windscreen Wiper/Washer Switch in the OFF position, verify the scan tool Windscreen Wiper High Speed Switch parameter is INACTIVE.
   If not the specified value, refer to Windscreen Wiper/Washer Switch Circuit Test.
4. S82 Windscreen Wiper/Washer Switch in the LOW position, verify the scan tool Windscreen Wiper Switch parameter is LOW.
   If not the specified value, refer to Windscreen Wiper/Washer Switch Circuit Test.
5. S82 Windscreen Wiper/Washer Switch in the HIGH position, verify the scan tool Windscreen Wiper High Speed Switch parameter is ACTIVE.
   If not the specified value, refer to Windscreen Wiper/Washer Switch Circuit Test.
6. S82 Windscreen Wiper/Washer Switch in the INT position, cycling the delay adjustment switch from long delay to short delay, observe the scan tool Windscreen Wiper Switch parameter while cycling the delay adjustment switch from long delay to short delay. The parameter should cycle between Delay 1 through Delay 5 as each delay position is selected.
   If not the specified value, refer to Windscreen Wiper/Washer Switch Circuit Test.

Circuit/System Testing

Windscreen Wiper/Washer Switch Circuit Test

1. Vehicle OFF, Retained Accessory Power OFF, disconnect the X1 harness connector at the S82 Windscreen Wiper/Washer Switch.
2. Verify a test lamp illuminates between terminal 2 and B+.
   If the test lamp does not illuminate, test the low reference circuit for an open/high resistance. If the circuit tests normal, replace the K9 BCM.
3. Vehicle in Service Mode, test for 9-11 V between the signal circuit terminal 3 and ground.
   If less than the specified value, test the signal circuit for a short to ground or an open/high resistance. If the circuit tests normal, replace the K9 BCM.
   If greater than the specified value, test the signal circuit for a short to voltage. If the circuit tests normal, replace the K9 BCM.
4. Test for B+ between the signal circuit terminal 1 and ground.
   If less than the specified value, test the signal circuit for a short to ground or an open/high resistance. If the circuit tests normal, replace the K9 BCM.
5. Disconnect the X3 harness connector at the K9 BCM.
6. Test for less than 1 V between terminal 20 and ground.
   If greater than the specified value, test for a short to voltage.
7. Vehicle OFF, disconnect the harness connector at the S70R steering wheel control switch - right.
8. Vehicle in Service Mode, test for B+ between the voltage reference circuit terminal 1 and ground.
   If less than the specified value, test the voltage reference circuit for a short to ground or an open/high resistance. If the circuit tests normal, replace the K9 BCM.
9. If all circuits test normal, test or replace the S82 Windscreen Wiper/Washer Switch.

Repair Instructions

Perform the Diagnostic Repair Verification after completing the diagnostic procedure.

- Windscreen Wiper Motor Replacement
- Windscreen Wiper and Washer Switch Replacement
- Control Module References for BCM replacement, setup, and programming

&#169© Copyright Chevrolet. All rights reserved

Washer Malfunction

Diagnostic Instructions

- Perform the Diagnostic System Check - Vehicle prior to using this diagnostic procedure.
- Review Strategy Based Diagnosis for an overview of the diagnostic approach.
- Diagnostic Procedure Instructions provides an overview of each diagnostic category.

Diagnostic Fault Information

Circuit	Short to Ground	Open/High Resistance	Short to Voltage	Signal Performance
Windscreen Washer Switch Signal	2	1	1	--
Washer Fluid Level Switch Signal	4	3	3	--
Windscreen Washer Fluid Pump Control	1	1	2	--
Windscreen Washer Relay Control	B3873 02	1	2	--
Washer Fluid Level Switch Ground	--	3	--	-
Windscreen Washer Fluid Pump Ground	--	1	--	--

1. Front Washer Inoperative.

2. Front Washer Always ON.

3. Washer Fluid Level Indicator Inoperative.

4. Washer Fluid Level Indicator Always ON.

Circuit/System Description

The body control module (BCM) controls the windscreen washer fluid pump based on an input from the wiper/washer switch. The BCM monitors the washer switch through the windscreen washer switch signal circuit. When the wash switch is closed, ground is supplied to the windscreen washer switch signal circuit. When this is the case, the BCM will command the windscreen washer fluid pump and the low speed wipers on.

On some vehicles, warning information (wash fluid low) will be conveyed via the GMLAN to the controls and displays subsystem (responsible for display). This subsystem will provide visual feedback to the customer while in the RUN power mode.

Reference Information

Schematic Reference

Wiper/Washer Schematics

Connector End View Reference

Component Connector End Views

Description and Operation

Wiper/Washer System Description and Operation

Electrical Information Reference

- Circuit Testing
- Connector Repairs
- Testing for Intermittent Conditions and Poor Connections
- Wiring Repairs

Scan Tool Reference

Control Module References for scan tool information

Circuit/System Verification

1. Vehicle in Service Mode, observe the scan tool Windscreen Washer Switch parameter while pressing and releasing the S82 Windscreen Wiper/Washer Switch. The parameter should change between INACTIVE and ACTIVE.
   If the reading does not change between INACTIVE and ACTIVE, refer to Windscreen Washer Switch Circuit Test.
2. Command the Windscreen Washer Relay Command ON and OFF with a scan tool. The windscreen washers should turn ON and OFF when changing between the commanded states.
   If the windscreen washers do not turn ON and OFF, refer to Washer Pump Circut Test
3. Verify the washer fluid level is above the minimum level.
   If not above the minimum level, fill the reservoir and inspect for leaks. If the low washer fluid indicator is still ON, refer to Low Washer Fluid Indicator Test.

Circuit/System Testing

Note: You must perform the Circuit/System Verification before proceeding with Circuit/System Testing.

Windscreen Washer Switch Circuit Test

1. Vehicle OFF, disconnect the harness connector at the S82 Windscreen Wiper/Washer Switch.
2. Verify that a test lamp illuminates between low reference circuit terminal 2 and B+.
   If the test lamp does not illuminate, test the low reference circuit for an open/high resistance. If the circuit tests normal, replace the K9 BCM.
3. Vehicle in Service Mode, verify the scan tool Windscreen Washer Switch parameter is INACTIVE.
   If not the specified value, test the signal circuit terminal 5 for a short to ground. If the circuit tests normal, replace the K9 BCM.
4. Install a 3 A fused jumper wire between the signal circuit terminal 5 and ground. Verify the scan tool Windscreen Washer Switch parameter is ACTIVE.
   If not the specified value, test the signal circuit for a short to voltage or an open/high resistance. If the circuit tests normal, replace the K9 BCM.
5. If all circuits test normal, test or replace the S82 windscreen wiper/washer switch.

Washer Pump Circuit Test

1. Vehicle OFF, disconnect the X1 harness connector at the X50A under-bonnet fuse block.
2. Connect a test lamp between the control circut terminal 35 and ground.
3. Vehicle in Service Mode, command the Windscreen Washer Relay Command ON and OFF with a scan tool. The test lamp should turn ON and OFF when changing between the commanded states.
   If the test lamp is always ON, test the control circuit for a short to voltage. If the circuit tests normal, replace the K9 BCM.
   If the test lamp is always OFF, test the control circuit for a short to ground or open/high resistance. If the circuit tests normal, replace the K9 BCM.
4. Vehicle OFF, connect the X1 harness at the X50A under-bonnet fuse block and disconnect the harness connector at the G24 Windscreen Washer Pump.
5. Test for less than 5 Ω between the ground circuit terminal 2 and ground.
   If greater than the specified range, test the ground circuit for an open/high resistance.
6. Connect a test lamp between control circuit terminal 1 and ground.
7. Vehicle in Service Mode, command the Windscreen Washer Relay Command On and OFF with a scan tool. The test lamp should turn ON and OFF when changing between the commanded states.
   If the test lamp is always ON, test the control circuit for a short to voltage. If the circuit tests normal, replace the X50A underbonnet fuse block.
   If the test lamp is always OFF, test the control circuit for a short to ground or an open/high resistance. If the circuit tests normal, replace the X50A underbonnet fuse block.
8. If all circuits test normal, test or replace the G24 Windscreen Washer Pump.

Low Washer Fluid Indicator Malfunction

1. Vehicle OFF, disconnect the harness connector at the B118B windscreen washer fluid level sensor.
2. Test for less than 5 Ω between the ground terminal 2 and ground.
   If greater than the specified range, test the ground circuit for an open/high resistance.
3. Vehicle in Service Mode, verify the scan tool Washer Fluid Level Switch parameter is OFF.
   If not the specified value, test the signal circuit terminal 1 for a short to ground. If the circuit tests normal, replace the P16 instrument cluster.

4. Install a 3 A fused jumper wire between the signal circuit terminal 1 and ground. Verify the scan tool Washer Fluid Level Switch parameter is ON.
   If not the specified value, test the signal circuit for a short to voltage or an open/high resistance. If the circuit tests normal, replace the P16 instrument cluster.
5. If all circuits test normal, test or replace the B118B windscreen washer fluid level sensor.

Component Testing

Washer Switch Test

1. Vehicle OFF, disconnect the harness connector at the S82 Windscreen Wiper/Washer Switch.
2. Test for less than 5 Ω between the switch terminals 2 and 5 while activating the washer function.
   If not the specified value, replace the S82 Windscreen Wiper/Washer Switch.

Washer Pump Test

1. Vehicle OFF, disconnect the harness connector at the G24 Windscreen Washer Pump.
2. Install a 10A fused jumper wire between the control terminal 1 and 12V. Install a jumper wire between the ground terminal 2 and ground.
3. Verify the G24 Windscreen Washer Pump is activated.
   If the G24 Windscreen Washer Pump does not activate, replace the G24 Windscreen Washer Pump.

Relay Test

1. Vehicle OFF, Retained Accessory Power OFF, disconnect the harness connector X4 at the K9 Body Control Module.
2. Test for 120-160 Ω between the control circuit terminal 14 and ground.
   If less than the specified value, test the control circuit for a short to ground.
   If greater than the specified value, test the control circuit for an open/high resistance or a short to voltage.
3. If all circuits test normal, test or replace the K9 Body Control Module.

Low Washer Fluid Switch Test

1. Vehicle OFF, remove the B118B Windscreen Washer Fluid Level Switch.
2. B118B Windscreen Washer Fluid Level Switch open, test for infinite resistance between the signal circuit terminal 1 and the ground terminal 2.
   If not the specified value, replace the B118B Windscreen Washer Fluid Level Switch.
3. B118B Windscreen Washer Fluid Level Switch closed, test for less than 5 Ω between the signal circuit terminal 1 and the ground terminal 2.
   If not the specified range, replace the B118B Windshield Washer Fluid Level Switch.

Repair Instructions

Perform the Diagnostic Repair Verification after completing the diagnostic procedure.

- Fuse Block Replacement
- Relay Replacement : Within an Electrical Center → Attached to Wire Harness
- Windscreen Wiper and Washer Switch Replacement
- Windscreen Washer Pump Replacement
- Control Module References for BCM replacement, setup, and programming

&#169© Copyright Chevrolet. All rights reserved

Wiper Blade Element Check

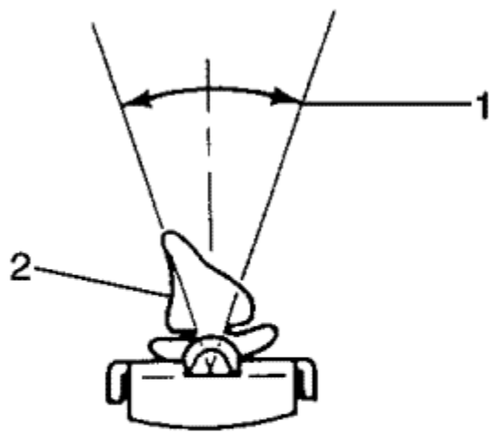

1. Remove the wiper blade from the wiper arm. Refer to Windscreen Wiper Blade Replacement : Passenger → Driver .
2. Look down the entire length of the blade element.
3. The rubber part of the element (2) that contacts the window must be on the centre line of the blade plus or minus 15 degrees (1).
4. Replace the blade element (2) if the element exceeds 15 degrees from the centre line of the blade, or if the element is cracked or torn. Refer to Windscreen Wiper Blade Replacement : Passenger → Driver
5. Install the wiper blade onto the windscreen wiper arm.

© Copyright Chevrolet. All rights reserved

Windscreen Wiper and Washer Switch Replacement

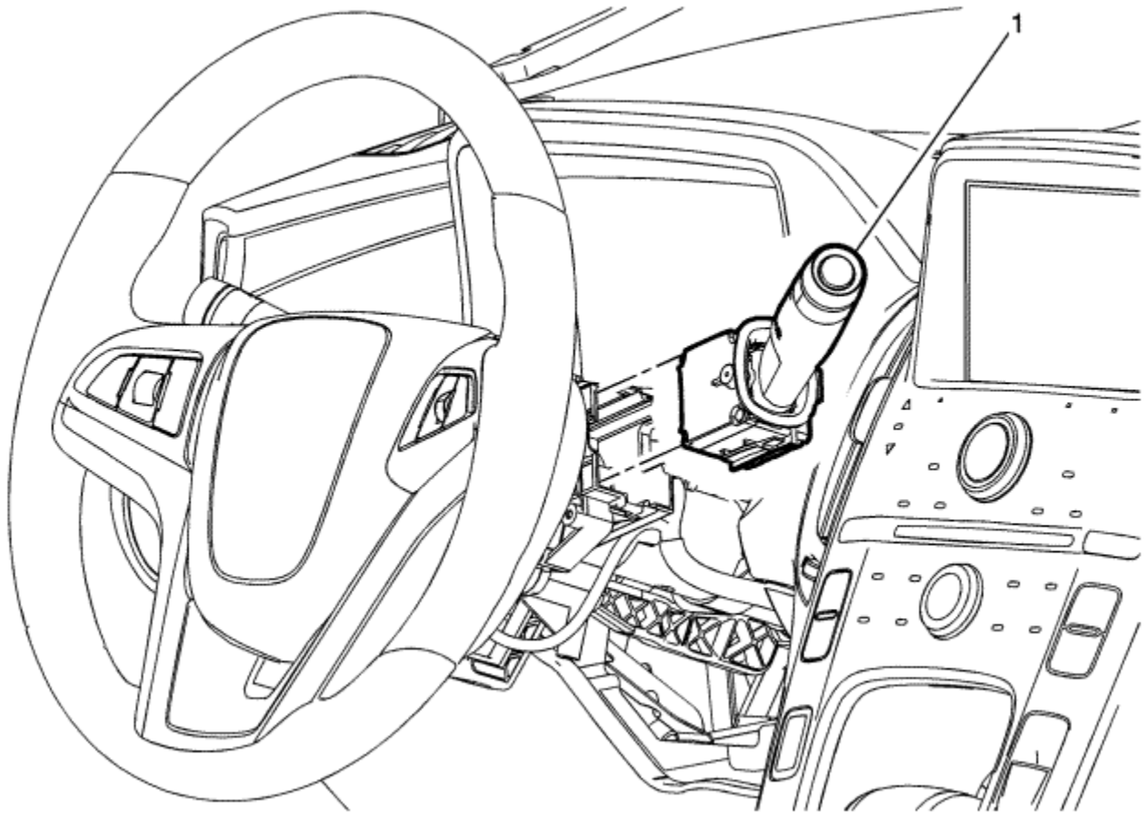

Callout	Component Name
Preliminary Procedure Remove the upper trim cover and the lower trim cover from the steering column. Refer to Steering Column Lower Trim Cover Replacement .	
	Windscreen Wiper and Washer Switch

1	**Procedure** 1. Disconnect any electrical connectors as necessary. 2. Release the plastic retaining tabs and remove the windscreen wiper and washer switch from the indicator switch bracket.

© Copyright Chevrolet. All rights reserved

Windscreen Washer Nozzle Replacement

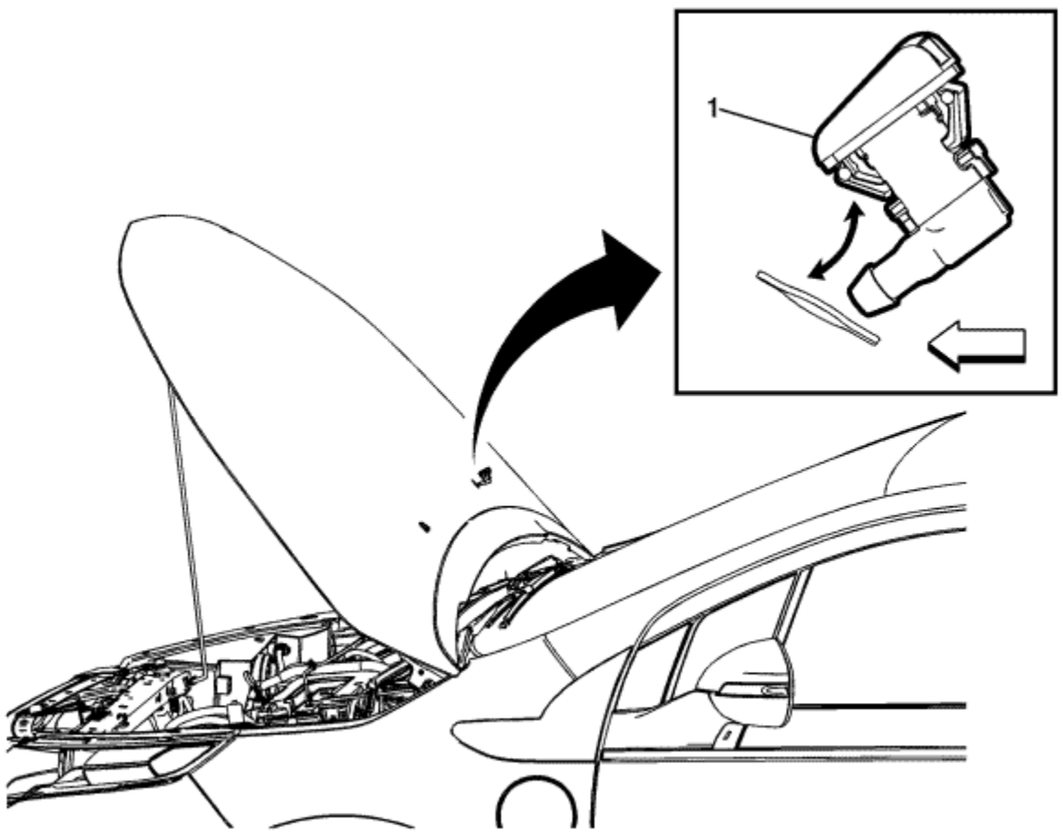

Callout	Component Name
Preliminary Procedures	

1. Open and suitably support the bonnet assembly.
2. Remove the bonnet insulator. Refer to Bonnet Insulator Replacement : Volt → Ampera .
3. Disconnect the windscreen washer pump hose from the washer nozzle being serviced.

1	Windscreen Washer Nozzle **Procedure** 1. Pinch the windscreen washer nozzle tabs and push the nozzle upward and outward from the bonnet assembly. 2. Remove the windscreen washer nozzle.

© Copyright Chevrolet. All rights reserved

Windscreen Washer Pump Hose Replacement

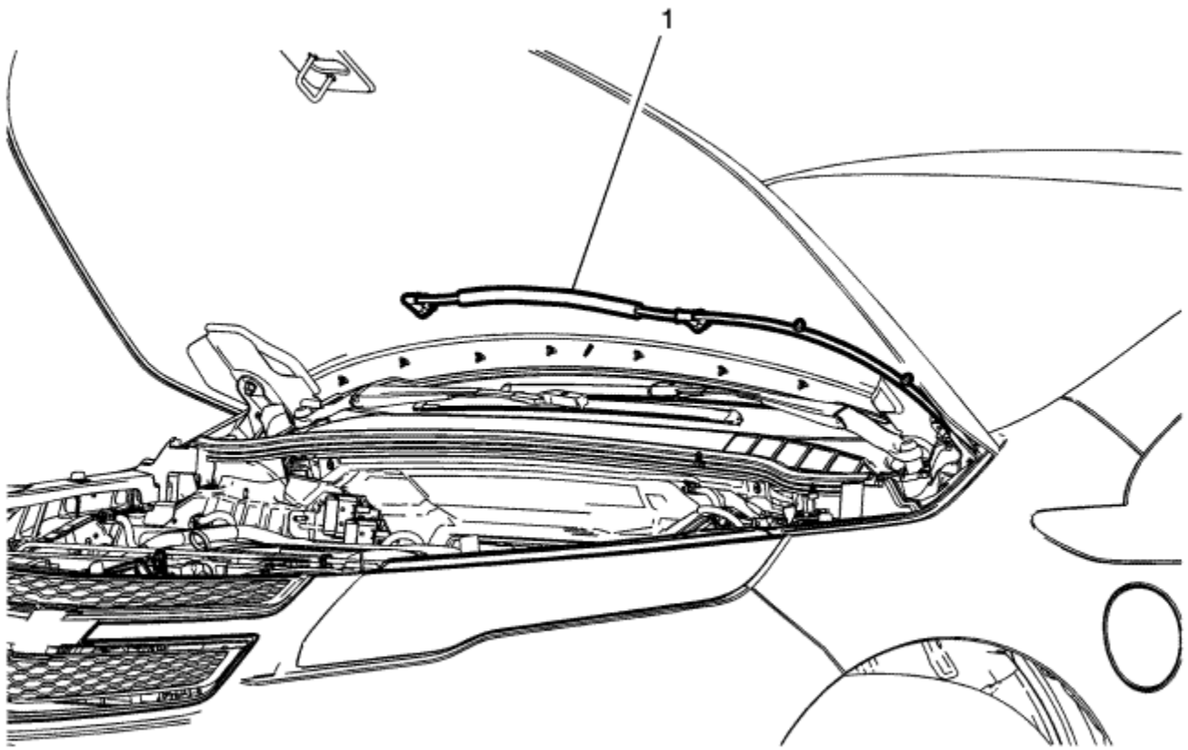

Callout	Component Name
Preliminary Procedures	

1. Remove the front wheelhouse front liner. Refer to Front Wheelhouse Front Liner Replacement .
2. Place a suitable clean container under the windscreen washer container before disconnecting the washer pump hose from the washer pump spout.
3. Disengage the washer hose from the front side of the windscreen washer solvent container.

4. Remove the bonnet insulator. Refer to Bonnet Insulator Replacement : Volt → Ampera .
5. Remove the left side front compartment side sight shield. Refer to Front Compartment Side Sight Shield Replacement : Volt → Ampera .

1	Windscreen Washer Pump Hose **Procedure** 1. Disconnect two washer hose retainers from the front wheelhouse panel inner front brace. 2. Disconnect the washer hose retainer from the bonnet hinge. 3. Disconnect the two washer hose retainers from the bonnet inner panel. 4. Disconnect the washer hose from both windscreen washer nozzles. 5. Carefully pull and remove the washer hose from the engine compartment.

© Copyright Chevrolet. All rights reserved

Windscreen Washer Solvent Container Filler Tube Replacement

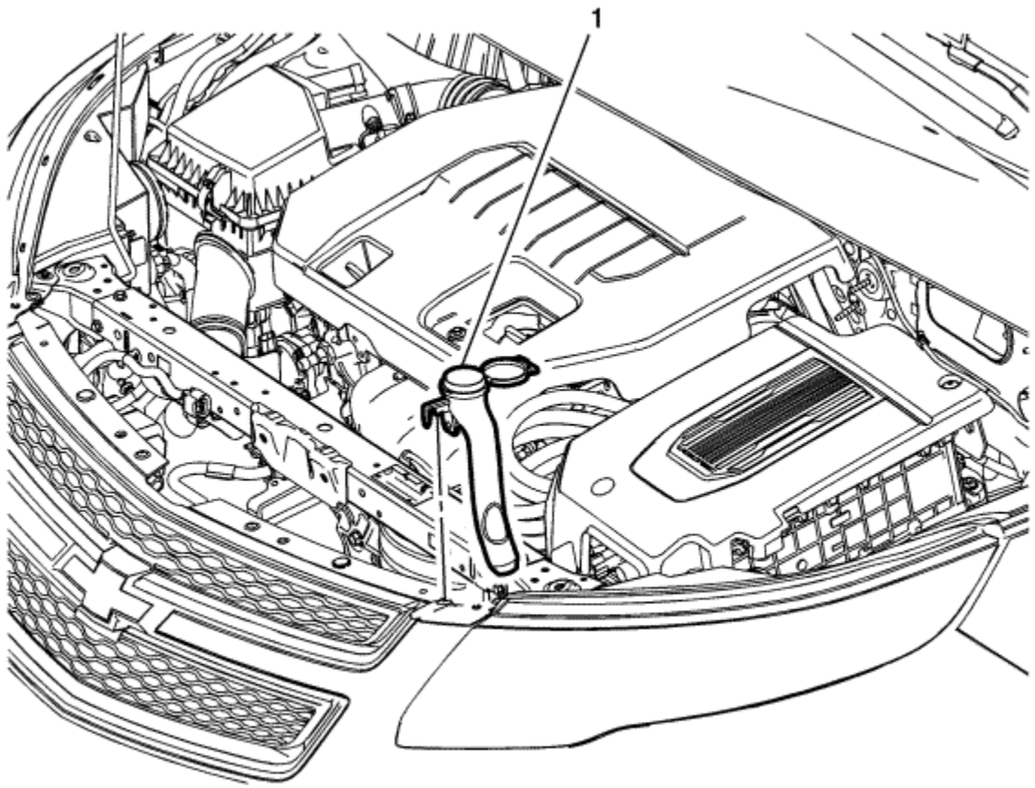

Callout	Component Name
Preliminary Procedure 1. Open and suitably support the bonnet assembly. 2. Remove the front compartment sight shield. Refer to Front Compartment Front Sight Shield Replacement : Volt → Ampera .	

	Windscreen Washer Solvent Container Filler Tube
1	**Procedure** Pull upward on the filler tube in order to disconnect the filler tube from the windscreen washer solvent container grommet.

© Copyright Chevrolet. All rights reserved

Windscreen Washer Solvent Container Grommet Replacement

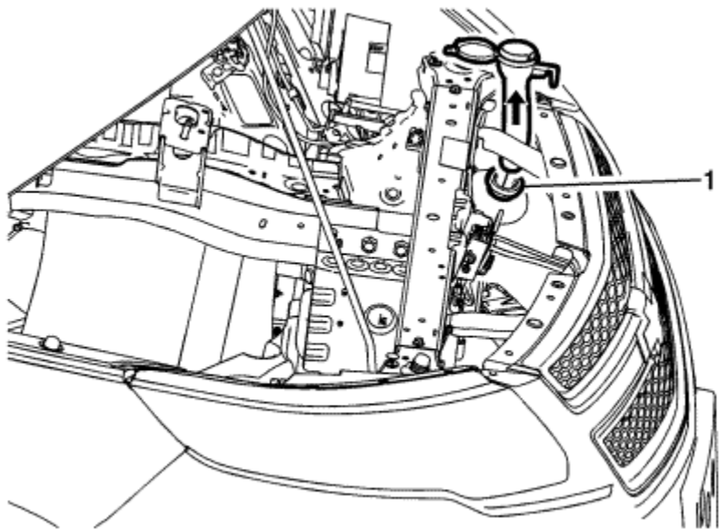

Callout	Component Name
Preliminary Procedures 1. Open and suitably support the bonnet. 2. Remove the front compartment front sight shield. Refer to Front Compartment Front Sight Shield Replacement : Volt → Ampera . 3. Remove the windscreen washer solvent container filler tube. Refer to Windscreen Washer Solvent Container Filler Tube Replacement .	
1	Windscreen Washer Solvent Container Grommet **Procedure** 1. Carefully squeeze the grommet while using a flat-bladed tool to pry upward under the edge of the grommet. 2. When installing a new grommet, use full strength windscreen washer fluid as a lubricant on the grommet. 3. Place the grommet to the windscreen washer solvent container. 4. Use the palm of the hand to seat the grommet into the windscreen washer solvent container.

© Copyright Chevrolet. All rights reserved

Windscreen Washer Solvent Container Replacement

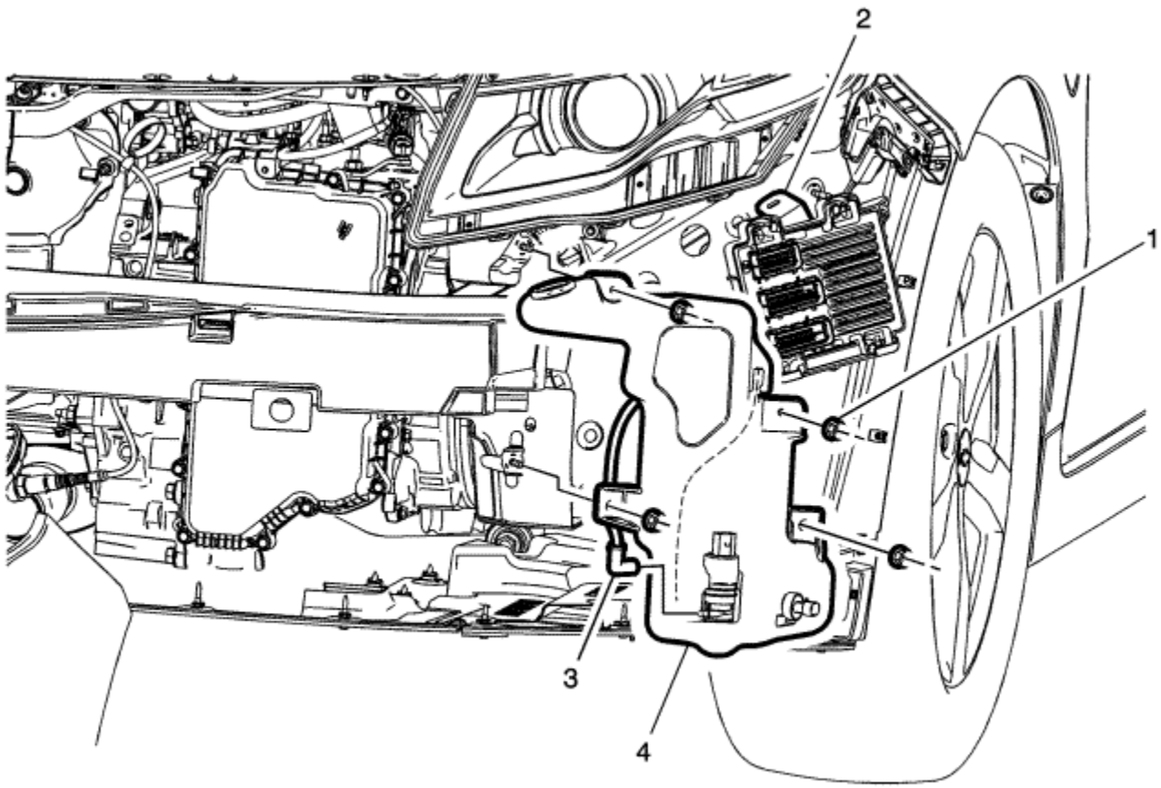

Callout	Component Name
Preliminary Procedures	

1. Remove the front bumper fascia. Refer to Front Bumper Fascia Removal and Installation : Volt → Ampera .
2. Remove the windscreen washer container filler tube. Refer to Windscreen Washer Solvent Container Filler Tube Replacement .
3. Disconnect the electrical connectors to the washer pump and level sensor.

1	Windscreen Washer Solvent Container Nut (Qty: 4) **Caution:** Refer to Fastener Caution in the Preface section. **Tighten** 9 N·m (80 lb in)
2	Electronic Control Module Bracket **Tip** Reposition the electronic control module (ECM) bracket in order to remove the windscreen washer solvent container from the mounting studs. Refer to Engine Control Module Bracket Replacement .
3	Windscreen Washer Pump Hose **Procedure** Disconnect the windscreen washer pump hose from the washer pump spout and disengage the washer hose from the side of the windscreen washer solvent container.
4	Windscreen Washer Solvent Container **Procedure** 1. Remove the container and drain into a suitable clean container. 2. Transfer the windscreen washer pump. 3. Transfer the level sensor. 4. Re-fill the washer container with clean washer solvent once the installation has been completed.

© Copyright Chevrolet. All rights reserved

Windscreen Washer Pump Replacement

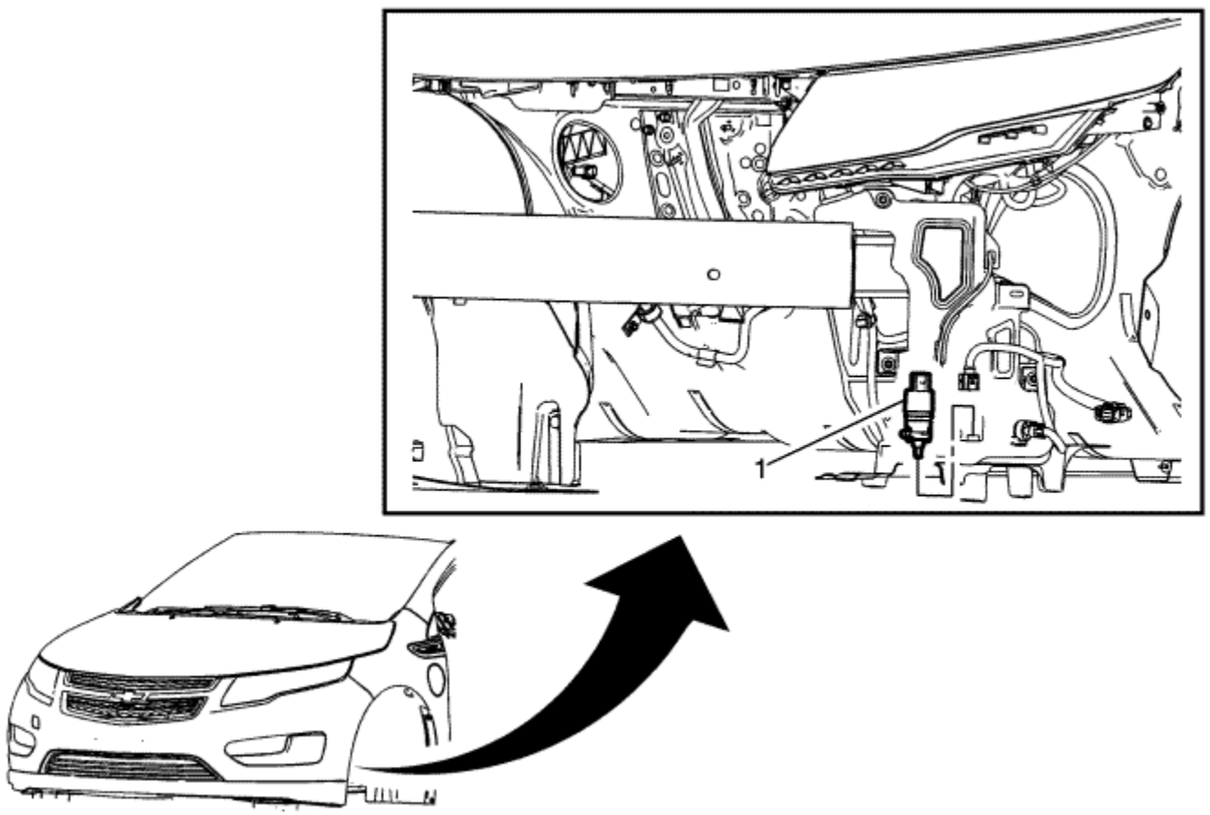

Callout	Component Name
Preliminary Procedures	
1. Remove the front bumper fascia. Refer to Front Bumper Fascia Removal and Installation : Volt → Ampera . 2. Place a clean suitable drain pan under the windscreen washer solvent container to contain any lost windscreen washer solvent.	

1	Windscreen Washer Pump **Procedure** 1. Disconnect the electrical connector for the windscreen washer pump. 2. Disconnect the windscreen washer pump hose. 3. Using two flat-bladed tools underneath the washer pump grommet, turn the flat-blades in opposite directions to disengage the washer pump from the washer pump grommet. 4. Remove the washer pump grommet and discard.

© Copyright Chevrolet. All rights reserved

Windscreen Washer Solvent Level Sensor Replacement

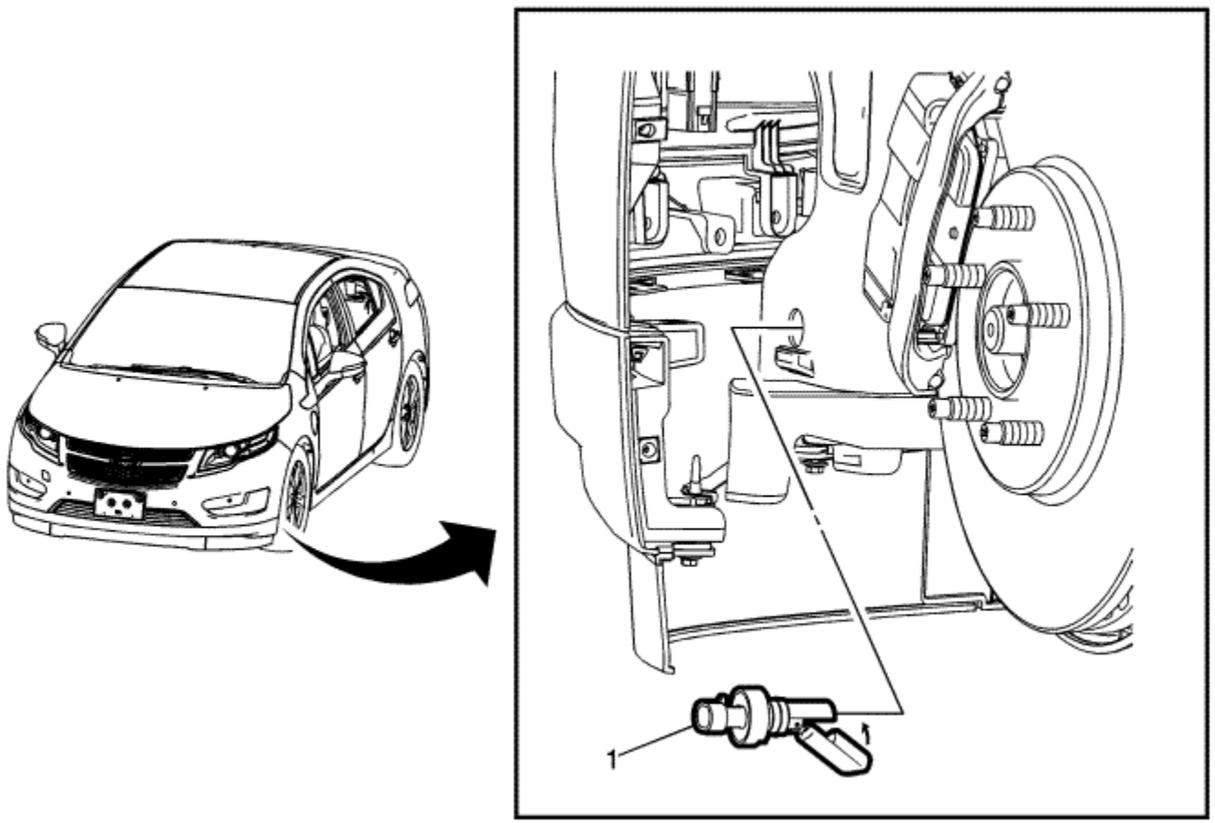

Callout	Component Name

Preliminary Procedures

1. Remove the left front wheelhouse front liner. Refer to Front Wheelhouse Front Liner Replacement .
2. Disconnect the electrical connector from the windscreen washer level sensor.
3. Place a clean suitable drain pan under the windscreen washer solvent container to secure the windscreen washer solvent when the level sensor and seal are removed.

1	Windscreen Washer Solvent Level Sensor **Procedure** 1. Using two flat-bladed tool, place the ends of the flat-blades under each side of the windscreen washer solvent level sensor seal. 2. Twisting in opposite directions, pry outward, the level sensor from the washer solvent container. 3. Remove and discard the windscreen washer level sensor grommet.

© Copyright Chevrolet. All rights reserved

Plenum Upper Panel Insulator Replacement

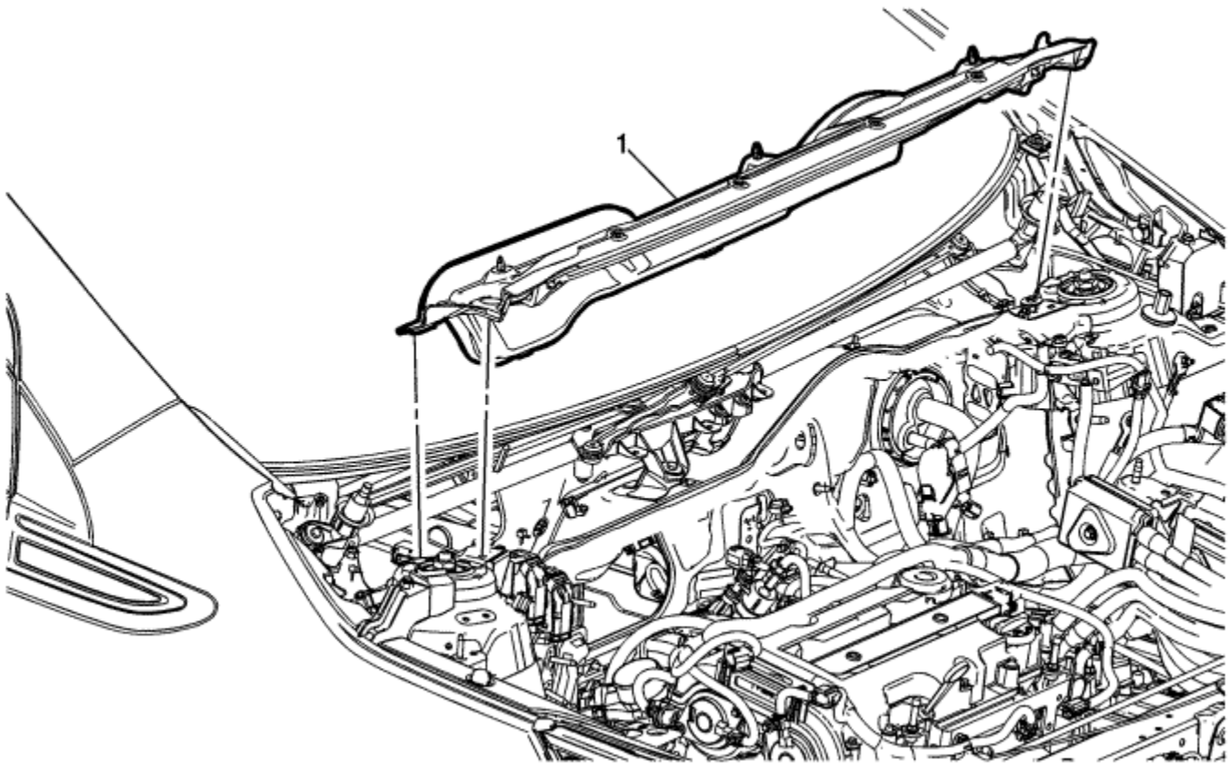

Callout	Component Name
Preliminary Procedure Remove the front suspension strut housing support. Refer to Front Suspension Strut Housing Brace Replacement .	
	Plenum Upper Panel Insulator Cover

1	**Procedure** Remove the plenum upper panel insulator cover from the plenum lower flange.

© Copyright Chevrolet. All rights reserved

Plenum Drain Tube Replacement

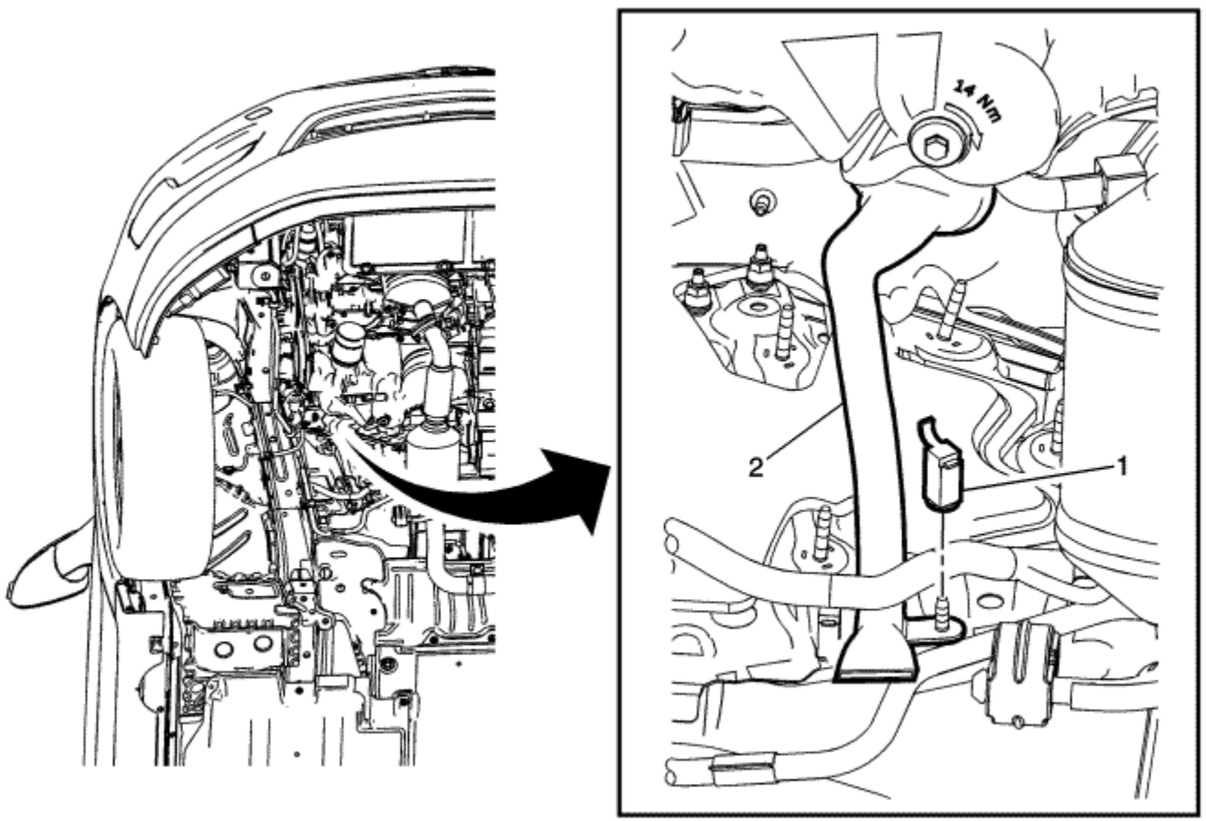

Callout	Component Name

Preliminary Procedure

1. Open and suitably support the bonnet assembly.
2. Remove the front suspension strut housing brace. Refer to Front Suspension Strut Housing Brace Replacement .
3. Raise and support the vehicle. Refer to Lifting and Jacking the Vehicle .

4. Remove the heater coolant heater. Refer to Heater Coolant Heater Replacement .

1	Plenum Drain Tube Nut **Caution:** Refer to Fastener Caution in the Preface section. **Procedure** Remove the nut from the master wiring electrical harness to the plenum drain tube tab and remove the tab from the auxiliary heater stud.
2	Plenum Drain Tube **Procedure** 1. Disconnect the plenum drain tube from under the dash outer panel insulator. 2. Remove the plenum drain tube from the bottom front side of the dash panel outer insulator. 3. Pull the plenum drain tube upward and outward from the engine compartment side.

© Copyright Chevrolet. All rights reserved

Air Inlet Grille Panel Replacement

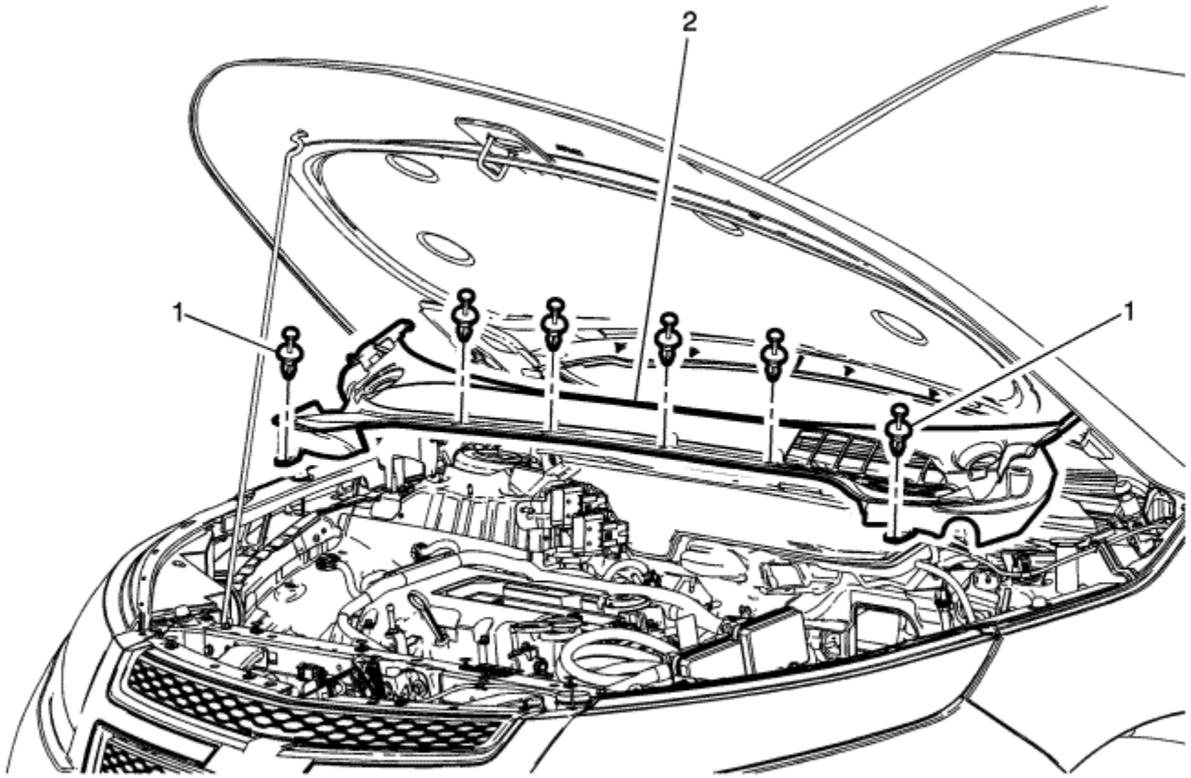

Callout	Component Name
Preliminary Procedures	

1. Remove the windscreen wiper arms. Refer to Windscreen Wiper Arm Replacement : Passenger → Driver .
2. Remove the air inlet grille panel extensions. Refer to Air Inlet Grille Panel Extension Replacement .
3. Remove the bonnet rear weatherstrip. Refer to Bonnet Rear Weatherstrip Replacement : Volt → Ampera .

1	Air Inlet Grille Panel Push-In Retainer (Qty: 6)
2	Air Inlet Grille Panel **Procedure** 1. Lift the forward edge grille panel high enough to clear the windscreen wiper transmission pivot shafts. 2. Use an appropriate plastic flat-bladed tool to release and remove the panel perpendicular from the lower retainers below the windscreen. 3. Remove the grille panel forward and out from the vehicle.

© Copyright Chevrolet. All rights reserved

Air Inlet Grille Panel Extension Replacement

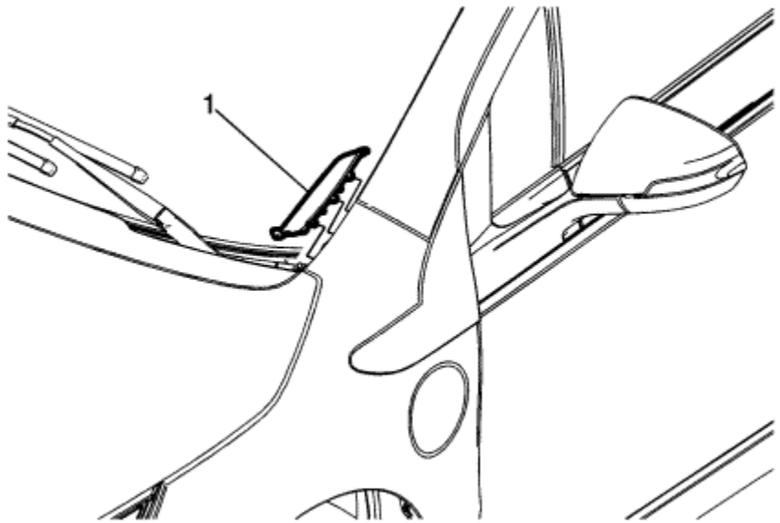

Callout	Component Name
1	Air Inlet Grille Panel Extension **Procedure** Grasp the extension and disengage the tabs from the rear edge of the bumper and rear edge of the air inlet panel.

© Copyright Chevrolet. All rights reserved

Windscreen Wiper Arm Replacement - Driver

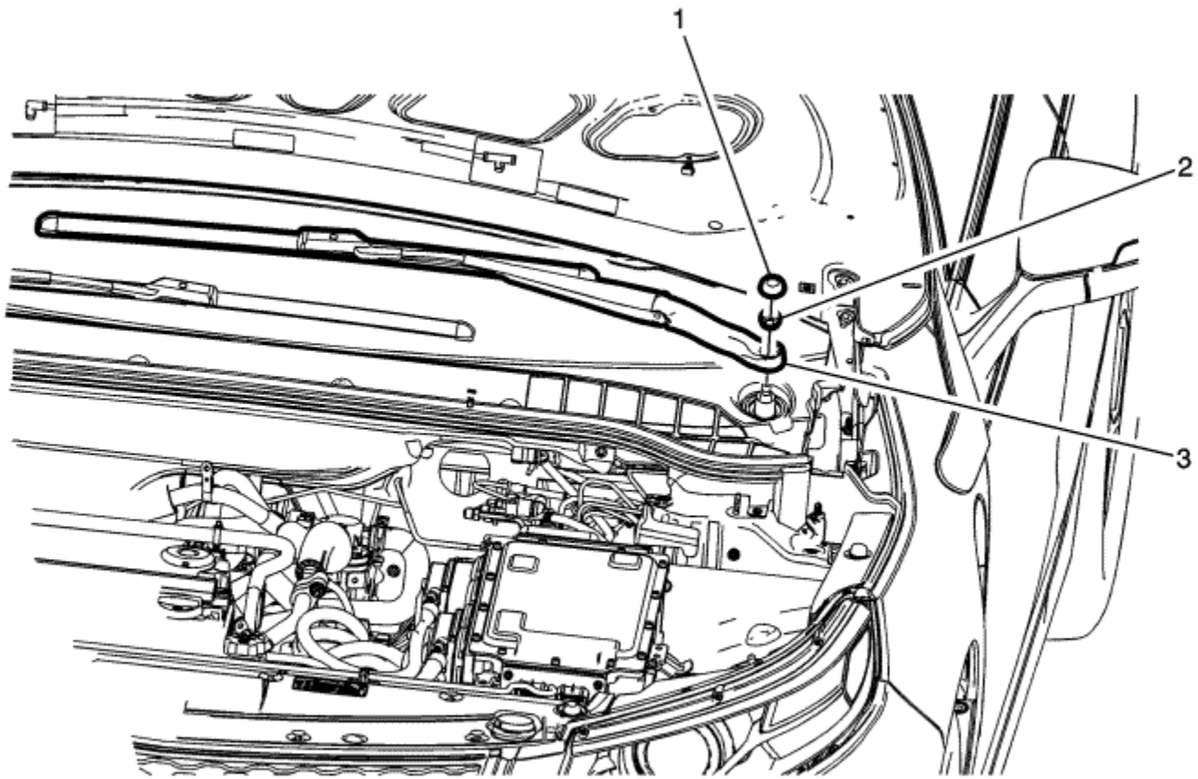

Callout	Component Name
Preliminary Procedure Open and suitably support the bonnet assembly.	
1	Windscreen Wiper Arm Finish Cap

	Tip Use a small flat-bladed tool in order to remove the cap from the wiper arm.
2	Windscreen Wiper Arm Nut **Caution:** Refer to Fastener Caution in the Preface section. **Tighten** 42 N·m (31 lb ft)
3	Windscreen Wiper Arm Assembly **Procedure** 1. When the wiper arm is removed from the pivot shaft, clean the pivot shaft knurls with a soft wire brush. 2. Grasp the rear of the wiper arm, place the arm over the pivot shaft. 3. Align the tip of the wiper blade to the small transparent circle in the lower centre windscreen blackout area. 4. Hold the wiper arm in that position. 5. Install the windscreen wiper arm nut. 6. Hold the windscreen wiper arm in position and torque the wiper arm nut as specified above. 7. Cycle the wiper arm with a spray of solvent, PARK the wiper arms and re-check the alignment of the wiper blade tip to the windscreen transparent circle.

© Copyright Chevrolet. All rights reserved

Windscreen Wiper Arm Replacement - Passenger

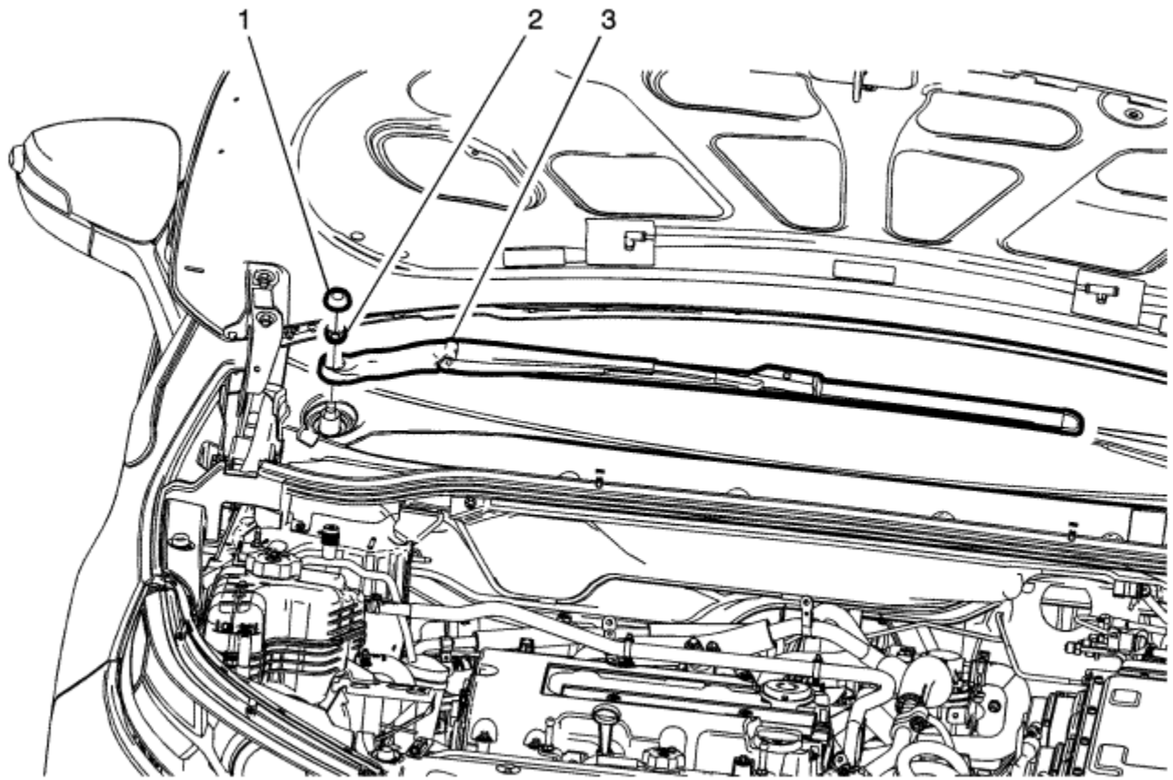

Callout	Component Name
Preliminary Procedure Open and suitably support the bonnet assembly.	
1	Windscreen Wiper Arm Finish Cap

	Tip Use a small flat-bladed tool in order to remove the cap from the wiper arm.
2	Windscreen Wiper Arm Nut **Caution:** Refer to Fastener Caution in the Preface section. **Tighten** 42 N·m (31 lb ft)
3	Windscreen Wiper Arm Assembly **Procedure** 1. When the wiper arm is removed from the pivot shaft, clean the pivot shaft knurls with a soft wire brush. 2. Grasp the rear of the wiper arm, place the arm over the pivot shaft. 3. Align the tip of the wiper blade to the small transparent circle in the lower centre windscreen blackout area. 4. Hold the wiper arm in that position. 5. Install the windscreen wiper arm nut. 6. Hold the windscreen wiper arm in position and torque the wiper arm nut as specified above. 7. Cycle the wiper arm with a spray of solvent, PARK the wiper arms and re-check the alignment of the wiper blade tip to the windscreen transparent circle.

© Copyright Chevrolet. All rights reserved

Windscreen Wiper Blade Replacement - Driver

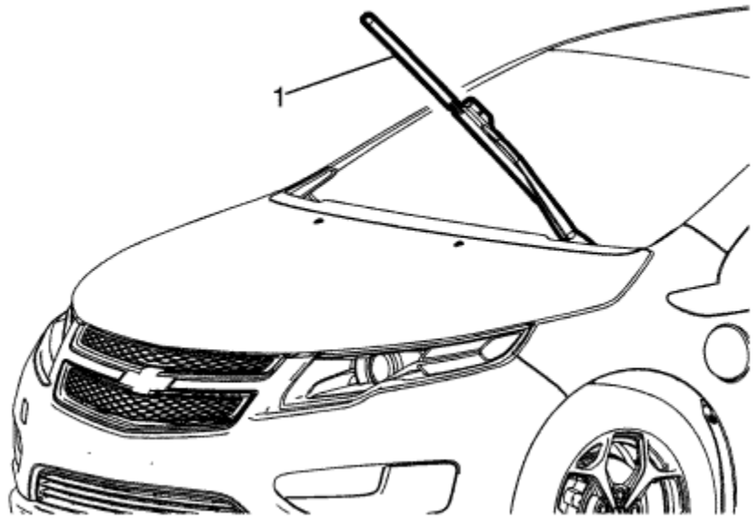

Callout	Component Name
1	Windscreen Wiper Blade **Procedure** 1. Lift the windscreen wiper arm from the windscreen. 2. Depress the small square tab on the topside of the wiper arm. 3. Rotate the blade downward and slide the wiper blade from the wiper arm.

© Copyright Chevrolet. All rights reserved

Windscreen Wiper Blade Replacement - Passenger

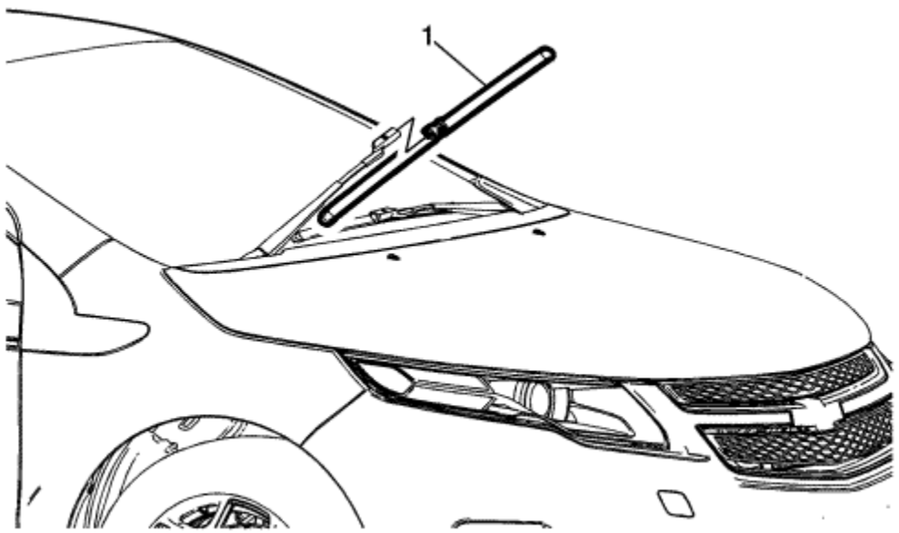

Callout	Component Name
1	Windshield Wiper Blade **Procedure** 1. Lift the windscreen wiper arm from the windscreen. 2. Depress the small square tab on the topside of the wiper arm. 3. Rotate the blade downward and slide the wiper blade from the wiper arm.

© Copyright Chevrolet. All rights reserved

Windscreen Wiper Motor Replacement

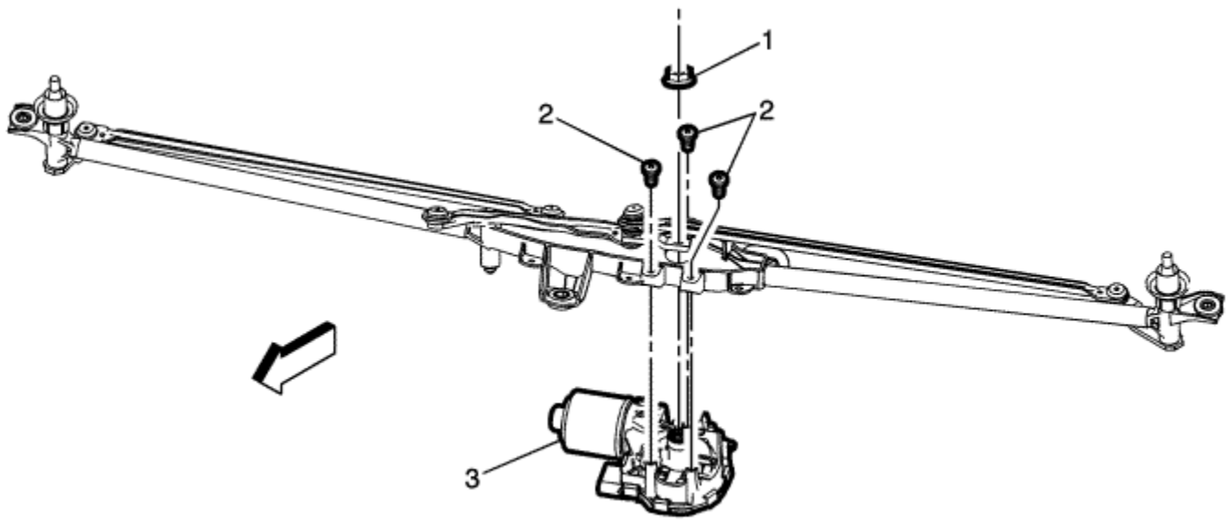

Callout	Component Name
Preliminary Procedure Remove the windscreen wiper transmission. Refer to Windscreen Wiper Motor Replacement .	
1	Crank Arm Nut **Procedure** Separate the windscreen wiper motor crank arm from the wiper motor pivot shaft.
2	Windscreen Wiper Motor Bolt (Qty: 3) **Caution:** Refer to Fastener Caution in the Preface section. **Tighten** 9 N·m (80 lb in)

3	Windscreen Wiper Motor

© Copyright Chevrolet. All rights reserved

Windscreen Wiper Motor Replacement

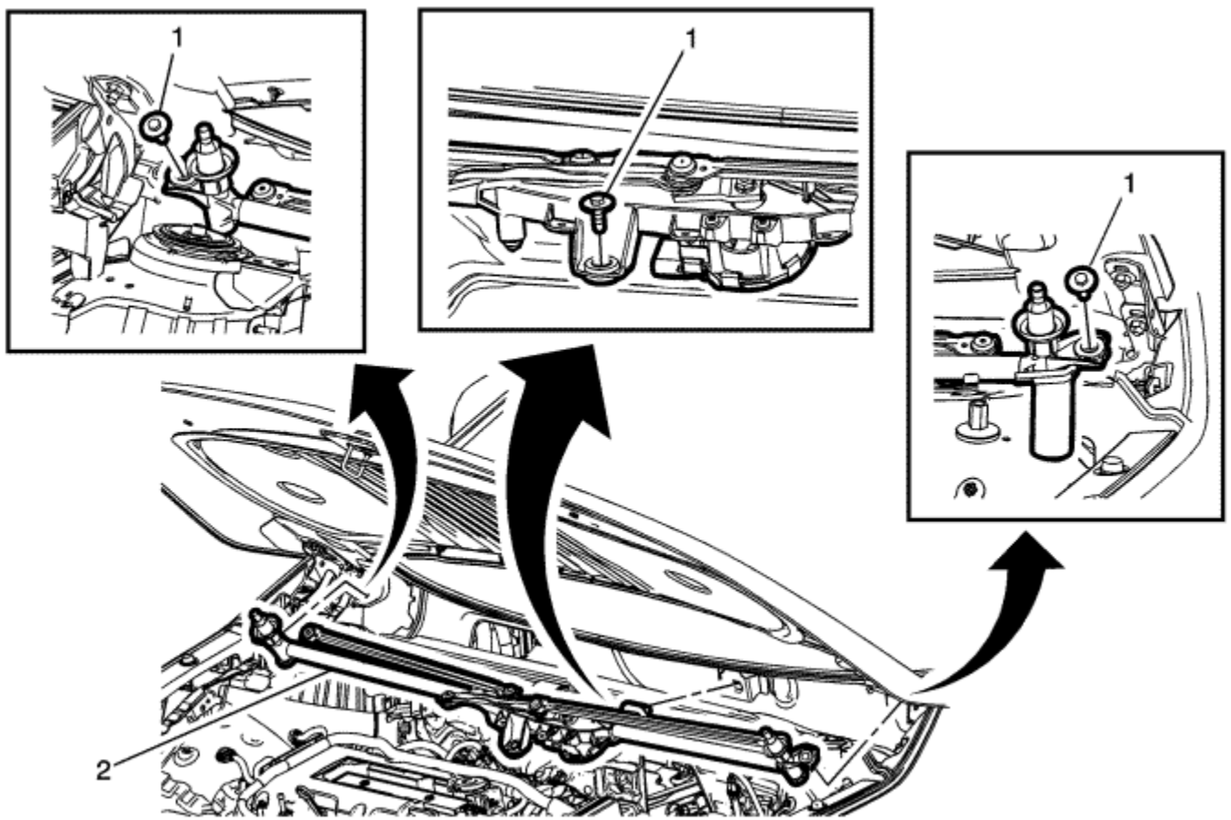

Callout	Component Name
Preliminary Procedures	
1. Open and suitably support the bonnet assembly. 2. Remove the air inlet grille panel. Refer to Air Inlet Grille Panel Replacement . 3. Remove the front suspension strut housing brace. Refer to Front Suspension Strut Housing Brace Replacement .	

1	Windscreen Wiper Module Bolt (Qty: 3) **Caution:** Refer to Fastener Caution in the Preface section. **Tighten** 9 N·m (80 lb in)
2	Windscreen Wiper Transmission Assembly **Procedure** 1. Lift the front edge of the assembly and pull slightly forward in order to disengage the centre support from the backside of the plenum. 2. Disconnect the electrical connection from the windscreen wiper motor. 3. Remove the transmission assembly from the plenum. 4. Remove the windscreen wiper motor. Refer to Windscreen Wiper Motor Replacement .

© Copyright Chevrolet. All rights reserved

Windscreen Glass Cleaning

Clean the windscreen with windscreen cleaner. Refer to the electronic parts catalog or use equivalent cleaner. The cleaner should not harm the paint finish or scratch the glass. The glass is clean when the water no longer beads, but sheets across the entire glass surface.

© Copyright Chevrolet. All rights reserved

Wiper Blade Element Cleaning

Lift each blade assembly off of the windscreen and clean the element with a cloth saturated with full strength washer solvent. Hold the blade in one hand and wipe the element with the saturated cloth until the black residue disappears. Then rinse the blade assembly elements with clean drinkable water.

© Copyright Chevrolet. All rights reserved

Wiper Chatter Repair

Some vehicles may exhibit a condition where the windscreen wipers chatter and/or wipe unevenly. Several items may contribute to this condition. To completely repair this condition, ALL of the items listed should be inspected and corrected as necessary.

1. Inspect the wiper blade element set. Refer to Wiper Blade Element Check
2. Clean the wiper blade elements. Refer to Wiper Blade Element Cleaning
3. Clean the windscreen. Refer to Windscreen Glass Cleaning

© Copyright Chevrolet. All rights reserved

Wiper/Washer System Description and Operation

Wiper/Washer System Components

The wiper/washer system consists of the following electrical components:

- Windscreen Washer Pump Relay
- Windscreen Washer Fluid Pump
- Windscreen Wiper Motor
- Window Wiper/Washer Switch
- Windscreen Wiper Motor Fuse
- Windscreen Washer Fluid Pump Fuse
- Body Control Module (BCM)
- Windscreen Washer Fluid Level Switch

Windscreen Wiper System

On Wiper System Smart equipped vehicles, the body control module (BCM) will command front wiper operations via local interconnect network (LIN) serial data communications instead of via ON/OFF and HIGH/LOW Wiper Motor Relay Drive Outputs. In front wiper systems using the Wiper System Smart - Single configuration, the Driver's side and Passenger's side Wiper Arm are connected by a mechanical linkage with a single integrated Front Wiper Motor/Controller operating them. The Front Wiper Motor/Controller contains the necessary electronics, motor, and position sensors to execute front wiper commands from the Body Control Module. These internal electronics are integrated into the cover of the wiper motor gear housing and are not considered a serviceable item. The Front Wiper Motor/Controller wipes the front windscreen by controlling the up and down wiper arm movement by the use of a reversing motor and an internal position sensor. The sensor keeps track of the gear wheel position and when the Controller determines that the wiper arms are at a position to reverse direction, it reverses the motor supply voltage by use of its internal motor control circuitry. The interface between the BCM and the Front Wiper Motor/Controller utilises a Master/Slave configuration using a LIN serial data system for communication. The BCM is designated as the master, and the Front Wiper Motor/Controller is configured as the slave. As the System Master, the BCM uses the LIN communication bus to command Front Wiper operation, and communicate vehicle information to the Wiper Motor controller. The Front Wiper Motor/Controller provides system status and diagnostic information to the BCM for diagnostic reporting and operational purposes. The Body Control Module (BCM) also provides a hardwired redundant output that switches Battery power to the Wiper Motor upon activation of its low assertion High Speed Wiper Switch input. The BCM will do this, even if the module has lost all microprocessor control. The Front Wiper Motor/Controller gives priority to its LIN input over this Redundant Control Input, however, in the event that LIN communications are lost between the BCM and the Front Wiper Motor/Controller this redundant signal is used to command the required fail-soft wiper actions including Power Mode. While under Redundant Input control the Front Wiper Motor/Controller shall provide Continuous Low Speed Wiper operation when the input is Active, and will park the Wipers and go to Low Power Mode when the Redundant Input is Inactive.

While the Front Wiper Switch is either held in the MIST position (momentary contact switch) or is in its LOW position (latching switch), the BCM provides continuous Low Speed Wiper operation by commanding uninterrupted Low Speed Wiper operation by setting the transmitted LIN signal to Low Speed Wipe.

The BCM shall command the Wiper System Smart to perform Intermittent Wipes as follows:

1. Perform one immediate wipe by issuing a LIN signal set to Low Wipes. The Front Wiper Motor/Controller shall initiate Low Speed Wiper Operation and send a LIN signal back set to Low Wiping.
2. Upon the wipers leaving their PARKED position, the Front Wiper Motor/Controller shall send a LIN signal indicating the wipers are no longer in park.
3. Upon receipt of the Wiper out of Park LIN signal, the BCM shall transition the Front Wiper Command LIN signal to Park. While the wiper system smart is in the process of moving the wipers to their parked position, it shall set the value of its Wiper Front Status LIN signal to Parking.
4. The current wipe cycle will be completed and the wipers parked. Upon parking the wipers, the wiper system smart sends the Wiper Front Status LIN signal set to Parked.
5. Upon the transition of the LIN signal from Parking to Parked, the BCM pauses the Wipers in their Park Position for the time duration associated with the current intermittent delay interval switch setting and repeats the process

As called out above, the wipe delay interval is a function of the INTERMITTENT Delay Interval Switch setting. When enabled, the Intermittent with Speed feature affects each of the 5 normal Intermittent Delay Intervals as a function of vehicle Speed. The Delay Intervals shall be biased to a shorter delay period with faster vehicle speeds and to a longer delay period with a slower vehicle speed.

Windscreen Washer System

The BCM controls the windscreen wash operation and windscreen wash activated wiper operation. When the BCM detects the activation of the momentary windscreen wash control switch, it activates its washer pump relay drive output which supplies battery power to the coil of the washer pump relay. This energises the relay, which switches battery power to the pump motor. The BCM will also activate continuous low speed windscreen wipes as described above. Upon deactivation of the windscreen wash control switch, the wiper control module (BCM) shall deactivate the wash motor and will also park the wiper motor as described above unless the drip wipe feature is enabled. On some vehicles the drip wipe feature will be enabled and cause the system to provide additional wiping of the windscreen after the switch has been released and fluid is no longer being applied. The front wash feature may attempt to detect a stuck switch. When enabled, activation of the wash feature shall be limited to 10 seconds.

On vehicles with the Rear Wash feature a single reversing wash motor may be utilised for both the front and rear wash operation. In this system the wash motor is operated in one direction to spray fluid on the front windscreen and then operated in the reverse direction to spray fluid on the rear window. The BCM Controls the reversing wash motor through two High Side Drive outputs. One controls the Front Wiper Motor Relay and one controls the Rear Wiper Relay.

&#169© Copyright Chevrolet. All rights reserved

Fastener Tightening Specifications

Application	Specification	
	Metric	English
Brake Control Brake Pedal Position Sensor Bolt	9 N·m	80 lb in
Brake Pipe Fitting	23 N·m	17 lb ft
Brake Pipe Fitting - Secondary	19 N·m	14 lb ft
Brake Pressure Modulator Valve (BPMV) Bolt	8 N·m	71 lb in
BPMV Bracket Bolt	22 N·m	16 lb ft
BPMV Bracket Nut	22 N·m	16 lb ft
Electronic Brake Control Module (EBCM) Bolt	3 N·m	27 lb in
Electronic Brake Control Position Sensor Bolt	9 N·m	80 lb in
Front Wheel Speed Sensor Bolt	10 N·m	89 lb in
Rear Wheel Speed Sensor Bolt	9 N·m	80 lb in
Yaw Sensor Nut	9 N·m	80 lb in

© Copyright Chevrolet. All rights reserved

Antilock Brake System Schematics

Figure 1: Power, Ground, Data Communication and Brake Pedal Control
Figure 2: Wheel Speed Signals
Figure 3: Vehicle Stability

© Copyright Chevrolet. All rights reserved

DTC C0035-C0050, C1207-C1210, C1221-C1228, or C1232-C1235

Diagnostic Instructions

- Perform the Diagnostic System Check - Vehicle prior to using this diagnostic procedure.
- Review Strategy Based Diagnosis for an overview of the diagnostic approach.
  Diagnostic Procedure Instructions provides an overview of each diagnostic category.

DTC Descriptors

DTC C0035 04: Left Front Wheel Speed Sensor Circuit Open

DTC C1232 00: Left Front Wheel Speed Sensor Circuit Low Input

DTC C0035 26: Left Front Wheel Speed Sensor Circuit Low Frequency

DTC C1221 00: Left Front Wheel Speed Sensor Circuit Malfunction

DTC C0035 27: Left Front Wheel Speed Sensor Circuit High Frequency

DTC C1225 00: Left Front Wheel Speed Sensor Circuit Performance

DTC C0035 0E: Left Front Wheel Speed Sensor Circuit Low Resistance

DTC C1207 00: Left Front Wheel Speed Sensor Circuit High Input

DTC C0035 1F: Left Front Wheel Speed Sensor Circuit Erratic

DTC C1221 00: Left Front Wheel Speed Sensor Circuit Malfunction

DTC C0040 04: Right Front Wheel Speed Sensor Circuit Open

DTC C1233 00: Right Front Wheel Speed Sensor Circuit Low Input

DTC C0040 0E: Right Front Wheel Speed Sensor Circuit Low Resistance

DTC C1208 00: Right Front Wheel Speed Sensor Circuit High Input

DTC C0040 1F: Right Front Wheel Speed Sensor Circuit Erratic

DTC C1222 00: Right Front Wheel Speed Sensor Circuit Malfunction

DTC C0040 26: Right Front Wheel Speed Sensor Circuit Low Frequency

DTC C1222 00: Right Front Wheel Speed Sensor Circuit Malfunction

DTC C0040 27: Right Front Wheel Speed Sensor Circuit High Frequency

DTC C1226 00: Right Front Wheel Speed Sensor Circuit Performance

DTC C0045 04: Left Rear Wheel Speed Sensor Circuit Open

DTC C1234 00: Left Rear Wheel Speed Sensor Circuit Low Input

DTC C0045 0E: Left Rear Wheel Speed Sensor Circuit Low Resistance

DTC C1209 00: Left Rear Wheel Speed Sensor Circuit High Input

DTC C0045 1F: Left Rear Wheel Speed Sensor Circuit Erratic

DTC C1223 00: Left Rear Wheel Speed Sensor Circuit Malfunction

DTC C0045 26: Left Rear Wheel Speed Sensor Circuit Low Frequency

DTC C1223 00: Left Rear Wheel Speed Sensor Circuit Malfunction

DTC C0045 27: Left Rear Wheel Speed Sensor Circuit High Frequency

DTC C1227 00: Left Rear Wheel Speed Sensor Circuit Performance

DTC C0050 04: Right Rear Wheel Speed Sensor Circuit Open

DTC C1235 00: Right Rear Wheel Speed Sensor Circuit Low Input

DTC C0050 0E: Right Rear Wheel Speed Sensor Circuit Low Resistance

DTC C1210 00: Right Rear Wheel Speed Sensor Circuit High Input

DTC C0050 1F: Right Rear Wheel Speed Sensor Circuit Erratic

DTC C1224 00: Right Rear Wheel Speed Sensor Circuit Malfunction

DTC C0050 26: Right Rear Wheel Speed Sensor Circuit Low Frequency

DTC C1224 00: Right Rear Wheel Speed Sensor Circuit Malfunction

DTC C0050 27: Right Rear Wheel Speed Sensor Circuit High Frequency

DTC C1228 00: Right Rear Wheel Speed Sensor Circuit Performance

Diagnostic Fault Information

Circuit	Short to Ground	Open/High Resistance	Short to Voltage	Signal Performance
Left Front Wheel Speed Sensor Ignition	C0035 04, C1232 00	C0035 04, C1232 00	-	C0035 1F C1221 00, C0035 26 C1221 00, C0035 27 C1225 00
Left Front Wheel Speed Sensor Signal	C0035 04, C1232 00	C0035 04, C1232 00	C0035 0E, C1207 00	C0035 1F C1221 00, C0035 26 C1221 00, C0035 27 C1225 00
Right Front Wheel Speed Sensor Ignition	C0040 04, C1233 00	C0040 04, C1233 00	-	C0040 1F C1222 00, C0040 26 C1222 00, C0040 27 C1226 00
Right Front Wheel Speed Sensor Signal	C0040 04, C1233 00	C0040 04, C1233 00	C0040 0E, C1208 00	C0040 1F C1222 00, C0040 26 C1222 00, C0040 27 C1226 00
Left Rear Wheel Speed Sensor Ignition	C0045 04, C1209 00	C0045 04, C1234 00	-	C0045 1F C1223 00, C0045 26 C1223 00, C0045 27 C1227 00
Left Rear Wheel Speed Sensor Signal	C0045 04, C1234 00	C0045 04, C1234 00	C0045 0E, C1209 00	C0045 1F C1223 00, C0045 26 C1223 00, C0045 27 C1227 00
Right Rear Wheel Speed Sensor Ignition	C0050 04, C1235 00	C0050 04, C1235 00	-	C0050 1F C1224 00, C0050 26 C1224 00, C0050 27 C1228 00
Right Rear Wheel Speed Sensor Signal	C0050 04, C1235 00	C0050 04, C1235 00	C0050 0E, C1210 00	C0050 1F C1224 00, C0050 26 C1224 00, C0050 27 C1228 00

Component	Condition	DTC Symptom Bytes
Wheel Speed Sensor	• Physical damage • Debris on the wheel speed sensor or the tone ring • Loose or worn wheel bearing • Loose or improperly mounted sensor • Air gap between the wheel speed sensor and the tone ring too large • Water intrusion in the wiring harness	26, 27, 1F

Circuit/System Description

The wheel speed sensor receives ignition voltage from the electronic brake control module and provides a DC square wave signal back to the module. As the wheel spins, the

electronic brake control module uses the frequency of the square wave signal to calculate the wheel speed.

Conditions for Running the DTC

- Vehicle On or Vehicle in Service Mode
- Ignition voltage is greater than 10 V.

Conditions for Setting the DTC

C0035 04 - C0050 04 or C1232 00 - C1235 00

- An open or a high resistance is detected on a wheel speed sensor ignition circuit.
- A short to ground or an open/high resistance is detected on a wheel speed sensor signal circuit.

C0035 0E - C0050 0E or C1207 00 - C1210 00

- A short to ground is detected on a wheel speed sensor ignition circuit.
- A short to voltage is detected on a wheel speed sensor signal circuit.

C0035 26 - C0050 26, C0035 27 - C0050 27, C0035 1F - C0050 1F, C1221 00 - C1224 00, or C1225 00 - C1228 00

- Incorrectly mounted wheel speed sensor
- Water intrusion in the wiring harness
- Debris on the wheel speed sensor or the tone ring
- Missing tooth or teeth on the wheel speed sensor tone ring
- The tone ring may be demagnetised
- Air gap between the wheel speed sensor and the tone ring too large
- Electrical magnetic interference with the wheel speed sensor harness

Actions Taken when the DTC Sets

- The ABS indicator turns ON.
- The traction control/stability control indicator turns ON.
- The Service Brake Assist and Service StabiliTrak messages are displayed on the driver information centre.
- The electronic brake control module disables the antilock brake system, he traction control system and the electronic stability program for the duration of the drive cycle.

Conditions for Clearing the DTC

- The condition for setting the DTC is no longer present.
- The history DTC will clear after 40 consecutive fault-free drive cycles have occurred.

Diagnostic Aids

- Do not use a magnet to clean the tone ring.
- Inspect the wheel hub bearing tone ring for rust or corrosion.
- If two or more wheel speed sensors are inoperative, diagnose each wheel speed sensor individually.
- If the customer comments that the ABS indicator is ON only during moist environmental conditions (rain, snow, vehicle wash, etc.), inspect the wheel speed sensor wiring for signs of water intrusion.

Reference Information

Schematic Reference

Antilock Brake System Schematics

Connector End View Reference

Component Connector End Views

Description and Operation

ABS Description and Operation

Electrical Information Reference

- Circuit Testing
- Connector Repairs
- Testing for Intermittent Conditions and Poor Connections
- Wiring Repairs

Scan Tool Reference

Control Module References for scan tool information

Circuit/System Verification

1. Test drive the vehicle in a straight line at a speed greater than 20 km/h (13 mph).

2. Verify all scan tool Wheel Speed Sensor parameters are within 1.6 km/h (1 mph) of each other.
   If any parameter is not within 1.6 km/h (1 mph) of each other
   Refer to Circuit/System Testing.
   If each parameter is within 1.6 km/h (1 mph) of each other
3. All OK.

Circuit/System Testing

Note: If any of the symptom codes 26, 27, or 1F are set, refer to the Diagnostic Fault Information table for possible mechanical faults or conditions.

1. Vehicle OFF, disconnect the harness connector at the appropriate B5 wheel speed sensor, vehicle in service mode.
2. Test for greater than 11 V between the ignition circuit terminal 1 and ground.
   If 11 V or less
   2.1. Vehicle OFF, disconnect the harness connector at the K17 electronic brake control module.
   2.2. Test for infinite resistance between the ignition circuit and ground.
   If less than infinite resistance, repair the short to ground on the circuit.
   If infinite resistance
   2.3. Test for less than 2 Ω in the ignition circuit end to end.
   If 2 Ω or greater, repair the open/high resistance in the circuit.
   If less than 2 Ω, replace the K17 electronic brake control module.
   If greater than 11 V
3. Install a 3 A fused jumper wire at the ignition circuit terminal 1, vehicle in service mode.
4. Verify the scan tool Wheel Speed Sensor parameter changes while rapidly tapping the fused jumper wire to the signal circuit terminal 2.
   If the parameter does not change
   4.1. Vehicle OFF, disconnect the harness connector at the K17 electronic brake control module, vehicle in service mode.
   4.2. Test for less than 1 V between the signal circuit and ground.
   If 1 V or greater, repair the short to voltage on the circuit.
   If less than 1 V
   4.3. Vehicle OFF.
   4.4. Test for infinite resistance between the signal circuit and ground.
   If less than infinite resistance, repair the short to ground on the circuit.
   If infinite resistance
   4.5. Test for less than 2 Ω in the signal circuit end to end.
   If 2 Ω or greater, repair the open/high resistance in the circuit.
   If less than 2 Ω, replace the K17 electronic brake control module.
   If the parameter changes
5. Replace the B5 wheel speed sensor.

Repair Instructions

Perform the Diagnostic Repair Verification after completing the repair.

- Front Wheel Speed Sensor Replacement
- Rear Wheel Speed Sensor Replacement
- Control Module References for electronic brake control module replacement, programming and setup

&#169© Copyright Chevrolet. All rights reserved

DTC C005A

Diagnostic Instructions

- Perform the Diagnostic System Check - Vehicle prior to using this diagnostic procedure.
- Review Strategy Based Diagnosis for an overview of the diagnostic approach.
- Diagnostic Procedure Instructions provides an overview of each diagnostic category.

DTC Descriptor

DTC C005A 00: Simultaneous Malfunction of Both Wheel Speed Sensors on One Axle Malfunction

Circuit/System Description

The wheel speeds are detected by active wheel speed sensors and encoder rings. The encoder ring consists of permanent magnets. Each wheel speed sensor receives ignition voltage from the electronic brake control module and provides an alternating current square wave signal to the electronic brake control module. As the wheel spins, the module uses the frequency of the square wave signal to calculate the wheel speed.

Conditions for Running the DTC

- Vehicle in Service Mode or Vehicle ON
- Ignition voltage is greater than 10 V.
- Two wheel speeds are greater than 5 km/h (3 MPH).

Conditions for Setting the DTC

Simultaneous dropout of both wheel speed sensors on the same axle.

Actions Taken when the DTC Sets

- The ABS indicator turns ON.
- The red brake indicator turns ON.

- The traction control/stability control indicator turns ON.
- The Service Brake Assist and Service StabiliTrak messages are displayed on the driver information centre.
- The electronic brake control module disables the antilock brake system, the dynamic rear proportioning, the traction control system and the electronic stability program for the duration of the drive cycle.

Conditions for Clearing the DTC

- The condition for setting the DTC is no longer present.
- The history DTC will clear after 40 consecutive fault-free drive cycles have occurred.

Reference Information

Schematic Reference

Antilock Brake System Schematics

Connector End View Reference

Component Connector End Views

Description and Operation

ABS Description and Operation

Electrical Information Reference

- Circuit Testing
- Connector Repairs
- Testing for Intermittent Conditions and Poor Connections
- Wiring Repairs

Scan Tool Reference

Control Module References for scan tool information

Circuit/System Verification

1. Vehicle in Service Mode.
2. Verify that DTC C005A is not set.

If the DTC is set

Refer to DTC C0035-C0050, C1207-C1210, C1221-C1228, or C1232-C1235 .

If the DTC is not set

3. All OK.

&#169© Copyright Chevrolet. All rights reserved

DTC C0110, C12E0, C12E8, or C12E9

Diagnostic Instructions

- Perform the Diagnostic System Check - Vehicle prior to using this diagnostic procedure.
- Review Strategy Based Diagnosis for an overview of the diagnostic approach.
- Diagnostic Procedure Instructions provides an overview of each diagnostic category.

DTC Descriptors

DTC C0110 00: Pump Motor Circuit Malfunction

DTC C0110 61: Pump Motor Stuck

DTC C12E0 00: ABS Pump Motor Performance

DTC C12E8 00: ABS Pump Motor Stuck

DTC C12E9 00: ABS Pump Motor Stuck On

Diagnostic Fault Information

Circuit	Short to Ground	Open/High Resistance	Short to Voltage	Signal Performance
B+	C0110 00	C0110 00	--	C0110 61, C12E8 00, C12E9 00
Ground	--	C0110 00	--	--

Component	Condition	DTCs
Pump Motor	• Wear • Damage • Lock	C0110 61

Circuit/System Description

The pump motor is a bi-directional motor and is an internal part of the brake pressure modulator. There are three solid state relays in the electronic brake control module that operate the pump. The pump motor runs every few brake stops in order to fill the high pressure accumulator with brake fluid.

Conditions for Running the DTC

- Vehicle ON or Vehicle in Service Mode.
- Ignition voltage is greater than 10 V.
- The system enable relay is ON.
- The pump motor has been commanded ON, OFF and ON again.

Conditions for Setting the DTC

- Brake system hydraulic leak.
- Excessive brake pedal applies.
- Improper hydraulic brake system bleed.
- The electronic brake control module detects a short to ground or an open/high resistance on the B+ circuit.
- The electronic brake control module detects an open/high resistance on the ground circuit.
- The electronic brake control module detects the pump motor runs continuously.
- The electronic brake control module detects the pump motor is binding or stalled.
- The brake pressure accumulator is not charging.
- If in the Vehicle in Service Mode for an unspecified length of time, the high pressure accumulator may relieve brake pressure enough to set this DTC.

Action Taken When the DTC Sets

- The ABS indicator turns ON.
- The red brake indicator turns ON.
- The traction control/stability control indicator turns ON.
- The Service Brake Assist and Service StabiliTrak messages are displayed on the driver information centre.
- The electronic brake control module disables the antilock brake system, the traction control system and the electronic stability program for the duration of the drive cycle.

Conditions for Clearing the DTC

- The condition for setting the DTC is no longer present.
- The history DTC will clear after 40 consecutive fault-free drive cycles have occurred.

Diagnostic Aids

- Check for hydraulic leaks, air in the brake system or incorrect brake bleed.

- DTC C0110 may set if the vehicle has been in the Service Mode for an extended period of time.
- Find out from the customer the conditions under which the DTC was set. This information may help duplicate the concern like the specific number of brake pedal applies in a row prior to the fault set.

Reference Information

Schematic Reference

Antilock Brake System Schematics

Connector End View Reference

Component Connector End Views

Description and Operation

ABS Description and Operation

Electrical Information Reference

- Circuit Testing
- Connector Repairs
- Testing for Intermittent Conditions and Poor Connections
- Wiring Repairs

Scan Tool Reference

Control Module References for scan tool information

Circuit/System Verification

Note: DTC C0110 may set if the vehicle has been in the Service Mode for an extended period of time.

1. Vehicle in Service Mode.
2. Verify that DTC C029C is not set.
   If the DTC is set
   If the DTC is set, refer DTC C029C, C120C, C129A-C129F, C12B1, or C12F8 .
   If the DTC is not set
3. Perform a brake hydraulic system test, refer to Brake Hydraulic and Assist System Diagnosis .

If the brake hydraulic system test does not pass

Repair as necessary.

If the brake hydraulic system tests normal

4. Refer to Circuit/System Testing.

Circuit/System Testing

Note: DTC C0110 may set if the vehicle has been in the Service Mode for an extended period of time.

1. Vehicle OFF and all vehicle systems OFF, disconnect the harness connector at the K17 electronic brake control module. It may take up to 2 minutes for all vehicle systems to power down.
2. Test for less than 10 Ω between the ground circuit terminal 13 and ground:

   If 10 Ω or greater

   2.1. Vehicle OFF.

   2.2. Test for less than 2 Ω in the ground circuit end to end.

   If 2 Ω or greater, repair the open/high resistance in the circuit.

   If less than 2 Ω, repair the open/high resistance in the ground connection.

   If less than 10 Ω

3. Vehicle in Service Mode.
4. Verify that a test lamp illuminates between the B+ circuit terminal 1 and ground.

   If the test lamp does not illuminate and the circuit fuse is good

   4.1. Vehicle OFF.

   4.2. Test for less than 2 Ω in the B+ circuit end to end.

   If 2 Ω or greater, repair the open/high resistance in the circuit.

   If less than 2 Ω, verify the fuse is not open and there is voltage at the fuse.

   If the test lamp does not illuminate and the circuit fuse is open

   4.1. Vehicle OFF.

   4.2. Test for infinite resistance between the B+ circuit and ground.

   If less than infinite resistance, repair the short to ground on the circuit.

   If infinite resistance, replace the Q5 brake pressure modulator.

   If the test illuminates

5. Replace the Q5 brake pressure modulator.

Repair Instructions

Perform the Diagnostic Repair Verification after completing the repair.

- Electronic Brake Control Module with Brake Pressure Modulator Valve Replacement

- Control Module References for electronic brake control module replacement, programming and setup

&#169© Copyright Chevrolet. All rights reserved

DTC C012A, C128B, C128E, or C12B2-C12B4

Diagnostic Instructions

- Perform the Diagnostic System Check - Vehicle prior to using this diagnostic procedure.
- Review Strategy Based Diagnosis for an overview of the diagnostic approach.
- Diagnostic Procedure Instructions provides an overview of each diagnostic category.

DTC Descriptors

DTC C012A 00: Brake Master Cylinder Pressure Sensor Malfunction

DTC C128E 00: ABS Master Cylinder Pressure Sensor Raw Offset Error

DTC C012A 01: Brake Master Cylinder Pressure Sensor Low Voltage/Open

DTC C12B3 00: ABS Master Cylinder Pressure Sensor Circuit Short To Battery

DTC C012A 06: Brake Master Cylinder Pressure Sensor Short to Ground or Open

DTC C12B2 00: ABS Master Cylinder Pressure Sensor Circuit Open or Short To Ground

DTC C012A 11: Brake Master Cylinder Pressure Sensor High Input

DTC C128B 00: ABS Master Cylinder Pressure Sensor Offset Error

DTC C012A 0F: Brake Master Cylinder Pressure Sensor Signal Erratic

DTC C12B4 00: ABS Master Cylinder Pressure Sensor Performance

Circuit/System Description

The electronic brake control module uses input from the master cylinder pressure sensor for more accurate control during a vehicle stability enhancement system event. The

master cylinder pressure sensor is internal to the brake pressure modulator.

Conditions for Running the DTC

- The brake pedal is not applied.
- Ignition voltage is greater than 10 V.
- Vehicle ON or Vehicle in Service Mode.

Conditions for Setting the DTC

C012A 00, C128E 00 or C128B 00

- The Electronic Brake Control Module Learn was not successful.
- The master cylinder pressure sensor raw offset is out of specified range.
- An internal electronic or mechanical fault is detected in the master cylinder pressure sensor.

C012A 01 or C12B3 00

A short to battery is detected on the sensor signal circuit.

C012A 06 or C12B2 00

A short to ground or open is detected on the sensor signal circuit.

C012A 11

Improper learn procedure performed.

C012A 0F or C12B4 00

The signal is erratic and changes to fast.

Action Taken When the DTC Sets

- The ABS indicator turns ON.
- The red brake indicator turns ON.
- The traction control/stability control indicator turns ON.
- The Service Brake Assist and Service StabiliTrak messages are displayed on the driver information centre.

- The electronic brake control module disables the antilock brake system, the traction control system and the electronic stability program for the duration of the drive cycle.

Conditions for Clearing the DTC

- The condition for setting the DTC is no longer present.
- The history DTC will clear after 40 consecutive fault-free drive cycles have occurred.

Reference Information

Schematic Reference

Antilock Brake System Schematics

Connector End View Reference

Component Connector End Views

Description and Operation

ABS Description and Operation

Electrical Information Reference

- Circuit Testing
- Connector Repairs
- Testing for Intermittent Conditions and Poor Connections
- Wiring Repairs

Scan Tool Reference

Control Module References for scan tool information

Circuit/System Verification

1. Vehicle in Service Mode.
2. Perform the Electronic Brake Control Module Learn procedure with a scan tool.
3. Verify none of the DTCs listed below are set:
   - DTC C012A

- DTC C128B
- DTC C128E
- DTC C12B2
- DTC C12B3
- DTC C12B4

If any of the DTCs are set

3.1. Replace Q5 brake pressure modulator.
3.2. Verify the DTC does not set while operating the vehicle under the Conditions for Running the DTC.
If the DTC sets, replace K17 electronic brake control module.
If the DTC does not set
3.3. All OK.

If none of the DTCs are set

4. All OK.

Repair Instructions

Perform the Diagnostic Repair Verification after completing the repair.

- Electronic Brake Control Module with Brake Pressure Modulator Valve Replacement
- Control Module References for electronic brake control module replacement, programming and setup

&#169© Copyright Chevrolet. All rights reserved

DTC C012B or C12B6-C12B8

Diagnostic Instructions

- Perform the Diagnostic System Check - Vehicle prior to using this diagnostic procedure.
- Review Strategy Based Diagnosis for an overview of the diagnostic approach.
- Diagnostic Procedure Instructions provides an overview of each diagnostic category.

DTC Descriptors

DTC C012B 01: High Pressure Accumulator Pressure Sensor Short to Battery

DTC C12B7 00: ABS High Pressure Accumulator Pressure Sensor Circuit Short to Battery

DTC C012B 06: High Pressure Accumulator Pressure Sensor Low Voltage/Open

DTC C12B6 00: ABS High Pressure Accumulator Pressure Sensor Circuit Open or Short To Ground

DTC C012B 0F: High Pressure Accumulator Pressure Sensor Signal Erratic

DTC C12B8 00: ABS High Pressure Accumulator Pressure Sensor Erratic

Circuit/System Description

The high pressure accumulator is attached to the brake pressure modulator and provides up to 18,000 kPa (2,600 psi) for use when applying the brakes. The electronic brake control module uses input from the high pressure accumulator sensor for more accurate control during braking and vehicle stability enhancement system event.

Conditions for Running the DTC

- Ignition voltage is greater than 10 V.
- Vehicle ON or Vehicle in Service Mode.

Conditions for Setting the DTC

C012B 01 or C12B7 00

A short to battery is detected on the sensor signal circuit.

C012B 06 or C12B6 00

A short to ground or open is detected on signal circuit.

C012B 0F or C12B8 00

The signal is erratic and changes to fast.

Actions Taken when the DTC Sets

- The ABS indicator turns ON.
- The red brake indicator turns ON.
- The traction control/stability control indicator turns ON.
- The Service Brake Assist and Service StabiliTrak messages are displayed on the driver information centre.
- The electronic brake control module disables the antilock brake system, the dynamic rear proportioning, the traction control system and the electronic stability program for the duration of the drive cycle.

Conditions for Clearing the DTC

- The condition for setting the DTC is no longer present.
- The history DTC will clear after 40 consecutive fault-free drive cycles have occurred.

Reference Information

Schematic Reference

Antilock Brake System Schematics

Connector End View Reference

Component Connector End Views

Description and Operation

ABS Description and Operation

Electrical Information Reference

- Circuit Testing
- Connector Repairs
- Testing for Intermittent Conditions and Poor Connections
- Wiring Repairs

Scan Tool Reference

Control Module References for scan tool information

Circuit/System Verification

1. Vehicle in Service Mode.
2. Perform the Electronic Brake Control Module Learn procedure with a scan tool.
3. Verify none of the DTCs listed below are set:
   - DTC C012B
   - DTC C12B6
   - DTC C12B7
   - DTC C12B8

   If any of the DTCs are set

   3.1. Replace the Q5 brake pressure modulator.

   3.2. Verify the DTC does not set while operating the vehicle under the Conditions for Running the DTC.
   If the DTC sets, replace the K17 electronic brake control module.
   If the DTC does not set

   3.3. All OK.

   If none of the DTCs are set
4. All OK.

Repair Instructions

Perform the Diagnostic Repair Verification after completing the repair.

- Electronic Brake Control Module with Brake Pressure Modulator Valve Replacement
- Control Module References for electronic brake control module replacement, programming and setup

&#169© Copyright Chevrolet. All rights reserved

DTC C012C, C121A, C128C, C128F, C12B9, C12BA, C12BB, or C12F7

Diagnostic Instructions

- Perform the Diagnostic System Check - Vehicle prior to using this diagnostic procedure.
- Review Strategy Based Diagnosis for an overview of the diagnostic approach.
- Diagnostic Procedure Instructions provides an overview of each diagnostic category.

DTC Descriptors

DTC C12F7 00: ABS Boost Pressure Sensor and Regenerative Axle Pressure Sensor Not Plausible

DTC C128F 00: ABS Regenerative Axle Pressure Sensor Raw Offset Error

DTC C012C 01: Regenerative Axle Pressure Sensor Short to Battery

DTC C12BA 00: ABS Regenerative Axle Pressure Sensor Circuit Short To Battery

DTC C012C 06: Regenerative Axle Pressure Sensor Low Voltage/Open

DTC C12B9 00: ABS Regenerative Axle Pressure Sensor Circuit Open or Short To Ground

DTC C012C 11: Regenerative Axle Pressure Sensor High Input

DTC C128C 00: ABS Regenerative Axle Pressure Sensor Offset Error

DTC C012C 0F: Regenerative Axle Pressure Sensor Signal Erratic

DTC C12BB 00: ABS Regenerative Axle Pressure Sensor Erratic

DTC C121A 00: ABS Regenerative Axle Pressure Performance

Circuit/System Description

The electronic brake control module uses input from the regenerative axle pressure sensor for more accurate control during a brake and vehicle stability enhancement system event. The regenerative axle pressure sensor is internal to the brake pressure modulator.

Conditions for Running the DTC

- Vehicle in Service Mode.
- Ignition voltage is greater than 10 V.

Conditions for Setting the DTC

C012C 01 or C12BA 00

A short to battery is detected on the sensor signal circuit.

C012C 06 or C12B9 00

A short to ground or open is detected signal circuit.

C012C 11, C121A 00, C12F7 00, C128C 00 or C128F 00

Internal sensor failure is detected.

C012C 0F or C12BB 00

Signal is erratic and changes to fast.

Actions Taken when the DTC Sets

- The ABS indicator turns ON.
- The red brake indicator turns ON.
- The traction control/stability control indicator turns ON.
- The Service Brake Assist and Service StabiliTrak messages are displayed on the driver information centre.
- The electronic brake control module disables the antilock brake system, the dynamic rear proportioning, the traction control system and the electronic stability program for the duration of the drive cycle.

Conditions for Clearing the DTC

- The condition for setting the DTC is no longer present.

- The history DTC will clear after 40 consecutive fault-free drive cycles have occurred.

Reference Information

Schematic Reference

Antilock Brake System Schematics

Connector End View Reference

Component Connector End Views

Description and Operation

ABS Description and Operation

Electrical Information Reference

- Circuit Testing
- Connector Repairs
- Testing for Intermittent Conditions and Poor Connections
- Wiring Repairs

Scan Tool Reference

Control Module References for scan tool information

Circuit/System Verification

1. Vehicle in Service Mode.
2. Perform the Electronic Brake Control Module Learn procedure with a scan tool.
3. Verify none of the DTCs listed below are set:
   - DTC C012C
   - DTC C121A
   - DTC C128C
   - DTC C128F
   - DTC C12B9

   DTC C12BA

-
- DTC C12BB
- DTC C12F7

If any of the DTCs are set

3.1. Replace the Q5 brake pressure modulator.
3.2. Verify the DTC does not set while operating the vehicle under the Conditions for Running the DTC.
If the DTC sets, replace the K17 electronic brake control module.
If the DTC does not set
3.3. All OK.

If none of the DTCs are set

4. All OK.

Repair Instructions

Perform the Diagnostic Repair Verification after completing the repair.

- Electronic Brake Control Module with Brake Pressure Modulator Valve Replacement
- Control Module References for electronic brake control module replacement, programming and setup

&#169© Copyright Chevrolet. All rights reserved

DTC C012D, C120A, C128A, C128D, C12BC, or C12BE

Diagnostic Instructions

- Perform the Diagnostic System Check - Vehicle prior to using this diagnostic procedure.
- Review Strategy Based Diagnosis for an overview of the diagnostic approach.
- Diagnostic Procedure Instructions provides an overview of each diagnostic category.

DTC Descriptors

DTC C012D 00: Brake Boost Regulation Pressure Sensor Malfunction

DTC C012D 01: Brake Boost Regulation Pressure Sensor Short to Battery

DTC C012D 06: Brake Boost Regulation Pressure Sensor Low Voltage/Open

DTC C012D 0F: Brake Boost Regulation Pressure Sensor Signal Erratic

DTC C012D 11: Brake Boost Regulation Pressure Sensor High Input

DTC C012D 5A: Brake Boost Regulation Pressure Sensor Not Plausible

DTC C120A 00: ABS Pump Pressure Performance

DTC C128A 00: ABS Boost Pressure Sensor Offset Error

DTC C128D 00: ABS Boost Pressure Sensor Offset Error

DTC C12BC 00: ABS Boost Pressure Sensor Circuit Open or Short to Ground

DTC C12BE 00: ABS Boost Pressure Sensor Erratic

Circuit/System Description

The electronic brake control module uses input from the boost pressure sensor for more accurate control during brake and vehicle stability enhancement system event. The boost pressure sensor is internal to the brake pressure modulator valve assembly.

Conditions for Running the DTC

- Vehicle ON or Vehicle in Service Mode.
- The ignition voltage is greater than 10 V.

Conditions for Setting the DTC

C012D 00, C128D 00, C012D 11 or C128A 00

Internal sensor failure is detected.

C012D 01

A short to battery is detected on the sensor signal circuit.

C012D 06 or C12BC 00

A short to ground or open is detected signal circuit.

C012D 5A or C120A 00

The boost pressure being commanded is not being achieved.

C012D 0F or C12BE 00

Signal is erratic and changes faster than physically allowed.

Action Taken When the DTC Sets

- The electronic brake control module disables the ABS and vehicle stability enhancement system for the duration of the drive cycle.
- A driver information centre message and/or a warning indicator may be displayed.

Conditions for Clearing the DTC

- The condition for setting the DTC is no longer present.

- The electronic brake control module clears the history DTC when a current DTC is not detected in 40 consecutive drive cycles.

Reference Information

Schematic Reference

Antilock Brake System Schematics

Connector End View Reference

Component Connector End Views

Description and Operation

ABS Description and Operation

Electrical Information Reference

- Circuit Testing
- Connector Repairs
- Testing for Intermittent Conditions and Poor Connections
- Wiring Repairs

Scan Tool Reference

Control Module References for scan tool information

Circuit/System Verification

1. Vehicle in Service Mode.
2. Verify that no other electronic brake control module DTCs are set.
   If any DTC are set
   Refer to Diagnostic Trouble Code (DTC) List - Vehicle
   If none DTCs are set
3. Perform the Electronic Brake Control Module Learn procedure with a scan tool.
4. Verify that DTC C012D, C120A, C128A, C128D, C12BC, or C12BE is not set.
   If any listed DTCs are set
   4.1. Replace the Q5 Brake Pressure Modulator.

4.2. Verify the DTC does not reset.
If the DTC resets, replace the K17 Electronic Brake Control Module.

If none of the listed DTCs are set

5. All OK.

Repair Instructions

Perform the Diagnostic Repair Verification after completing the repair.

- Electronic Brake Control Module with Brake Pressure Modulator Valve Replacement
- Control Module References for electronic brake control module replacement, programming and setup

&#169© Copyright Chevrolet. All rights reserved

DTC C012E or C12FE

Diagnostic Instructions

- Perform the Diagnostic System Check - Vehicle prior to using this diagnostic procedure.
- Review Strategy Based Diagnosis for an overview of the diagnostic approach.
- Diagnostic Procedure Instructions provides an overview of each diagnostic category.

DTC Descriptors

DTC C012E 00: Hydraulic Brake Boost Pressure Loss Malfunction

DTC C12FE 00: ABS Pump Pressure Loss

DTC C012E 12: Hydraulic Brake Boost Pressure Loss Low Input

Circuit/System Description

The boost pressure valve is internal to the brake pressure modulator. The electronic brake control module monitors the boost pressure. The boost valve controls the amount of hydraulic boost required during braking or a vehicle stability event.

When a boost fault condition is detected, the boost control will continue applying as much pressure as possible until boost pressure is no longer available.

Conditions for Running the DTC

- Ignition voltage is greater than 10 V.
- Brake pedal was applied.

Conditions for Setting the DTC

- A boost valve fault.
- Brake system hydraulic leak.

- Excessive brake pedal applies.
- Improper brake hydraulic system bleed.
- Master cylinder pressure is greater than boost pressure.

Action Taken When the DTC Sets

- The ABS indicator turns ON.
- The red brake indicator turns ON.
- The traction control/stability control indicator turns ON.
- The Service Brake Assist and Service StabiliTrak messages are displayed on the driver information centre.
- The electronic brake control module disables the antilock brake system, the traction control system and the electronic stability program for the duration of the drive cycle.

Conditions for Clearing the DTC

- The condition for setting the DTC is no longer present.
- The history DTC will clear after 40 consecutive fault-free drive cycles have occurred.

Diagnostic Aids

Excessive brake pedal applies (10 or more applies in 30 seconds) may cause the DTC to set.

Reference Information

Schematic Reference

Antilock Brake System Schematics

Connector End View Reference

Component Connector End Views

Description and Operation

ABS Description and Operation

Electrical Information Reference

- Circuit Testing

- Connector Repairs
- Testing for Intermittent Conditions and Poor Connections
- Wiring Repairs

Scan Tool Reference

Control Module References for scan tool information

Circuit/System Verification

Note: The 12 V battery must be able to maintain a charge during this brake sensor performance procedure. It is recommended that a charger/maintainer or equivalent be used to maintain proper battery voltage during this procedure.

1. Vehicle in Service Mode with the transmission in PARK.

   Note: Do not depress the brake pedal during the Electronic Brake Control Module Learn.

2. Perform the Electronic Brake Control Module Learn procedure with a scan tool.

   Note: To ensure the complete brake modulator and high pressure accumulator pressure relief procedure is allowed to occur; the brake controller must see 1 pedal apply with the propulsion system enabled, followed by a proper shutdown without applying the brake pedal.

3. Vehicle ON, apply and release the brake pedal.

   Note: Vehicle OFF, without applying the brake pedal ensure the brake modulator and high pressure accumulator pressure relief occurs. This process will take approximately 1-3 minutes.

4. Vehicle OFF, without applying the brake pedal.
5. Remove the remote keyless entry transmitter and close all of the vehicle doors. Wait approximately 1-3 minutes until the brake modulator and the high pressure accumulator pressure relief is complete and the vehicle powers down.
6. Vehicle ON, brakes not applied.
7. Verify the scan tool parameters listed below are within the specified range:
   - Brake Controls Brake Pedal Position Sensor 5 V Supply Voltage - Between 4.75-5.25 V.
   - Brake Controls Brake Pedal Position Sensor Circuit 1 - Between 1.4-1.7 V
   - Brake Controls Brake Pedal Position Sensor Circuit 2 - Between 58-78%

   If any of the parameters are not within the specified range

   Refer to DTC C029C, C120C, C129A-C129F, C12B1, or C12F8 .

   If all of the parameters are within the specified range
8. Vehicle ON, brakes not applied.
9. Verify the scan tool parameters listed below are less the specified range:

- Brake Master Cylinder Pressure Sensor - Less than 100 kPa (15 psi)
- Brake Pressure Sensor - Less than 100 kPa (15 psi)
- High Pressure Accumulator Sensor - Less than 800 kPa (116 psi)

If any parameter is greater than the specified range

Replace the Q5 brake pressure modulator.

If all of the parameters are less than the specified range

10. Perform a brake hydraulic system test, refer to Brake Hydraulic and Assist System Diagnosis .

If the brake hydraulic system test does not pass

Repair as necessary.

If the brake hydraulic system tests normal

11. Replace the Q5 brake pressure modulator.
12. Verify the DTC does not set while operating the vehicle under the Conditions for Running the DTC.

If the DTC sets

Replace the K17 electronic brake control module

If the DTC does not set

13. All OK.

Repair Instructions

Perform the Diagnostic Repair Verification after completing the repair.

- Electronic Brake Control Module with Brake Pressure Modulator Valve Replacement
- Control Module References for electronic brake control module replacement, programming and setup

&#169© Copyright Chevrolet. All rights reserved

DTC C012F, C12A7, C12DC, or C12DD

Diagnostic Instructions

- Perform the Diagnostic System Check - Vehicle prior to using this diagnostic procedure.
- Review Strategy Based Diagnosis for an overview of the diagnostic approach.
- Diagnostic Procedure Instructions provides an overview of each diagnostic category.

DTC Descriptors

DTC C012F 00: Brake Boost Solenoid Valve Circuit Malfunction

DTC C12A7 00: ABS Brake Boost Solenoid Valve Circuit Performance

DTC C12DC 00: ABS Brake Boost Solenoid Valve Circuit Malfunction

Circuit/System Description

The brake boost solenoid valve is used to control the amount of brake fluid flow from the high pressure accumulator, which provides brake assist and an improved brake pedal feel. The brake boost solenoid valve is an internal part of the brake pressure modulator.

Conditions for Running the DTC

- Ignition voltage is greater than 10 V.
- The Vehicle ON or Vehicle in Service Mode.

Conditions for Setting the DTC

Solenoid feedback current is greater than 25% of commanded current.

Action Taken When the DTC Sets

- The ABS indicator turns ON.
- The red brake indicator turns ON.
- The traction control/stability control indicator turns ON.
- The Service Brake Assist and Service StabiliTrak messages are displayed on the driver information centre.
- The electronic brake control module disables the antilock brake system, the traction control system and the electronic stability program for the duration of the drive cycle.

Conditions for Clearing the DTC

- The condition for setting the DTC is no longer present.
- The history DTC will clear after 40 consecutive fault-free drive cycles have occurred.

Reference Information

Schematic Reference

Antilock Brake System Schematics

Connector End View Reference

Component Connector End Views

Description and Operation

ABS Description and Operation

Electrical Information Reference

- Circuit Testing
- Connector Repairs
- Testing for Intermittent Conditions and Poor Connections
- Wiring Repairs

Scan Tool Reference

Control Module References for scan tool information

Circuit/System Verification

Note: The 12 V battery must be able to maintain a charge during this brake sensor performance procedure. It is recommended that a charger/maintainer or equivalent be used to maintain proper battery voltage during this procedure.

1. Vehicle in Service Mode with the transmission in PARK.

   Note: Do not depress the brake pedal during the Electronic Brake Control Module Learn.

2. Perform the Electronic Brake Control Module Learn procedure with a scan tool.

   Note: To ensure the complete brake modulator and high pressure accumulator pressure relief procedure is allowed to occur; the brake controller must see 1 pedal apply with the propulsion system enabled, followed by a proper shutdown without applying the brake pedal.

3. Vehicle ON, apply and release the brake pedal.

   Note: Vehicle OFF, without applying the brake pedal ensure the brake modulator and high pressure accumulator pressure relief occurs. This process will take approximately 1-3 minutes.

4. Vehicle OFF, without applying the brake pedal,
5. Remove the remote keyless entry transmitter and close all of the vehicle doors. Wait approximately 1-3 minutes until the brake modulator and the high pressure accumulator pressure relief is complete and the vehicle powers down.
6. Vehicle ON, brakes not applied.
7. Verify the scan tool parameters listed below are within the specified range:
   - Brake Controls Brake Pedal Position Sensor 5 V Supply Voltage - Between 4.75-5.25 V.
   - Brake Controls Brake Pedal Position Sensor Circuit 1 - Between 1.4-1.7 V
   - Brake Controls Brake Pedal Position Sensor Circuit 2 - Between 58 78%

   If any parameter is not within the specified range

   Refer to Circuit/System Testing.

   If all parameters are within the specified range
8. Vehicle ON, brakes not applied.
9. Verify the scan tool parameters listed below are less the specified range:
   - Brake Master Cylinder Pressure Sensor - Less than 100 kPa (15 psi)
   - Brake Pressure Sensor - Less than 100 kPa (15 psi)
   - High Pressure Accumulator Sensor - Less than 800 kPa (116 psi)

   If any parameter is greater than the specified range

   Replace the Q5 brake pressure modulator.

   If all parameters are less than the specified range
10. Perform a brake hydraulic system test, refer to Brake Hydraulic and Assist System Diagnosis .

    If the brake hydraulic system test does not pass

    Repair as necessary.

If the brake hydraulic system tests normal

11. Replace the Q5 brake pressure modulator.
12. Verify the DTC does not set while operating the vehicle under the Conditions for Running the DTC.

    If the DTC sets

    K17 electronic brake control module.

    If the DTC does not set

13. All OK.

Repair Instructions

Perform the Diagnostic Repair Verification after completing the repair.

- Electronic Brake Control Module with Brake Pressure Modulator Valve Replacement
- Control Module References for electronic brake control module replacement, programming and setup

&#169© Copyright Chevrolet. All rights reserved

DTC C0161

Diagnostic Instructions

- Perform the Diagnostic System Check - Vehicle prior to using this diagnostic procedure.
- Review Strategy Based Diagnosis for an overview of the diagnostic approach.
- Diagnostic Procedure Instructions provides an overview of each diagnostic category.

DTC Descriptor

DTC C0161 04: Antilock Braking System Brake Pedal Position Sensor Circuit Open

DTC C0161 0E: Antilock Braking System Brake Pedal Position Sensor Circuit Low Resistance

Circuit/System Description

The body control module monitors the brake pedal position sensor and sends a serial data message to the electronic brake control module when the brake pedal is applied. The electronic brake control module compares the correlation between the brake pedal positions and the brake control brake pedal position sensor to sense the driver's application of the brake pedal.

Conditions for Running the DTC

C0161 04

- Vehicle ON
- The brake pedal is applied.
- The ignition voltage is greater than 10 V.

C0161 0E

- Vehicle ON
- The ignition voltage is greater than 10 V.

- The vehicle speed is greater than 15 km/h (9 mph).
- The accelerator pedal position is greater than 20 percent.

Conditions for Setting the DTC

C0161 04

The brake pedal position sensor signal is not applied while the brake control brake pedal position sensor indicates the brake pedal is applied.

C0161 0E

The brake control brake pedal position sensor signal is showing the brakes applied while the vehicle speed is greater than 15 km/h (9 mph).

Action Taken When the DTC Sets

A driver information centre message and/or a warning indicator will not be displayed.

Conditions for Clearing the DTC

- The condition for setting the DTC is no longer present.
- The history DTC will clear after 40 consecutive fault-free drive cycles have occurred.

Diagnostic Aids

The DTC C0161 may set if the brake pedal is applied while accelerating.

Reference Information

Schematic Reference

Antilock Brake System Schematics

Connector End View Reference

Component Connector End Views

Description and Operation

ABS Description and Operation

Electrical Information Reference

- Circuit Testing
- Connector Repairs
- Testing for Intermittent Conditions and Poor Connections
- Wiring Repairs

Scan Tool Reference

Control Module References

Circuit/System Verification

Note: Diagnose all other brake lamp DTCs or Symptoms prior to performing this diagnostic procedure.

1. Vehicle ON.
2. Verify that DTC C0277 or C0890 is not set.
   If either DTC is set
   Refer to Diagnostic Trouble Code (DTC) List - Vehicle .
   If either DTC is not set
3. Verify the brake pedal position sensor or the brake pedal is not binding causing residual brake pressure to be detected.
   If a condition is found
   Repair or replace the applicable component.
   If a condition is not found
4. Verify the scan tool electronic brake control module Brake Pedal Position Sensor Signal parameter changes between Applied and Released when applying and releasing the brake pedal.
   If the parameter does not change
   Refer to Symptoms - Lighting .
   If the parameter changes
5. Replace the K17 electronic brake control module.

Repair Instructions

Perform the Diagnostic Repair Verification after completing the repair.

Control Module References for electronic brake control module replacement, programming and setup

&#169© Copyright Chevrolet. All rights reserved

DTC C0186, C0196, or C0287

Diagnostic Instructions

- Perform the Diagnostic System Check - Vehicle prior to using this diagnostic procedure.
- Review Strategy Based Diagnosis for an overview of the diagnostic approach.
- Diagnostic Procedure Instructions provides an overview of each diagnostic category.

DTC Descriptors

DTC C0186 00: Lateral Acceleration Sensor Signal Malfunction

DTC C0186 09: Lateral Acceleration Sensor Signal Too Fast Transitions

DTC C0186 11: Lateral Acceleration Sensor Signal High Input

DTC C0186 18: Lateral Acceleration Sensor Signal Low Signal Amplitude

DTC C0196 00: Yaw Rate Signal Malfunction

DTC C0196 09: Yaw Rate Signal Too Fast Transitions

DTC C0196 0A: Yaw Rate Signal Too Slow Transitions

DTC C0196 11: Yaw Rate Signal High Input

DTC C0196 18: Yaw Rate Circuit Signal Low Signal Amplitude

DTC C0287 00: Longitudinal Acceleration Sensor Circuit Malfunction

DTC C0287 09: Longitudinal Acceleration Sensor Circuit Too Fast Transitions

DTC C0287 11: Longitudinal Acceleration Sensor High Input

DTC C0287 18: Longitudinal Acceleration Sensor Circuit Low Signal Amplitude

Diagnostic Fault Information

Circuit	Short to Ground	Open/High Resistance	Short to Voltage	Signal Performance
Ignition	U0125	U0125	--	--
Ground	--	U0125	--	--

Circuit/System Description

The yaw rate, lateral acceleration and longitudinal acceleration sensors are combined into one multi-axis acceleration sensor, external to the electronic brake control module. The electronic brake control module supplies ignition voltage to the multi-axis acceleration sensor. The multi-axis acceleration sensor communicates with the electronic brake control module via serial data. The electronic brake control module activates the stability control function depending on multi-axis acceleration sensor input.

Conditions for Running the DTC

- Vehicle ON or Vehicle in Service Mode.
- The ignition voltage is greater than 10 V.

Conditions for Setting the DTC

C0186 00, C0186 11, C0186 18, C0196 0A, C0287 00, C0287 09, C0287 11 or C0287 18

The multi-axis acceleration sensor fails an internal self test.

C0196 00, C0196 11, or C0196 18

The yaw sensor is out of specified range.

C0186 09, C0196 09, C0287 00, C0287 09 or C0287 11

The multi-axis acceleration sensor is not mounted properly.

Action Taken When the DTC Sets

- The stability control indicator turns ON.
- The Service StabiliTrak message is displayed on the driver information centre.

- The electronic brake control module disables the electronic stability system for the duration of the ignition cycle.

Conditions for Clearing the DTC

- In order for the DTC to clear the electronic stability control system must be initialised. Perform the steps listed below to initialise the system:
  1. Vehicle OFF, open the driver door and remove all keyless entry transmitters from the vehicle and secure in a place outside the vehicle.
  2. Close the driver door and let the vehicle sit for 3 minutes.
  3. Vehicle ON, leave the vehicle in Park for greater than 10 seconds.
  4. Drive the vehicle in a straight line at a speed greater than 32 km/h (20 mph) for 30 seconds.
- The condition for setting the DTC is no longer present.
- The history DTC will clear after 40 consecutive fault-free drive cycles have occurred.

Diagnostic Aids

DTC C0196 may have been improperly set due to the vehicle being transported on a flat bed truck, car hauler, or by train without it being completely shut down. The electronic stability control system may need to be initialised before the DTC will clear. Refer to Conditions for Clearing the DTC above.

Reference Information

Schematic Reference

Antilock Brake System Schematics

Connector End View Reference

Component Connector End Views

Description and Operation

ABS Description and Operation

Electrical Information Reference

- Circuit Testing
- Connector Repairs
- Testing for Intermittent Conditions and Poor Connections
- Wiring Repairs

Scan Tool Reference

Control Module References for scan tool information

Circuit/System Verification

Note: DTC C0196 may have been improperly set due to the vehicle being transported on a flat bed truck, car hauler, or by train without it being completely shut down. The electronic stability control system may need to be initialised before the DTC will clear. Refer to Conditions for Clearing the DTC.

1. Vehicle in Service Mode.
2. Verify that DTC U0125 is not set.
   If the DTC is set
   Refer to Diagnostic Trouble Code (DTC) List - Vehicle .
   If the DTC is not set
3. Verify the B119 multi-axis acceleration sensor is installed correctly.
   If loose or incorrect installation
   Correct the installation of the component.
   If installed correctly
4. Perform the Vehicle Yaw Sensor Learn .
5. Verify the DTC does not set while operating the vehicle under the Conditions for Running the DTC.
   If the DTC sets
   Refer to Circuit/System Testing.
   If the DTC does not set
6. All OK.

Circuit/System Testing

Note: DTC C0196 may have been improperly set due to the vehicle being transported on a flat bed truck, car hauler, or by train without it being completely shut down. The electronic stability control system may need to be initialised before the DTC will clear. Refer to Conditions for Clearing the DTC.

1. Vehicle OFF and all vehicle systems OFF, disconnect the harness connector at the B119 multi-axis acceleration sensor. It may take up to 2 minutes for all vehicle systems to power down.
2. Test for less than 10 Ω between the ground circuit terminal 6 and ground.
   If 10 Ω or greater
   2.1. Vehicle OFF.
   2.2. Test for less than 2 Ω in the ground circuit end to end.
   If 2 Ω or greater, repair the open/high resistance in the circuit.
   If less than 2 Ω, repair the open/high resistance in the ground connection.
   If less than 10 Ω

3. Vehicle in Service Mode.
4. Verify that a test lamp illuminates between the ignition circuit terminal 5 and ground.
   If the test lamp does not illuminate
   4.1. Vehicle OFF, disconnect the harness connector at the K17 electronic brake control module.
   4.2. Test for infinite resistance between the ignition circuit and ground.
   If less than infinite resistance, repair the short to ground on the circuit.
   If infinite resistance
   4.3. Test for less than 2 Ω in the ignition circuit end to end.
   If 2 Ω or greater, repair the open/high resistance in the circuit.
   If less than 2 Ω, replace the K17 electronic brake control module.
   If the test lamp illuminates
5. Replace the B119 multi-axis acceleration sensor.
6. Verify the DTC does not set while operating the vehicle under the Conditions for Running the DTC.
   If the DTC sets
   Replace the K17 electronic brake control module.
   If the DTC does not set
7. All OK.

Repair Instructions

Perform the Diagnostic Repair Verification after completing the repair.

- Vehicle Yaw Sensor with Vehicle Lateral and Longitudinal Accelerometer Replacement
- Control Module References for electronic brake control module replacement, programming and setup

&#169© Copyright Chevrolet. All rights reserved

DTC C0201, C120D, or C120E

Diagnostic Instructions

- Perform the Diagnostic System Check - Vehicle prior to using this diagnostic procedure.
- Review Strategy Based Diagnosis for an overview of the diagnostic approach.
- Diagnostic Procedure Instructions provides an overview of each diagnostic category.

DTC Descriptors

DTC C0201 04: Antilock Brake System Enable Relay Primary Circuit Open

DTC C120D 00: Traction Control Power Switch Circuit Open

DTC C0201 0E: Antilock Brake System Enable Relay Contact Circuit Low Resistance

DTC C120E 00: Traction Control Power Switch Circuit Shorted

Diagnostic Fault Information

Circuit	Short to Ground	Open/High Resistance	Short to Voltage	Signal Performance
B+	C0201 04	C0201 04	--	--
Ground Terminal 13	-	C056D 00, C12DA 00, C12D7 00	--	--
Ground Terminal 38	-	U0129 00, U1833 00	--	--

Circuit/System Description

Battery positive voltage is supplied to the electronic brake control module at all times through a 40 A fuse located in the under-bonnet fuse block. The electronic brake control module uses this voltage to power the pump motor. The pump motor is an integral part of the brake pressure modulator, while the pump motor relay is integral to the electronic brake control module. The pump motor relay is not engaged during normal system operation. When the antilock brake system or traction control system operation is required the electronic brake control module activates the pump motor relay and turns the pump motor ON.

Conditions for Running the DTC

C0201 04 or C120D 00

- Ignition voltage is greater than 10 V.
- The solenoid relay is commanded ON.

C0201 0E or C120E 00

- Ignition voltage is greater than 10 V.
- The solenoid relay is commanded OFF.

Conditions for Setting the DTC

C0201 04 or C120D 00

- The electronic brake control module detects an open in the B+ circuit.
- The engine control module detects the traction control power switch circuit is open.

C0201 0E or C120E 00

- The electronic brake control module detects an internal power switch shorted.
- The engine control module detects the traction control power switch circuit is shorted.

Action Taken When the DTC Sets

- The ABS indicator turns ON.
- The traction control/stability control indicator turns ON.
- The Service StabiliTrak message is displayed on the driver information centre.
- The electronic brake control module disables the traction control and the electronic stability control for the duration of the drive cycle.

Conditions for Clearing the DTC

- The condition for setting the DTC is no longer present.
- The history DTC will clear after 40 consecutive fault-free drive cycles have occurred.

Reference Information

Schematic Reference

Antilock Brake System Schematics

Connector End View Reference

Component Connector End Views

Description and Operation

ABS Description and Operation

Electrical Information Reference

- Circuit Testing
- Connector Repairs
- Testing for Intermittent Conditions and Poor Connections
- Wiring Repairs

Scan Tool Reference

Control Module References for scan tool information

Circuit/System Testing

1. Vehicle OFF all vehicle systems OFF, disconnect the harness connector at the K17 electronic brake control module. It may take up to 2 minutes for all vehicle systems to power down.
2. Test for less than 10 Ω between the ground circuit terminals listed below and ground:
   - Terminal 13
   - Terminal 38

   If 10 Ω or greater

   2.1. Vehicle OFF.

   2.2. Test for less than 2 Ω in the ground circuit end to end.

   If 2 Ω or greater, repair the open/high resistance in the circuit.

   If less than 2 Ω, repair the open/high resistance in the ground connection.

   If less than 10 Ω
3. Vehicle in Service Mode, verify a test lamp illuminates between the B+ circuit terminal 25 and ground.

   If the test lamp does not illuminate and the circuit fuse is good

3.1. Vehicle OFF.
3.2. Test for less than 2 Ω in the B+ circuit end to end.
If 2 Ω or greater, repair the open/high resistance in the circuit.
If less than 2 Ω, verify the fuse is not open and there is voltage at the fuse.
If the test lamp does not illuminate and the circuit fuse is open
3.3. Vehicle OFF.
3.4. Test for infinite resistance between the B+ circuit and ground.
If less than infinite resistance, repair the short to ground on the circuit.
If infinite resistance, replace the K17 electronic brake control module.

If the test lamp illuminates

4. Replace the K17 electronic brake control module.
5. Verify the DTC does not set while operating the vehicle under the Conditions for Running the DTC.
If the DTC sets
Replace the Q5 brake pressure modulator.
If the DTC does not set
6. All OK.

Repair Instructions

Perform the Diagnostic Repair Verification after completing the repair.

- Electronic Brake Control Module with Brake Pressure Modulator Valve Replacement
- Control Module References for electronic brake control module replacement, programming and setup

&#169© Copyright Chevrolet. All rights reserved

DTC C0242 or P0856

Diagnostic Instructions

- Perform the Diagnostic System Check - Vehicle prior to using this diagnostic procedure.
- Review Strategy Based Diagnosis for an overview of the diagnostic approach.
- Diagnostic Procedure Instructions provides an overview of each diagnostic category.

DTC Descriptors

DTC C0242 00: Powertrain Control Module Indicated Traction Control Malfunction

DTC P0856: Engine Control Module (ECM) Traction Control Torque Request Circuit

Circuit/System Description

The electronic brake control module and the engine control module simultaneously control the traction control. The electronic brake control module sends a serial data message to the engine control module requesting torque reduction. When certain engine control module DTCs are set, the engine control module will not be able to perform the torque reduction for traction control. A serial data message is sent to the electronic brake control module indicating that traction control is not allowed.

Conditions for Running the DTC

- Vehicle in Service Mode.
- The ignition voltage is greater than 10 V.

Conditions for Setting the DTC

The engine control module diagnoses a condition preventing the engine control portion of the traction control function and sends a serial data message to the electronic brake control module indicating that torque reduction is not allowed.

Action Taken When the DTC Sets

- The ABS indicator turns ON.
- The MIL indicator may be on or flashing.
- The traction control/stability control indicator turns ON.
- The Service StabiliTrak message is displayed on the driver information centre.
- The electronic brake control module disables the antilock brake system, the traction control system and the electronic stability program for the duration of the drive cycle.

Conditions for Clearing the DTC

- The condition for setting the DTC is no longer present.
- The history DTC will clear after 40 consecutive fault-free drive cycles have occurred.

Reference Information

Schematic Reference

Antilock Brake System Schematics

Connector End View Reference

Component Connector End Views

Description and Operation

ABS Description and Operation

Electrical Information Reference

- Circuit Testing
- Connector Repairs
- Testing for Intermittent Conditions and Poor Connections
- Wiring Repairs

Scan Tool Reference

Control Module References for scan tool information

Circuit/System Verification

1. Vehicle in Service Mode.
2. Verify that no other DTCs are set except for C0242 or P0856.
   If any other DTCs are set
   Refer to Diagnostic Trouble Code (DTC) List - Vehicle .
   If no other DTCs are set
3. Replace the K20 engine control module.
4. Verify that DTC C0242 or P0856 does not set while operating the vehicle under the Conditions for Running the DTC. You may also operate the vehicle under the conditions that you observed from the Freeze Frame/Failure Records data.
   If DTC C0242 or P0856 sets
   Replace the K17 electronic brake control module.
   If DTC C0242 or P0856 does not set
5. All OK.

Repair Instructions

Perform the Diagnostic Repair Verification after completing the repair.

Control Module References for electronic brake control module or engine control module replacement, programming and setup

&#169© Copyright Chevrolet. All rights reserved

DTC C0245, C122E

Diagnostic Instructions

- Perform the Diagnostic System Check - Vehicle prior to using this diagnostic procedure.
- Review Strategy Based Diagnosis for an overview of the diagnostic approach.
- Diagnostic Procedure Instructions provides an overview of each diagnostic category.

DTC Descriptors

DTC C0245 00: Wheel Speed Sensor Frequency Error

DTC C122E: Tyre Size Mismatch

Circuit/System Description

The wheel speeds are detected by active wheel speed sensors. Each wheel speed sensor receives ignition voltage from the electronic brake control module and provides an alternating current square wave signal to the electronic brake control module. As the wheel spins, the module uses the frequency of the square wave signal to calculate the wheel speed.

Conditions for Running the DTC

- Vehicle On or Vehicle in Service Mode.
- Ignition voltage is greater than 10 V.
- Vehicle must be moving at a speed less than 14.5 km/h (9 mph).
- No wheel speed sensor faults are set.
- Brake is not applied.
- Vehicle is not cornering.
- No wheel spinning is detected.

Conditions for Setting the DTC

- Missing tooth or teeth on the wheel speed sensor tone ring.
- The wheel speed differences between one wheel and the others is greater than 25 percent.

Action Taken When the DTC Sets

- The ABS indicator turns ON.
- The red brake indicator turns ON.
- The traction control/stability control indicator turns ON.
- The Service Brake Assist and Service StabiliTrak messages are displayed on the driver information centre.
- The electronic brake control module disables the antilock brake system, the dynamic rear proportioning, the traction control system and the electronic stability program for the duration of the drive cycle.

Conditions for Clearing the DTC

- The condition for setting the DTC is no longer present.
- The history DTC will clear after 40 consecutive fault-free drive cycles have occurred.

Diagnostic Aids

- A faulty wheel speed sensor will not set this DTC.
- A vehicle using a space saver spare will not set this DTC.

Reference Information

Schematic Reference

Antilock Brake System Schematics

Connector End View Reference

Component Connector End Views

Description and Operation

ABS Description and Operation

Electrical Information Reference

- Circuit Testing
- Connector Repairs
- Testing for Intermittent Conditions and Poor Connections
- Wiring Repairs

Scan Tool Reference

Control Module References for scan tool information

Circuit/System Verification

1. Verify that all tyres have the proper air pressure.
   If not the proper air pressure
   Adjust the air pressure in all tyres to the stated cold air pressure as identified on the tyre placard or specification.
   If the proper air pressure
2. Verify that all tyres are of uniform size and matching brand.
   If not of uniform size or matching brand
   2.1. Replace the mis-sized or non-matching brand tyre.
   2.2. Vehicle in Service Mode.
   2.3. Verify the DTC does not set while operating the vehicle under the Conditions for Running the DTC.
   If the DTC is set, replace the K17 electronic brake control module.
   If the DTC does not set
   2.4. All OK.
   If all tyres are of uniform size or matching brand
3. All OK.

&#169© Copyright Chevrolet. All rights reserved

DTC C0252

Diagnostic Instructions

- Perform the Diagnostic System Check - Vehicle prior to using this diagnostic procedure.
- Review Strategy Based Diagnosis for an overview of the diagnostic approach.
- Diagnostic Procedure Instructions provides an overview of each diagnostic category.

DTC Descriptor

DTC C0252 00: Vehicle Stability Control Module Sensors Correlation Malfunction

Circuit/System Description

The electronic brake control module controls the vehicle stability control system by monitoring the inputs from the multi-axis acceleration sensor, wheel speed sensors, and the steering wheel angle sensor. All of the sensors need to correlate to the vehicle dynamics during the initial drive off in order to enable vehicle stability control. Normally this takes place within 100 metres (110 yards).

Conditions for Running the DTC

- Vehicle ON or Vehicle in Service Mode.
- Ignition voltage is greater than 10 V.
- The steer wheel angle sensor has been centered.
- The vehicle stability control system has not been initialised.
- The direction (understeer or oversteer) of the yaw rate error has not changed.
- Vehicle is moving.

Conditions for Setting the DTC

- Vehicle is driven in a straight line without centering or initialisation the stability control system.
- The yaw rate has not changed and the lateral acceleration is less than 0.5 g.

Action Taken When the DTC Sets

- The traction control/stability control indicator turns ON.
- The Service StabiliTrak message is displayed on the driver information centre.
- The electronic brake control module disables the electronic stability control for the duration of the drive cycle.

Conditions for Clearing the DTC

- The condition for setting the DTC is no longer present.
- The history DTC will clear after 40 consecutive fault-free drive cycles have occurred.

Diagnostic Aids

- The DTC C0252 can be set if the vehicle has been driven above 8 km (5 mph) on a winding road prior to the vehicle stability control system initialisation with the brake pedal applied and while accelerating.
- Driving off with constant steering wheel input or brake switch activation.
- An improperly mounted or loose combination multi-axis acceleration sensor.
- Stuck brake pedal position sensor.
- Improper steering wheel alignment or tyre pull.
- An internal multi-axis acceleration sensor failure.
- An electronic brake control module internal failure.

Reference Information

Schematic Reference

Antilock Brake System Schematics

Connector End View Reference

Component Connector End Views

Description and Operation

ABS Description and Operation

Electrical Information Reference

- Circuit Testing
- Connector Repairs
- Testing for Intermittent Conditions and Poor Connections
- Wiring Repairs

Scan Tool Reference

Control Module References for scan tool information

Circuit/System Verification

1. Vehicle in Service Mode.
2. Verify that DTC C0186, C0196 or C0710 is not set.
   If any of the DTCs are set
   Refer to Diagnostic Trouble Code (DTC) List - Vehicle .
   If none of the DTCs are set
3. Verify the B119 multi-axis acceleration sensor is installed correctly.
   If loose or incorrect installation
   Correct the installation of the component, refer to Vehicle Yaw Sensor with Vehicle Lateral and Longitudinal Accelerometer Replacement .
   If installed correctly
4. Verify the DTC does not set while operating the vehicle under normal driving conditions.
   If the DTC sets
   4.1. Replace the K17 electronic brake control module.
   4.2. Verify the DTC does not set while operating the vehicle under normal driving conditions.
   If the DTC sets, replace the Q5 brake pressure modulator.
   If the DTC does not set
   4.3. All OK.
   If the DTC does not set
5. All OK.

Repair Instructions

Perform the Diagnostic Repair Verification after completing the repair.

- Vehicle Yaw Sensor with Vehicle Lateral and Longitudinal Accelerometer Replacement
- Electronic Brake Control Module with Brake Pressure Modulator Valve Replacement
- Control Module References for electronic brake control module replacement, programming and setup

&#169© Copyright Chevrolet. All rights reserved

DTC C0256, C12E6, or C12E7

Diagnostic Instructions

- Perform the Diagnostic System Check - Vehicle prior to using this diagnostic procedure.
- Review Strategy Based Diagnosis for an overview of the diagnostic approach.
- Diagnostic Procedure Instructions provides an overview of each diagnostic category.

DTC Descriptors

DTC C0256 04: Valve Relay Primary Circuit Open

DTC C12E6 00: ABS Switch Circuit Open

DTC C0256 0E: Valve Relay Primary Circuit Low Resistance

DTC C12E7 00: ABS Switch Circuit Shorted

Diagnostic Fault Information

Circuit	Short to Ground	Open/High Resistance	Short to Voltage	Signal Performance
B+	C0256 04, C12E5 00	C0256 04, C12E5 00	--	--
Ground Terminal 13	-	C056D 00, C12DA 00, C12D7 00	--	--
Ground Terminal 38	-	U0129 00, U1833 00	--	--

Circuit/System Description

Battery positive voltage is supplied to the electronic brake control module at all times through a 60 A fuse located in the under-bonnet fuse block. The electronic brake control module uses this voltage to power the pump motor. The pump motor is an integral part of the brake pressure modulator, while the pump motor relay is integral to the electronic brake control module. The pump motor relay is not engaged during normal system operation. When the antilock brake system or traction control system operation is required the electronic brake control module activates the pump motor relay and turns the pump motor ON.

Conditions for Running the DTC

- Vehicle ON or Vehicle in Service Mode.
- The ignition voltage is greater than 10 V.

Conditions for Setting the DTC

C0256 04 or C12E6 00

- The electronic brake control module detects an open in the B+ circuit.
- The engine control module detects the antilock brake system switch circuit is open.

C0256 0E or C12E7 00

- The electronic brake control module detects an internal power switch shorted.
- The engine control module detects the antilock brake system switch circuit is shorted.

Action Taken When the DTC Sets

- The ABS indicator turns ON.
- The red brake indicator turns ON.
- The traction control/stability control indicator turns ON.
- The Service Brake Assist and Service StabiliTrak messages are displayed on the driver information centre.
- The electronic brake control module disables the antilock brake system, the traction control system and the electronic stability program for the duration of the drive cycle.

Conditions for Clearing the DTC

- The condition for setting the DTC is no longer present.
- The history DTC will clear after 40 consecutive fault-free drive cycles have occurred.

Reference Information

Schematic Reference

Antilock Brake System Schematics

Connector End View Reference

Component Connector End Views

Description and Operation

ABS Description and Operation

Electrical Information Reference

- Circuit Testing
- Connector Repairs
- Testing for Intermittent Conditions and Poor Connections
- Wiring Repairs

Scan Tool Reference

Control Module References for scan tool information

Circuit/System Testing

1. Vehicle OFF and all vehicle systems OFF, disconnect the harness connector at the K17 electronic brake control module. It may take up to 2 minutes for all vehicle systems to power down.
2. Test for less than 10 Ω between each ground circuit terminal listed below and ground:
   - Terminal 13
   - Terminal 38

   If 10 Ω or greater

   2.1. Vehicle OFF.
   2.2. Test for less than 2 Ω in the ground circuit end to end.
   If 2 Ω or greater, repair the open/high resistance in the circuit.
   If less than 2 Ω, repair the open/high resistance in the ground connection.

   If less than 10 Ω
3. Vehicle in Service Mode.
4. Verify a test lamp illuminates between the B+ circuit terminal 1 and ground.

   If the test lamp does not illuminate and the circuit fuse is good

   4.1. Vehicle OFF.
   4.2. Test for less than 2 Ω in the B+ circuit end to end.
   If 2 Ω or greater, repair the open/high resistance in the circuit.
   If less than 2 Ω, verify the fuse is not open and there is voltage at the fuse.

   If the test lamp does not illuminate and the circuit fuse is open

4.1. Vehicle OFF.
4.2. Test for infinite resistance between the B+ circuit and ground.
If less than infinite resistance, repair the short to ground on the circuit.
If infinite resistance, replace the Q5 brake pressure modulator.

If the test lamp illuminates

5. Replace the K17 electronic brake control module.
6. Verify the DTC does not set while operating the vehicle under the Conditions for Running the DTC.

If the DTC sets

Replace the Q5 brake pressure modulator.

If the DTC does not set

7. All OK.

Repair Instructions

Perform the Diagnostic Repair Verification after completing the repair.

- Electronic Brake Control Module with Brake Pressure Modulator Valve Replacement
- Control Module References for electronic brake control module replacement, programming and setup

&#169© Copyright Chevrolet. All rights reserved

DTC C0294, C120C, or C12F8

Diagnostic Instructions

- Perform the Diagnostic System Check - Vehicle prior to using this diagnostic procedure.
- Review Strategy Based Diagnosis for an overview of the diagnostic approach.
- Diagnostic Procedure Instructions provides an overview of each diagnostic category.

DTC Descriptors

DTC C0294 00: Brake Switch and Brake Pedal Position Sensor Correlation Malfunction

DTC C120C 00: Brake Pedal Position Sensor 4 Plausibility

DTC C12F8 00: Brake Pedal Position Sensor 3 Plausibility

Diagnostic Fault Information

Circuit	Short to Ground	Open/High Resistance	Short to Voltage	Signal Performance
5 V Reference	C0110 00, C0880 00, C0880 02, C029C 5A, C120F 00, C12E0. 00, C12E5 00	C0110 00, C029C 03, C129A 00, C029 07, C029C 5A, C129E 00, C12E0 00	C0110 00, C0880 00, C029C 5A, C12E0 00, C12E5 00	C12B1 00, C12F8 00
Brake Control Brake Pedal Position Sensor Circuit 1 Terminal 4	C029C 03, C129A 00	C029C 03, C129A.00	C0110 00, C0880 00, C029C 5A, C12E0 00, C12E5 00	C12B1 00, C12F8 00
Brake Control Brake Pedal Position Sensor Circuit 2 Terminal 6	C029C 03, C129D 00	C0110 00, C029C 07, C129E 00, C12E0 00	C0110 00, C029C 07, C129E 00, C12E0 00	C12B1 00, C12F8 00
Low Reference	-	C0110 00, C0294 00, C029C 07, C029C 5A, C129E 00, C12E0 00, C12F8 00	-	C12B1 00, C12F8 00

Circuit/System Description

The electronic brake control module uses input from the brake control brake pedal position sensor and the brake pedal position sensor to determine when the brake pedal is being applied and with how much force. These inputs are used to determine the driver's braking intent which is used to control the amount of pressure applied to the wheels.

Conditions for Running the DTC

- Ignition voltage is greater than 10 V.
- Vehicle ON or Vehicle in Service Mode.

Conditions for Setting the DTC

- The electronic brake control module detects an open in the low reference circuit.
- The electronic brake control module detects that the two signal circuits do not match each other.

Action Taken When the DTC Sets

- The ABS indicator turns ON.
- The red brake indicator turns ON.
- The traction control/stability control indicator turns ON.
- The Service Brake Assist and Service StabiliTrak messages are displayed on the driver information centre.
- The electronic brake control module disables the antilock brake system, the dynamic rear proportioning, the traction control system and the electronic stability control for the duration of the drive cycle.

Conditions for Clearing the DTC

- The condition for setting the DTC is no longer present.
- The history DTC will clear after 40 consecutive fault-free drive cycles have occurred.

Reference Information

Schematic Reference

Antilock Brake System Schematics

Connector End View Reference

Component Connector End Views

Description and Operation

ABS Description and Operation

Electrical Information Reference

- Circuit Testing
- Connector Repairs
- Testing for Intermittent Conditions and Poor Connections
- Wiring Repairs

Scan Tool Reference

Control Module References for scan tool information

Circuit/System Verification

Note: The 12 V battery must be able to maintain a charge during this brake sensor performance procedure. It is recommended that a charger/maintainer or equivalent be used to maintain proper battery voltage during this procedure.

1. Vehicle in Service Mode with the transmission in PARK.

   Note: Do not depress the brake pedal during the Electronic Brake Control Module Learn.

2. Perform the Electronic Brake Control Module Learn procedure with a scan tool.

   Note: To ensure the complete brake modulator and high pressure accumulator pressure relief procedure is allowed to occur; the brake controller must see 1 pedal apply with the propulsion system enabled, followed by a proper shutdown without applying the brake pedal.

3. Vehicle ON, apply and release the brake pedal.

   Note: Vehicle OFF, without applying the brake pedal ensure the brake modulator and high pressure accumulator pressure relief occurs. This process will take approximately 1-3 minutes.

4. Vehicle OFF, without applying the brake pedal,
5. Remove the remote keyless entry transmitter and close all of the vehicle doors. Wait approximately 1-3 minutes until the brake modulator and the high pressure accumulator pressure relief is complete and the vehicle powers down.
6. Vehicle ON, brakes not applied.
7. Verify the scan tool parameters listed below are within the specified range:
   - Brake Controls Brake Pedal Position Sensor 5 V Supply Voltage - Between 4.75-5.25 V.
   - Brake Controls Brake Pedal Position Sensor Circuit 1 - Between 1.4-1.7 V

     Brake Controls Brake Pedal Position Sensor Circuit 2 - Between 58 78%

-

If any parameter is not within the specified range

Refer to Circuit/System Testing.

If all parameters are within the specified range

8. Vehicle ON, brakes not applied.
9. Verify the scan tool parameters listed below are less the specified range:
   - Brake Master Cylinder Pressure Sensor - Less than 100 kPa (15 psi)
   - Brake Pressure Sensor - Less than 100 kPa (15 psi)
   - High Pressure Accumulator Sensor - Less than 800 kPa (116 psi)

   If any parameter is greater than the specified range

   Replace the Q5 brake pressure modulator.

   If all parameters are less than the specified range
10. Perform a brake hydraulic system test, refer to Brake Hydraulic and Assist System Diagnosis .

    If the brake hydraulic system test does not pass

    Repair as necessary.

    If the brake hydraulic system tests normal
11. Replace the Q5 brake pressure modulator.
12. Verify the DTC does not set while operating the vehicle under the Conditions for Running the DTC.

    If the DTC sets

    K17 electronic brake control module.

    If the DTC does not set
13. All OK.

Circuit/System Testing

1. Perform the brake hydraulic check, refer to Brake Hydraulic and Assist System Diagnosis .
2. Vehicle OFF, disconnect the harness connector at the B201 brake control brake pedal position sensor.
3. Test for less than 5 Ω between the low reference circuit terminal 1 and ground.

   If 5 Ω or greater

   3.1. Vehicle OFF, disconnect the harness connector at the K17 electronic brake control module.

   3.2. Test for less than 2 Ω in the low reference circuit end to end.

   If 2 Ω or greater, repair the open/high resistance in the circuit.

   If less than 2 Ω, replace the K17 electronic brake control module.

   If less than 5 Ω
4. Vehicle in Service Mode.
5. Test for 4.8-5.2 V between the 5 V reference circuit terminal 5 and ground.

   If less than 4.8 V

5.1. Ignition OFF, disconnect the harness connector at the K17 electronic brake control module.
5.2. Test for infinite resistance between the 5 V reference circuit and ground.
If less than infinite resistance, repair the short to ground on the circuit.
If infinite resistance
5.3. Test for less than 2 Ω in the 5 V reference circuit end to end.
If 2 Ω or greater, repair the open/high resistance in the circuit.
If less than 2 Ω, replace the K17 electronic brake control module.

If greater than 5.2 V

5.1. Vehicle OFF, disconnect the harness connector at the K17 electronic brake control module, vehicle in service mode.
5.2. Test for less than 1 V between the 5 V reference circuit and ground.
If 1 V or greater, repair the short to voltage on the circuit.
If less than 1 V, replace the K17 electronic brake control module.

If between 4.8-5.2 V

6. Verify the scan tool Brake Controls Brake Pedal Position Sensor Circuit 1 parameter is less than 1 V.

If 1 V or greater

6.1. Vehicle OFF, disconnect the harness connector at the K17 electronic brake control module, vehicle in service mode.
6.2. Test for less than 1 V between the signal circuit terminal 4 and ground.
If 1 V or greater, repair the short to voltage on the circuit.
If less than 1 V, replace the K17 electronic brake control module.

If less than 1 V

7. Install a 3 A fused jumper wire between the signal circuit terminal 4 and the 5 V reference circuit terminal 5.
8. Verify the scan tool Brake Controls Brake Pedal Position Sensor Circuit 1 parameter is greater than 4.5 V.

If 4.5 V or less

8.1. Vehicle OFF, disconnect the harness connector at the K17 electronic brake control module.
8.2. Test for infinite resistance between the signal circuit terminal 4 and ground.
If less than infinite resistance, repair the short to ground on the circuit.
If infinite resistance
8.3. Test for less than 2 Ω in the signal circuit end to end.
If 2 Ω or greater, repair the open/high resistance in the circuit.
If less than 2 Ω, replace the K17 electronic brake control module.

If greater than 4.5 V

9. Verify the scan tool Brake Controls Brake Pedal Position Sensor Circuit 2 parameter is greater than 80%.

If 80% or less

9.1. Vehicle OFF, disconnect the harness connector at the K17 electronic brake control module.
9.2. Test for infinite resistance between the signal circuit terminal 6 and ground.
If less than infinite resistance, repair the short to ground on the circuit.
If infinite resistance, replace the K17 electronic brake control module.

If greater than 80%

10. Install a 3 A fused jumper wire between the signal circuit terminal 6 and the low reference circuit terminal 1.
11. Verify the scan tool Brake Controls Brake Pedal Position Sensor Circuit 2 is less than 10%.

    If 10% or greater

    11.1. Vehicle OFF, disconnect the harness connector at the K17 electronic brake control module, vehicle in service mode.
    11.2. Test for less than 1 V between the signal circuit terminal 6 and ground.
        If 1 V or greater, repair the short to voltage on the circuit.
        If less than 1 V
    11.3. Vehicle OFF.
    11.4. Test for less than 2 Ω in the signal circuit end to end.
        If 2 Ω or greater, repair the open/high resistance in the circuit.
        If less than 2 Ω, replace the K17 electronic brake control module.

    If less than 10%

12. Replace the B201 brake control brake pedal position sensor.

Repair Instructions

Perform the Diagnostic Repair Verification after completing the repair.

- Electronic Brake Control Position Sensor Replacement
- Control Module References for electronic brake control module replacement, programming and setup

&#169© Copyright Chevrolet. All rights reserved

DTC C0299 or C12FF

Diagnostic Instructions

- Perform the Diagnostic System Check - Vehicle prior to using this diagnostic procedure.
- Review Strategy Based Diagnosis for an overview of the diagnostic approach.
- Diagnostic Procedure Instructions provides an overview of each diagnostic category.

DTC Descriptors

DTC C0299 00: Brake Booster Performance Malfunction

DTC C12FF 00: Electronic Brake Control Module Non-Volatile RAM Malfunction

DTC C0299 31: Brake Booster Performance Internal Checksum Error

Circuit/System Description

The electronic brake control module uses inputs from the brake master cylinder piston position sensor and the brake pedal position sensor to determine when the brake pedal is being applied and with how much force. These inputs determine the driver's braking intent which is used to control the amount of pressure applied to the wheels.

Conditions for Running the DTC

- Vehicle ON or Vehicle in Service Mode.
- The ignition voltage is greater than 10 V.

Conditions for Setting the DTC

- The brake pedal is sensed as applied for 6 minutes.
- The vehicle speed is greater than 21 km/h (13 mph).

Action Taken When the DTC Sets

- The ABS indicator turns ON.
- The red brake indicator turns ON.
- The traction control/stability control indicator turns ON.
- The Service Brake Assist and Service StabiliTrak messages are displayed on the driver information centre.
- The electronic brake control module disables the antilock brake system, the dynamic rear proportioning, the traction control system and the electronic stability control for the duration of the drive cycle.

Conditions for Clearing the DTC

- The condition for setting the DTC is no longer present.
- The history DTC will clear after 40 consecutive fault-free drive cycles have occurred.

Reference Information

Schematic Reference

Antilock Brake System Schematics

Connector End View Reference

Component Connector End Views

Description and Operation

ABS Description and Operation

Electrical Information Reference

- Circuit Testing
- Connector Repairs
- Testing for Intermittent Conditions and Poor Connections
- Wiring Repairs

Scan Tool Reference

Control Module References for scan tool information

Circuit/System Verification

Note: The 12 V battery must be able to maintain a charge during this brake sensor performance procedure. It is recommended that a charger/maintainer or equivalent be used to maintain proper battery voltage during this procedure.

1. Vehicle in Service Mode.
2. Place the transmission in PARK.

   Note: Do not depress the brake pedal during the Electronic Brake Control Module Learn.

3. Perform the Electronic Brake Control Module Learn procedure with a scan tool.

   Note: To ensure the complete brake modulator and high pressure accumulator pressure relief procedure is allowed to occur; the brake controller must see 1 pedal apply with the propulsion system enabled, followed by a proper shutdown without applying the brake pedal.

4. Vehicle ON, apply and release the brake pedal.

   Note: Vehicle OFF, without applying the brake pedal ensure the brake modulator and high pressure accumulator pressure relief occurs. This process will take approximately 1-3 minutes.

5. Vehicle OFF, without applying the brake pedal, remove the remote keyless entry transmitter and close all of the vehicle doors.
6. Wait approximately 1-3 minutes until the brake modulator and the high pressure accumulator pressure relief is complete and the vehicle powers down. Vehicle ON, brakes not applied
7. Verify the scan tool parameters listed below are within the specified range:
   - Brake Controls Brake Pedal Position Sensor 5 V Supply Voltage - Between 4.75-5.25 V.
   - Brake Controls Brake Pedal Position Sensor Circuit 1 - Between 1.4-1.7 V
   - Brake Controls Brake Pedal Position Sensor Circuit 2 - Between 58 78%

   If any parameter is not within the specified range

   Refer to DTC C029C, C120C, C129A-C129F, C12B1, or C12F8 .

   If all parameters are within the specified range
8. Vehicle ON, brakes not applied.
9. Verify the scan tool parameters listed below are less the specified range:
   - Brake Master Cylinder Pressure Sensor - Less than 100 kPa (15 psi)
   - Brake Pressure Sensor - Less than 100 kPa (15 psi)
   - High Pressure Accumulator Sensor - Less than 800 kPa (116 psi)

   If any parameter is greater than the specified range

   Replace the Q5 brake pressure modulator.

   If all parameters are less than the specified range
10. Perform a brake hydraulic check, refer to Brake Hydraulic and Assist System Diagnosis .

    If the brake hydraulic system test does not pass

    Repair as necessary.

If all parameters are less than the specified range

11. Replace the Q5 brake pressure modulator.
12. Verify the DTC does not set while operating the vehicle under the Conditions for Running the DTC.

    If the DTC sets

    Replace the K17 electronic brake control module.

    If the DTC does not set

13. All OK.

Repair Instructions

Perform the Diagnostic Repair Verification after completing the repair.

- Electronic Brake Control Module with Brake Pressure Modulator Valve Replacement
- Control Module References for electronic brake control module replacement, programming and setup

&#169© Copyright Chevrolet. All rights reserved

DTC C029C, C120C, C129A-C129F, C12B1, or C12F8

Diagnostic Instructions

- Perform the Diagnostic System Check - Vehicle prior to using this diagnostic procedure.
- Review Strategy Based Diagnosis for an overview of the diagnostic approach.
- Diagnostic Procedure Instructions provides an overview of each diagnostic category.

DTC Descriptors

DTC C029C 00: Brake Control Brake Pedal Position Sensor Circuit

DTC C029C 03: Brake Control Brake Pedal Position Sensor Circuit Low Voltage

DTC C129A 00: Brake Pedal Position Sensor 3 Circuit Low Input

DTC C129D 00: Brake Pedal Position Sensor 4 Circuit Low Input

DTC C029C 07: Brake Control Brake Pedal Position Sensor Circuit High Voltage

DTC C129B 00: Brake Pedal Position Sensor 3 Circuit High Input

DTC C129E 00: Brake Pedal Position Sensor 4 Circuit High Input

DTC C029C 1A: Brake Control Brake Pedal Position Sensor Circuit Performance Bias Level Out of Range

DTC C129C 00: Brake Pedal Position Sensor 3 Circuit Calibration

DTC C129F 00: Brake Pedal Position Sensor 4 Circuit Calibration

DTC C029C 5A: Brake Control Brake Pedal Position Sensor Circuit Not Plausible

DTC C12B1 00: ABS Master Cylinder Pressure Sensor and Brake Pedal Position Sensor Not Plausible

DTC C12F8 00: Brake Pedal Position Sensor 3 Not Plausible

DTC C120C 00: Brake Pedal Position Sensor 4 Not Plausible

Diagnostic Fault Information

Circuit	Short to Ground	Open/High Resistance	Short to Voltage	Signal Performance
5 V Reference	C0110 00, C0880 00, C0880 02, C029C 5A, C120F 00, C12E0. 00, C12E5 00	C0110 00, C029C 03, C129A 00, C029C 07, C029C 5A, C129E 00, C12E0 00	C0110 00, C0880 00, C029C 5A, C12E0 00, C12E5 00	C12B1 00, C12F8 00
Brake Control Brake Pedal Position Sensor Circuit 1 Terminal 4	C029C 03, C129A 00	C029C 03, C129A.00	C0110 00, C0880 00, C029C 5A, C12E0 00, C12E5 00	C12B1 00, C12F8 00
Brake Control Brake Pedal Position Sensor Circuit 2 Terminal 6	C029C 03, C129D 00	C0110 00, C029C 07, C129E 00, C12E0 00	C0110 00, C029C 07, C129E 00, C12E0 00	C12B1 00, C12F8 00
Low Reference	-	C0110 00, C0294 00, C029C 07, C029C 5A, C129E 00, C12E0 00, C12F8 00	-	C12B1 00, C12F8 00

Circuit/System Description

The electronic brake control module uses inputs from the electronic brake control brake pedal position sensor to determine when the brake is applied and how much force is used. The electronic brake control module monitors when the drivers foot is on the brake and locks the offset. The offset is locked when 3 out of the 4 inputs indicate the brake pedal is applied. The 4 inputs are brake pedal travel 1, brake pedal travel 2, master cylinder pressure sensor, and the brake pedal position sensor. These inputs are used to determine the driver's braking intent which is used to the control amount of pressure applied to the wheels.

Conditions for Running the DTC

- Vehicle in Service Mode.
- Ignition voltage is greater than 10 V.

Conditions for Setting the DTC

C029C 00

- The electronic brake control module detects improper offset learn.
- Foot on brake pedal during the electronic brake control module learn procedure.
- The brake pedal position sensor voltage is out of range.

C029C 03, C129A 00, or C129D 00

The electronic brake control module detects voltage below threshold on signal circuit.

C029C 07, C129B 00, or C129E 00

The electronic brake control module detects voltage above threshold on signal circuit.

C029C 1A, C129C 00, or C129F 00

The electronic brake control pedal position sensor learn procedure has not been performed.

C029C 5A, C12B1 00, C12F8 00, or C120C 00

- The electronic brake control module detects the brake pressure is high when the electronic brake control pedal position sensor is reading low travel.
- The electronic brake control module detects the brake pressure is low when the electronic brake control pedal position sensor is reading high travel.

Action Taken When the DTC Sets

- The ABS indicator turns ON.
- The red brake indicator turns ON.
- The traction control/stability control indicator turns ON.
- The Service Brake Assist and Service StabiliTrak messages are displayed on the driver information centre.
- The electronic brake control module disables the antilock brake system, the traction control system and the electronic stability program for the duration of the drive cycle.

Conditions for Clearing the DTC

- The condition for setting he DTC is no longer present.
- The history DTC will clear after 40 consecutive fault-free drive cycles have occurred.

Reference Information

Schematic Reference

Antilock Brake System Schematics

Connector End View Reference

Component Connector End Views

Description and Operation

ABS Description and Operation

Electrical Information Reference

- Circuit Testing
- Connector Repairs
- Testing for Intermittent Conditions and Poor Connections
- Wiring Repairs

Scan Tool Reference

Control Module References for scan tool information

Circuit/System Verification

Note: The 12 V battery must be able to maintain a charge during this brake sensor performance procedure. It is recommended that a charger/maintainer or equivalent be used to maintain proper battery voltage during this procedure.

1. Vehicle in Service Mode with the transmission in PARK.

   Note: Do not depress the brake pedal during the Electronic Brake Control Module Learn.

2. Perform the Electronic Brake Control Module Learn procedure with a scan tool.

   Note: To ensure the complete brake modulator and high pressure accumulator pressure relief procedure is allowed to occur; the brake controller must see 1 pedal apply with the propulsion system enabled, followed by a proper shutdown without applying the brake pedal.

3. Vehicle ON, apply and release the brake pedal.

   Note: Vehicle OFF, without applying the brake pedal ensure the brake modulator and high pressure accumulator pressure relief occurs. This process will take approximately 1-3 minutes.

4. Vehicle OFF, without applying the brake pedal.
5. Remove the remote keyless entry transmitter and close all of the vehicle doors. Wait approximately 1-3 minutes until the brake modulator and the high pressure accumulator pressure relief is complete and the vehicle powers down.
6. Vehicle ON, brakes not applied.
7. Verify the scan tool parameters listed below are within the specified range:

- Brake Controls Brake Pedal Position Sensor 5 V Supply Voltage - Between 4.75-5.25 V.
- Brake Controls Brake Pedal Position Sensor Circuit 1 - Between 1.4-1.7 V
- Brake Controls Brake Pedal Position Sensor Circuit 2 - Between 58 78%

If any parameter is not within the specified range

Refer to Circuit/System Testing.

If all parameters are within the specified range

8. Vehicle ON, brakes not applied.
9. Verify the scan tool parameters listed below are less the specified range:
   - Brake Master Cylinder Pressure Sensor - Less than 100 kPa (15 psi)
   - Brake Pressure Sensor - Less than 100 kPa (15 psi)
   - High Pressure Accumulator Sensor - Less than 800 kPa (116 psi)

   If any parameter is greater than the specified range

   Replace the Q5 brake pressure modulator.

   If all parameters are less than the specified range
10. Perform a brake hydraulic system test, refer to Brake Hydraulic and Assist System Diagnosis .

    If the brake hydraulic system test does not pass

    Repair as necessary.

    If the brake hydraulic system tests normal
11. Replace the Q5 brake pressure modulator.
12. Verify the DTC does not set while operating the vehicle under the Conditions for Running the DTC.

    If the DTC sets

    Replace the K17 electronic brake control module.

    If the DTC does not set
13. All OK.

Circuit/System Testing

1. Perform the brake hydraulic check, refer to Brake Hydraulic and Assist System Diagnosis .
2. Vehicle OFF, disconnect the harness connector at the B201 brake control brake pedal position sensor.
3. Test for less than 5 Ω between the low reference circuit terminal 1 and ground.

   If 5 Ω or greater

   3.1. Vehicle OFF, disconnect the harness connector at the K17 electronic brake control module.

   3.2. Test for less than 2 Ω in the low reference circuit end to end.

   If 2 Ω or greater, repair the open/high resistance in the circuit.

   If less than 2 Ω, replace the K17 electronic brake control module.

   If less than 5 Ω
4. Vehicle in Service Mode.

5. Test for 4.8-5.2 V between the 5 V reference circuit terminal 5 and ground.

If less than 4.8 V

5.1. Vehicle OFF, disconnect the harness connector at the K17 electronic brake control module.

5.2. Test for infinite resistance between the 5 V reference circuit and ground.

If less than infinite resistance, repair the short to ground on the circuit.

If infinite resistance

5.3. Test for less than 2 Ω in the 5 V reference circuit end to end.

If 2 Ω or greater, repair the open/high resistance in the circuit.

If less than 2 Ω, replace the K17 electronic brake control module.

If greater than 5.2 V

5.1. Vehicle OFF, disconnect the harness connector at the K17 electronic brake control module, vehicle in service mode.

5.2. Test for less than 1 V between the 5 V reference circuit and ground.

If 1 V or greater, repair the short to voltage on the circuit.

If less than 1 V, replace the K17 electronic brake control module.

If between 4.8-5.2 V

6. Verify the scan tool Brake Controls Brake Pedal Position Sensor Circuit 1 parameter is less than 1 V.

If 1 V or greater

6.1. Vehicle OFF, disconnect the harness connector at the K17 electronic brake control module, vehicle in service mode.

6.2. Test for less than 1 V between the signal circuit terminal 4 and ground.

If 1 V or greater, repair the short to voltage on the circuit.

If less than 1 V, replace the K17 electronic brake control module.

If less than 1 V

7. Install a 3 A fused jumper wire between the signal circuit terminal 4 and the 5 V reference circuit terminal 5.
8. Verify the scan tool Brake Controls Brake Pedal Position Sensor Circuit 1 parameter is greater than 4.5 V.

If 4.5 V or less

8.1. Vehicle OFF, disconnect the harness connector at the K17 electronic brake control module.

8.2. Test for infinite resistance between the signal circuit terminal 4 and ground.

If less than infinite resistance, repair the short to ground on the circuit.

If infinite resistance

8.3. Test for less than 2 Ω in the signal circuit end to end.

If 2 Ω or greater, repair the open/high resistance in the circuit.

If less than 2 Ω, replace the K17 electronic brake control module.

If greater than 4.5 V

9. Verify the scan tool Brake Controls Brake Pedal Position Sensor Circuit 2 parameter is greater than 80%.

If 80% or less

9.1. Vehicle OFF, disconnect the harness connector at the K17 electronic brake control module.

9.2. Test for infinite resistance between the signal circuit terminal 6 and ground.

If less than infinite resistance, repair the short to ground on the circuit.

If infinite resistance, replace the K17 electronic brake control module.

If greater than 80%

10. Install a 3 A fused jumper wire between the signal circuit terminal 6 and the low reference circuit terminal 1.
11. Verify the scan tool Brake Controls Brake Pedal Position Sensor Circuit 2 is less than 10%.

    If 10% or greater

    11.1. Vehicle OFF, disconnect the harness connector at the K17 electronic brake control module, vehicle in service mode.

    11.2. Test for less than 1 V between the signal circuit terminal 6 and ground.

    If 1 V or greater, repair the short to voltage on the circuit.

    If less than 1 V

    11.3. Vehicle OFF.

    11.4. Test for less than 2 Ω in the signal circuit end to end.

    If 2 Ω or greater, repair the open/high resistance in the circuit.

    If less than 2 Ω, replace the K17 electronic brake control module.

    If less than 10%

12. Replace the B201 brake control brake pedal position sensor.

Repair Instructions

Perform the Diagnostic Repair Verification after completing the repair.

- Electronic Brake Control Position Sensor Replacement
- Electronic Brake Control Module with Brake Pressure Modulator Valve Replacement
- Control Module References for electronic brake control module replacement, programming and setup

&#169© Copyright Chevrolet. All rights reserved

DTC C0552

Diagnostic Instructions

- Perform the Diagnostic System Check - Vehicle prior to using this diagnostic procedure.
- Review Strategy Based Diagnosis for an overview of the diagnostic approach.
- Diagnostic Procedure Instructions provide an overview of each diagnostic category.

DTC Descriptor

DTC C0552 00: Improper Shutdown Malfunction

Circuit/System Description

The electronic brake control module monitors the number of Vehicle in Service Mode and Vehicle OFF cycles. When it detects that a Vehicle OFF cycle was incomplete or nonexistent this fault will set. This means the fault reports a problem that occurred at the end of the previous ignition cycle. If this occurs during an electronic brake control module service operation, any calibrations or offsets learned during that service operation may not be properly stored in memory.

Conditions for Running the DTC

- Vehicle ON or Vehicle in Service Mode.
- The ignition voltage is greater than 10 V.
- The electronic brake control module is initialising.

Conditions for Setting the DTC

A Vehicle OFF cycle was interrupted before completion. Or power was removed from the module; with the Vehicle ON, the vehicle moving, and the brake applied.

Action Taken When the DTC Sets

- The electronic brake control module disables the antilock brake system, traction control and the vehicle stability enhancement system for the duration of the drive cycle.
- A driver information centre message and/or a warning indicator may be displayed.

Conditions for Clearing the DTC

- The condition for the DTC is no longer present.
- The electronic brake control module clears the history DTC when a current DTC is not detected in 40 consecutive drive cycles.

Diagnostic Aids

This DTC can set if battery voltage drops below 8 V with the Vehicle ON or Vehicle in Service Mode.

Reference Information

Schematic Reference

Antilock Brake System Schematics

Connector End View Reference

Component Connector End Views

Description and Operation

ABS Description and Operation

Electrical Information Reference

- Circuit Testing
- Connector Repairs
- Testing for Intermittent Conditions and Poor Connections
- Wiring Repairs

Scan Tool Reference

Control Module References for scan tool information

Circuit/System Testing

1. Vehicle OFF and all vehicle systems OFF, disconnect the harness connector at the K17 Electronic Brake Control Module. It may take up to 2 min for all vehicle systems to power down.

2. Test for less than 10 Ω between the ground circuit terminals listed below and ground:
   - Terminal 13
   - Terminal 38

   If 10 Ω or greater

   2.1. Vehicle OFF.
   2.2. Test for less than 2 Ω in the ground circuit end to end.
   If 2 Ω or greater, repair the open/high resistance in the circuit.
   If less than 2 Ω, repair the open/high resistance in the ground connection.

   If less than 10 Ω
3. Vehicle in Service Mode.
4. Verify that a test lamp illuminates between the B+ circuit terminal 1 and ground.

   If the test lamp does not illuminate and the circuit fuse is good

   4.1. Vehicle OFF.
   4.2. Test for less than 2 Ω in the B+ circuit end to end.
   If 2 Ω or greater, repair the open/high resistance or the short to ground in the circuit.
   If less than 2 Ω, verify the fuse is not open and there is voltage at the fuse.

   If the test lamp illuminates
5. Cycle the Vehicle OFF then to Vehicle in Service Mode.
6. Verify DTC C0552 or C121D is not set.

   If the DTC sets

   Replace the K17 Electronic Brake Control Module.

   If the DTC does not set
7. All OK.

Repair Instructions

Perform the Diagnostic Repair Verification after completing the repair.

Control Module References for electronic brake control module replacement, programming and setup

&#169© Copyright Chevrolet. All rights reserved

DTC C0561

Diagnostic Instructions

- Perform the Diagnostic System Check - Vehicle prior to using this diagnostic procedure.
- Review Strategy Based Diagnosis for an overview of the diagnostic approach.
- Diagnostic Procedure Instructions provides an overview of each diagnostic category.

DTC Descriptors

DTC C0561 4B: System Disabled Information Stored Calibration Not Learned

DTC C0561 54: System Disabled Information Stored High Temperature

Circuit/System Description

The electronic brake control module receives data from other modules; engine control module, body control module, 14 V accessory power module, hybrid powertrain control module 1, and hybrid powertrain control module 2. The multi-axis acceleration sensor and the steering wheel angle sensor are needed to perform brake control functions. The module must ensure that all serial data and sensor inputs are properly received and learned.

Conditions for Running the DTC

- Ignition voltage is greater than 10 V.
- Vehicle ON or Vehicle in Service Mode.

Conditions for Setting the DTC

DTC C0561 4B

- Air in the hydraulic brake system or incorrect brake bleed.
- This diagnostics detects if one or more of the module learning steps was not performed or failed during a new component replacement or with a reprogrammed module.

DTC C0561 54

This diagnostics detects an over temperature condition with one of the twelve solenoids due to an extended antilock brake system, traction control and the vehicle stability enhancement system event lasting more than 45 seconds.

Action Taken When the DTC Sets

- The ABS indicator turns ON.
- The red brake indicator turns ON.
- The traction control/stability control indicator turns ON.
- The Service Brake Assist and Service StabiliTrak messages are displayed on the driver information centre.
- The electronic brake control module disables the antilock brake system, the dynamic rear proportioning, the traction control system and the electronic stability program for the duration of the drive cycle.

Conditions for Clearing the DTC

- It may take two Vehicle ON cycles to clear this DTC.
- The condition for setting the DTC is no longer present.
- The history DTC will clear after 40 consecutive fault-free drive cycles have occurred.

Diagnostic Aids

DTC C0561 4B

- This DTC may set during a battery disconnect.
- Check for hydraulic leaks, air in the brake system or incorrect brake bleed.
- The module set up was not performed after a programming event or the electronic brake control module learn failed.

DTC C0561 54

Excessive traction control event for greater than 45 seconds.

Reference Information

Schematic Reference

Antilock Brake System Schematics

Connector End View Reference

Component Connector End Views

Description and Operation

ABS Description and Operation

Electrical Information Reference

- Circuit Testing
- Connector Repairs
- Testing for Intermittent Conditions and Poor Connections
- Wiring Repairs

Scan Tool Reference

Control Module References for scan tool information

Circuit/System Verification

DTC C0561 4B

Note: The 12 V battery must be able to maintain a charge during this brake sensor performance procedure. It is recommended that a charger/maintainer or equivalent be used to maintain proper battery voltage during this procedure.

1. Vehicle in Service Mode with the transmission in PARK.

   Note: Do not depress the brake pedal during the Electronic Brake Control Module Learn procedure.

2. Perform the Electronic Brake Control Module Learn procedure with a scan tool.

   Note: To ensure the complete brake modulator and high pressure accumulator pressure relief procedure is allowed to occur; the brake controller must see 1 pedal apply with the propulsion system enabled, followed by a proper shutdown without applying the brake pedal.

3. Vehicle ON, apply and release the brake pedal.

   Note: Vehicle OFF, without applying the brake pedal ensure the brake modulator and high pressure accumulator pressure relief occurs. This process will take approximately 1-3 minutes.

4. Vehicle OFF, without applying the brake pedal.

5. Remove the remote keyless entry transmitter and close all of the vehicle doors. Wait approximately 1-3 minutes until the brake modulator and the high pressure accumulator pressure relief is complete and the vehicle powers down.
6. Vehicle ON, brakes not applied.
7. Verify the scan tool parameters listed below are within the specified range:
   - Brake Controls Brake Pedal Position Sensor 5 V Supply Voltage - Between 4.75-5.25 V
   - Brake Controls Brake Pedal Position Sensor Circuit 1 - Between 1.4-1.7 V
   - Brake Controls Brake Pedal Position Sensor Circuit 2 - Between 58-78%

   If any parameter is not within the specified range

   Refer to DTC C029C, C120C, C129A-C129F, C12B1, or C12F8 .

   If all parameters are within the specified range
8. Vehicle ON, brakes not applied.
9. Verify the scan tool parameters listed below are less the specified range:
   - Brake Master Cylinder Pressure Sensor - Less than 100 kPa (15 psi)
   - Brake Pressure Sensor - Less than 100 kPa (15 psi)
   - High Pressure Accumulator Sensor - Less than 800 kPa (116 psi)

   If any parameter is greater than the specified range

   Replace the Q5 brake pressure modulator.

   If all parameters are less than the specified range
10. Perform a brake hydraulic system test, refer to Brake Hydraulic and Assist System Diagnosis .

    If the brake hydraulic system test does not pass

    Repair as necessary.

    If the brake hydraulic system tests normal
11. Replace the Q5 brake pressure modulator.
12. Verify the DTC does not set while operating the vehicle under the Conditions for Running the DTC.

    If the DTC sets

    Replace the K17 electronic brake control module.

    If the DTC does not set
13. All OK.

DTC C0561 54

Note: This diagnostic detects an over temperature condition with 1 of the 12 solenoids due to an extended anti lock, traction control and the vehicle stability enhancement system event lasting more than 45 seconds. This does not indicate a failure with the electronic brake control module.

1. Verify DTC C0561 54 does not set while operating the vehicle under normal driving conditions.

   If the DTC sets

   Replace the K17 electronic brake control module.

If the DTC does not set

2. All OK.

Repair Instructions

Perform the Diagnostic Repair Verification after completing the repair.

- Electronic Brake Control Module with Brake Pressure Modulator Valve Replacement
- Control Module References for electronic brake control module replacement, programming and setup

&#169© Copyright Chevrolet. All rights reserved

DTC C056D, C121C-C121F, C123A-C1256, C126E-C127D, C12C2-C12DF, or C12F2-C12F6

Diagnostic Instructions

- Perform the Diagnostic System Check - Vehicle prior to using this diagnostic procedure.
- Review Strategy Based Diagnosis for an overview of the diagnostic approach.
- Diagnostic Procedure Instructions provide an overview of each diagnostic category.

DTC Descriptors

DTC C056D 00: Electronic Control Unit Hardware Performance Malfunction

DTC C056D 3C: Electronic Control Unit Hardware Performance Internal Communication Malfunction

DTC C121C 00: Electronic Brake Control Module Internal Communication Malfunction

DTC C121D 00: Electronic Brake Control Module Internal Malfunction

DTC C121E 00: Electronic Brake Control Module Malfunction

DTC C121F 00: Electronic Brake Control Module Supervision Software Malfunction

DTC C123A 00: Electronic Brake Control Module RAM Watchdog

DTC C123B 00: Electronic Brake Control Module RAM Program Overflow

DTC C123C 00: Electronic Brake Control Module RAM Malfunction

DTC C123D 00: Electronic Brake Control Module Solenoid Valve Timeout

DTC C123E 00: Electronic Brake Control Module RAM Periodic Interrupt

DTC C123F 00: Electronic Brake Control Module Serial Peripheral Interface Malfunction

DTC C1255 00: Electronic Control Unit Performance

DTC C1256 00: Control Module Programming Checksum Error

DTC C126E 00: Electronic Brake Control Module Supervision Software Malfunction

DTC C126F 00: Electronic Brake Control Module Serial Peripheral Interface Performance

DTC C127A 00: Electronic Brake Control Module RAM Performance

DTC C127B 00: Electronic Brake Control Module Processor Performance

DTC C127C 00: Electronic Brake Control Module Self-Test Malfunction

DTC C127D 00: Electronic Brake Control Module Internal Malfunction

DTC C12C2 00: ABS Left Front Isolation Solenoid Valve Driver Shorted

DTC C12C5 00: ABS Right Front Dump Solenoid Valve Driver Shorted

DTC C12CC 00: ABS Left Front Dump Solenoid Valve Driver Shorted

DTC C12CF 00: ABS Right Front Dump Solenoid Valve Driver Shorted

DTC C12D0 00: ABS Left Rear Dump Solenoid Valve Circuit Open

DTC C12D1 00: ABS Left Rear Dump Solenoid Valve Circuit Shorted

DTC C12D2 00: ABS Left Rear Dump Solenoid Valve Driver Shorted

DTC C12D3 00: ABS Right Rear Dump Solenoid Valve Circuit Open

DTC C12D4 00: ABS Right Rear Dump Solenoid Valve Circuit Shorted

DTC C12D5 00: ABS Right Rear Dump Solenoid Valve Driver Shorted

DTC C12D6 00: ABS Normally Open Base Brake Solenoid Valve Circuit Open

DTC C12D7 00: ABS Normally Open Base Brake Solenoid Valve Circuit Shorted

DTC C12D8 00: ABS Normally Closed Base Brake Solenoid Valve Driver Shorted

DTC C12D9 00: ABS Normally Closed Base Brake Solenoid Valve Circuit Open

DTC C12DA 00: ABS Normally Closed Base Brake Solenoid Valve Circuit Open

DTC C12DB 00: ABS Normally Closed Base Brake Solenoid Valve Driver Shorted

DTC C12DF 00: Dynamic Rear Proportioning Solenoid Valve Driver Shorted

DTC C12F2 00: ABS Left Rear Isolation Solenoid Valve Circuit Shorted

DTC C12F3 00: ABS Left Rear Isolation Solenoid Valve Performance

DTC C12F4 00: Dynamic Rear Proportioning Solenoid Valve Performance

DTC C12F5 00: ABS Right Rear Isolation Solenoid Valve Circuit Shorted

DTC C12F6 00: ABS Right Rear Isolation Solenoid Valve Performance

Diagnostic Fault Information

Circuit	Short to Ground	Open/High Resistance	Short to Voltage	Signal Performance
B+ Terminal 1	C0256 04, C12E5 00	C0256 04, C12E5 00	--	--
B+ Terminal 25	C0201 04	C0201 04	--	--
Ground Terminal 13	-	C056D 00, C12DA 00, C12D7 00	--	--
Ground Terminal 38	-	U0129 00, U1833 00	--	--

Circuit/System Description

The electronic brake control module detects an internal malfunction.

Conditions for Running the DTC

- Vehicle ON or Vehicle in Service Mode.
- Ignition voltage is between 8-16 V.

Conditions for Setting the DTC

- An open electronic brake control module ground circuit.
- The electronic brake control module detects an internal malfunction.

Action Taken When the DTC Sets

- A driver information centre message and/or a warning indicator may be displayed.
- The electronic brake control module disables the antilock brake system, traction control and the vehicle stability enhancement system for the duration of the ignition cycle.

Conditions for Clearing the DTC

- The condition for the DTC is no longer present.
- The electronic brake control module clears the history DTC when a current DTC is not detected in 40 consecutive drive cycles.

Reference Information

Schematic Reference

Antilock Brake System Schematics

Connector End View Reference

Component Connector End Views

Description and Operation

ABS Description and Operation

Electrical Information Reference

- Circuit Testing
- Connector Repairs
- Testing for Intermittent Conditions and Poor Connections
- Wiring Repairs

Scan Tool Reference

Control Module References for scan tool information

Circuit/System Testing

1. Vehicle OFF and all vehicle systems OFF, disconnect the harness connector at the K17 Electronic Brake Control Module. It may take up to 2 min for all vehicle systems to power down.
2. Test for less than 10 Ω between the ground circuit terminals listed below and ground:
   - Terminal 13
   - Terminal 38

   If 10 Ω or greater

   2.1. Vehicle OFF.

   2.2. Test for less than 2 Ω in the ground circuit end to end.

   If 2 Ω or greater, repair the open/high resistance in the circuit.

   If less than 2 Ω, repair the open/high resistance in the ground connection.

   If less than 10 Ω
3. Vehicle in Service Mode.
4. Verify that a test lamp illuminates between the B+ circuit terminals listed below and ground.
   - Terminal 1
   - Terminal 25

   If the test lamp does not illuminate and the circuit fuse is good

   4.1. Vehicle OFF.

   4.2. Test for less than 2 Ω in the B+ circuit end to end.

   If 2 Ω or greater, repair the open/high resistance or the short to ground in the circuit.

   If less than 2 Ω, verify the fuse is not open and there is voltage at the fuse.

   If the test lamp illuminates

   Replace the K17 Electronic Brake Control Module.

Repair Instructions

Perform the Diagnostic Repair Verification after completing the repair.

Control Module References for electronic brake control module replacement, programming and setup

&#169© Copyright Chevrolet. All rights reserved

DTC C0574

Diagnostic Instructions

- Perform the Diagnostic System Check - Vehicle prior to using this diagnostic procedure.
- Review Strategy Based Diagnosis for an overview of the diagnostic approach.
- Diagnostic Procedure Instructions provides an overview of each diagnostic category.

DTC Descriptors

DTC C0574 08: Printed Circuit Board Temperature Sensor Performance - Signal Invalid

DTC C0574 11: Printed Circuit Board Temperature Sensor High Input

Circuit/System Description

The electronic brake control module monitors the internal temperature sensor.

Conditions for Running the DTC

- Vehicle ON or Vehicle in Service Mode.
- The ignition voltage is greater than 10 V.

Conditions for Setting the DTC

C0574 08

The electronic brake control module detects an internal temperature sensor failure.

C0574 11

The temperature sensor value is greater than 284° F for greater than 1 second.

Action Taken When the DTC Sets

No indicators or warning messages are displayed.

Conditions for Clearing the DTC

- The condition for setting the DTC is no longer present.
- The history DTC will clear after 40 consecutive fault-free drive cycles have occurred.

Reference Information

Schematic Reference

Antilock Brake System Schematics

Connector End View Reference

Component Connector End Views

Description and Operation

ABS Description and Operation

Electrical Information Reference

- Circuit Testing
- Connector Repairs
- Testing for Intermittent Conditions and Poor Connections
- Wiring Repairs

Scan Tool Reference

Control Module References for scan tool information

Circuit/System Verification

Note: Diagnose all other electronic brake control module system related faults first, if DTC C0574 goes into history after a 15 minute cool down period. Other electronic brake control module faults may cause the circuit board to overheat.

1. Vehicle in Service Mode.
2. Verify DTC C0574 is not set.
   If the DTC is set
   Replace the K17 electronic brake control module.
   If the DTC is not set
3. All OK.

Repair Instructions

Perform the Diagnostic Repair Verification after completing the repair.

Control Module References for electronic brake control module replacement, programming and setup

&#169© Copyright Chevrolet. All rights reserved

DTC C0710

Diagnostic Instructions

- Perform the Diagnostic System Check - Vehicle prior to using this diagnostic procedure.
- Review Strategy Based Diagnosis for an overview of the diagnostic approach.
- Diagnostic Procedure Instructions provides an overview of each diagnostic category.

DTC Descriptor

DTC C0710 00: Steering Position Signal Malfunction

DTC C0710 09: Steering Position Signal Too Fast Transitions

DTC C0710 0A: Steering Position Signal Too Slow Transitions

DTC C0710 11: Steering Position Signal High Input

DTC C0710 18: Steering Position Signal Low Signal Amplitude

DTC C0710 19: Steering Position Signal High Signal Amplitude

DTC C0710 4B: Steering Position Signal Calibration Not Learned

Diagnostic Fault Information

Circuit	Short to Ground	Open/High Resistance	Short to Voltage	Signal Performance
Ignition	U0125, U0126	U0125, U0126	--	--
Ground	--	U0126	--	--

Circuit/System Description

The steering wheel angle sensor receives ignition voltage from the electronic brake control module. The electronic brake control module receives serial data message inputs from the steering wheel angle sensor identifying the position and direction of the steering wheel rotation. The electronic brake control module utilises this signal to calculate the driver intended driving direction.

Conditions for Running the DTC

- Vehicle ON.
- Vehicle speed is greater than 15 km/h (10 MPH).

Conditions for Setting the DTC

C0710 00 or C0710 11

- The steering wheel angle sensor fails internally.
- The steering wheel alignment may be out of the specified range.
- The steering wheel angle sensor may not be properly mounted.

C0710 09

The steering wheel angle sensor detects an error of 30° or more.

C0710 0A

The steering wheel angle sensor signal does not vary.

C0710 18

The steering wheel angle sensor signal has a low amplitude signal.

C0710 19

The steering wheel angle sensor signal has a high amplitude signal or greater value than physically possible.

C0710 4B

The steering wheel angle sensor is not calibrated or learned.

Action Taken When the DTC Sets

- The traction control/stability control-active indicator turns ON.
- The electronic brake control module disables the traction control and the vehicle stability control for the duration of the ignition cycle.

Conditions for Clearing the DTC

- In order for the DTC to clear the electronic stability control system must be initialised. Perform the steps listed below to initialise the system:
  1. Vehicle OFF, open the driver door and remove all keyless entry transmitters from the vehicle and secure in a place outside the vehicle.
  2. Close the driver door and let the vehicle sit for 3 minutes.
  3. Vehicle ON, leave the vehicle in Park for greater than 10 seconds.
  4. Drive the vehicle in a straight line at a speed greater than 32 km/h (20 mph) for 30 seconds.
- The condition for setting the DTC is no longer present.
- The history DTC will clear after 40 consecutive fault-free drive cycles have occurred.

Diagnostic Aids

- Confirm that all tyres are of the proper size and that all are matching brands. Check and adjust all tyres to the stated cold air pressure as identified on the tyre placard. If a mis-sized or non-matching brand tyre is present, inform the customer that in order for the vehicle stability enhanced system to function normally, tyres need to be a uniform size and rolling diameter.
- The car should not pull in either direction causing the steering wheel to be off centre while driving in a straight line on a level surface.
- Improperly mounted or loose sensor.

Reference Information

Schematic Reference

Antilock Brake System Schematics

Connector End View Reference

Component Connector End Views

Description and Operation

ABS Description and Operation

Electrical Information Reference

- Circuit Testing

- Connector Repairs
- Testing for Intermittent Conditions and Poor Connections
- Wiring Repairs

Scan Tool Reference

Control Module References for scan tool information

Circuit/System Verification

1. Vehicle in Service Mode.
2. Verify none of the DTCs listed below are set:
   - DTC U0125
   - DTC U0126
   - DTC C0035
   - DTC C0040
   - DTC C0045
   - DTC C0050

   If any of the DTCs are set

   Refer to Diagnostic Trouble Code (DTC) List - Vehicle .

   If none of the DTCs are set
3. Verify that DTC C0186, C0196, or C0287 is not set.

   If any of the DTCs are set

   Refer to DTC C0186, C0196, or C0287 .

   If none of the DTCs are set
4. Verify that DTC C0710 4B is not set.

   If DTC C0710 4B is set

   Perform the Steering Angle Sensor Centring procedure.

   If DTC C0710 4B is not set
5. Verify the B99 steering wheel angle sensor is installed correctly.

   If loose or incorrect installation

   Correct the installation of the component.

   If installed correctly
6. Refer to Circuit/System Testing.

Circuit/System Testing

1. Vehicle OFF and all vehicle systems OFF, disconnect the harness connector at the B99 steering wheel angle sensor. It may take up to 2 minutes for all vehicle systems to power down.
2. Test for less than 10 Ω between the ground circuit terminal 6 and ground.
   If 10 Ω or greater
   2.1. Vehicle OFF.
   2.2. Test for less than 2 Ω in the ground circuit end to end.
   If 2 Ω or greater, repair the open/high resistance in the circuit.
   If less than 2 Ω, repair the open/high resistance in the ground connection.
   If less than 10 Ω
3. Vehicle in Service Mode.
4. Verify a test lamp illuminates between the ignition circuit terminal 5 and ground.
   If the test lamp does not illuminate
   4.1. Vehicle OFF, disconnect the harness connector at the K17 electronic brake control module.
   4.2. Test for infinite resistance between the ignition circuit and ground.
   If less than infinite resistance, repair the short to ground on the circuit.
   If infinite resistance
   4.3. Test for less than 2 Ω in the ignition circuit end to end.
   If 2 Ω or greater, repair the open/high resistance in the circuit.
   If less than 2 Ω, replace the K17 electronic brake control module.
   If the test lamp illuminates
5. Replace the B99 steering wheel angle sensor.
6. Verify that DTC C0710 does not set while operating the vehicle under the Conditions for Running the DTC.
   If the DTC sets
   Replace the K17 electronic brake control module.
   If the DTC does not set
7. All OK.

Repair Instructions

Perform the Diagnostic Repair Verification after completing the repair.

- Steering Angle Sensor Replacement
- Control Module References for electronic brake control module replacement, programming and setup

&#169© Copyright Chevrolet. All rights reserved

DTC C0870 or C12E4

Diagnostic Instructions

- Perform the Diagnostic System Check - Vehicle prior to using this diagnostic procedure.
- Review Strategy Based Diagnosis for an overview of the diagnostic approach.
- Diagnostic Procedure Instructions provides an overview of each diagnostic category.

DTC Descriptors

DTC C0870 00: Control Module Voltage Reference Output 1 Circuit Malfunction

DTC C12E4 00: ABS Sensor Reference Output Circuit

Circuit/System Description

The electronic brake control module supplies a shared 5 V reference to multiple sensors.

Conditions for Running the DTC

- Vehicle ON or Vehicle in Service Mode.
- The ignition voltage is greater than 10 V.

Conditions for Setting the DTC

The electronic brake control module detects an internal 5 V supply failure.

Action Taken When the DTC Sets

- The ABS indicator turns ON.
- The red brake indicator turns ON.
- The traction control/stability control indicator turns ON.

- The Service Brake Assist and Service StabiliTrak messages are displayed on the driver information centre.
- The electronic brake control module disables the antilock brake system, the traction control system and the electronic stability program for the duration of the drive cycle.

Conditions for Clearing the DTC

- The condition for setting the DTC is no longer present.
- The history DTC will clear after 40 consecutive fault-free drive cycles have occurred.

Reference Information

Schematic Reference

Antilock Brake System Schematics

Connector End View Reference

Component Connector End Views

Description and Operation

ABS Description and Operation

Electrical Information Reference

- Circuit Testing
- Connector Repairs
- Testing for Intermittent Conditions and Poor Connections
- Wiring Repairs

Scan Tool Reference

Control Module References for scan tool information

Circuit/System Verification

1. Vehicle in Service Mode.
2. Verify that DTC C0870 or C12E4 is not set.
   If either DTC is set
   Replace the K17 electronic brake control module.

If either DTC is not set

3. All OK.

Repair Instructions

Perform the Diagnostic Repair Verification after completing the repair.

Control Module References for electronic brake control module replacement, programming and setup

&#169© Copyright Chevrolet. All rights reserved

DTC C0880, C12E5, or C120F

Diagnostic Instructions

- Perform the Diagnostic System Check - Vehicle prior to using this diagnostic procedure.
- Review Strategy Based Diagnosis for an overview of the diagnostic approach.
- Diagnostic Procedure Instructions provides an overview of each diagnostic category.

DTC Descriptors

DTC C0880 00: Control Module Voltage Reference Output 2 Circuit Malfunction

DTC C12E5 00: Brake Pedal Position Sensor Reference Circuit

DTC C0880 02: Control Module Voltage Reference Output 2 Circuit Short to Ground

DTC C120F 00: Brake Pedal Position Sensor Supply Circuit Low Input

Diagnostic Fault Information

Circuit	Short to Ground	Open/High Resistance	Short to Voltage	Signal Performance
5 V Reference	C0110 00, C0880 00, C0880 02, C029C 5A, C120F 00, C12E0. 00, C12E5 00	C0110 00,C029C 03, C029C 07, C029C 5A, C129A 00, C129E 00, C12E0 00	C0110 00, C0880 00, C029C 5A, C12E0 00, C12E5 00	C12B1 00, C12F8 00
Brake Pedal Travel Sensor 1 Signal Terminal 4	C029C 03, C129A 00	C0110 00, C0294 00, C029C 03, C029C 5A, C129A.00, C12E0 00, C12F8 00	C0110 00, C0880 00, C029C 5A, C12E0 00, C12E5 00	C12B1 00, C12F8 00
Brake Pedal Travel Sensor 2 Signal Terminal 6	C029C 03, C129D 00	C0110 00, C029C 07, C129E 00, C12E0 00	C0110 00, C029C 07, C129E 00, C12E0 00	C12B1 00, C12F8 00
Low Reference	-	C0110 00, C0294 00, C029C 07, C029C 5A, C129E 00, C12E0 00, C12F8 00	-	C12B1 00, C12F8 00

Circuit/System Description

The electronic brake control module supplies a 5 V reference to the brake control brake pedal position sensor.

Conditions for Running the DTC

- Vehicle ON or Vehicle in Service Mode.
- The ignition voltage is greater than 10 V.

Conditions for Setting the DTC

- A short to ground or a short to voltage on the 5 V reference circuit to the brake control brake pedal position sensor.
- A short to voltage on the sensor 1 signal circuit to the brake control brake pedal position sensor.

Action Taken When the DTC Sets

- The ABS indicator turns ON.
- The red brake indicator turns ON.
- The traction control/stability control indicator turns ON.
- The Service Brake Assist and Service StabiliTrak messages are displayed on the driver information centre.
- The electronic brake control module disables the antilock brake system, the traction control system and the electronic stability program for the duration of the drive cycle.

Conditions for Clearing the DTC

- The condition for setting the DTC is no longer present.
- The history DTC will clear after 40 consecutive fault-free drive cycles have occurred.

Reference Information

Schematic Reference

Antilock Brake System Schematics

Connector End View Reference

Component Connector End Views

Description and Operation

ABS Description and Operation

Electrical Information Reference

- Circuit Testing
- Connector Repairs
- Testing for Intermittent Conditions and Poor Connections
- Wiring Repairs

Scan Tool Reference

Control Module References for scan tool information

Circuit/System Testing

1. Vehicle in Service Mode.
2. Verify that DTC C029C is not set.
   If the DTC is set
   Refer to DTC C029C, C120C, C129A-C129F, C12B1, or C12F8 .
   If the DTC is not set
3. Vehicle OFF, disconnect the harness connector at the B201 brake control brake pedal position sensor.
4. Test for less than 5 Ω between the low reference circuit terminal 1 and ground.
   If 5 Ω or greater
   4.1. Vehicle OFF, disconnect the harness connector at the K17 electronic brake control module.
   4.2. Test for less than 2 Ω in the low reference circuit end to end.
   If 2 Ω or greater, repair the open/high resistance in the circuit.
   If less than 2 Ω, replace the K17 electronic brake control module.
   If less than 5 Ω
5. Vehicle in Service Mode.
6. Test for 4.8-5.2 V between the 5 V reference circuit terminal 5 and ground.
   If less than 4.8 V
   6.1. Vehicle OFF, disconnect the harness connector at the K17 electronic brake control module.
   6.2. Test for infinite resistance between the 5 V reference circuit and ground.
   If less than infinite resistance, repair the short to ground on the circuit.
   If infinite resistance
   6.3. Test for less than 2 Ω in the 5 V reference circuit end to end.
   If 2 Ω or greater, repair the open/high resistance in the circuit.
   If less than 2 Ω, replace the K17 electronic brake control module.
   If greater than 5.2 V

6.1. Vehicle OFF, disconnect the harness connector at the K17 electronic brake control module, vehicle in service mode.
6.2. Test for less than 1 V between the 5 V reference circuit and ground.
If 1 V or greater, repair the short to voltage on the circuit.
If less than 1 V, replace the K17 electronic brake control module.

If between 4.8-5.2 V

7. Verify the scan tool Brake Controls Brake Pedal Position Sensor Circuit 1 parameter is less than 1 V.

If 1 V or greater

7.1. Vehicle OFF, disconnect the harness connector at the K17 electronic brake control module, vehicle in service mode.
7.2. Test for less than 1 V between the signal circuit terminal 4 and ground.
If 1 V or greater, repair the short to voltage on the circuit.
If less than 1 V, replace the K17 electronic brake control module.

If less than 1 V

8. Install a 3 A fused jumper wire between the signal circuit terminal 4 and the 5 V reference circuit terminal 5.
9. Verify the scan tool Brake Controls Brake Pedal Position Sensor Circuit 1 parameter is greater than 4.5 V.

If 4.5 V or less

9.1. Vehicle OFF, disconnect the harness connector at the K17 electronic brake control module.
9.2. Test for infinite resistance between the signal circuit terminal 4 and ground.
If less than infinite resistance, repair the short to ground on the circuit.
If infinite resistance
9.3. Test for less than 2 Ω in the signal circuit end to end.
If 2 Ω or greater, repair the open/high resistance in the circuit.
If less than 2 Ω, replace the K17 electronic brake control module.

If greater than 4.5 V

10. Verify the scan tool Brake Controls Brake Pedal Position Sensor Circuit 2 parameter is greater than 80%.

If 80% or less

10.1. Vehicle OFF, disconnect the harness connector at the K17 electronic brake control module.
10.2. Test for infinite resistance between the signal circuit terminal 6 and ground.
If less than infinite resistance, repair the short to ground on the circuit.
If infinite resistance, replace the K17 electronic brake control module.

If greater than 80%

11. Install a 3 A fused jumper wire between the signal circuit terminal 6 and the low reference circuit terminal 1.
12. Verify the scan tool Brake Controls Brake Pedal Position Sensor Circuit 2 is less than 10%.

If 10% or greater

12.1. Vehicle OFF, disconnect the harness connector at the K17 electronic brake control module, vehicle in service mode.
12.2. Test for less than 1 V between the signal circuit terminal 6 and ground.
If 1 V or greater, repair the short to voltage on the circuit.
If less than 1 V

12.3. Vehicle OFF.
12.4. Test for less than 2 Ω in the signal circuit end to end.
If 2 Ω or greater, repair the open/high resistance in the circuit.
If less than 2 Ω, replace the K17 electronic brake control module.

If less than 10%

13. Replace the B201 brake control brake pedal position sensor.

Repair Instructions

Perform the Diagnostic Repair Verification after completing the repair.

- Electronic Brake Control Position Sensor Replacement
- Control Module References for electronic brake control module replacement, programming and setup

&#169© Copyright Chevrolet. All rights reserved

DTC C0898

Diagnostic Instructions

- Perform the Diagnostic System Check - Vehicle prior to using this diagnostic procedure.
- Review Strategy Based Diagnosis for an overview of the diagnostic approach.
- Diagnostic Procedure Instructions provides an overview of each diagnostic category.

DTC Descriptors

DTC C0898 00: Control Module Power and Ground Circuits Malfunction

DTC C0898 03: Control Module Power and Ground Circuits Low Voltage

Circuit/System Description

The electronic brake control module monitors two different blocks of memory to determine its capability to control the system shutdown process.

Conditions for Running the DTC

Vehicle ON or Vehicle in Service Mode.

Conditions for Setting the DTC

- Keep alive voltage regulator not functional.
- Processor loses complete power (Ignition and Battery).
- Battery voltage is under 9 V and the vehicle is not moving.

Action Taken When the DTC Sets

- The electronic brake control module disables the antilock brake system/traction control system/vehicle stability enhancement system for the duration of the drive cycle.
- A driver information centre message and/or a warning indicator may be displayed.

Conditions for Clearing the DTC

- The condition for setting the DTC is no longer present.
- The electronic brake control module clears the history DTC when a current DTC is not detected in 40 consecutive drive cycles.

Reference Information

Schematic Reference

Antilock Brake System Schematics

Connector End View Reference

Component Connector End Views

Description and Operation

ABS Description and Operation

Electrical Information Reference

- Circuit Testing
- Connector Repairs
- Testing for Intermittent Conditions and Poor Connections
- Wiring Repairs

Scan Tool Reference

Control Module References for scan tool information

Circuit/System Verification

Check to ensure battery shunt is not opened.

Circuit/System Testing

1. Vehicle OFF and all vehicle systems OFF, disconnect the harness connector at the K17 Electronic Brake Control Module. It may take up to 2 min for all vehicle systems to power down.

2. Test for less than 10 Ω between the ground circuit terminals listed below and ground:
   - Terminal 13
   - Terminal 38

   If 10 Ω or greater

   2.1. Vehicle OFF.
   2.2. Test for less than 2 Ω in the ground circuit end to end.
   If 2 Ω or greater, repair the open/high resistance in the circuit.
   If less than 2 Ω, repair the open/high resistance in the ground connection.

   If less than 10 Ω
3. Vehicle in Service Mode.
4. Verify that a test lamp illuminates between the B+ circuit terminals listed below and ground.
   - Terminal 1
   - Terminal 25

   If the test lamp does not illuminate and the circuit fuse is good

   4.1. Vehicle OFF.
   4.2. Test for less than 2 Ω in the B+ circuit end to end.
   If 2 Ω or greater, repair the open/high resistance or the short to ground in the circuit.
   If less than 2 Ω, verify the fuse is not open and there is voltage at the fuse.
   If the test lamp illuminates
5. Vehicle in Service Mode.
6. Verify that a test lamp illuminates between the ignition circuit terminal 14 and ground.
   If the test lamp does not illuminate and the circuit fuse is good

   6.1. Vehicle OFF.
   6.2. Test for less than 2 Ω in the ignition circuit end to end.
   If 2 Ω or greater, repair the open/high resistance or the short to ground in the circuit.
   If less than 2 Ω, verify the fuse is not open and there is voltage at the fuse.
   If the test lamp illuminates
7. Replace the K17 Electronic Brake Control Module.

Repair Instructions

Perform the Diagnostic Repair Verification after completing the repair.

Control Module References for electronic brake control module replacement, programming and setup

&#169© Copyright Chevrolet. All rights reserved

DTC C0914

Diagnostic Instructions

- Perform the Diagnostic System Check - Vehicle prior to using this diagnostic procedure.
- Review Strategy Based Diagnosis for an overview of the diagnostic approach.
- Diagnostic Procedure Instructions provides an overview of each diagnostic category.

DTC Descriptor

DTC C0914 06: Control Module Voltage Output 1 Circuit Low Voltage/Open

Diagnostic Fault Information

Circuit	Short to Ground	Open/High Resistance	Short to Voltage	Signal Performance
Ignition Voltage	U0125 00, U0126 00, C0914 06	U0125 00, U0126 00, C0914 06	--	--
Ground	--	U0125 00	--	--

Conditions for Running the DTC

- Vehicle ON or Vehicle in Service Mode.
- The ignition voltage is greater than 10 V.

Conditions for Setting the DTC

The electronic brake control module has detected a short to ground or open on the yaw and lateral accelerometer sensor ignition circuit.

Action Taken When the DTC Sets

- The electronic brake control module disables the traction control and the vehicle stability enhancement system for the duration of the ignition cycle.
- A driver information centre message and/or a warning indicator may be displayed.

Conditions for Clearing the DTC

- The condition for the DTC is no longer present.
- The electronic brake control module clears the history DTC when a current DTC is not detected in 40 consecutive drive cycles.

Reference Information

Schematic Reference

Antilock Brake System Schematics

Connector End View Reference

Component Connector End Views

Description and Operation

ABS Description and Operation

Electrical Information Reference

- Circuit Testing
- Connector Repairs
- Testing for Intermittent Conditions and Poor Connections
- Wiring Repairs

Scan Tool Reference

Control Module References for scan tool information.

Circuit/System Testing

1. Vehicle OFF and all vehicle systems OFF, disconnect the harness connector at the B119 Multi-axis Acceleration Sensor. It may take up to 2 min for all vehicle systems to power down.
2. Test for less than 10 Ω between the ground circuit terminal 6 and ground.
   If 10 Ω or greater
   2.1. Vehicle OFF.
   2.2. Test for less than 2 Ω in the ground circuit end to end.

If 2 Ω or greater, repair the open/high resistance in the circuit.

If less than 2 Ω, repair the open/high resistance in the ground connection.

If less than 10 Ω

3. Vehicle in Service Mode.
4. Verify that a test lamp illuminates between the ignition circuit terminal 5 and ground.

   If the test lamp does not illuminate

   4.1. Vehicle OFF, disconnect the harness connector at the K17 Electronic Brake Control Module.

   4.2. Test for less than 2 Ω in the ignition circuit end to end.

   If 2 Ω or greater, repair the open/high resistance or the short to ground in the circuit.

   If less than 2 Ω, replace the K17 Electronic Brake Control Module.

   If the test lamp illuminates

5. Replace the B119 Multi-axis Acceleration Sensor. Verify the DTC does not set.

   If the DTC sets

   Replace the K17 Electronic Brake Control Module

   If the DTC does not set

6. All OK.

Repair Instructions

Perform the Diagnostic Repair Verification after completing the repair.

- Vehicle Yaw Sensor with Vehicle Lateral and Longitudinal Accelerometer Replacement
- Control Module References for electronic brake control module replacement, programming and setup

&#169© Copyright Chevrolet. All rights reserved

DTC C1120 or C1121

Diagnostic Instructions

- Perform the Diagnostic System Check - Vehicle prior to using this diagnostic procedure.
- Review Strategy Based Diagnosis for an overview of the diagnostic approach.
- Diagnostic Procedure Instructions provides an overview of each diagnostic category.

DTC Descriptors

DTC C1120 00: ABS Left Front Hydraulic Circuit Blocked

DTC C1121 00: ABS Left Front Hydraulic Circuit Leak Detected

Circuit/System Description

The electronic brake control module activates the valve relay to supply voltage to the valve solenoids. This voltage is referred to as the system voltage. The electronic brake control module activates individual valve solenoids by grounding the valve solenoid control circuits. This verification is used to perform hydraulic checks at the normally open base brake valve, the front hydraulic circuit and the block.

Conditions for Running the DTC

- Vehicle ON or Vehicle in Service Mode.
- Accumulator pressure is less than 9,000 kPa (1,305 psi).
- The ignition voltage is greater than 10 V.
- The electronic brake control module performs a hydraulic system check every third drive cycle.
- Brake pedal was depressed.

Conditions for Setting the DTC

C1120 00

This diagnostic detects if the left front circuit is blocked by actively applying pressure and monitoring the accumulator pressure change. The pressure change of the accumulator indicates the value of fluid used which is then compared to expected fluid used during a brake apply. Too little fluid usage indicates a blocked circuit.

C1121 00

This diagnostic detects if the left front circuit is leaking by actively applying pressure and monitoring the accumulator pressure change. The pressure change of the accumulator indicates the volume of fluid used which is then compared to expected fluid used during a brake apply. Too much fluid usage indicated a leaking circuit.

Action Taken When the DTC Sets

- The ABS indicator turns ON.
- The red brake indicator turns ON.
- The traction control/stability control indicator turns ON.
- The Service Brake Assist and Service StabiliTrak messages are displayed on the driver information centre.
- The electronic brake control module disables the antilock brake system, the traction control system and the electronic stability program for the duration of the drive cycle.

Conditions for Clearing the DTC

- The condition for setting the DTC is no longer present.
- The history DTC will clear after 40 consecutive fault-free drive cycles have occurred.

Reference Information

Schematic Reference

Antilock Brake System Schematics

Connector End View Reference

Component Connector End Views

Description and Operation

ABS Description and Operation

Electrical Information Reference

- Circuit Testing
- Connector Repairs

- Testing for Intermittent Conditions and Poor Connections
- Wiring Repairs

Scan Tool Reference

Control Module References for scan tool information

Circuit/System Verification

Note: The 12 V battery must be able to maintain a charge during this brake sensor performance procedure. It is recommended that a charger/maintainer or equivalent be used to maintain proper battery voltage during this procedure.

1. Vehicle in Service Mode with the transmission in PARK.

   Note: Do not depress the brake pedal during the Electronic Brake Control Module Learn procedure.

2. Perform the Electronic Brake Control Module Learn procedure with a scan tool.

   Note: To ensure the complete brake modulator and high pressure accumulator pressure relief procedure is allowed to occur; the brake controller must see 1 pedal apply with the propulsion system enabled, followed by a proper shutdown without applying the brake pedal.

3. Vehicle ON, apply and release the brake pedal.

   Note: Vehicle OFF, without applying the brake pedal ensure the brake modulator and high pressure accumulator pressure relief occurs. This process will take approximately 1-3 minutes.

4. Vehicle OFF, without applying the brake pedal.
5. Remove the remote keyless entry transmitter and close all of the vehicle doors. Wait approximately 1-3 minutes until the brake modulator and the high pressure accumulator pressure relief is complete and the vehicle powers down.
6. Vehicle ON, brakes not applied.
7. Verify the scan tool parameters listed below are within the specified range:
   - Brake Controls Brake Pedal Position Sensor 5 V Supply Voltage - Between 4.75-5.25 V
   - Brake Controls Brake Pedal Position Sensor Circuit 1 - Between 1.4-1.7 V
   - Brake Controls Brake Pedal Position Sensor Circuit 2 - Between 58-78%

   If any parameter is not within the specified range

   Refer to DTC C029C, C120C, C129A-C129F, C12B1, or C12F8 .

   If all parameters are within the specified range
8. Vehicle ON, brakes not applied.
9. Verify the scan tool parameters listed below are less the specified range:
   - Brake Master Cylinder Pressure Sensor - Less than 100 kPa (15 psi)

- Brake Pressure Sensor - Less than 100 kPa (15 psi)
- High Pressure Accumulator Sensor - Less than 800 kPa (116 psi)

If any parameter is greater than the specified range

Replace the Q5 brake pressure modulator.

If all parameters are less than the specified range

10. Perform a brake hydraulic system test, refer to Brake Hydraulic and Assist System Diagnosis .

If the brake hydraulic system test does not pass

Repair as necessary.

If the brake hydraulic system tests normal

11. Replace the Q5 brake pressure modulator.
12. Verify the DTC does not set while operating the vehicle under the Conditions for Running the DTC.

If the DTC sets

Replace the K17 electronic brake control module.

If the DTC does not set

13. All OK.

Repair Instructions

Perform the Diagnostic Repair Verification after completing the repair.

- Electronic Brake Control Module with Brake Pressure Modulator Valve Replacement
- Control Module References for electronic brake control module replacement, programming and setup

&#169© Copyright Chevrolet. All rights reserved

DTC C1122 or C1123

Diagnostic Instructions

- Perform the Diagnostic System Check - Vehicle prior to using this diagnostic procedure.
- Review Strategy Based Diagnosis for an overview of the diagnostic approach.
- Diagnostic Procedure Instructions provides an overview of each diagnostic category.

DTC Descriptors

DTC C1122 00: ABS Right Front Hydraulic Circuit Blocked

DTC C1123 00: ABS Right Front Hydraulic Circuit Leak Detected

Circuit/System Description

The electronic brake control module activates the valve relay to supply voltage to the valve solenoids. This voltage is referred to as the system voltage. The electronic brake control module activates individual valve solenoids by grounding the valve solenoid control circuits. This verification is used to perform hydraulic checks at the normally open base brake valve, the front hydraulic circuit and the block.

Conditions for Running the DTC

- Vehicle ON or Vehicle in Service Mode
- Accumulator pressure is less than 9,000 kPa (1,305 psi).
- The ignition voltage is greater than 10 V.
- The electronic brake control module performs a hydraulic system check every third drive cycle.
- Brake pedal was depressed.

Conditions for Setting the DTC

C1122 00

This diagnostic detects if the left front circuit is blocked by actively applying pressure and monitoring the accumulator pressure change. The pressure change of the accumulator indicates the value of fluid used which is then compared to expected fluid used during a brake apply. Too little fluid usage indicates a blocked circuit.

C1123 00

This diagnostic detects if the left front circuit is leaking by actively applying pressure and monitoring the accumulator pressure change. The pressure change of the accumulator indicates the volume of fluid used which is then compared to expected fluid used during a brake apply. Too much fluid usage indicated a leaking circuit.

Action Taken When the DTC Sets

- The ABS indicator turns ON.
- The red brake indicator turns ON.
- The traction control/stability control indicator turns ON.
- The Service Brake Assist and Service StabiliTrak messages are displayed on the driver information centre.
- The electronic brake control module disables the antilock brake system, the traction control system and the electronic stability program for the duration of the drive cycle.

Conditions for Clearing the DTC

- The condition for setting the DTC is no longer present.
- The history DTC will clear after 40 consecutive fault-free drive cycles have occurred.

Reference Information

Schematic Reference

Antilock Brake System Schematics

Connector End View Reference

Component Connector End Views

Description and Operation

ABS Description and Operation

Electrical Information Reference

- Circuit Testing
- Connector Repairs

- Testing for Intermittent Conditions and Poor Connections
- Wiring Repairs

Scan Tool Reference

Control Module References for scan tool information

Circuit/System Verification

Note: The 12 V battery must be able to maintain a charge during this brake sensor performance procedure. It is recommended that a charger/maintainer or equivalent be used to maintain proper battery voltage during this procedure.

1. Vehicle in Service Mode with the transmission in PARK.

   Note: Do not depress the brake pedal during the Electronic Brake Control Module Learn procedure.

2. Perform the Electronic Brake Control Module Learn procedure with a scan tool.

   Note: To ensure the complete brake modulator and high pressure accumulator pressure relief procedure is allowed to occur; the brake controller must see 1 pedal apply with the propulsion system enabled, followed by a proper shutdown without applying the brake pedal.

3. Vehicle ON, apply and release the brake pedal.

   Note: Vehicle OFF, without applying the brake pedal ensure the brake modulator and high pressure accumulator pressure relief occurs. This process will take approximately 1-3 minutes.

4. Vehicle OFF, without applying the brake pedal.
5. Remove the remote keyless entry transmitter and close all of the vehicle doors. Wait approximately 1-3 minutes until the brake modulator and the high pressure accumulator pressure relief is complete and the vehicle powers down.
6. Vehicle ON, brakes not applied.
7. Verify the scan tool parameters listed below are within the specified range:
   - Brake Controls Brake Pedal Position Sensor 5 V Supply Voltage - Between 4.75-5.25 V
   - Brake Controls Brake Pedal Position Sensor Circuit 1 - Between 1.4-1.7 V
   - Brake Controls Brake Pedal Position Sensor Circuit 2 - Between 58-78%

   If any parameter is not within the specified range

   Refer to DTC C029C, C120C, C129A-C129F, C12B1, or C12F8 .

   If all parameters are within the specified range
8. Vehicle ON, brakes not applied.
9. Verify the scan tool parameters listed below are less the specified range:
   - Brake Master Cylinder Pressure Sensor - Less than 100 kPa (15 psi)

- Brake Pressure Sensor - Less than 100 kPa (15 psi)
- High Pressure Accumulator Sensor - Less than 800 kPa (116 psi)

If any parameter is greater than the specified range

Replace the Q5 brake pressure modulator.

If all parameters are less than the specified range

10. Perform a brake hydraulic system test, refer to Brake Hydraulic and Assist System Diagnosis .

If the brake hydraulic system test does not pass

Repair as necessary.

If the brake hydraulic system tests normal

11. Replace the Q5 brake pressure modulator.
12. Verify the DTC does not set while operating the vehicle under the Conditions for Running the DTC.

If the DTC sets

Replace the K17 electronic brake control module.

If the DTC does not set

13. All OK.

Repair Instructions

Perform the Diagnostic Repair Verification after completing the repair.

- Electronic Brake Control Module with Brake Pressure Modulator Valve Replacement
- Control Module References for electronic brake control module replacement, programming and setup

&#169© Copyright Chevrolet. All rights reserved

Symptoms - Antilock Brake System

Note: The following steps must be completed before using the symptom tables.

1. Perform the Diagnostic System Check - Vehicle before using the symptom tables in order to verify that all of the following are true:
   - There are no DTCs set.
   - The control modules can communicate via the serial data link.
2. Review the system description and operation in order to familiarize yourself with the system functions. Refer to ABS Description and Operation .

Visual/Physical Inspection

- Inspect for aftermarket devices which could affect the operation of the ABS. Refer to Checking Aftermarket Accessories .
- Inspect the easily accessible or visible system components for obvious damage or conditions that could cause the symptom.

Intermittent

Faulty electrical connections or wiring may be the cause of intermittent conditions. Refer to Testing for Intermittent Conditions and Poor Connections .

Symptom List

Refer to a symptom diagnostic procedure from the following list in order to diagnose the symptom:

- ABS Indicator Malfunction
- Traction Control/Stability Control Indicator Malfunction
- Brake Warning Indicator Malfunction

&#169© Copyright Chevrolet. All rights reserved

ABS Indicator Malfunction

Diagnostic Instructions

- Perform the Diagnostic System Check - Vehicle prior to using this diagnostic procedure.
- Review Strategy Based Diagnosis for an overview of the diagnostic approach.
- Diagnostic Procedure Instructions provides an overview of each diagnostic category.

Circuit/System Description

The instrument cluster turns ON the ABS indicator for 5 seconds after Vehicle in Service Mode or when the electronic brake control module detects a fault and sends a serial data message to the instrument cluster commanding the indicator ON.

Reference Information

Schematic Reference

Antilock Brake System Schematics

Connector End View Reference

Component Connector End Views

Description and Operation

ABS Description and Operation

Electrical Information Reference

- Circuit Testing
- Connector Repairs
- Testing for Intermittent Conditions and Poor Connections
- Wiring Repairs

Scan Tool Reference

Control Module References for scan tool information

Circuit/System Verification

1. Vehicle in Service Mode.
2. Verify that no DTCs are set.
   If any DTCs are set
   Refer to Diagnostic Trouble Code (DTC) List - Vehicle .
   If no DTCs are set
3. Verify the instrument cluster ABS indicator turns ON and OFF when commanding the All Indicators ON and OFF with a scan tool.
   If ABS indicator does not turn ON and OFF
   Replace the P16 instrument cluster.
   If the ABS indicator turns ON and OFF
4. Verify the ABS indicator turns OFF 5 seconds after the ignition is turned ON.
   If the ABS indicator does not turn OFF
   Replace the K17 electronic brake control module.
   If the ABS indicator turns OFF
5. All OK.

Repair Instructions

Perform the Diagnostic Repair Verification after completing the diagnostic procedure.

Control Module References for electronic brake control module or instrument cluster replacement, programming and setup

&#169© Copyright Chevrolet. All rights reserved

Traction Control/Stability Control Indicator Malfunction

Diagnostic Instructions

- Perform the Diagnostic System Check - Vehicle prior to using this diagnostic procedure.
- Review Strategy Based Diagnosis for an overview of the diagnostic approach.
- Diagnostic Procedure Instructions provides an overview of each diagnostic category.

Circuit Description

The instrument cluster illuminates the Stabilitrak indicator during the instrument cluster bulb check or when the electronic brake control module detects a fault and sends a serial data message to the instrument cluster commanding the indicator ON.

Reference Information

Schematic Reference

Antilock Brake System Schematics

Connector End View Reference

Component Connector End Views

Description and Operation

ABS Description and Operation

Electrical Information Reference

- Circuit Testing
- Connector Repairs
- Testing for Intermittent Conditions and Poor Connections
- Wiring Repairs

Scan Tool Reference

Control Module References for scan tool information

Circuit/System Verification

When the ignition is turned ON, the stabilitrak indicator lamp should illuminate, then after 5 seconds it should turn OFF.

1. Vehicle in Service Mode.
2. Verify the instrument cluster traction control/stability control-active indicator turns ON and OFF when commanding the All Indicators ON and OFF with a scan tool.
   If the indicator does not turn ON and OFF
   Replace the P16 instrument cluster.
   If the indicator turns ON and OFF
3. All OK.

Repair Instructions

Perform the Diagnostic Repair Verification after completing the repair.

Control Module References for instrument cluster replacement, programming and setup

&#169© Copyright Chevrolet. All rights reserved

Antilock Brake System Automated Bleed

Special Tools

- *CH-29532-A* Brake Pressure Bleeder
- *CH-35589-A* Brake Bleeder Adapter

For equivalent regional tools, refer to Special Tools .

Warning: At times during this brake bleed procedure brake fluid will be under higher pressures than during typical brake bleed procedures. Ensure the bleeder hose attached to the bleeder valve is securely maintained in position whenever the bleeder valve is opened. Failure to maintain the bleeder hose securely to the valve when opened, may allow the hose to blow off and brake fluid to spray out of the bleeder valve, possibly resulting in personal injury.

Caution: Only use products that comply with GM specifications and check manufacturer information respectively. We recommend the use of GM genuine products. Instructions must be followed at all times. The use of any type of fluid other than the recommended type of brake fluid, may cause contamination which could result in damage to the internal rubber seals and/or rubber linings of hydraulic brake system components.

Caution: Refer to Brake Fluid Effects on Paint and Electrical Components Caution in the Preface section.

Note:

- Do not pressurise the brake pressure bleeder *CH-29532-A* Brake Pressure Bleeder and thereby the master cylinder reservoir until instructed to do so by the scan tool. Portions of the automated bleed process require the master cylinder reservoir not be pressurised through the *CH-29532-A* Brake Pressure Bleeder .
- Do not apply the brake pedal until instructed to do so by the scan tool. Applying the brake pedal before instructed by the scan tool may result in setting a DTC and may require the sensor and boost valve calibration and electronic brake control module (EBCM) learn procedures to be repeated manually.

  Note: The transmission must be in the PARK position, the power button in the OFF position, and the brakes not applied to ensure the brake modulator and high pressure accumulator (HPA) pressure relief occurs. This process will take approximately 1 to 3 minutes.

1. Place the transmission in PARK.
2. Place the power button in the OFF position.
3. Wait approximately 3 minutes for the HPA pressure relief to occur.

   Danger: Do not use a service jack in locations other than those specified to lift this vehicle. Lifting the vehicle with a jack in those other locations could cause the vehicle to slip off the jack and roll; this could cause injury or death.

4. Raise and support the vehicle. Refer to Lifting and Jacking the Vehicle .

5. Remove the tyre and wheel assemblies. Refer to Tyre and Wheel Removal and Installation .
6. Inspect the brake system for leaks and visual damage. Refer to Symptoms - Hydraulic Brakes . Repair or replace components as necessary.
7. Lower the vehicle to allow for entry and exit while bleeding the brake corners and other components.
8. Connect a battery charger with 20 amp output to the 12V battery. The battery charger must remain connected and maintain 12V 20 amp for the entire automated bleed procedure. Refer to Battery Charging .
9. Install a scan tool to the vehicle.

   Note: The power button must remain ON during this entire procedure.

10. Place the power button in the ON position.

    Note: Do not pressurise the pressure bleeder *CH-29532-A* Brake Pressure Bleeder , and thereby the master cylinder reservoir, until instructed to do so by the scan tool.

11. Using the scan tool, perform the following steps:
    11.1. Select Diagnostics
    11.2. Select the appropriate vehicle information
    11.3. Select Chassis
    11.4. Select Electronic Brake Control Module (EBCM)
    11.5. Select Special Functions
    11.6. Select Automated Bleed
12. Press Start to begin the automated bleed procedure. Ensure the *CH-29532-A* Brake Pressure Bleeder has not yet been installed to the vehicle.

    The travel and pressure sensors are being calibrated and learned by the EBCM during this step.

13. Press Start to continue.

    Note: Approximately 2.5-3.0 L (2.6-3.2 qt) of brake fluid will be used throughout this procedure. Ensure there is an adequate supply of brake fluid in the *CH-29532-A* Brake Pressure Bleeder .

14. Inspect the fluid level in the *CH-29532-A* Brake Pressure Bleeder . Clean the outside of the *CH-29532-A* Brake Pressure Bleeder and add GM approved or equivalent DOT-3 brake fluid from a clean, sealed brake fluid container, as necessary.
15. Clean the outside of the master cylinder reservoir on and around the reservoir cap prior to removing the cap and diaphragm.

    Note: Do not pressurise the *CH-29532-A* Brake Pressure Bleeder and thereby the master cylinder reservoir until instructed to do so by the scan tool.

16. Install the *CH-35589-A* Brake Bleeder Adapter and the *CH-29532-A* Brake Pressure Bleeder to the vehicle.

    Note: Ensure a MINIMUM of 200 kPa (30 psi) of pressure is MAINTAINED in the *CH-29532-A* Brake Pressure Bleeder throughout this procedure, except as instructed.

17. Set the pressure regulator of the *CH-29532-A* Brake Pressure Bleeder to 207 to 414 kPa (30 to 60 psi).
18. Open the *CH-29532-A* Brake Pressure Bleeder fluid tank valve to allow pressurised brake fluid to enter the brake system.
19. Wait approximately 30 seconds, then inspect the entire hydraulic brake system to ensure there are no existing external brake fluid leaks.

20. Secure bleeder hoses to all 4 brake calliper bleeder valves.
21. Bleed each of the 4 brake corners using the *CH-29532-A* Brake Pressure Bleeder in the following sequence. Ensure the brake fluid is clear and free of air bubbles at each corner.
    21.1. Left front
    21.2. Right front
    21.3. Left rear
    21.4. Right rear
22. Ensure each of the 4 brake calliper bleeder valves are tightened securely.
23. Press Start to begin the system automated bleed steps.

    Follow all instructions on the scan tool. Only apply the brake pedal when instructed to do so by the scan tool.

24. When instructed, firmly apply and release the brake pedal using smooth, consistent full brake pedal strokes.

    The brake pedal will go fully to the floor with some pedal feedback felt. The master cylinder reservoir supply circuit is being flushed through these steps.

25. Continue the brake applications until instructed by the scan tool.

    The scan tool will instruct to perform 10 brake applies.

26. When instructed by the scan tool, stop performing the brake applications and press Enter.
27. When instructed by the scan tool, press Start to continue.

    Note: The hydraulic brake system will be under high pressure during the next bleed sequence. Ensure the bleeder hose is maintained securely to the bleeder valve, and open the bleeder valve slowly.

28. Following the instructions on the scan tool, open the right rear (RR) brake calliper bleeder valve.
29. With the bleeder valve open and the bleeder hose maintained firmly in place, press Start to begin the bleeding process.

    This process will run in a 30-second cycle. The pump and HPA circuits are being flushed during these steps.

30. Press Enter when instructed to repeat the bleeding process 3 more times on the scan tool.
31. Press Enter when instructed at the end of the 4th bleeding process.
32. Ensure the RR brake calliper bleeder valve is tightened securely.
33. Following the instructions on the scan tool, open the left rear (LR) brake calliper bleeder valve.
34. With the bleeder valve open and the bleeder hose maintained firmly in place, press Start to begin the bleeding process.
35. Press Enter when instructed to repeat the bleeding process 3 more times on the scan tool.
36. Press Enter when instructed at the end of the 4th bleeding process.
37. Ensure the LR brake calliper bleeder valve is tightened securely.
38. Reduce the charge in the air tank of the *CH-29532-A* Brake Pressure Bleeder to 0 kPa (0 psi).
39. Press Start to continue.

This sequence will run in a 20-second cycle. The brake pedal simulator circuit is being flushed through this step.

40. Press Enter when instructed to repeat the bleeding process 5 more times on the scan tool.
41. Set the pressure regulator of the *CH-29532-A* Brake Pressure Bleeder to 207 to 414 kPa (30 to 60 psi).
42. Press Enter to continue.

    This sequence will run in a 120-second cycle. The boost side of the secondary master cylinder is being flushed through this step.

43. Open the right rear (RR) brake calliper bleeder valve.
44. Press Enter when instructed to repeat the bleeding process 1 more time on the scan tool.
45. Press Enter to continue.
46. Following the instructions on the scan tool, press Start to begin the next bleed sequence.
47. Open the right rear (RR) brake calliper bleeder valve.

    Ensure the RR bleeder valve is fully bled and securely tightened before the 60-second cycle is completed. Do not leave the bleeder valve open for longer than 60-seconds.

48. If the RR bleeder valve was not fully bled within the 60-second cycle time, press Start to repeat Step 46 until the brake fluid is clear of any air.
49. Press Enter to continue.
50. Following the instructions on the scan tool, press Start to begin the next bleed sequence.
51. Open the left rear (LR) brake calliper bleeder valve.

    Ensure the LR bleeder valve is fully bled and securely tightened before the 60-second cycle is completed. Do not leave the bleeder valve open for longer than 60-seconds.

52. If the RR bleeder valve was not fully bled within the 60-second cycle time, press Start to repeat Step 50 until the brake fluid is clear of any air.
53. Press Enter to continue.
54. Secure bleeder hoses to all 4 brake calliper bleeder valves.
55. Bleed each of the 4 brake corners using the *CH-29532-A* Brake Pressure Bleeder , in the following sequence. Ensure the brake fluid is clear and free of air bubbles at each corner.
    55.1. Left front
    55.2. Right front
    55.3. Left rear
    55.4. Right rear
56. Ensure each of the 4 brake calliper bleeder valves are tightened securely.
57. Press Enter to continue.
58. Remove the *CH-35589-A* Brake Bleeder Adapter and the *CH-29532-A* Brake Pressure Bleeder from the vehicle.

    Note: The system is active and pressurised, therefore the brake fluid level in the master cylinder reservoir cannot be allowed to be higher than the MAX mark of the operating range.

59. Ensure the master cylinder reservoir is filled no higher than the MAX operating range line. Add or remove brake fluid as necessary. Refer to Master Cylinder Reservoir

Filling .

60. Start the engine.
61. Press Start to continue the final sequence.

    The pump and the HPA circuits are being flushed, and the boost valve is being calibrated and learned by the EBCM through this step.

62. Continue to follow the instructions on the scan tool.
63. Allow the engine to idle for 1 minute to allow the system to recalibrate.
64. Place the power button in the OFF position, then place the power button in the ON position.
65. Clear any DTCs from the EBCM.
66. The brake control modulator is an OBDII compliant module. As such, brake related DTCs may be stored in the powertrain control modules. After addressing any other stored DTCs, clear any brake related DTCs stored in the powertrain control modules.
67. Place the power button in the OFF position, without applying the brake pedal.
68. Allow the vehicle to remain OFF for at least 1 minute before applying the brake pedal or performing a test drive.

    This waiting period is essential to complete the sensor and boost valve calibration and EBCM learn processes, and to allow the HPA to depressurise to allow for a deactivated system pedal feel check.

69. Remove the scan tool from the vehicle.
70. Before activating the power button, firmly apply the brake pedal several times.

    Observe the brake pedal feel.

71. If the brake pedal feels spongy, perform the following:
    71.1. Repeat the base hydraulic brake system bleeding procedure. Refer to Hydraulic Brake System Bleeding : Pressure .
    71.2. If the brake pedal feel is now firm, repeat the automated bleeding procedure.
    71.3. If the brake pedal stills feels spongy after repeating the base hydraulic brake system bleeding procedure, inspect the brake system for external leaks. Refer to Brake System External Leak Inspection .
72. If the brake pedal stills feels spongy, an if no external brake fluid leaks are found, inspect the brake system for internal leaks and inspect the brake pedal travel. Refer to Brake System Internal Leak Test and Brake Pedal Travel Measurement and Inspection .
73. If internal leaks are found, replace the master cylinder. Refer to Master Cylinder Replacement .
74. If the brake pedal travel exceeds specification and there is no damage to the pedal system or pushrod, replace the master cylinder. Refer to Master Cylinder Replacement .
75. Place the power button in the ON position.

    Observe if the brake system warning lamp remains illuminated.

76. If the brake system warning lamp remains illuminated, DO NOT allow the vehicle to be driven until the brake system is diagnosed and repaired. Refer to Symptoms - Hydraulic Brakes .
77. Firmly apply the brake pedal several times.

    Observe the brake pedal feel.

78. If the brake pedal feels spongy, repeat the automated bleeding procedure until a firm brake pedal is obtained.
79. Drive the vehicle to a speed above 13 km/h (8 mph) to allow ABS initialisation to occur.

    Observe the brake pedal feel.

80. If the brake pedal feels spongy, repeat the automated bleeding procedure until a firm brake pedal is obtained.

&#169© Copyright Chevrolet. All rights reserved

Steering Angle Sensor Centreing

The external column mounted steering angle sensor does not require centring often. Centring of the steering wheel angle sensor might be required after certain service procedures are performed. Some of these procedures are as follows:

- Electronic brake control module replacement
- Steering column replacement
- Steering gear replacement
- Steering wheel angle sensor replacement
- Steering linkage inner tie rod replacement
- Steering linkage outer tie rod replacement
- Collision or other physical damage

The external column mounted steering angle sensor centring procedure can be completed with a scan tool using the following steps:

1. Using the steering wheel, align the front wheels forward.
2. Apply the hand brake, or set the transmission in the P position.
3. Install the scan tool to the data link connector.
4. Vehicle in Service Mode, engine OFF.
5. Select Steering Wheel Angle Sensor Reset in the Steering Wheel Angle Sensor Module Configuration/Reset Functions list.
6. Follow the scan tool directions to complete the Reset procedure.
7. Select Steering Wheel Angle Sensor Learn in the Steering Wheel Angle Sensor Module Configuration/Reset Functions list.
8. Follow the scan tool directions to complete the Learn procedure.
9. Clear any DTCs that may be set.
10. Select Power Steering Softstops Reset in the Electric Power Steering Control Module Configuration/Reset Functions list.
11. Follow the scan tool directions to complete the Reset procedure.
12. Select Power Steering Softstops Learn in the Electric Power Steering Control Module Configuration/Reset Functions list.
13. Follow the scan tool directions to complete the Learn procedure.
14. Clear any DTCs that may be set.

&#169© Copyright Chevrolet. All rights reserved

Electronic Brake Control Module Replacement

Removal Procedure

Warning: Refer to Brake Fluid Irritant Warning in the Preface section.

Caution: Refer to Brake Fluid Effects on Paint and Electrical Components Caution in the Preface section.

Caution: Always connect or disconnect the wiring harness connector from the EBCM/EBTCM with the ignition switch in the OFF position. Failure to observe this precaution could result in damage to the EBCM/EBTCM.

> **Note:** The transmission must be in the PARK position, the power button in the OFF position, and the brakes not applied to ensure the brake modulator and high pressure accumulator (HPA) pressure relief occurs. This process will take approximately 1 to 3 minutes.

1. Place the transmission in PARK.
2. Place the power button in the OFF position.
3. Remove the remote keyless entry (RKE) transmitter and close all of the vehicle doors.
4. Wait approximately 3 minutes for the HPA pressure relief to occur.
5. Remove the front suspension strut housing brace. Refer to Front Suspension Strut Housing Brace Replacement .
6. Disconnect the electronic brake control module (EBCM) electrical connector.

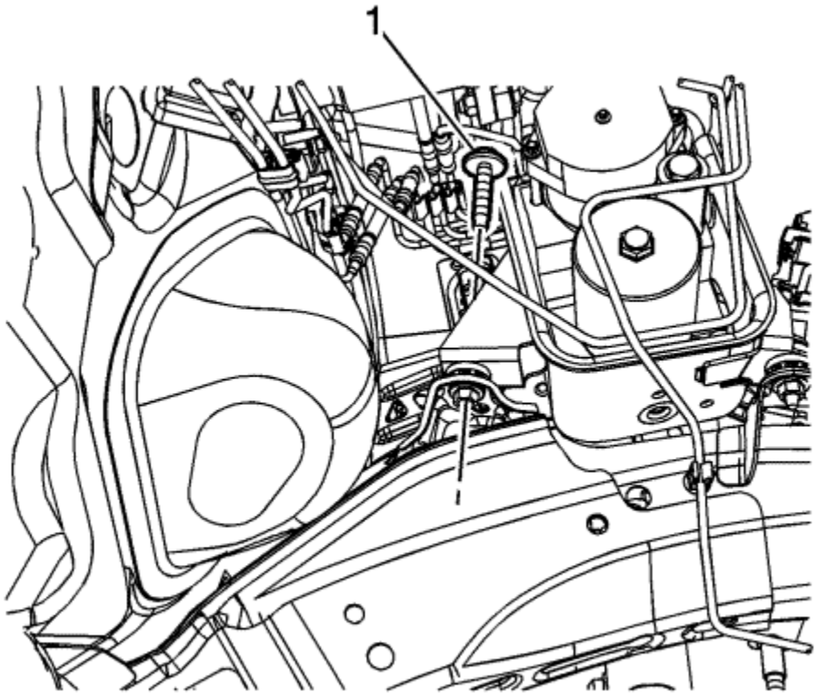

7. Remove the brake pressure modulator valve (BPMV) bracket bolt (1).
8. Without disconnecting the connectors, remove the fasteners and position the drive motor generator power inverter module aside. Refer to Drive Motor Generator Power Inverter Module Replacement .
9. Remove the bolt and position aside the engine wiring junction block.

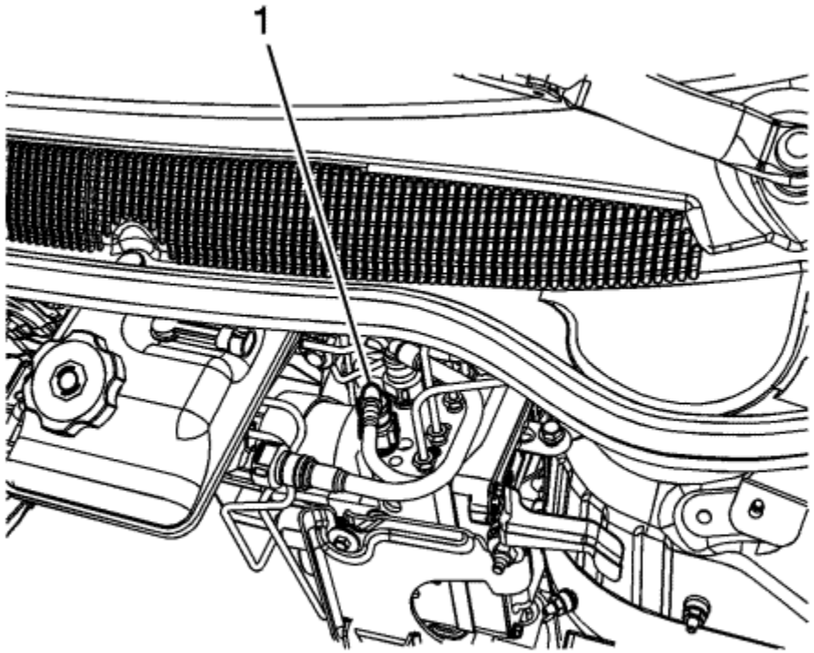

10. Disconnect the BPMV return hose quick connect (1).
11. Cap the BPMV outlet port and plug the return hose to prevent brake fluid loss and contamination.

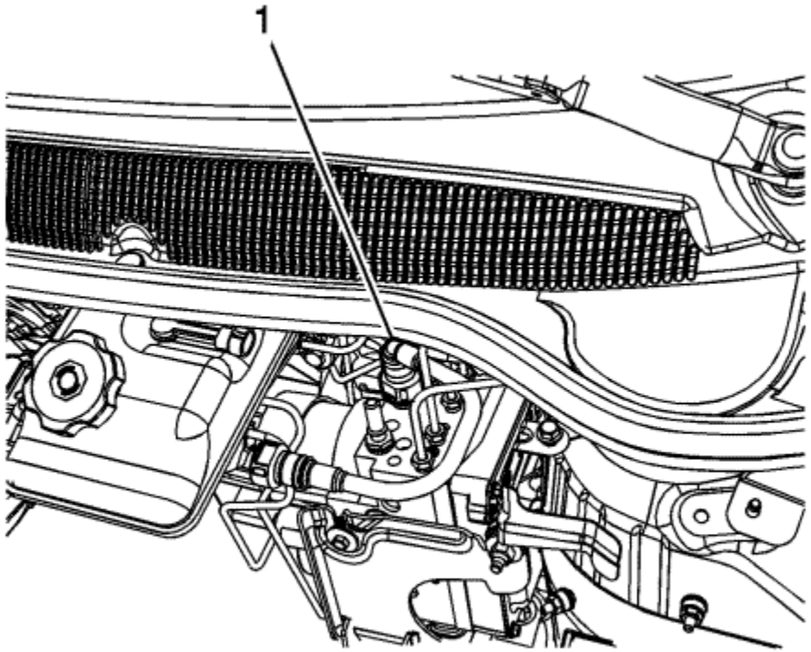

12. Disconnect the BPMV supply hose quick connect (1).
13. Cap the BPMV inlet port and plug the supply hose to prevent brake fluid loss and contamination.

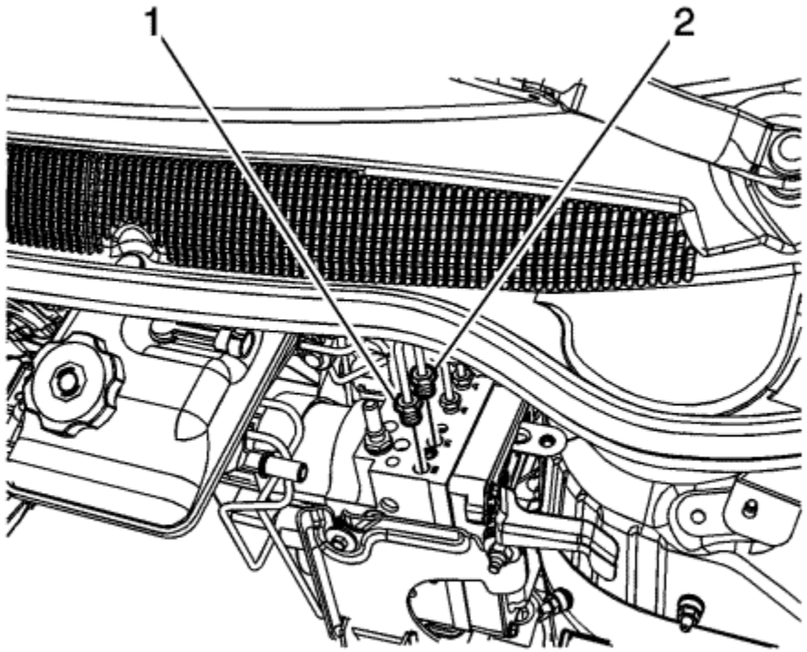

Note: Mark the location of the brake pipe fittings at the BPMV to ensure correct installation.

14. Disconnect the right rear (1) and left rear (2) brake pipe fittings from the BPMV.
15. Cap the brake pipe fittings and the BPMV outlet ports to prevent brake fluid loss and contamination.

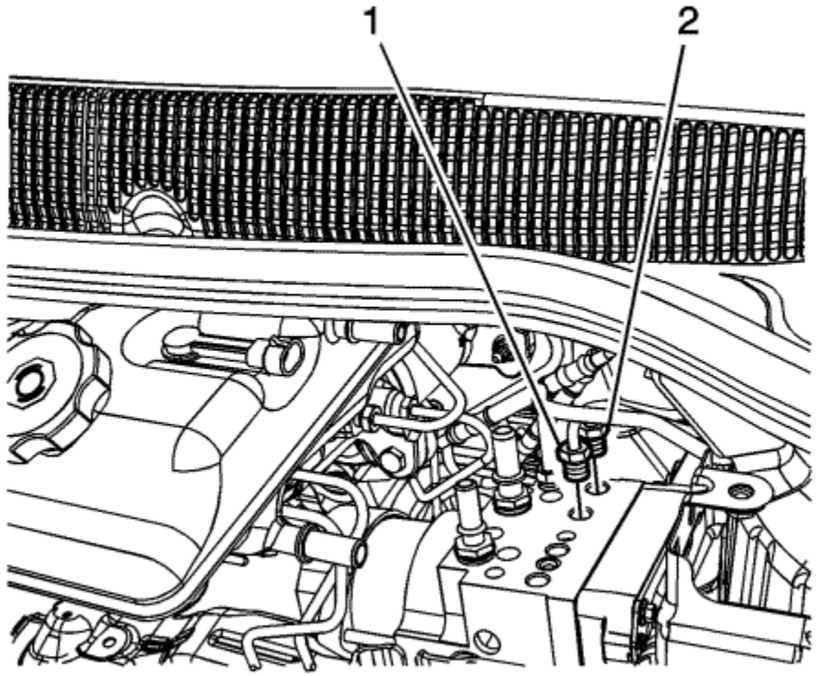

Note: Mark the location of the brake pipe fittings at the BPMV to ensure correct installation.

16. Disconnect the left front (1) and right front (2) secondary brake pipe fittings from the BPMV.
17. Cap the brake pipe fittings and the BPMV outlet ports to prevent brake fluid loss and contamination.

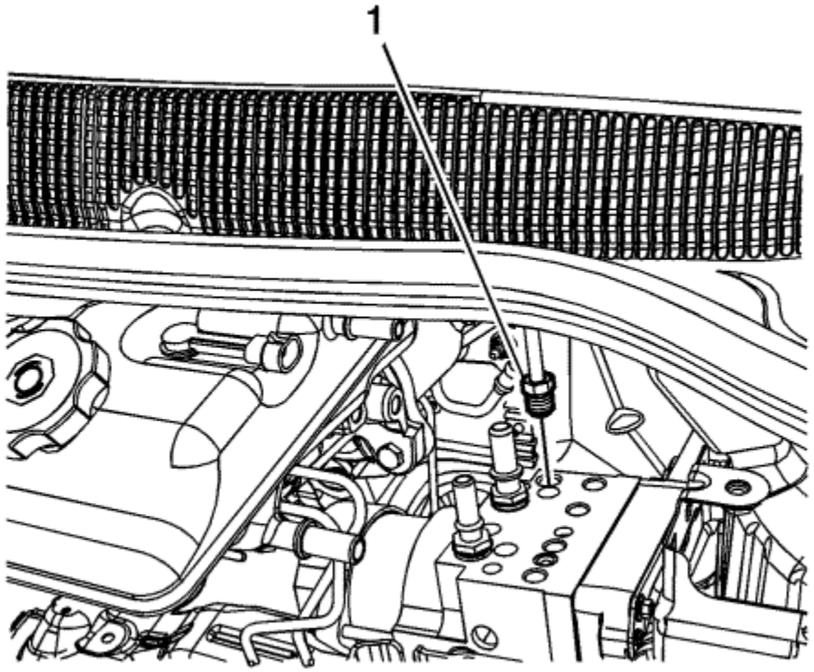

18. Disconnect the master cylinder primary brake pipe fitting (1).
19. Cap the brake pipe fitting and the BPMV inlet port to prevent brake fluid loss and contamination.

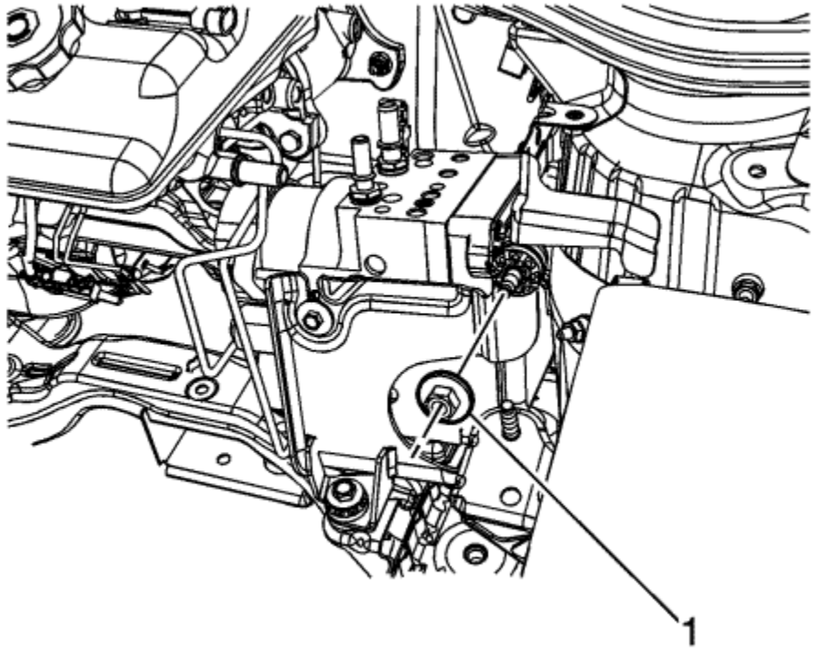

20. Remove the BPMV bracket nut (1).

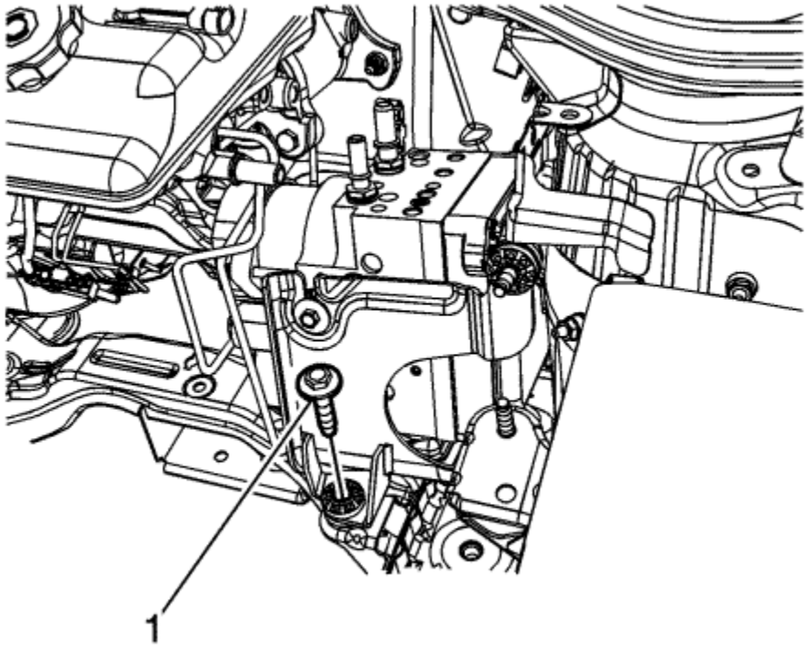

21. Remove the BPMV bracket bolt (1).
22. Remove the brake master cylinder. Refer to Master Cylinder Replacement .
23. Carefully move the front brake pipes and remove the hydraulic control unit and bracket assembly.

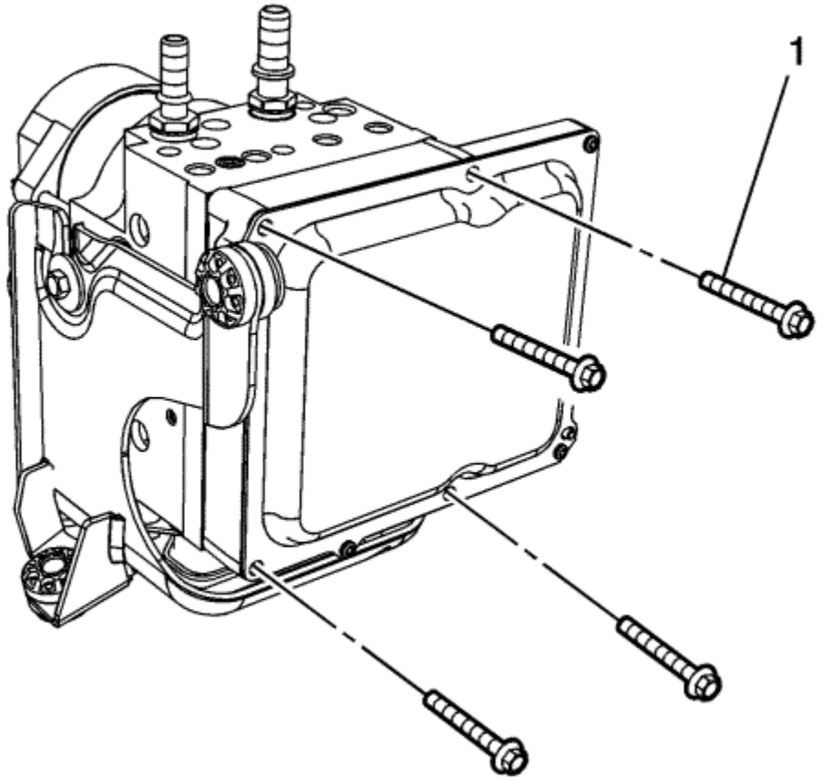

24. Remove the EBCM bolts (1).

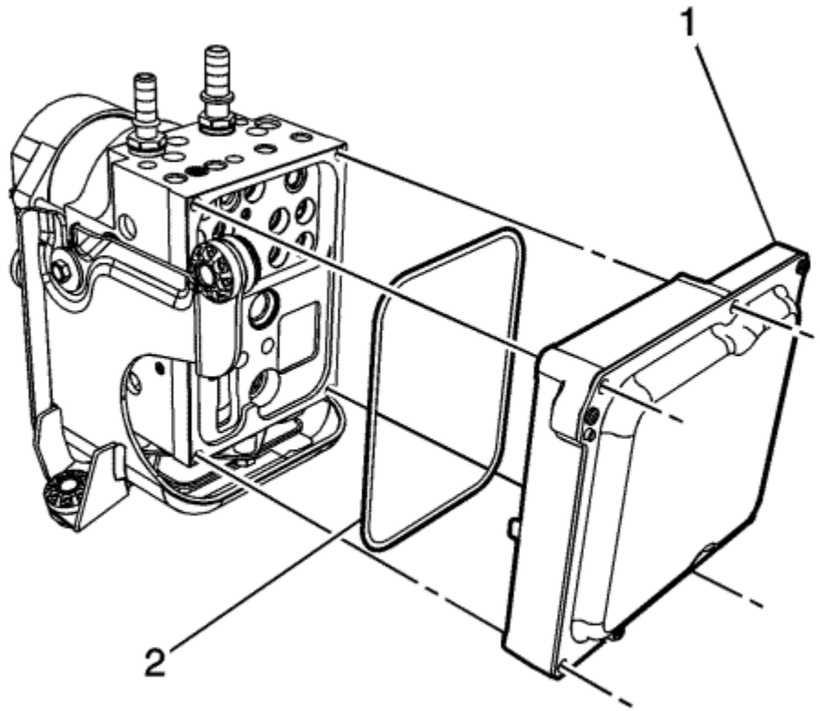

Note: Do not pry the EBCM from the BPMV. The EBCM must be pulled back evenly.

25. Carefully separate the EBCM (1) and seal (2) from the BPMV. Do not pry or force the components apart.

Installation Procedure

1. Clean the sealing surfaces of the EBCM and the BPMV with denatured alcohol or equivalent and allow to dry.

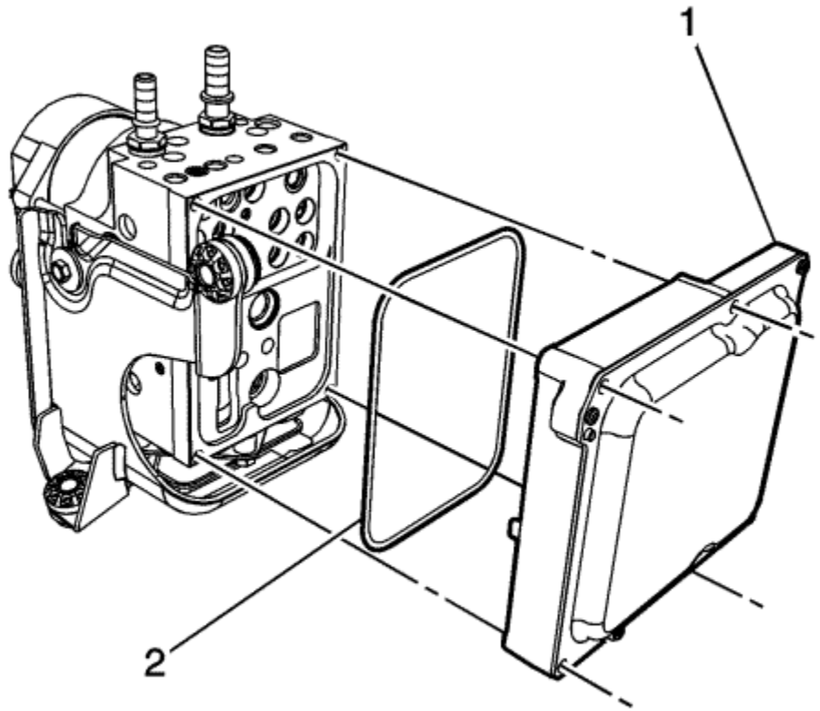

2. Install the EBCM (1) and seal (2) to the BPMV.

   Caution: Refer to Fastener Caution in the Preface section.

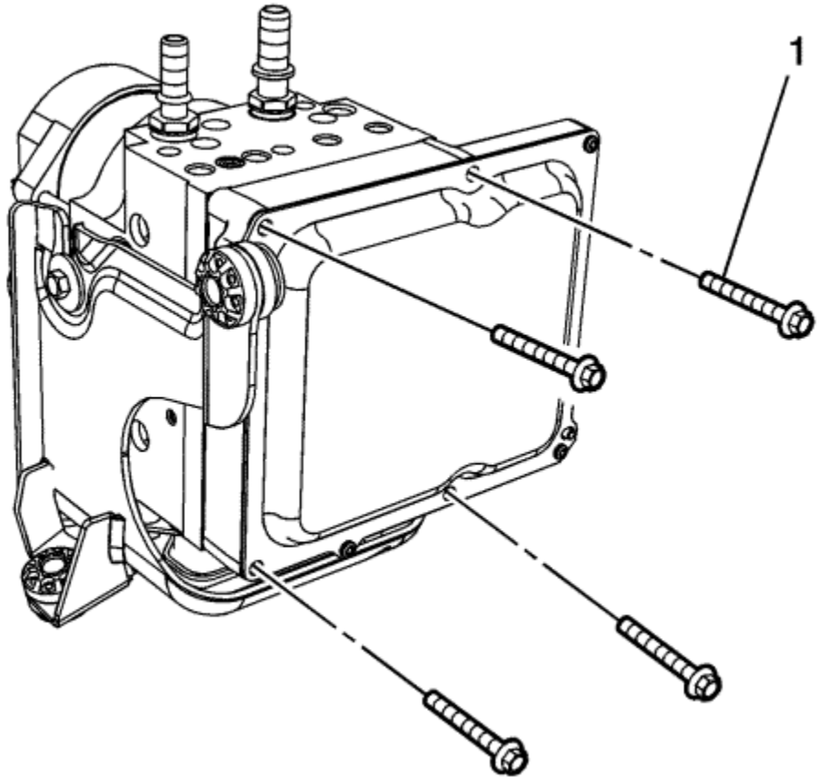

3. Install the EBCM bolts (1) and tighten to **3 N·m (27 lb in)**.
4. Carefully move the front brake pipes and install the hydraulic control unit and bracket assembly.

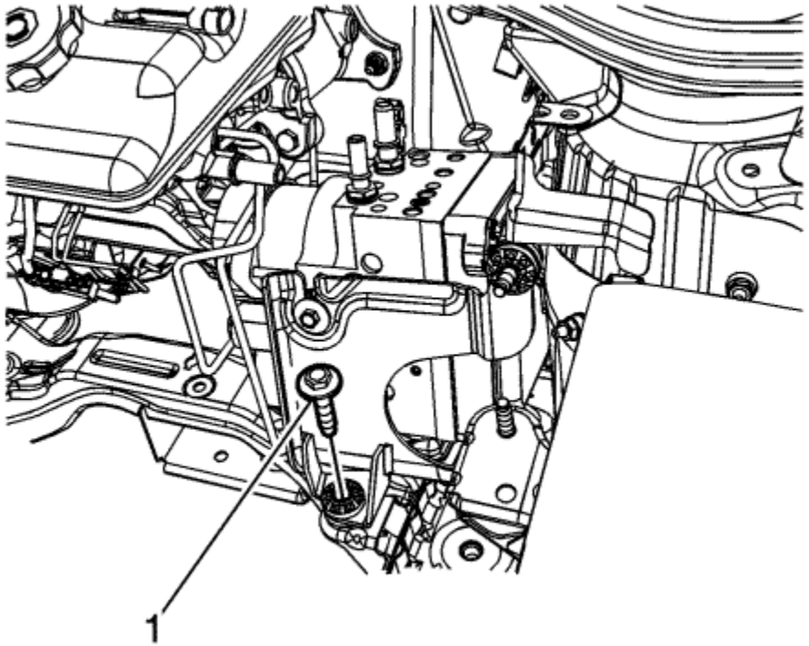

5. Install the BPMV bracket bolt (1) and tighten to **22 N·m (16 lb ft)**.

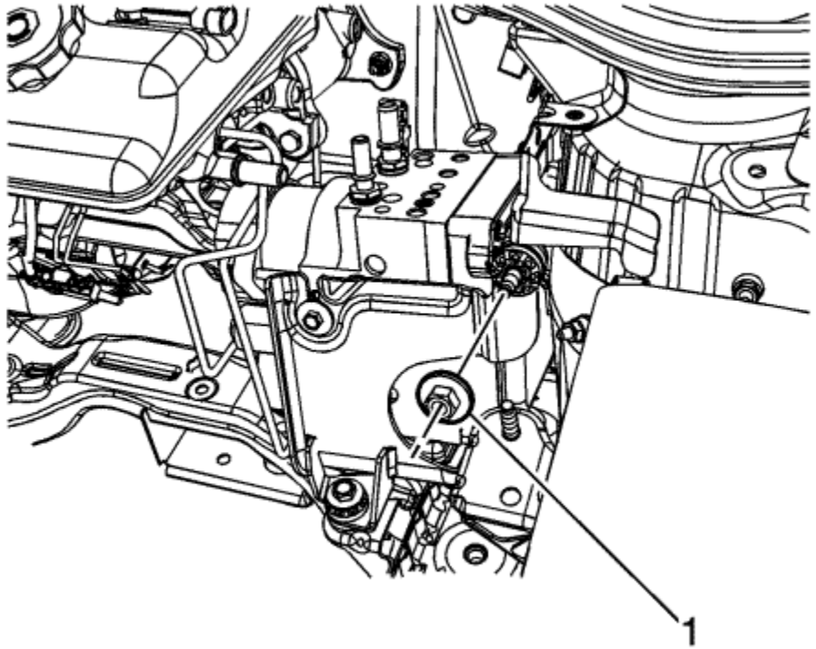

6. Install the BPMV bracket nut (1) and tighten to **22 N·m (16 lb ft)**.
7. Install the brake master cylinder. Refer to Master Cylinder Replacement .

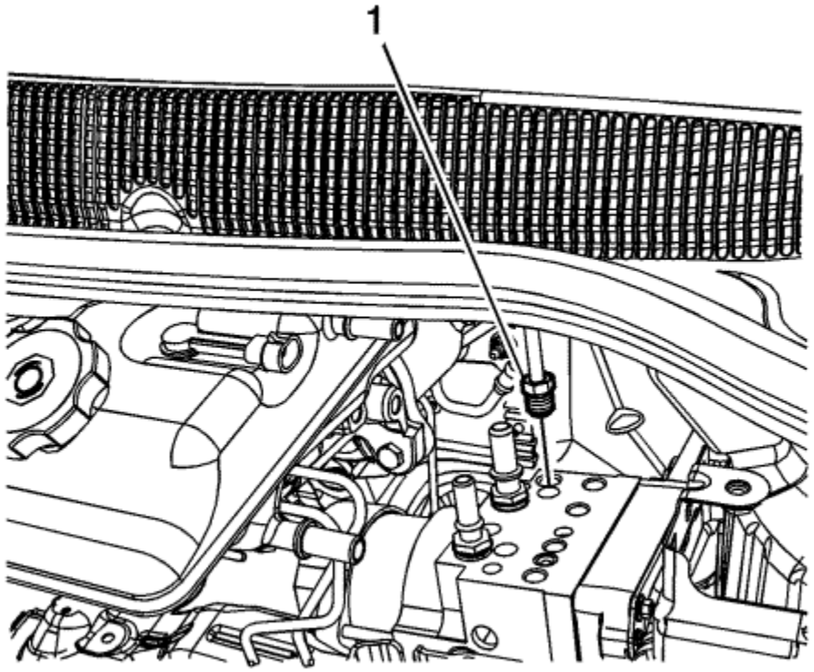

8. Install the master cylinder primary brake pipe and tighten the fitting (1) to **23 N·m (17 lb ft)**.

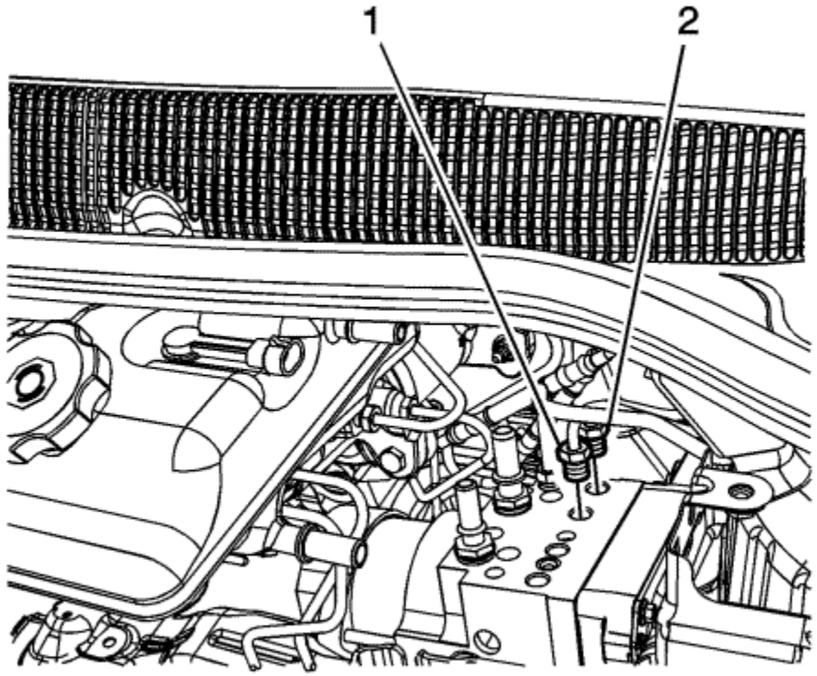

9. Install the left front (1) and right front (2) secondary brake pipes and tighten the fittings to **19 N·m (14 lb ft)**.

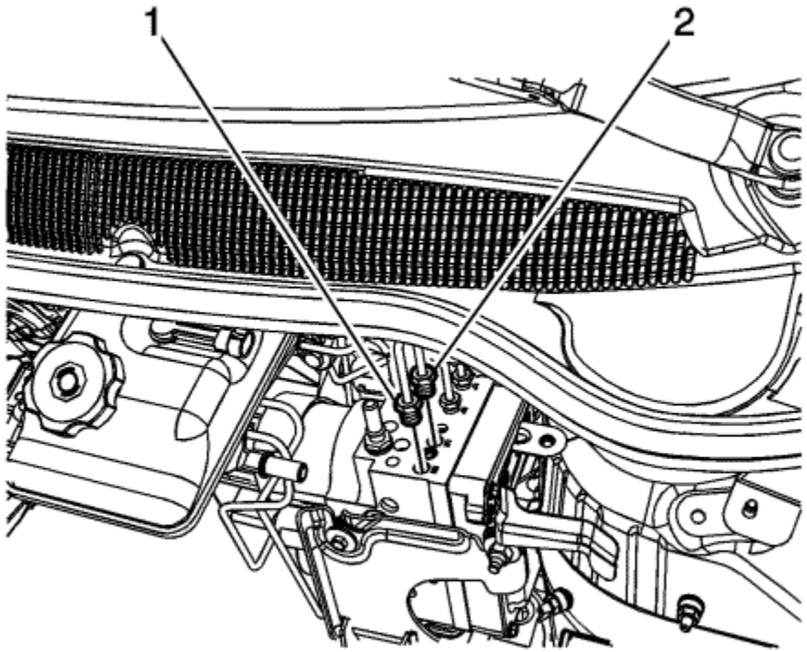

10. Install the right rear (1) and left rear (2) brake pipes and tighten the fittings to **23 N·m (17 lb ft)**.

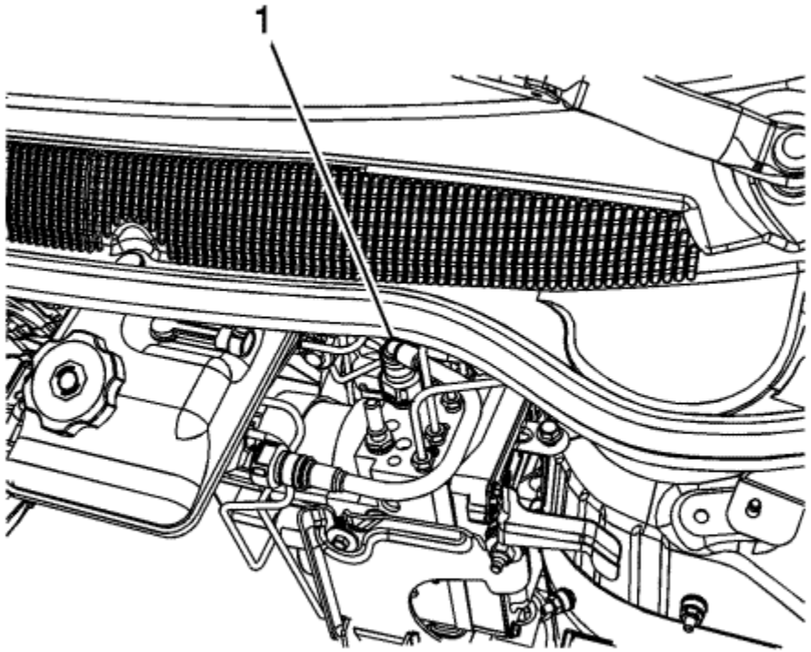

11. Connect the BPMV supply hose quick connect (1).
12. Ensure the supply hose quick connect is fully engaged by attempting to pull the supply hose from the inlet fitting.

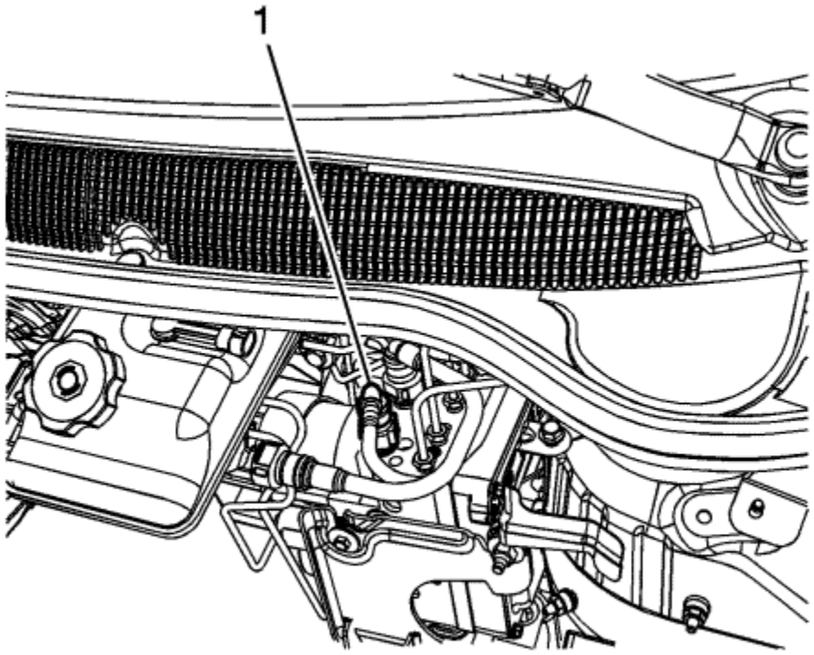

13. Connect the BPMV return hose quick connect (1).
14. Ensure the return hose quick connect is fully engaged by attempting to pull the return hose from the outlet fitting.
15. Install the engine wiring junction block and bolt.
16. Install the drive motor generator power inverter module. Refer to Drive Motor Generator Power Inverter Module Replacement .

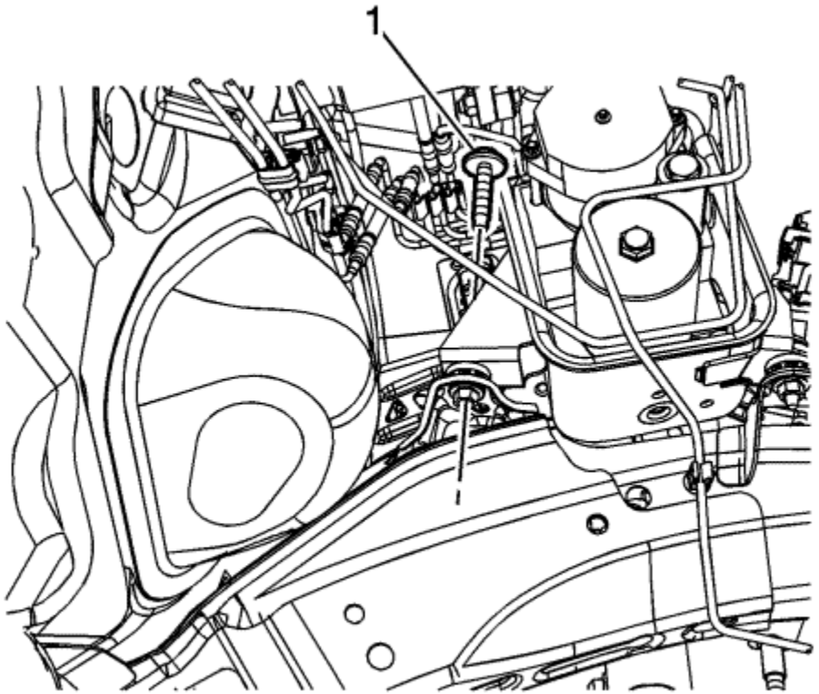

17. Install the BPMV bracket bolt (1) and tighten to **22 N·m (16 lb ft)**.
18. Connect the EBCM electrical connector.
19. Install the front suspension strut housing brace. Refer to Front Suspension Strut Housing Brace Replacement .
20. If installing a new EBCM, the EBCM must be programmed. Refer to Control Module References .
21. Perform the Antilock Brake System Automated Bleed . Follow the procedure completely to ensure the sensor and boost valve calibration and EBCM learn processes have been completed.

© Copyright Chevrolet. All rights reserved

Electronic Brake Control Module with Brake Pressure Modulator Valve Replacement

Removal Procedure

1. Remove the electronic brake control module (EBCM). Refer to Electronic Brake Control Module Replacement .

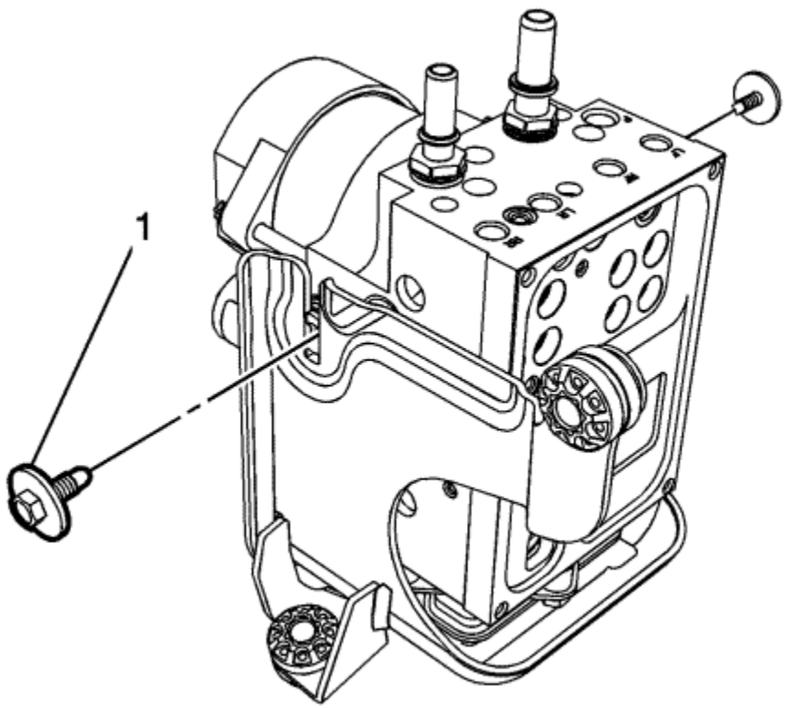

2. Remove the 2 brake pressure modulator valve (BPMV) bolts (1).

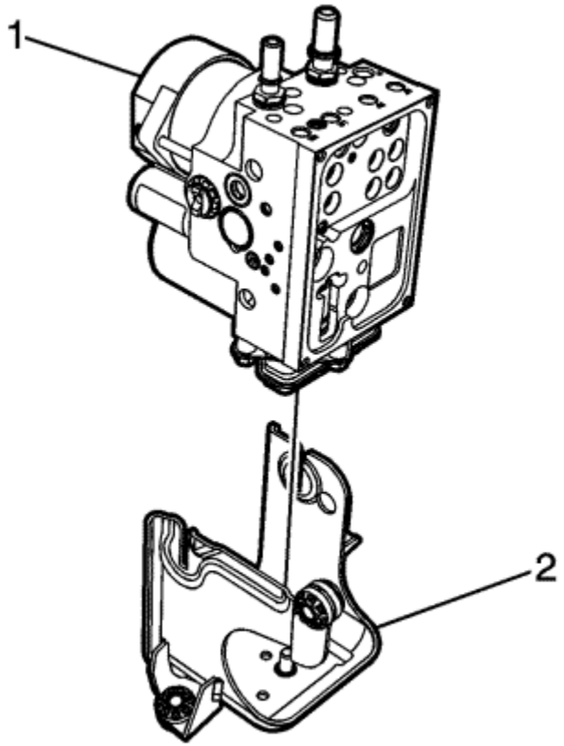

3. Remove the BPMV (1) from the bracket (2).

Installation Procedure

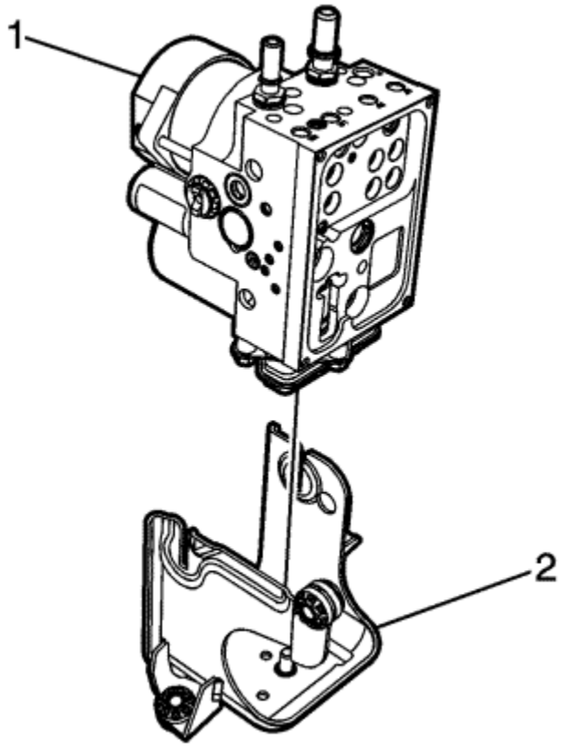

1. Install the BPMV assembly (1) to the bracket (2).

   Caution: Refer to Fastener Caution in the Preface section.

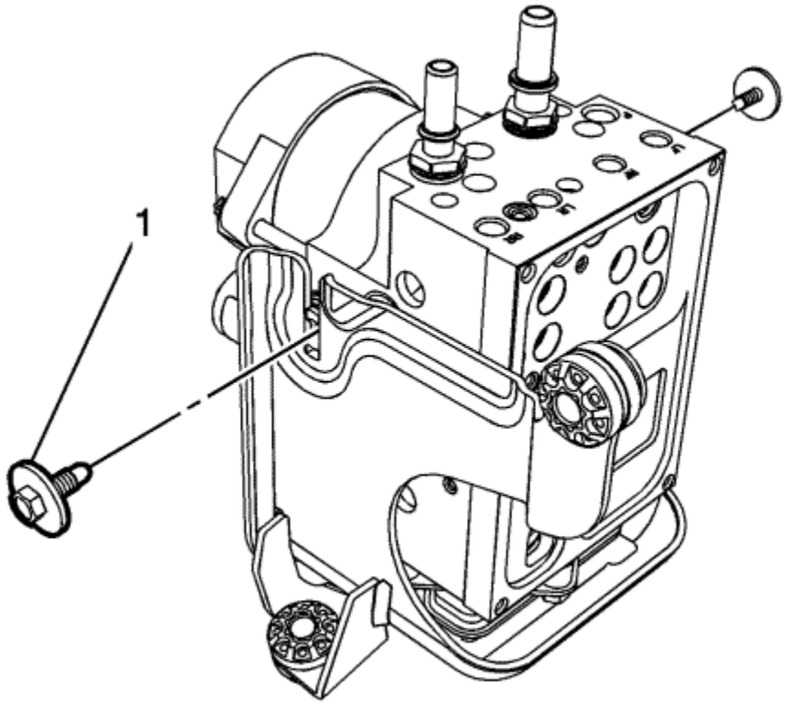

2. Install the 2 BPMV bolts (1) and tighten to **8 N·m (71 lb in)**.
3. Install the EBCM. Refer to Electronic Brake Control Module Replacement .

© Copyright Chevrolet. All rights reserved

Brake Control Brake Pedal Position Sensor Replacement

Removal Procedure

1. Disconnect the brake control brake pedal position sensor electrical connector.

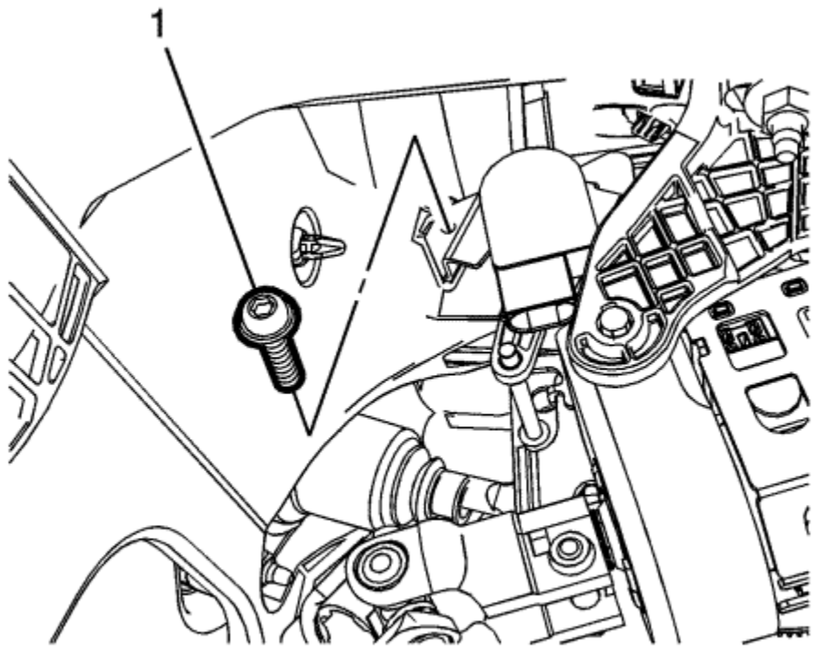

2. Remove the brake control brake pedal position sensor bolt (1).

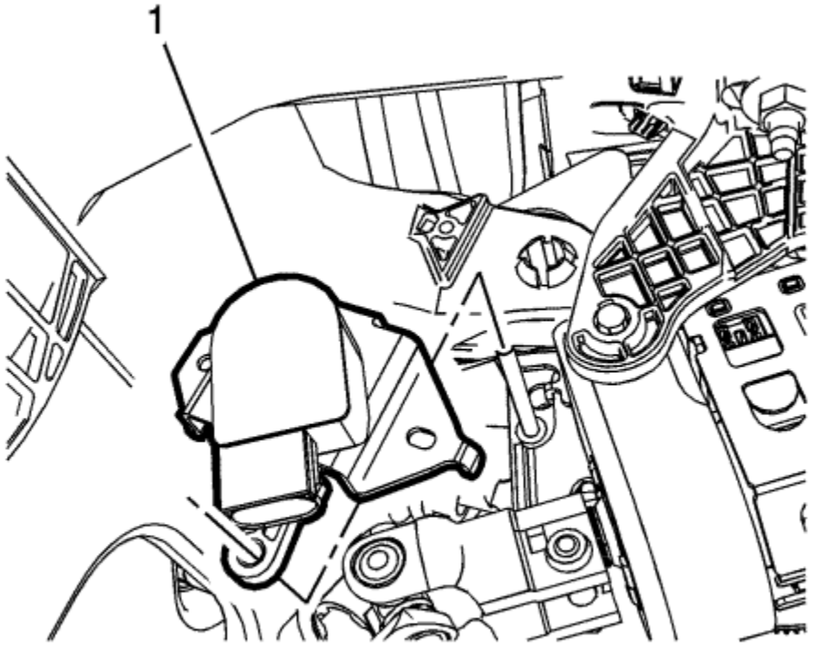

3. Remove the brake control brake pedal position sensor (1).

Installation Procedure

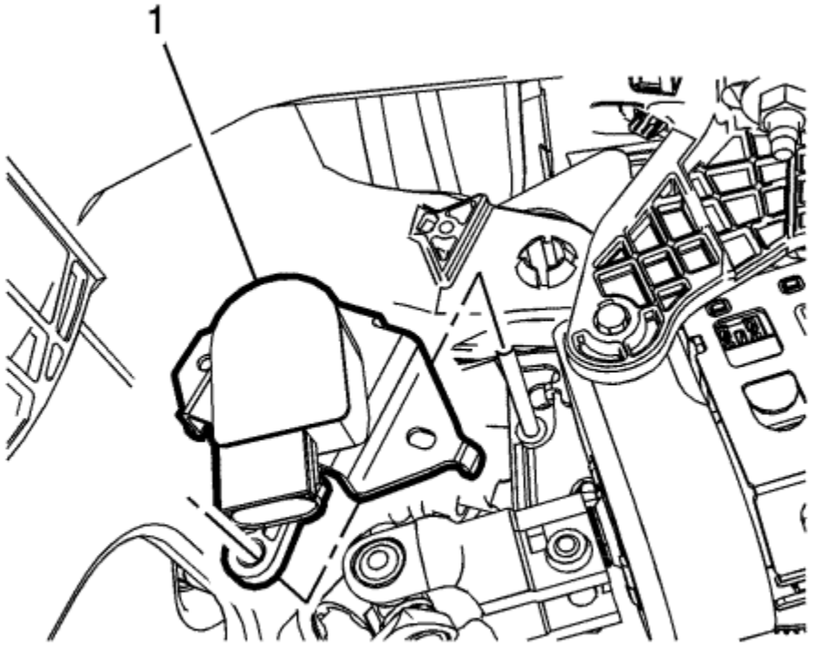

1. Align the locating pin on the brake control brake pedal position sensor (1) to the hole on the brake pedal assembly bracket.
2. Ensure the brake control brake pedal position sensor fork is properly located on the brake pedal pin.

Caution: Refer to Fastener Caution in the Preface section.

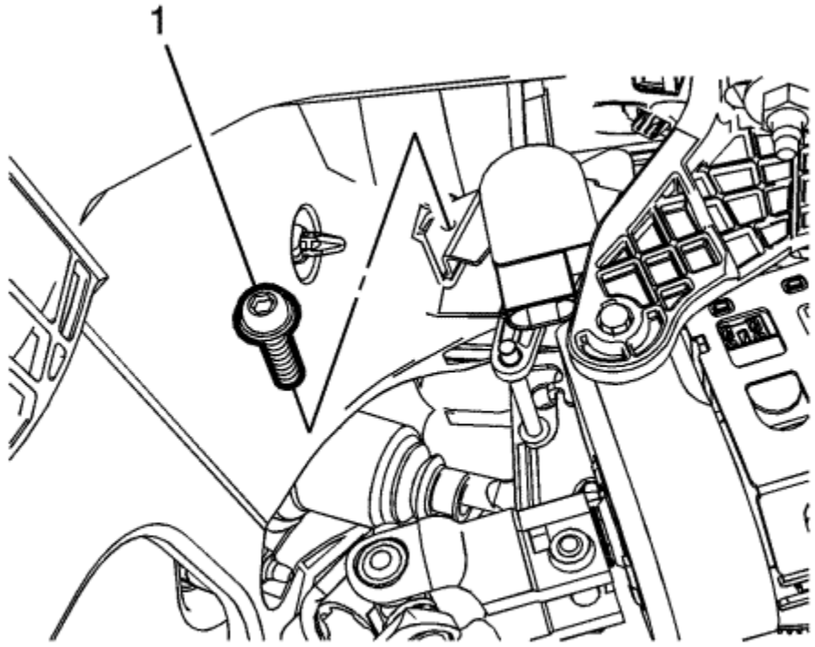

3. Install the brake control brake pedal position sensor bolt (1) and tighten to **9 N·m (80 lb in)**.
4. Connect the brake control brake pedal position sensor electrical connector.
5. Perform the Diagnostic System Check - Vehicle .

© Copyright Chevrolet. All rights reserved

Electronic Brake Control Position Sensor Replacement

Removal Procedure

1. Remove the driver side inflatable restraint lower module. Refer to Inflatable Restraint Instrument Panel Lower Module Replacement - Driver Side .
2. Disconnect the electronic brake control position sensor electrical connector.

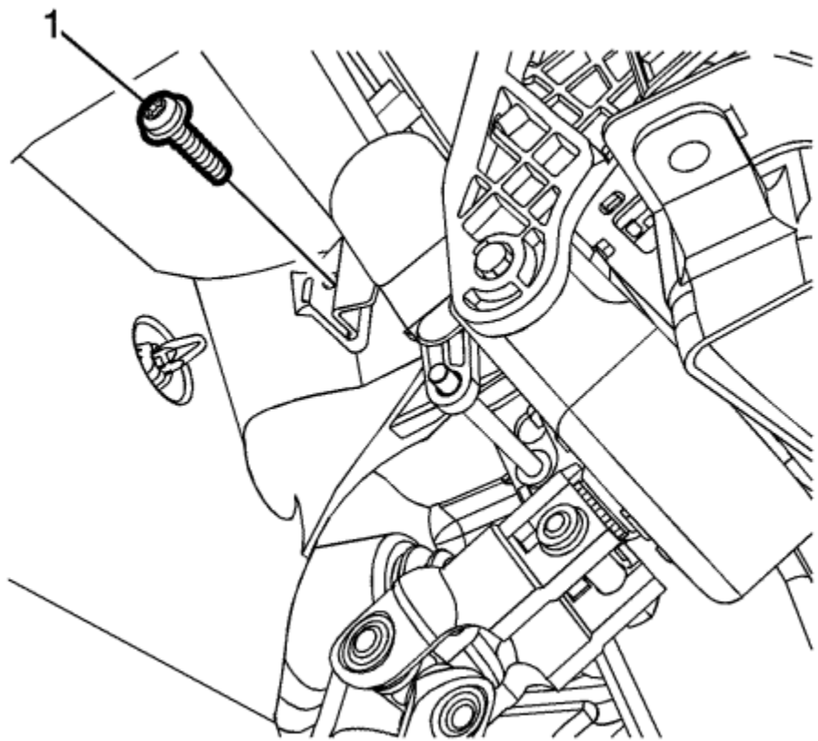

3. Remove the 2 electronic brake control position sensor bolts (1).

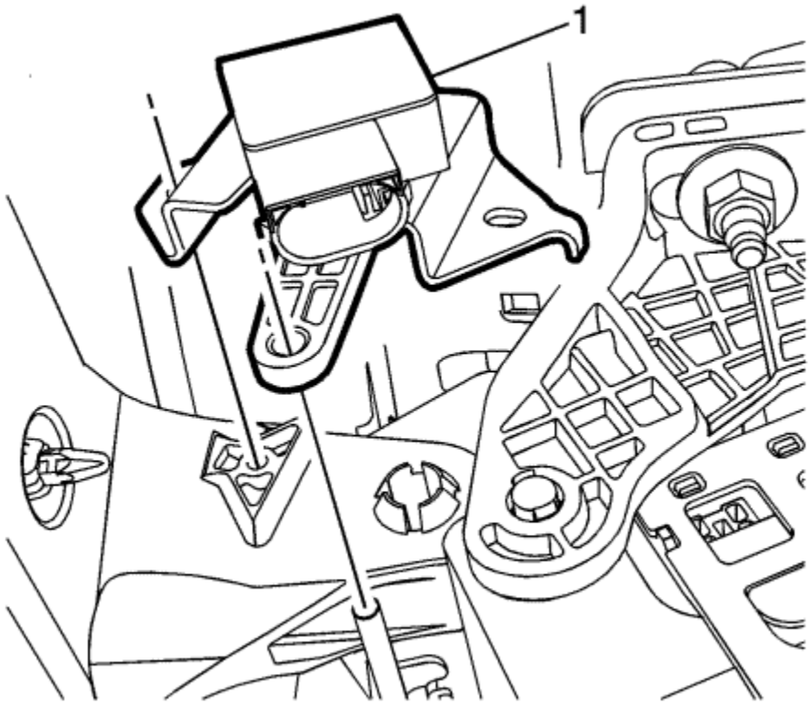

4. Remove the electronic brake control position sensor (1).

Installation Procedure

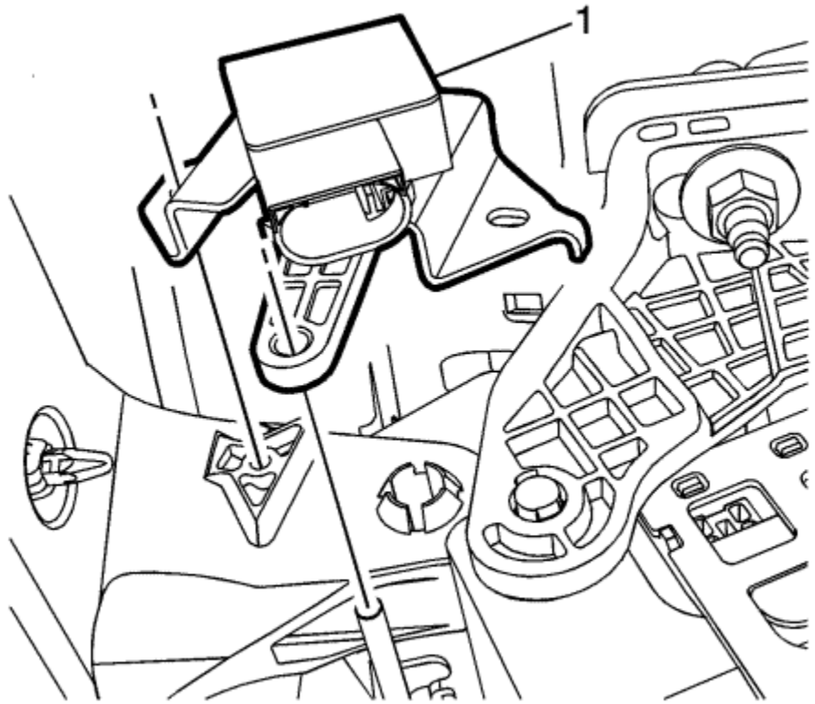

Note: Ensure the electronic brake control position sensor arm is properly located on the pin of the brake pedal.

1. Install the electronic brake control position sensor (1).

   Caution: Refer to Fastener Caution in the Preface section.

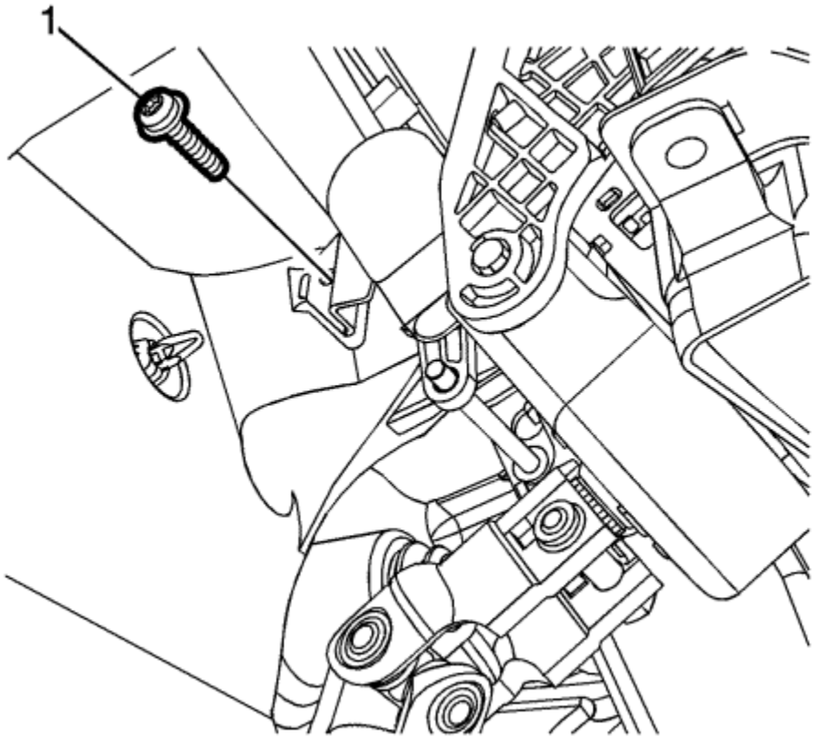

2. Install the 2 electronic brake control position sensor bolts (1) and tighten to **9 N·m (80 lb in)**.
3. Connect the electronic brake control position sensor electrical connector.
4. Install the driver side inflatable restraint lower module. Refer to Inflatable Restraint Instrument Panel Lower Module Replacement - Driver Side .
5. Inspect the battery state of charge. Refer to Battery Inspection/Test .
6. If necessary, connect a battery charger to the 12V battery. Refer to Battery Charging .
7. Install a scan tool to the vehicle.

Note: The power button must remain in the ON position during this procedure.

8. Place the power button in the ON position.
9. Using the scan tool, perform the following steps:
   9.1. Select Diagnostics
   9.2. Select the appropriate vehicle information
   9.3. Select Chassis
   9.4. Select Electronic Brake Control Module (EBCM)
   9.5. Select Module Setup
   9.6. Select Electronic Brake Control Position Relearn and follow the instructions on the scan tool

© Copyright Chevrolet. All rights reserved

Brake Pressure Modulator Valve Pressure Sensor Calibration

The brake pressure sensor does not require calibration often. Calibration of the brake pressure sensor might be required after certain service procedures are performed. Some of these procedures are as follows:

- Electronic brake control module (EBCM) replacement.
- Brake pressure modulator valve assembly replacement

The Brake Pressure Sensor Calibration procedure can be completed with a scan tool using the following steps:

1. Place the power button in the ON/RUN position.
2. Place the transmission in PARK
3. Release the brake pedal.
4. Install the scan tool to the data link connector.
5. Select Brake Pressure Sensor Calibration in the EBCM Configuration/Reset Functions list.
6. Follow the scan tool directions to complete the calibration procedure.
7. Clear any DTCs that may be set.

&#169© Copyright Chevrolet. All rights reserved

Brake Pressure Modulator Valve Bracket Replacement

Removal Procedure

1. Without separating the brake pressure modulator valve (BPMV) from the electronic brake control module (EBCM), remove the EBCM. Refer to Electronic Brake Control Module Replacement .

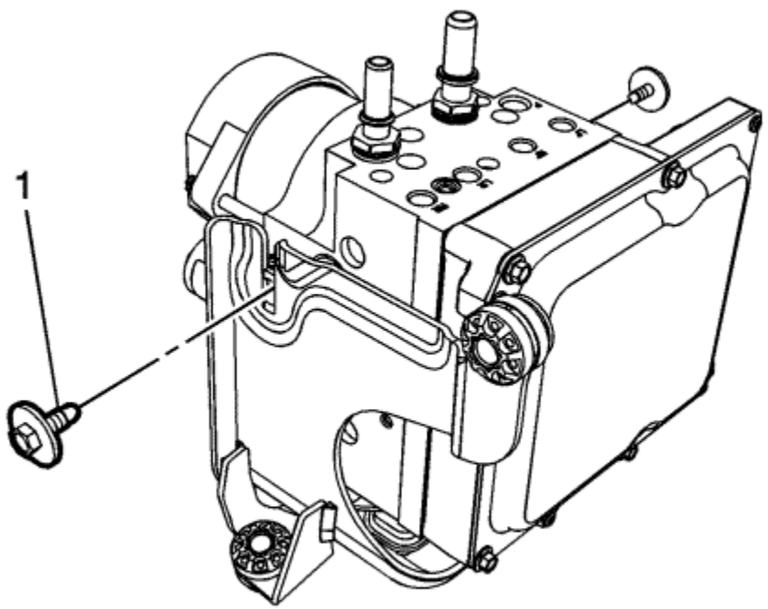

2. Remove the 2 BPMV bolts (1).

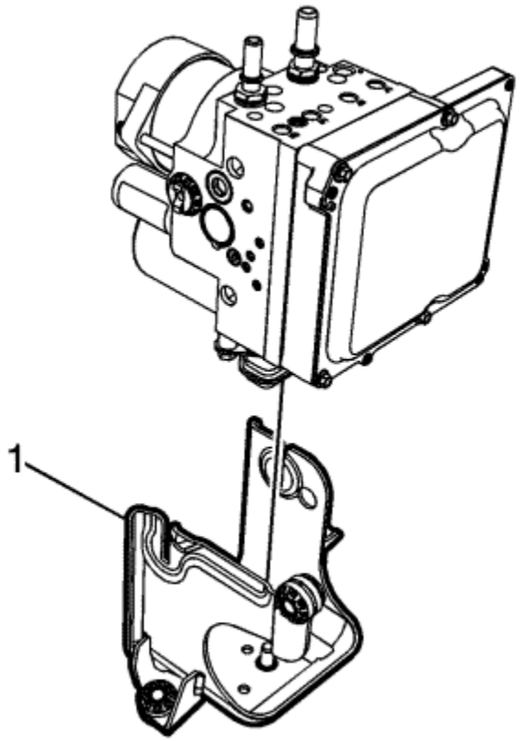

3. Remove the bracket (1) from the BPMV/EBCM assembly.

Installation Procedure

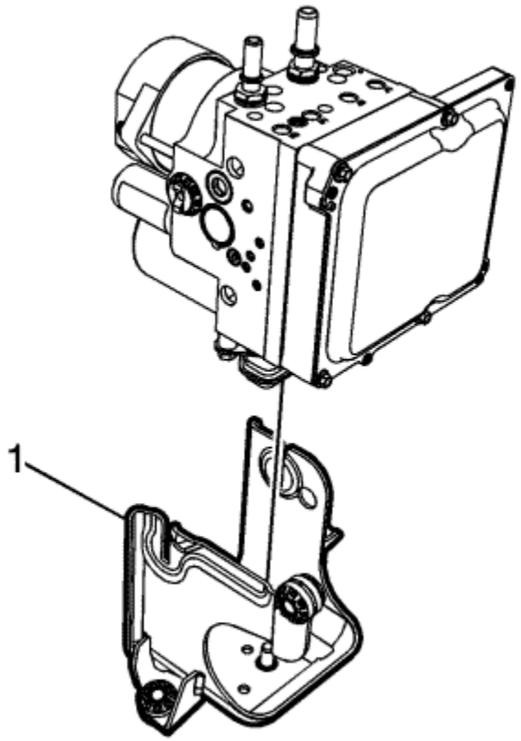

1. Install the bracket (1) to the BPMV/EBCM assembly.

   Caution: Refer to Fastener Caution in the Preface section.

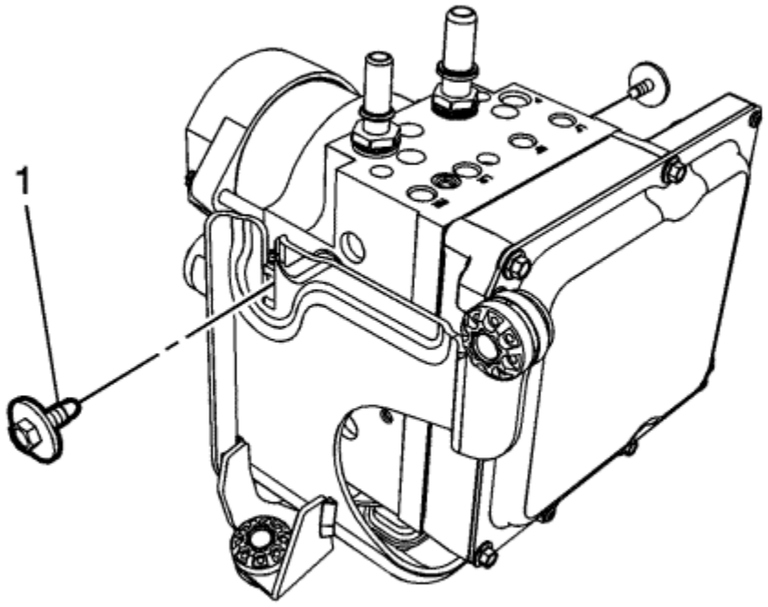

2. Install the 2 BPMV bolts (1) and tighten to **8 N·m (71 lb in)**.
3. Install the BPMV/EBCM assembly. Refer to Electronic Brake Control Module Replacement .

© Copyright Chevrolet. All rights reserved

Front Wheel Speed Sensor Replacement

Removal Procedure

Warning: Refer to Brake Dust Warning in the Preface section.

Danger: Do not use a service jack in locations other than those specified to lift this vehicle. Lifting the vehicle with a jack in those other locations could cause the vehicle to slip off the jack and roll; this could cause injury or death.

1. Raise and support the vehicle. Refer to Lifting and Jacking the Vehicle .
2. Remove the tyre and wheel assembly. Refer to Tyre and Wheel Removal and Installation .
3. Remove the 11 lower fasteners securing the front wheelhouse liner front liner to the frame. Refer to Front Wheelhouse Front Liner Replacement .
4. Pull the front wheelhouse liner away from the frame to access the wheel speed sensor electrical connector.

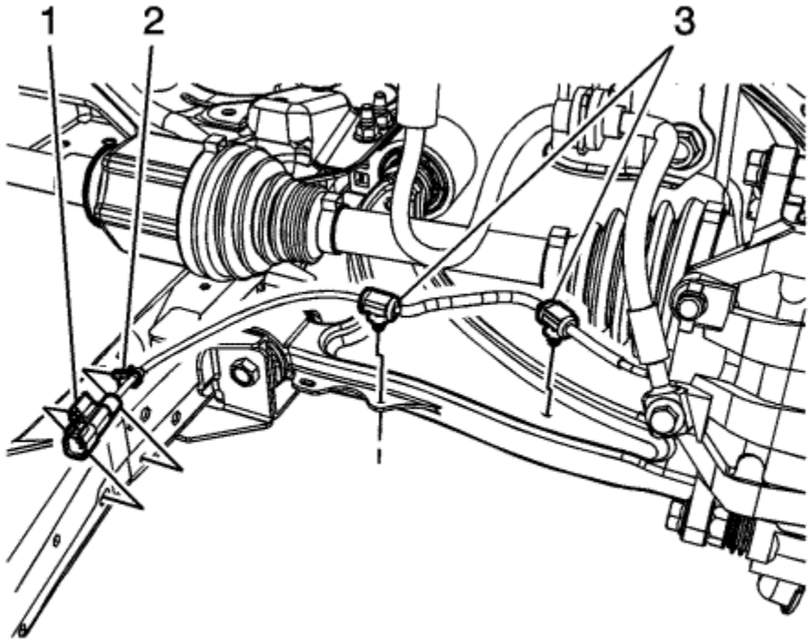

5. Disconnect the wheel speed sensor electrical connector (1) and release the connector from the frame.
6. Release the harness clip (2) from the frame.
7. Release the harness clips (3) from the lower control arm.

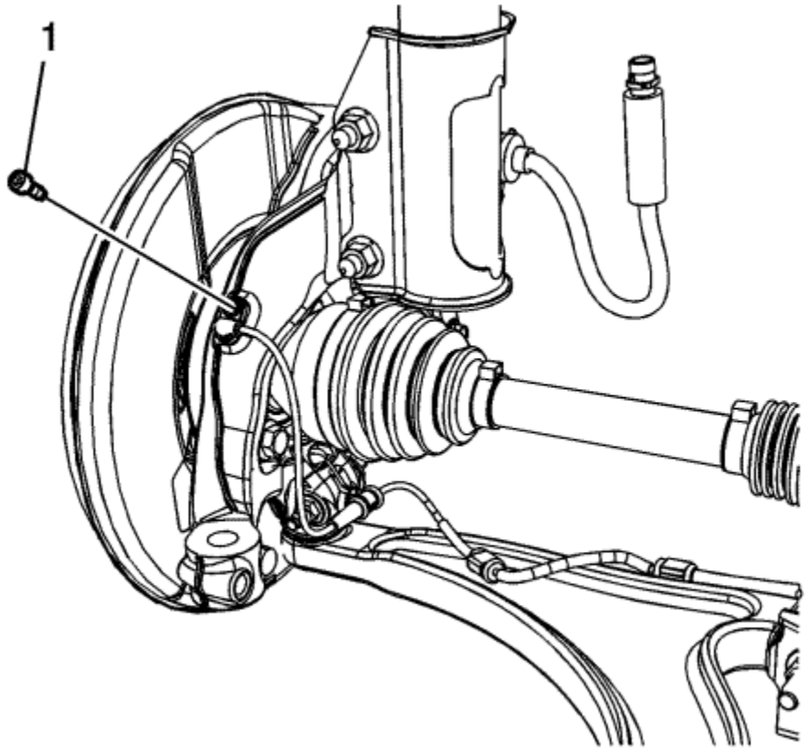

8. Clean the wheel speed sensor mounting area on the steering knuckle of any accumulated dirt and debris.
9. Remove the wheel speed sensor bolt (1).

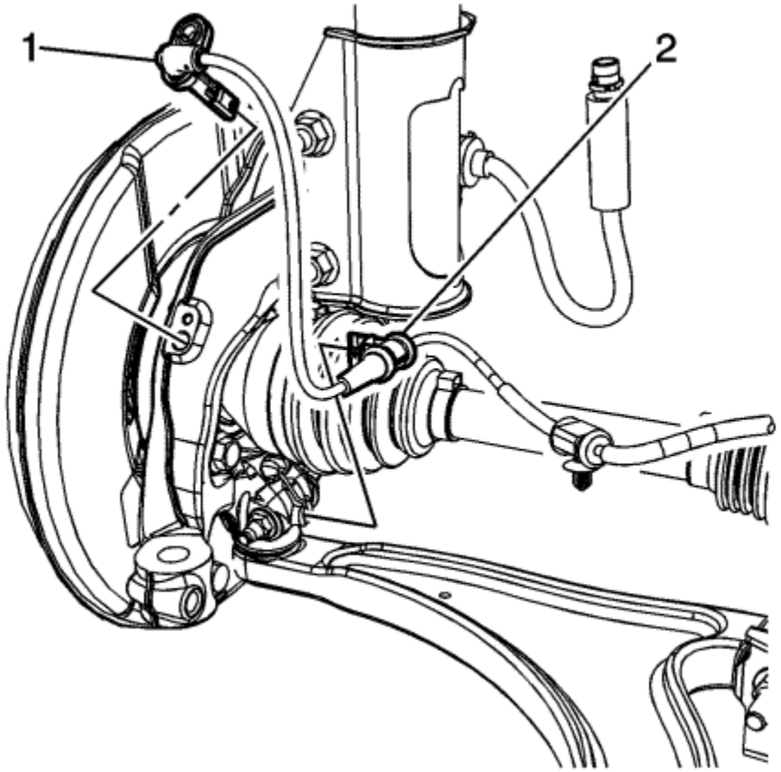

10. Remove the wheel speed sensor (1) from the steering knuckle.
11. Release the harness clip (2) from the steering knuckle and remove the wheel speed sensor.

Installation Procedure

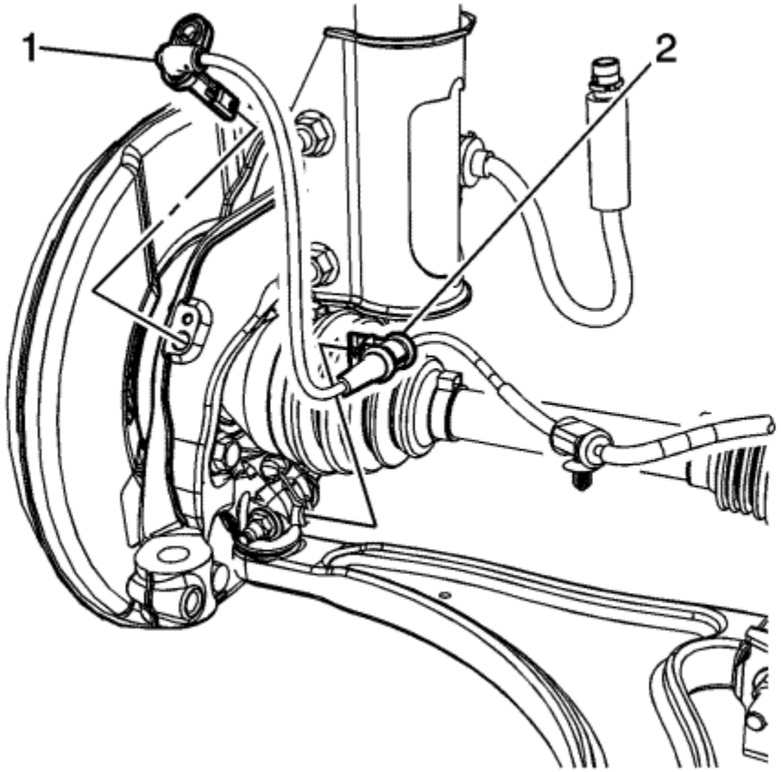

1. Install the wheel speed sensor (1) to the steering knuckle.
2. Install the harness clip (2) to the steering knuckle.

Caution: Refer to Fastener Caution in the Preface section.

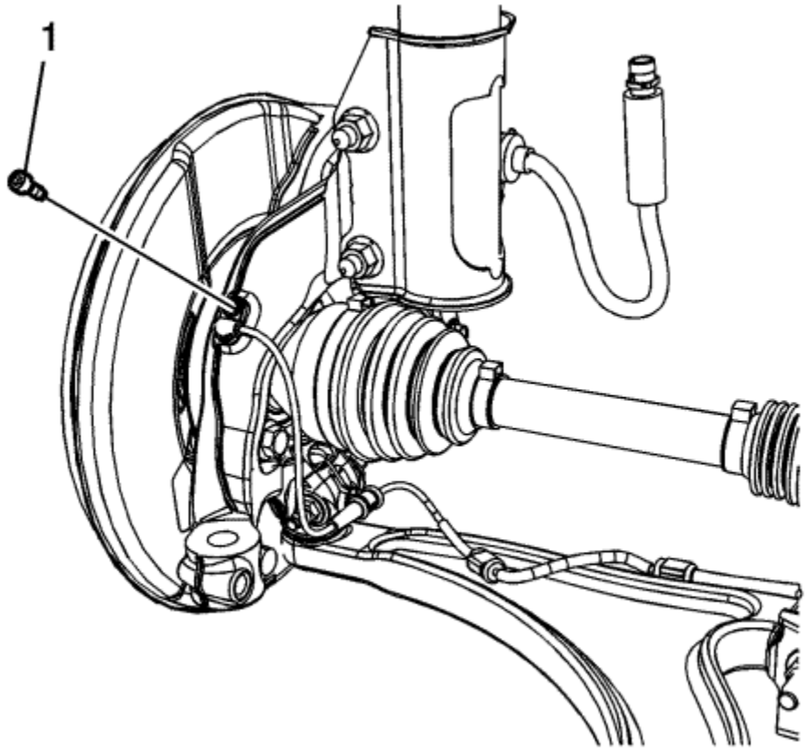

3. Install the wheel speed sensor bolt (1) and tighten to **10 N·m (89 lb in)**.

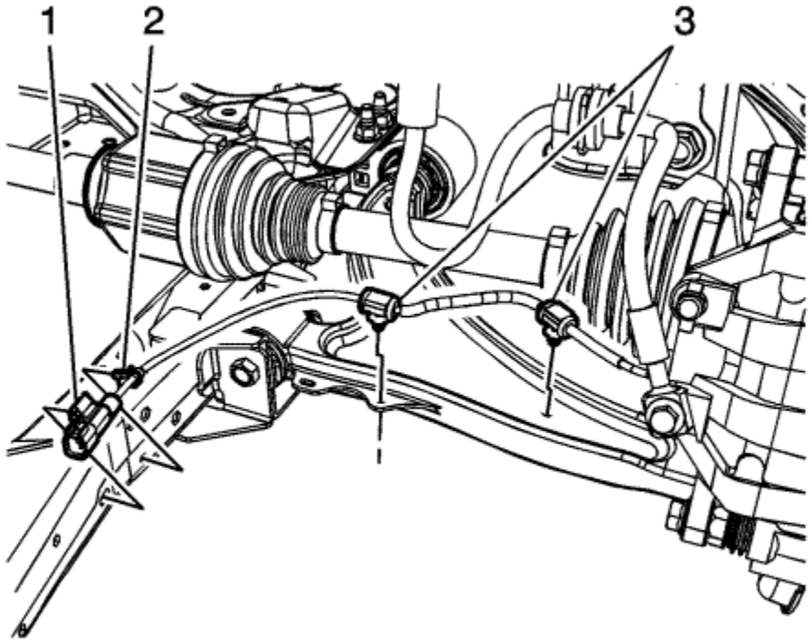

4. Connect the wheel speed sensor electrical connector (1) and secure the connector to the frame.
5. Install the harness clip (2) to the frame.
6. Install the harness clips (3) to the lower control arm.
7. Install the 11 lower fasteners securing the front wheelhouse liner front liner to the frame. Refer to Front Wheelhouse Front Liner Replacement .
8. Install the tyre and wheel assembly. Refer to Tyre and Wheel Removal and Installation .
9. Perform the Diagnostic System Check - Vehicle .

© Copyright Chevrolet. All rights reserved

Rear Wheel Speed Sensor Replacement

Removal Procedure

Warning: Refer to Brake Dust Warning in the Preface section.

Danger: Do not use a service jack in locations other than those specified to lift this vehicle. Lifting the vehicle with a jack in those other locations could cause the vehicle to slip off the jack and roll; this could cause injury or death.

1. Raise and support the vehicle. Refer to Lifting and Jacking the Vehicle .
2. Remove the tyre and wheel assembly. Refer to Tyre and Wheel Removal and Installation .
3. Clean the wheel speed sensor mounting area on the suspension knuckle of any accumulated dirt and debris.

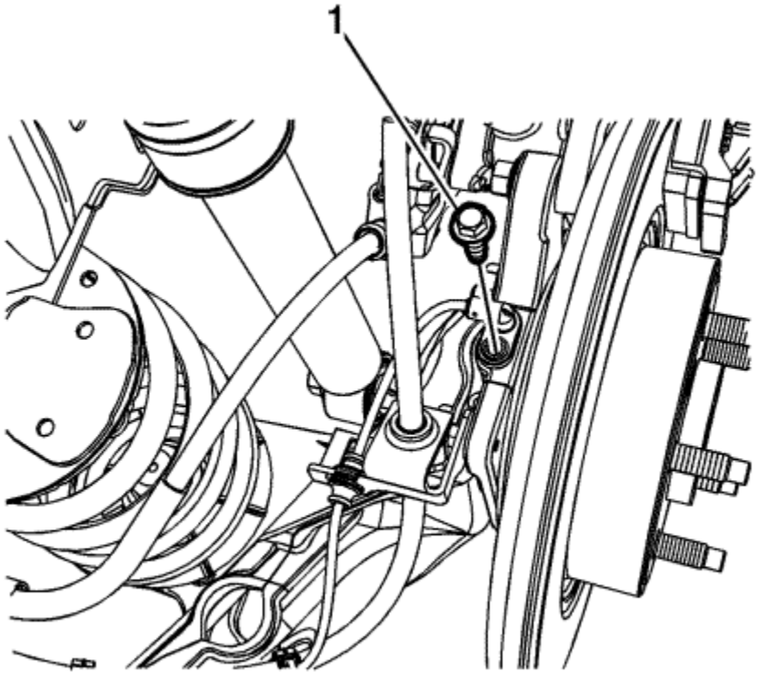

4. Remove the wheel speed sensor bolt (1).

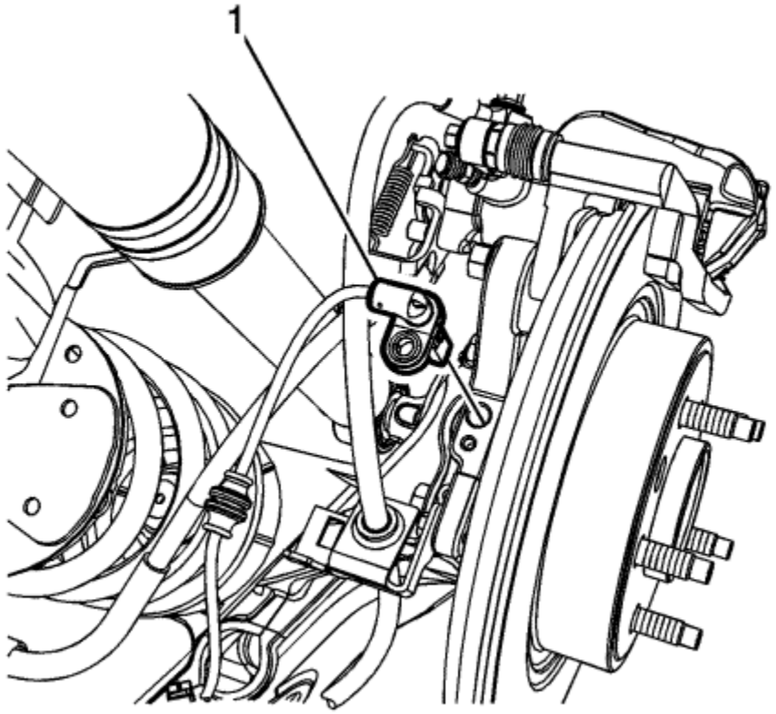

5. Remove the wheel speed sensor (1) from the suspension knuckle.

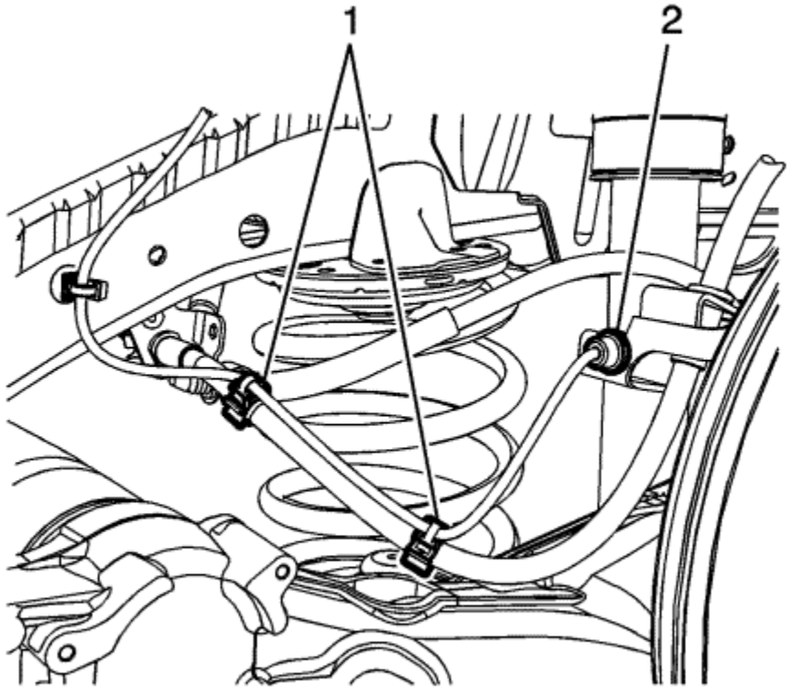

6. Release the wheel speed sensor harness from the rear brake hose retainers (1) and the brake hose bracket (2).

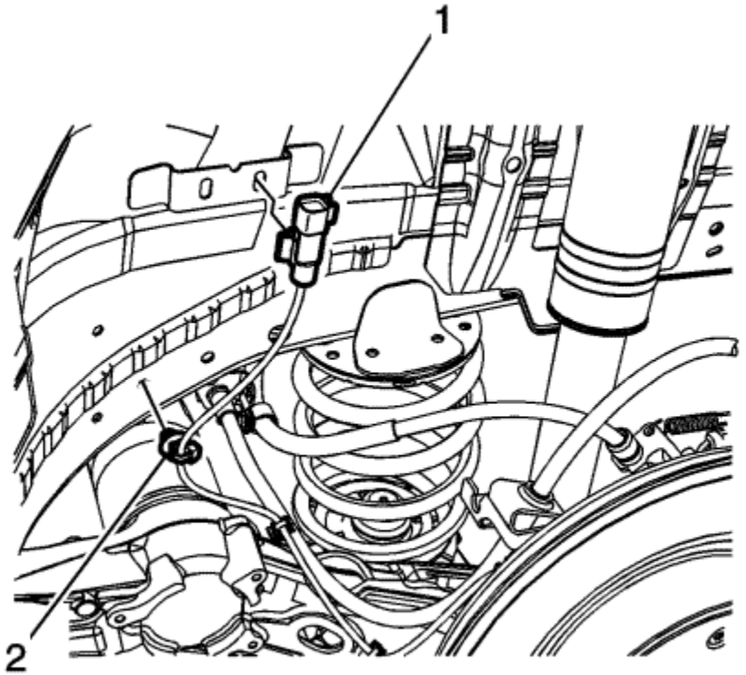

7. Remove the lower forward wheelhouse liner pushpin, lift the wheelhouse liner away from the body slightly and disconnect the wheel speed sensor electrical connector (1).
8. Release the wheel speed sensor harness retainer (2) from the frame rail and remove the wheel speed sensor.

Installation Procedure

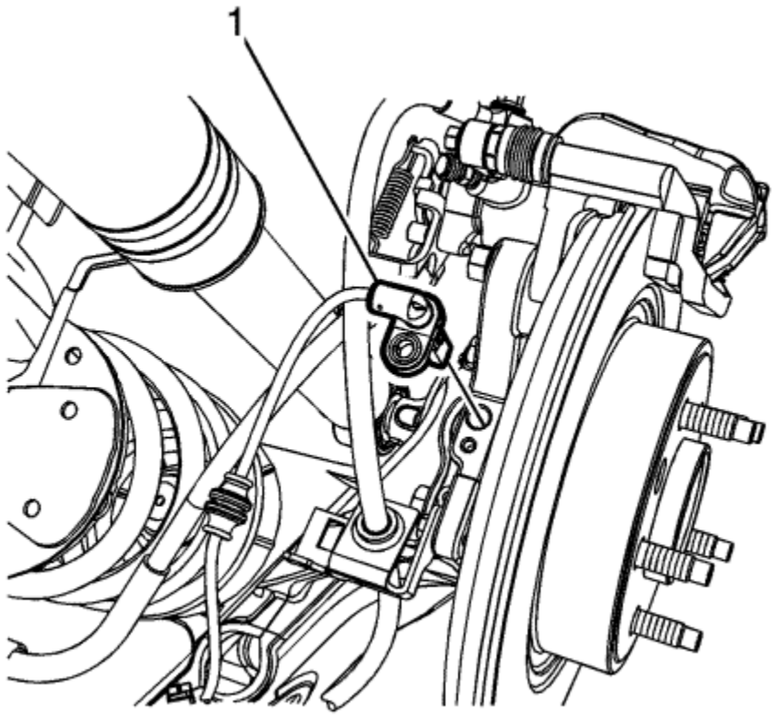

1. Install the wheel speed sensor (1) to the suspension knuckle.

   Caution: Refer to Fastener Caution in the Preface section.

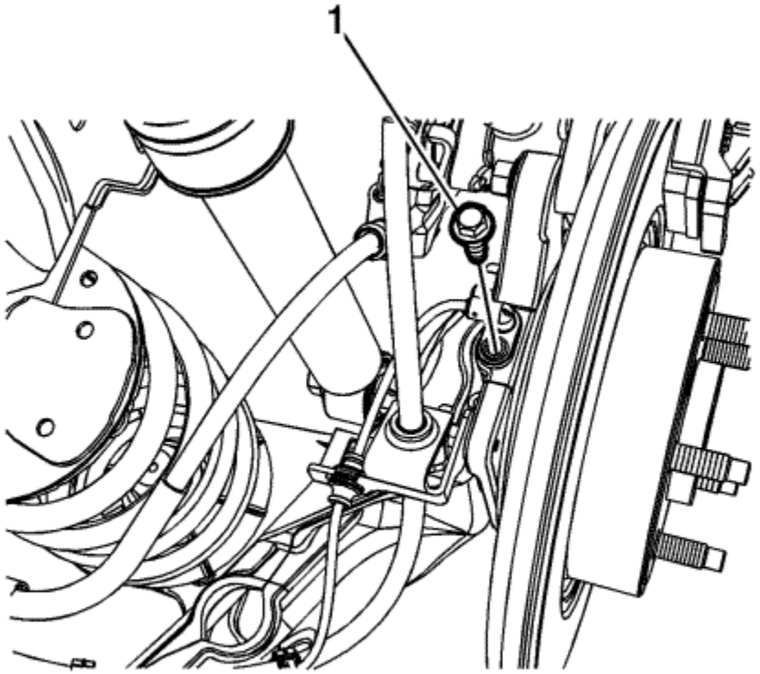

2. Install the wheel speed sensor bolt (1) and tighten to **9 N·m (80 lb in)**.

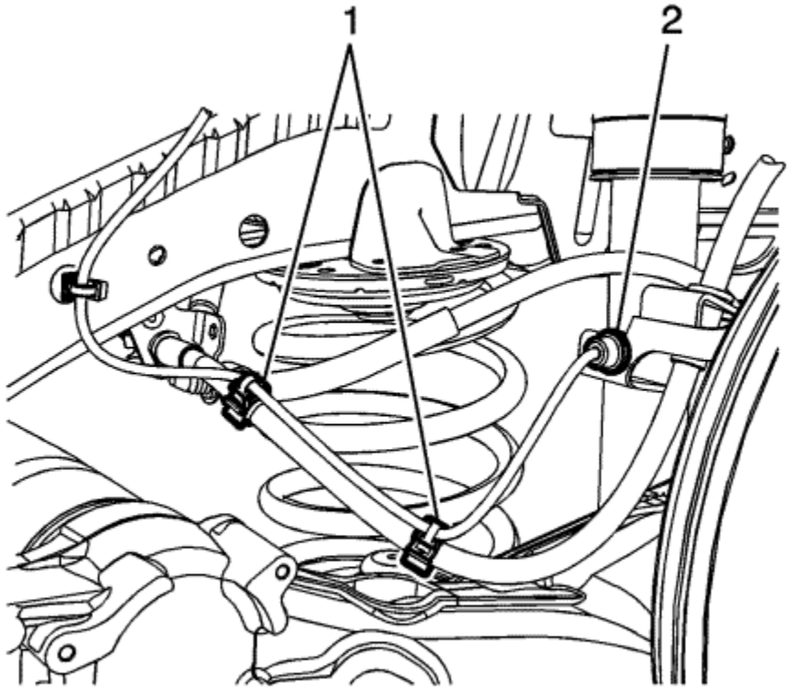

3. Install the wheel speed sensor harness to the rear brake hose retainers (1) and the brake hose bracket (2).

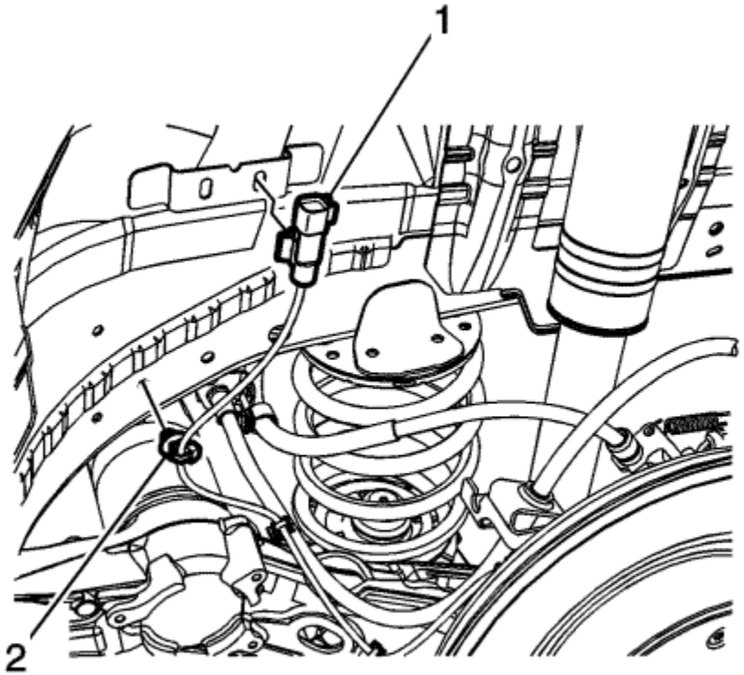

4. Lift the wheelhouse liner away from the body slightly and connect the wheel speed sensor electrical connector (1).
5. Install the forward lower wheelhouse liner pushpin.
6. Install the wheel speed sensor harness retainer (2) to the frame rail.
7. Install the tyre and wheel assembly. Refer to Tyre and Wheel Removal and Installation .
8. Perform the Diagnostic System Check - Vehicle .

© Copyright Chevrolet. All rights reserved

Vehicle Yaw Sensor Learn

The yaw sensor does not require calibration often. Calibration of the yaw rate sensor might be required after certain service procedures are performed. Some of these procedures are as follows:

- Electronic brake control module (EBCM) replacement
- Yaw rate sensor replacement

The Yaw Rate Sensor Learn procedure can be completed with a scan tool using the following steps:

1. Place vehicle on a level surface
2. Apply the hand brake, or set the transmission in the P position.
3. Install the scan tool to the data link connector.
4. Vehicle in Service Mode, engine OFF
5. Select Yaw Rate Sensor Reset in the Multi-axis Acceleration Sensor Module Configuration/Reset Functions list.
6. Follow the scan tool directions to complete the calibration procedure.
7. Select Yaw Rate Sensor Learn in the Multi-axis Acceleration Sensor Module Configuration/Reset Functions list.
8. Follow the scan tool directions to complete the calibration procedure.
9. Select Yaw Rate Sensor Learn in the EBCM Configuration/Reset Functions list.
10. Follow the scan tool directions to complete the calibration procedure.
11. Clear any DTCs that may be set.

&#169© Copyright Chevrolet. All rights reserved

Vehicle Yaw Sensor with Vehicle Lateral and Longitudinal Accelerometer Replacement

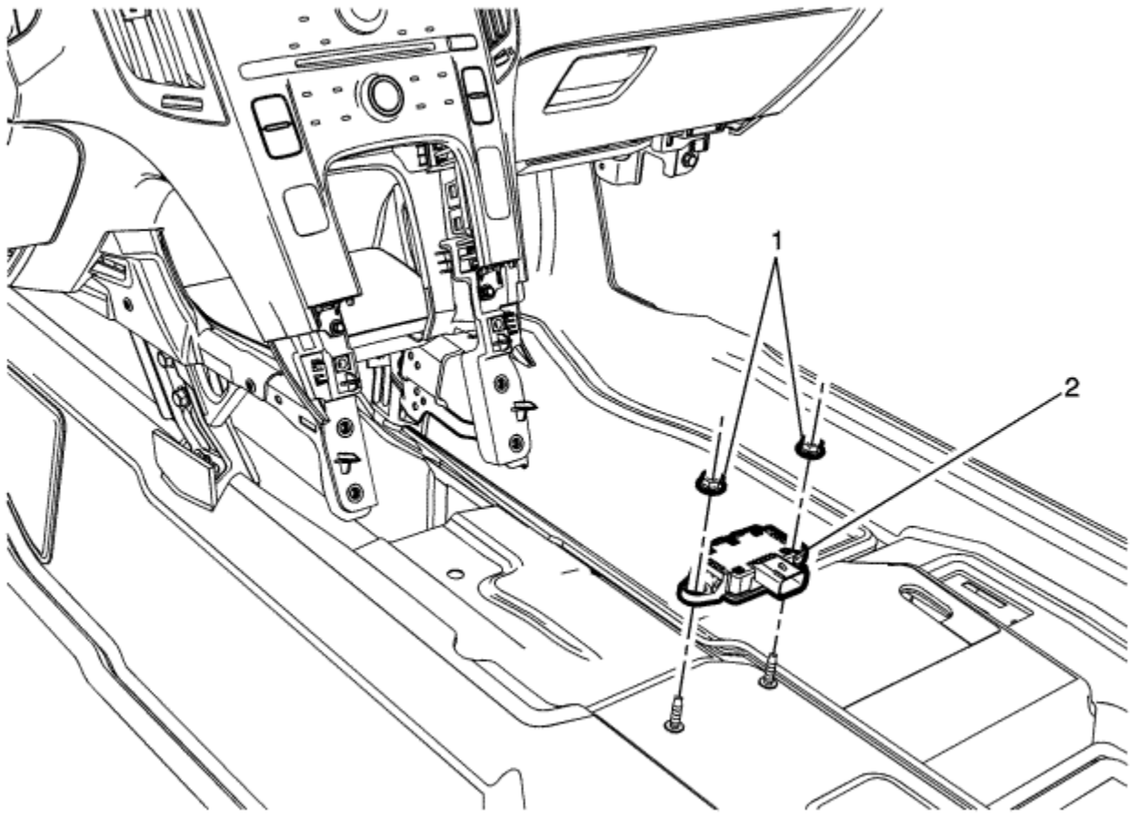

Callout	Component Name
Preliminary Procedures 1. Turn the ignition OFF. 2. Remove the front floor console. Refer to Front Floor Console Replacement .	

1	Yaw Sensor Nut **Caution:** Refer to Fastener Caution in the Preface section. **Tighten** 9 N·m (80 lb in)
2	Vehicle Yaw Sensor with Vehicle Lateral and Longitudinal Accelerometer **Procedure** 1. Disconnect the electrical connector. 2. After the installation is complete, perform the Vehicle Yaw Sensor Learn

© Copyright Chevrolet. All rights reserved

ABS Description and Operation

This vehicle is equipped with a TRW ABS/SCB/TC/VSC module.

This module provides the following vehicle performance enhancement systems:

- Antilock Brake System (ABS)
- Slip Control Boost (SCB)
- Master Cylinder Assembly
- Electronic Brake Distribution
- Traction Control (TC)
- Vehicle Stability Control (VSC)

The following components are involved in the operation of the above systems:

- Electronic brake control module (EBCM)--The EBCM controls the system functions and detects failures.
  The EBCM contains the following components:
  - System relay--The system relay is internal to the EBCM. The system relay is energised when the power button is placed in ON/RUN or a remote function actuation (RFA) commands remote START. The system relay supplies battery positive voltage to the valve solenoids and to the ABS pump motor. This voltage is referred to as system voltage.
  - Solenoids--The solenoids are commanded ON and OFF by the EBCM to operate the appropriate valves in the brake pressure modulator valve.
- Brake pressure modulator valve--The brake pressure modulator valve uses a 4-circuit configuration to control hydraulic pressure to each wheel independently.
  The brake pressure modulator valve contains the following components:
  - ABS pump motor and pump
  - Isolation valves
  - Dump valves
  - High pressure accumulator
  - Electronic hydraulic control unit
- Steering angle sensor - The EBCM receives serial data message inputs from the steering angle sensor. The steering angle sensor signal is used to calculate the desired yaw rate.
- Traction control switch - Traction control and stability control are manually disabled or enabled by pressing the traction control switch.
- Multi-axis acceleration sensor--The yaw rate, lateral acceleration and longitudinal acceleration sensors are combined into one multi-axis acceleration sensor, external to

the EBCM. The EBCM receives serial data message inputs from the yaw rate, lateral acceleration and longitudinal acceleration sensor and activates stability control depending on multi-axis acceleration sensor input.

- Wheel speed sensors--The wheel speeds are detected by active wheel speed sensors and encoder rings. The encoder ring consists of permanent magnets. Each wheel speed sensor receives ignition voltage from the electronic brake control module (EBCM) and provides a DC square wave signal back to the module. As the wheel spins, the EBCM uses the frequency of the square wave signal to calculate the wheel speed.

Slip Control Boost Overview

The slip control boost system is a hydraulic braking system which is capable of supplying boosted braking, slip control functions, and regenerative brake blending.

The system is made up of two major assemblies, the master cylinder assemble (no vacuum booster is used), and the electro-hydraulic control unit. Also included are various internal and external sensors used for system control and fault isolation.

The master cylinder assembly is made up of a reservoir and a master cylinder with primary and secondary pistons.

The electro-hydraulic control unit is used to electronically control pressure at the wheels. A pump and accumulator supply hydraulic brake fluid pressure to perform braking applications. A proportional supply valve controls the flow and pressure of fluid from the accumulator to the brakes. Standard digital slip control valves and, in some cases, proportional versions of them, are used to control pressures at the brakes independently for slip control. The regenerative axle isolation valves along with the proportional relief valve are used in regenerative brake blending situations. A simulator, consisting of a plunger, spring, orifice, and check valve provide the force and travel feedback to the driver through the master cylinder. There are four internal pressure transducers, master cylinder pressure, high pressure accumulator, boost pressure, and regenerative axle circuit pressure sensors.

General Operation

The driver applies the pedal and thereby builds pressure in the primary chamber of the master cylinder with the primary piston. The fluid from the primary chamber is transmitted from the master cylinder by the brake tube to the electro-hydraulic control unit through the orifice and check valve and into the simulator chamber. With the slip control boost system active and working normally, the fluid from the primary master cylinder chamber does not get applied to the wheel brakes but to the simulator. The pedal simulator spring, the orifice, and the check valve combine to affect a force/travel characteristic that feels smooth, normal, and controllable to the driver. A pressure transducer on the primary master cylinder chamber/pedal simulator (Master Cylinder Pressure), a pedal travel sensor on the input piston assembly, and the brake switch are inputs into the electronic control unit. These inputs are used to determine the driver's braking intent which is used to control the torque applied to the wheels.

Base Brakes (Friction Braking)

The braking torque applied to the wheels in proportion to the driver's braking intent is achieved with a combination of regenerative braking from the powertrain and hydraulically applied friction braking controlled by the electro-hydraulic control unit. The friction braking is achieved by the electro-hydraulic control unit controlling a combination of valves in a way that allows accumulator pressure to be used to actuate the wheel brakes. The accumulator is maintained at pressure during normal operation by the pump and motor, independent of the brake being applied. The pressure built in the braking circuits by the electro-hydraulic control unit by means of the boost valve is applied directly to the rear brakes. The front circuit pressure, however, are applied to the master cylinder secondary pistons, and they in turn apply pressure to the front while brakes. The slip control boost system is designed and used with its electro-hydraulic control unit and master cylinder primary and secondary pistons configured as they are for fail-safe purposes.

Fail-Safe System Operation (Four or Two Wheel Push Through)

With the system active, and working normally, the normally open and normally closed valves become active when the driver steps on the pedal, and friction braking is desired. This opens up the simulator to the fluid input from the master cylinder, and allows the boost valve to build pressure in the boost circuit that will actuate the wheel brakes. If the brake is applied with no power, or if the system detects a critical failure, these valves are not energised, resulting in a fail-safe system operation (push through) that allows the driver to push primary chamber fluid directly into the braking/boost circuits of all four wheels (four wheel push through). If a hydraulic failure occurs in the boost circuit a further pedal input will result in the primary piston of the master cylinder directly contracting the secondary pistons and applying pressure to the front hydraulic circuits (two wheel push through). Slip control functions are done by controlling the four isolation valves and the four dump valves in a manner common to how slip control functions are done in standard systems and is not described here.

Regenerative Brake Blending

Regenerative brake blending is done by using the driver braking intent information to request a powertrain braking torque, by receiving feedback about how much powertrain torque is applied, and controlling wheel brake pressures to fulfill the braking desired along with the powertrain regenerative pressure applied. To maximise the regenerative powertrain energy recovery during braking (while still maintaining suitable brake balance), the rear brake pressures may be reduced as compared proportionally to the fronts brakes. This pressure reduction is achieved by controlling the rear isolation valves in conjunction with the pressure reducing valve, which both controlled proportionally. Feedback from a pressure transducer (regenerative axle pressure) is used for this control. The boost valve itself controls the pressure applied to the front wheel brakes during regenerative brake blending.

Accumulator and Pump Motor Operations

The accumulator is charged independently of the brakes being applied, meaning that the motor may run at any time when the vehicle is powered. The pressure transducer (High Pressure Accumulator) is used by the EBCM to determine when the accumulator pressure is low. The EBCM controls the motor such that it runs from the time when the accumulator pressure is seen to be low until the high pressure accumulator is fully charged. A dual pump arrangement is used and is driven by an electronically commutator motor.

EBCM Controls

The EBCM controls the current to the boost valve so that pressure can be applied to the wheel brakes. The boost valve is a spool type valve which is referenced to the controlled pressure so that for a given current applied, a specific pressure is expected. The boost valve controls the pressure apply from the accumulator through the rear isolation valves directly to the rear wheel brakes, and through the front isolation valves, to the individual front pressure chambers behind the secondary pistons in the master cylinder, which in turn apply pressure to the front wheel brakes.

Base Brake Valves (Normal Open)

The normally open base brake valve is used to keep boost pressure from feeding back to the master cylinder which would increase the force back to the pedal. It closes off a passage which is used to apply pressure to the wheel brakes from the master cylinder in the case of a system failure. In this case the system failure referred to is one which results in a control mode known as push through. In normal operation the normally open base brake valve is on (closed) during a boost pressure apply event, and is left off (open) during failed system operation.

Base Brake Valves (Normal Closed)

The normally closed base brake valve is used to close off a passage which allows fluid from the back side (spring side) of the simulator and from the tank port of the boost valve to exit to the reservoir. In normal braking, turning this valve on (opening) allows the simulator to compress the spring and function normally. During failed system operation (push-through) the valve is left off (closed) keeping fluid from exiting the back side of the simulator, which in turn keeps master cylinder fluid from entering the front side of the simulator. In this way, fluid from the master cylinder during failed system, and push through operation is applied only to the wheel brakes, and not lost in the simulator. In normal operation the valve is turned on (opened).

Vehicle Stability Control

Stability control provides added stability during aggressive manoeuvres. Yaw rate is the rate of rotation about the vehicle's vertical axis. The stability control is activated when the EBCM determines that the desired yaw rate does not match the actual yaw rate as measured by the yaw rate sensor.

The desired yaw rate is calculated by the EBCM using the following inputs:

- Steering wheel position
- Vehicle speed
- Lateral acceleration

The difference between the desired yaw rate and the actual yaw rate is the yaw rate error, which is a measurement of oversteer or understeer. When a yaw rate error is detected, the EBCM attempts to correct the vehicle's yaw motion by applying brake pressure to one or more of the wheels. The amount of applied brake pressure varies, depending on the correction required.

Power-up Self-Test

The electronic brake control module (EBCM) is able to detect many malfunctions whenever the ignition is ON. However, certain failures cannot be detected unless active diagnostic tests are performed on the components. Shorted solenoid coil or motor windings, for example, cannot be detected until the components are commanded ON by the EBCM. Therefore, a power-up self-test is required at the beginning of each ignition cycle to verify correct operation of components before the various control systems can be enabled. The EBCM performs the power-up self-test when the ignition is first turned ON. The system relay, solenoids and the antilock brake system (ABS) pump motor are commanded ON and OFF to verify proper operation and the EBCM verifies the ability to return the system to base braking in the event of a failure. The power-up self-test may be heard by the driver, depending on how soon the engine is cranked and started after turning ON the ignition.

United Nations Economic Commission for Europe Regulation Number 13 (ECE 13) Response

The electronic brake control module (EBCM) illuminates the antilock brake system (ABS) indicator when a malfunction which disables ABS is detected. Usually, the ABS indicator is turned OFF during the following ignition cycle unless the fault is detected during that ignition cycle. However, the setting of a wheel speed sensor related DTC may cause the ABS indicator to remain illuminated during the following ignition cycle until the vehicle is operated at a speed greater than 13 km/h (8 mph) or, occasionally, 64 km/h (40 mph), depending on which DTC sets. This allows the EBCM to verify that no malfunction exists, before turning OFF the ABS indicator. It is important to verify that United Nations Economic Commission for Europe regulation number 13 (ECE 13) is not the cause of an ABS indicator which is illuminated when no DTCs are set, before attempting to diagnose other possible causes.

Driver Information Indicators

The following indicators are used to inform the driver of several different factors.

Brake Warning Indicator

The instrument panel cluster illuminates the brake warning indicator when the following occurs.

- The body control module (BCM) detects that the hand brake is engaged. The instrument panel cluster receives a serial data message from the BCM requesting illumination. The brake warning indicator flashes at a rate of approximately twice per second when the hand brake is engaged.
- The body control module (BCM) detects a low brake fluid condition or a base brake pressure differential and sends a serial data message to the instrument panel cluster requesting illumination.
- The instrument panel cluster performs the bulb check.
- The EBCM detects an antilock brake system (ABS)-disabling malfunction which also disables electronic brake distribution and sends a serial data message to the instrument panel cluster requesting illumination.

ABS Indicator

The instrument panel cluster illuminates the ABS indicator when the following occurs:

- The electronic brake control module (EBCM) detects an ABS-disabling malfunction and sends a serial data message to the instrument panel cluster requesting illumination.
- The instrument panel cluster performs the bulb check.
- The instrument panel cluster detects a loss of serial data communication with the EBCM.
- A DTC is set during the previous ignition cycle which requires a United Nations Economic Commission for Europe regulation number 13 (ECE 13) response at the beginning of the current ignition cycle. The EBCM sends a serial data message to the instrument panel cluster requesting illumination.

Traction Control/Stability Control Indicator

The instrument cluster turns the traction control/stability control indicator ON when the following occurs:

- The electronic brake control module (EBCM) detects an ABS-disabling malfunction and sends a serial data message to the instrument panel cluster requesting illumination.
- The instrument panel cluster performs the bulb check.
- The instrument panel cluster detects a loss of serial data communication with the EBCM.
- A DTC is set during the previous ignition cycle which requires a United Nations Economic Commission for Europe regulation number 13 (ECE 13) response at the beginning of the current ignition cycle. The EBCM sends a serial data message to the instrument panel cluster requesting illumination.

&#169© Copyright Chevrolet. All rights reserved

Special Tools

Illustration	Tool Number/ Description
	CH 29532-A J 29532-A Pressure Brake Bleeder
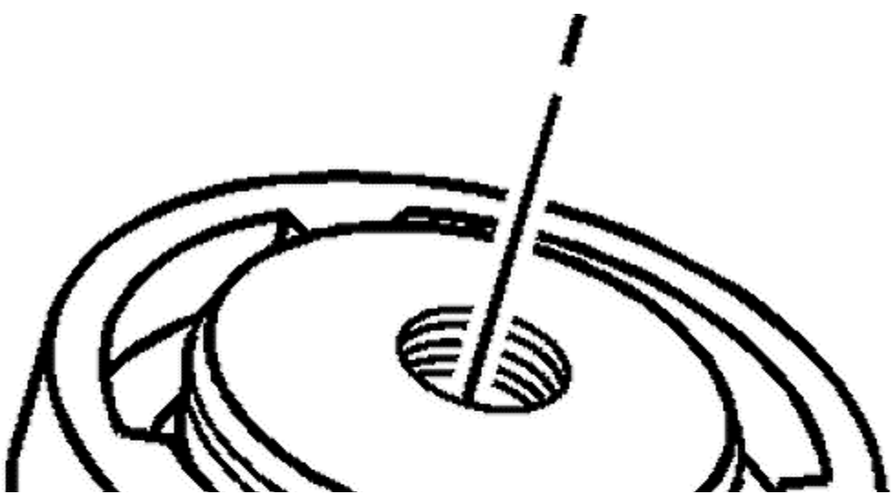	

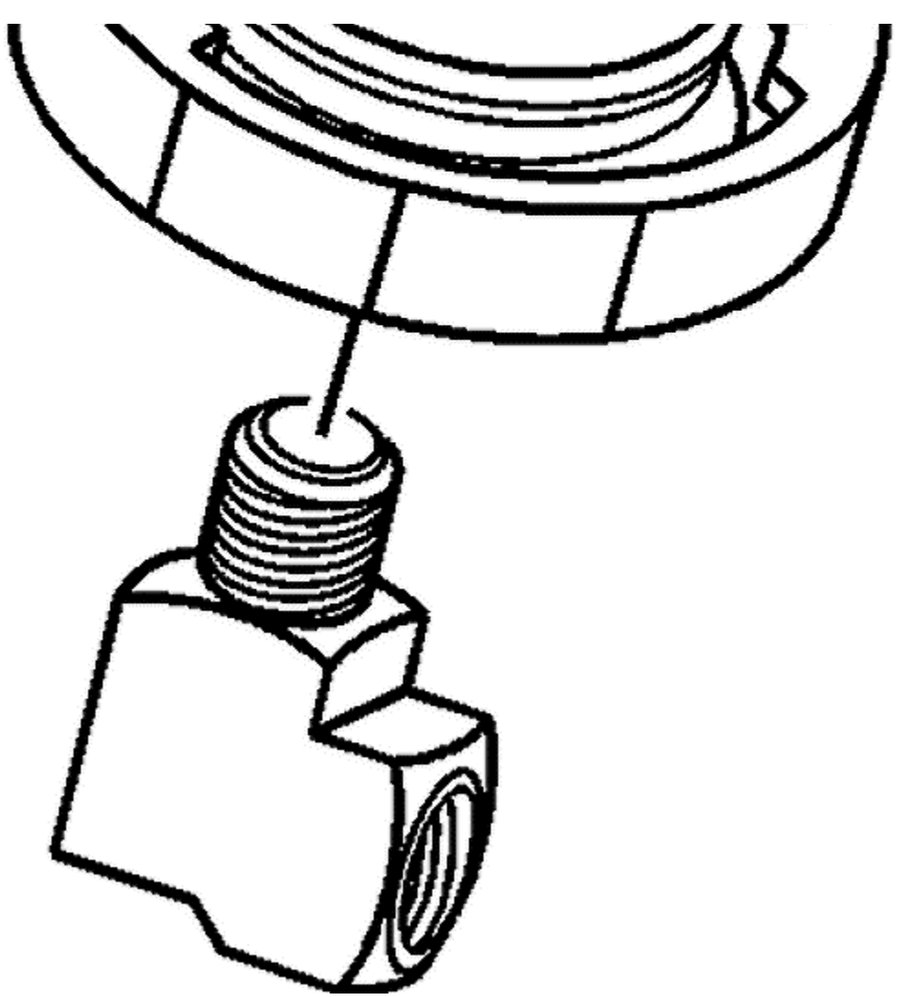

CH 35589-A

J 35589-A

Brake Pressure Bleeder Adapter

© Copyright Chevrolet. All rights reserved

Fastener Tightening Specifications

Application	Specification	
	Metric	English
Brake Caliper Bleeder Bolt - Front and Rear	17 N·m	13 lb ft
Brake Caliper Bracket Bolt - Front		
First Pass	100 N·m	74 lb ft
Second Pass	60 Degrees	
Final Pass	15 Degrees	
Brake Caliper Bracket Bolt - Rear		
First Pass	90 N·m	67 lb ft
Final Pass	60 Degrees	
Brake Caliper Guide Pin Bolt - Front and Rear	28 N·m	21 lb ft
Brake Hose Fitting Bolt - Front and Rear	40 N·m	30 lb ft
Brake Disc Bolt - Front and Rear	9 N·m	80 lb in

© Copyright Chevrolet. All rights reserved

Disc Brake Component Specifications

Application	Specification	
	Metric	English
Front Brakes		
Brake Pad Minimum Thickness	2.0 mm	0.078 in
Disc Diameter	300.0 mm	11.810 in
Disc Discard Thickness*	23.0 mm	0.905 in
Disc Maximum Allowable Assembled Lateral Runout	0.06 mm	0.002 in
Disc Maximum Allowable Scoring	1.50 mm	0.059 in
Disc Maximum Allowable Thickness Variation	0.025 mm	0.001 in
Disc Minimum Allowable Thickness After Refinish	23.2 mm	0.913 in
Disc Thickness New	26.0 mm	1.023 in
Rear Brakes		
Brake Pad Minimum Thickness	2.0 mm	0.078 in
Disc Diameter	292.0 mm	11.496 in
Disc Discard Thickness*	10 mm	0.393 in
Disc Maximum Allowable Assembled Lateral Runout	0.05 mm	0.002 in
Disc Maximum Allowable Thickness Variation	0.025 mm	0.001 in
Disc Maximum Allowable Scoring	1.50 mm	0.059 in

Disc Minimum Allowable Thickness After Refinish	10.2 mm	0.402 in
Disc Thickness New	12.0 mm	0.472 in
* All brake discs have a minimum thickness dimension cast into them. Replace any disc that is worn or machined below this specification.		

© Copyright Chevrolet. All rights reserved

Adhesives, Fluids, Lubricants, and Sealers

Application	Type of Material	GM Part Number
Hydraulic Brake System	DOT 3 Brake Fluid	Refer to Electronic Parts Catalogue

© Copyright Chevrolet. All rights reserved

Brake Disc Thickness Measurement

Warning: Refer to Brake Dust Warning in the Preface section.

1. If the inboard friction surface of the brake disc is not accessible, reposition and support the calliper with the brake pads. Refer to Front Disc Brake Pads Replacement and/or Rear Disc Brake Pads Replacement .
2. Clean the friction surfaces of the brake disc with methylated spirit, or an equivalent approved brake cleaner.

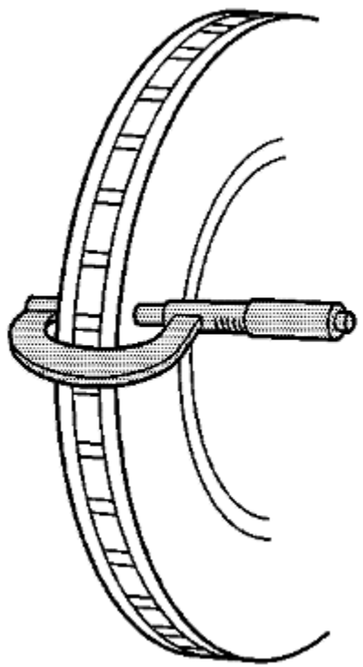

3. Using a micrometer calibrated in thousandths-of-a-millimetre, or ten-thousandths-of-an-inch, measure and record the thickness of the brake disc at four or more points, evenly spaced around the disc.

   Ensure that the measurements are only taken within the friction surfaces and that the micrometer is positioned the same distance from the outer edge of the disc, about 13 mm (½ in), for each measurement.

4. Compare the lowest thickness measurement recorded specifications. Refer to Disc Brake Component Specifications .
5. If the lowest thickness measurement of the brake disc is above the minimum allowable thickness after refinishing specification, the disc may be able to be refinished,

depending upon surface and wear conditions which may be present.

6. If the lowest thickness measurement of the brake disc is at or below the minimum allowable thickness after refinishing specification, the disc may not be refinished.
7. If the lowest thickness measurement of the brake disc is at or below the discard thickness specification, the disc requires replacement.

© Copyright Chevrolet. All rights reserved

Brake Disc Thickness Variation Measurement

Warning: Refer to Brake Dust Warning in the Preface section.

Note: Any disc brake disc that exhibits thickness variation exceeding the maximum acceptable level must be refinished or replaced. Thickness variation exceeding the maximum acceptable level can cause brake pulsation.

1. If the inboard friction surface of the brake disc is not accessible, reposition and support the calliper with the brake pads. Refer to Front Disc Brake Pads Replacement and/or Rear Disc Brake Pads Replacement .
2. Clean the friction surfaces of the brake disc with methylated spirit, or an equivalent approved brake cleaner.

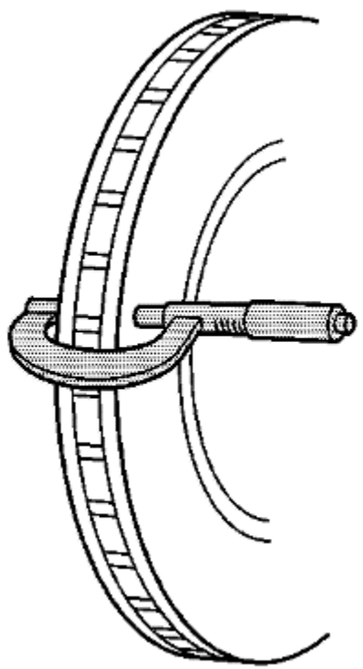

3. Using a micrometer calibrated in thousandths-of-a-millimeter, or ten-thousandths-of-an-inch, measure and record the thickness of the brake disc at 4 or more points, evenly spaced around the disc.

   Ensure that the measurements are only taken within the friction surfaces and that the micrometer is positioned the same distance from the outer edge of the disc, about 13 mm (½ in), for each measurement.

4. Calculate the difference between the highest and lowest thickness measurements recorded to obtain the amount of thickness variation.
5. Compare the thickness variation measurement to the following specification:

   Specification
   Brake disc maximum allowable thickness variation: 0.025 mm (0.001 in)

   Note: Whenever a brake disc is refinished or replaced, the assembled lateral runout (LRO) of the disc must be measured to ensure optimum performance of the disc brakes.

6. If the brake disc thickness variation measurement exceeds the specification, the disc requires refinishing or replacement.

© Copyright Chevrolet. All rights reserved

Brake Disc Surface and Wear Inspection

Warning: Refer to Brake Dust Warning in the Preface section.

1. If the inboard friction surface of the brake disc is not accessible, reposition and support the calliper with the brake pads. Refer to Front Disc Brake Pads Replacement and/or Rear Disc Brake Pads Replacement .
2. Clean the friction surfaces of the brake disc with methylated spirit, or an equivalent approved brake cleaner.
3. Inspect the friction surfaces of the brake disc for the following Braking Surface Conditions:
   - Heavy rust and/or pitting

     Light surface rust can be removed with an abrasive disc. Heavy surface rust and/or pitting must be removed by refinishing the disc.
   - Cracks and/or heat spots
   - Excessive blueing discolouration
4. If the friction surfaces of the brake disc exhibit one or more of the Braking Surface Conditions, the disc requires refinishing or replacement.

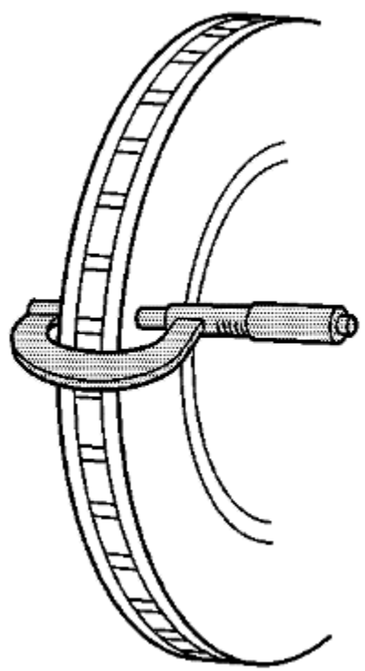

5. Using a micrometer calibrated in thousandths-of-a-millimeter, or ten-thousandths-of-an-inch, measure and record the scoring depth of any grooves present on the disc friction surfaces.
6. Compare the groove scoring depth recorded to the following specification:

   Specification
   Brake disc maximum allowable scoring: 1.50 mm (0.059 in)

7. If the brake disc scoring depth exceeds the specification, or if an excessive amount of scoring is present, the disc requires refinishing or replacement.

&#169© Copyright Chevrolet. All rights reserved

Brake Disc Assembled Lateral Runout Measurement

Special Tools

- *CH-41013* Disc Resurfacing Kit
- *CH-42450-A* Wheel Hub Resurfacing Kit
- *CH-45101* Hub and Wheel Runout Gauge
- *CH-45101-100* Conical Brake Disc Washers

For equivalent regional tools, refer to Special Tools .

Warning: Refer to Brake Dust Warning in the Preface section.

Note:

- Brake disc assembled lateral runout (LRO) exceeding the maximum allowable specification can cause thickness variation to develop in the brake disc over time, usually between 4,800-11,300 km (3,000-7,000 mi).
- Brake disc thickness variation MUST be checked BEFORE checking for assembled lateral runout (LRO). Thickness variation exceeding the maximum acceptable level can cause brake pulsation. Refer to Brake Disc Thickness Variation Measurement .

1. Matchmark the position of the brake disc to the wheel studs if this has not been done already.

   Note: Whenever the brake disc has been separated from the hub/axle flange, any rust or contaminants should be cleaned from the hub/axle flange and the brake disc mating surfaces. Failure to do this may result in excessive assembled lateral runout (LRO) of the brake disc, which could lead to brake pulsation.

2. Inspect the mating surface of the hub/axle flange and the brake disc to ensure that there are no foreign particles, corrosion, rust, or debris remaining. If the wheel hub/axle flange and/or if the brake disc mating surfaces exhibit these conditions, perform the following steps:
   2.1. Remove the brake disc from the vehicle. Refer to Front Brake Disc Replacement and/or Rear Brake Disc Replacement .
   2.2. Using the *CH-42450-A* wheel hub resurfacing kit, thoroughly clean any rust or corrosion from the mating surface of the hub/axle flange.
   2.3. Using the *CH-41013* disc resurfacing kit, thoroughly clean any rust or corrosion from the mating surface of the brake disc.
   2.4. Clean the friction surfaces of the brake disc with methylated spirit, or an equivalent approved brake cleaner.
3. Install the disc to the hub/axle flange using the matchmark made prior to removal.

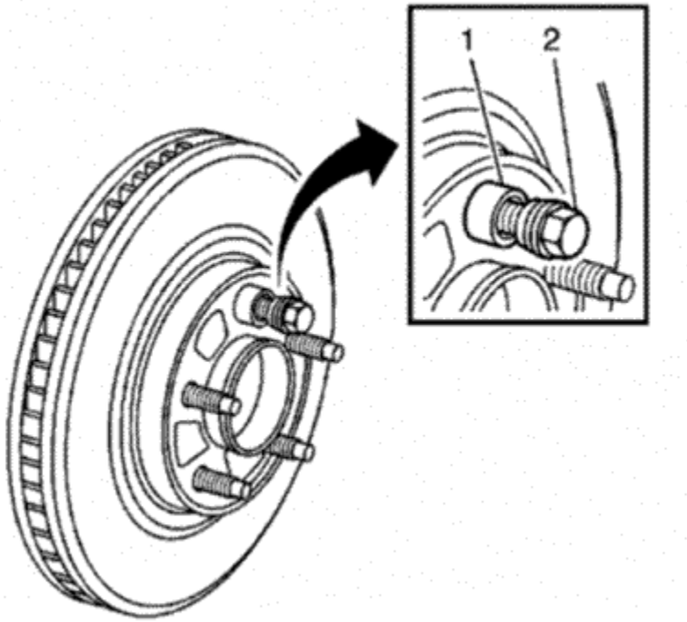

4. Hold the disc firmly in place against the hub/axle flange and install one of th *CH-45101-100* conical brake disc washers (1), and one lug nut (2) onto the upper-most wheel stud.
5. Continue to hold the disc secure and tighten the wheel nut firmly by hand.

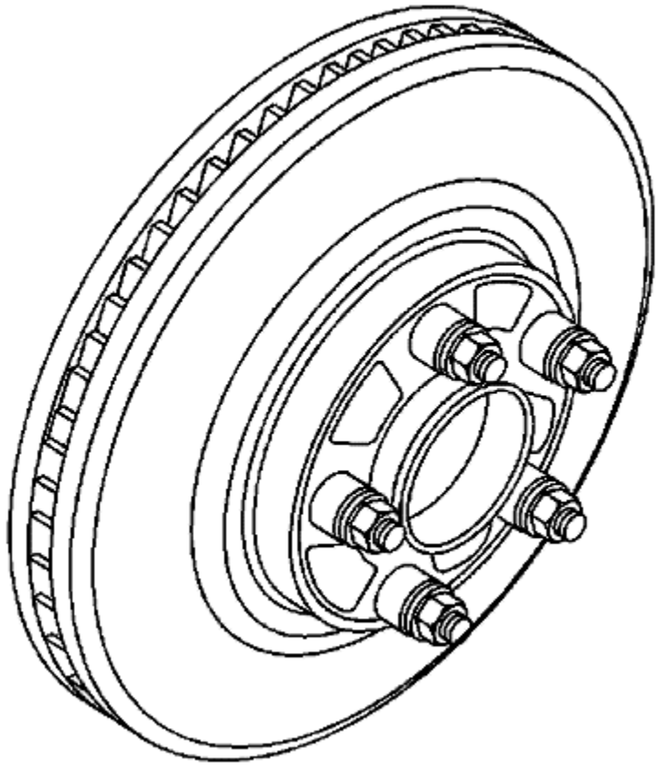

6. Install the remaining *CH-45101-100* conical brake disc washers and lug nuts onto the wheel studs and tighten the nuts firmly by hand in a star-pattern.
7. Tighten the lug nuts in a star-pattern to specification. Refer to Tyre and Wheel Removal and Installation .
8. If the brake disc has been REFINISHED or REPLACED with a new disc, proceed to step 14.
9. If the brake disc meets the following criteria, proceed to step 10.
   - The disc is within specifications and is being REUSED.
   - The disc has NOT been refinished.
   - The disc does NOT exhibit thickness variation exceeding the maximum allowable level.

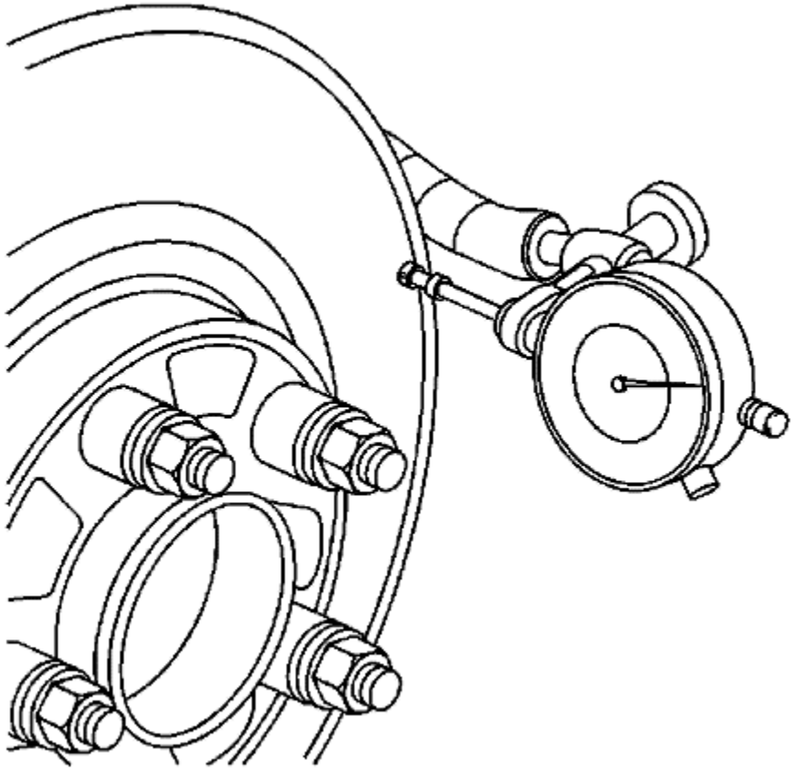

10. Mount a dial indicator, *CH-45101* hub and wheel runout gauge, or equivalent, to the steering knuckle and position the indicator button so it contacts the brake disc friction surface at a 90 degree angle, approximately 13 mm (0.5 in) from the outer edge of the disc.
11. Measure and record the assembled LRO of the brake disc.
    11.1. Rotate the disc until the lowest reading is displayed on the indicator dial, then set the dial to zero.
    11.2. Rotate the disc until the highest reading is displayed on the dial.
    11.3. Mark the location of the high spot relative to the nearest wheel stud, or studs.
    11.4. Measure and record the amount of LRO.
12. Compare the brake disc assembled LRO to the following specification:

    Specification

    - Front brake disc maximum allowable assembled lateral runout: 0.05 mm (0.002 in)
    - Rear brake disc maximum allowable assembled lateral runout: 0.05 mm (0.002 in)
13. If the brake disc assembled LRO is within specifications, proceed to step 18.

    If the brake disc assembled LRO exceeds the specification, refinish the disc to ensure true parallelism. Refer to Brake Disc Refinishing . After refinishing the disc, proceed to step 14.

14. Mount a dial indicator, *CH-45101* hub and wheel runout gauge, or equivalent, to the steering knuckle and position the indicator button so it contacts the brake disc friction surface at a 90 degree angle, approximately 13 mm (0.5 in) from the outer edge of the disc.
15. Measure and record the assembled LRO of the brake disc.
    15.1. Rotate the disc until the lowest reading is displayed on the indicator dial, then set the dial to zero.
    15.2. Rotate the disc until the highest reading is displayed on the dial.
    15.3. Mark the location of the high spot relative to the nearest wheel stud, or studs.
    15.4. Measure and record the amount of LRO.
16. Compare the brake disc assembled LRO to the following specification:

    Specification

    - Front brake disc maximum allowable assembled lateral runout: 0.05 mm (0.002 in)
    - Rear brake disc maximum allowable assembled lateral runout: 0.05 mm (0.002 in)
17. If the brake disc assembled LRO measurement exceeds the specification, bring the LRO to within specifications. Refer to Brake Disc Assembled Lateral Runout Correction .
18. If the brake disc assembled LRO measurement is within specification, install the brake calliper and depress the brake pedal several times to secure the disc in place before removing the *CH-45101-100* conical brake disc washers and the lug nuts.

&#169© Copyright Chevrolet. All rights reserved

Brake Pad Inspection

Warning: Refer to Brake Dust Warning in the Preface section.

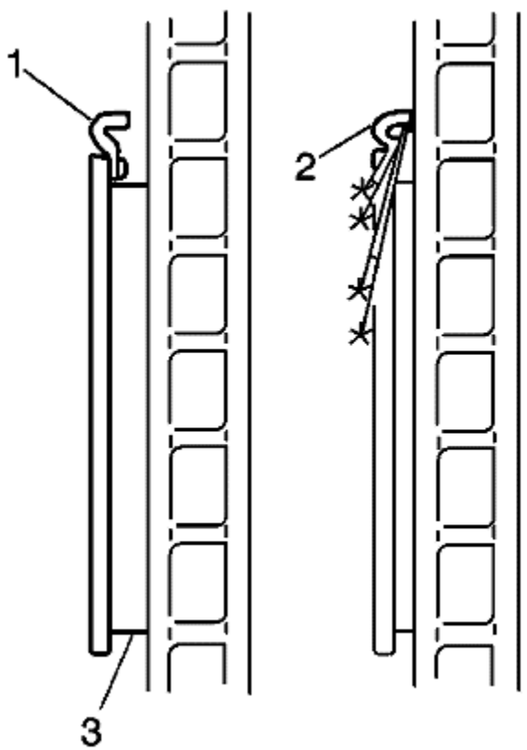

1. Inspect the disc brake pads at regular intervals, or whenever the tyre and wheel assemblies are removed from the vehicle.
2. If replacement is necessary, always replace disc brake pads in axle sets.
3. Inspect both edges of the disc brake pad friction surfaces (3). The highest rate of wear normally occurs at the trailing edge of the disc brake pads.
4. Inspect the thickness of the disc brake pads (3) in order to ensure that they have not worn prematurely. The disc brake pad wear should be approximately even per axle set.

5. Both front and rear disc brake pads have integral, audible wear sensors (1). When the disc brake pad wear reaches the minimum allowable thickness, the wear sensor contacts the disc brake disc (2). The wear indicator will then produce an audible, high-pitched warning noise during wheel rotation.
6. Replace the disc brake pads when the friction surface (3) is worn to within 0.76 mm (0.030 in) of the mounting plates.
7. Remove the brake callipers and inspect the friction surfaces of the inner and outer disc brake pads to ensure that they are level. Place the disc brake pad friction surfaces together and measure the gap between the surfaces. If more than 0.13 mm (0.005 in) gap exists midway between the length of the disc brake pads, replace the disc brake pads.
8. Verify that any disc brake pad shims that may be required are in place and not damaged or excessively corroded. Replace any missing or damaged shims in order to preserve proper disc brake performance.
9. Replace the disc brake pads if any have separated from the mounting plates.
10. Inspect the disc brake pads friction surfaces for cracks, fractures, or damage which may cause noise or otherwise impair disc brake performance.

© Copyright Chevrolet. All rights reserved

Brake Calliper Inspection

Warning: Refer to Brake Dust Warning in the Preface section.

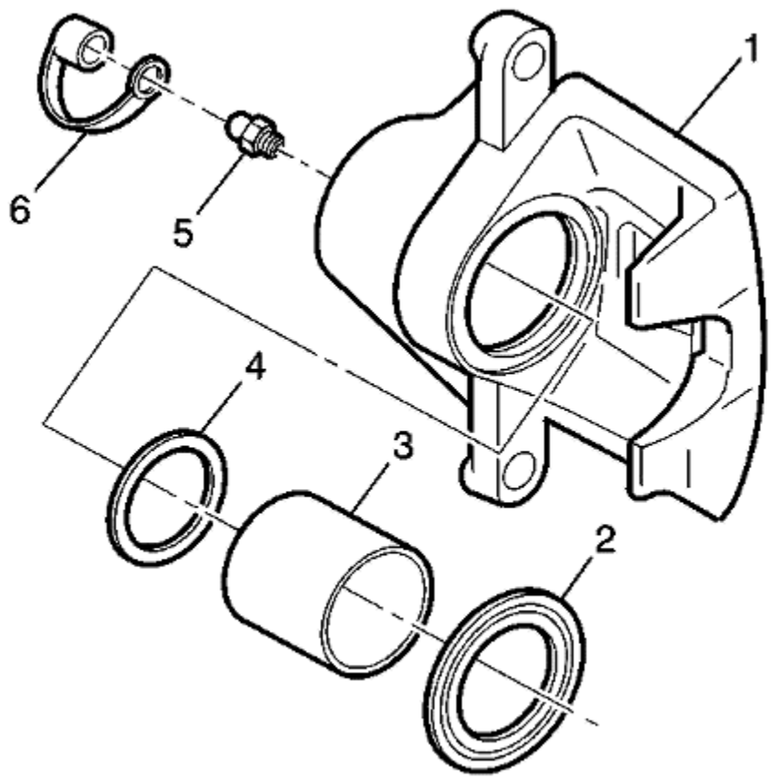

1. Inspect the brake calliper housing (1) for cracks, excess wear, and/or damage. If any of these conditions are present, the brake calliper requires replacement.
2. Inspect the calliper piston dust boot seal (2) for cracks, tears, cuts, deterioration and/or improper seating in the calliper body. If any of these conditions are present, the brake calliper requires overhaul or replacement.
3. Inspect for brake fluid leakage around the calliper piston dust boot seal (2) and on the disc brake pads. If there is any evidence of brake fluid leakage, the brake calliper requires overhaul or replacement.

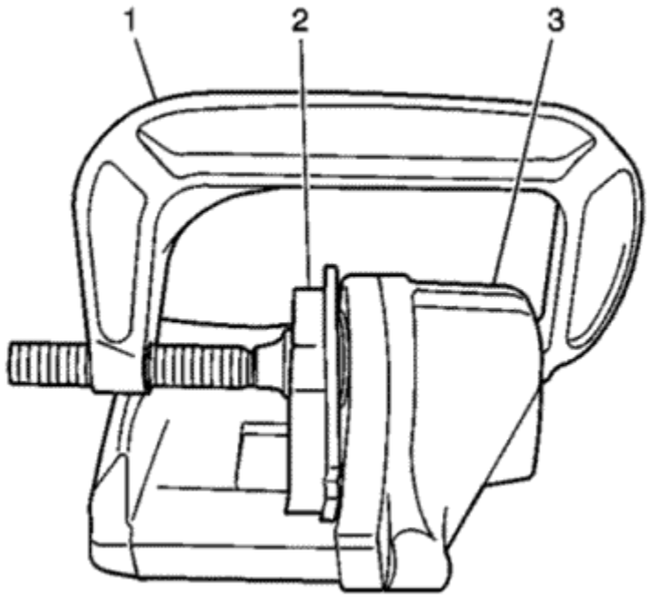

4. Inspect for smooth and complete travel of the calliper pistons into the calliper bores:

   The movement of the calliper pistons into the calliper bores should be smooth and even. If the calliper piston is seized or difficult to bottom, the calliper requires overhaul or replacement.

   - For single piston calliper applications, insert a discarded inner brake pad (2) or block of wood in front of the piston. Using a large C-clamp (1) installed over the body of the calliper (3) and against the brake pad or block of wood, slowly bottom the piston in the bore.
   - For dual piston calliper applications, insert a discarded inner brake pad (2) or block of wood in front of the pistons. Using 2 large C-clamps (1) installed over the body of the calliper (3) and against the brake pad or block of wood, slowly bottom the pistons evenly into the bores.

&#169© Copyright Chevrolet. All rights reserved

Front Disc Brake Mounting and Hardware Inspection

Warning: Refer to Brake Dust Warning in the Preface section.

1. Inspect the fluid level in the brake master cylinder reservoir.
2. If the brake fluid level is midway between the maximum-full point and the minimum allowable level then no brake fluid needs to be removed from the reservoir before proceeding.
3. If the brake fluid level is higher than midway between the maximum-full point and the minimum allowable level then remove brake fluid to the midway point before proceeding.

   Danger: Do not use a service jack in locations other than those specified to lift this vehicle. Lifting the vehicle with a jack in those other locations could cause the vehicle to slip off the jack and roll; this could cause injury or death.

4. Raise and support the vehicle. Refer Lifting and Jacking the Vehicle .
5. Remove the tyre and wheel assembly. Refer to Tyre and Wheel Removal and Installation .

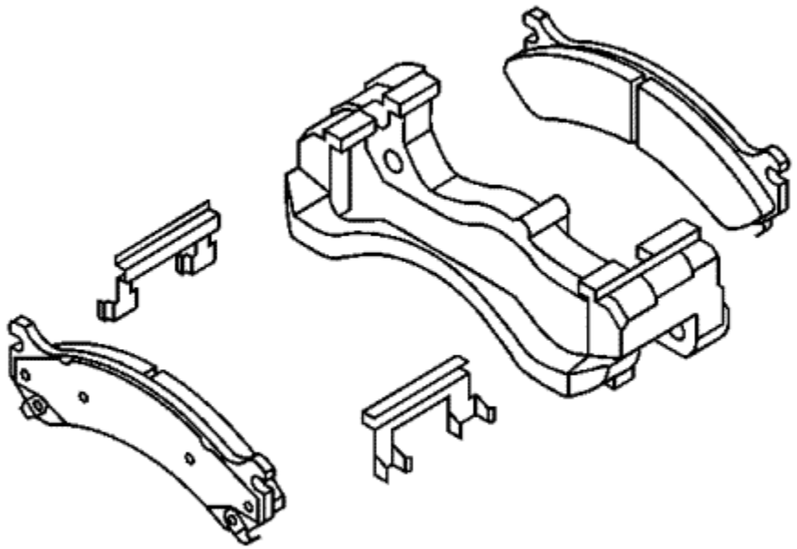

6. Grasp the brake calliper housing and try to move the brake calliper housing up/down and forward/reverse in relation to the brake calliper mounting bracket. If excessive looseness is observed the brake calliper bracket bushes and/or the brake calliper mounting bolts may need to be replaced.
7. Compress the front calliper pistons.
   - Install a large C-clamp over the top of the calliper housing and against the back of the outboard pad.
   - Slowly tighten the C-clamp until the pistons are pushed completely into the calliper bores.
   - Remove the C-clamp from the calliper.
8. With the pistons compressed into the calliper bores, grasp the brake calliper housing and slide it back and forth on the brake calliper mounting bolts. Check for smooth operation. If the brake calliper housing slide force is high or the brake calliper housing does not slide smoothly, inspect the brake calliper mounting bolts and/or the brake calliper mounting bracket bushes for wear or damage. If wear or damage conditions are found, replacement of the brake calliper mounting bolts and/or the brake calliper mounting bracket bushes is necessary.
9. Remove the brake calliper mounting bolts from the brake calliper mounting bracket and support the brake calliper using heavy mechanics wire. Do Not remove the hydraulic brake hose from the calliper. Refer to Front Brake Calliper Replacement .
10. Remove the disc brake pads from the brake calliper mounting bracket.
11. Inspect the disc brake pad mounting hardware for the following:
    - Missing mounting hardware

- Excessive corrosion
- Bent mounting tabs
- Looseness at the brake calliper mounting bracket
- Looseness at the disc brake pads
- Excessive contaminants in the brake calliper mounting bracket surface and threads.

12. If any of the conditions listed are found, the disc brake pad mounting hardware requires replacement.
13. Ensure the disc brake pads are held firmly in place on the brake calliper mounting bracket, yet slide easily on the mounting hardware without binding.

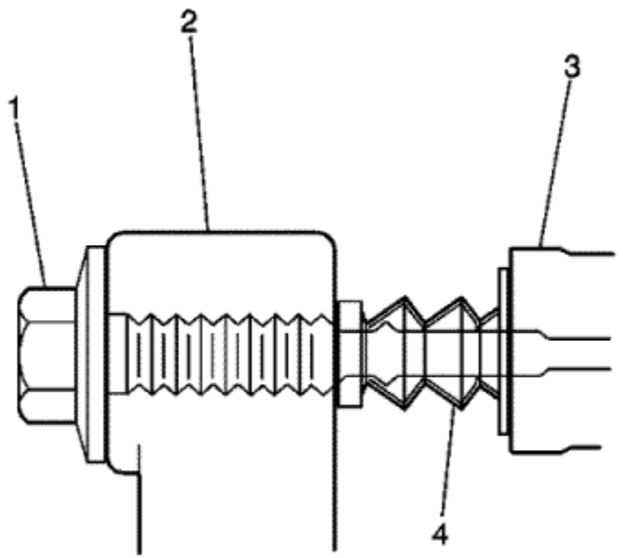

14. Inspect the calliper bolts (1) for the following:
    - Binding
    - Seizing
    - Looseness in the brake calliper mounting bracket (3)
    - Bent or damaged brake calliper mounting bolts
    - Cracked or torn boots (4)
    - Missing boots
    - Bent or damaged brake calliper mounting bracket (3)
15. If any of the conditions listed are found then the brake calliper mounting hardware requires replacement.

16. Install the disc brake pads to the brake calliper mounting bracket.
17. Install the disc brake calliper to the brake calliper mounting bracket. Refer to Front Brake Calliper Replacement .

&#169© Copyright Chevrolet. All rights reserved

Rear Disc Brake Mounting and Hardware Inspection

Warning: Refer to Brake Dust Warning in the Preface section.

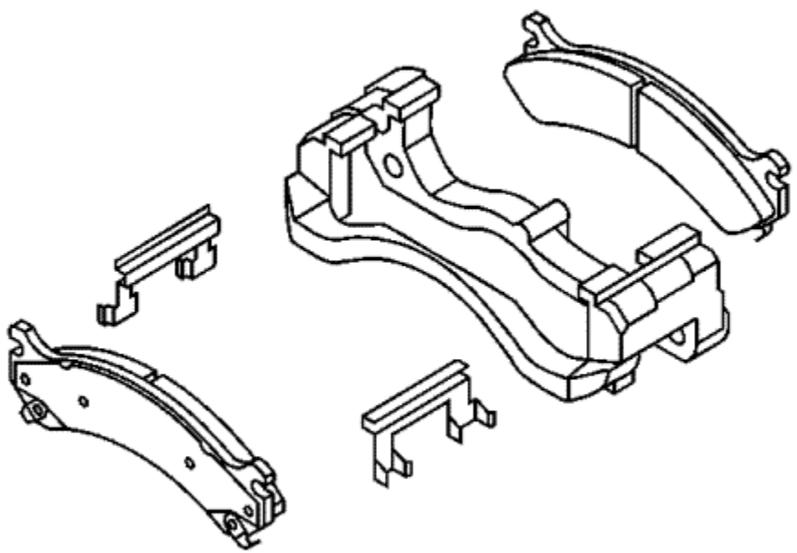

1. Remove the disc brake calliper from the calliper mounting bracket.
2. Remove the disc brake pads from the calliper mounting bracket.
3. Inspect the disc brake pad mounting hardware for the following:
   - Missing mounting hardware
   - Excessive corrosion

- Bent mounting tabs
- Looseness at the calliper mounting bracket
- Looseness at the disc brake pads

4. If any of the conditions listed are found, the disc brake pad mounting hardware requires replacement.
5. Ensure the disc brake pads are held firmly in place on the calliper mounting bracket, yet slide easily on the mounting hardware without binding.
6. Install the disc brake pads to the calliper mounting bracket.
7. Install the disc brake calliper to the mounting bracket.

&#169© Copyright Chevrolet. All rights reserved

Front Disc Brake Pads Replacement

Removal Procedure

Warning: Refer to Brake Dust Warning in the Preface section.

1. Inspect the fluid level in the brake master cylinder reservoir.
2. If the brake fluid level is midway between the maximum-full point and the minimum allowable level, no brake fluid needs to be removed before proceeding.
3. If the brake fluid level is higher than midway between the maximum-full point and the minimum allowable level, remove brake fluid to the midway point before proceeding.

   Danger: Do not use a service jack in locations other than those specified to lift this vehicle. Lifting the vehicle with a jack in those other locations could cause the vehicle to slip off the jack and roll; this could cause injury or death.

4. Raise and support the vehicle. Refer to Lifting and Jacking the Vehicle .
5. Remove the tyre and wheel assembly. Refer to Tyre and Wheel Removal and Installation .
6. Place a large C-clamp over the brake calliper body and against the outer brake pad.
7. Using the C-clamp, compress the brake calliper piston fully into the brake calliper bore.

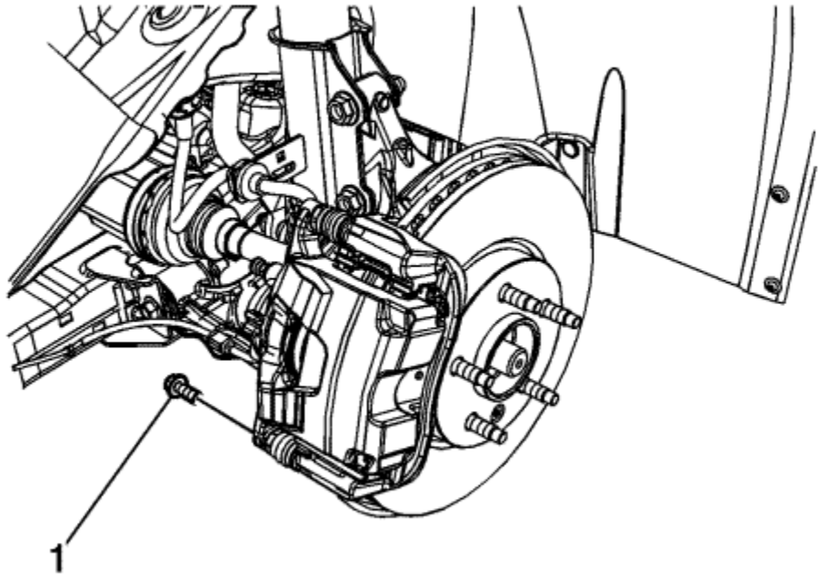

Note:

- DO NOT use any air tools to remove or install the guide pin bolts. Use hand tools ONLY.
- Install an open end wrench to hold the calliper guide pin in line with the brake calliper while removing or installing the calliper guide pin bolt. DO NOT allow the open end wrench to come in contact with the brake calliper. Allowing the open end wrench to come in contact with the brake calliper will cause a pulsation when the brakes are applied.

8. Using a backup wrench to hold the brake calliper guide pin stationary, remove the lower brake calliper guide pin bolt (1).

   Caution: Support the brake calliper with heavy mechanic wire, or equivalent, whenever it is separated from its mount and the hydraulic flexible brake hose is still connected. Failure to support the calliper in this manner will cause the flexible brake hose to bear the weight of the calliper, which may cause damage to the brake hose and in turn may cause a brake fluid leak.

9. Rotate the brake calliper upward and support with heavy mechanics wire or equivalent.

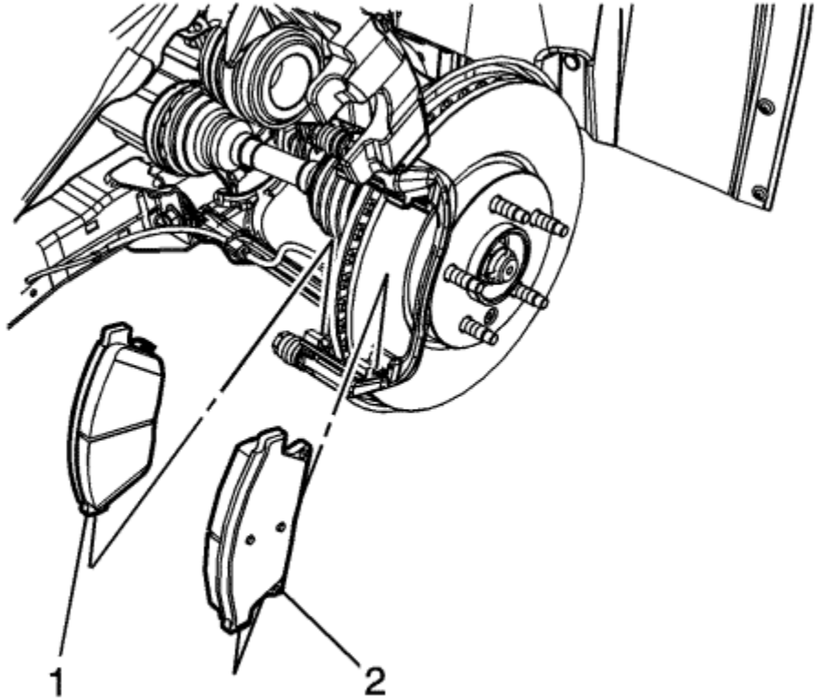

Note: Note the location of the brake pad wear sensor for correct installation.

10. Remove the inner brake pad (1).
11. Remove the outer brake pad (2).

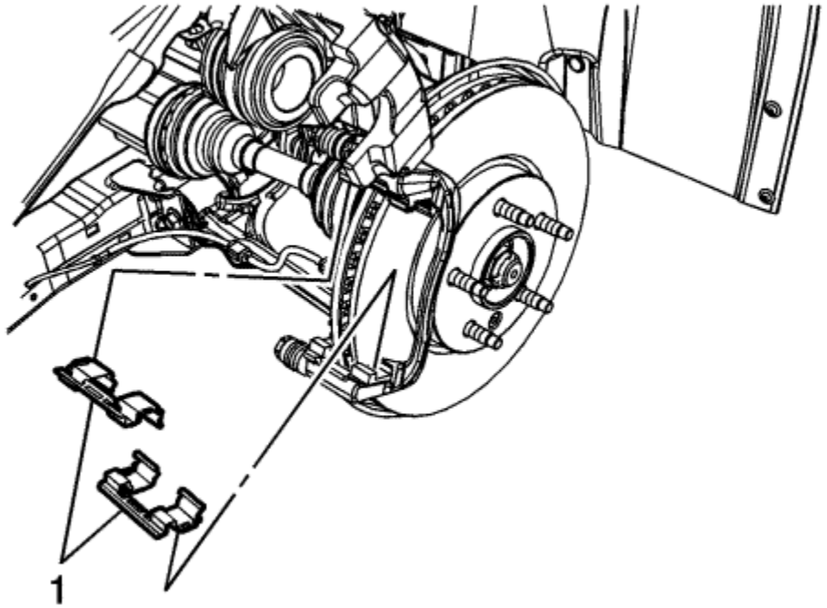

12. Remove the upper and lower brake pad springs (1).
13. If installing new brake pads, discard the brake pad springs.

Installation Procedure

1. Thoroughly clean the contact surfaces of the brake calliper bracket of any corrosion or debris.

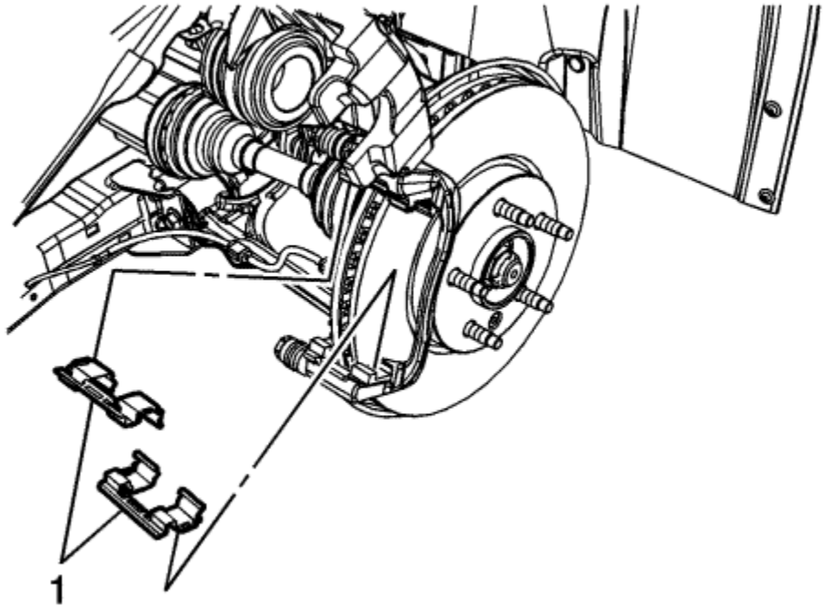

Note: If installing new brake pads, install new brake pad springs.

2. Install the upper and lower brake pad springs (1).

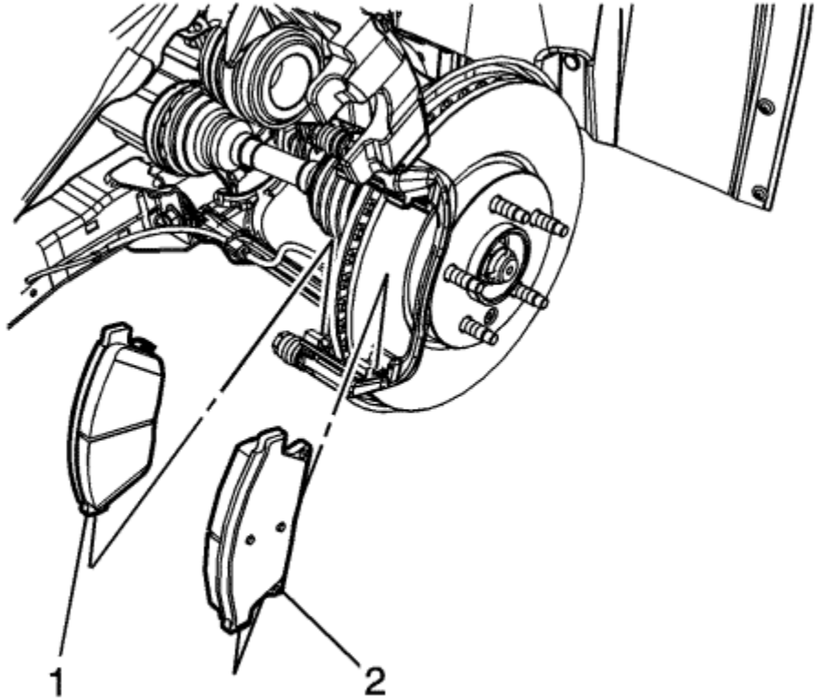

Note: Note the location of the brake pad wear sensor for correct installation.

3. Install the inner brake pad (1).
4. Install the outer brake pad (2).
5. Position the brake calliper over the brake pads and to the calliper bracket.

Caution: Refer to Fastener Caution in the Preface section.

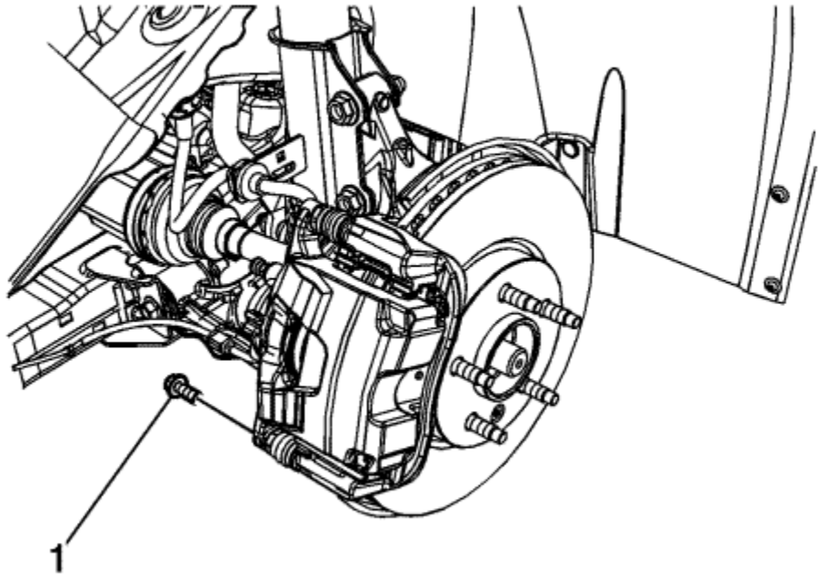

6. Using a backup wrench to hold the brake calliper guide pin stationary, install the lower brake calliper guide pin bolt (1) and tighten to **28 N·m (21 lb ft)**.
7. Install the tyre and wheel assembly. Refer to Tyre and Wheel Removal and Installation .
8. With the engine OFF, gradually apply the brake pedal to approximately 2/3 of its travel distance.
9. Slowly release the brake pedal.
10. Wait 15 seconds, then repeat steps 8-9 until a firm brake pedal is obtained. This will properly seat the brake calliper piston and brake pads.
11. Fill the master cylinder reservoir. Refer to Master Cylinder Reservoir Filling .

&#169© Copyright Chevrolet. All rights reserved

Rear Disc Brake Pads Replacement

Removal Procedure

Warning: Refer to Brake Dust Warning in the Preface section.

1. Inspect the fluid level in the brake master cylinder reservoir.
2. If the brake fluid level is midway between the maximum-full point and the minimum allowable level, no brake fluid needs to be removed before proceeding.
3. If the brake fluid level is higher than midway between the maximum-full point and the minimum allowable level, remove brake fluid to the midway point before proceeding.

   Danger: Do not use a service jack in locations other than those specified to lift this vehicle. Lifting the vehicle with a jack in those other locations could cause the vehicle to slip off the jack and roll; this could cause injury or death.

4. Raise and support the vehicle. Refer to Lifting and Jacking the Vehicle .
5. Remove the tyre and wheel assembly. Refer to Tyre and Wheel Removal and Installation .

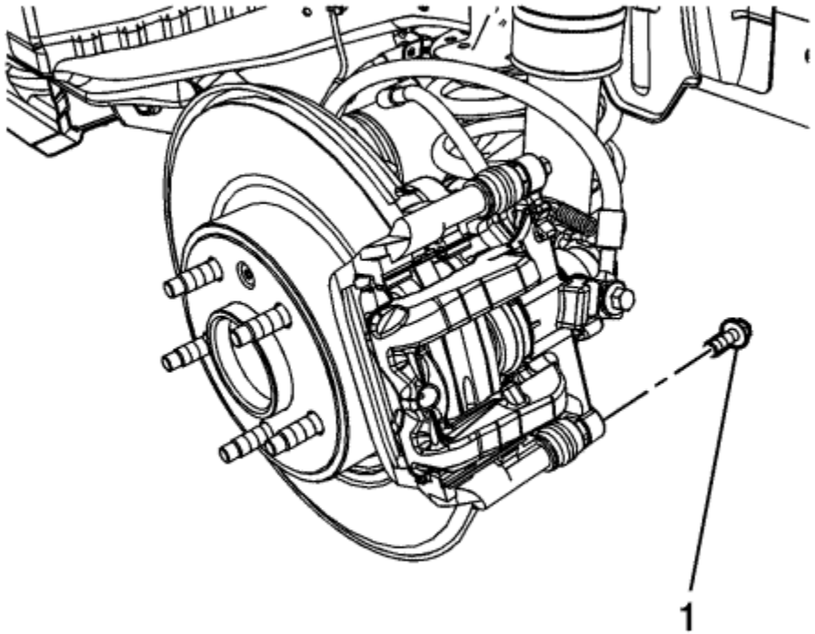

Note:

- DO NOT use any air tools to remove or install the guide pin bolts. Use hand tools ONLY.
- Install an open end wrench to hold the calliper guide pin in line with the brake calliper while removing or installing the calliper guide pin bolt. DO NOT allow the open end wrench to come in contact with the brake calliper. Allowing the open end wrench to come in contact with the brake calliper will cause a pulsation when the brakes are applied.

6. Using a backup wrench to hold the brake calliper guide pin stationary, remove the lower brake calliper guide pin bolt (1).

   Caution: Support the brake calliper with heavy mechanic wire, or equivalent, whenever it is separated from its mount and the hydraulic flexible brake hose is still connected. Failure to support the calliper in this manner will cause the flexible brake hose to bear the weight of the calliper, which may cause damage to the brake hose and in turn may cause a brake fluid leak.

7. Rotate the brake calliper upward and support with heavy mechanics wire or equivalent.

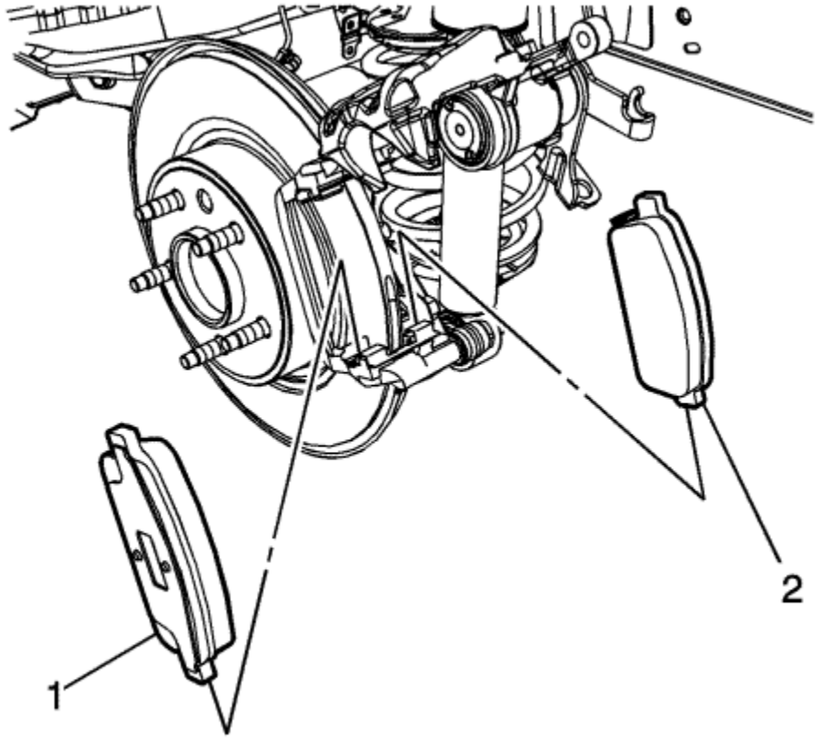

Note: Note the location of the brake pad wear sensor for correct installation.

8. Remove the outer brake pad (1).
9. Remove the inner brake pad (2).

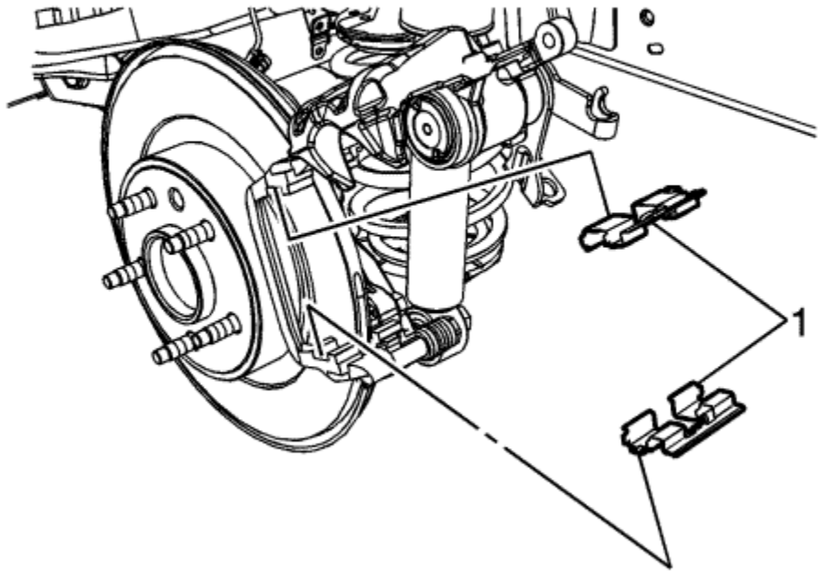

10. Remove the upper and lower brake pad springs (1).
11. If installing new brake pads, discard the brake pad springs.

Installation Procedure

1. Using a brake calliper piston spanner tool, rotate the brake calliper piston clockwise while applying pressure to the face of the calliper piston to compress the piston into the calliper bore.
2. Thoroughly clean the contact surfaces of the brake calliper bracket of any corrosion or debris.

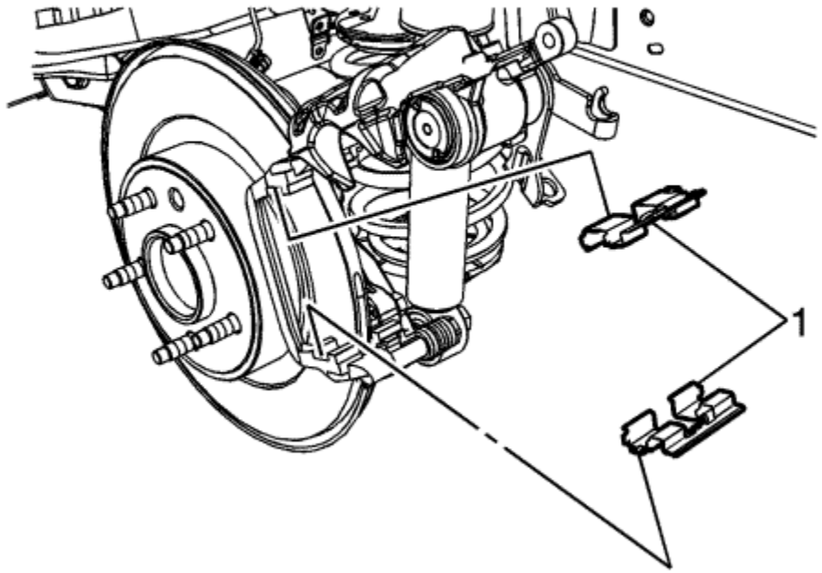

Note: If installing new brake pads, install new brake pad springs.

3. Install the upper and lower brake pad springs (1).

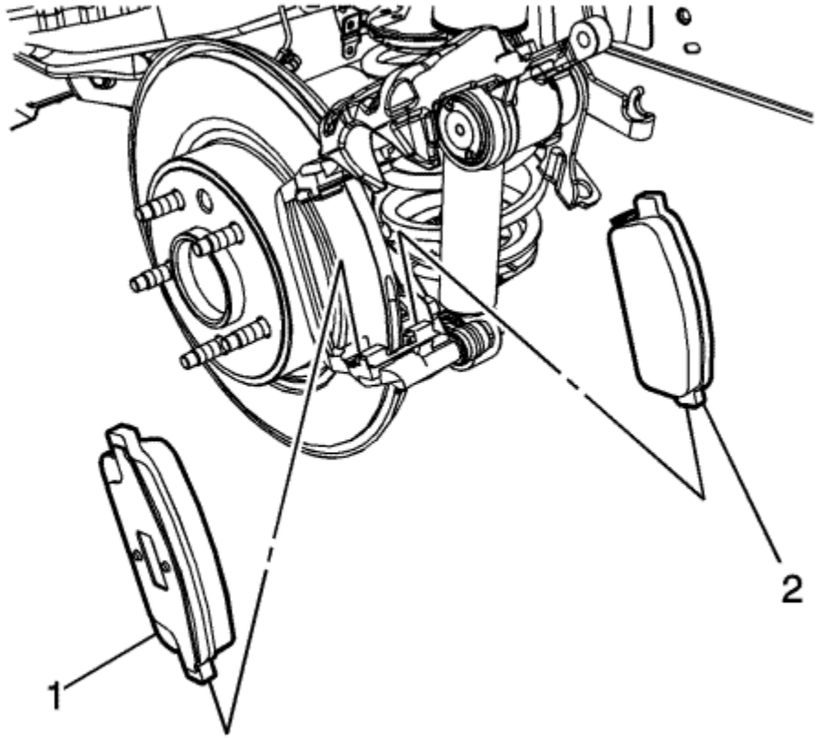

Note: Note the location of the brake pad wear sensor for correct installation.

4. Install the outer brake pad (1).
5. Install the inner brake pad (2).
6. Position the brake calliper over the brake pads and to the calliper bracket.

Caution: Refer to Fastener Caution in the Preface section.

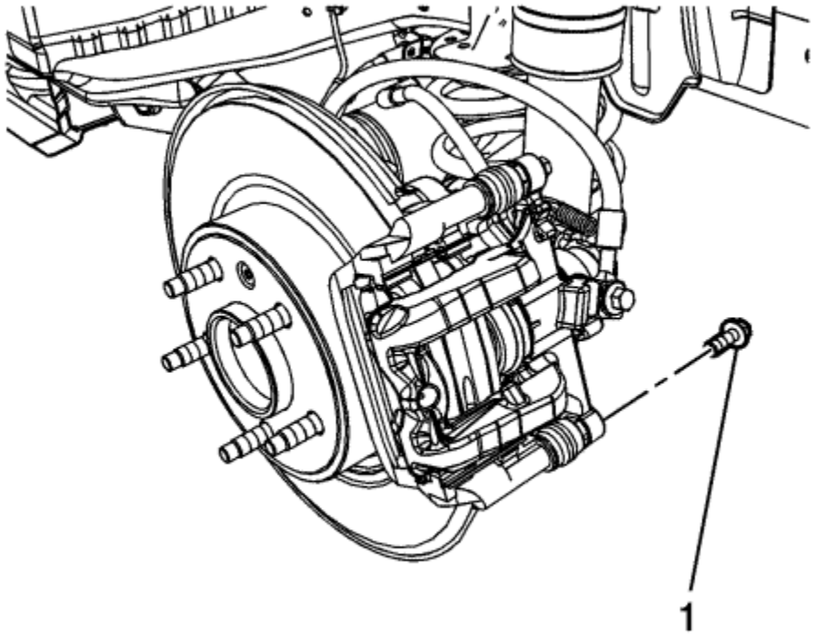

7. Using a backup wrench to hold the brake calliper guide pin stationary, Install the lower brake calliper guide pin bolt (1) and tighten to **28 N·m (21 lb ft)**.
8. Install the tyre and wheel assembly. Refer to Tyre and Wheel Removal and Installation .
9. With the engine OFF, gradually apply the brake pedal to approximately 2/3 of its travel distance.
10. Slowly release the brake pedal.
11. Wait 15 seconds, then repeat steps 9-10 until a firm brake pedal is obtained. This will properly seat the brake calliper piston and brake pads.
12. Fill the master cylinder reservoir. Refer to Master Cylinder Reservoir Filling .

&#169© Copyright Chevrolet. All rights reserved

Front Brake Calliper Replacement

Removal Procedure

Warning: Refer to Brake Dust Warning in the Preface section.

Warning: Refer to Brake Fluid Irritant Warning in the Preface section.

Danger: Do not use a service jack in locations other than those specified to lift this vehicle. Lifting the vehicle with a jack in those other locations could cause the vehicle to slip off the jack and roll; this could cause injury or death.

1. Raise and support the vehicle. Refer to Lifting and Jacking the Vehicle .
2. Remove the tyre and wheel assembly. Refer to Tyre and Wheel Removal and Installation .

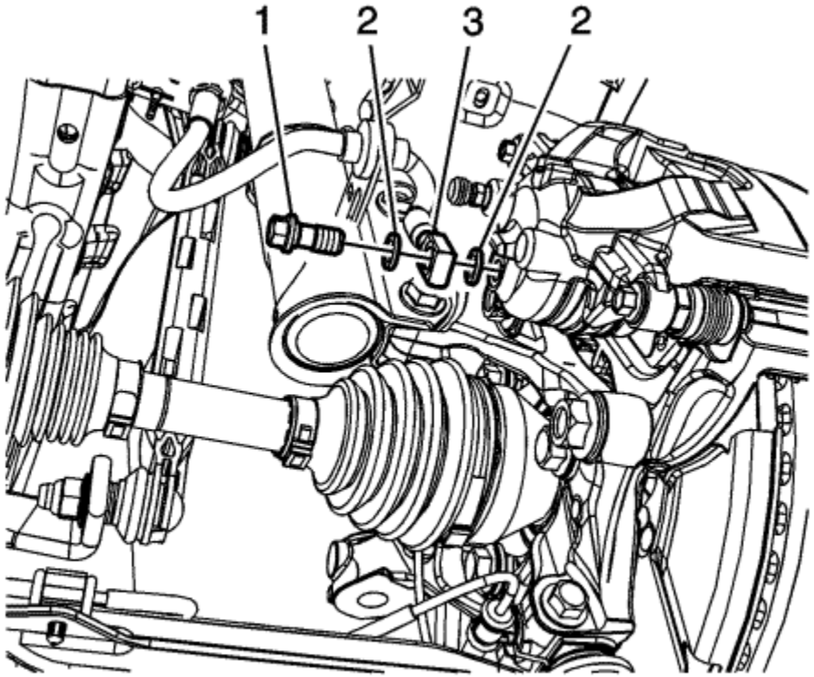

3. Remove the brake hose fitting bolt (1).

   Note: Do not reuse the brake hose fitting gaskets.

4. Remove and discard the brake hose fitting gaskets (2) from the brake hose fitting (3).
5. Cap the brake hose fitting to prevent brake fluid loss and contamination.

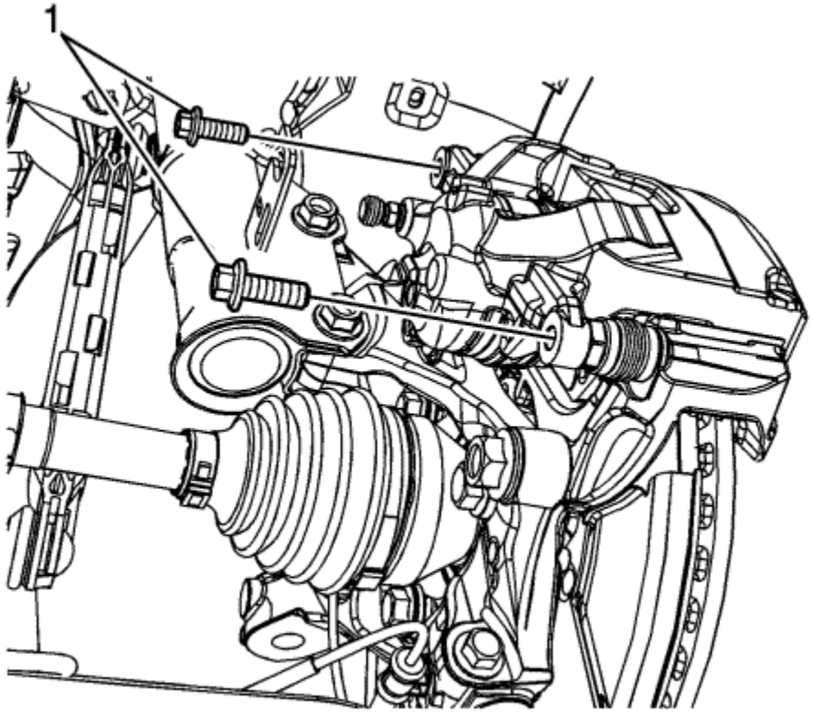

Note:

- DO NOT use any air tools to remove or install the guide pin bolts. Use hand tools ONLY.
- Install an open end wrench to hold the calliper guide pin in line with the brake calliper while removing or installing the calliper guide pin bolt. DO NOT allow the open end wrench to come in contact with the brake calliper. Allowing the open end wrench to come in contact with the brake calliper will cause a pulsation when the brakes are applied.

6. Using a backup wrench to hold the brake calliper guide pin stationary, remove the brake calliper guide pin bolts (1).
7. Remove the brake calliper.

Installation Procedure

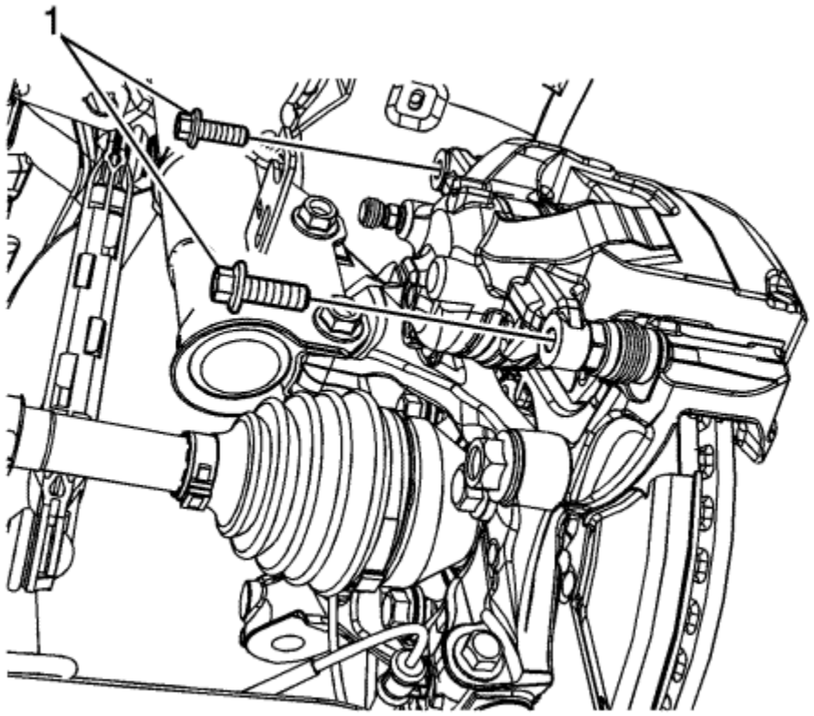

1. Position the brake calliper over the brake pads and to the calliper bracket.

   Caution: Refer to Fastener Caution in the Preface section.

2. Using a backup wrench to hold the brake calliper guide pin stationary, install the brake calliper guide pin bolts (1) and tighten to **28 N·m (21 lb ft)**.

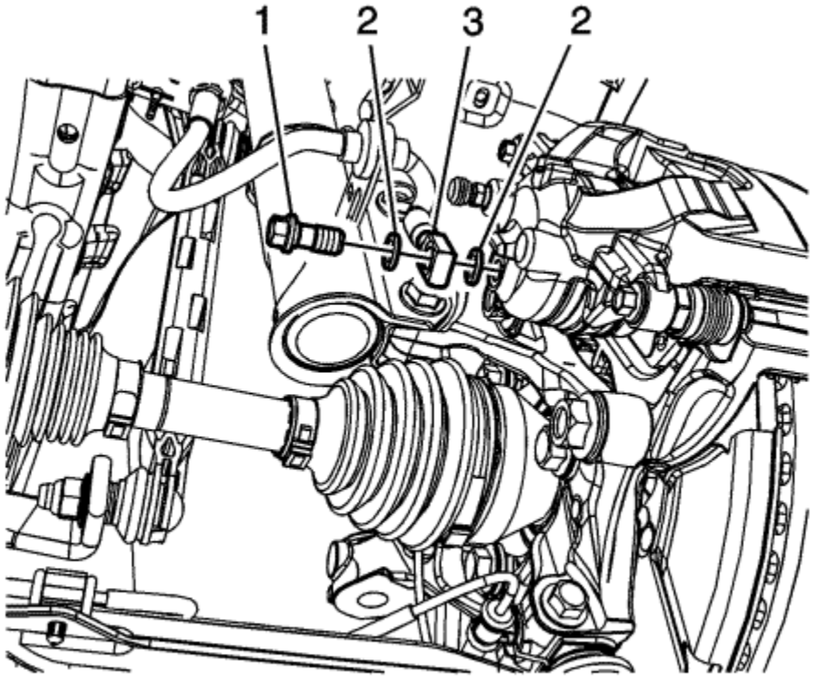

Note: Install new brake hose fitting gaskets.

3. Assemble the brake hose fitting bolt (1) and the 2 new brake hose fitting gaskets (2) to the brake hose fitting (3).
4. Install the brake hose assembly and tighten the brake hose fitting bolt to **40 N·m (30 lb ft)**.
5. Bleed the hydraulic brake system. Refer to Hydraulic Brake System Bleeding : Pressure .
6. Install the tyre and wheel assembly. Refer to Tyre and Wheel Removal and Installation .

&#169© Copyright Chevrolet. All rights reserved

Rear Brake Calliper Replacement

Removal Procedure

Warning: Refer to Brake Dust Warning in the Preface section.

Warning: Refer to Brake Fluid Irritant Warning in the Preface section.

Danger: Do not use a service jack in locations other than those specified to lift this vehicle. Lifting the vehicle with a jack in those other locations could cause the vehicle to slip off the jack and roll; this could cause injury or death.

1. Raise and support the vehicle. Refer to Lifting and Jacking the Vehicle .
2. Remove the tyre and wheel assembly. Refer to Tyre and Wheel Removal and Installation .
3. Disable the hand brake cable adjuster. Refer to Hand brake Cable Adjuster Disabling .

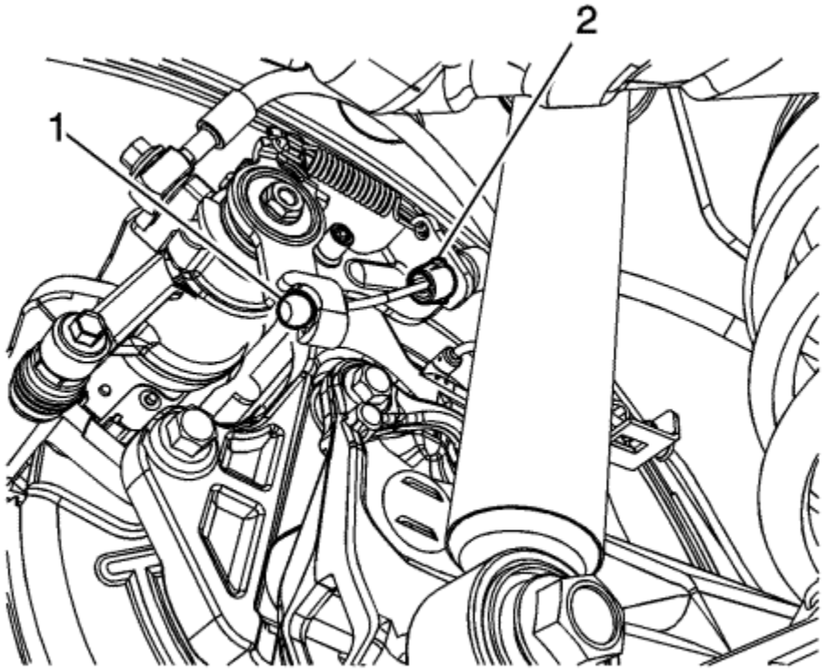

4. Disconnect the hand brake cable (1) from the actuator lever.
5. Compress the hand brake cable conduit retainers (2).
6. Remove the hand brake cable from the cable bracket and position the hand brake cable aside.

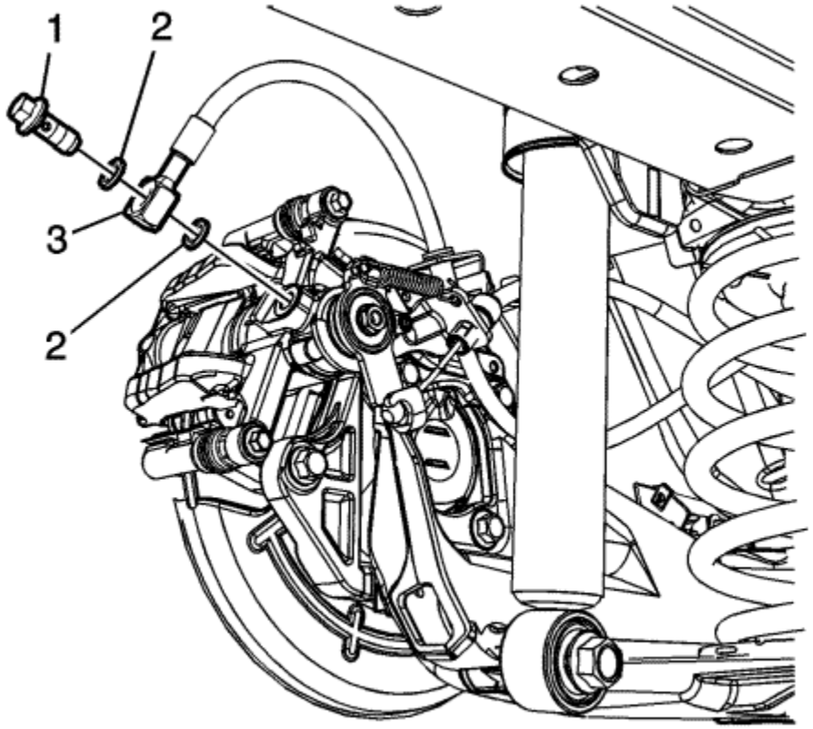

7. Remove the brake hose fitting bolt (1).

   Note: Do not reuse the brake hose fitting gaskets.

8. Remove and discard the brake hose fitting gaskets (2) from the brake hose (3).
9. Plug the brake hose fitting to prevent brake fluid loss and contamination.

   Note:
   - DO NOT use any air tools to remove or install the guide pin bolts. Use hand tools ONLY
   - Install an open end wrench to hold the calliper guide pin in line with the brake calliper while removing or installing the calliper guide pin bolt. DO NOT allow the open end wrench to come in contact with the brake calliper. Allowing the open end wrench to come in contact with the brake calliper will cause a pulsation when the brakes are applied.

10. Using a backup wrench to hold the brake calliper guide pin (1) stationary, remove the brake calliper guide pin bolts (2).
11. Remove the brake calliper.

Installation Procedure

1. Position the brake calliper over the brake pads and to the calliper bracket.

   Caution: Refer to Fastener Caution in the Preface section.

2. Using a backup wrench to hold the brake calliper guide pin (1) stationary, install the brake calliper guide pin bolts (2) and tighten to **28 N·m (21 lb ft)**.

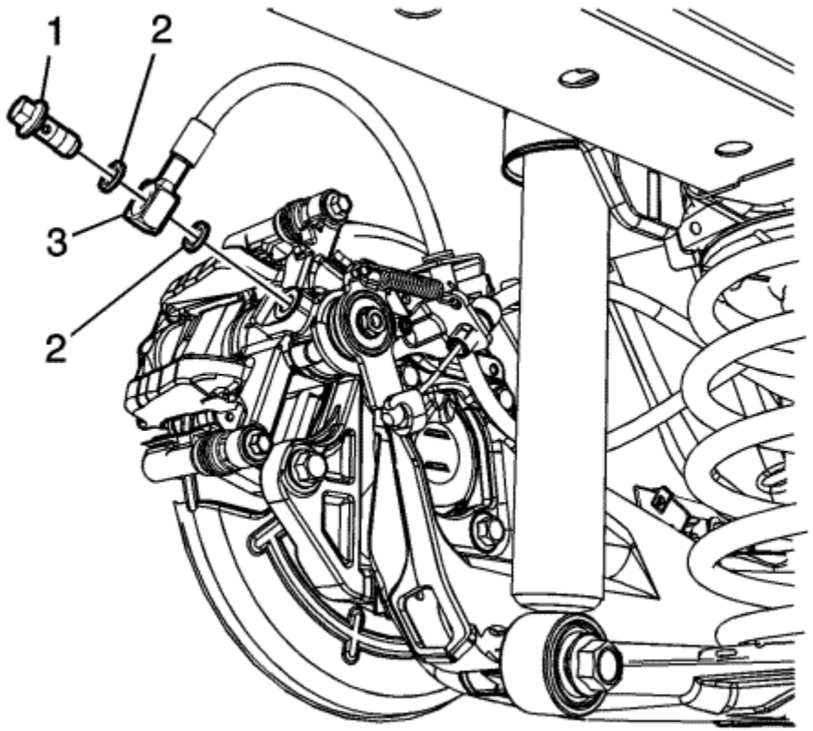

3. Assemble the brake hose fitting bolt (1) and the 2 new brake hose fitting gaskets (2) to the brake hose (3).
4. Install the brake hose assembly to the brake calliper and tighten the fitting bolt to **40 N·m (30 lb ft)**.

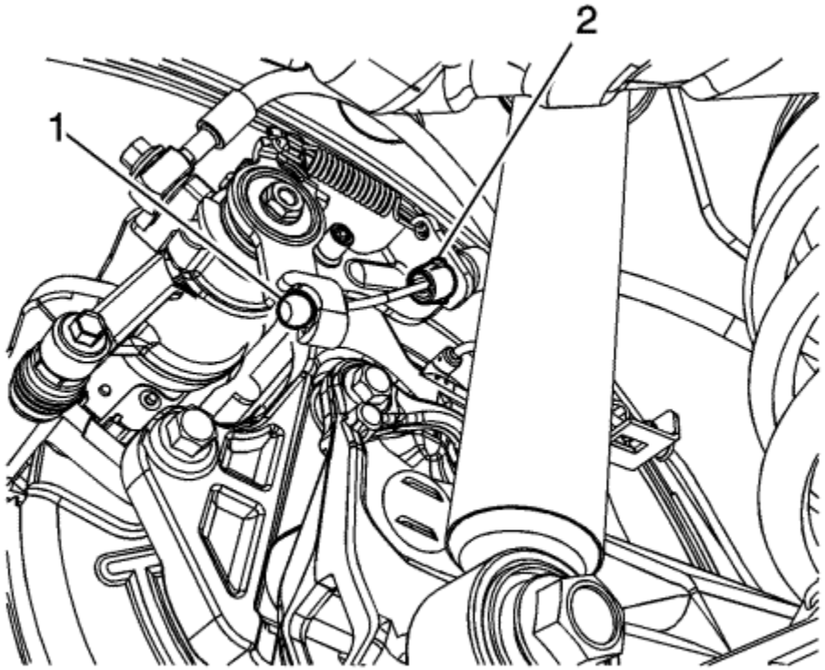

5. Insert the hand brake cable through the hand brake cable bracket on the brake calliper.
6. Connect the hand brake cable (1) to the actuator lever and engage the hand brake cable conduit retainers (2) to the cable bracket.
7. Enable the hand brake cable adjuster. Refer to Hand brake Cable Adjuster Enabling .
8. Bleed the hydraulic brake system. Refer to Hydraulic Brake System Bleeding : Pressure .
9. Install the tyre and wheel assembly. Refer to Tyre and Wheel Removal and Installation .

&#169© Copyright Chevrolet. All rights reserved

Front Brake Calliper Overhaul

Disassembly Procedure

Warning: Refer to Brake Dust Warning in the Preface section.

Warning: Refer to Brake Fluid Irritant Warning in the Preface section.

Warning: Do not place fingers in front of the calliper piston(s) in an attempt to catch or protect it when applying compressed air. The piston(s) can fly out with force and could result in serious bodily injury.

Caution: Use clean cloths to pad interior of calliper housing during piston removal. Use just enough air to ease the pistons out of the bores. If the pistons are blown out, even with the padding provided, it may be damaged.

1. Remove the brake calliper from the vehicle. Refer to Front Brake Calliper Replacement .

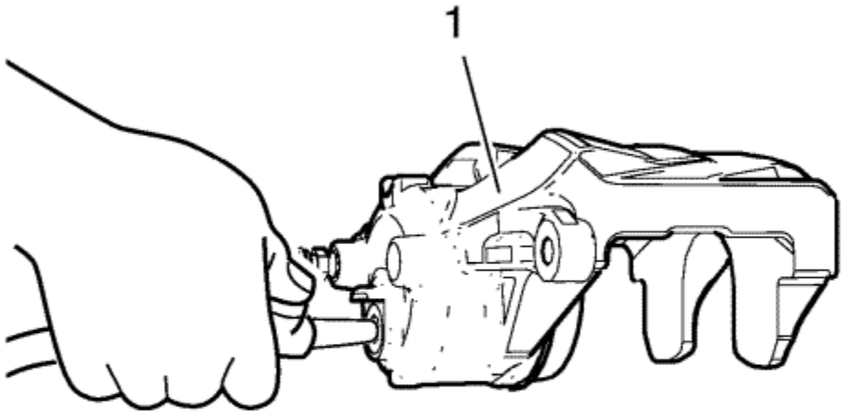

2. Remove the brake calliper piston from the calliper bore by directing low pressure compressed air into the calliper (1) through the fluid inlet hole.

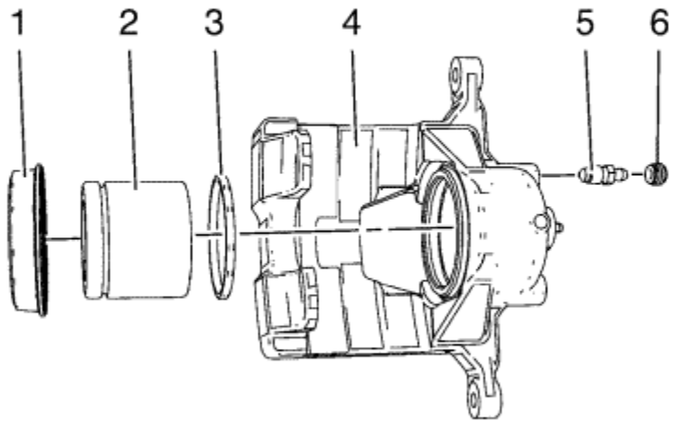

3. Remove the piston dust boot seal (1) from the seal counterbore in the calliper (4). Discard the boot seal.
4. Using a small wooden or plastic tool, remove the piston seal (3) from the calliper bore. Discard the piston seal.
5. Remove the bleeder valve cap (6).
6. Remove the bleeder valve (5).

   Note: Do not use abrasives to clean the brake calliper piston.

7. If cracks, scoring, pitting, excessive rust, and/or excessive corrosion are present in the calliper bore, replace the calliper assembly.
8. If light rust or light corrosion are present in the calliper bore, attempt to remove the imperfection with a fine emery paper. If the imperfection cannot be removed, replace the calliper assembly.
9. Clean the brake calliper piston bore and seal counterbore, and the calliper piston with methylated spirit, or equivalent.
10. Dry the calliper piston bore and counterbore, and the piston with non-lubricated, filtered, compressed air.
11. Inspect the calliper piston for cracks, scoring, and/or damage to the plating. Replace the calliper piston if any of these conditions exist.
12. Inspect the calliper mounting holes for cracks, scoring, pitting, rust and/or excessive corrosion. Replace the calliper assembly if any of these conditions exist.

Assembly Procedure

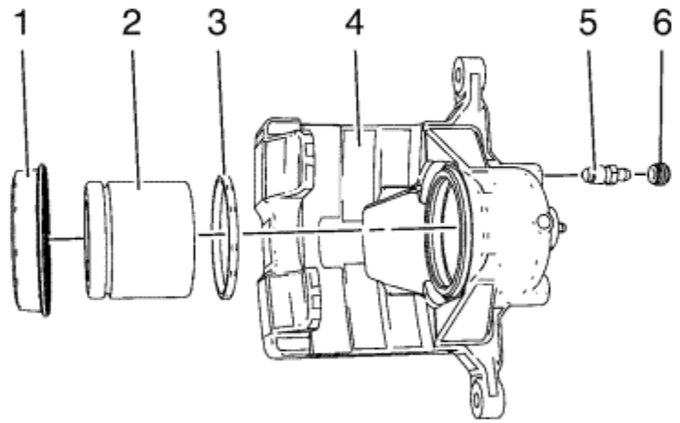

1. Lubricate the new piston seal (3) with brake fluid from a clean, sealed brake fluid container. Refer to Adhesives, Fluids, Lubricants, and Sealers for the recommended brake fluid.
2. Install the lubricated, new piston seal (3) into the calliper bore.
3. Apply a thin coat of brake fluid from a clean, sealed brake fluid container. Refer to Adhesives, Fluids, Lubricants, and Sealers for the recommended brake fluid.

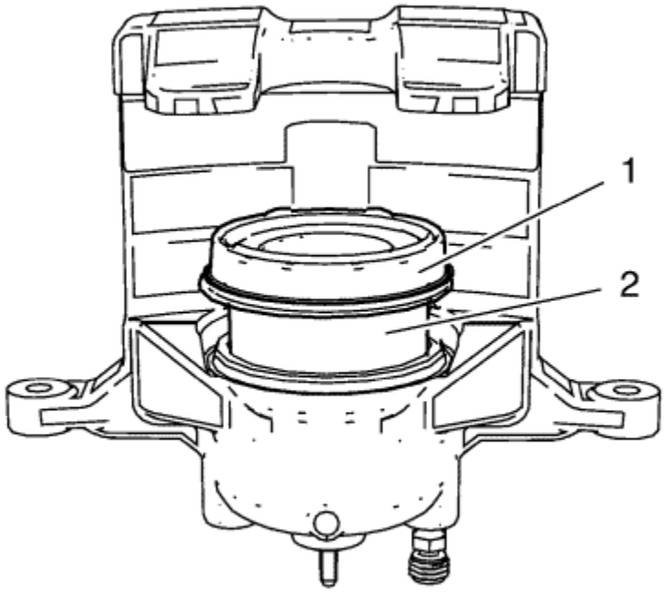

4. Install the bottom half of the calliper piston (2) into the calliper bore.
5. Install the new piston dust boot seal (1) over the calliper piston (2).
6. Compress the calliper piston (2) to the bottom of the calliper bore.
7. Fully seat the piston dust boot seal (1) into calliper counterbore.

Caution: Refer to Fastener Caution in the Preface section.

8. Install the bleeder valve (5) to the calliper and tighten the valve to **17 N·m (13 lb ft)**.
9. Install the bleeder valve cap (6).
10. Install the brake calliper to the vehicle. Refer to Front Brake Calliper Replacement .

© Copyright Chevrolet. All rights reserved

Rear Brake Calliper Overhaul

Disassembly

Warning: Refer to Brake Fluid Irritant Warning in the Preface section.

1. Remove the rear brake calliper from vehicle. Refer to Rear Brake Calliper Replacement .
2. Drain the brake fluid from the calliper assembly.

Note: If the brake calliper was leaking brake fluid from the REAR of the calliper past the integral hand brake actuator shaft seal, replace the brake calliper assembly. The hand brake integral mechanism contains a non-serviceable seal which may be allowing brake fluid to leak past it and into the non-serviceable integral hand brake mechanism.

3. Firmly clamp the calliper assembly (1) in a soft-jawed vice.
4. Using a small wooden or plastic tool, carefully remove the brake calliper piston dust boot seal retaining ring from the groove in the calliper seal counterbore.
5. Carefully rotate the calliper piston (2) counter-clockwise and remove the calliper piston from the brake calliper housing.
6. Remove the brake calliper piston dust boot seal (3) from the brake calliper housing.
7. Using a small wooden or plastic tool, remove the piston seal from the calliper bore and discard the piston seal.
8. Inspect the operation of the integral hand brake mechanism: Rotate the hand brake lever back and forth while observing the movement of the hand brake mechanism actuator assembly in the calliper bore.

Note: The hand brake lever, lever return spring and actuator shaft seal are not serviceable components of the integral hand brake mechanism. Do not disassemble the integral hand brake mechanism.

9. If the integral hand brake mechanism was not operating properly, binding or seized, replace the brake calliper assembly.

Note: Do not use abrasives to clean the brake calliper piston.

10. If cracks, scoring, pitting, and/or excessive corrosion are present in the calliper bore, replace the calliper assembly.
11. If light corrosion is present in the calliper bore, attempt to remove the imperfection with a fine emery paper. If the imperfection cannot be removed, replace the calliper assembly.
12. Clean the brake calliper piston bore and seal counterbore, the calliper piston, and the calliper sleeves with denatured alcohol, or equivalent.
13. Dry the calliper piston bore and counterbore, the piston, and the sleeves with non-lubricated, filtered compressed air.
14. Inspect the calliper piston for cracks, scoring, damage to the plating, and/or damage to the integral adjusting mechanism. Replace the calliper piston if any of these

conditions exist.

15. Inspect the calliper mounting holes for cracks, scoring, pitting, and/or excessive corrosion. Replace the calliper assembly if any of these conditions exist.

Assembly

1. Lubricate the new piston seal with GM approved brake fluid from a clean, sealed brake fluid container. Refer to Adhesives, Fluids, Lubricants, and Sealers .
2. Install the new piston seal into the calliper bore.
3. Ensure the piston seal is seated squarely into the groove in the calliper bore and is not twisted.

4. Install the new dust boot seal (1) onto the calliper piston (2).

5. With the calliper housing (1) firmly secured in a soft-jawed vise, insert the calliper piston (2) into the calliper housing.
6. Using a spanner type wrench, rotate the piston clockwise while pushing the piston into the calliper housing bore.
7. When the calliper piston is fully seated into the calliper housing, align the notches in the calliper piston face to the pins on the inboard brake pad.
8. Fully seat the piston dust boot seal (3) in the calliper counterbore.
9. Install the piston dust boot seal retaining ring to the groove in the calliper counterbore.
10. Install the brake calliper to the vehicle. Refer to Rear Brake Calliper Replacement .

Inspect the brake calliper for brake fluid leaks while performing the hydraulic brake system bleeding procedure after the calliper has been installed to the vehicle. If the brake calliper leaks brake fluid from the FRONT of the calliper past the piston dust boot seal, replace the calliper piston assembly. The piston integral adjustment mechanism contains a non-serviceable seal which may be allowing brake fluid to leak past it through a bleed hole near the end of the calliper piston.

© Copyright Chevrolet. All rights reserved

Front Brake Calliper Hardware Replacement

Removal Procedure

Warning: Refer to Brake Dust Warning in the Preface section.

Danger: Do not use a service jack in locations other than those specified to lift this vehicle. Lifting the vehicle with a jack in those other locations could cause the vehicle to slip off the jack and roll; this could cause injury or death.

1. Raise and support the vehicle. Refer to Lifting and Jacking the Vehicle .
2. Remove the tyre and wheel assembly. Refer to Tyre and Wheel Removal and Installation .

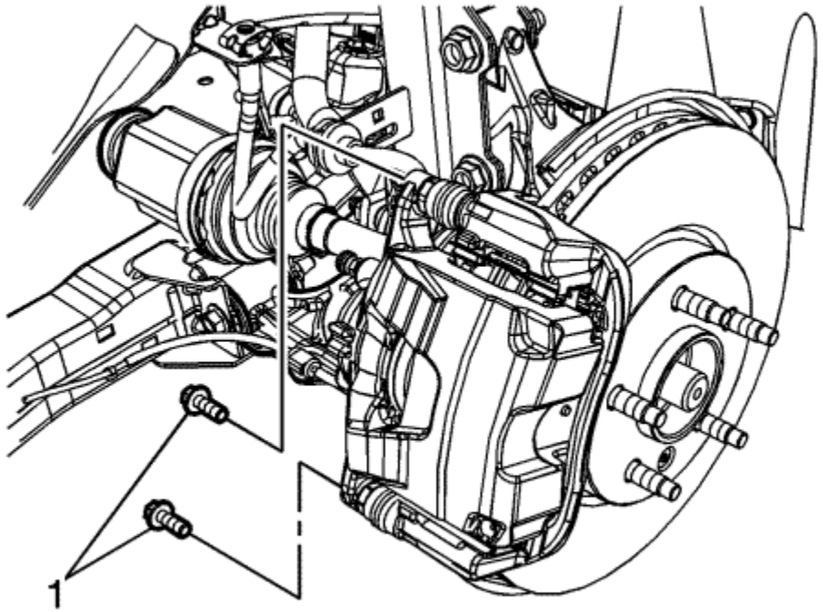

Note:

- DO NOT use any air tools to remove or install the guide pin bolts. Use hand tools ONLY.
- Install an open end wrench to hold the calliper guide pin in line with the brake calliper while removing or installing the calliper guide pin bolt. DO NOT allow the open end wrench to come in contact with the brake calliper. Allowing the open end wrench to come in contact with the brake calliper will cause a pulsation when the brakes are applied.

3. Hold the brake calliper guide pin stationary and remove the brake calliper guide pin bolts (1).

   Caution: Support the brake calliper with heavy mechanic wire, or equivalent, whenever it is separated from its mount and the hydraulic flexible brake hose is still connected. Failure to support the calliper in this manner will cause the flexible brake hose to bear the weight of the calliper, which may cause damage to the brake hose and in turn may cause a brake fluid leak.

4. Remove the brake calliper and support with heavy mechanics wire or equivalent.

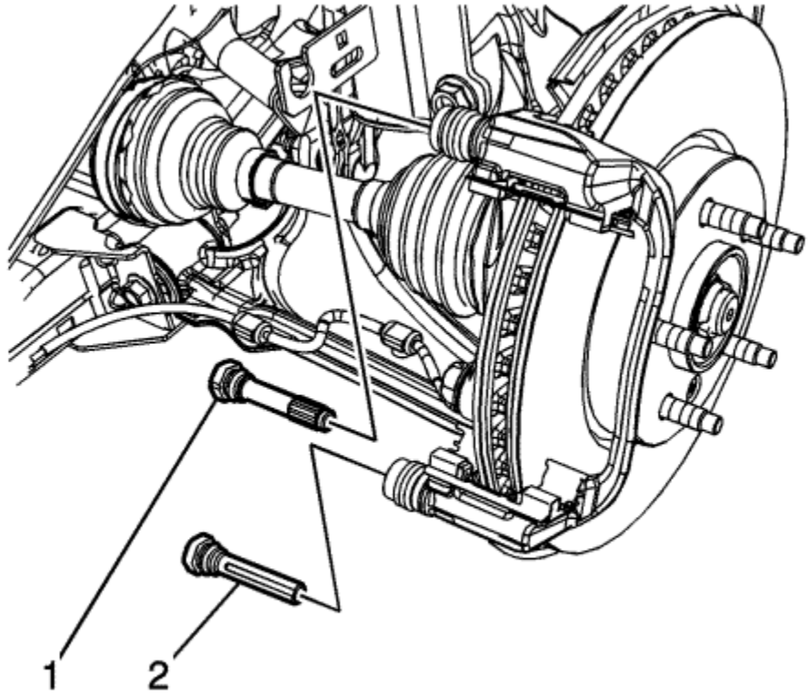

Note: The upper brake calliper guide pin is equipped with a bushing and must be installed in the same location.

5. Remove the upper brake calliper guide pin (1).
6. Remove the lower brake calliper guide pin (2).
7. Remove the 2 brake calliper guide pin seals.

Installation Procedure

1. Apply a light coat of high temperature silicone brake lubricant to the brake calliper guide pins.

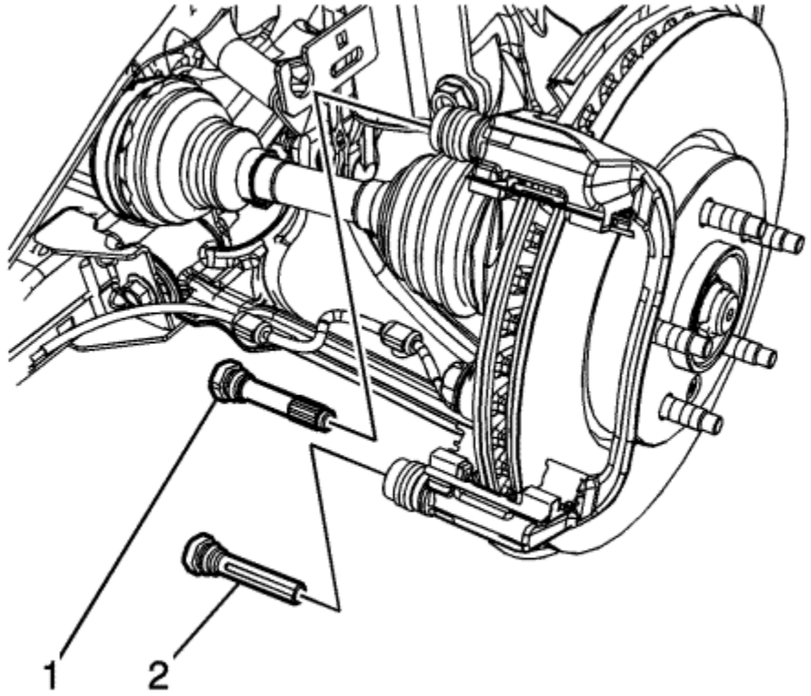

2. Install the 2 brake calliper guide pin seals.
3. Ensure the brake calliper guide pin seal is fully seated in the groove of the brake calliper bracket.

Note: The upper brake calliper guide pin is equipped with a bushing and must be installed in the same location.

4. Install the upper brake calliper guide pin (1).
5. Install the lower brake calliper guide pin (2).
6. Ensure the brake calliper guide pin seal is fully seated in the groove of the brake calliper guide pins.
7. Position the brake calliper over the brake pads and to the calliper bracket.

Caution: Refer to Fastener Caution in the Preface section.

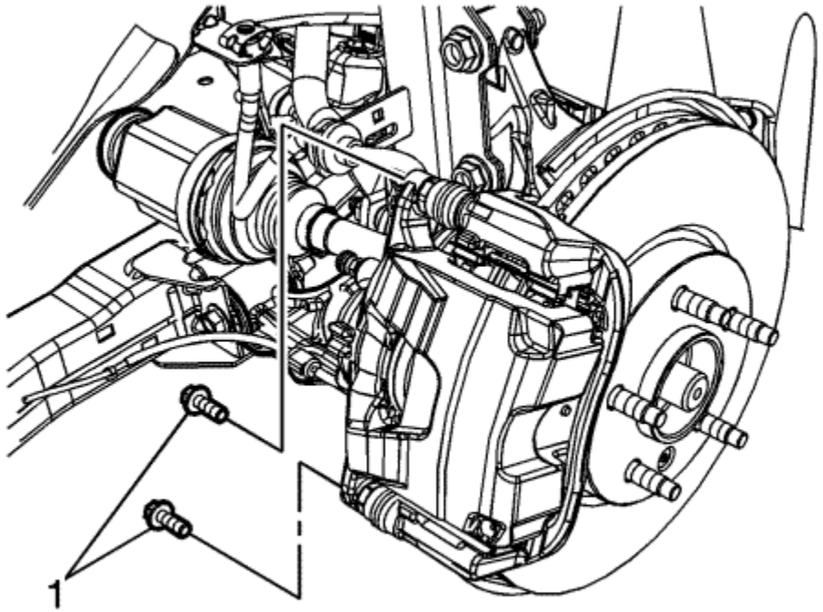

8. Using a backup wrench to hold the brake calliper guide pin stationary, install the brake calliper guide pin bolts (1) and tighten to **28 N·m (21 lb ft)**.
9. Install the tyre and wheel assembly. Refer to Tyre and Wheel Removal and Installation .

&#169© Copyright Chevrolet. All rights reserved

Rear Brake Calliper Hardware Replacement

Removal Procedure

Warning: Refer to Brake Dust Warning in the Preface section.

Danger: Do not use a service jack in locations other than those specified to lift this vehicle. Lifting the vehicle with a jack in those other locations could cause the vehicle to slip off the jack and roll; this could cause injury or death.

1. Raise and support the vehicle. Refer to Lifting and Jacking the Vehicle .
2. Remove the tyre and wheel assembly. Refer to Tyre and Wheel Removal and Installation .

Note:

- DO NOT use any air tools to remove or install the guide pin bolts. Use hand tools ONLY
- Install an open end wrench to hold the calliper guide pin in line with the brake calliper while removing or installing the calliper guide pin bolt. DO NOT allow the open end wrench to come in contact with the brake calliper. Allowing the open end wrench to come in contact with the brake calliper will cause a pulsation when the brakes are applied.

3. Using a backup wrench to hold the brake calliper guide pin (1) stationary, remove the brake calliper guide pin bolts (2).

Caution: Support the brake calliper with heavy mechanic wire, or equivalent, whenever it is separated from its mount and the hydraulic flexible brake hose is still connected. Failure to support the calliper in this manner will cause the flexible brake hose to bear the weight of the calliper, which may cause damage to the brake hose and in turn may cause a brake fluid leak.

4. Remove the brake calliper and support with heavy mechanics wire or equivalent.

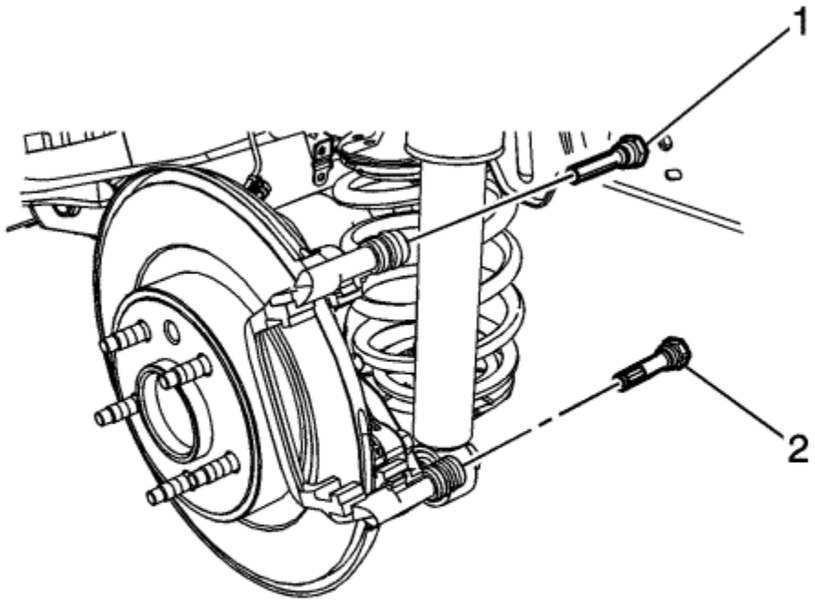

5. Remove the upper brake calliper guide pin (1).

   Note: The lower brake calliper guide pin is equipped with a bushing, and must be installed in the same location in the calliper bracket.

6. Remove the lower brake calliper guide pin (2).

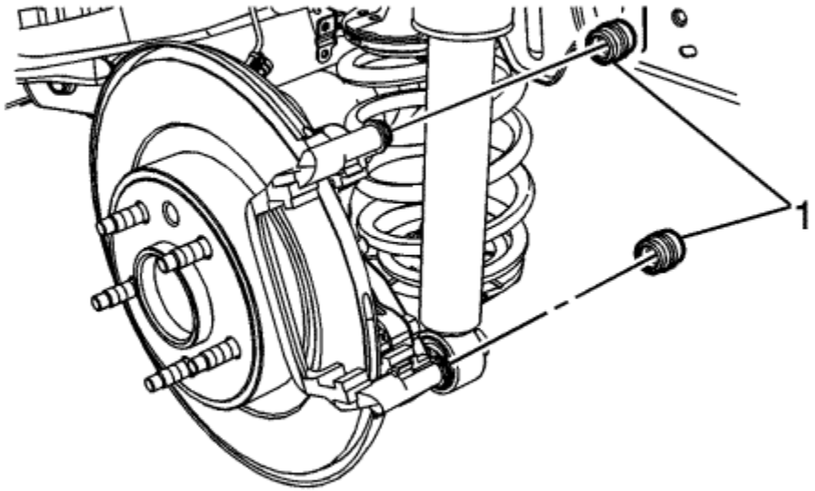

7. Remove the brake calliper guide pin seals (1).

Installation Procedure

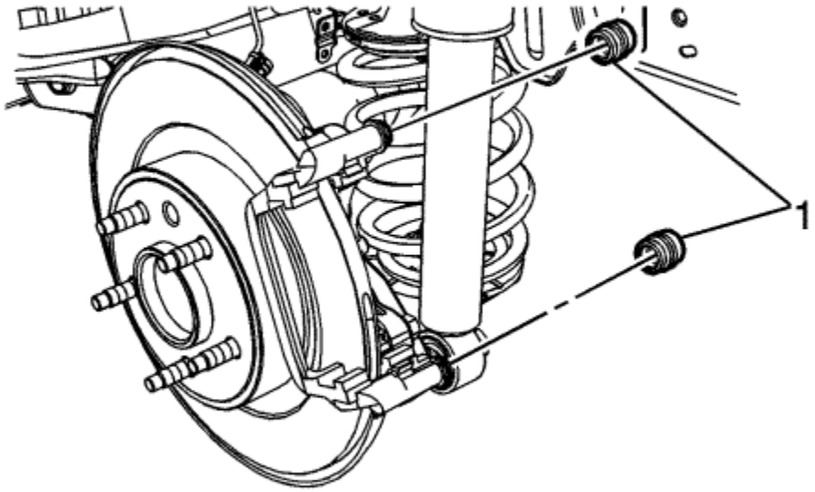

1. Install the brake calliper guide pin seals (1).
2. Ensure the brake calliper guide pin seals are fully seated in the groove of the brake calliper bracket.

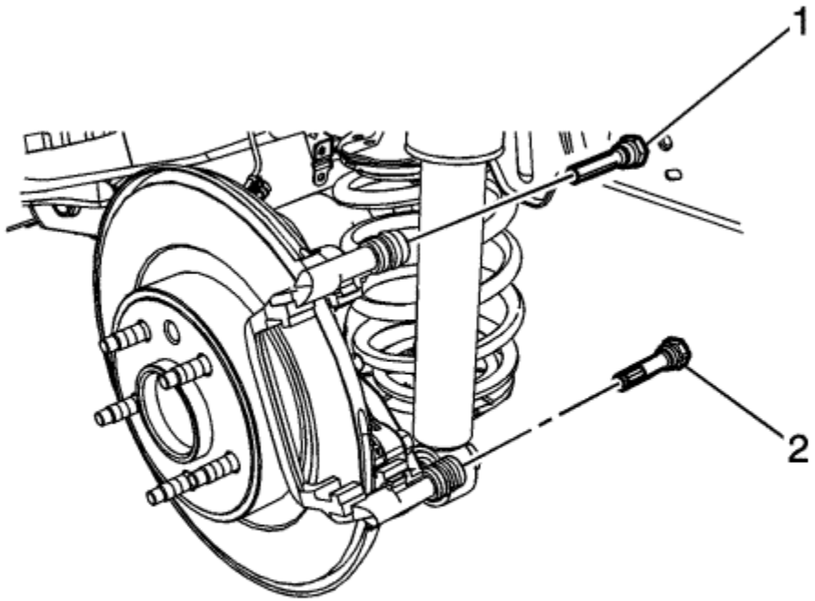

3. Install the upper brake calliper guide pin (1).

   Note: The lower brake calliper guide pin is equipped with a bushing, and must be installed in the same location in the calliper bracket.

4. Install the lower brake calliper guide pin (2).
5. Ensure the brake calliper guide pin seals are fully seated in the groove of the brake calliper guide pins.
6. Position the brake calliper over the brake pads and to the calliper bracket.

   Caution: Refer to Fastener Caution in the Preface section.

7. Using a backup wrench to hold the brake calliper guide pin (1) stationary, install the brake calliper guide pin bolts (2) and tighten to **28 N·m (21 lb ft)**.
8. Install the tyre and wheel assembly. Refer to Tyre and Wheel Removal and Installation .

&#169© Copyright Chevrolet. All rights reserved

Front Brake Calliper Bracket Replacement

Removal Procedure

Warning: Refer to Brake Dust Warning in the Preface section.

Danger: Do not use a service jack in locations other than those specified to lift this vehicle. Lifting the vehicle with a jack in those other locations could cause the vehicle to slip off the jack and roll; this could cause injury or death.

1. Raise and support the vehicle. Refer to Lifting and Jacking the Vehicle .
2. Remove the tyre and wheel assembly. Refer to Tyre and Wheel Removal and Installation .

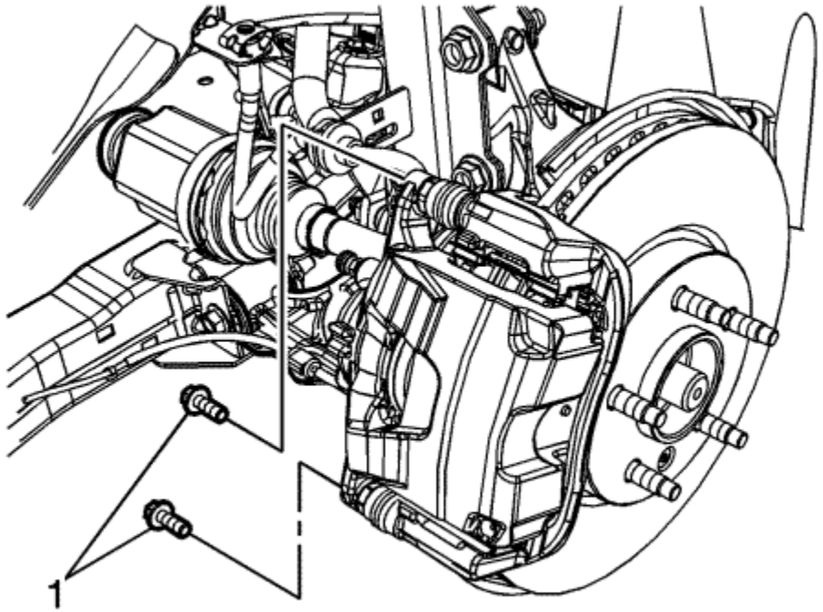

Note:

- DO NOT use any air tools to remove or install the guide pin bolts. Use hand tools ONLY.
- Install an open end wrench to hold the calliper guide pin in line with the brake calliper while removing or installing the calliper guide pin bolt. DO NOT allow the open end wrench to come in contact with the brake calliper. Allowing the open end wrench to come in contact with the brake calliper will cause a pulsation when the brakes are applied.

3. Hold the brake calliper guide pin stationary and remove the brake calliper guide pin bolts (1).

   Caution: Support the brake calliper with heavy mechanic wire, or equivalent, whenever it is separated from its mount and the hydraulic flexible brake hose is still connected. Failure to support the calliper in this manner will cause the flexible brake hose to bear the weight of the calliper, which may cause damage to the brake hose and in turn may cause a brake fluid leak.

4. Remove the brake calliper and support with heavy mechanics wire or equivalent.

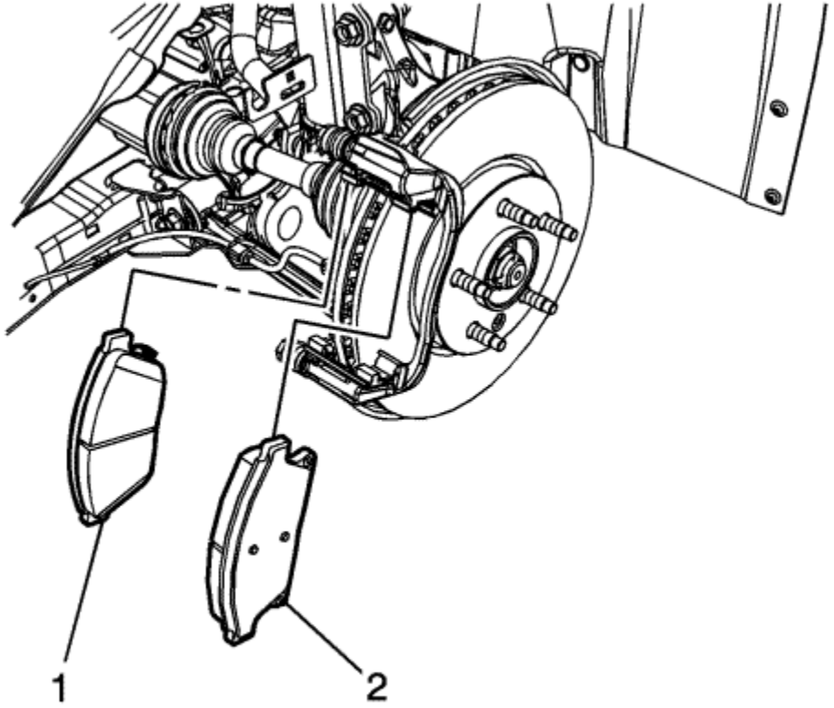

Note: Note the location of the wear sensor for correct installation.

5. Remove the inner brake pad (1).
6. Remove the outer brake pad (2).

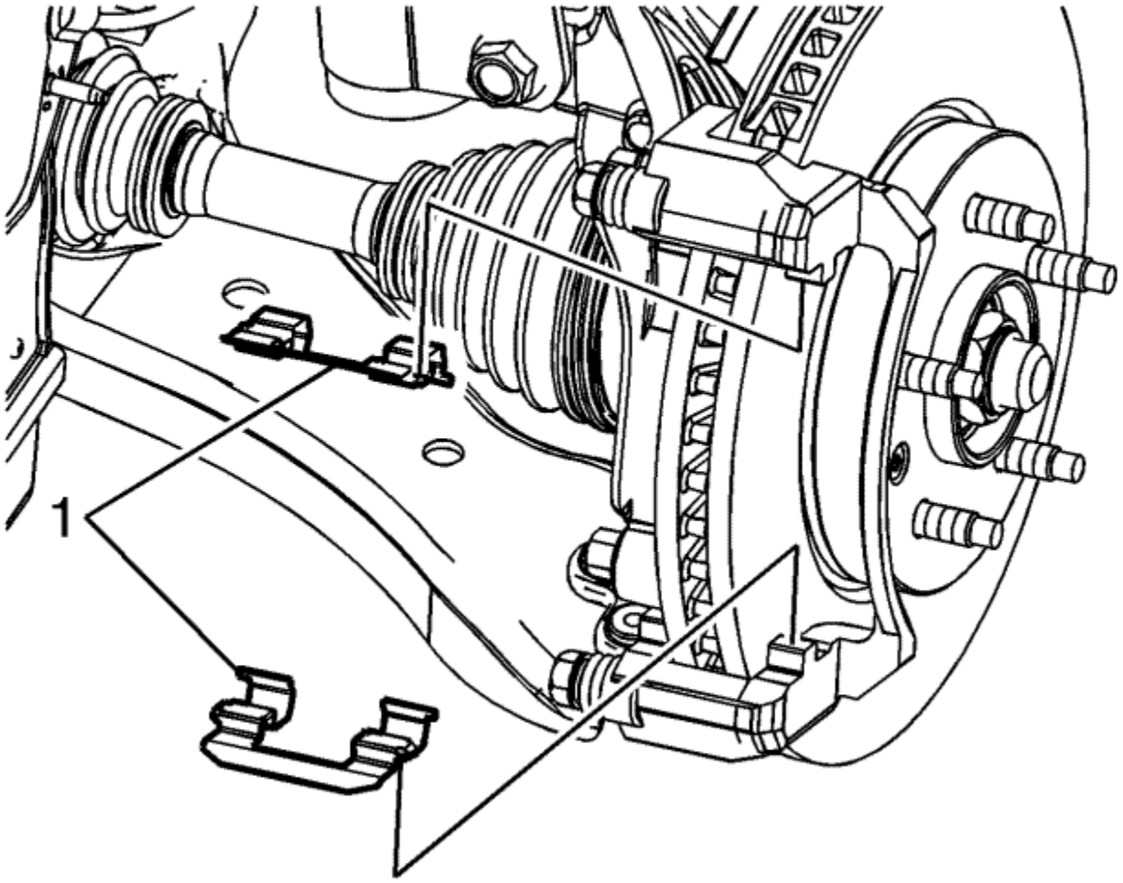

7. Remove the brake pad springs (1).

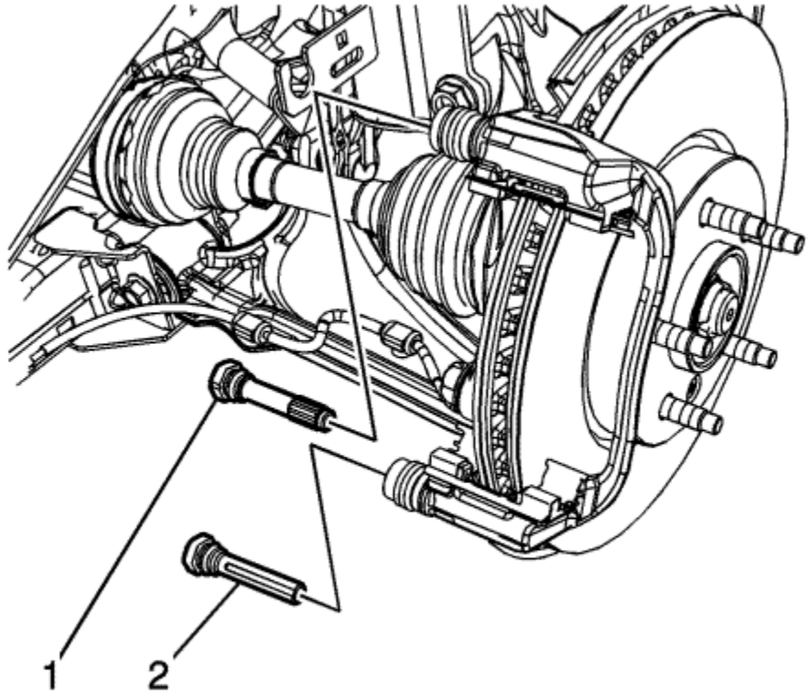

Note: The upper brake calliper guide pin is equipped with a bushing and must be installed in the same location.

8. Remove the upper brake calliper guide pin (1).
9. Remove the lower brake calliper guide pin (2).
10. Remove the 2 brake calliper guide pin seals.

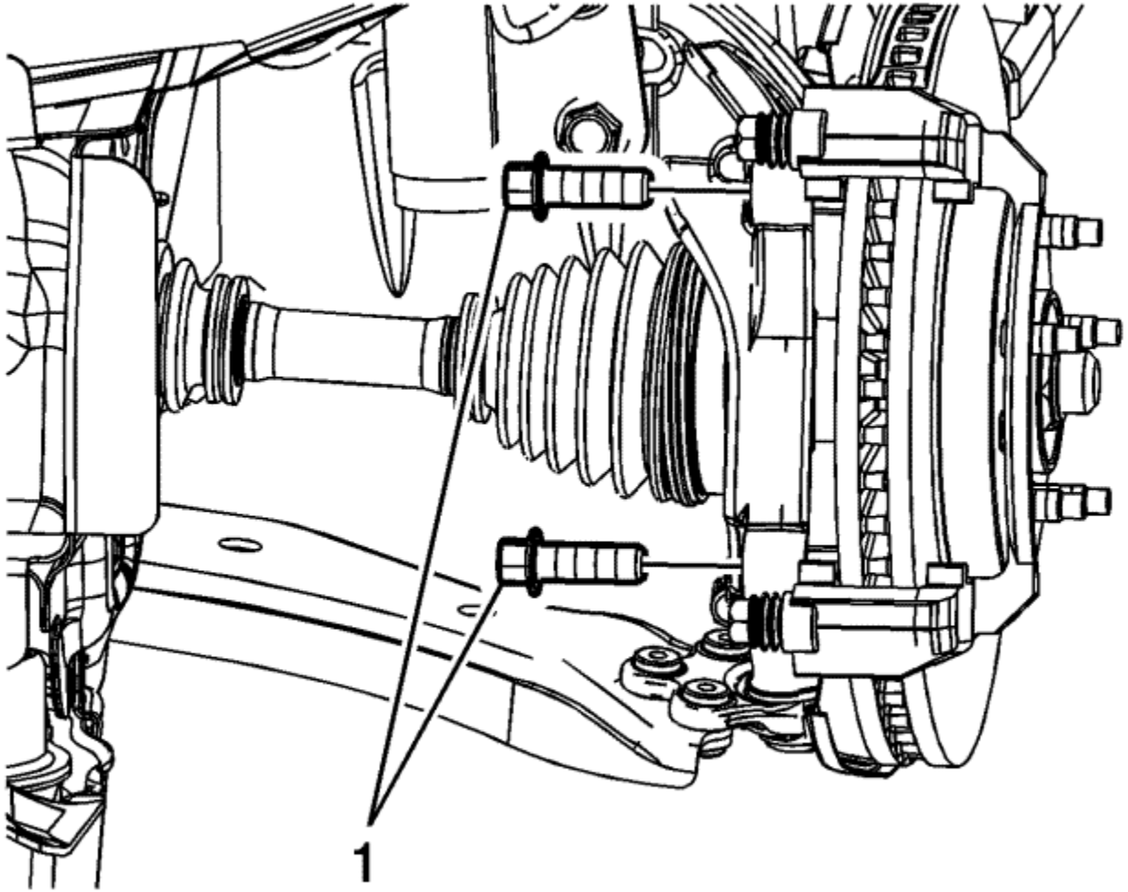

Note: Do not reuse the brake calliper bracket bolts.

11. Remove and discard the brake calliper bracket bolts (1).

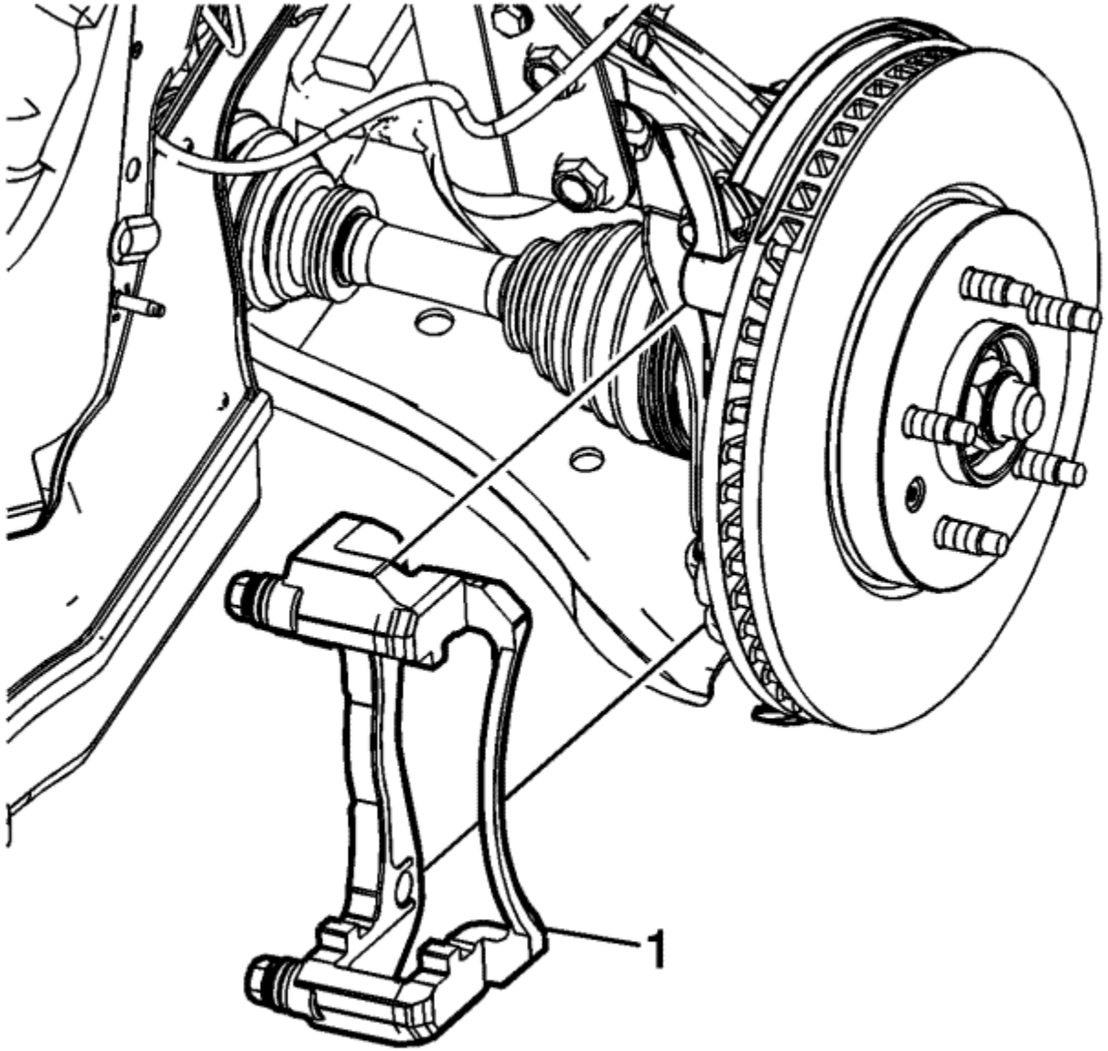

12. Remove the brake calliper bracket (1).

Installation Procedure

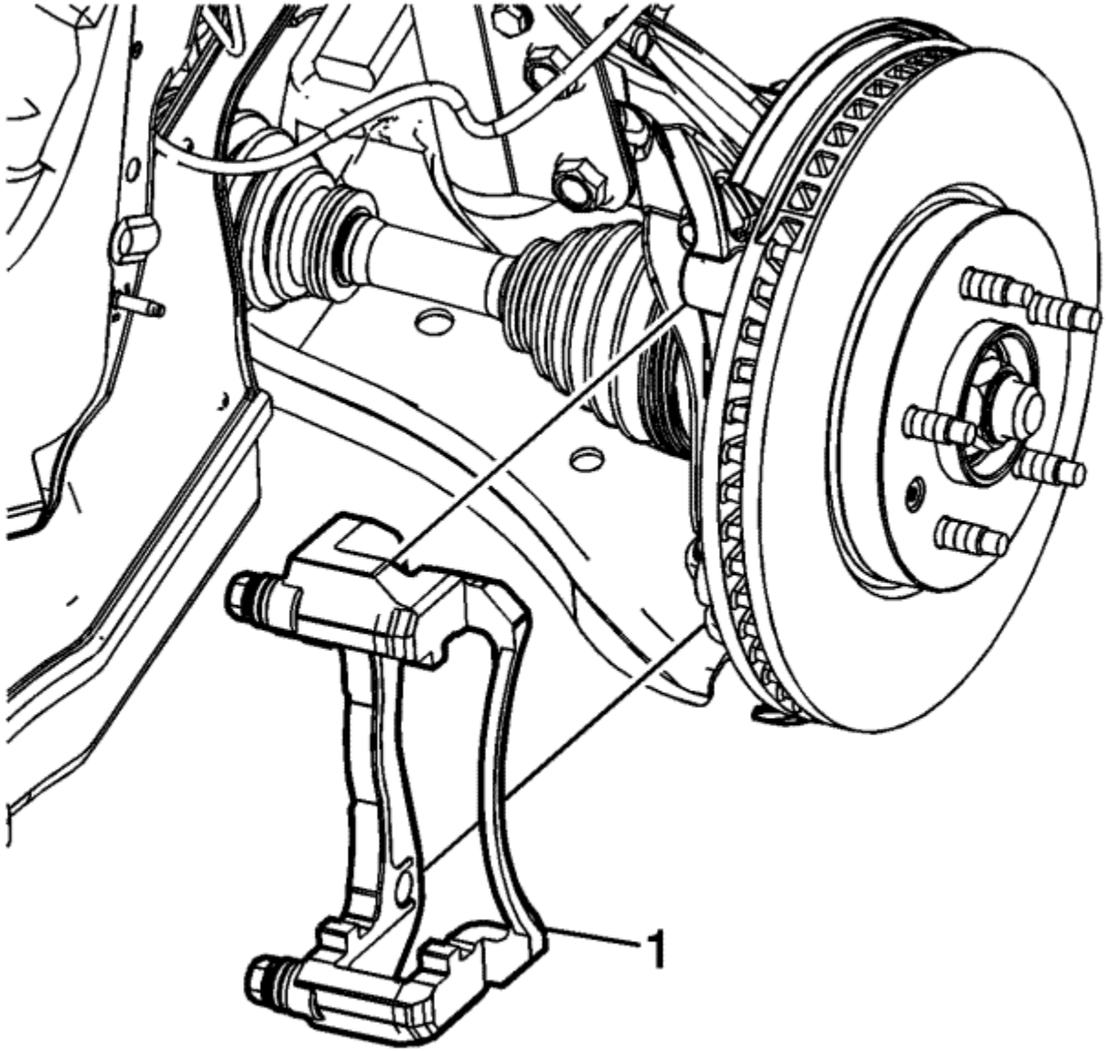

1. Install the brake calliper bracket (1).

   Caution: Refer to Fastener Caution in the Preface section.

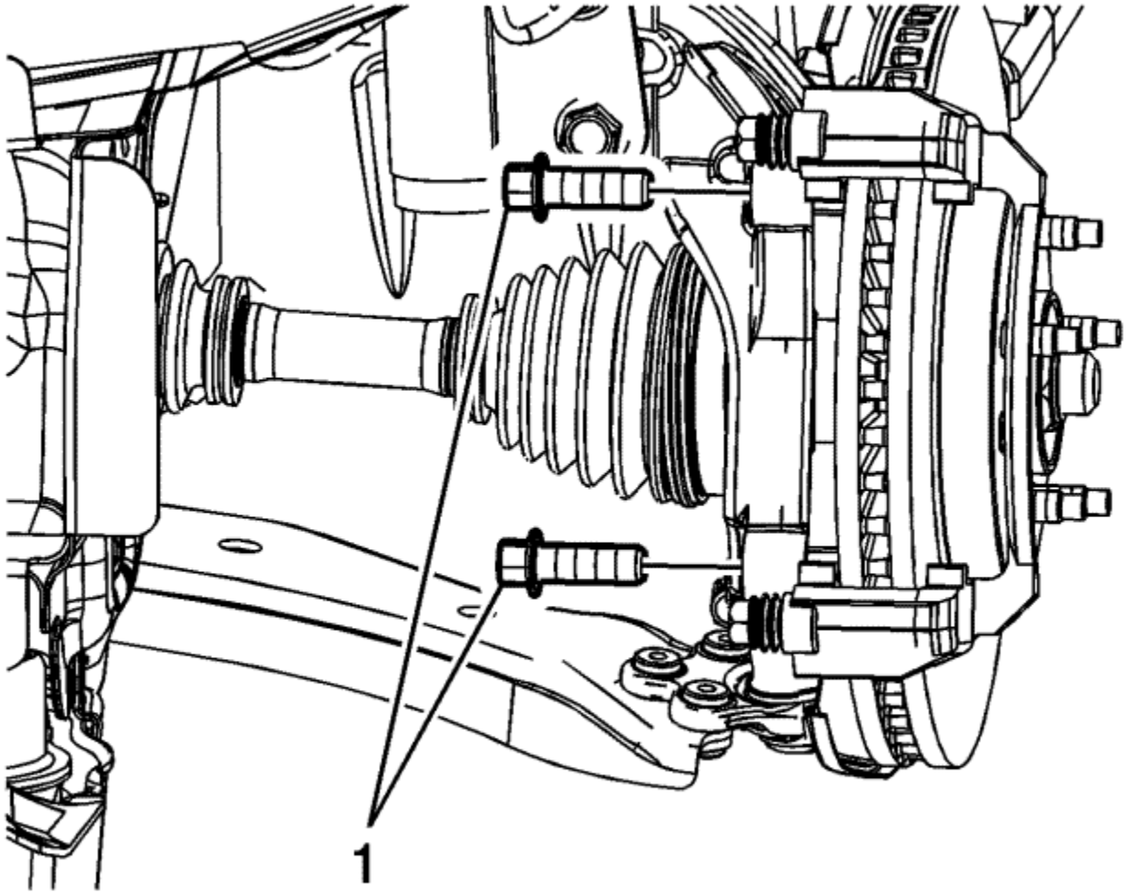

2. Install 2 new brake calliper bracket bolts (1).
   2.1. Tighten the bolts a first pass to **100 N·m (74 lb ft)**.
   2.2. Tighten the bolts a second pass an additional **60 degrees**.
   2.3. Tighten the bolts a final pass an additional **15 degrees**.

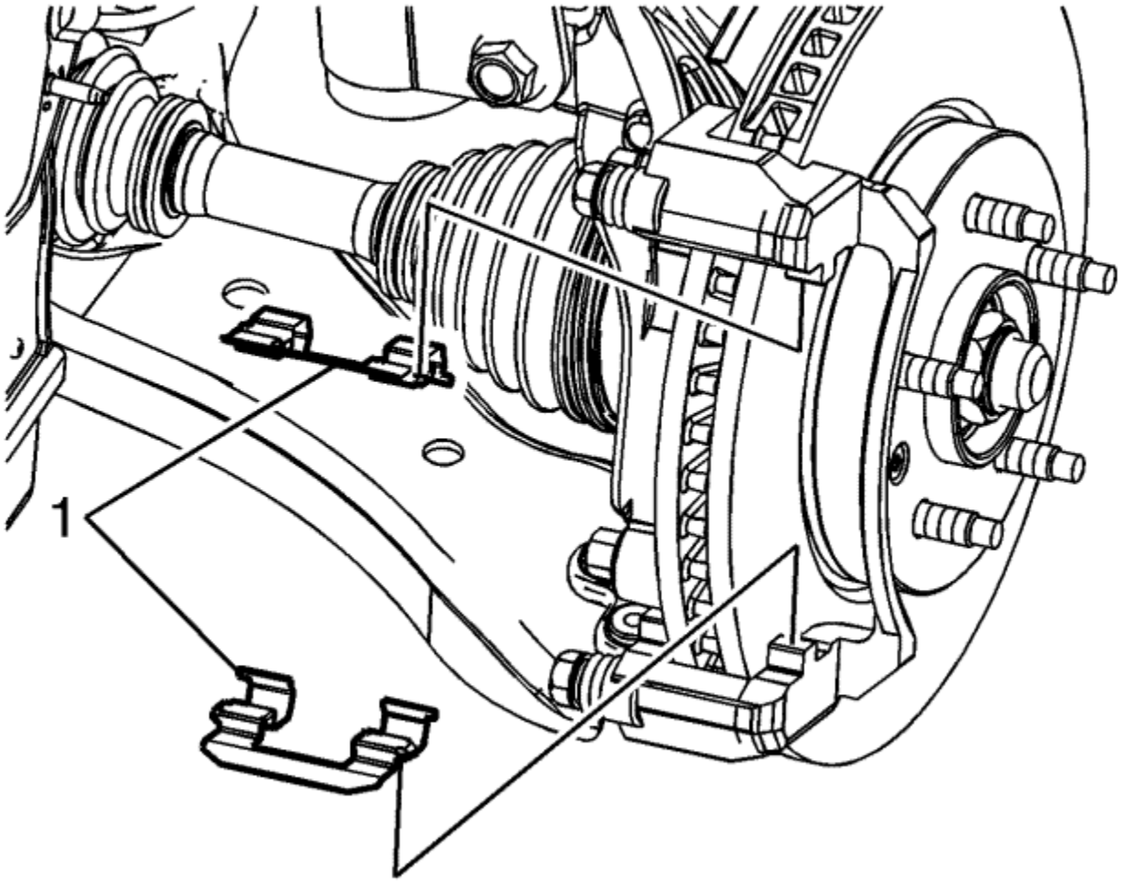

3. Install the brake pad springs (1).

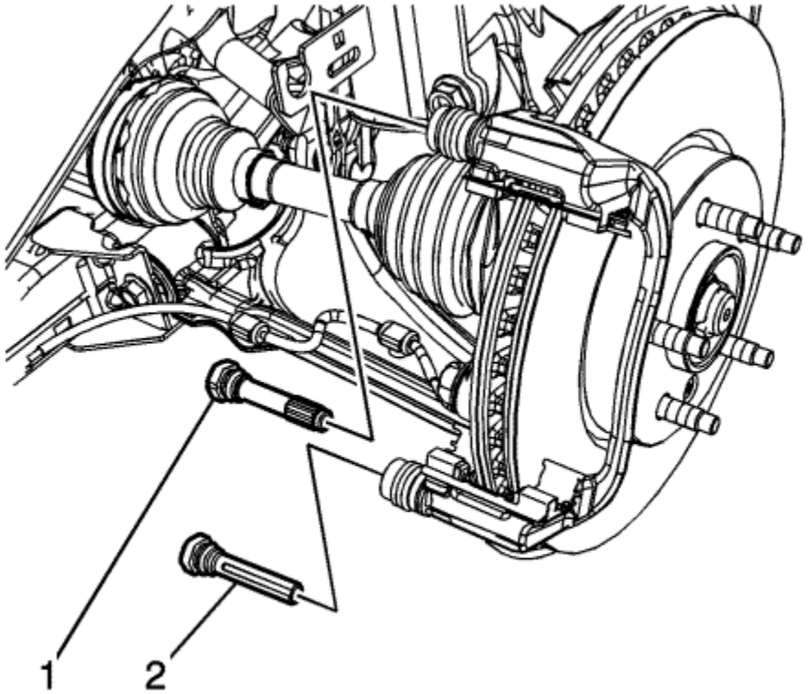

4. Install the 2 brake calliper guide pin seals.
5. Ensure the brake calliper guide pin seals are fully seated in the groove of the brake calliper bracket.

Note: The upper brake calliper guide pin is equipped with a bushing and must be installed in the same location.

6. Install the upper brake calliper guide pin (1).
7. Install the lower brake calliper guide pin (2).
8. Ensure the brake calliper guide pin seals are fully seated in the groove of the brake calliper guide pins.

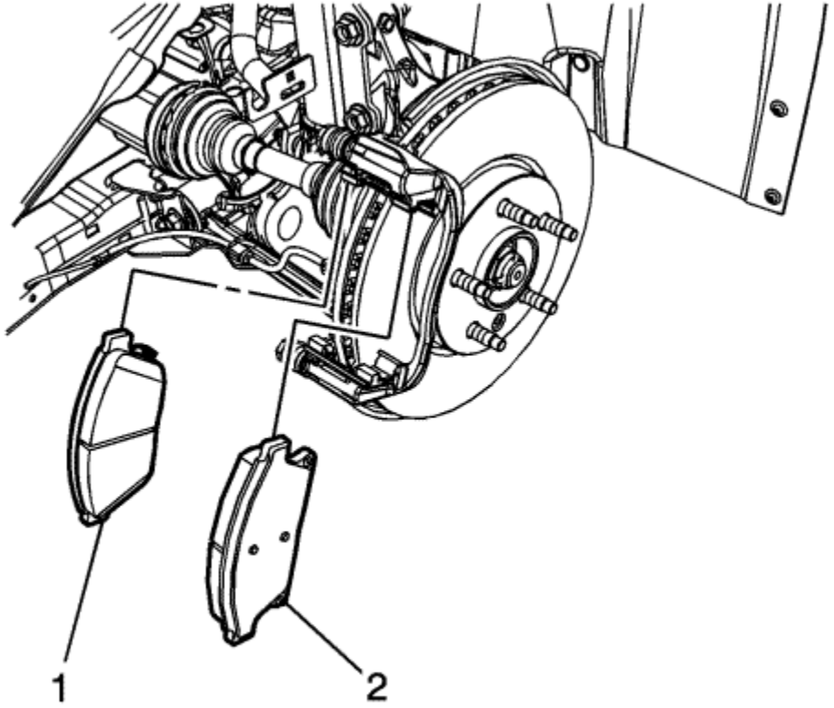

Note: Note the location of the wear sensor for correct installation.

9. Install the inner brake pad (1).
10. Install the outer brake pad (2).
11. Position the brake calliper over the brake pads and to the calliper bracket.

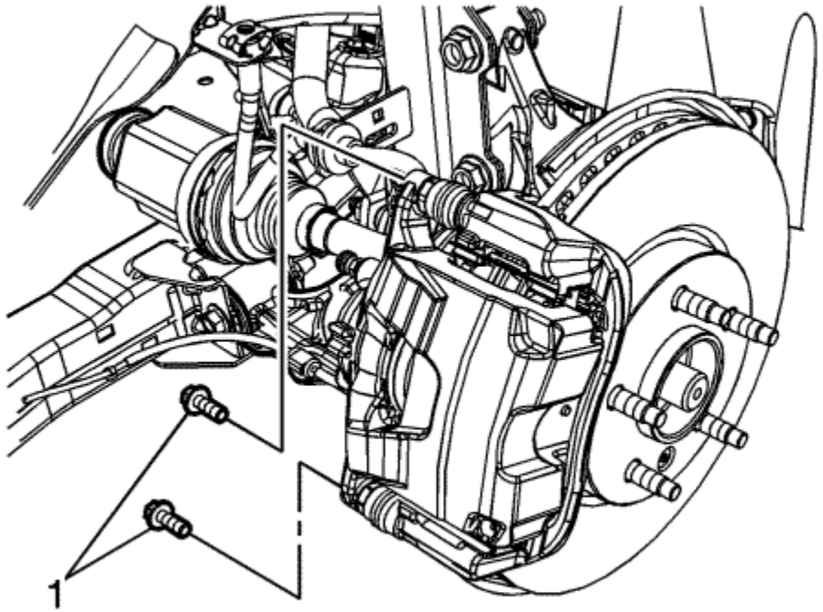

12. Using a backup wrench to hold the brake calliper guide pin stationary, install the brake calliper guide pin bolts (1) and tighten to **28 N·m (21 lb ft)**.
13. Install the tyre and wheel assembly. Refer to Tyre and Wheel Removal and Installation .

&#169© Copyright Chevrolet. All rights reserved

Rear Brake Calliper Bracket Replacement

Removal Procedure

Warning: Refer to Brake Dust Warning in the Preface section.

Danger: Do not use a service jack in locations other than those specified to lift this vehicle. Lifting the vehicle with a jack in those other locations could cause the vehicle to slip off the jack and roll; this could cause injury or death.

1. Raise and support the vehicle. Refer to Lifting and Jacking the Vehicle .
2. Remove the tyre and wheel assembly. Refer to Tyre and Wheel Removal and Installation .

Note:

- DO NOT use any air tools to remove or install the guide pin bolts. Use hand tools ONLY
- Install an open end wrench to hold the calliper guide pin in line with the brake calliper while removing or installing the calliper guide pin bolt. DO NOT allow the open end wrench to come in contact with the brake calliper. Allowing the open end wrench to come in contact with the brake calliper will cause a pulsation when the brakes are applied.

3. Using a backup wrench to hold the brake calliper guide pin (1) stationary, remove the brake calliper guide pin bolts (2).

Caution: Support the brake calliper with heavy mechanic wire, or equivalent, whenever it is separated from its mount and the hydraulic flexible brake hose is still connected. Failure to support the calliper in this manner will cause the flexible brake hose to bear the weight of the calliper, which may cause damage to the brake hose and in turn may cause a brake fluid leak.

4. Remove the brake calliper and support with heavy mechanics wire or equivalent.

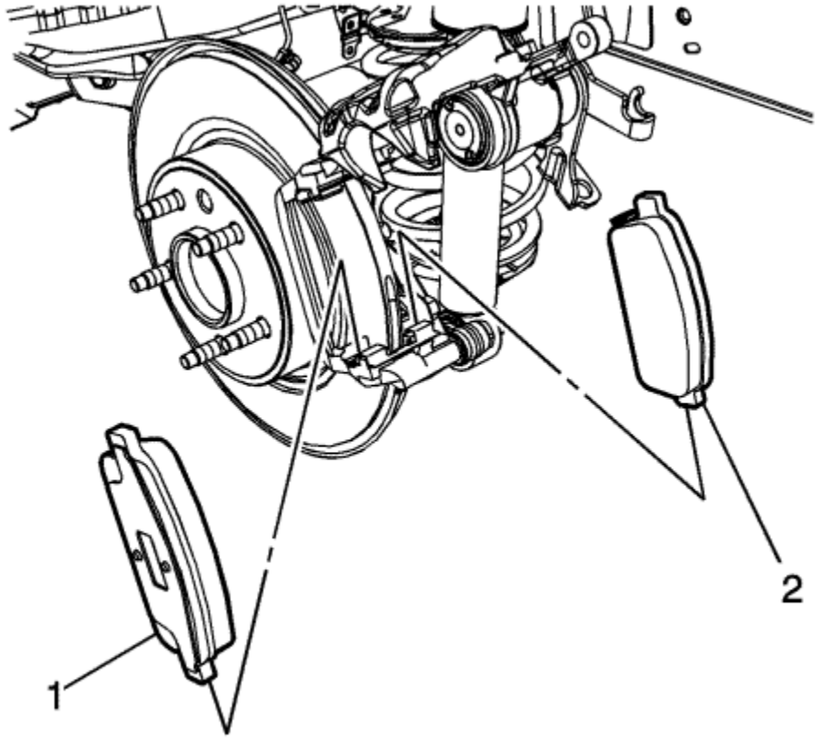

Note: Note the location of the brake pad wear sensor for correct installation.

5. Remove the outer brake pad (1).
6. Remove the inner brake pad (2).

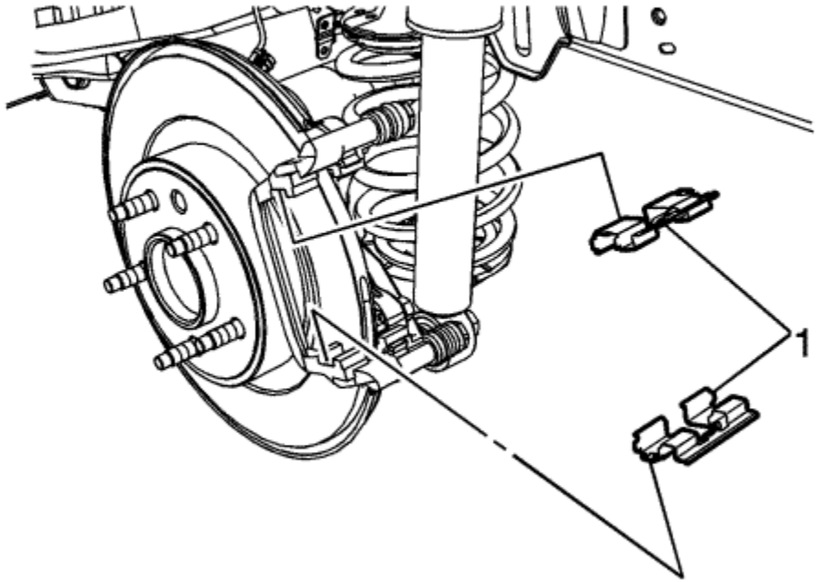

7. Remove the brake pad springs (1).

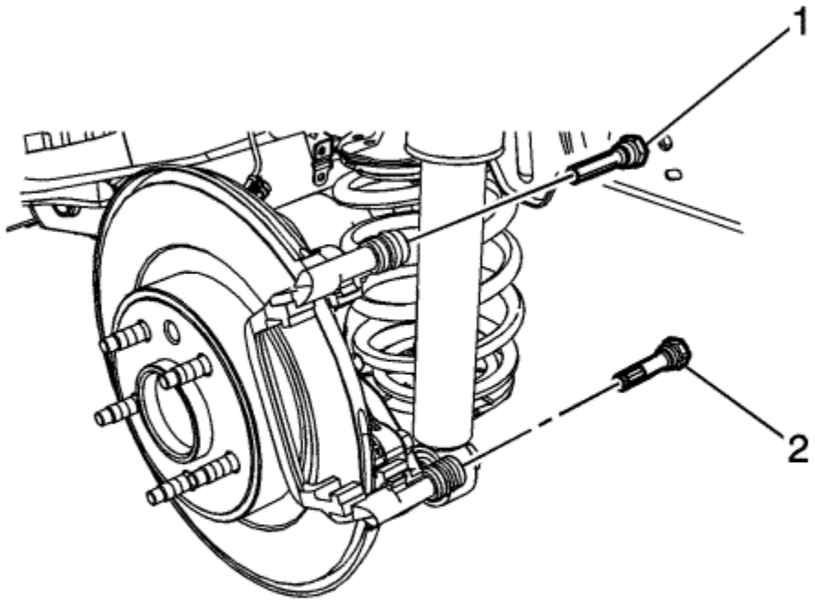

8. Remove the upper brake calliper guide pin (1).

   Note: The lower brake calliper guide pin is equipped with a bushing, and must be installed in the same location in the calliper bracket.

9. Remove the lower brake calliper guide pin (2).

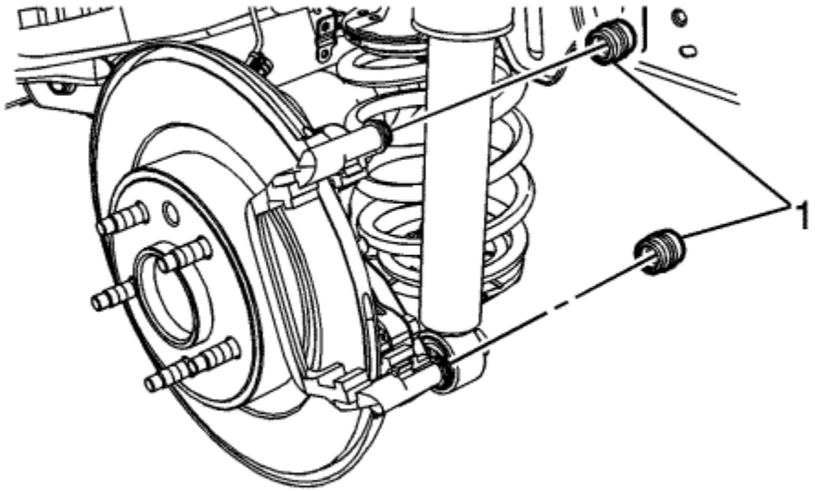

10. Remove the brake calliper guide pin seals (1).

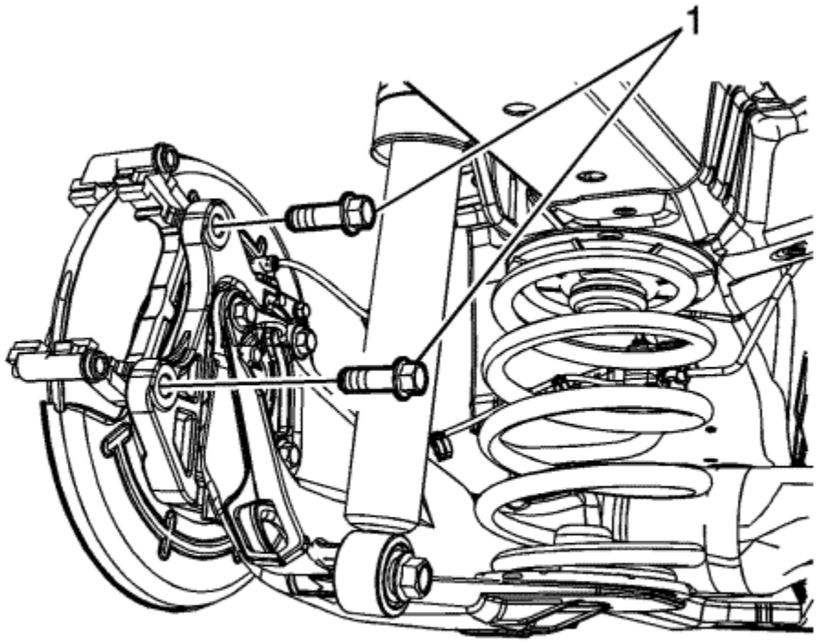

Note: Do not reuse the brake calliper bracket bolts.

11. Remove and discard the brake calliper bracket bolts (1).

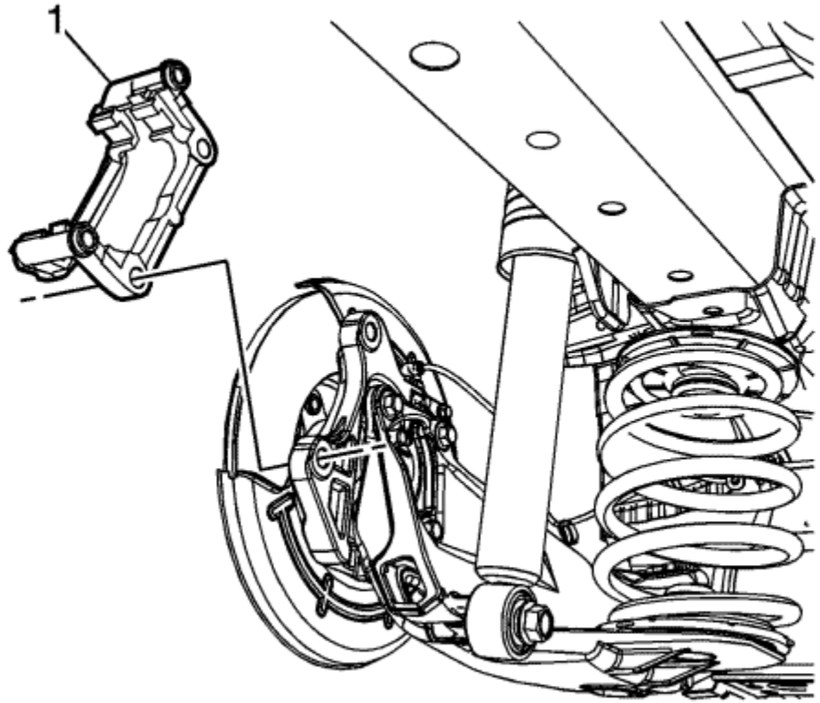

12. Remove the brake calliper bracket (1).

Installation Procedure

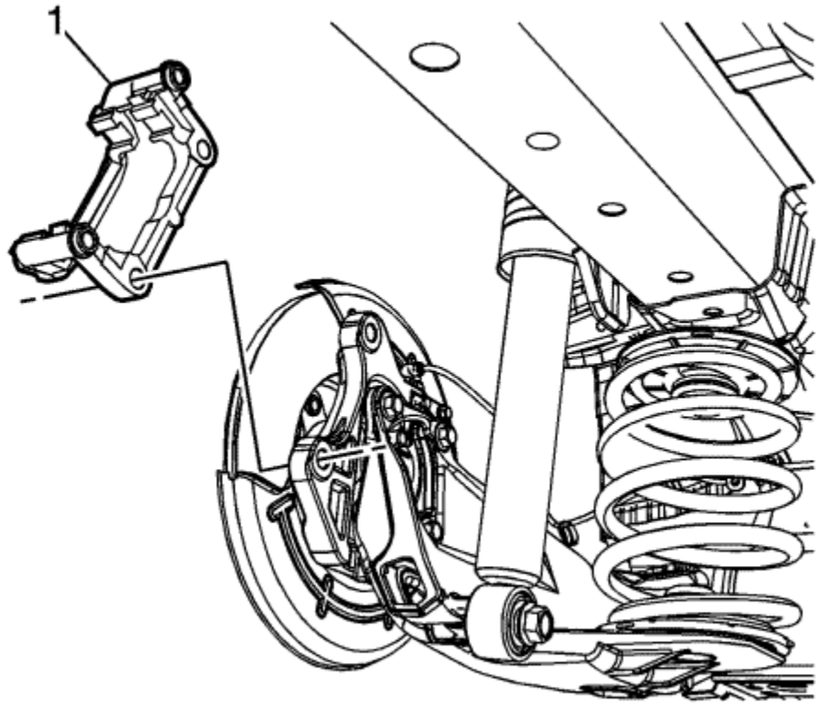

1. Install the brake calliper bracket (1).

   Caution: Refer to Fastener Caution in the Preface section.

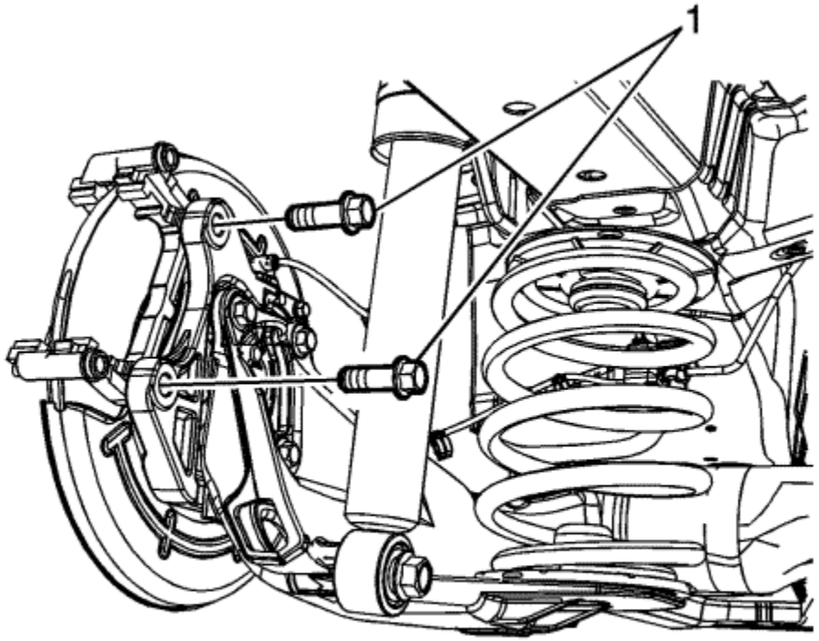

2. Install 2 new brake calliper bracket bolts (1).
   2.1. Tighten the bolts a first pass to **90 N·m (67 lb ft)**.
   2.2. Tighten the bolts a final pass an additional **60 degrees**.

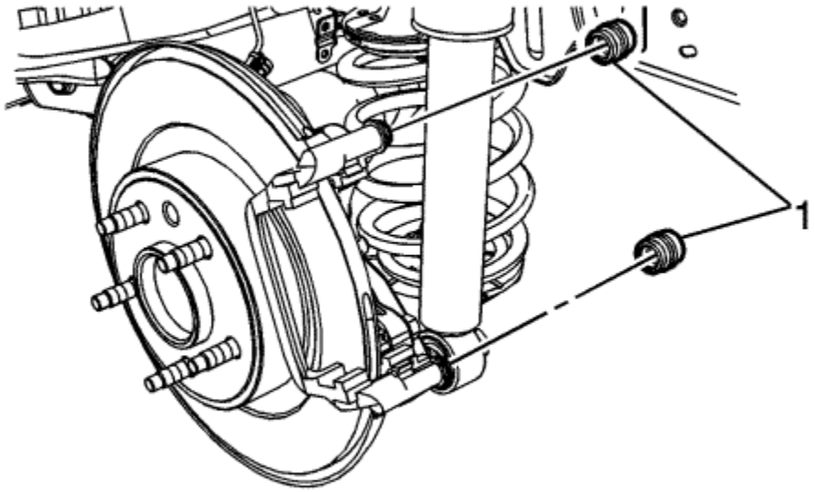

3. Install the brake calliper guide pin seals (1).
4. Ensure the brake calliper guide pin seals are fully seated in the groove of the brake calliper bracket.

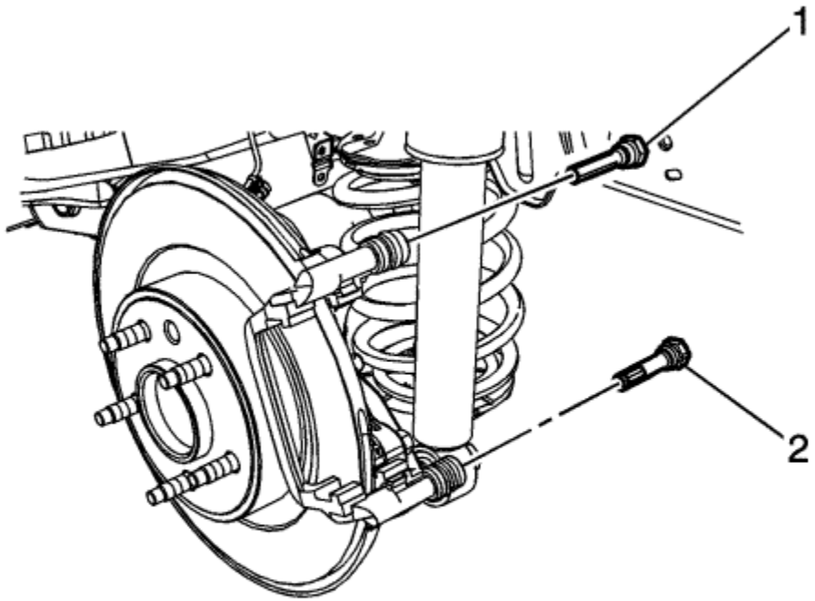

5. Install the upper brake calliper guide pin (1).

   Note: The lower brake calliper guide pin is equipped with a bushing, and must be installed in the same location in the calliper bracket.

6. Install the lower brake calliper guide pin (2).
7. Ensure the brake calliper guide pin seals are fully seated in the groove of the brake calliper guide pins.

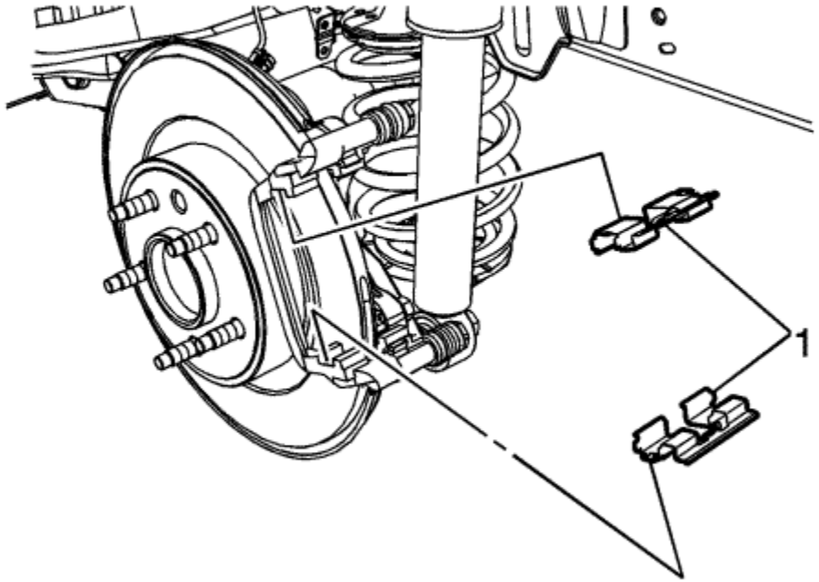

8. Install the brake pad springs (1).

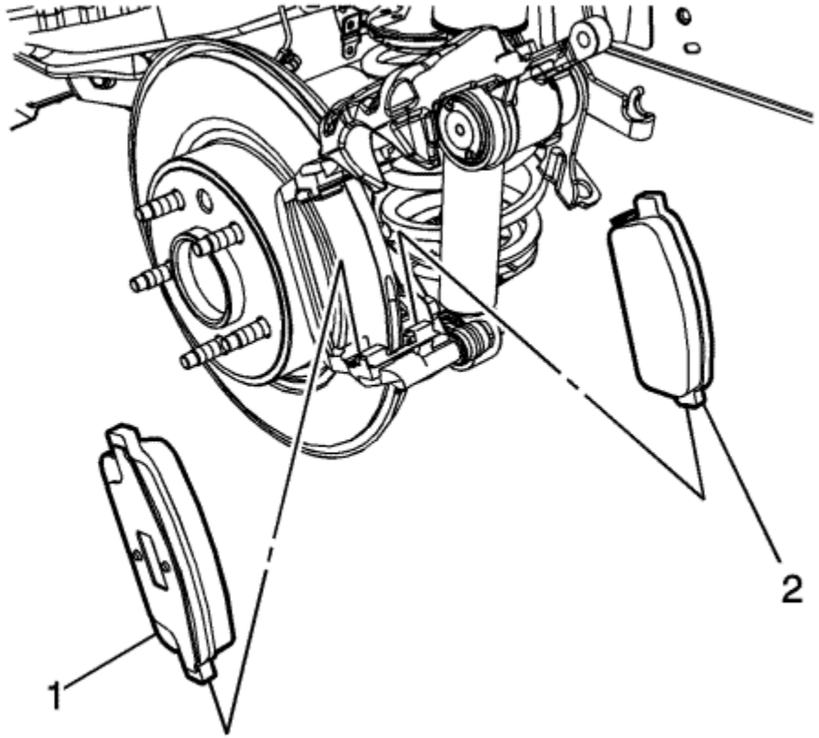

Note: Note the location of the brake pad wear sensor for correct installation.

9. Install the outer brake pad (1).
10. Install the inner brake pad (2).
11. Position the brake calliper over the brake pads and to the calliper bracket.

12. Using a backup wrench to hold the brake calliper guide pin (1) stationary, install the brake calliper guide pin bolts (2) and tighten to **28 N·m (21 lb ft)**.
13. Install the tyre and wheel assembly. Refer to Tyre and Wheel Removal and Installation .

&#169© Copyright Chevrolet. All rights reserved

Front Brake Disc Replacement

Special Tools

- *CH-41013* Disc Resurfacing Kit
- *CH-42450-A* Wheel Hub Resurfacing Kit

For equivalent regional tools, refer to Special Tools .

Removal Procedure

Warning: Refer to Brake Dust Warning in the Preface section.

Danger: Do not use a service jack in locations other than those specified to lift this vehicle. Lifting the vehicle with a jack in those other locations could cause the vehicle to slip off the jack and roll; this could cause injury or death.

1. Raise and support the vehicle. Refer to Lifting and Jacking the Vehicle .
2. Remove the tyre and wheel assembly. Refer to Tyre and Wheel Removal and Installation .

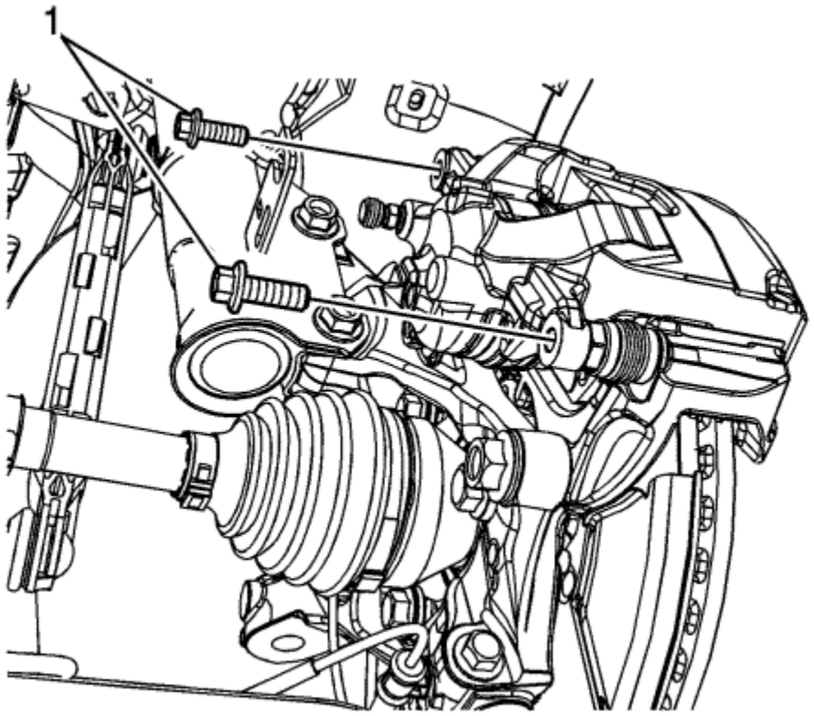

Note: Do not reuse the brake calliper bracket bolts.

3. Remove and discard the brake calliper bracket bolts (1).

   Caution: Support the brake calliper with heavy mechanic wire, or equivalent, whenever it is separated from its mount and the hydraulic flexible brake hose is still connected. Failure to support the calliper in this manner will cause the flexible brake hose to bear the weight of the calliper, which may cause damage to the brake hose and in turn may cause a brake fluid leak.

4. Remove the brake calliper and bracket as an assembly and support with heavy mechanics wire or equivalent.

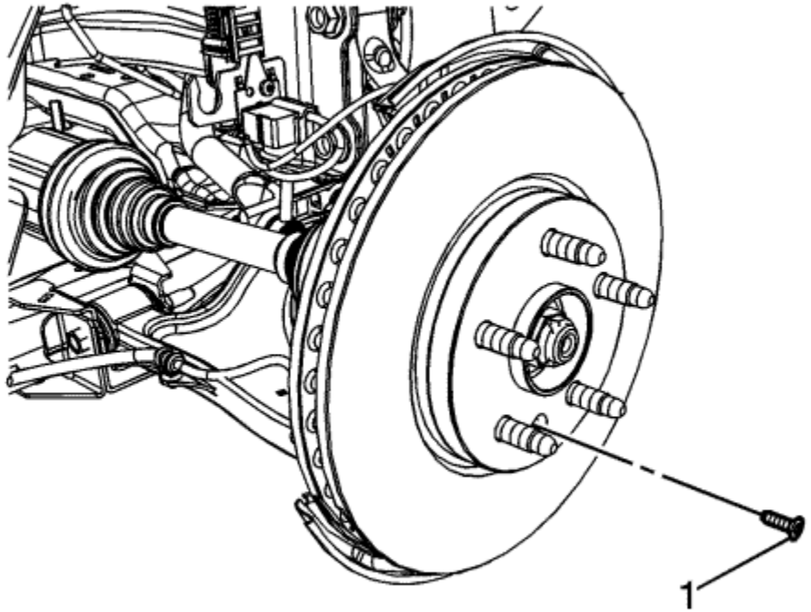

5. Remove the brake disc bolt (1).

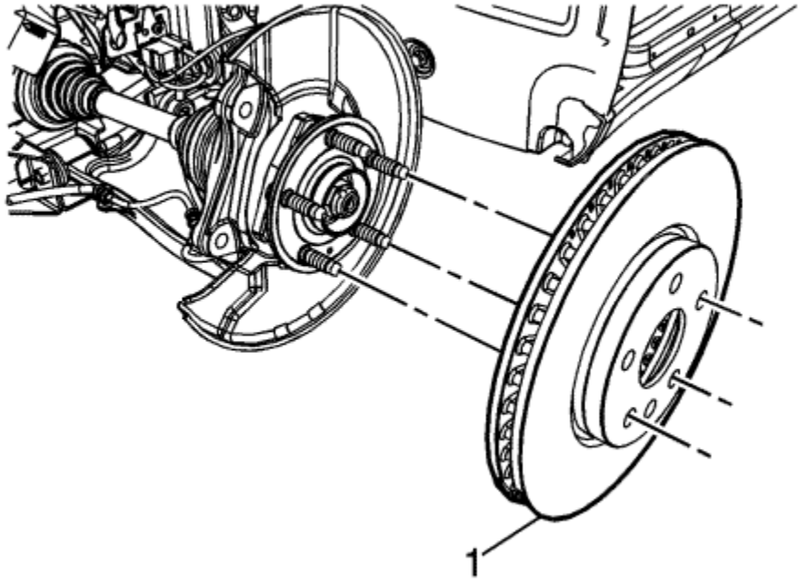

6. Remove the brake disc (1).

Installation Procedure

1. If installing a new brake disc, clean the friction surfaces of the brake disc with denatured alcohol or equivalent.
2. Using the *CH-42450-A* Wheel Hub Resurfacing Kit , thoroughly clean any rust or corrosion from the mating surface of the hub/axle flange.
3. Using the *CH-41013* Disc Resurfacing Kit , thoroughly clean any rust or corrosion from the mating surface of the disc to the hub/axle flange.

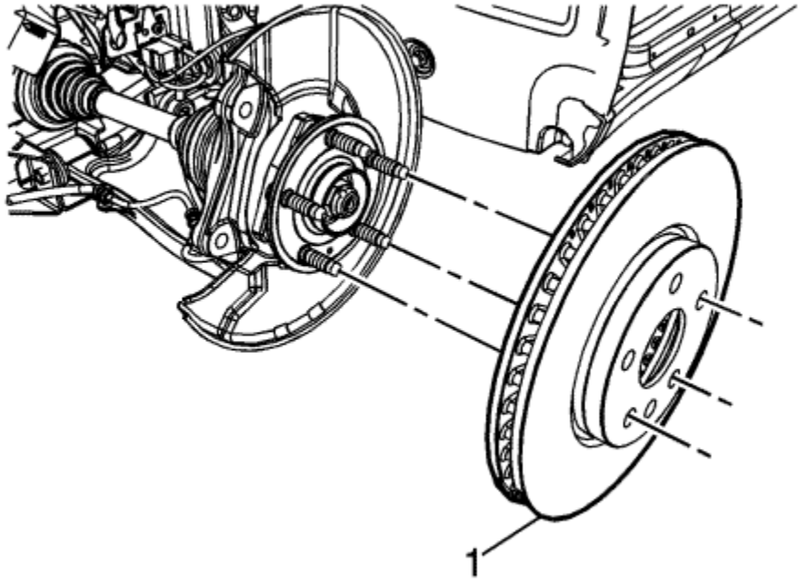

4. Install the brake disc (1).

   Caution: Refer to Fastener Caution in the Preface section.

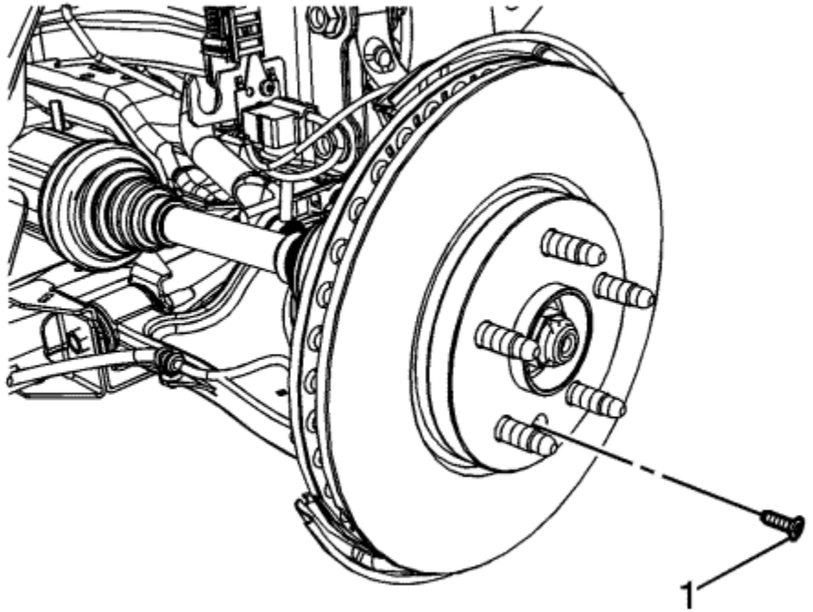

5. Install the brake disc bolt (1) and tighten to **9 N·m (80 lb in)**.
6. Position the brake calliper and bracket assembly over the brake disc and to the steering knuckle.

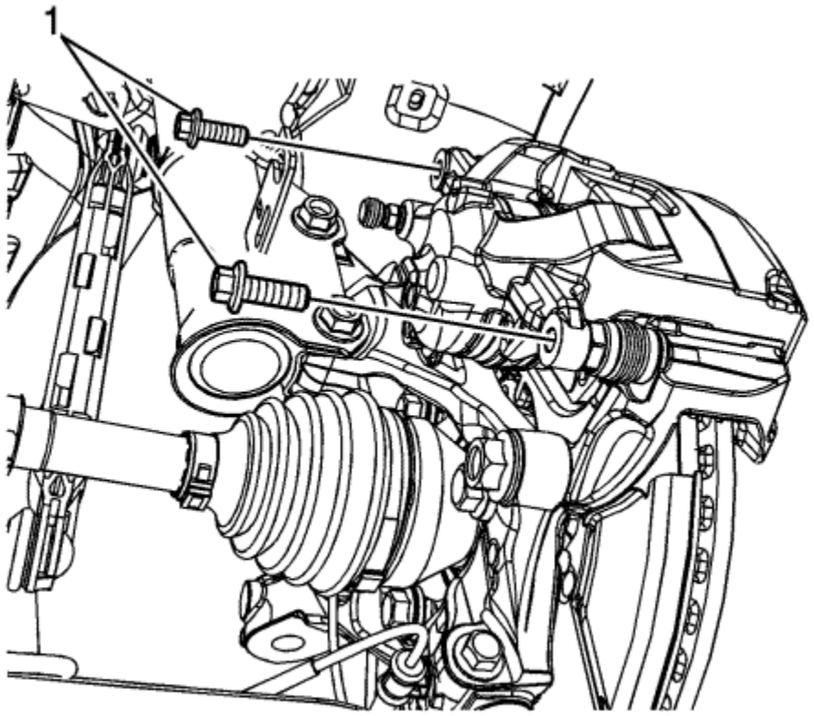

Note: Do not reuse the brake calliper bracket bolts.

7. Install 2 new brake calliper bracket bolts (1).
   7.1. Tighten the bolts a first pass to **100 N·m (74 lb ft)**.
   7.2. Tighten the bolts a second pass an additional **60 degrees**.
   7.3. Tighten the bolts a final pass an additional **15 degrees**.
8. Install the tyre and wheel assembly. Refer to Tyre and Wheel Removal and Installation .

&#169© Copyright Chevrolet. All rights reserved

Rear Brake Disc Replacement

Special Tools

- *CH-41013* Disc Resurfacing Kit
- *CH-42450-A* Wheel Hub Resurfacing Kit

For equivalent regional tools, refer to Special Tools .

Removal Procedure

Warning: Refer to Brake Dust Warning in the Preface section.

Danger: Do not use a service jack in locations other than those specified to lift this vehicle. Lifting the vehicle with a jack in those other locations could cause the vehicle to slip off the jack and roll; this could cause injury or death.

1. Raise and support the vehicle. Refer to Lifting and Jacking the Vehicle .
2. Remove the tyre and wheel assembly. Refer to Tyre and Wheel Removal and Installation .

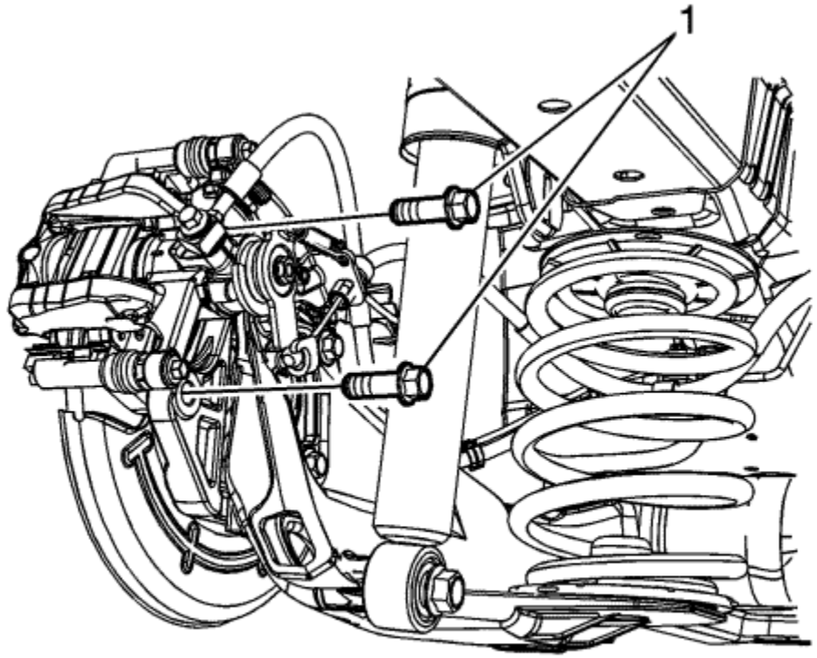

Note: Do not reuse the brake calliper bracket bolts.

3. Remove and discard the brake calliper bracket bolts (1).

   Caution: Support the brake calliper with heavy mechanic wire, or equivalent, whenever it is separated from its mount and the hydraulic flexible brake hose is still connected. Failure to support the calliper in this manner will cause the flexible brake hose to bear the weight of the calliper, which may cause damage to the brake hose and in turn may cause a brake fluid leak.

4. Remove the brake calliper and bracket as an assembly and support with heavy mechanics wire or equivalent.

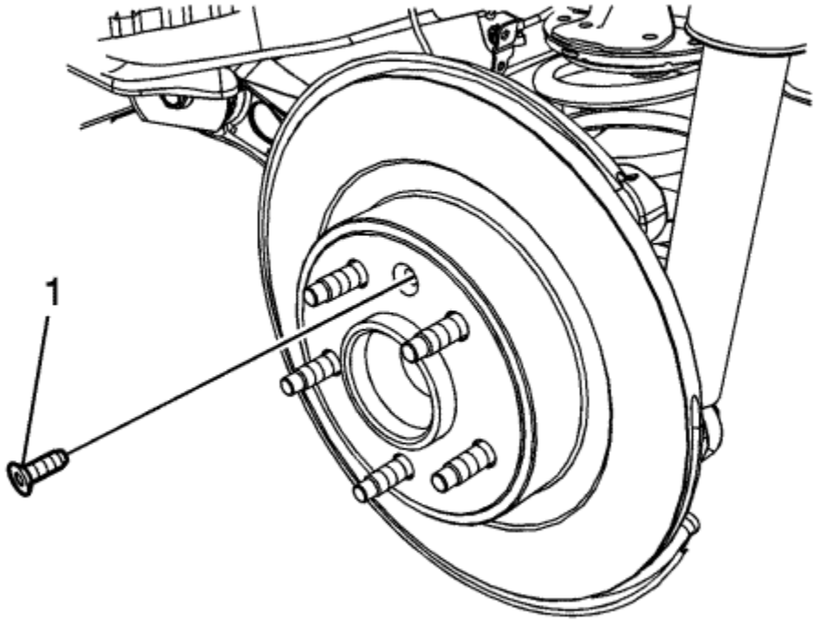

5. Remove the brake disc bolt (1).

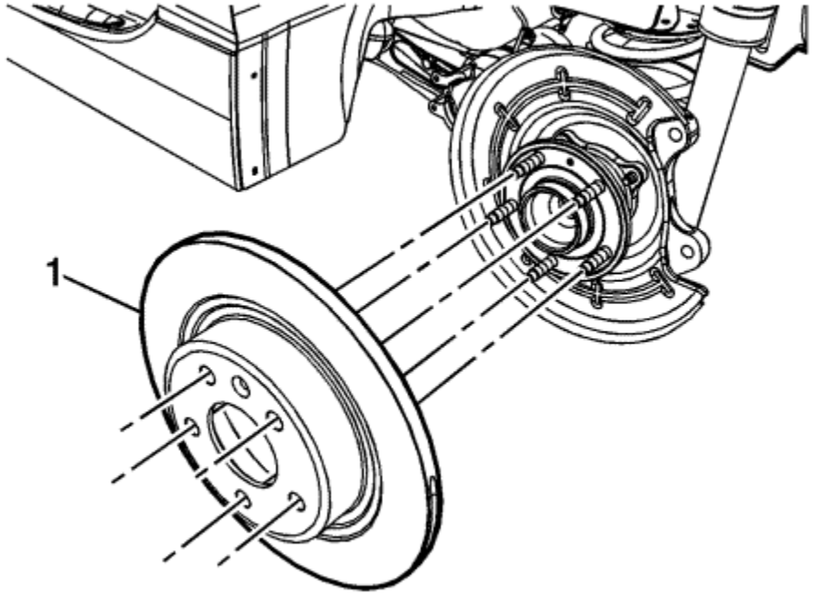

6. Remove the brake disc (1).

Installation Procedure

1. If installing a new brake disc, clean the friction surfaces of the brake disc with denatured alcohol or equivalent.
2. Using the *CH-42450-A* Wheel Hub Resurfacing Kit , thoroughly clean any rust or corrosion from the mating surface of the hub/axle flange.
3. Using the *CH-41013* Disc Resurfacing Kit , thoroughly clean any rust or corrosion from the mating surface of the disc to the hub/axle flange.

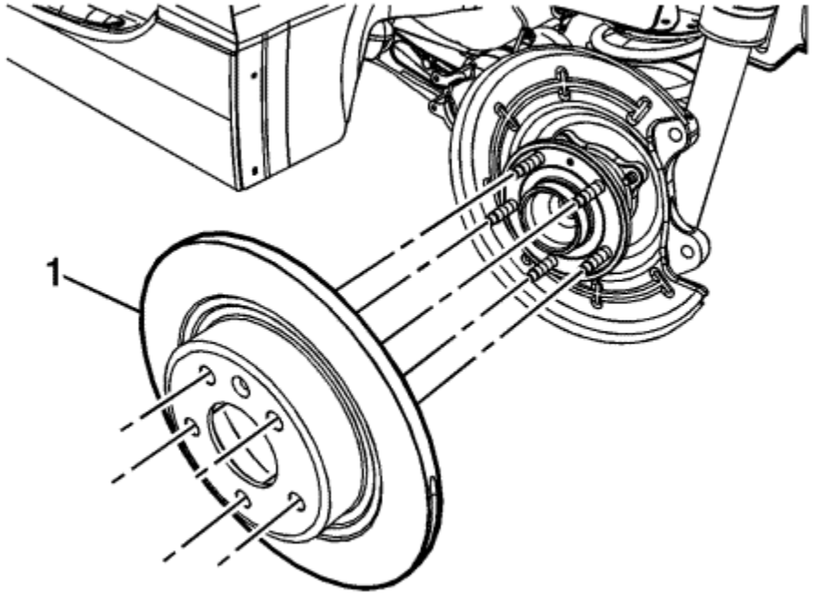

4. Install the brake disc (1).

   Caution: Refer to Fastener Caution in the Preface section.

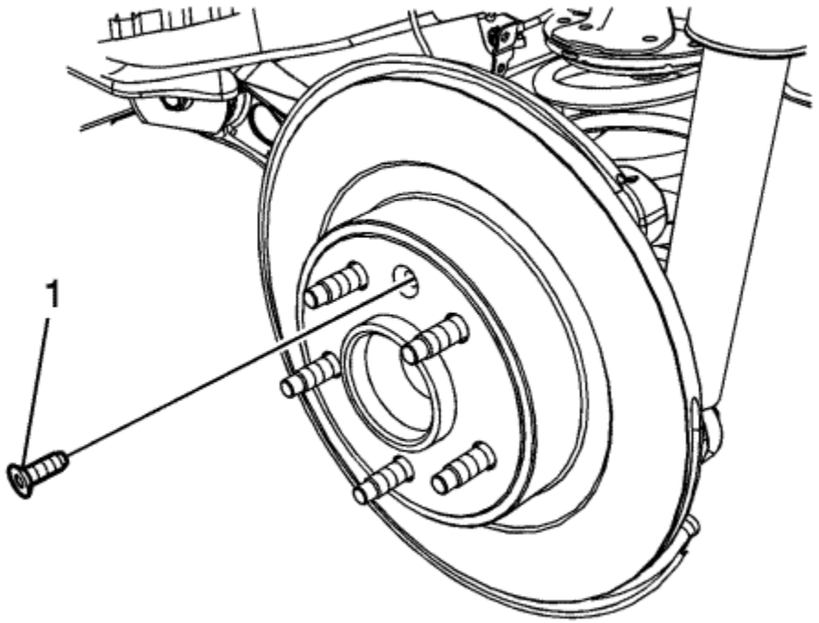

5. Install the brake disc bolt (1) and tighten to **9 N·m (80 lb in)**.
6. Position the brake calliper and bracket assembly over the brake disc and to the suspension knuckle.

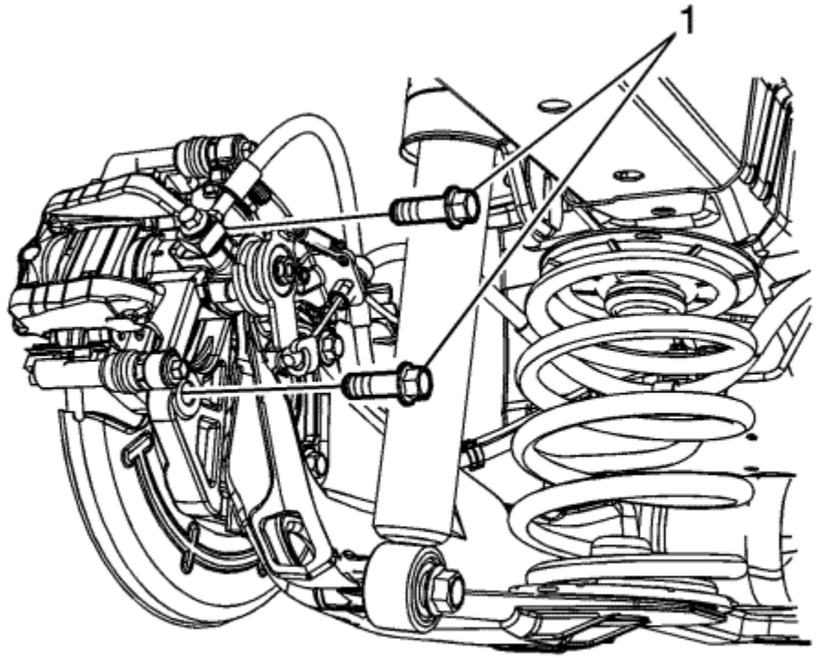

Note: Do not reuse the brake calliper bracket bolts.

7. Instal 2 new brake calliper bracket bolts (1).
   7.1. Tighten the bolts a first pass to **90 N·m (67 lb ft)**.
   7.2. Tighten the bolts a final pass an additional **60 degrees**.
8. Install the tyre and wheel assembly. Refer to Tyre and Wheel Removal and Installation .

&#169© Copyright Chevrolet. All rights reserved

Front Brake Shield Replacement

Removal Procedure

Warning: Refer to Brake Dust Warning in the Preface section.

Danger: Do not use a service jack in locations other than those specified to lift this vehicle. Lifting the vehicle with a jack in those other locations could cause the vehicle to slip off the jack and roll; this could cause injury or death.

1. Raise and support the vehicle. Refer to Lifting and Jacking the Vehicle .
2. Remove the front tyre and wheel assembly. Refer to Tyre and Wheel Removal and Installation .
3. Remove the front wheel bearing and hub assembly. Refer to Front Wheel Bearing and Hub Replacement .

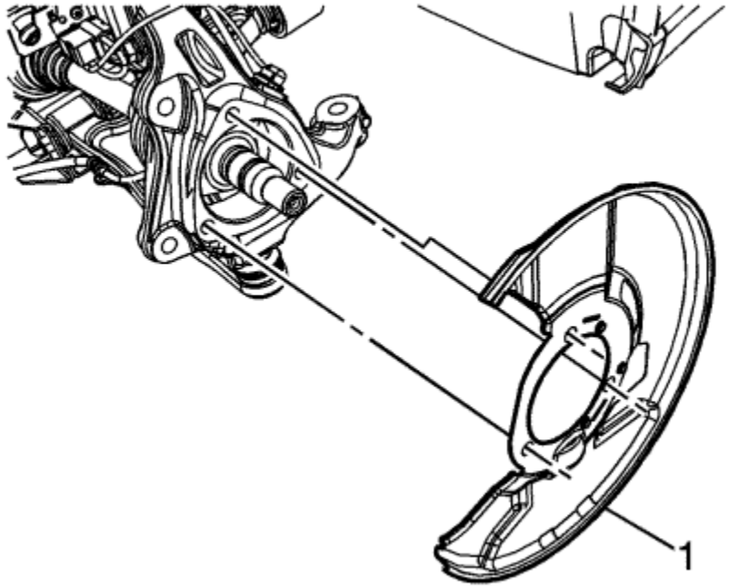

4. Remove the front brake shield (1).

Installation Procedure

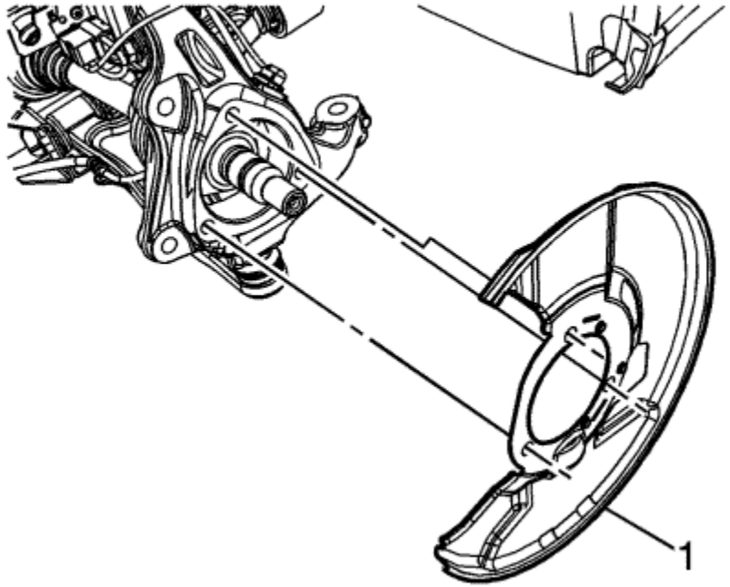

1. Install the front brake shield (1).
2. Install the front wheel bearing and hub assembly. Refer to Front Wheel Bearing and Hub Replacement .
3. Install the tyre and wheel assembly. Refer to Tyre and Wheel Removal and Installation .

© Copyright Chevrolet. All rights reserved

Rear Brake Shield Replacement

Removal Procedure

Danger: Do not use a service jack in locations other than those specified to lift this vehicle. Lifting the vehicle with a jack in those other locations could cause the vehicle to slip off the jack and roll; this could cause injury or death.

1. Raise and support the vehicle. Refer to Lifting and Jacking the Vehicle .
2. Remove the tyre and wheel assembly. Refer to Tyre and Wheel Removal and Installation .

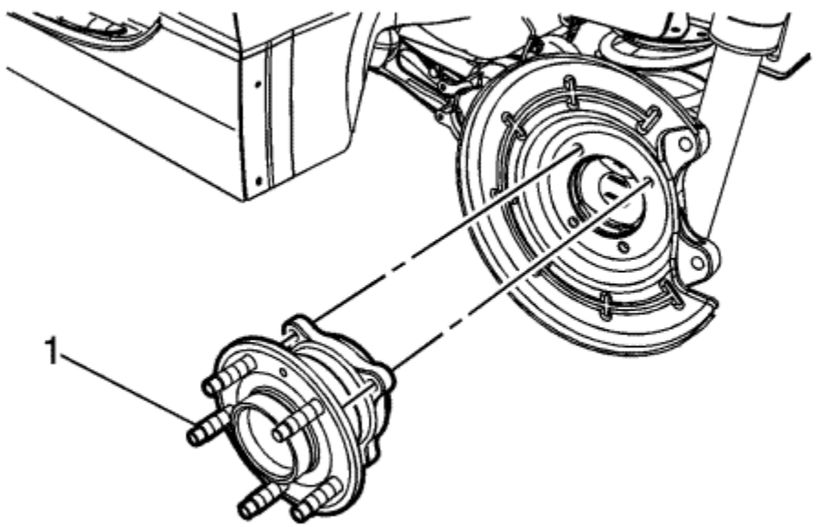

3. Remove the rear wheel bearing and hub assembly (1). Refer to Rear Wheel Bearing and Hub Replacement .

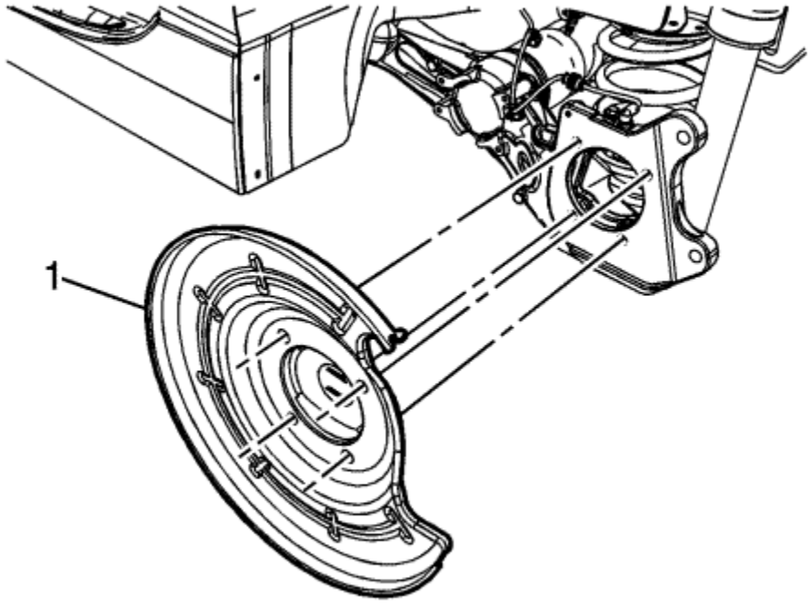

4. Remove the rear brake shield (1).

Installation Procedure

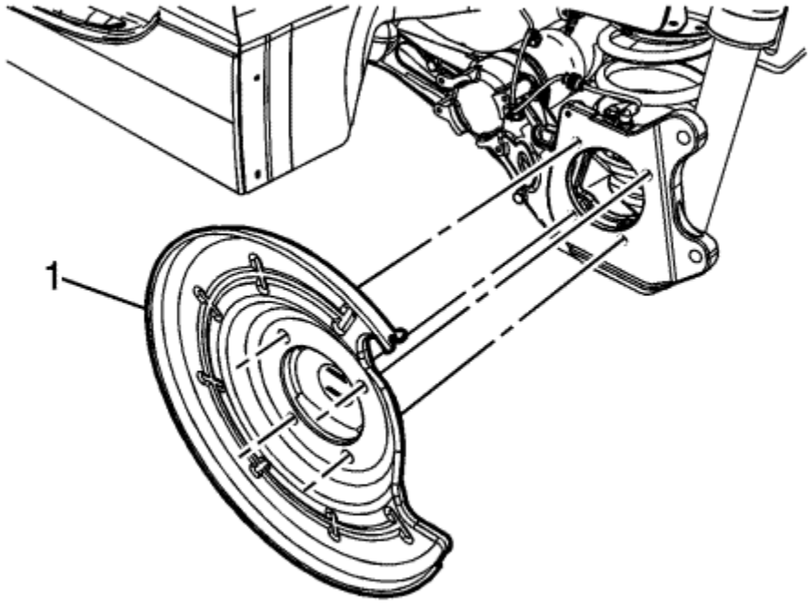

1. Install the rear brake shield (1).

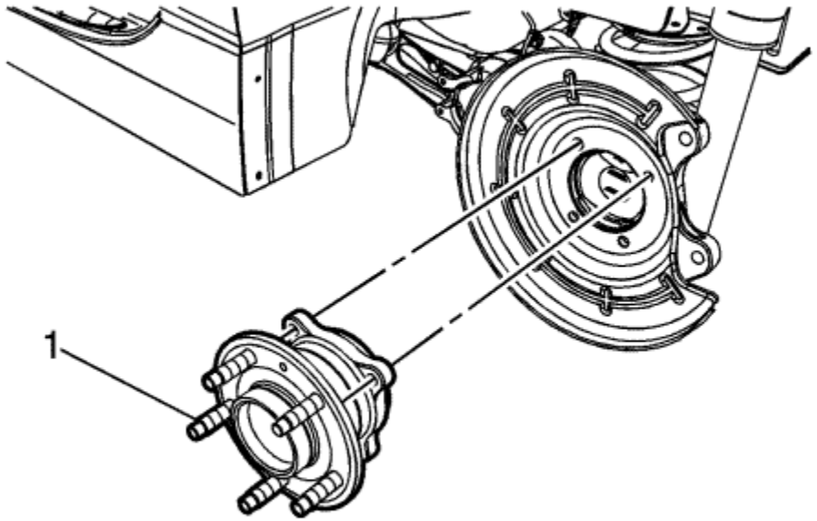

2. Install the rear wheel bearing and hub assembly (1). Refer to Rear Wheel Bearing and Hub Replacement .
3. Install the tyre and wheel assembly. Refer to Tyre and Wheel Removal and Installation .

© Copyright Chevrolet. All rights reserved

Brake Disc Assembled Lateral Runout Correction

Note:

- Brake disc thickness variation MUST be checked BEFORE checking for assembled lateral runout (LRO). Thickness variation exceeding the maximum acceptable level can cause brake pulsation. Refer to Brake Disc Thickness Variation Measurement .
- Brake disc assembled lateral runout (LRO) exceeding the maximum allowable specification can cause thickness variation to develop in the brake disc over time, usually between 4 800-11 300 km (3,000-7,000 mi). Refer to Brake Disc Assembled Lateral Runout Measurement .

Review the following acceptable methods for bringing the brake disc assembled LRO to within specifications. Determine which method to use for the specific vehicle being repaired.

- The indexing method of correcting assembled LRO is most effective when the LRO specification is only exceeded by a relatively small amount: 0.025-0.127 mm (0.001-0.005 in). Indexing is used to achieve the best possible match of high spots to low spots between related components. Refer to Brake Disc Assembled Lateral Runout Correction - Indexing .
- The correction plate method of correcting assembled LRO involves the addition of a tapered plate between the brake disc and the hub/axle flange. The correction plate method can be used to correct LRO that exceeds the specification by up to 0.23 mm (0.009 in). Refer to Brake Disc Assembled Lateral Runout Correction - Correction Plates .
- The on-vehicle brake lathe method is used to bring the LRO to within specifications through compensating for LRO while refinishing the brake disc. Refer to Brake Disc Assembled Lateral Runout Correction - On Vehicle Lathe .

If the assembled LRO cannot be corrected using these methods, then other components must be suspected as causing and/or contributing to the LRO concern.

&#169© Copyright Chevrolet. All rights reserved

Brake Disc Assembled Lateral Runout Correction -- Indexing

Special Tools

CH-45101-100 Conical Brake Disc Washers

For equivalent regional tools, refer to Special Tools .

Warning: Refer to Brake Dust Warning in the Preface section.

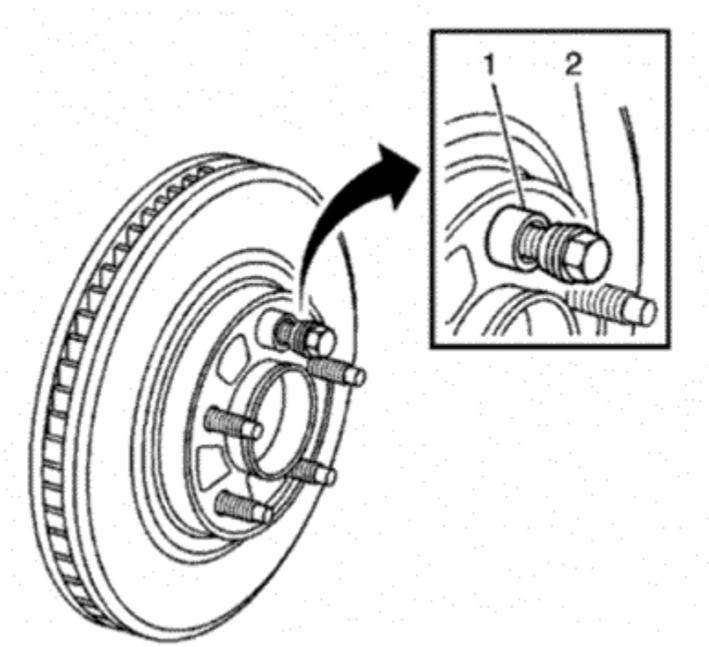

Note:

- Brake disc thickness variation MUST be checked BEFORE checking for assembled lateral runout (LRO). Thickness variation exceeding the maximum acceptable level can cause brake pulsation. Refer to Brake Disc Thickness Variation Measurement .
- Brake disc assembled LRO exceeding the maximum allowable specification can cause thickness variation to develop in the brake disc over time, usually between

4,800-11, 300 km (3,000-7,000 mi). Refer to Brake Disc Assembled Lateral Runout Measurement .

1. Remove the *CH-45101-100* Conical Brake Disc Washers and the lug nuts that were installed during the assembled LRO measurement procedure.
2. Inspect the mating surface of the hub/axle flange and the brake disc to ensure that there are no foreign particles or debris remaining.
3. Index the brake disc in a different orientation to the hub/axle flange.
4. Hold the disc firmly in place against the hub/axle flange and install one of the *CH-45101-100* Conical Brake Disc Washers (1) and one lug nut (2) onto the upper-most wheel stud.
5. Continue to hold the disc secure and tighten the wheel nut firmly by hand.

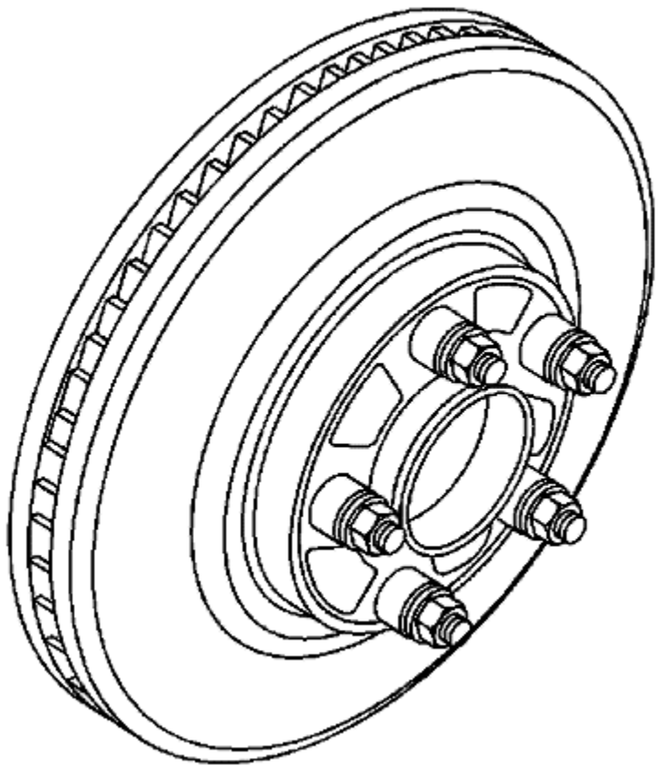

6. Install the remaining *CH-45101-100* Conical Brake Disc Washers and lug nuts onto the wheel studs and tighten the nuts firmly by hand in a star-pattern.
7. Tighten the lug nuts in a star-pattern to specification, in order to properly secure the disc. Refer to Tyre and Wheel Removal and Installation .
8. Measure the assembled LRO of the brake disc. Refer to Brake Disc Assembled Lateral Runout Measurement .
9. Compare the amount of change between this measurement and the original measurement.
10. If this measurement is within specifications, proceed to step 14.
11. If this measurement still exceeds specifications, repeat steps 1-9 until the best assembled LRO measurement is obtained.
12. Matchmark the final location of the disc to the wheel studs if the orientation is different than it was originally.
13. If the brake disc assembled LRO measurement still exceeds the maximum allowable specification, refer to Brake Disc Assembled Lateral Runout Correction .

14. If the brake disc assembled LRO is within specification, install the brake calliper and depress the brake pedal several times to secure the disc in place before removing the *CH-45101-100* Conical Brake Disc Washers and the lug nuts.

&#169© Copyright Chevrolet. All rights reserved

Brake Disc Assembled Lateral Runout Correction -- Correction Plates

Special Tools

CH-45101-100 Conical Brake Disc Washers

For equivalent regional tools, refer to Special Tools .

Warning: Refer to Brake Dust Warning in the Preface section.

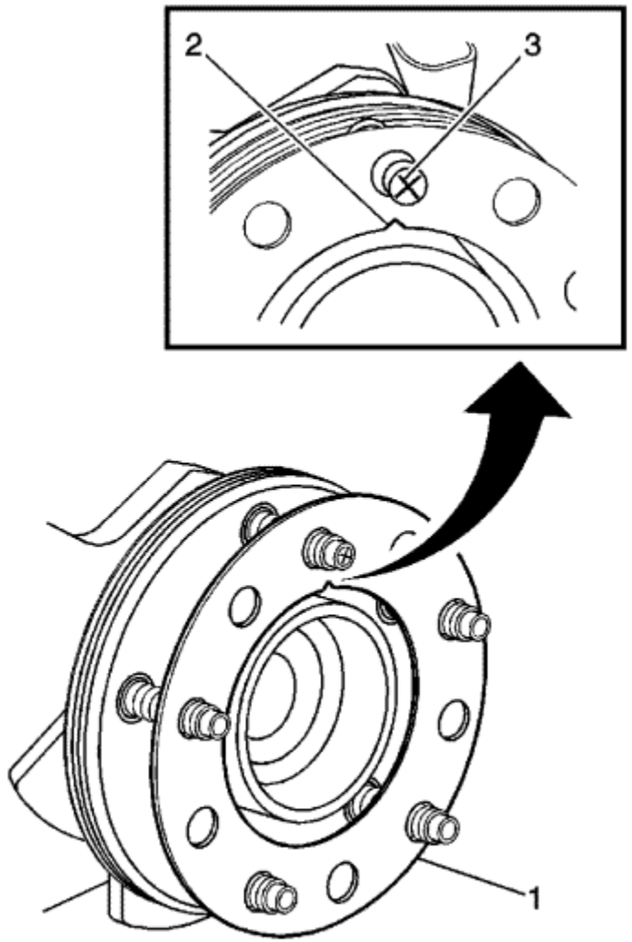

Note:

- Brake disc thickness variation MUST be checked BEFORE checking for assembled lateral runout (LRO). Thickness variation exceeding the maximum acceptable level can cause brake pulsation. Refer to Brake Disc Thickness Variation Measurement .
- Brake disc assembled LRO exceeding the maximum allowable specification can cause thickness variation to develop in the brake disc over time, usually between 4,800-11,300 km (3,000-7,000 mi). Refer to Brake Disc Assembled Lateral Runout Measurement .

1. Rotate the brake disc to position the high spot, identified and marked during the brake disc assembled LRO measurement procedure, to face upward.
2. Remove the *CH-45101-100* Conical Brake Disc Washers and the lug nuts that were installed during the assembled LRO measurement procedure and/or the indexing correction procedure.
3. Inspect the mounting surface of the hub/axle flange and the brake disc to ensure that there are no foreign particles or debris remaining.
4. Select the correction plate, following the manufacturer's instructions, which has a specification closest to the assembled LRO measurement.

For example: If the assembled LRO measurement was 0.076 mm (0.003 in), the 0.076 mm (0.003 in) correction plate would be used. If the measurement was 0.127 mm (0.005 in), the 0.152 mm (0.006 in) correction plate would be used.

5. Determine the positioning for the correction plate (1) using the high spot mark (3) made during the brake disc assembled LRO measurement procedure.

Note:

- Do NOT install used correction plates in an attempt to correct brake disc assembled LRO.
- Do NOT stack up, or install more than one correction plate onto one hub/axle flange location, in an attempt to correct brake disc assembled LRO.

6. Install the correction plate (1) onto the hub/axle flange, with the V-shaped notch (2) orientated to align with the high spot mark (3), that was positioned to face upward.

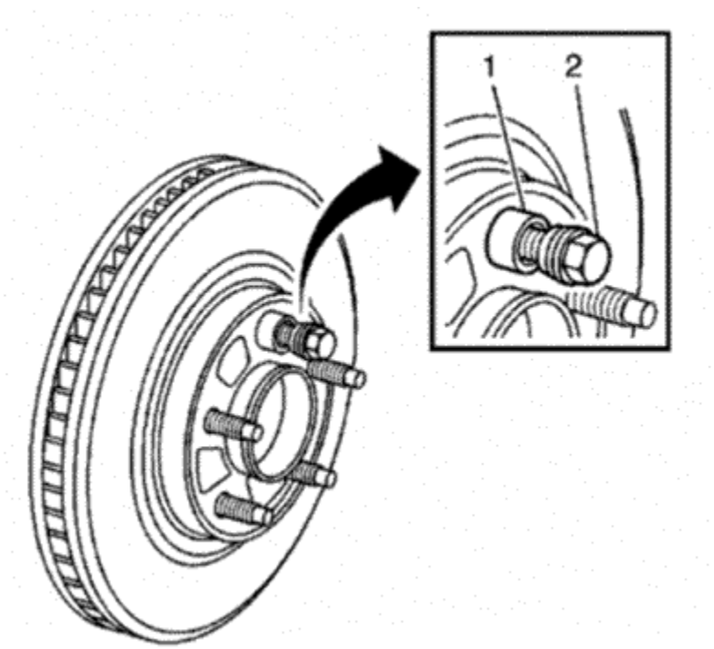

7. Install the brake disc to the hub/axle flange. Use the matchmark made prior to removal for proper orientation to the flange.
8. Hold the disc firmly in place against the hub/axle flange and install one of the *CH-45101-100* Conical Brake Disc Washers (1) and one lug nut (2) onto the upper-most wheel stud.
9. Continue to hold the disc secure and tighten the wheel nut firmly by hand.

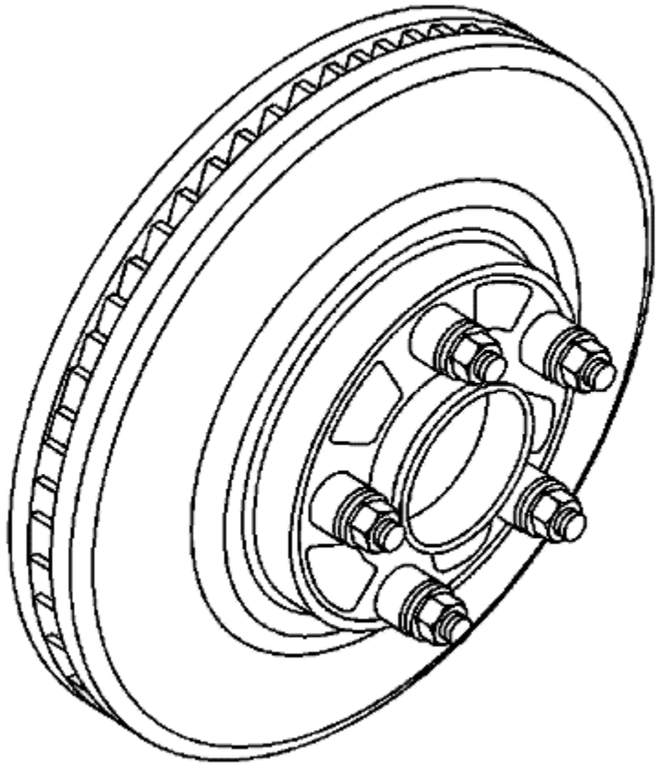

10. Install the remaining *CH-45101-100* Conical Brake Disc Washers and lug nuts onto the wheel studs and tighten the nuts firmly by hand in a star-pattern.
11. Tighten the lug nuts in a star-pattern to specification, in order to properly secure the disc. Refer to Tyre and Wheel Removal and Installation .
12. Measure the assembled LRO of the brake disc. Refer to Brake Disc Assembled Lateral Runout Measurement .
13. If the brake disc assembled LRO measurement still exceeds the maximum allowable specification, refer to Brake Disc Assembled Lateral Runout Correction .
14. If the brake disc assembled LRO measurement is within specification, install the brake calliper and depress the brake pedal several times to secure the disc in place before removing the *CH-45101-100* Conical Brake Disc Washers and the lug nuts.

&#169© Copyright Chevrolet. All rights reserved

Brake Disc Assembled Lateral Runout Correction -- On Vehicle Lathe

Special Tools

CH-45101-100 Conical Brake Disc Washers

For equivalent regional tools, refer to Special Tools .

Warning: Refer to Brake Dust Warning in the Preface section.

Note:

- Brake disc thickness variation MUST be checked BEFORE checking for assembled lateral runout (LRO). Thickness variation exceeding the maximum acceptable level can cause brake pulsation. Refer to Brake Disc Thickness Variation Measurement .
- Brake disc assembled LRO exceeding the maximum allowable specification can cause thickness variation to develop in the brake disc over time, usually between 4 800-11 300 km (3,000-7,000 mi). Refer to Brake Disc Assembled Lateral Runout Measurement .

1. Ensure that the calliper and calliper bracket that are already being supported, are clear from contacting any rotating components, such as the brake disc.
2. Remove the *CH-45101-100* Conical Brake Disc Washers and the lug nuts that were installed during the assembled LRO measurement procedure and/or the indexing correction procedure.
3. Inspect the mounting surface of the hub/axle flange and the brake disc to ensure that there are no foreign particles or debris remaining.
4. Set up the lathe, following the manufacturer's instructions.
5. Refinish the brake disc, following the brake lathe manufacturer's instructions.
6. After each successive cut, inspect the brake disc thickness. Refer to Brake Disc Thickness Measurement .
7. If at any time the brake disc exceeds the minimum allowable thickness after refinish specification, the brake disc must be replaced. After replacing the disc, proceed to step 10.
8. After refinishing the brake disc, use the following procedure in order to obtain the desired non-directional finish:
   8.1. Follow the brake lathe manufacturer's recommended speed setting for applying a non-directional finish.
   8.2. Using moderate pressure, apply the non-directional finish:
      - If the lathe is equipped with a non-directional finishing tool, apply the finish with 120-grit aluminium oxide sandpaper.
      - If the lathe is not equipped with a non-directional finishing tool, apply the finish with a sanding block and 150-grit aluminium oxide sandpaper.
   8.3. After applying a non-directional finish, clean each friction surface of the brake disc with methylated spirit, or an equivalent approved brake cleaner.
9. Remove the lathe from the vehicle.
10. Measure the assembled LRO of the brake disc. Refer to Brake Disc Assembled Lateral Runout Measurement .
11. If the brake disc assembled LRO measurement still exceeds the maximum allowable specification, refer to Brake Disc Assembled Lateral Runout Correction .

12. If the brake disc assembled LRO is within specification, install the brake calliper and depress the brake pedal several times to secure the disc in place before removing the *CH-45101-100* Conical Brake Disc Washers and the lug nuts.

&#169© Copyright Chevrolet. All rights reserved

Brake Disc Refinishing

Special Tools

- *CH-41013* Disc Resurfacing Kit
- *CH-42450-A* Wheel Hub Resurfacing Kit

For equivalent regional tools, refer to Special Tools .

Warning: Refer to Brake Dust Warning in the Preface section.

Note:

- The disc brake discs do not require refinishing as part of routine brake system service. New disc brake discs do not require refinishing.

  Do not refinish disc brake discs in an attempt to correct the following conditions:

  -- Brake system noise - squeal, growl, groan

  -- Uneven and/or premature disc brake pad wear

  -- Superficial or cosmetic corrosion/rust of the disc brake disc friction surface

  -- Scoring of the disc brake disc friction surface less than the maximum allowable specification
- Before refinishing a brake disc, the disc MUST first be checked for adequate thickness to allow the disc to be refinished and remain above the minimum allowable thickness after refinish specification. Refer to Brake Disc Thickness Measurement .

  Disc brake discs should only be refinished if they have adequate thickness to be refinished and if one or more of the following conditions exist:

  -- Thickness variation in excess of the maximum allowable specification

  -- Excessive corrosion/rust and/or pitting

  -- Cracks and/or heat spots

  -- Excessive blueing discolouration

  -- Scoring of the disc brake disc surface in excess of the maximum allowable specification
- Disc brake discs may need to be refinished as part of the process for correcting brake disc assembled lateral runout (LRO) that exceeds the maximum allowable specification.

Note: If the vehicle is equipped with cross-drilled discs, use a lathe with positive rake tooling. This setup requires less cutting pressure, which will result in less vibration, and a better surface finish. Also, use a vibration dampener when cutting. Otherwise, refinish according to the following instructions.

Note: Whenever the brake disc has been separated from the hub/axle flange, clean any rust or contaminants from the hub/axle flange and the brake disc mating surfaces. Failure to do this may result in increased assembled lateral runout (LRO) of the brake disc, which could lead to brake pulsation.

1. Using the *CH-42450-A* Wheel Hub Resurfacing Kit , thoroughly clean any rust or corrosion from the mating surface of the hub/axle flange.
2. Using the *CH-41013* Disc Resurfacing Kit , thoroughly clean any rust or corrosion from the mating surface and mounting surface of the brake disc.
3. Inspect the mating surfaces of the hub/axle flange and the disc to ensure that there are no foreign particles or debris remaining.
4. Mount the brake disc to the brake lathe according to the lathe manufacturer's instructions, ensuring that all mounting attachments and adapters are clean and free of debris.
5. Ensure that any vibration dampening attachments are securely in place.
6. With the brake lathe running, slowly bring in the cutting tools until they just contact the brake disc friction surfaces.
7. Observe the witness mark on the brake disc. If the witness mark extends approximately three-quarters or more of the way around the brake disc friction surface on each side, the brake disc is properly mounted to the lathe.
8. If the witness mark does not extend three-quarters or more of the way around the brake disc, re-mount the disc to the lathe.
9. Following the brake lathe manufacturer's instructions, refinish the brake disc.
10. After each successive cut, inspect the brake disc thickness. Refer to Brake Disc Thickness Measurement .
11. If at any time the brake disc exceeds the minimum allowable thickness after refinish specification, the brake disc must be replaced.
12. After refinishing the brake disc, use the following procedure in order to obtain the desired non-directional finish:
    12.1. Follow the brake lathe manufacturer's recommended speed setting for applying a non-directional finish.
    12.2. Using moderate pressure, apply the non-directional finish:
        - If the lathe is equipped with a non-directional finishing tool, apply the finish with 120-grit aluminium oxide sandpaper.
        - If the lathe is not equipped with a non-directional finishing tool, apply the finish with a sanding block and 150-grit aluminium oxide sandpaper.
    12.3. After applying a non-directional finish, clean each friction surface of the brake disc with methylated spirit, or an equivalent approved brake cleaner and wipe each friction surface using a clean workshop towel to remove metal particles remaining from machining. Repeat the cleaning process if necessary to remove all metal particles.
13. Remove the brake disc from the brake lathe.
14. Measure the assembled LRO of the brake disc to ensure optimum performance of the disc brakes. Refer to Brake Disc Assembled Lateral Runout Measurement .
15. If the brake disc assembled LRO measurement exceeds the specification, bring the LRO to within specifications. Refer to Brake Disc Assembled Lateral Runout Correction .

&#169© Copyright Chevrolet. All rights reserved

Disc Brake System Description and Operation

System Component Description

The disc brake system consists of the following components:

Disc Brake Pads: Applies mechanical output force from the hydraulic brake callipers to friction surfaces of brake discs.

Disc Brake Discs: Uses mechanical output force applied to friction surfaces from the disc brake pads to slow speed of tyre and wheel assembly rotation.

Disc Brake Pad Hardware: Secures disc brake pads firmly in proper relationship to the hydraulic brake callipers; enables a sliding motion of brake pads when mechanical output force is applied.

Disc Brake Calliper Hardware: Provides mounting for hydraulic brake calliper and secures the calliper firmly in proper relationship to calliper bracket. Enables a sliding motion of the brake calliper to the brake pads when mechanical output force is applied.

System Operation

Mechanical output force is applied from the hydraulic brake calliper pistons to the inner brake pads. As the pistons press the inner brake pads outward, the calliper housings draw the outer brake pads inward. This allows the output force to be equally distributed. The brake pads apply the output force to the friction surfaces on both sides of the brake discs, which slows the rotation of the tyre and wheel assemblies. The correct function of both the brake pad and brake calliper hardware is essential for even distribution of braking force.

© Copyright Chevrolet. All rights reserved

Special Tools

Illustration	Tool Number/ Description
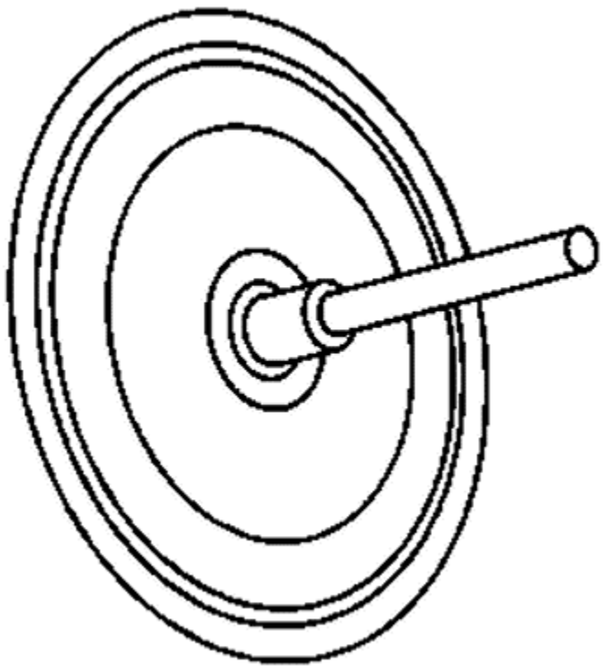	CH 41013 J 41013 Disc Resurfacing Kit
	CH 42450-A J 42450-A

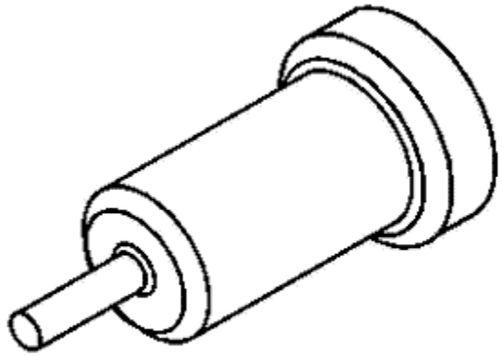	Wheel Hub Resurfacing Kit
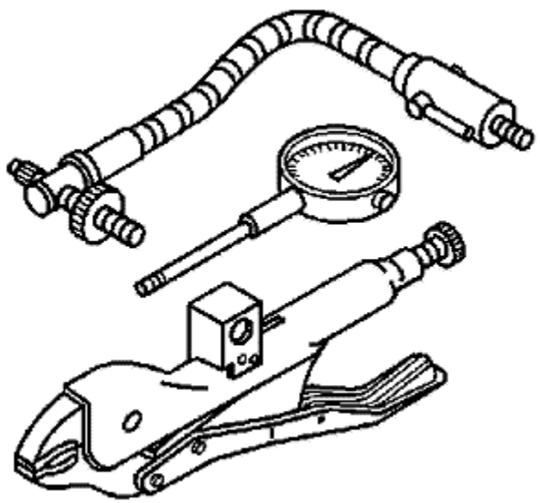	CH 45101 J 45101 Hub and Wheel Runout Gauge
	CH 45101-100

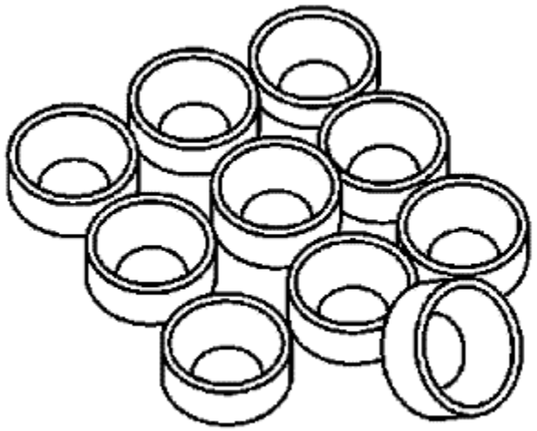	J 45101-100 Conical Brake Disc Washers

© Copyright Chevrolet. All rights reserved

Fastener Tightening Specifications

Application	Specification	
	Metric	English
Brake Hose Bracket Bolt	9 N·m	80 lb in
Brake Hose Fitting Bolt - Front and Rear	40 N·m	30 lb ft
Brake Pedal Assembly Bolt	12 N·m	106 lb in
Brake Pedal Assembly Nut	23 N·m	17 lb ft
Brake Pipe Fitting	23 N·m	17 lb ft
Master Cylinder Nut	22 N·m	16 lb ft
Master Cylinder Reservoir Bolt	8 N·m	71 lb in
Power Brake Booster Pump High Pressure Accumulator (HPA)	30 N·m	22 lb ft

© Copyright Chevrolet. All rights reserved

Brake Component Specifications

Application	Specification	
	Metric	English
Brake Calliper Bleeder Bolt - Front and Rear	17 N·m	13 lb ft

© Copyright Chevrolet. All rights reserved

Brake System Specifications

Application	Specification	
	Metric	English
Maximum Brake Master Cylinder (BMC) Primary Piston Travel*	18 mm	0.71 in
*Measured at a brake pedal apply force (with the power button ON and the brake cool) of 5000 kPa (725 psi).		

© Copyright Chevrolet. All rights reserved

Adhesives, Fluids, Lubricants, and Sealers

Application	Type of Material	GM Part Number
Hydraulic Brake System	DOT 3 Brake Fluid	Refer to the Electronic Parts Catalogue

© Copyright Chevrolet. All rights reserved

Hydraulic Brake Schematics

Hydraulic Brakes

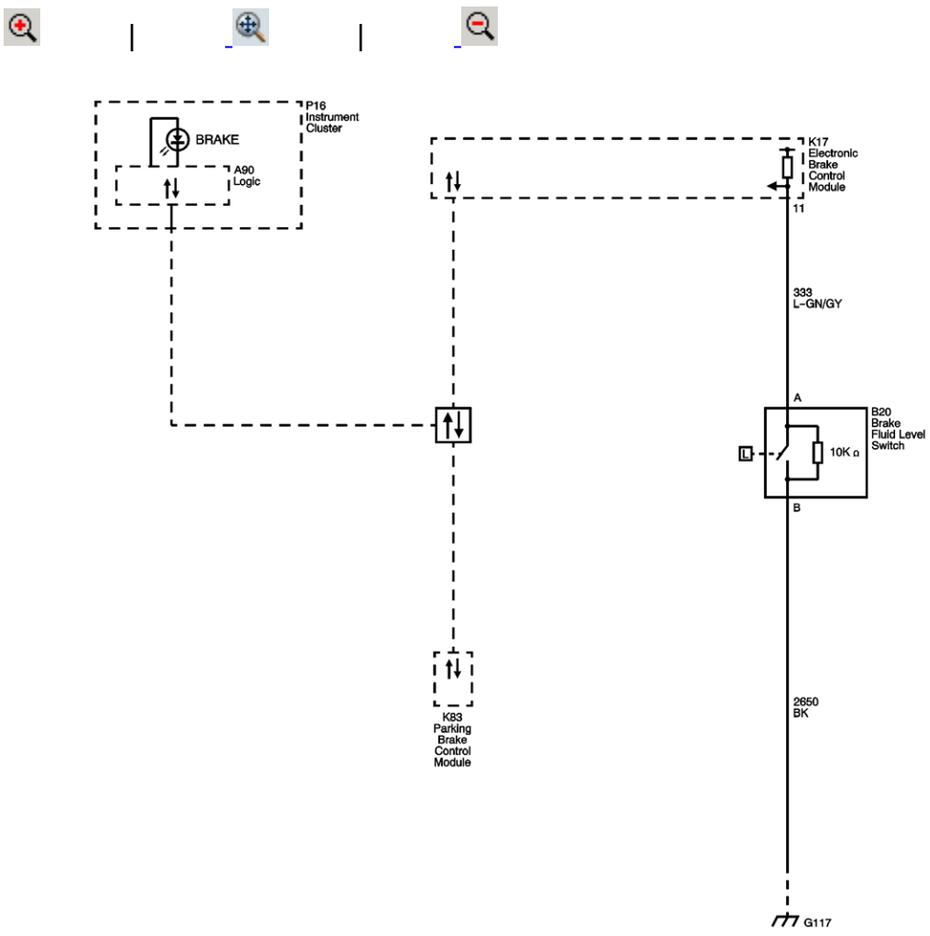

Master Electrical Component List

Brake System, Hydraulic, Assist, and Control Description and Operation

Data Communication Schematics

G106, G109, G110, G112, G113 and G117

© Copyright Chevrolet. All rights reserved

DTC C0267

Diagnostic Instructions

- Perform the Diagnostic System Check - Vehicle prior to using this diagnostic procedure.
- Review Strategy Based Diagnosis for an overview of the diagnostic approach.
- Diagnostic Procedure Instructions provides an overview of each diagnostic category.

DTC Descriptor

DTC C0267 00: Low Brake Fluid Indicated

Diagnostic Fault Information

Circuit	Short to Ground	Open/High Resistance	Short to Voltage	Signal Performance
Signal	C0267 00	C0267 00	1	--
Ground	--	C0267 00	--	--
1. Brake Warning Indicator Malfunction				

Circuit/System Description

The brake fluid level switch monitors the level of brake fluid in the brake fluid reservoir.

Conditions for Running the DTC

Vehicle in Service Mode.

Conditions for Setting the DTC

- A short to ground detected on the brake fluid level signal circuit for 60 seconds.
- Low brake fluid level is detected for 60 seconds.

Action Taken When the DTC Sets

One or more of the following actions may occur:

- The vehicle stability enhancement system (VSES) and traction control system (TCS) is disabled.
- A DIC message and/or a warning indicator may be displayed.

Conditions for Clearing the DTC

The condition for setting the DTC is no longer present.

Reference Information

Schematic Reference

Hydraulic Brake Schematics

Connector End View Reference

Component Connector End Views

Description and Operation

Brake Warning System Description and Operation

Electrical Information Reference

- Circuit Testing
- Connector Repairs
- Testing for Intermittent Conditions and Poor Connections
- Wiring Repairs

Scan Tool Reference

Control Module References for scan tool information

Circuit/System Verification

1. Inspect for proper brake fluid level. The fluid level should be above the minimum level.

If low, refer to Brake Fluid Loss .

2. Vehicle in Service Mode, observe the scan tool Brake Fluid Level Sensor parameter. The reading should be OK.

Circuit/System Testing

1. Vehicle OFF, disconnect the harness connector at the B20 brake fluid level switch.
2. Test for less than 10 Ω between the ground circuit terminal B and ground.
   If greater than the specified range, test the ground circuit for an open/high resistance.
3. Vehicle in Service Mode, test for 12.0-12.8 V between the sensor signal circuit terminal A and ground.
   If outside specified range, test the signal circuit terminal A for a short to ground.

   Note: The parameter may take up to 60 seconds to switch from OK to Low.

4. Install a 3 A fused jumper wire between the signal circuit terminal A and ground circuit terminal B. Verify the scan tool Brake Fluid Level Sensor parameter is Low.
   If not the specified value, test the signal circuit for an open/high resistance. If the circuit tests normal, replace the K17 electronic brake control module (EBCM).
5. If all circuits test normal, test or replace the B20 brake fluid level switch.

Component Testing

1. Vehicle OFF, disconnect the harness connector at the B20 brake fluid level switch.
2. Test for 9.5-10.5 KΩ between the ground circuit terminal B and the signal circuit terminal A with the switch in the open position.
   If outside the specified range, replace the B20 brake fluid level switch.
3. Test for less than 5 Ω between the signal terminal A and ground terminal B with the switch in the closed position.
   If greater than the specified range, replace the brake fluid level switch.

Repair Instructions

Perform the Diagnostic Repair Verification after completing the diagnostic procedure.

- Master Cylinder Reservoir Replacement
- Control Module References for EBCM replacement, programming and setup

&#169© Copyright Chevrolet. All rights reserved

Symptoms - Hydraulic Brakes

Important: The following steps must be completed before using the symptom tables.

1. Perform the Brake System Vehicle Road Test before using the hydraulic brake symptom tables in order to duplicate the customer's concern.
2. Review the system operation in order to familiarise yourself with the system functions. Refer to the following:
   - Hydraulic Brake System Description and Operation
   - Brake System, Hydraulic, Assist, and Control Description and Operation
   - Hydraulic Brake Component Operation Visual Inspection

Visual/Physical Inspection

- Inspect for aftermarket devices which could affect the operation of the Hydraulic Brake System. Refer to Checking Aftermarket Accessories .
- Inspect the easily accessible or visible system components for obvious damage or conditions which could cause the symptom.

Intermittent

Faulty electrical connections or wiring may be the cause of intermittent conditions. Refer to Testing for Intermittent Conditions and Poor Connections .

Symptom List

Refer to a symptom diagnostic procedure from the following list in order to diagnose the symptom:

- Brake Pulsation
- Brake System Noise
- Braking Action Uneven - Pulls to One Side
- Braking Action Uneven - Front to Rear
- Brake Pedal Excessive Travel
- Brake Pedal Excessive Effort
- Brakes Drag
- Brake System Slow Release
- Brake Fluid Loss
- Brake Hydraulic and Assist System Diagnosis

&#169© Copyright Chevrolet. All rights reserved

Brake Warning Indicator Malfunction

Diagnostic Instructions

- Perform the Diagnostic System Check - Vehicle prior to using this diagnostic procedure.
- Review Strategy Based Diagnosis for an overview of the diagnostic approach.
- Diagnostic Procedure Instructions provides an overview of each diagnostic category.

Diagnostic Fault Information

Circuit	Short to Ground	Open/High Resistance	Short to Voltage	Signal Performance
Brake Fluid Level Signal	C0267 00	1	--	--
Ground	--	1	--	--
1. Brake Warning Indicator Malfunction				

Circuit/System Description

The brake fluid level switch monitors the level of brake fluid in the master cylinder. When the electronic brake control module (EBCM) sees the brake fluid level switch input grounded, it sends a serial data message to the instrument panel cluster to turn ON the Red Brake Warning indicator.

Reference Information

Schematic Reference

Hydraulic Brake Schematics

Connector End View Reference

Component Connector End Views

Description and Operation

Brake Warning System Description and Operation

Electrical Information Reference

- Circuit Testing
- Connector Repairs
- Testing for Intermittent Conditions and Poor Connections
- Wiring Repairs

Scan Tool Reference

Control Module References for scan tool information

Circuit/System Verification

1. Verify the brake fluid is at or above the minimum level.
   If low, refer to Brake Fluid Loss .
2. Command the instrument panel cluster lamp test with a scan tool, the warning indicator should turn ON.
   If the red brake warning indicator does not illuminate, replace the P16 Instrument Cluster.
3. Vehicle in Service Mode, observe the scan tool Brake Fluid Level Sensor parameter. The reading should be OK.

Circuit/System Testing

1. Vehicle OFF, disconnect the harness connector at the B20 Brake Fluid Level Switch.
2. Test for less than 5 Ω between the ground circuit terminal B and ground.
   If greater than the specified range, test the ground circuit for an open/high resistance.
3. Vehicle in Service Mode, verify the scan tool Brake Fluid Level Sensor parameter is OK.
   If not the specified value, test the signal circuit terminal A for a short to ground. If the circuit tests normal, replace the K17 Electronic Brake Control Module.

   Note: The parameter may take up to 60 seconds to switch from OK to Low.

4. Install a 3 A fused jumper wire between the signal circuit terminal A and ground circuit terminal B. Verify the scan tool Brake Fluid Level Sensor parameter is Low.
   If not the specified value, test the signal circuit for an open/high resistance. If the circuit tests normal, replace the K17 Electronic Brake Control Module.
5. If all circuits test normal, test or replace the B20 Brake Fluid Level Switch.

Component Testing

Static Test

1. Vehicle OFF, disconnect the harness connector at the B20 Brake Fluid Level Switch.
2. Test for infinite resistance between the ground terminal B and the signal terminal A with the switch in the open position.
   If less than the specified value, replace the B20 Brake Fluid Level Switch.
3. Test for less than 5 Ω between the signal terminal A and ground terminal B with the switch in the closed position.
   If greater than the specified range, replace the B20 Brake Fluid Level Switch.

Repair Instructions

Perform the Diagnostic Repair Verification after completing the diagnostic procedure.

- Master Cylinder Reservoir Replacement
- Control Module References for instrument panel cluster, and control module replacement, programming and setup

&#169© Copyright Chevrolet. All rights reserved

Brake Pulsation

Step	Action	Yes	No
DEFINITION: • Fluctuation or pulsation is felt through the brake pedal, steering wheel, seat, floor, and/or in the vehicle ONLY when braking. • Notchy or uneven brake pedal feel during brake apply. • Kickback is felt through the brake pedal during brake apply and release.			
1	Were you sent here from the Hydraulic Brake Symptom table?	Go to Step 2	Go to Symptoms - Hydraulic Brakes
2	1. Inspect the disc brake system for the following conditions: • Excessive thickness variation of disc friction surfaces • Excessive assembled lateral runout (LRO) of disc friction surfaces • Hard spots, heat checks, bluing discoloration of disc friction surfaces; possibly due to brake drag • Excessive corrosion of disc friction surfaces; including red, gray or black oxidation • Loose, damaged or missing calliper or lining hardware • Bent or damaged calliper or mounting component • Excessive LRO of wheel hub/axle flange; due to damage and/or loose or excessively worn bearings 2. Perform the disc brake system diagnostic procedure. Refer to Disc Brake System Diagnosis . 3. Adjust, repair or replace components as necessary. Did you find and correct a condition?	Go to Step 8	Go to Step 3
3	1. Inspect the brake hydraulic and assist systems for the following conditions: • Lack of lubrication, binding, excessively worn and/or damaged brake pedal pushrod, pin and/or pedal pivot bushings. • Bent or damaged pedal pushrod, pedal, or pedal bracket. • Restricted brake master cylinder reservoir-to-brake pressure modulator valve (BPMV) feed and/or return hoses. 2. Perform the entire brake and hydraulic assist system diagnostic procedure. Refer to Brake Hydraulic and Assist System Diagnosis . 3. Adjust, repair or replace components as necessary. Did you find and correct a condition?	Go to Step 8	Go to Step 4

4	Does the brake pedal feel notchy or uneven during brake apply?	Go to Step 6	Go to Step 5
5	Is kickback felt through the brake pedal during brake apply and release?	Go to Step 7	Go to Symptoms - Hydraulic Brakes
6	1. Replace the brake master cylinder for sticking or improperly functioning pistons. Refer to Master Cylinder Replacement . 2. Pressure bleed the hydraulic brake system. Refer to Hydraulic Brake System Bleeding : Pressure . 3. Perform the entire Antilock Brake System Automated Bleed . Did you find and correct a condition?	Go to Step 8	Go to Symptoms - Hydraulic Brakes
7	1. Replace the brake pressure modulator valve (BPMV) for an improperly functioning boost circuit. Refer to Electronic Brake Control Module with Brake Pressure Modulator Valve Replacement . 2. Pressure bleed the hydraulic brake system. Refer to Hydraulic Brake System Bleeding : Pressure . 3. Perform the entire Antilock Brake System Automated Bleed . Did you find and correct a condition?	Go to Step 8	Go to Symptoms - Hydraulic Brakes
8	1. Install or connect components that were removed or disconnected during diagnosis. 2. Road test the vehicle in order to confirm proper operation. Refer to Brake System Vehicle Road Test . Is the condition still present?	Go to Step 2	System OK

&#169© Copyright Chevrolet. All rights reserved

Brake System Noise

Step	Action	Yes	No
DEFINITION: Vehicle exhibits abnormal noise when braking; vehicle may exhibit abnormal noise during motion just after brake pedal release.			
1	Were you sent here from the Hydraulic Brake Symptom table?	Go to Step 2	Go to Diagnostic Starting Point - Vehicle
2	1. Inspect the disc brake system for the following conditions. • Lining wear indicator contact with disc • Debris trapped between disc and splash shield or backing plate; and/or debris trapped between disc and linings • Contaminated linings • Aftermarket linings • Glazed linings • Distorted, cracked or damaged linings • Excessively worn linings • Damaged or excessively worn calliper hardware and/or lining hardware • Incorrectly installed, loose or missing calliper hardware and/or lining hardware • Lack of lubrication or excessive corrosion on metal to metal contact surfaces • Bent or damaged splash shield or backing plate • Hard spots, heat checks, blueing discolouration of disc friction surfaces • Glazed disc friction surfaces • Bent or damaged calliper or mounting component 2. Adjust, repair or replace components as necessary. Refer to Disc Brake System Diagnosis . Did you find and correct a condition?	Go to Step 6	Go to Step 3
3	1. Inspect the brake apply system for the following conditions. • Lack of lubrication or excessively worn pushrod or pedal pivots or pivot bushes • Bent or damaged pedal pushrod, pedal, or pedal bracket 2. Adjust, repair or replace components as necessary. Refer to Brake Hydraulic and Assist System Diagnosis .		

	Did you find and correct a condition?	Go to Step 6	Go to Step 4
4	1. Inspect the hydraulic brake system for the following conditions. • Improper operation of calliper pistons • Contaminated brake fluid 2. Adjust, repair or replace components as necessary. Refer to Brake Hydraulic and Assist System Diagnosis . Did you find and correct a condition?	Go to Step 6	Go to Step 5
5	Inspect the hand brake system for proper operation. Refer to Hand brake System Diagnosis . Did you find and correct a condition?	Go to Step 6	Go to Diagnostic Starting Point - Vehicle
6	1. Install or connect components that were removed or disconnected during diagnosis. 2. Road test the vehicle in order to confirm proper operation. Refer to Brake System Vehicle Road Test . Is the condition still present?	Go to Step 2	System OK

&#169© Copyright Chevrolet. All rights reserved

Braking Action Uneven -- Pulls to One Side

Test Description

The numbers below refer to the step numbers on the diagnostic table.

4. Suspension components that are not operating properly may cause a disturbance to the vehicle during application of the brake system.
5. Steering components that are not operating properly may cause a disturbance to the vehicle during application of the brake system.

Step	Action	Yes	No
DEFINITION: Vehicle pulls to one side only when braking.			
1	Were you sent here from the Hydraulic Brake Symptom table?	Go to Step 2	Go to Symptoms - Hydraulic Brakes
2	1. Inspect the brake hydraulic and assist systems for the following conditions: • Kinked, pinched or damaged brake pipe or flexible brake hose • Sticking or improperly operating calliper piston • Brake fluid leak 2. Perform the entire brake and hydraulic assist system diagnostic procedure. Refer to Brake Hydraulic and Assist System Diagnosis . 3. Adjust, repair or replace components as necessary. Did you find and correct a condition?	Go to Step 7	Go to Step 3
3	1. Inspect the disc brake system for the following conditions. • Contaminated linings • Glazed linings • Distorted, cracked or damaged linings on one side • Loose, damaged or missing calliper hardware and/or lining hardware • Incorrect linings on one side • Hard spots, heat checks, blueing discolouration of disc friction surfaces; possibly due to brake drag • Glazed disc friction surfaces		

	• Bent or damaged calliper or mounting component 2. Perform the disc brake system diagnostic procedure. Refer to Disc Brake System Diagnosis . 3. Adjust, repair or replace components as necessary. Did you find and correct a condition?	Go to Step 7	Go to Step 4
4	1. Inspect the suspension system for the following conditions. • Incorrect tyre pressures • Loose suspension component connections • Excessively worn or damaged suspension components 2. Adjust, repair or replace components as necessary. Did you find and correct a condition?	Go to Step 7	Go to Step 5
5	1. Inspect the steering system for the following conditions. • Loose steering component connections • Excessively worn or damaged steering components 2. Adjust, repair or replace components as necessary. Did you find and correct a condition?	Go to Step 7	Go to Step 6
6	1. Replace the brake master cylinder for an improperly functioning secondary circuit. Refer to Master Cylinder Replacement . 2. Pressure bleed the hydraulic brake system. Refer to Hydraulic Brake System Bleeding : Pressure . 3. Perform the entire Antilock Brake System Automated Bleed . Did you find and correct a condition?	Go to Step 7	Go to Symptoms - Hydraulic Brakes
7	1. Install or connect components that were removed or disconnected during diagnosis. 2. Road test the vehicle in order to confirm proper operation. Refer to Brake System Vehicle Road Test . Is the condition still present?	Go to Step 2	System OK

&#169© Copyright Chevrolet. All rights reserved

Braking Action Uneven -- Front to Rear

Test Descriptions

The number below refers to the step number on the diagnostic table.

4. Suspension components that are not operating properly may cause a disturbance to the vehicle during application of the brake system.

Step	Action	Yes	No
DEFINITION: Braking action or stopping force sensitive or grabbing and/or more pronounced at the front or at the rear axle. Sensitive or grabbing brakes: Excessive brake jump-in force relative to brake pedal input.			
1	Were you sent here from the Hydraulic Brake Symptom table?	Go to Step 2	Go to Diagnostic Starting Point - Vehicle
2	1. Inspect the hydraulic brake system for the following conditions: • Improper operation of calliper pistons • Kinked, pinched or damaged brake pipe or flexible brake hose • Brake fluid leak • Improperly functioning proportion valve, if equipped • Improper operation of dynamic rear proportion (DRP) system, if equipped 2. Adjust, repair or replace components as necessary. Refer to Brake Hydraulic and Assist System Diagnosis . Did you find and correct a condition?	Go to Step 6	Go to Step 3
3	1. Inspect the disc brake system for the following conditions: • Contaminated linings • Glazed linings • Distorted, cracked or damaged linings • Excessively worn linings • Aftermarket linings • Damaged or excessively worn calliper hardware and/or lining hardware • Hard spots, heat checks, blueing discolouration of disc friction surfaces		

	• Glazed disc friction surfaces 2. Adjust, repair or replace components as necessary. Refer to Disc Brake System Diagnosis . Did you find and correct a condition?	Go to Step 6	Go to Step 4
4	1. Inspect the suspension system for the following conditions: • Loose suspension component connections • Excessively worn or damaged suspension components 2. Adjust, repair or replace components as necessary. Refer to Diagnostic Starting Point - Vehicle . Did you find and correct a condition?	Go to Step 6	Go to Step 5
5	1. Inspect the brake apply system for the following conditions: • Binding, bent or damaged pedal pushrod, pedal, or pedal bracket • Binding, bent or damaged brake pedal • Binding, bent or damaged brake pedal bracket 2. Adjust, repair or replace components as necessary. Refer to Brake Hydraulic and Assist System Diagnosis . Did you find and correct a condition?	Go to Step 6	Go to Diagnostic Starting Point - Vehicle
6	1. Install or connect components that were removed or disconnected during diagnosis. 2. Road test the vehicle in order to confirm proper operation. Refer to Brake System Vehicle Road Test . Is the condition still present?	Go to Step 2	System OK

&#169© Copyright Chevrolet. All rights reserved

Brake Pedal Excessive Travel

Step	Action	Yes	No
DEFINITION: Brake pedal travels further than expected to obtain firm pedal and/or firm pedal cannot be obtained, pedal fades away, or pedal is spongy.			
1	Were you sent here from the Hydraulic Brake Symptom table?	Go to Step 2	Go to Symptoms - Hydraulic Brakes
2	Inspect the travel and feel of brake pedal applies. Perform the following: 1. Ensure the ignition is OFF for at least 60 seconds to depressurise and deplete the power reserve. 2. With the ignition OFF, apply the brake pedal several times to verify the power reserve is fully depleted. 3. With power reserve depleted, apply the brake pedal with light, steady pressure and hold for 15 seconds. Observe pedal travel and feel. 4. Apply the brake pedal with light, steady pressure, then without pumping the pedal, reduce pressure and reapply pressure several times. Observe pedal travel and feel for each apply. 5. Apply the brake pedal slowly, then release and apply the pedal quickly. Observe pedal travel and feel for each apply. Did you complete the brake pedal travel and feel inspections?	Go to Step 3	--
3	1. Inspect the hydraulic brake system for the conditions listed, based on the following symptoms observed during the pedal travel and feel inspections: • Pedal feel was spongy - Air in hydraulic system - External brake fluid leaks - Soft, weak or damaged hydraulic hoses; expanding under pressure • Pedal fell away and/or traveled to or almost to floor - External brake fluid leaks - Poor brake fluid quality; low boiling point - Internal brake fluid leaks; improperly functioning master cylinder • Pedal was somewhat firm then dropped slightly, or pedal rose with successive applies, or pedal travel was different between slow and quick applies - Internal brake fluid leaks; improperly functioning master cylinder - Poor brake fluid quality; low boiling point		

	• Pedal returned to rest slowly after any of the applies - Internally damaged flexible brake hoses; hindering fluid return - Binding calliper pistons - Internal brake fluid leaks; improperly functioning master cylinder 2. Repair or replace components as necessary. Refer to Brake Hydraulic and Assist System Diagnosis . 3. Re-inspect brake pedal apply travel and feel. Did you find and correct a condition?	Go to Step 9	Go to Step 4
4	1. Inspect the disc brake system for the following conditions: • Cracked, excessively worn or damaged linings • Cracked, excessively worn or damaged discs • Improperly operating, binding or damaged calliper hardware and/or lining hardware • Loose or missing calliper hardware and/or lining hardware • Excessive assembled lateral runout (LRO) of disc friction surfaces • Bent or damaged calliper or mounting component 2. Adjust, repair or replace components as necessary. Refer to Disc Brake System Diagnosis . 3. Re-inspect brake pedal apply travel and feel. Did you find and correct a condition?	Go to Step 9	Go to Step 5
5	Inspect for proper brake pedal travel. Refer to Brake Pedal Travel Measurement and Inspection . Is the brake pedal travel distance within the acceptable limits?	Go to Step 8	Go to Step 6
6	1. Inspect for worn, missing, misaligned, bent or damaged brake pedal system components. 2. Inspect the brake pedal bushes for binding, excessive wear and/or damage and inspect the brake pedal for a misaligned, bent, and/or damaged condition. 3. Replace the brake pedal system components that are worn, missing, misaligned, bent or damaged. Did you find and replace any worn, missing, misaligned, bent or damaged brake pedal system components?	Go to Step 9	Go to Step 7
7	1. Replace the brake master cylinder assembly. 2. Inspect the brake pedal travel. Refer to Brake Pedal Travel Measurement and Inspection . Did you find and correct a condition?	Go to Step 9	Go to Step 8
8	1. Inspect the brake assist system for the following conditions: • Internal fluid leaks and/or restrictions within the brake modulator assembly • Damaged or improperly operating brake modulator assembly 2. Adjust, repair or replace components as necessary. Refer to Brake Hydraulic and Assist System Diagnosis .	Go to	Go to Symptoms -

	Did you find and correct a condition?	Step 9	Hydraulic Brakes
9	1. Install or connect components that were removed or disconnected during diagnosis. 2. Road test the vehicle in order to confirm proper operation. Refer to Brake System Vehicle Road Test . Is the condition still present?	Go to Step 2	System OK

&#169© Copyright Chevrolet. All rights reserved

Brake Pedal Excessive Effort

Step	Action	Yes	No
DEFINITION: Brake pedal requires an increased amount of input from the driver to obtain good braking action and/or stopping distance is increased.			
1	Were you sent here from the Hydraulic Brake Symptom table?	Go to Step 2	Go to Diagnostic Starting Point - Vehicle
2	1. Inspect the brake assist system for the following conditions: • Lack of lubrication, binding or excessively worn pushrod or pedal pivots or pivot bushes • Bent or damaged pedal pushrod, pedal, or pedal bracket 2. Adjust, repair or replace components as necessary. Refer to Brake Hydraulic and Assist System Diagnosis . Did you find and correct a condition?	Go to Step 5	Go to Step 3
3	1. Inspect the hydraulic brake system for the following conditions: • Binding calliper pistons • Internally damaged flexible brake hoses; hindering fluid flow • External brake fluid leaks • Kinked or damaged flexible brake hoses and/or pipes • Internal brake fluid leaks; improperly operating master cylinder • Poor brake fluid quality; low boiling point 2. Adjust, repair or replace components as necessary. Refer to Brake Hydraulic and Assist System Diagnosis . Did you find and correct a condition?	Go to Step 5	Go to Step 4
4	1. Inspect the disc brake system for the following conditions: • Excessively worn linings • Glazed linings • Cracked, distorted or damaged linings • Contaminated linings • Binding, damaged or excessively worn calliper hardware and/or lining hardware • Lack of lubrication or excessive corrosion on metal to metal contact surfaces • Excessively worn or corroded disc friction surfaces		

	• Glazed disc friction surfaces • Hard spots, heat checks, blueing discolouration of disc friction surfaces 2. Adjust, repair or replace components as necessary. Refer to Disc Brake System Diagnosis . Did you find and correct a condition?	Go to Step 5	Go to Diagnostic Starting Point - Vehicle
5	1. Install or connect components that were removed or disconnected during diagnosis. 2. Road test the vehicle in order to confirm proper operation. Refer to Brake System Vehicle Road Test . Is the condition still present?	Go to Step 2	System OK

&#169© Copyright Chevrolet. All rights reserved

Brakes Drag

Step	Action	Yes	No
DEFINITION: Brake system does not fully release or has delayed release; vehicle motion may be hindered by brake system without applying brakes.			
1	Were you sent here from the Hydraulic Brake Symptom table?	Go to Step 2	Go to Symptoms - Hydraulic Brakes
2	Is the vehicle equipped with an adjustable stop lamp switch and/or an adjustable cruise control release switch?	Go to Step 3	Go to Step 4
3	1. Inspect the stop lamp switch for proper adjustment to ensure that the brake pedal is fully releasing. 2. Inspect the cruise control release switch, if equipped, for proper adjustment to ensure that the brake pedal is fully releasing. Did you find and correct a condition?	Go to Step 14	Go to Step 4
4	Is the vehicle equipped with a drum-in-disc type of hand brake system?	Go to Step 5	Go to Step 7
5	Ensure the hand brake shoes are not adjusted too tightly, possibly causing drag under certain conditions. Are the hand brake shoes adjusted too tightly?	Go to Step 6	Go to Step 7
6	1. Clean and inspect the hand brake shoes for excessive wear and/or damage. 2. Inspect the drum portion of the discs for excessive wear, blueing discolouration and heat spots. 3. If any of these conditions are present, replace the affected components. 4. Adjust the hand brake system. Did you find and correct a condition?	Go to Step 14	Go to Step 7
7	Inspect the hand brake system for proper operation. Refer to Hand brake System Diagnosis . Did you find and correct a condition?	Go to Step 14	Go to Step 8
8	1. Inspect the disc brake system for the following conditions: • Binding, incorrectly installed or missing calliper hardware and/or lining hardware--Ensure free movement of linings and of calliper, if equipped with sliding type calliper • Lack of lubrication or excessive corrosion on metal to metal contact surfaces • Distorted or damaged linings • Damaged or excessively worn calliper hardware and/or lining hardware		

	• Bent or damaged calliper or mounting component 2. Adjust, repair or replace components as necessary. Refer to Disc Brake System Diagnosis . Did you find and correct a condition?	Go to Step 14	Go to Step 9
9	1. Separate the brake pushrod from the brake pedal. 2. Inspect the brake corners to determine if the brake drag condition is still present. Do the brake corners still exhibit the brake drag condition?	Go to Step 11	Go to Step 10
10	1. Inspect the pushrod for improper positioning and/or damage. Correctly position or replace the pushrod if necessary. 2. Inspect the brake pedal assembly for damage and replace if necessary. Did you complete the repair or replacement?	Go to Step 14	--
11	1. For vacuum boost systems, disconnect the vacuum check valve from the booster to relieve vacuum reserve. 2. Separate the master cylinder from the brake booster. Do not disconnect any brake pipes. 3. Inspect the brake corners to determine if the brake drag condition is still present. Do the brake corners still exhibit the brake drag condition?	Go to Step 13	Go to Step 12
12	Replace the master cylinder assembly. Did you complete the replacement?	Go to Step 14	--
13	1. Inspect the hydraulic brake system for the following conditions. • Improper operation of calliper pistons • Contaminated brake fluid • Internally damaged flexible brake hoses; hindering brake release • Damaged or improperly operating master cylinder 2. Adjust, repair or replace components as necessary. Refer to Brake Hydraulic and Assist System Diagnosis . Did you find and correct a condition?	Go to Step 14	Go to Symptoms - Hydraulic Brakes
14	1. Install or connect components that were removed or disconnected during diagnosis. 2. Road test the vehicle in order to confirm proper operation. Refer to Brake System Vehicle Road Test . Is the condition still present?	Go to Step 2	System OK

&#169© Copyright Chevrolet. All rights reserved

Brake System Slow Release

Step	Action	Yes	No
DEFINITION: Brake system releases and returns to rest slowly; vehicle motion is hindered by brake system briefly after release of brake pedal.			
1	Were you sent here from the Hydraulic Brake Symptom table?	Go to Step 2	Go to Symptoms - Hydraulic Brakes
2	1. Inspect the hydraulic brake and assist system for the following conditions: • Improper operation of calliper pistons • Internally damaged flexible brake hoses; hindering brake release • Contaminated brake fluid • Damaged or improperly operating master cylinder • Damaged or improperly operating hydraulic booster, if equipped • Binding, bent or damaged pedal pushrod, pedal, or pedal bracket 2. Adjust, repair or replace components as necessary. Refer to Brake Hydraulic and Assist System Diagnosis . Did you find and correct a condition?	Go to Step 4	Go to Step 3
3	1. Inspect the disc brake system for the following conditions: • Damaged or excessively worn calliper hardware and/or lining hardware • Distorted or damaged linings • Lack of lubrication or excessive corrosion on metal to metal contact surfaces • Bent or damaged calliper or mounting component 2. Adjust, repair or replace components as necessary. Refer to Disc Brake System Diagnosis . Did you find and correct a condition?	Go to Step 4	Go to Symptoms - Hydraulic Brakes
4	1. Install or connect components that were removed or disconnected during diagnosis. 2. Road test the vehicle in order to confirm proper operation. Refer to Brake System Vehicle Road Test . Is the condition still present?	Go to Step 2	System OK

&#169© Copyright Chevrolet. All rights reserved

Brake Fluid Loss

Step	Action	Yes	No
DEFINITION: Brake fluid level is low not related to lining wear.			
1	Were you sent here from the Hydraulic Brake Symptom table?	Go to Step 2	Go to Symptoms - Hydraulic Brakes
2	1. Inspect the following hydraulic brake system components for brake fluid leaks: • Flexible brake hose connections; threaded and bolted • Flexible brake hose crimp joints • Brake pipe fittings • Calliper piston seals • Wheel cylinder piston seals, if equipped • Master cylinder reservoir • Master cylinder reservoir low pressure hose, if equipped • Brake pressure modulator valve (BPMV) assembly, if equipped 2. Repair or replace components as necessary. Refer to Brake Hydraulic and Assist System Diagnosis . Did you find and correct a condition?	Go to Step 8	Go to Step 3
3	Is the vehicle equipped with a vacuum brake booster?	Go to Step 4	Go to Step 6
4	1. Disconnect the vacuum check valve from the booster to relieve vacuum reserve. 2. Separate the master cylinder from the vacuum brake booster. Do not disconnect any brake pipes. 3. Inspect the rear of the master cylinder for a brake fluid leak. 4. Inspect for brake fluid in the vacuum brake booster. Did you find a brake fluid leak?	Go to Step 5	Go to Symptoms - Hydraulic Brakes
5	Replace the brake master cylinder and the vacuum brake booster. Did you complete the replacement?	Go to Step 8	--
6	1. Wipe clean the external surface of the master cylinder to hydraulic brake booster area, if equipped. 2. Separate the master cylinder from the hydraulic brake booster, if equipped. Do not disconnect any brake pipes. 3. Inspect the rear of the master cylinder for a brake fluid leak.		

	Did you find a brake fluid leak?	Go to Step 7	Go to Symptoms - Hydraulic Brakes
7	Replace the brake master cylinder. Did you complete the replacement?	Go to Step 8	--
8	1. Install or connect components that were removed or disconnected during diagnosis. 2. Road test the vehicle to confirm proper operation. Refer to Brake System Vehicle Road Test . Is the condition still present?	Go to Step 2	System OK

&#169© Copyright Chevrolet. All rights reserved

Disc Brake System Diagnosis

Test Description

The numbers below refer to the step numbers on the diagnostic table:

9. Lubricant leaks from non-brake system components may come in contact with and contaminate brake system components.
10. Lubricant leaks from non-brake system components may come in contact with and contaminate brake system components.
12. Disc brake disc shields/backing plates that come in contact with disc brake discs may cause brake system noise.
15. Disc brake disc thickness variation that exceeds the maximum acceptable level can cause brake pulsation.
19. Disc brake disc thickness variation that exceeds the maximum acceptable level can cause brake pulsation.
22. Disc brake disc assembled lateral runout (LRO) that exceeds the maximum acceptable level can lead to thickness variation.

Step	Action	Yes	No
DEFINITION: This diagnostic table is designed to diagnose ONLY the components of the DISC brake system in order to determine if the DISC brake system is operating properly. You will be directed by the appropriate Symptom table to go to other brake system diagnostic tables as appropriate.			
1	Were you sent here from a Brake Symptom table?	Go to Step 2	Go to Diagnostic Starting Point - Vehicle
2	Visually inspect the disc brake pads for the following conditions: Refer to Brake Pad Inspection . • Lining thickness below specifications • Uneven and/or abnormal wear - edge-to-edge and/or side-to-side • Looseness or damage - including pad hardware • Evidence of contamination from an external substance Did you find any conditions to indicate a concern with any of the front and/or rear disc brake pads?	Go to Step 3	Go to Step 12

3	Are any of the front and/or rear disc brake pads contaminated?	Go to Step 8	Go to Step 4
4	Are any of the front and/or rear disc brake pads worn unevenly?	Go to Step 7	Go to Step 5
5	Are any of the front and/or rear disc brake pads and/or pad hardware loose or damaged?	Go to Step 7	Go to Step 6
6	1. Remove and inspect the worn disc brake pads for glazing, looseness, heat spots or damage. 2. Replace the worn disc brake pads as a complete axle set. Refer to Front Disc Brake Pads Replacement and/or Rear Disc Brake Pads Replacement . Did you complete the inspection and replacement?	Go to Step 12	--
7	**Caution:** Support the brake calliper with heavy mechanic wire, or equivalent, whenever it is separated from its mount and the hydraulic flexible brake hose is still connected. Failure to support the calliper in this manner will cause the flexible brake hose to bear the weight of the calliper, which may cause damage to the brake hose and in turn may cause a brake fluid leak. **Note:** Do NOT disconnect the hydraulic brake flex hoses from the callipers. 1. Remove the front and/or rear disc brake callipers, as appropriate, from the mounting brackets or from the suspension knuckles and support the callipers. Refer to Front Brake Calliper Replacement and/or Rear Brake Calliper Replacement . 2. Inspect the disc brake calliper mounting bracket and the mounting/sliding hardware for the following conditions: Refer to Front Disc Brake Mounting and Hardware Inspection and/or Rear Disc Brake Mounting and Hardware Inspection . • Binding or seized hardware • Worn, damaged or missing hardware components • Loose, bent, cracked, or damaged calliper mounting bracket 3. Replace components as required. Refer to the following procedures, as required: • Front Brake Calliper Bracket Replacement • Rear Brake Calliper Bracket Replacement 4. Replace the unevenly-worn, loose or damaged disc brake pads as a complete axle set. Refer to Front Disc Brake Pads Replacement and/or Rear Disc Brake Pads Replacement . Did you complete the inspection and replacement?	Go to Step 12	--
8	1. Inspect the disc brake callipers, brake hoses and brake pipes for evidence of an external brake fluid leak. 2. Replace any components found to be leaking brake fluid. Refer to the following procedures as required: • Front Brake Calliper Replacement • Rear Brake Calliper Replacement • Front Brake Hose Replacement		

	• Rear Brake Hose Replacement • Brake Pipe Replacement Did you find and correct the source of the leak causing contamination of the pads?	Go to Step 11	Go to Step 9
9	1. Inspect the wheel drive shaft outer seals for damage and evidence of a grease leak. 2. Replace any wheel drive shaft seal that is found to be leaking grease which may be the source of the contamination to the pads. Did you find and correct the source of the leak causing contamination of the pads?	Go to Step 11	Go to Step 10
10	1. Inspect the automatic transmission cooling system lines, if equipped, for damage and evidence of an external fluid leak which may be the source of the contamination to the pads. 2. Inspect the power steering system hoses for damage and evidence of an external fluid leak which may be the source of the contamination to the pads. 3. Replace any components found to be leaking fluid which may be the source of the contamination to the pads. Did you find and correct the source of the leak causing contamination of the pads?	Go to Step 11	--
11	1. Clean the remaining disc brake system components to remove any traces of the contaminant. **Caution:** Support the brake calliper with heavy mechanic wire, or equivalent, whenever it is separated from its mount and the hydraulic flexible brake hose is still connected. Failure to support the calliper in this manner will cause the flexible brake hose to bear the weight of the calliper, which may cause damage to the brake hose and in turn may cause a brake fluid leak. **Note:** Do NOT disconnect the hydraulic brake flex hoses from the callipers. 2. Remove the front and/or rear disc brake callipers, as appropriate, from the mounting brackets and support the callipers. Refer to Front Brake Calliper Replacement and/or Rear Brake Calliper Replacement . 3. Inspect the disc brake calliper mounting/sliding hardware for the following conditions: Front Disc Brake Mounting and Hardware Inspection and/or Rear Disc Brake Mounting and Hardware Inspection . • Binding or seized hardware • Distorted, worn, damaged or missing hardware components 4. Replace the calliper mounting/sliding hardware components as required. 5. Replace the contaminated disc brake pads as a complete axle set. Refer to Front Disc Brake Pads Replacement and/or Rear Disc Brake Pads Replacement . Did you complete the cleaning, inspection and replacement?	Go to Step 12	--
12	Visually inspect each of the rear disc brake disc shields/backing plates, if equipped, for evidence of contact with the brake discs. Are any of the brake disc shields/backing plates contacting the brake discs?	Go to Step 13	Go to Step 14
	Repair or replace the disc brake disc shields/backing plates as required. Refer to Front Brake Shield Replacement or Rear Brake Shield		

13	Replacement . Did you complete the repair or replacement?	Go to Step 14	--
14	1. Check the thickness of each of the disc brake discs. **Note:** Make the following determination AND ANSWER the question INDIVIDUALLY for EACH disc. 2. Make a determination for each brake disc if the disc can be REFINISHED and REMAIN ABOVE the minimum requirements. Refer to Brake Disc Thickness Measurement . Does the disc brake disc meet the minimum requirements for REFINISHING?	Go to Step 15	Go to Step 18
15	**Note:** Perform the following inspection AND ANSWER the question INDIVIDUALLY for EACH disc. Inspect each of the disc brake discs for thickness variation that exceeds the maximum acceptable level. Refer to Brake Disc Thickness Variation Measurement . Does the brake disc exhibit thickness variation that exceeds the maximum acceptable level?	Go to Step 17	Go to Step 16
16	1. Inspect each of the disc brake discs for the following surface and wear conditions: Refer to Brake Disc Surface and Wear Inspection . • Heavy rust and/or pitting • Cracks and/or heat spots • Excessive blueing discolouration • Deep or excessive scoring beyond maximum acceptable level **Note:** Make the following determination AND ANSWER the question INDIVIDUALLY for EACH disc. 2. Make a determination for each brake disc if the disc requires refinishing based upon the results of the inspection. If the brake disc exhibits any of the conditions listed previously, it requires refinishing. Does the brake disc require REFINISHING?	Go to Step 17	Go to Step 22
17	1. Refinish the brake disc. Refer to Brake Disc Refinishing . 2. Inspect the brake disc thickness. Refer to Brake Disc Thickness Measurement . Were you able to REFINISH the brake disc within the minimum requirements?	Go to Step 22	Go to Step 21
18	Is the brake disc at or below the DISCARD requirements?	Go to Step 21	Go to Step 19
	Note: Perform the following inspection AND ANSWER the question INDIVIDUALLY for EACH disc.		

19	Inspect each of the disc brake discs for thickness variation that exceeds the maximum acceptable level. Refer to Brake Disc Thickness Variation Measurement . Does the brake disc exhibit thickness variation that exceeds the maximum acceptable level?	Go to Step 21	Go to Step 20
20	1. Inspect each of the disc brake discs for the following surface and wear conditions: Refer to Brake Disc Surface and Wear Inspection . • Heavy rust and/or pitting • Cracks and/or heat spots • Excessive blueing discolouration • Deep or excessive scoring beyond maximum acceptable level **Note:** Make the following determination AND ANSWER the question INDIVIDUALLY for EACH disc. 2. Make a determination for each brake disc if the disc requires replacement based upon the results of the inspection. If the brake disc exhibits any of the conditions listed previously, it requires replacement. Does the brake disc require REPLACEMENT?	Go to Step 21	Go to Step 22
21	**Note:** Whenever a brake disc is replaced, the assembled lateral runout (LRO) of the disc must be measured to ensure optimum performance of the disc brakes. Replace the brake disc. Refer to Front Brake Disc Replacement or Rear Brake Disc Replacement . Did you complete the replacement?	Go to Step 24	--
22	**Note:** Perform the following inspection AND ANSWER the question INDIVIDUALLY for EACH disc. Inspect each of the disc brake discs for assembled LRO that exceeds the maximum acceptable level. Refer to Brake Disc Assembled Lateral Runout Measurement . Does the brake disc exhibit assembled LRO that exceeds the maximum acceptable level?	Go to Step 23	Go to Step 24
23	Correct the LRO for each brake disc that was determined to have LRO exceeding the maximum acceptable level. Refer to Brake Disc Assembled Lateral Runout Measurement . Did you complete the operation?	Go to Step 24	--
24	Install or connect components that were removed or disconnected during diagnosis. Did you complete the operation?	Disc Brake System OK	--

		Return to Symptom Table	

&#169© Copyright Chevrolet. All rights reserved

Brake Hydraulic and Assist System Diagnosis

Step	Action	Yes	No
DEFINITION: This diagnostic table is designed to diagnose ONLY the components of the brake HYDRAULIC and ASSIST systems in order to determine if the HYDRAULIC and ASSIST systems are operating properly. You will be directed by the appropriate Symptom table to go to other brake system diagnostic tables as appropriate.			
1	Were you sent here from a Brake Symptom table or from an electrical diagnostic procedure?	Go to Step 2	Go to Symptoms - Hydraulic Brakes
2	1. Inspect the brake fluid for the following conditions, indicating brake fluid contamination: • Fluid separation, indicating two types of fluid are present -- Swirled appearance - oil-based substance -- Layered appearance - silicone-based substance • Fluid discolouration - Cloudy appearance - moisture -- Dark appearance/suspended particles in fluid - dirt, rust, corrosion, brake dust 2. Inspect the master cylinder reservoir cap diaphragm and the reservoir-to-master cylinder grommets for swelling, indicating fluid contamination. Do any of the above fluid contamination conditions exist?	Go to Step 3	Go to Step 4
3	1. Flush the hydraulic brake system and repair or replace components as directed based upon the type of fluid contamination present. Refer to Hydraulic Brake System Flushing . 2. Pressure bleed the hydraulic brake system. Refer to Hydraulic Brake System Bleeding : Pressure . 3. Perform the Antilock Brake System Automated Bleed . Did you complete the operation and any required repairs and/or replacements?	Go to Step 4	--
	1. Inspect the following hydraulic brake system components for external fluid leaks: • Hydraulic brake hoses • Hydraulic brake pipes • Brake master cylinder reservoir to brake pressure modulator valve (BPMV) feed and return hoses • Brake callipers		

4	• Brake master cylinder • BPMV 2. Inspect the hydraulic brake pipes, master cylinder reservoir hoses, and flexible brake hoses for signs of a fluid restriction, such as being bent, kinked, pinched, or damaged. Refer to Brake Pipe and Hose Inspection . 3. Repair or replace any of the hydraulic components found to be leaking brake fluid. 4. Replace any of the hydraulic brake pipes, master cylinder reservoir hoses, and/or flexible brake hoses found to be bent, kinked, pinched, or damaged. Refer to the appropriate procedures: • Master Cylinder Replacement Brake master cylinder reservoir cap diaphragm • Front Brake Hose Replacement • Rear Brake Hose Replacement • Brake Pipe Replacement • Brake Master Cylinder Reservoir Hose Replacement • Front Brake Calliper Overhaul or Front Brake Calliper Replacement • Rear Brake Calliper Overhaul or Rear Brake Calliper Replacement • Electronic Brake Control Module with Brake Pressure Modulator Valve Replacement Did you complete the inspections and any necessary repairs or replacements?	Go to Step 5	-
5	Perform the system deactivation and vehicle preparation steps: **Note:** To ensure the complete brake modulator and high pressure accumulator (HPA) pressure relief procedure is allowed to occur; the brake controller must see 1 pedal apply with the propulsion system enabled, followed by a proper shutdown without applying the brake pedal. 1. Enable the propulsion system. 2. Apply and release the brake pedal. 3. Place the transmission in PARK. **Note:** The power button must be in the OFF position, and without applying the brake pedal to ensure the brake modulator and high pressure accumulator (HPA) pressure relief occurs. This process will take approximately 1-3 minutes. 4. Place the power button in the OFF position, without applying the brake pedal. 5. Remove the remote keyless entry (RKE) transmitter and close all of the vehicle doors. 6. Wait approximately 1-3 minutes until the brake modulator and HPA pressure relief is complete. 7. Inspect and adjust the brake fluid level in the brake master cylinder reservoir. Refer to Master Cylinder Reservoir Filling . 8. Connect a battery charger to the 12V battery. Refer to Battery Charging .		--

	9. Install a scan tool to the vehicle. **Note:** The power button must remain in the ON/RUN position, with the engine OFF during the remainder of this diagnostic procedure, unless otherwise instructed. 10. Place the power button in the ON/RUN position. 11. Ensure the scan tool is communicating with the vehicle. Did you complete the system deactivation and vehicle preparation steps?	Go to Step 6	
6	Have you already performed the brake sensor performance data checks as part of an electrical DTC diagnostic procedure?	Go to Step 8	Go to Step 7
7	Perform the brake sensor performance data check procedure. 1. Place the power button in the ON/RUN position. 2. Place the transmission in PARK. **Note:** Do not depress the brake pedal during the EBCM relearn. 3. Using the scan tool, perform the EBCM relearn. Do not depress the brake pedal. 3.1. Select Diagnostics. 3.2. Select the appropriate vehicle information. 3.3. Select Chassis. 3.4. Select EBCM. 3.5. Select Module Setup. 3.6. Select EBCM Relearn and follow the scan tool instructions. **Note:** To ensure the complete brake modulator and high pressure accumulator (HPA) pressure relief procedure is allowed to occur; the brake controller must see 1 pedal apply with the propulsion system enabled, followed by a proper shutdown without applying the brake pedal. 4. Enable the propulsion system. 5. Apply and release the brake pedal. **Note:** The power button must be in the OFF position, and without applying the brake pedal to ensure the brake modulator and high pressure accumulator (HPA) pressure relief occurs. This process will take approximately 1-3 minutes. 6. Place the power button in the OFF position, without applying the brake pedal. 7. Remove the remote keyless entry (RKE) transmitter and close all of the vehicle doors. 8. Wait approximately 1-3 minutes until the brake modulator and HPA pressure relief is complete. **Note:** The power button must remain in the ON/RUN position, with the engine OFF during the remainder of this diagnostic procedure, unless otherwise instructed.		--

	9. Place the power button in the ON position, engine OFF, and do not apply the brake pedal. 10. Using the scan tool, select Data Display for the EBCM, scroll through the data list, select and accept the following: • Master Cylinder Pressure Sensor • Rear Brake Pressure Sensor • Brake Pressure Sensor • Accumulator Pressure Sensor • Brake Master Cylinder (BMC) Primary Piston Position Sensor 5V reference • BMC Primary Piston Sensor A • BMC Primary Piston Sensor B 11. Power button ON, engine OFF, brakes not applied, verify the following sensor parameters are within the specified values: • Master Cylinder Pressure Sensor - Less than 100 kPa (15 psi) • Rear Brake Pressure Sensor - Less than 100 kPa (15 psi) • Brake Pressure Sensor - Less than 100 kPa (15 psi) • Accumulator Pressure Sensor - Less than 800 kPa (116 psi) 12. If any of the sensor parameters on the scan tool are not within the specified ranges, replace the BPMV. Refer to Electronic Brake Control Module with Brake Pressure Modulator Valve Replacement . 13. With the power button ON, engine OFF, brakes not applied, verify the following sensor parameters are within the specified values: • BMC Primary Piston Position Sensor 5V Reference - Between 4.75V and 5.25V • BMC Primary Piston Position Sensor A - Less than 0.8V • BMC Primary Piston Position Sensor B - Greater than 4.2V 14. If any of the sensor parameters are not within the specified ranges, see DTC C0277 for further diagnostic information. Did you complete the operation and any required repairs and/or replacements?	Go to Step 8	
8	Inspect for proper brake pedal travel. Refer to Brake Pedal Travel Measurement and Inspection . Was the brake pedal travel within specification?	Go to Step 10	Go to Step 9
9	1. Inspect for worn, missing, misaligned, bent or damaged brake pedal system components. 2. Inspect the brake pedal bushings for excessive wear and/or damage and inspect the brake pedal for a misaligned, bent and/or damaged condition. 3. Replace the brake pedal system components that are worn, missing, misaligned, bent or damaged. 4. Perform the entire Antilock Brake System Automated Bleed . 5. Re-inspect for proper brake pedal travel. Refer to Brake Pedal Travel Measurement and Inspection . Is the brake pedal now within specification?	Go to Step 10	Go to Step 20
	Perform the brake master cylinder (BMC) primary circuit test:		

10	**Note:** The power button must remain in the ON position, engine OFF during this entire procedure. 1. Ensure the power button is ON, engine OFF. 2. Using the scan tool, select Data Display for the EBCM, scroll through the Data list, select and accept the following: • Master Cylinder Pressure Sensor • Brake Master Cylinder (BMC) Primary Piston Reference Position 3. While observing the master cylinder pressure and the BMC primary piston position sensors on the scan tool data display, using moderate speed and moderate effort, apply and maintain the brake pedal to a force of 2500 kPa (363 psi). 4. Wait for 10 seconds for the system to settle. 5. While ensuring 2500 kPa (363 psi) of force is maintained, observe pedal operation for an additional 30 seconds. **Note:** The brake pedal should remain firm and steady while maintaining the apply force during the observation period. Did the brake pedal remain firm and steady during the observation period?	Go to Step 11	Go to Step 20
11	Ensure the brake corners are functioning properly: **Danger:** Do not use a service jack in locations other than those specified to lift this vehicle. Lifting the vehicle with a jack in those other locations could cause the vehicle to slip off the jack and roll; this could cause injury or death. **Note:** The aid of an assistant will be necessary. 1. Raise and support the vehicle. Allow the tyre and wheel assemblies to rotate freely. Refer to Lifting and Jacking the Vehicle . **Note:** The power button must remain in the ON position, engine OFF during this entire procedure. 2. Ensure the power button is in the ON position, engine OFF. 3. Verify the hand brake is released. 4. Place the transmission in NEUTRAL. 5. Continue observing the master cylinder pressure sensor on the scan tool data display. 6. Using moderate speed and moderate effort, apply and maintain the brake pedal to a force of 2500-3000 kPa (363-435 psi). 7. While maintaining the brake apply force, wait 10 seconds, then have an assistant attempt to rotate the rear wheels. 8. If the rear wheels are locked, maintain that amount of apply force. 9. If the rear wheels are not locked, increase the apply force just enough to lock the rear wheels. Maintain that amount of apply force. 10. Have an assistant attempt to rotate the front wheels. 11. Inspect any suspect brake corners for possible component hydraulic restriction and/or mechanical binding. 12. Release the brake pedal and have an assistant rotate each of the wheels again to check for possible brake drag. **Note:** None of the wheels should be able to be rotated during the brake apply. None of the wheels should exhibit drag after brake release. Did the brake corners apply and release properly?	Go to Step 14	Go to Step 12

12	Determine if the brake calliper is restricting the flow of brake fluid and/or not operating properly. 1. Remove the appropriate tyre and wheel assembly. Refer to Tyre and Wheel Removal and Installation . 2. Inspect the hydraulic function of the brake calliper for proper operation. Refer to Hydraulic Brake Component Operation Visual Inspection . 3. Open the suspected calliper bleeder valve. 4. Using a large C-clamp or clamps, evenly compress the calliper piston or pistons. Observe for an unrestricted flow of brake fluid and for free movement of the calliper piston or pistons. 5. Close the calliper bleeder valve. Was the flow of brake fluid unrestricted and did the calliper piston or pistons move freely?	Go to Step 13	Go to Step 19
13	Determine if the brake hose is restricting the flow of brake fluid. 1. Carefully inspect the flexible brake hose at the restricted location for signs of a fluid restriction, such as being bent, kinked, pinched, or damaged. Refer to Brake Pipe and Hose Inspection . 2. Replace the brake hose if it is found to be damaged. Refer to the appropriate procedure: • Front Brake Hose Replacement • Rear Brake Hose Replacement Did you complete the inspection and any necessary replacement?	Go to Step 14	--
14	Perform the BMC secondary circuit test. **Note:** The aid of an assistant will be necessary. 1. Reinstall the tyre and wheel assembly, if removed previously to verify brake corner function. 2. With the vehicle still supported at a working height, allow the tyre and wheel assemblies to rotate freely. **Note:** The power button must remain in the ON position, engine OFF during this entire procedure. 3. Ensure the power button is ON, engine OFF and the transmission is in NEUTRAL. 4. Continue observing the master cylinder pressure sensor on the scan tool data display. 5. Using moderate speed and moderate effort, apply and maintain the brake pedal to a force of 2500-3000 kPa (363-435 psi). 6. While maintaining the brake pedal apply force, wait 10 seconds, then have an assistant attempt to rotate the rear wheels. 7. If the rear wheels are locked, maintain that amount of apply force. 8. If the rear wheels are not locked, increase the apply force just enough to lock the rear wheels. Maintain that amount of apply force. 9. Wait 20 seconds, then attempt to rotate the front wheels. 10. Attempt to rotate the rear wheels again. **Note:** None of the wheels should be able to be rotated during the brake apply. Could any of the wheels be rotated during the brake apply?	Go to Step 15	Go to Step 18

15	Were either of the front wheels able to be rotated during the brake apply?	Go to Step 20	Go to Step 16
16	Perform the brake modulator motor, HPA, and fluid control solenoid test: 1. Using the scan tool data display, scroll through the Data List, select and accept Accumulator Pressure Sensor. 2. While observing the accumulator pressure sensor data, start the engine and allow it to idle to activate and pressurise the brake system. 3. Observe the accumulator pressure sensor data for 40 seconds. **Note:** The accumulator pressure sensor data should rise from 0 kPa (0 psi) to 17,000 kPa (2466 psi) within 40 seconds. Did the brake modulator provide the specified amount of pressure within the allotted time period?	Go to Step 18	Go to Step 17
17	1. Perform the entire brake system automated bleed procedure. Refer to Antilock Brake System Automated Bleed . 2. Place the transmission in PARK. **Note:** The ignition must be OFF, without pausing at ACCESSORY, and without applying the brake pedal to ensure the brake modulator and high pressure accumulator (HPA) pressure relief occurs. This process will take approximately 1-3 minutes. 3. Place the power button in the OFF position, without applying the brake pedal. 4. Wait approximately 1-3 minutes until the brake modulator and HPA pressure relief is complete. 5. Again perform the brake modulator motor, HPA, and fluid control solenoid test: 5.1. Using the scan tool data display, scroll through the Data List, select and accept Accumulator Pressure Sensor. 5.2. While observing the accumulator pressure sensor data, activate the propulsion system to activate and pressurise the brake system. 5.3. Observe the accumulator pressure sensor data for 40 seconds. **Note:** The accumulator pressure sensor should rise from 0 kPa (0 psi) to 17,000 kPa (2466 psi) within 40 seconds. Did the brake modulator provide the specified amount of pressure within the allotted time period?	Go to Step 18	Go to Step 21
18	Perform the brake pedal simulator test: 1. Activate the propulsion system to activate and pressurise the brake system. 2. Continue observing the master cylinder pressure and the BMC primary piston position sensors on the scan tool data display. 3. Using moderate speed and moderate effort, apply and maintain the brake pedal to a force of 2500 kPa (363 psi). 4. Observe both pedal operation and master cylinder pressure for a period of 20 seconds. **Note:** The brake pedal should remain firm and steady and master cylinder pressure should remain constant. Did the brake pedal remain firm and steady, and did the master cylinder pressure remain constant?	Go to Step 22	Go to Step 21
19	Repair or replace any brake calliper that was not operating properly. Refer to the appropriate procedure: • Front Brake Calliper Replacement or Front Brake Calliper Overhaul		--

	• Rear Brake Calliper Replacement or Rear Brake Calliper Overhaul Did the brake pedal remain firm and steady, and did the master cylinder pressure remain constant?	Go to Step 22	
20	1. Replace the brake master cylinder. Refer to Master Cylinder Replacement . 2. Pressure bleed the hydraulic brake system. Refer to Hydraulic Brake System Bleeding : Pressure . 3. Perform the entire brake system automated bleed procedure. Refer to Antilock Brake System Automated Bleed . Did you complete the replacement and repair procedures?	Go to Step 22	--
21	1. Replace the BPMV. Refer to Electronic Brake Control Module with Brake Pressure Modulator Valve Replacement . 2. Pressure bleed the hydraulic brake system. Refer to Hydraulic Brake System Bleeding : Pressure . 3. Perform the entire brake system automated bleed procedure. Refer to Antilock Brake System Automated Bleed .	Go to Step 22	--
22	Install or connect any components that were removed or disconnected during diagnosis. Did you complete the operation?	Brake Hydraulic and Assist System OK Return to Symptom Table	--

&#169© Copyright Chevrolet. All rights reserved

Brake System Vehicle Road Test

Preliminary Inspections

1. Visually inspect easily accessible brake system components for obvious damage and/or leaks which may indicate that the vehicle should not be driven until further inspections have been completed.
2. Inspect the brake master cylinder reservoir fluid level and adjust only if necessary for brake system road testing. Refer to Master Cylinder Reservoir Filling .
3. Inspect the tyre inflation pressures and adjust as necessary.
4. Inspect the tyre tread patterns to ensure that they are the same or very similar, especially per axle.
5. Ensure that the vehicle is not loaded unevenly prior to brake system road testing.

Road Testing Procedure

Warning: Road test a vehicle under safe conditions and while obeying all traffic laws. Do not attempt any manoeuvres that could jeopardise vehicle control. Failure to adhere to these precautions could lead to serious personal injury and vehicle damage.

1. Start the engine and allow it to idle.
2. Check to see if the brake system warning lamp remains illuminated.
3. If the brake system warning lamp remains illuminated, DO NOT proceed to test drive the vehicle until it is diagnosed and repaired. Refer to Symptoms - Hydraulic Brakes .
4. Select a smooth, dry, clean and level road or large lot that is as free of traffic and obstacles as possible for brake system low speed road testing.
5. With the transmission in PARK, lightly apply the brake pedal. Observe both the pedal feel and the pedal travel.
6. If the brake pedal apply felt spongy, or the pedal travel was excessive, DO NOT drive the vehicle until it is repaired.
7. If the brake pedal apply did not feel spongy and the pedal travel was not excessive, proceed to step 8.
8. Release and apply the brakes.
9. While continuing to apply the brakes, shift the transmission into DRIVE, release the brakes and allow the engine to idle the vehicle away from the stopped position. Observe for a slow release of the brake system.
10. With the aid of an assistant to observe the vehicle's performance from outside of the vehicle, drive the vehicle at a low speed and lightly apply the brakes while driving past the assistant. Have the assistant observe for brake system noise from the side of the vehicle closest to them, while you observe both the pedal effort and the pedal travel.
11. If the brake pedal apply effort was excessive, or the pedal travel was excessive, DO NOT continue to test drive the vehicle until it is repaired.
12. If the brake pedal apply effort was not excessive and the pedal travel was not excessive, proceed to step 13.
13. Drive the vehicle in the opposite direction, at the same low speed and lightly apply the brakes while driving past the assistant. Have the assistant observe for brake system noise from the side of the vehicle closest to him.
14. Drive the vehicle at a low speed and shift the transmission into NEUTRAL without applying the brakes. Observe for a rapid deceleration in vehicle speed, indicating

possible brake drag.

15. Select a smooth, dry, clean and level road that is as free of heavy traffic as possible for brake system moderate speed road testing.
16. Drive the vehicle at a moderate speed. Observe for a pull and/or incorrect tracking of the vehicle without the brakes applied.
17. While continuing to drive the vehicle at a moderate speed, perform several light applies of the brakes. Observe the pedal effort and the pedal travel, observe for brake system noise, pulsation and/or brake drag.
18. If the brake pedal apply effort was excessive, or the pedal travel was excessive, DO NOT continue to test drive the vehicle until it is repaired.
19. If the brake pedal apply effort was not excessive and the pedal travel was not excessive, proceed to step 20.
20. While continuing to drive the vehicle at a moderate speed, perform several moderate applies of the brakes. Observe the pedal effort and the pedal travel, observe for brake system pulsation and/or uneven braking action - either side to side, or front to rear.

    A small amount of vehicle front end dip is expected during a moderate apply of the brakes.

21. If the brake pedal apply effort was excessive, or the pedal travel was excessive, DO NOT continue to test drive the vehicle until it is repaired.

© Copyright Chevrolet. All rights reserved

Brake Pedal Travel Measurement and Inspection

Special Tools

CH-28662 Brake Pedal Effort Gauge

Note: The brake corners must be cool to obtain the most accurate measurement.

1. Place the transmission in PARK.

   Note: The ignition must be OFF, without pausing at ACCESSORY, and without applying the brake pedal to ensure the brake modulator and high pressure accumulator (HPA) pressure relief occurs. This process will take approximately 1-3 minutes.

2. Turn the ignition OFF, without pausing at ACCESSORY, and without applying the brake pedal.

   Remove the ignition key.

3. Wait approximately 1-3 minutes until the brake modulator and HPA pressure relief is complete.
4. Inspect the battery state of charge. Refer to Battery Inspection/Test .
5. If necessary, connect a battery charger to the 12V battery. Refer to Battery Charging .
6. Install the *CH-28662* Brake Pedal Effort Gauge to the brake pedal.
7. Install a scan tool to the vehicle.

   Note: The ignition switch must remain ON, engine OFF during this entire procedure.

8. Turn the ignition ON with the engine OFF.
9. Using the scan tool, perform the following steps:
   9.1. Select Diagnostics
   9.2. Select the appropriate vehicle information
   9.3. Select Chassis
   9.4. Select Electronic Brake Control Module (EBCM)
   9.5. Select Data Display
   9.6. Scroll through the Data List, select and accept Brake Master Cylinder (BMC) Primary Piston Reference Position, and Master Cylinder Pressure Sensor
10. While observing the master cylinder pressure on the scan tool data display, using moderate speed and moderate effort, press the brake pedal to a force of 5000 kPa (725 psi).

11. Record the distance displayed on the scan tool that the BMC primary piston has travelled at a pedal apply force of 5000 kPa (725 psi).
12. Release the brake pedal.
13. Wait 15 seconds, then repeat steps 10-12 to obtain a second measurement.
14. Compute the average of the first and second measurements recorded during the brake applies.

Specification

Maximum brake master cylinder (BMC) primary piston travel, (measured with the ignition ON, engine OFF and the brakes cool), at a brake pedal apply force of 5000 kPa (725 psi): 18 mm (0.71 in)

© Copyright Chevrolet. All rights reserved

Brake System External Leak Inspection

Warning: Refer to Brake Fluid Irritant Warning in the Preface section.

Caution: Refer to Brake Fluid Effects on Paint and Electrical Components Caution in the Preface section.

1. In order to inspect for external brake fluid leaks, first check the fluid level in the master cylinder.

   While a slight brake fluid level drop can be considered a normal condition due to brake lining wear, a very low level may indicate a brake fluid leak in the hydraulic system.

   If the fluid level is abnormally low, adjust the brake fluid level. Refer to Master Cylinder Reservoir Filling .

2. Start the engine and allow it to idle.
3. Apply constant, moderate foot pressure to the brake pedal.

   If the brake pedal gradually falls away while under foot pressure, there may be a brake fluid leak.

4. Turn OFF the ignition.
5. Visually inspect the following brake system components for brake fluid leaks, excessive corrosion, and damage. Give particular attention to all brake pipe and flexible hose connections to ensure that there are not any slight brake fluid leaks - even though the brake pedal may feel firm and hold steady:
   - Master cylinder brake pipe fittings
   - All brake pipe connections
   - Brake pipes
   - Brake hoses and connections
   - Brake callipers and/or wheel cylinders, if equipped
6. While slight dampness around the master cylinder reservoir can be considered acceptable, brake fluid leaking from any of the brake system components requires immediate attention. If any of these components exhibit signs of brake fluid leakage, repair or replace those components. After the repair or replacement, reinspect the hydraulic brake system to assure proper function.

&#169© Copyright Chevrolet. All rights reserved

Brake System Internal Leak Test

Warning: Refer to Brake Fluid Irritant Warning in the Preface section.

Caution: Refer to Brake Fluid Effects on Paint and Electrical Components Caution in the Preface section.

1. Ensure is ignition is OFF for at least 60 seconds to allow the system to depressurise and deplete the power reserve.
2. Apply the brake pedal several times to verify the power reserve is fully depleted.
3. Apply light, steady pressure to the brake pedal. Observe both the brake pedal feel and travel.
4. Release the brake pedal.
5. If the brake pedal apply felt spongy, but the brake pedal travel was not excessive, perform the following steps:
   5.1. Inspect the brake system for external leaks. Refer to Brake System External Leak Inspection .
   5.2. Pressure bleed the brake system in order to purge any air that may be trapped in the system. Refer to Hydraulic Brake System Bleeding : Pressure .

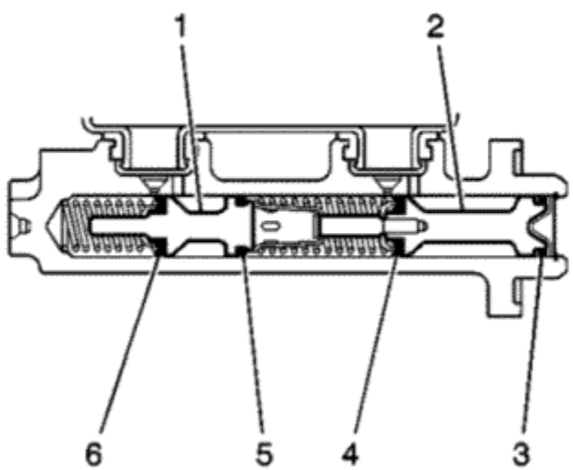

6. If the brake pedal apply did not feel spongy, but the brake pedal travel was excessive, perform the following steps:
   6.1. Loosen the master cylinder-to-adapter mounting nuts.

6.2. Carefully pull the master cylinder away from the adapter just enough to inspect the mounting surface of the master cylinder.
6.3. Inspect the master cylinder mounting surface at the primary piston (2) for brake fluid leaks.

7. If the master cylinder exhibits any leakage around the primary piston (2), then the primary piston primary seal (4) and/or secondary seal (3) is leaking and the master cylinder requires replacement.
8. If the master cylinder primary piston (2) does not exhibit any leakage, install the master cylinder to the adapter and pressure bleed the brake system. Refer to Hydraulic Brake System Bleeding : Pressure .
9. If the brake pedal apply did not feel spongy, and the brake pedal travel was initially steady and not excessive, but then gradually fell, then the master cylinder requires replacement due to an internal leak past a piston seal.
10. If the brake pedal apply did not feel spongy, and the brake pedal travel was initially steady and not excessive, then fell slightly, then became steady again, then the brake pressure modulator valve (BPMV) may be leaking internally, and may require replacement.

© Copyright Chevrolet. All rights reserved

Hydraulic Brake Component Operation Visual Inspection

Warning: Refer to Brake Fluid Irritant Warning in the Preface section.

Caution: Refer to Brake Fluid Effects on Paint and Electrical Components Caution in the Preface section.

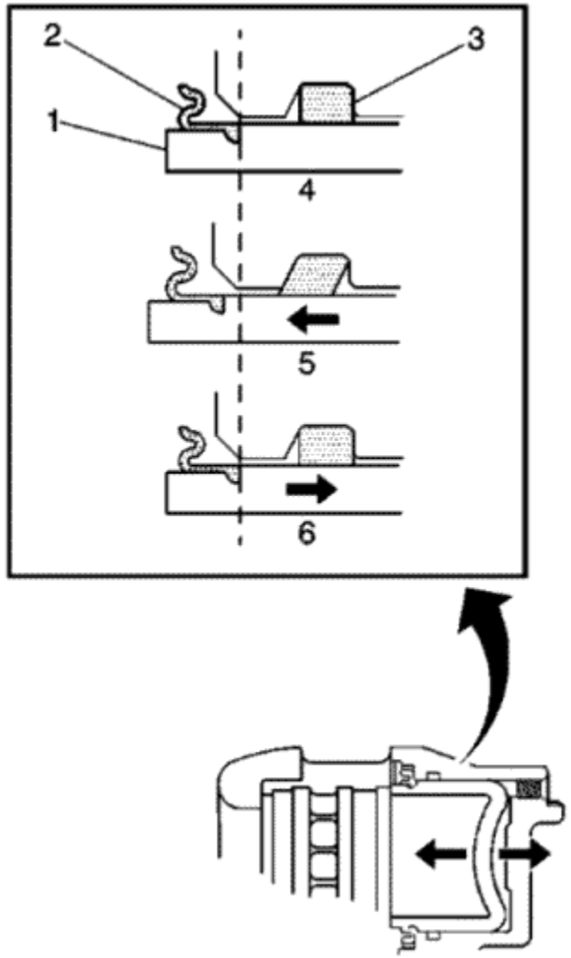

1. With the tyre and wheel assemblies removed and the brake discs retained by wheel nuts, visually inspect the calliper piston dust boot (2) sealing area to ensure that there are no brake fluid leaks.
2. If any evidence of a brake fluid leak is present, the brake calliper requires overhaul or replacement.
3. While the brake system is at rest (4), observe the position of the calliper piston (1) in relation to the calliper housing.
4. Have an assistant apply and release the brake pedal several times while you observe the operation of the hydraulic brake calliper.
   4.1. Observe the calliper piston (1) for unrestricted and even movement during each apply of the brake system (5).
   4.2. Observe the calliper piston (1) for an unrestricted and even return motion during each release of the brake system (6).
5. If the calliper piston (1) did not exhibit unrestricted and even movement during brake system apply and/or release, the piston square seal (3) may be worn or damaged and the calliper may require overhaul or replacement.

© Copyright Chevrolet. All rights reserved

Brake Pipe and Hose Inspection

Warning: Refer to Brake Fluid Irritant Warning in the Preface section.

Caution: Refer to Brake Fluid Effects on Paint and Electrical Components Caution in the Preface section.

1. Visually inspect all of the brake pipes for the following conditions:
   - Kinks, improper routing, missing or damaged retainers
   - Leaking fittings, excessive corrosion
2. If any of the brake pipes exhibited any of the conditions listed, then the identified pipe, or pipes, require replacement.
3. Ensure that the vehicle axles are properly supported at ride height in order to maintain the proper relationship of the flexible brake hoses to the chassis.

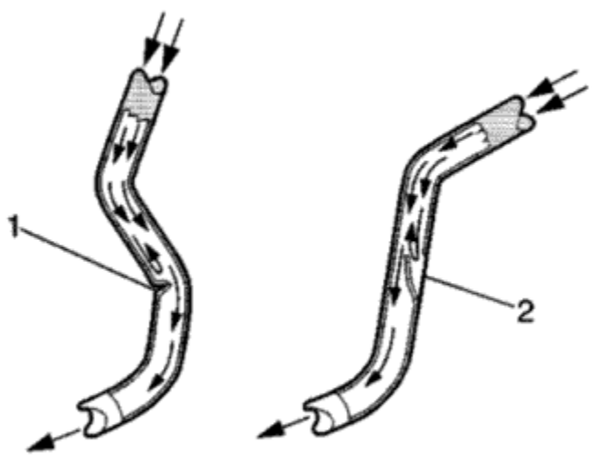

4. Visually inspect all of the flexible brake hoses for the following conditions:
   - Kinks (1), improper routing, twists, chafing, missing or damaged retainers
   - Leaking connections, cracking, dry-rot, blisters, bulges

5. If any of the flexible brake hoses exhibited any of the conditions listed, then the identified flexible brake hose, or hoses require replacement.
6. Squeeze the flexible brake hoses with firm finger pressure to check for soft spots (2), indicating an internal restriction. Check the entire length of each flexible brake hose.
7. If any of the flexible brake hoses were found to have soft spots (2), then the identified flexible brake hose, or hoses require replacement.

&#169© Copyright Chevrolet. All rights reserved

Master Cylinder Reservoir Filling

Warning: Refer to Brake Fluid Irritant Warning in the Preface section.

Caution: Only use products that comply with GM specifications and check manufacturer information respectively. We recommend the use of GM genuine products. Instructions must be followed at all times. The use of any type of fluid other than the recommended type of brake fluid, may cause contamination which could result in damage to the internal rubber seals and/or rubber linings of hydraulic brake system components.

Caution: Refer to Brake Fluid Effects on Paint and Electrical Components Caution in the Preface section.

1. Visually inspect the brake fluid level through the brake master cylinder reservoir.
2. If the brake fluid level is at or below the half-full point during routine fluid checks, the brake system should be inspected for wear and possible brake fluid leaks.
3. If the brake fluid level is at or below the half-full point during routine fluid checks, and an inspection of the brake system did not reveal wear or brake fluid leaks, the brake fluid may be topped-off up to the maximum-fill level.
4. If brake system service was just completed, the brake fluid may be topped-off up to the maximum-fill level.
5. If the brake fluid level is above the half-full point, adding brake fluid is not recommended under normal conditions.
6. If brake fluid is to be added to the master cylinder reservoir, clean the outside of the reservoir on and around the reservoir cap prior to removing the cap and diaphragm. Use only Delco Supreme 11®, GM P/N 12377967 (Canadian P/N 992667), or equivalent DOT-3 brake fluid from a clean, sealed brake fluid container.

© Copyright Chevrolet. All rights reserved

Master Cylinder Reservoir Replacement

Removal Procedure

Warning: Refer to Brake Fluid Irritant Warning in the Preface section.

Caution: Refer to Brake Fluid Effects on Paint and Electrical Components Caution in the Preface section.

1. Remove the front suspension strut housing brace. Refer to Front Suspension Strut Housing Brace Replacement .

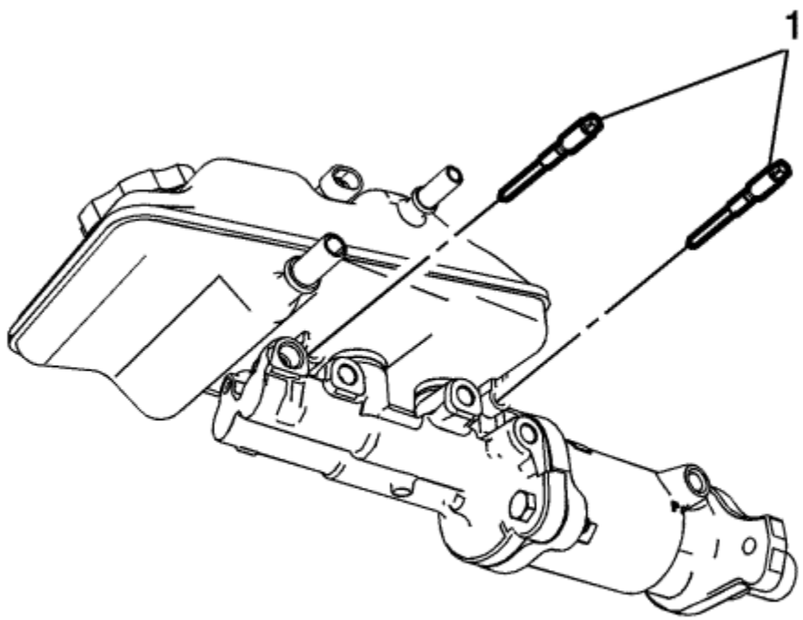

2. Remove the brake master cylinder reservoir bolts (1).

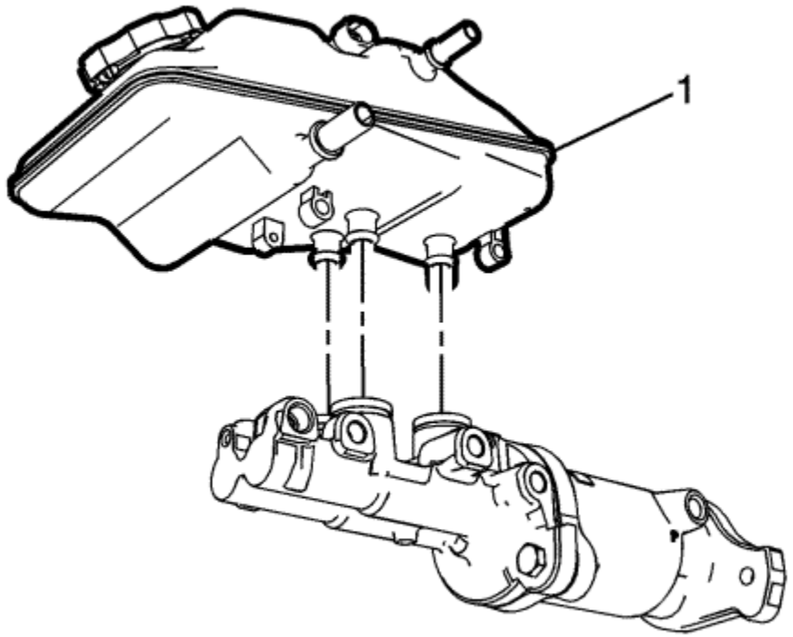

3. Carefully pull the master cylinder reservoir (1) straight upward and remove the master cylinder reservoir from the master cylinder.

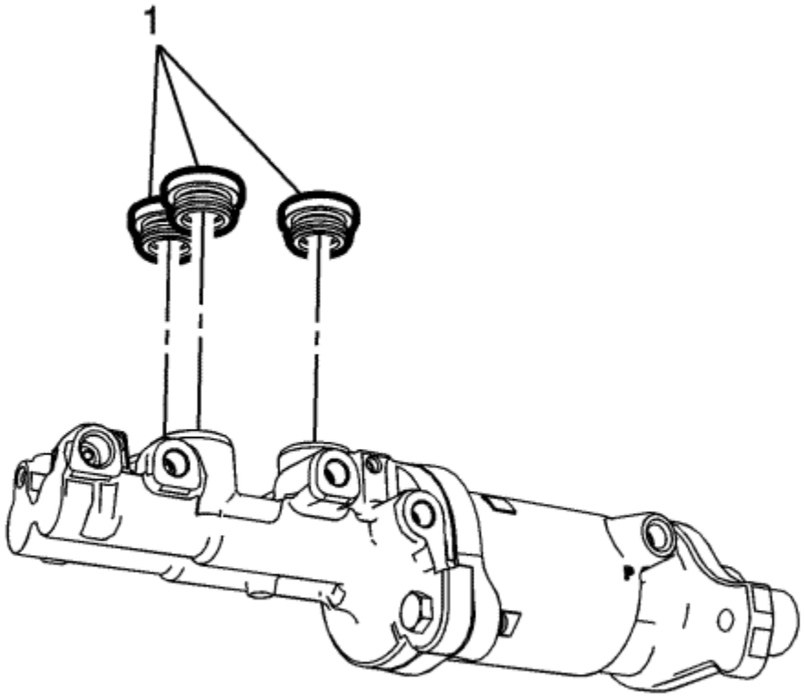

4. Remove and discard the brake master cylinder reservoir seals (1).

Installation Procedure

1. Lightly lubricate the master cylinder reservoir seals with GM approved brake fluid from a clean, sealed brake fluid container. Refer to Adhesives, Fluids, Lubricants, and Sealers .

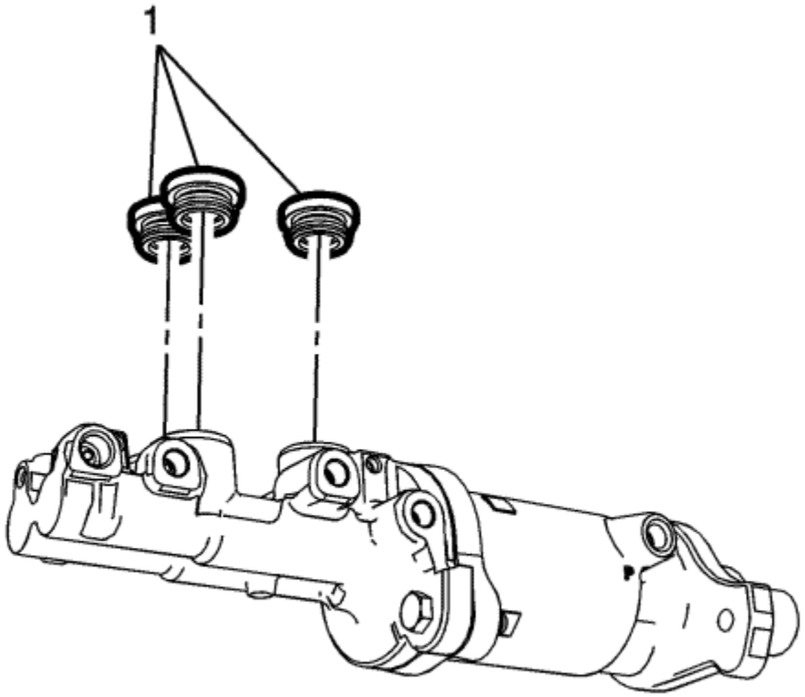

2. Install the brake master cylinder reservoir seals (1).

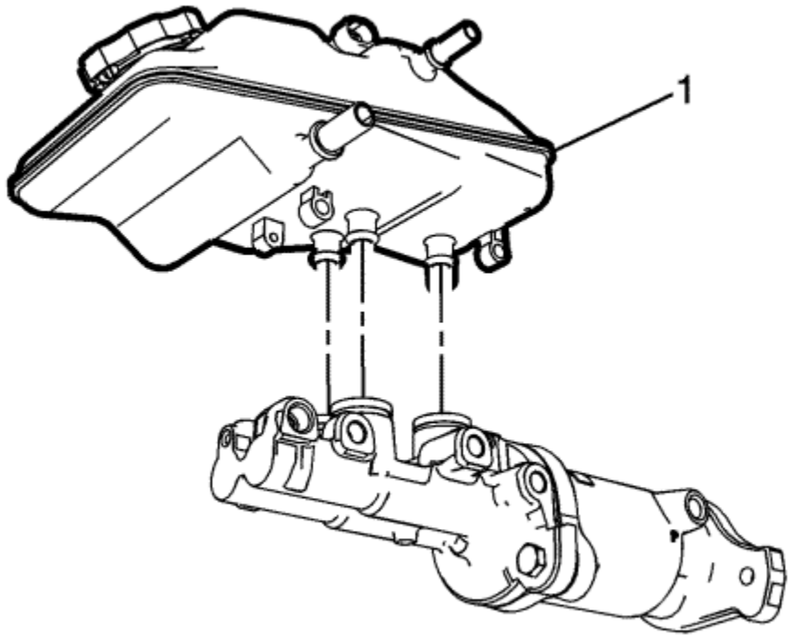

3. Carefully install the master cylinder reservoir (1) to the master cylinder.

   Caution: Refer to Fastener Caution in the Preface section.

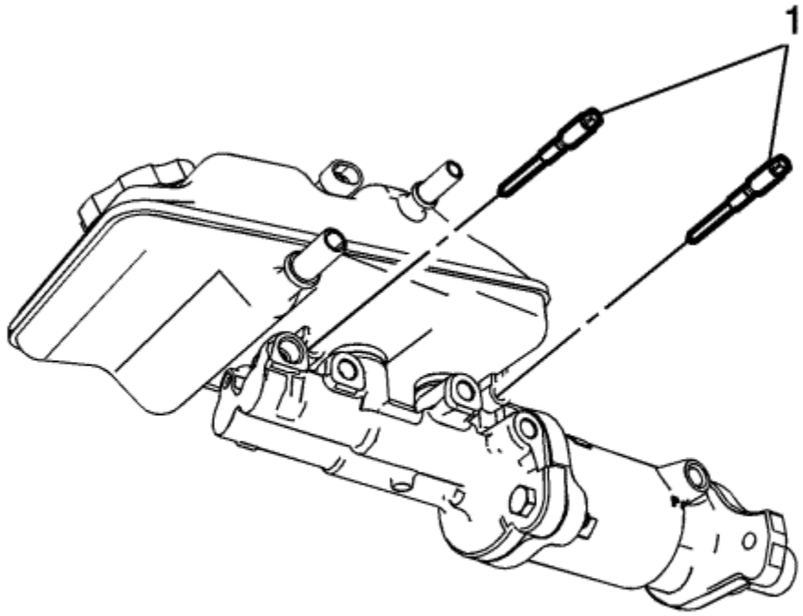

4. Install the brake master cylinder reservoir bolts (1) and tighten to **8 N·m (71 lb in)**.
5. Install the front suspension strut housing brace. Refer to Front Suspension Strut Housing Brace Replacement .

© Copyright Chevrolet. All rights reserved

Master Cylinder Replacement

Removal Procedure

Warning: Refer to Brake Fluid Irritant Warning in the Preface section.

Caution: Refer to Brake Fluid Effects on Paint and Electrical Components Caution in the Preface section.

Note: The transmission must be in the PARK position, the power button in the OFF position, and the brakes not applied to ensure the brake modulator and high pressure accumulator (HPA) pressure relief occurs. This process will take approximately 1 to 3 minutes.

1. Place the transmission in PARK.
2. Place the power button in the OFF position.
3. Remove the remote keyless entry (RKE) transmitter and close all of the vehicle doors.

Note: During the pressure relief process, the fluid level in the master cylinder reservoir will rise. Do not remove the master cylinder reservoir cap during the pressure relief process.

4. Wait approximately 3 minutes for the HPA pressure relief to occur.
5. Disable the high voltage system. Refer to High Voltage Disabling .
6. Remove the bolt and position aside the engine wiring junction block.
7. Remove the front suspension strut housing brace. Refer to Front Suspension Strut Housing Brace Replacement .
8. Remove the brake fluid from the master cylinder reservoir and discard into an approved container.
9. Disconnect the brake fluid level indicator electrical connector.
10. Remove the brake master cylinder reservoir supply and return hoses. Refer to Brake Master Cylinder Reservoir Hose Replacement .

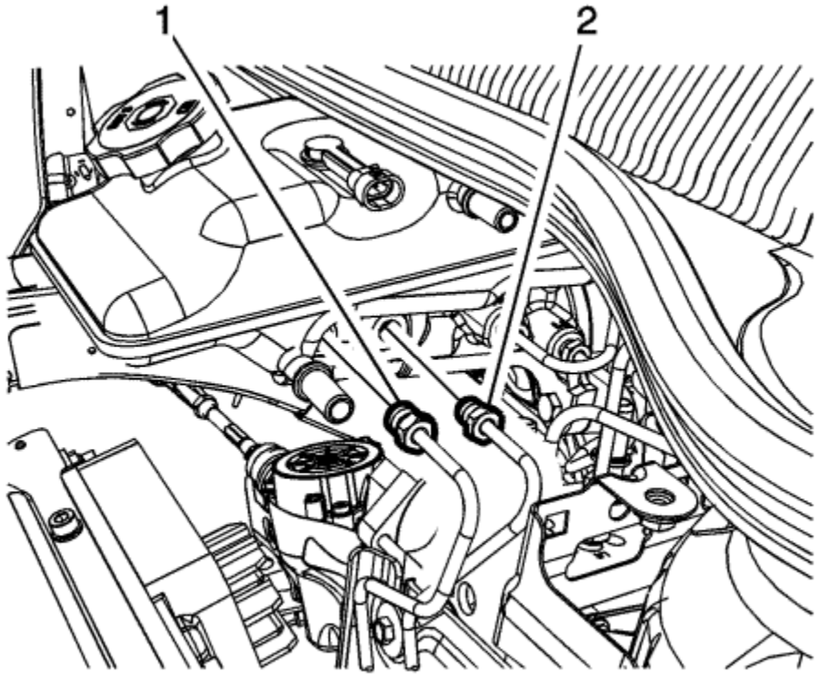

11. Remove the left front brake pipe (1) and the right front brake pipe (2) from the master cylinder.
12. Cap the brake pipe fittings and plug the master cylinder outlet ports to prevent brake fluid loss and contamination.

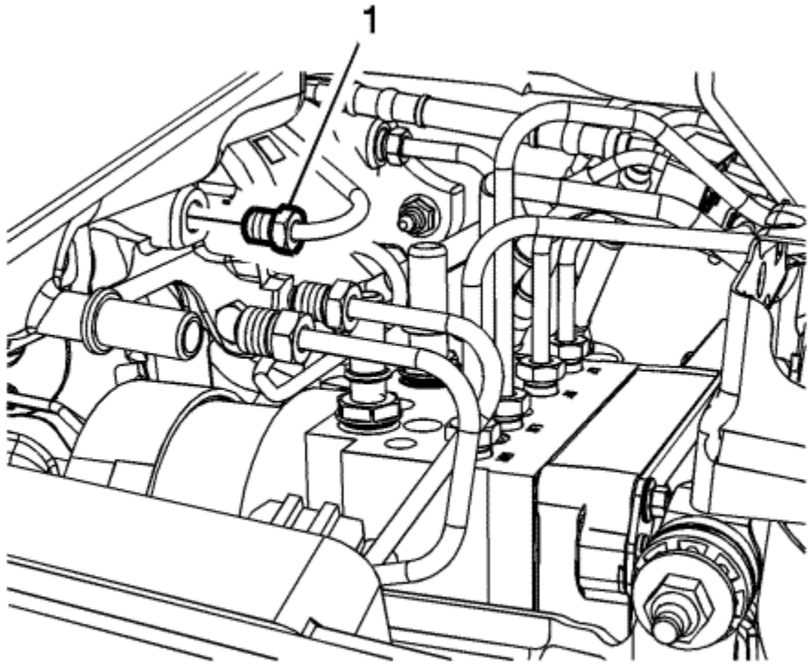

13. Remove the left front secondary brake pipe (1) from the master cylinder.
14. Cap the brake pipe fitting and plug the master cylinder outlet port to prevent brake fluid loss and contamination.

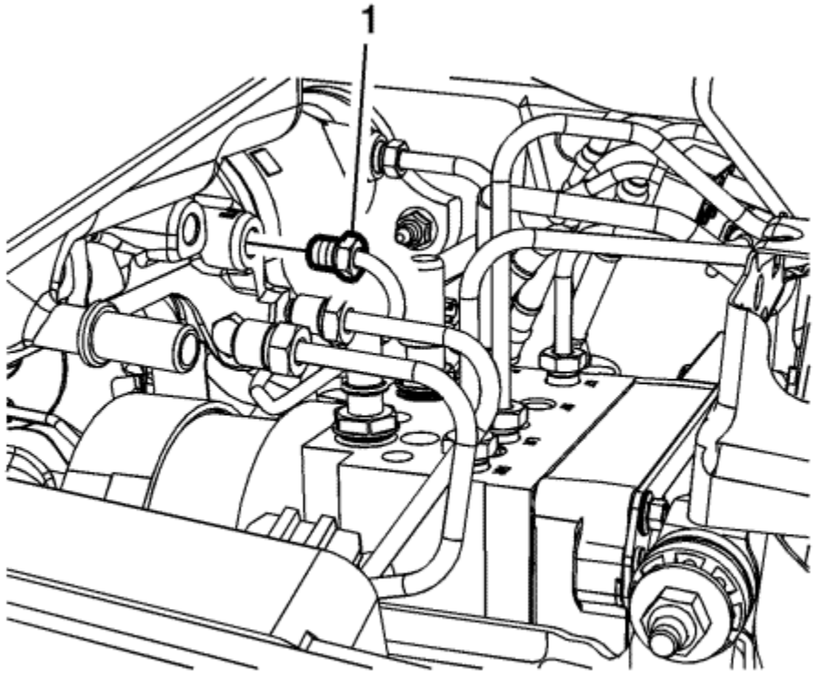

15. Remove the right front secondary brake pipe (1) from the master cylinder.
16. Cap the brake pipe fitting and plug the master cylinder outlet port to prevent brake fluid loss and contamination.

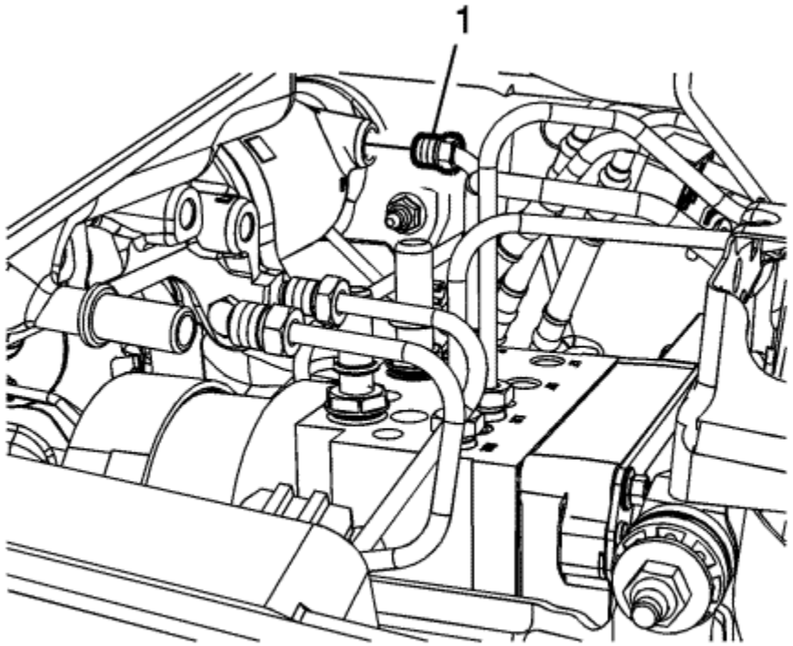

17. Remove the master cylinder primary brake pipe (1) from the master cylinder.
18. Cap the brake pipe fitting and plug the master cylinder outlet port to prevent brake fluid loss and contamination.

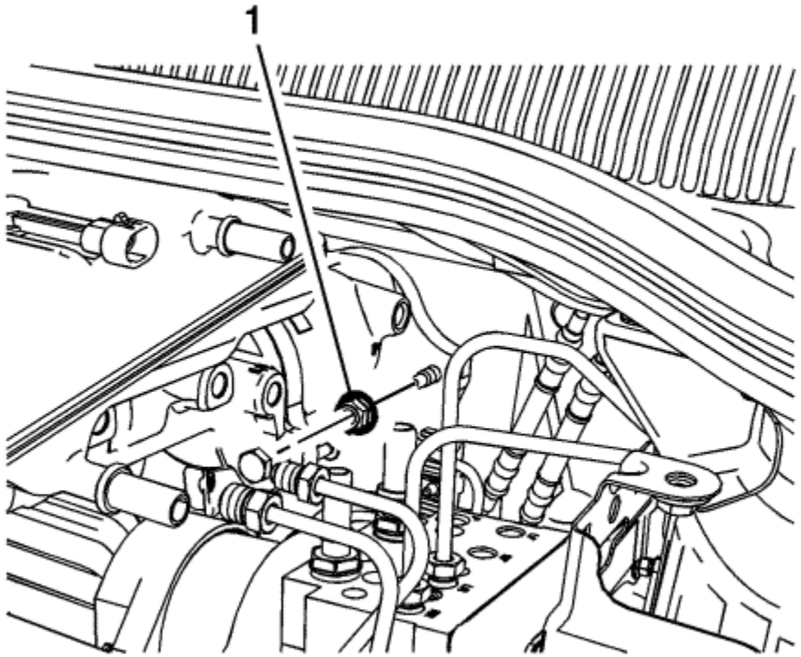

Note: Do not reuse the master cylinder nuts.

19. Remove and discard the 2 master cylinder nuts (1).
20. Remove the brake master cylinder.

Installation Procedure

1. Bench bleed the brake master cylinder. Refer to Master Cylinder Bench Bleeding .
2. Install the brake master cylinder to the vehicle.

Caution: Refer to Fastener Caution in the Preface section.

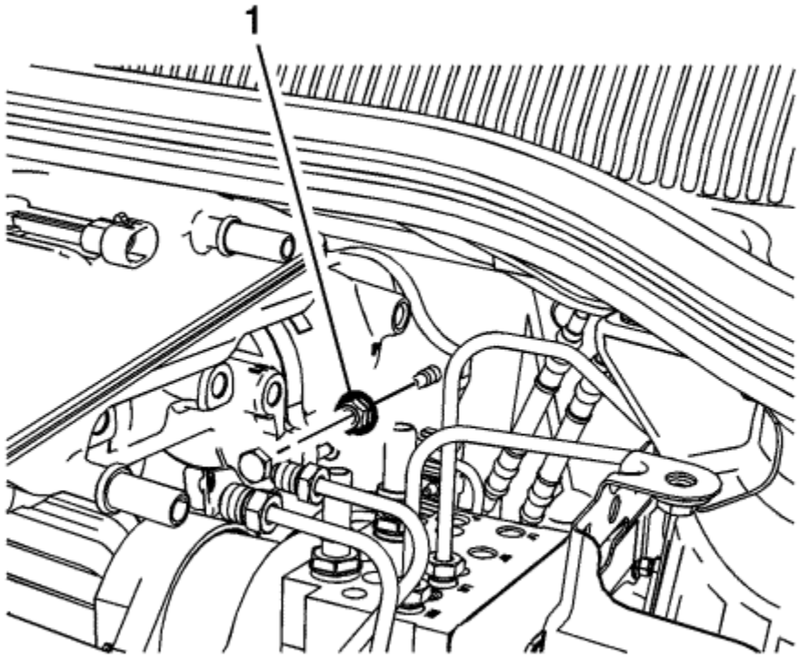

Note: Install new master cylinder nuts.

3. Install 2 new master cylinder nuts (1) and tighten to **22 N·m (16 lb ft)**.

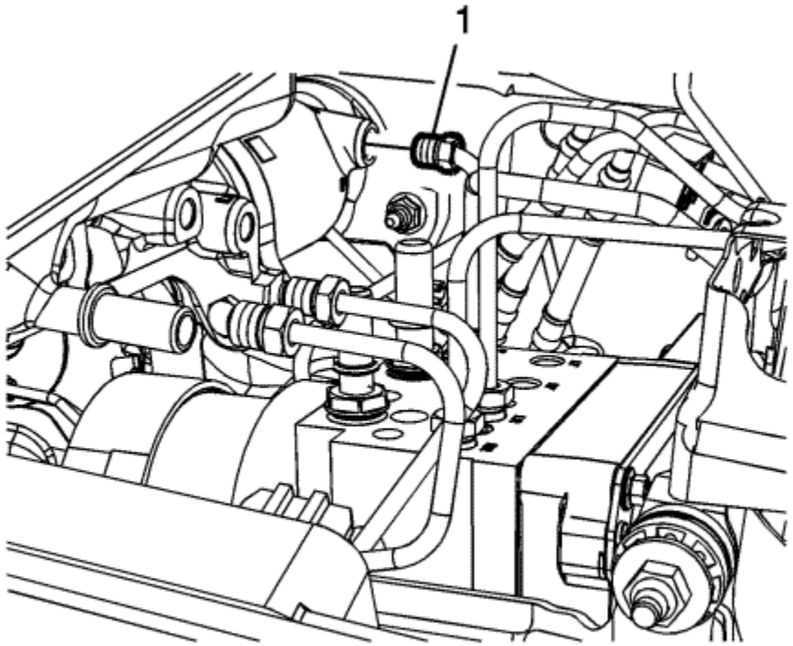

4. Install the master cylinder primary brake pipe (1) and tighten the fitting to **23 N·m (17 lb ft)**.

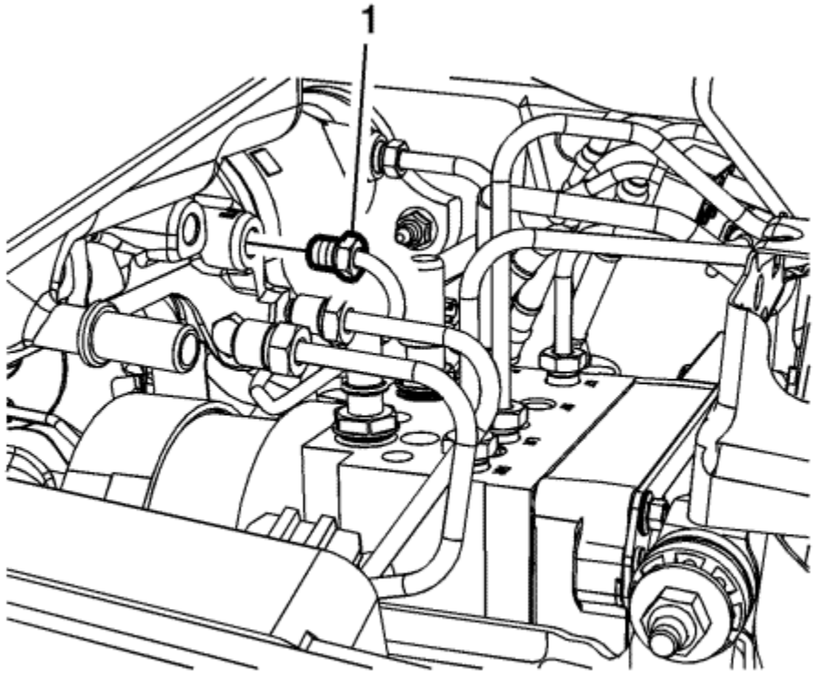

5. Install the right front secondary brake pipe (1) and tighten the fitting to **23 N·m (17 lb ft)**.

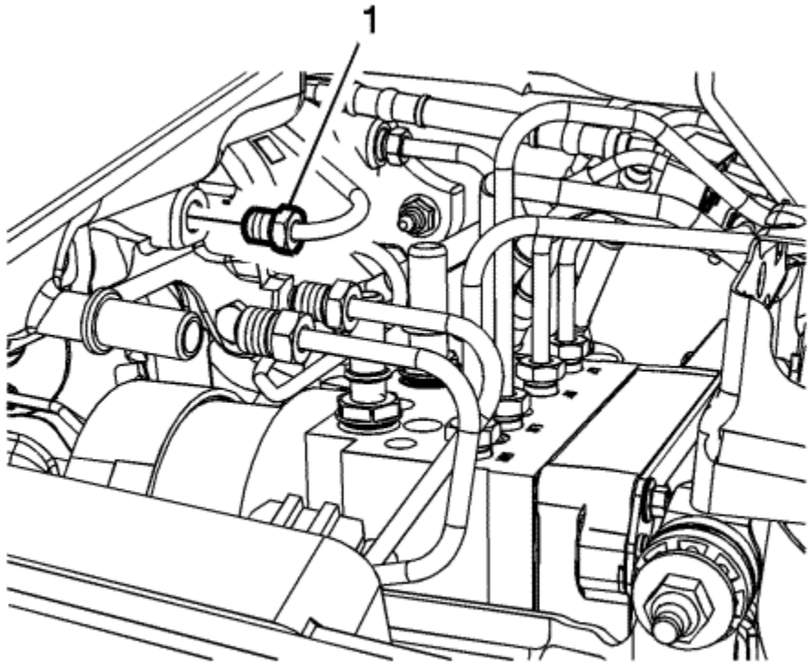

6. Install the left front secondary brake pipe (1) and tighten the fitting to **23 N·m (17 lb ft)**.

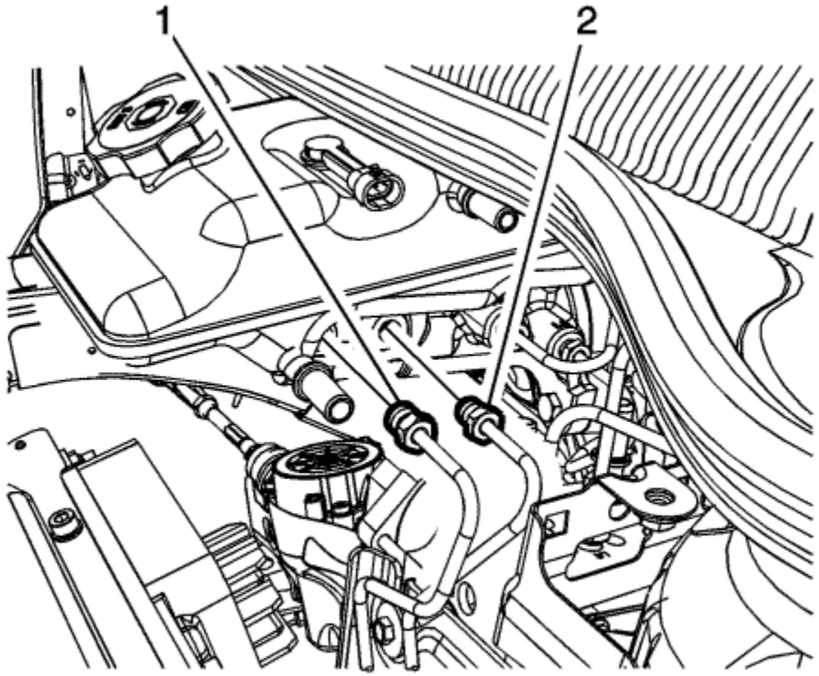

7. Install the left front brake pipe (1) and the right front brake pipe (2) and tighten the fittings to **23 N·m (17 lb ft)**.
8. Install the brake master cylinder reservoir supply and return hoses. Refer to Brake Master Cylinder Reservoir Hose Replacement .
9. Connect the brake fluid level indicator electrical connector.
10. Install the front suspension strut housing brace. Refer to Front Suspension Strut Housing Brace Replacement .
11. Install the engine wiring junction block and bolt.
12. Enable the high voltage system. Refer to High Voltage Enabling .
13. Fill the master cylinder reservoir. Refer to Master Cylinder Reservoir Filling .
14. Bleed the hydraulic brake system. Refer to Hydraulic Brake System Bleeding : Pressure .

© Copyright Chevrolet. All rights reserved

Master Cylinder Bench Bleeding

Warning: Refer to Brake Fluid Irritant Warning in the Preface section.

Caution: Refer to Brake Fluid Effects on Paint and Electrical Components Caution in the Preface section.

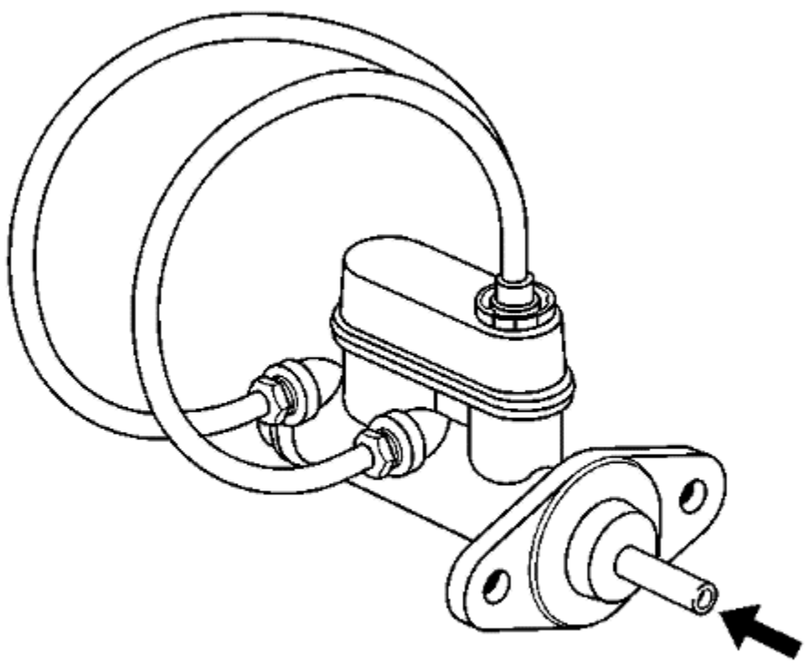

1. Secure the mounting flange of the brake master cylinder in a bench vice so that the rear of the primary piston is accessible.
2. Remove the master cylinder reservoir cap and diaphragm.
3. Install suitable fittings to the master cylinder ports that match the type of flare seat required and also provide for hose attachment.

4. Install transparent hoses to the fittings installed to the master cylinder ports, then route the hoses into the master cylinder reservoir.
5. Fill the master cylinder reservoir to at least the half-way point with GM approved brake fluid from a clean, sealed brake fluid container. Refer to Master Cylinder Reservoir Filling .
6. Ensure that the ends of the transparent hoses running into the master cylinder reservoir are fully submerged in the brake fluid.
7. Using a smooth, round-ended tool, depress and release the primary piston as far as it will travel, a depth of about 25 mm (1 in), several times. Observe the flow of fluid coming from the ports.

   As air is bled from the primary and secondary pistons, the effort required to depress the primary piston will increase and the amount of travel will decrease.

8. Continue to depress and release the primary piston until fluid flows freely from the ports with no evidence of air bubbles.
9. Remove the transparent hoses from the master cylinder reservoir.
10. Install the master cylinder reservoir cap and diaphragm.
11. Remove the fittings with the transparent hoses from the master cylinder ports. Wrap the master cylinder with a clean workshop cloth to prevent brake fluid spills.
12. Remove the master cylinder from the vice.

© Copyright Chevrolet. All rights reserved

Brake Fluid Level Indicator Switch Replacement

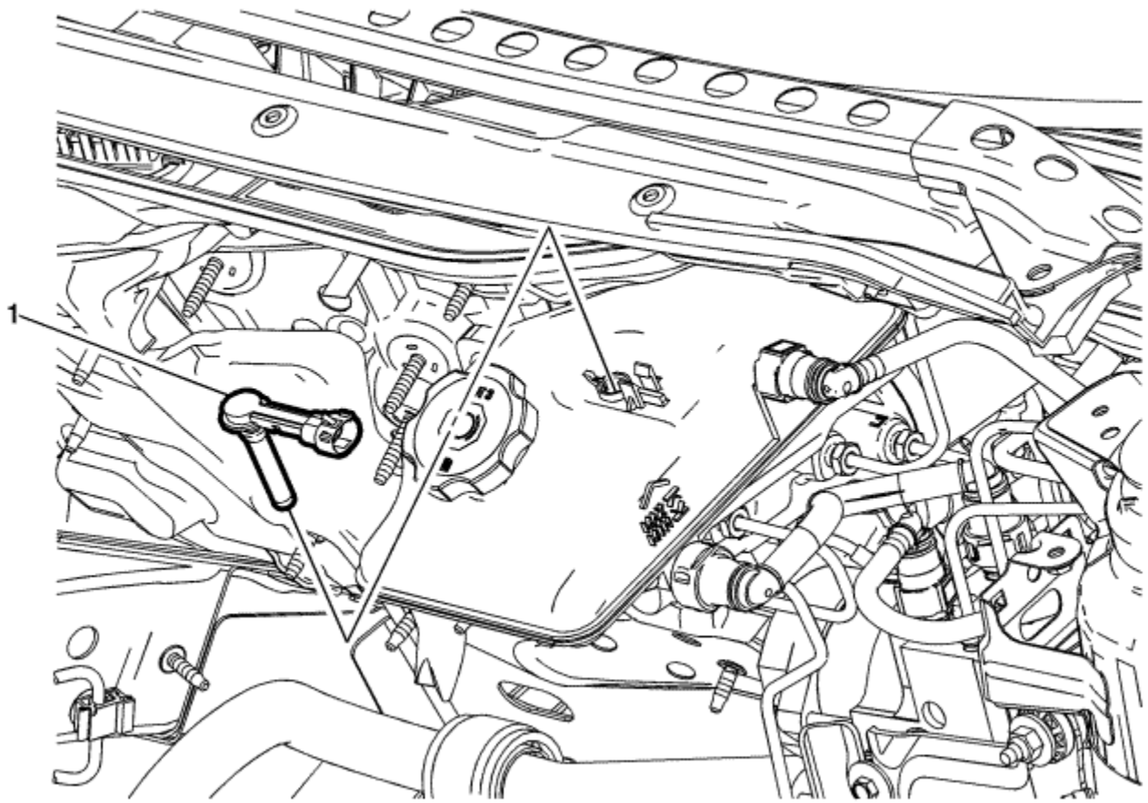

Callout	Component Name
Warning: Refer to Brake Fluid Irritant Warning in the Preface section. **Caution:** Refer to Brake Fluid Effects on Paint and Electrical Components Caution in the Preface section. **Preliminary Procedure**	

1. Remove the air inlet grille panel. Refer to Air Inlet Grille Panel Replacement .
2. Loosen, but do not remove, the right side front suspension strut housing brace bolts.
3. Remove the left side front suspension strut housing brace bolts and gently lift the brace upward.

1	Brake Fluid Level Indicator Switch **Procedure** 1. Disconnect the electrical connector. 2. Carefully spread the locking tabs and lift the brake fluid level indicator switch upward. 3. After the installation is complete, install the front suspension strut housing brace bolts. Refer to Front Suspension Strut Housing Brace Replacement .

© Copyright Chevrolet. All rights reserved

Brake Pedal Assembly Replacement

Removal Procedure

1. Remove the air cleaner resonator outlet duct. Refer to Air Cleaner Resonator Outlet Duct Replacement .
2. Remove the front suspension strut housing brace. Refer to Front Suspension Strut Housing Brace Replacement .
3. Remove the bolt and position aside the engine wiring junction block.

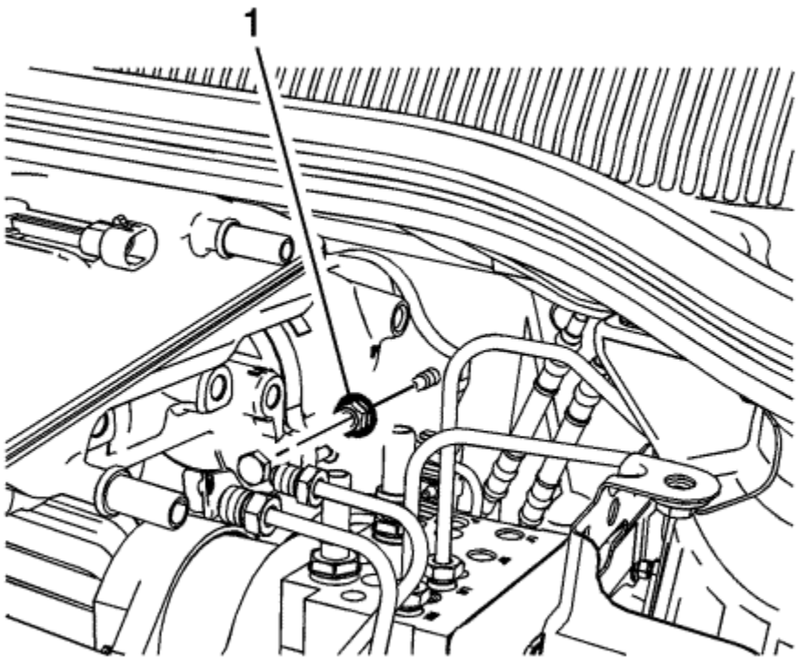

Note: Do not reuse the master cylinder nuts.

4. Remove and discard the 2 master cylinder nuts (1).

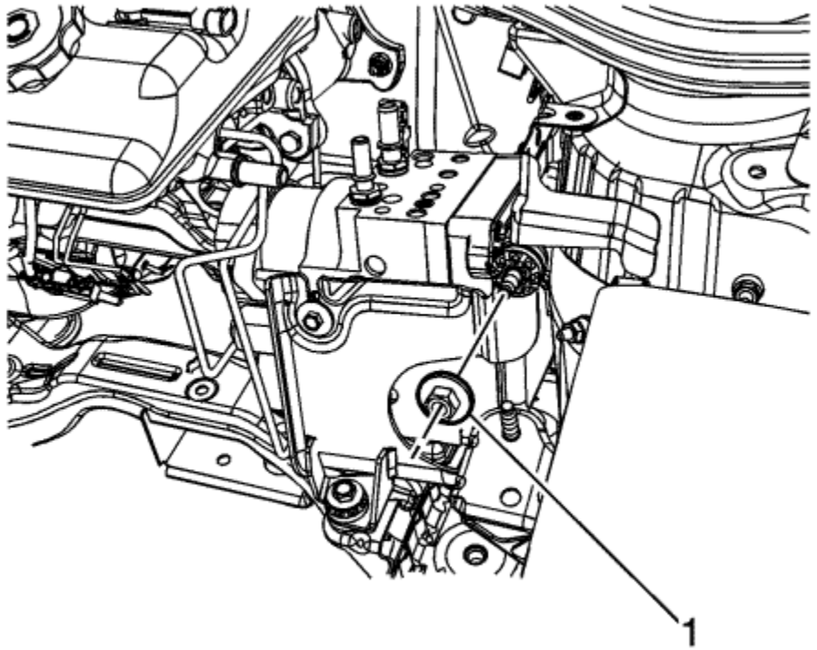

5. Remove the brake pressure modulator valve (BPMV) bracket nut (1).

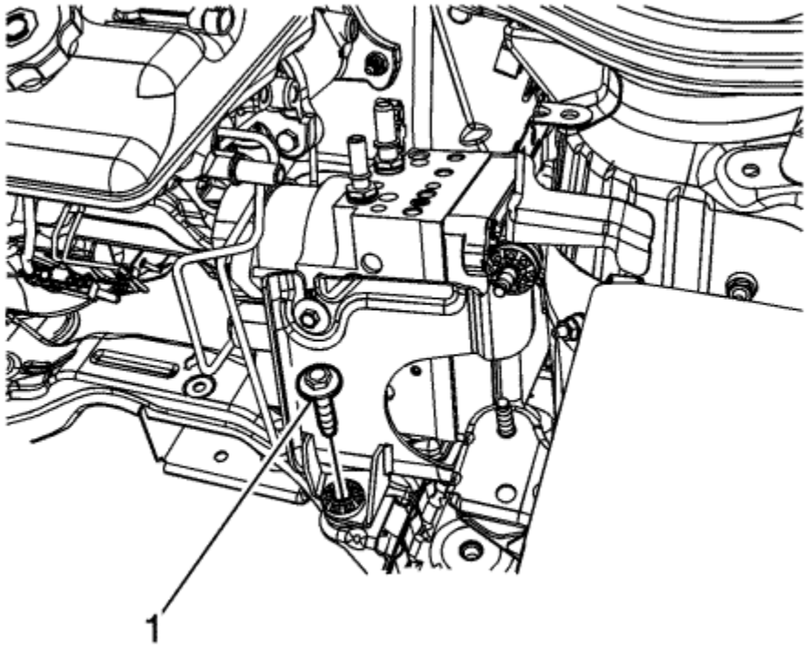

6. Remove the BPMV bracket bolt (1).

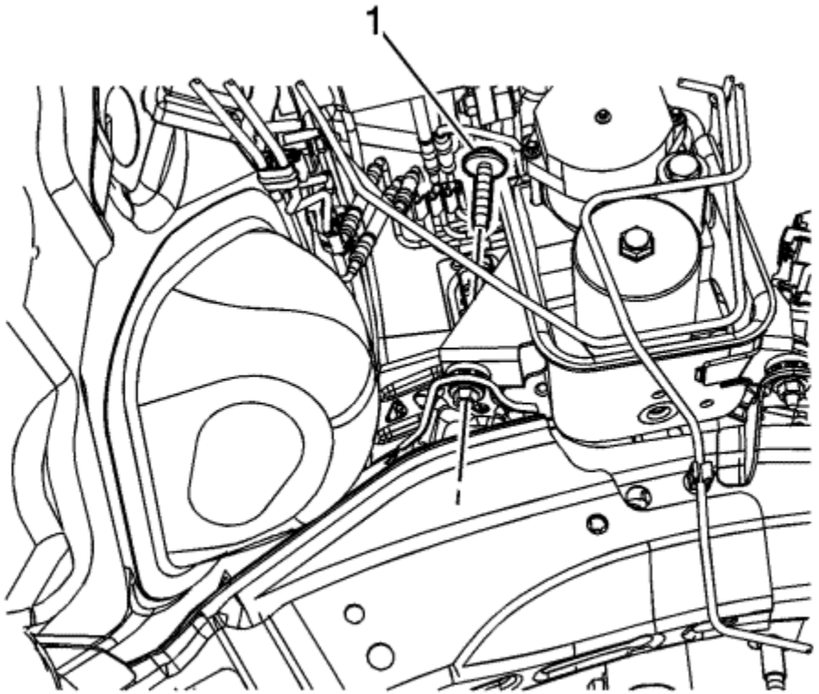

7. Remove the BPMV bracket bolt (1).

   Note: Do not bend the brake pipes.

8. Carefully remove and position aside the master cylinder and the BPMV and bracket assembly. Support the components with heavy mechanics wire or equivalent.

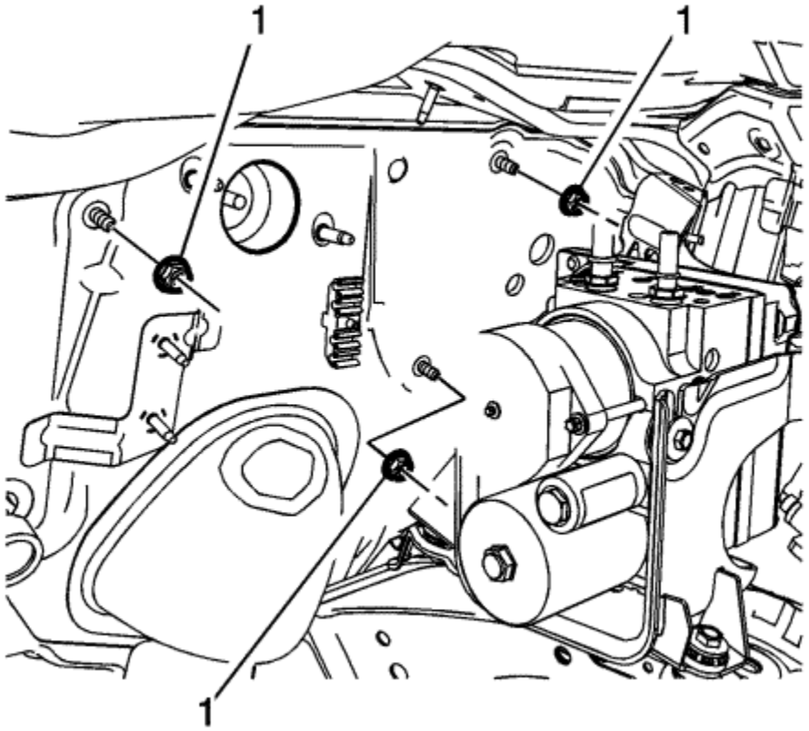

9. Remove the brake pedal assembly nuts (1).
10. Remove the front floor console. Refer to Front Floor Console Replacement .
11. Remove the left side floor front air outlet duct. Refer to Floor Front Air Outlet Duct Replacement - Left Side .
12. Remove the steering column. Refer to Steering Column Replacement .
13. Remove the accelerator pedal position sensor. Refer to Accelerator Pedal Position Sensor Replacement .
14. Disconnect the brake pedal position sensor electrical connector.
15. Disconnect the electronic brake pedal travel sensor electrical connector.

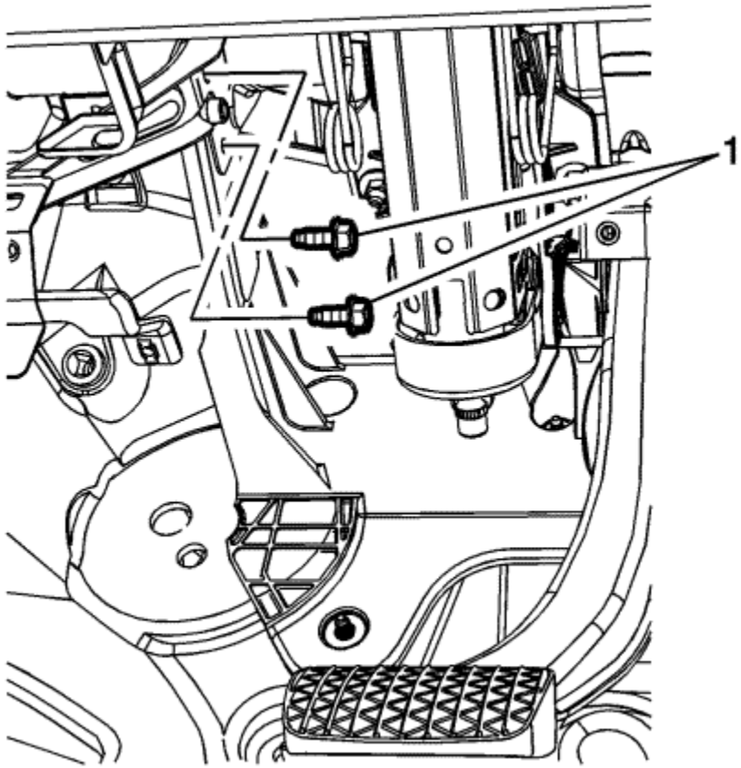

16. Remove the left upper brake pedal assembly bolts (1).

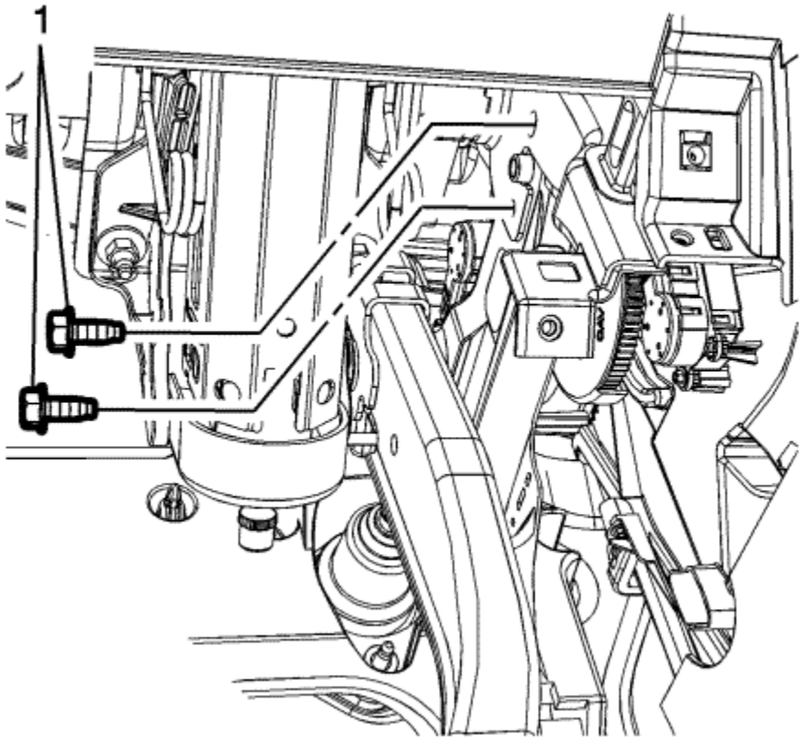

17. Remove the right upper brake pedal assembly bolts (1).
18. Without removing the instrument panel tie bar assembly, remove the fasteners retaining the tie bar assembly to the vehicle. Refer to Instrument Panel Tie Bar Replacement .
19. With the aid of an assistant, pull the instrument panel and tie bar assembly rearward and upward approximately 25 mm (1 in) and remove the brake pedal assembly.

Installation Procedure

1. With the aid of an assistant, pull the instrument panel and tie bar assembly rearward and upward approximately 25 mm (1 in) and install the brake pedal assembly.
2. Install the fasteners retaining the tie bar assembly to the vehicle. Refer to Instrument Panel Tie Bar Replacement .

   Caution: Refer to Fastener Caution in the Preface section.

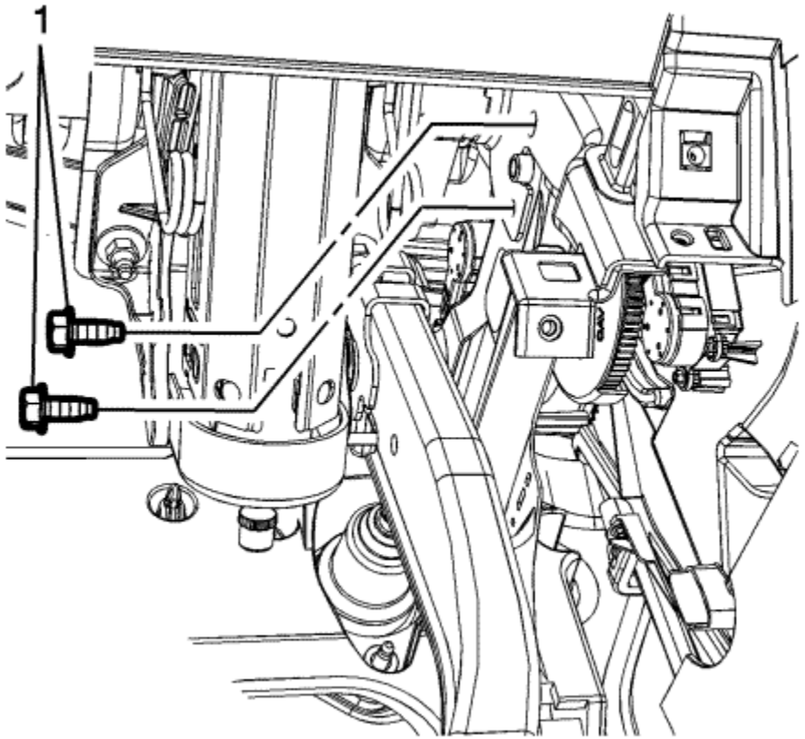

3. Install the right upper brake pedal assembly bolts (1) and tighten to **12 N·m (106 lb in)**.

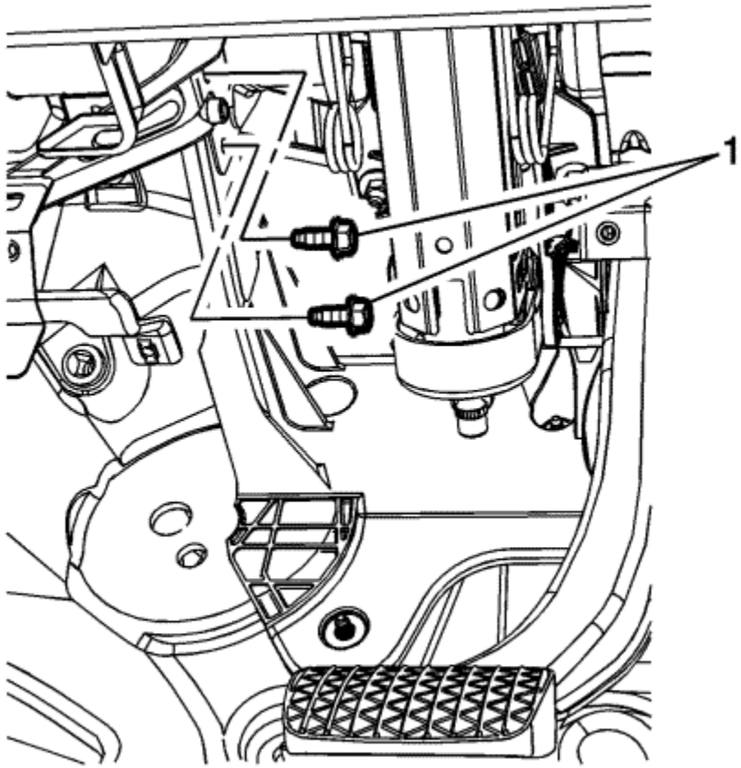

4. Install the left upper brake pedal assembly bolts (1) and tighten to **12 N·m (106 lb in)**.
5. Connect the brake pedal position sensor electrical connector.
6. Connect the electronic brake pedal travel sensor electrical connector.
7. Install the accelerator pedal position sensor. Refer to Accelerator Pedal Position Sensor Replacement .
8. Install the steering column. Refer to Steering Column Replacement .
9. Install the left side floor front air outlet duct. Refer to Floor Front Air Outlet Duct Replacement - Left Side .
10. Install the front floor console. Refer to Front Floor Console Replacement .

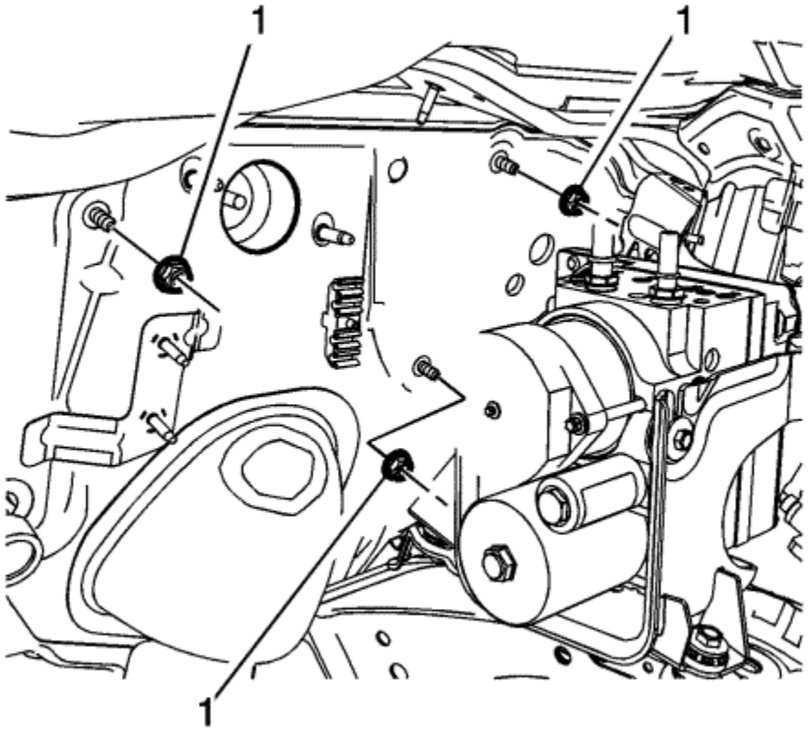

11. Install the brake pedal assembly nuts (1) and tighten to **23 N·m (17 lb ft)**.
12. Apply silicone brake lubricant to the brake master cylinder pushrod tip.

    Note: Do not bend the brake pipes.

13. Carefully reposition the master cylinder and the BPMV and bracket assembly to the vehicle.

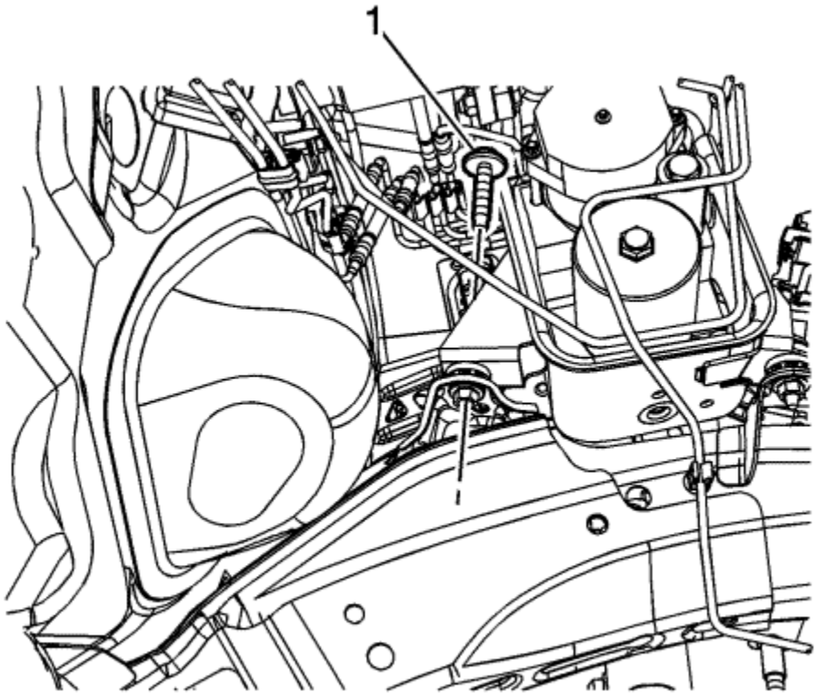

14. Install the BPMV bracket bolt (1) and tighten to **22 N·m (16 lb ft)**.

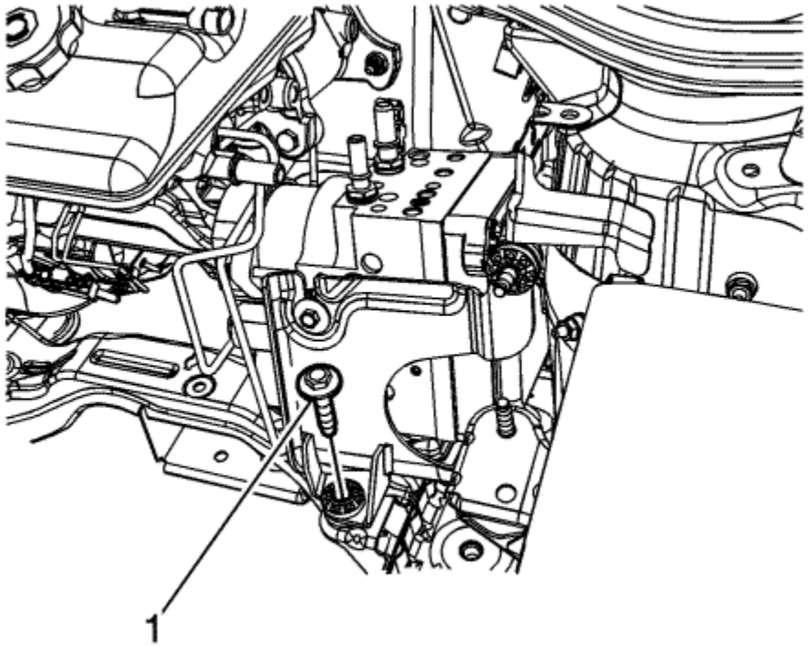

15. Install the BPMV bracket bolt (1) and tighten to **22 N·m (16 lb ft)**.

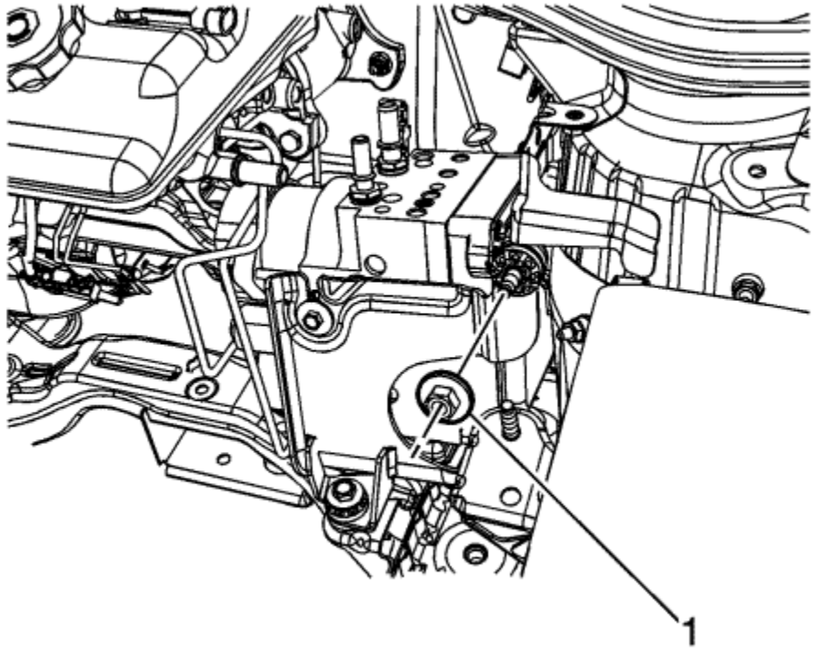

16. Install the BPMV bracket nut (1) and tighten to **22 N·m (16 lb ft)**.

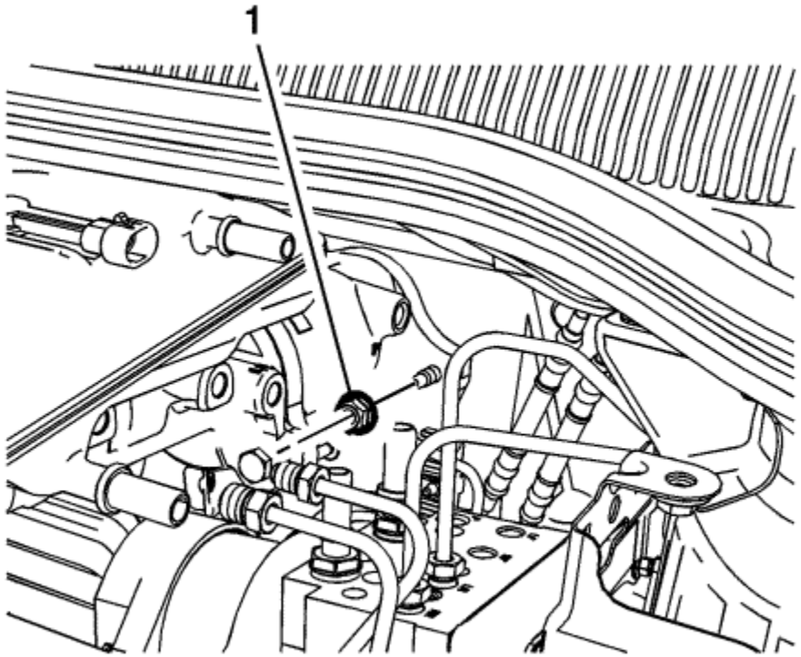

Note: Install new master cylinder nuts.

17. Install 2 new master cylinder nuts (1) and tighten to **22 N·m (16 lb ft)**.
18. Install the engine wiring junction block and bolt.
19. Install the front suspension strut housing brace. Refer to Front Suspension Strut Housing Brace Replacement .
20. Install the air cleaner resonator outlet duct. Refer to Air Cleaner Resonator Outlet Duct Replacement .
21. Calibrate the brake pedal position sensor. Refer to Brake Pedal Position Sensor Calibration .

© Copyright Chevrolet. All rights reserved

Brake Pipe Replacement

Special Tools

CH-45405 Brake Pipe Flaring Kit

For equivalent regional tools, refer to Special Tools .

Warning: Refer to Brake Fluid Irritant Warning in the Preface section.

Caution: Refer to Brake Fluid Effects on Paint and Electrical Components Caution in the Preface section.

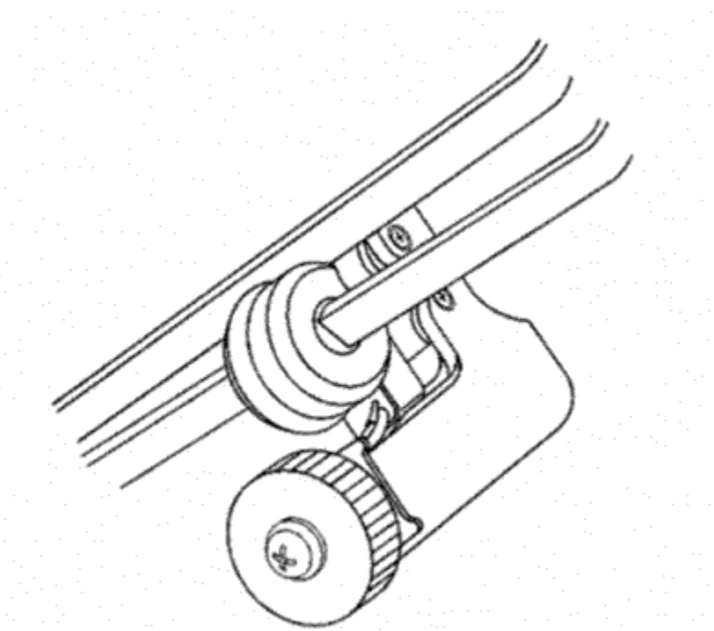

Warning: Always use double walled steel brake pipe when replacing brake pipes. The use of any other pipe is not recommended and may cause brake system failure. Carefully route and retain replacement brake pipes. Always use the correct fasteners and the original location for replacement brake pipes. Failure to properly route and

retain brake pipes may cause damage to the brake pipes and cause brake system failure.

Note: When servicing the brake pipes, note the following:

- If sectioning the brake pipe, use replacement pipe of the same type and outside diameter.
- Use fittings of the appropriate size and type.
- Only create flares of the same type or design as originally equipped on the vehicle.

1. Inspect the area of brake pipe to be repaired or replaced.
2. Release the brake pipe to be replaced from the retainers, as required.
3. Select an appropriate location to section the brake pipe, if necessary.
   - Allow adequate clearance in order to manoeuvre the *CH-45405* Brake Pipe Flaring Kit .
   - Avoid sectioning the brake pipe at bends or mounting points.
4. Using a string or wire, measure the length of the pipe to be replaced including all pipe bends.
5. Add to the measurement taken the appropriate additional length required for each flare to be created.

Specification

- 6.35 mm (0.250 in) for 4.76 mm (3/16 in) diameter pipe
- 9.50 mm (0.374 in) for 6.35 mm (1/4 in) diameter pipe
- 12.67 mm (0.499 in) for 7.94 mm (5/16 in) diameter pipe

Note: Ensure that the brake pipe end to be flared is cut at a square, 90 degree angle to the pipe length.

6. Using the pipe cutter included in the *CH-45405* Brake Pipe Flaring Kit , carefully cut the brake pipe squarely to the measured length.
7. Remove the sectioned brake pipe from the vehicle.
8. Select the appropriate size of brake pipe and tube nuts, as necessary. The brake pipe outside diameter determines brake pipe size.

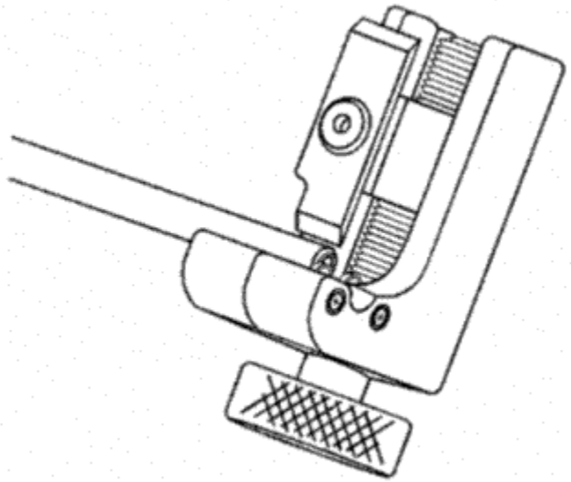

9. Strip the nylon coating from the brake pipe end to be flared, if necessary.
   - Select the appropriate blade on the coating stripping tool included in the *CH-45405* Brake Pipe Flaring Kit , by unthreading the blade block from the stripping tool and installing the block with the desired blade facing the tool rollers.

   Specification

   - 6.35 mm (0.250 in) blade for 4.76 mm (3/16 in) diameter pipe
   - 9.50 mm (0.374 in) blade for 6.35 mm (1/4 in) and 7.94 mm (5/16 in) diameter pipe

   - Insert the brake pipe end to be flared into the stripping tool to the depth of the ledge on the tool rollers.
   - While holding the brake pipe firmly against the stripping tool roller ledges, rotate the thumbwheel of the tool until the blade contacts the brake pipe coated surface.

     Note: Do not gouge the metal surface of the brake pipe.

   - Rotate the stripping tool in a clockwise direction, ensuring that the brake pipe end remains against the tool roller ledges.
   - After each successive revolution of the stripping tool, carefully rotate the thumbwheel of the tool clockwise, in order to continue stripping the coating from the brake pipe until the metal pipe surface is exposed.
   - Loosen the thumbwheel of the tool and remove the brake pipe.

     Note: Ensure that all loose remnants of the nylon coating have been removed from the brake pipe.

- Inspect the stripped end of the brake pipe to ensure that the proper amount of coating has been removed.

Specification

- 6.35 mm (0.250 in) for 4.76 mm (3/16 in) diameter pipe
- 9.50 mm (0.374 in) for 6.35 mm (1/4 in) and 7.94 mm (5/16 in) diameter pipe

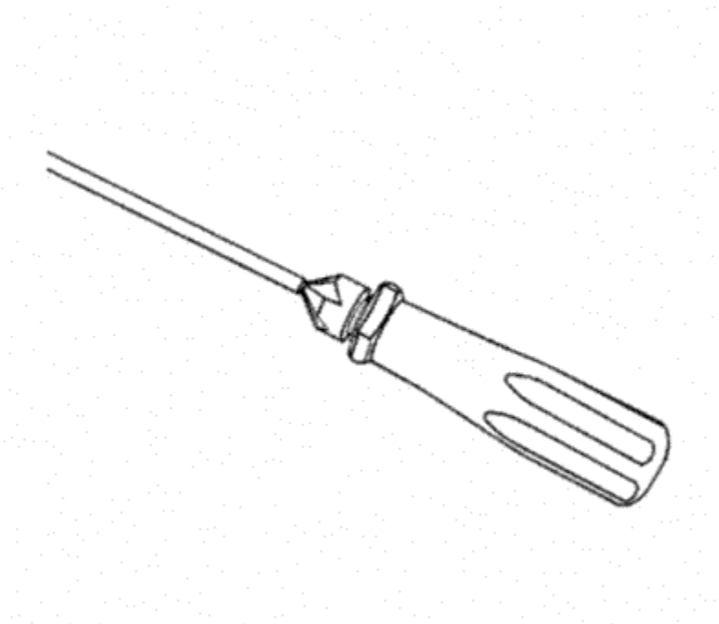

10. Chamfer the inside and outside diameter of the pipe with the de-burring tool included in the *CH-45405* Brake Pipe Flaring Kit .
11. Install the tube nuts on the brake pipe, noting their orientation.
12. Clean the brake pipe and the *CH-45405* Brake Pipe Flaring Kit of lubricant, contaminants, and debris.

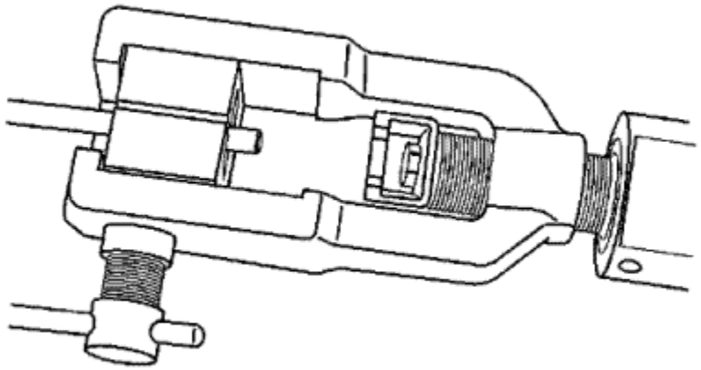

13. Loosen the die clamping screw of the*CH-45405* Brake Pipe Flaring Kit .
14. Select the corresponding die set and install the die halves into the die cage with the full, flat face of one die facing the clamping screw, and the counterbores of both dies facing the forming ram.

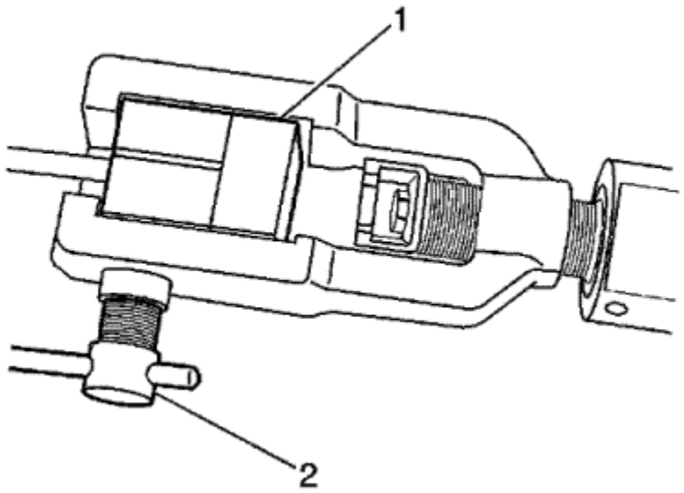

15. Place the flat face of an unused die (1) against the die halves in the clamping cage and hold firmly against the counterbored face of the dies.
16. Insert the prepared end of the pipe to be flared through the back of the dies until the pipe is seated against the flat surface of the unused die (1).
17. Remove the unused die (1).
18. Ensure that the rear of both dies are seated firmly against the enclosed end of the die cage.
19. Firmly hand tighten the clamping screw (2) against the dies.

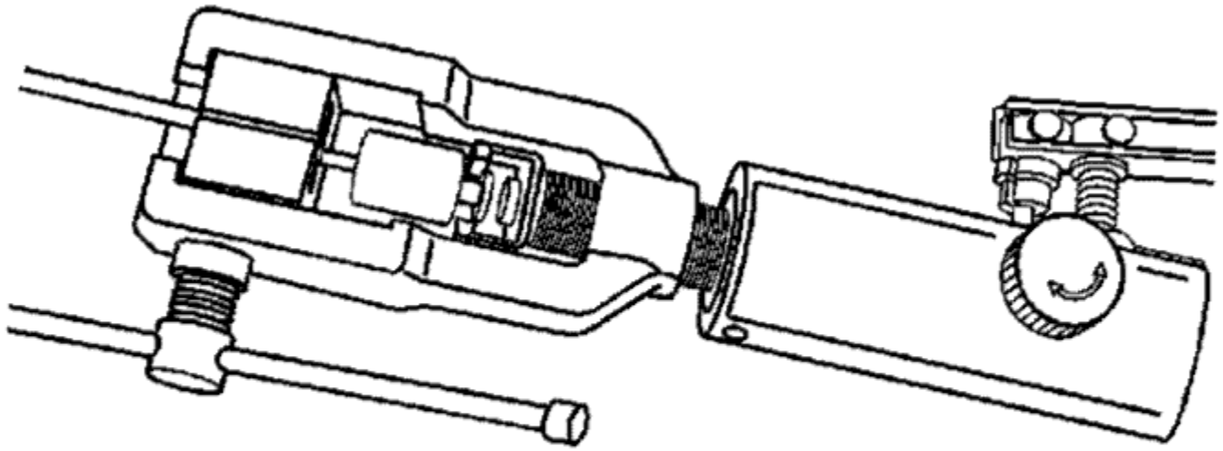

20. Select the appropriate forming mandrel and place into the forming ram.
21. Rotate the hydraulic fluid control valve clockwise to the closed position.
22. Rotate the body of the *CH-45405* Brake Pipe Flaring Kit until it bottoms against the die cage.

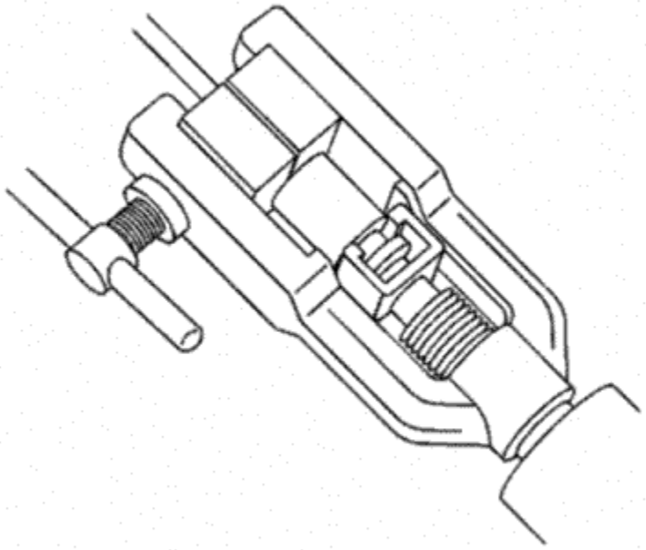

23. While guiding the forming mandrel into the exposed end of pipe to be flared, operate the lever of the *CH-45405* Brake Pipe Flaring Kit until the forming mandrel bottoms against the clamping dies.
24. Rotate the hydraulic fluid control valve anticlockwise to the open position to allow the hydraulic forming ram to retract.

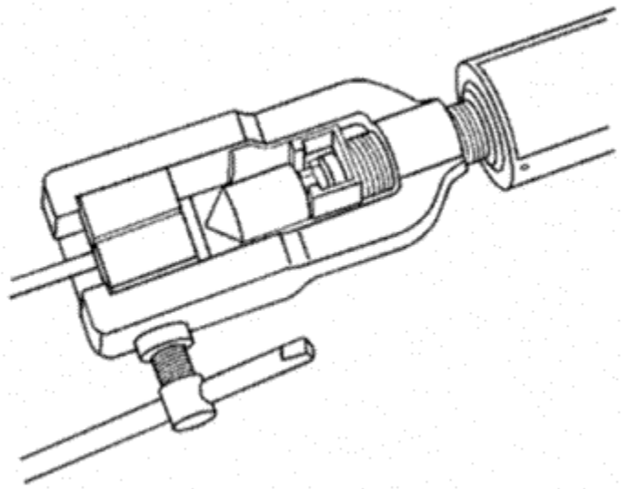

25. Insert the finishing cone into the forming ram.
26. Rotate the hydraulic fluid control valve clockwise to the closed position.
27. Rotate the body of the *CH-45405* Brake Pipe Flaring Kit until it bottoms against the die cage.
28. While guiding the finishing cone into the exposed end of pipe to be flared, operate the lever of the *CH-45405* Brake Pipe Flaring Kit until the finishing cone bottoms against the dies.
29. Rotate the hydraulic fluid control valve anticlockwise to the open position to allow the hydraulic forming ram to retract.
30. Loosen the die clamping screw and remove the dies and pipe.
31. If necessary, lightly tap the dies until the die halves separate.

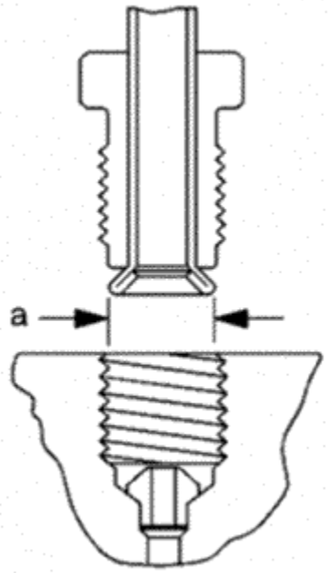

32. Inspect the brake pipe flare for correct shape and diameter (a).

    Specification

    - 6.74-7.10 mm (0.265-0.279 in) flare diameter for 4.76 mm (3/16 in) diameter pipe
    - 8.57-9.27 mm (0.344-0.358 in) flare diameter for 6.35 mm (1/4 in) diameter pipe
    - 10.42-10.79 mm (0.410-0.425 in) flare diameter for7.94 mm (5/16 in) diameter pipe

33. If necessary, using the removed section of brake pipe as a template, shape the new pipe with a suitable brake pipe bending tool.

    Note: When installing the pipe, maintain a clearance of 19 mm (3/4 in) from all moving or vibrating components.

34. Install the pipe to the vehicle with the appropriate brake pipe unions, as required.
35. If previously released, secure the brake pipe to the retainers.
36. Bleed the hydraulic brake system. Refer to Hydraulic Brake System Bleeding : Pressure .
37. With the aid of an assistant, inspect the brake pipe flares for leaks by starting the engine and applying the brakes.

&#169© Copyright Chevrolet. All rights reserved

Brake Master Cylinder Reservoir Hose Replacement

Removal Procedure

Warning: Refer to Brake Fluid Irritant Warning in the Preface section.

Caution: Refer to Brake Fluid Effects on Paint and Electrical Components Caution in the Preface section.

Note: The transmission must be in the PARK position, the power button in the OFF position, and the brakes not applied to ensure the brake modulator and high pressure accumulator (HPA) pressure relief occurs. This process will take approximately 1 to 3 minutes.

1. Place the transmission in PARK.
2. Place the power button in the OFF position.
3. Remove the remote keyless entry (RKE) transmitter and close all of the vehicle doors.

Note: During the pressure relief process, the fluid level in the master cylinder reservoir will rise. Do not remove the master cylinder reservoir cap during the pressure relief process.

4. Wait approximately 3 minutes for the HPA pressure relief to occur.
5. Remove the bolt and position aside the engine wiring junction block.

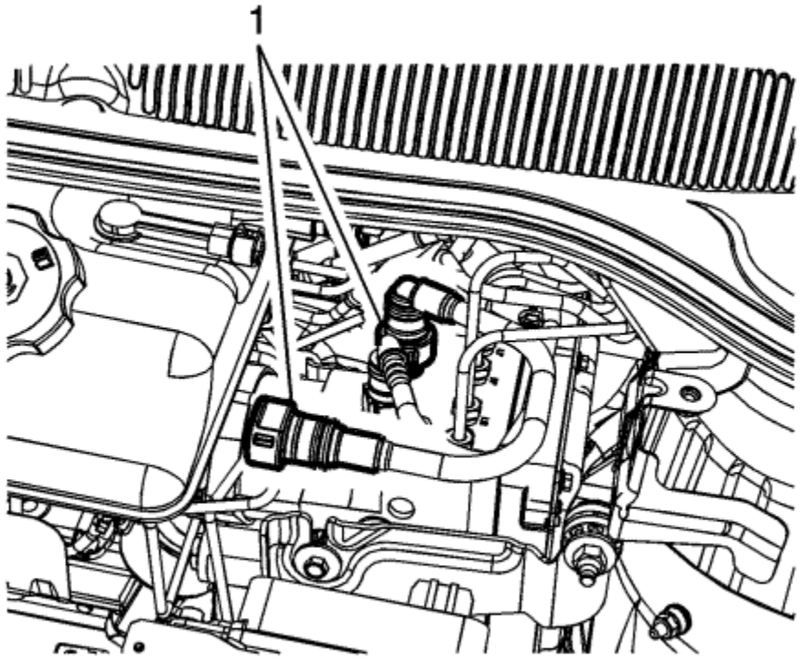

6. Disconnect the brake master cylinder reservoir supply hose quick connects (1).
7. Remove the brake master cylinder reservoir supply hose.
8. Cap the brake pressure modulator valve (BPMV) inlet port to prevent brake fluid loss and contamination.

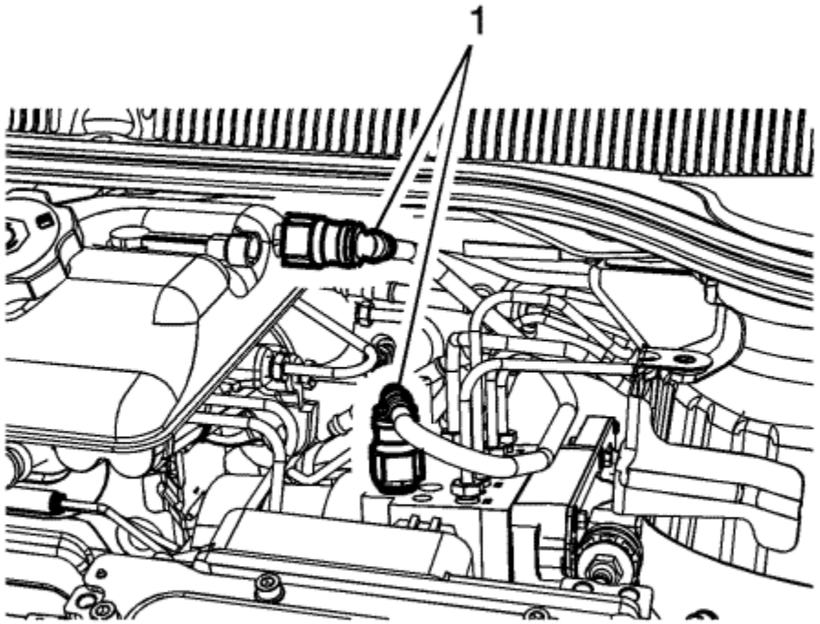

9. Disconnect the brake master cylinder reservoir return hose quick connects (1).
10. Remove the brake master cylinder reservoir return hose.
11. Cap the BPMV outlet port to prevent brake fluid loss and contamination.

Installation Procedure

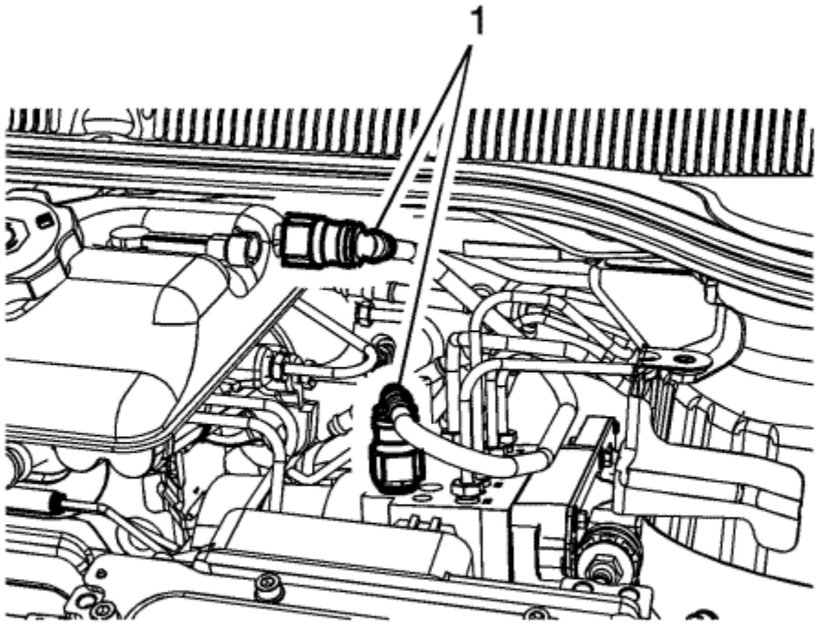

1. Install the brake master cylinder reservoir return hose.
2. Connect the brake master cylinder reservoir return hose quick connects (1).
3. Ensure the brake master cylinder reservoir return hose quick connects are fully engaged by attempting to pull the return hose from the fittings.

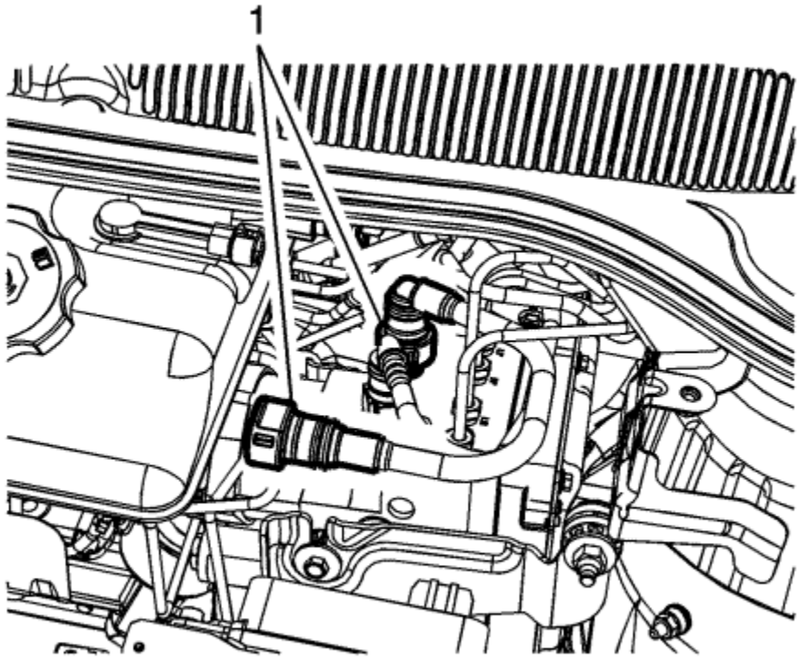

4. Install the brake master cylinder reservoir supply hose.
5. Connect the brake master cylinder reservoir supply hose quick connects (1).
6. Ensure the brake master cylinder reservoir supply hose quick connects are fully engaged by attempting to pull the supply hose from the fittings.
7. Install the engine wiring junction block and bolt.
8. Fill the brake master cylinder reservoir. Refer to Master Cylinder Reservoir Filling .

© Copyright Chevrolet. All rights reserved

Front Brake Hose Replacement

Removal Procedure

Warning: Refer to Brake Dust Warning in the Preface section.

Warning: Refer to Brake Fluid Irritant Warning in the Preface section.

Danger: Do not use a service jack in locations other than those specified to lift this vehicle. Lifting the vehicle with a jack in those other locations could cause the vehicle to slip off the jack and roll; this could cause injury or death.

1. Raise and support the vehicle. Refer to Lifting and Jacking the Vehicle .
2. Remove the tyre and wheel assembly. Refer to Tyre and Wheel Removal and Installation .

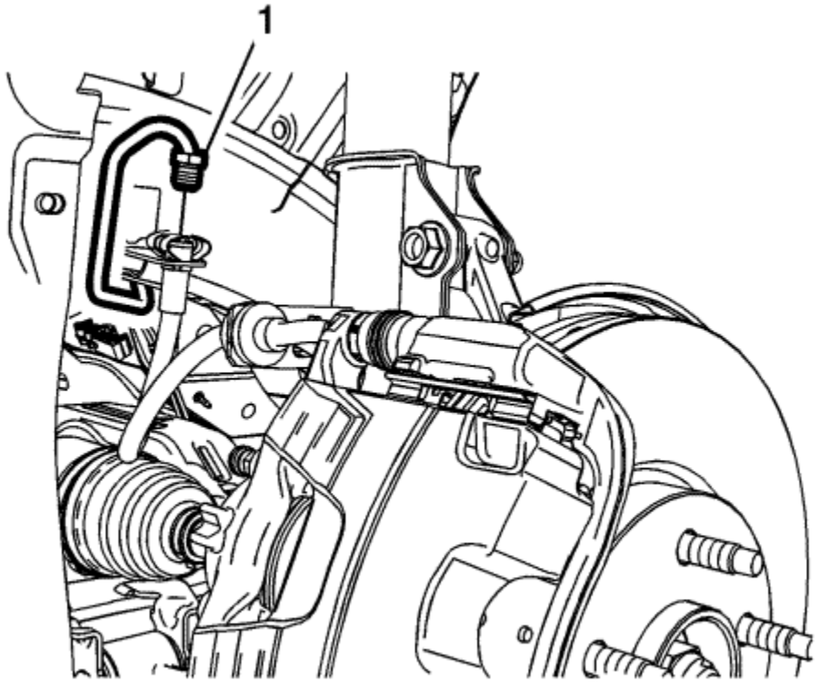

3. Remove the brake pipe fitting (1) from the front brake hose.
4. Cap the brake pipe fitting to prevent brake fluid loss and contamination.

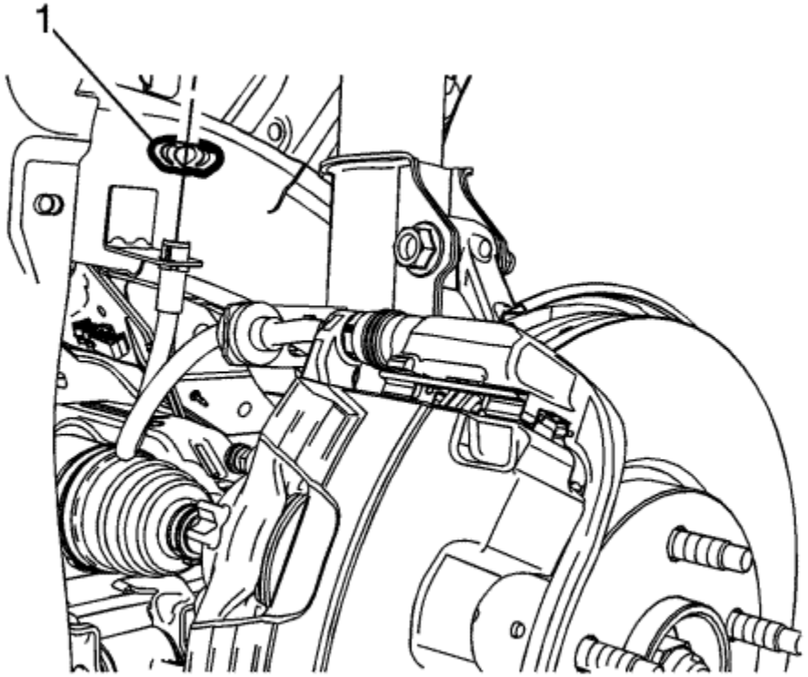

5. Remove the brake hose retainer (1).

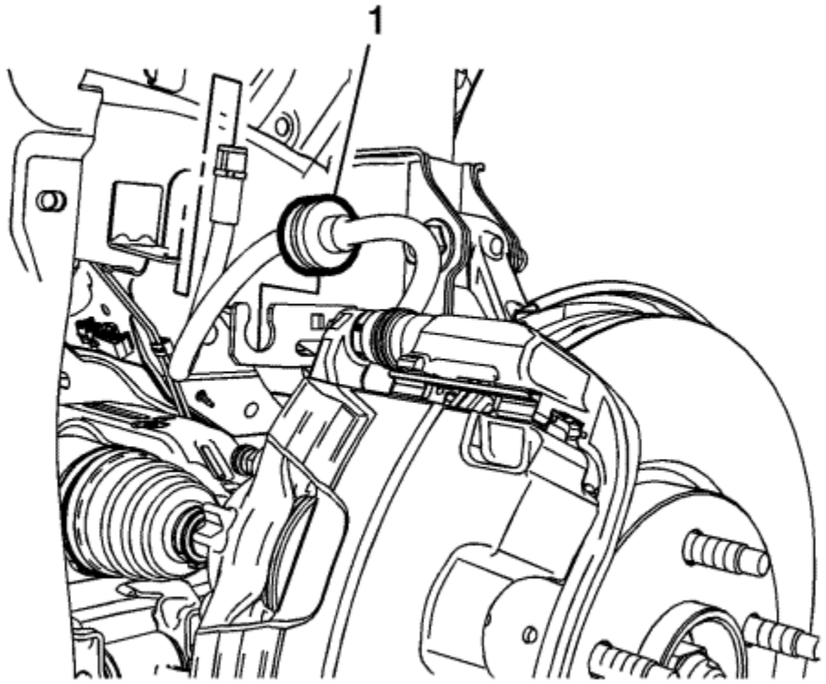

6. Release the brake hose grommet (1) from the strut bracket.

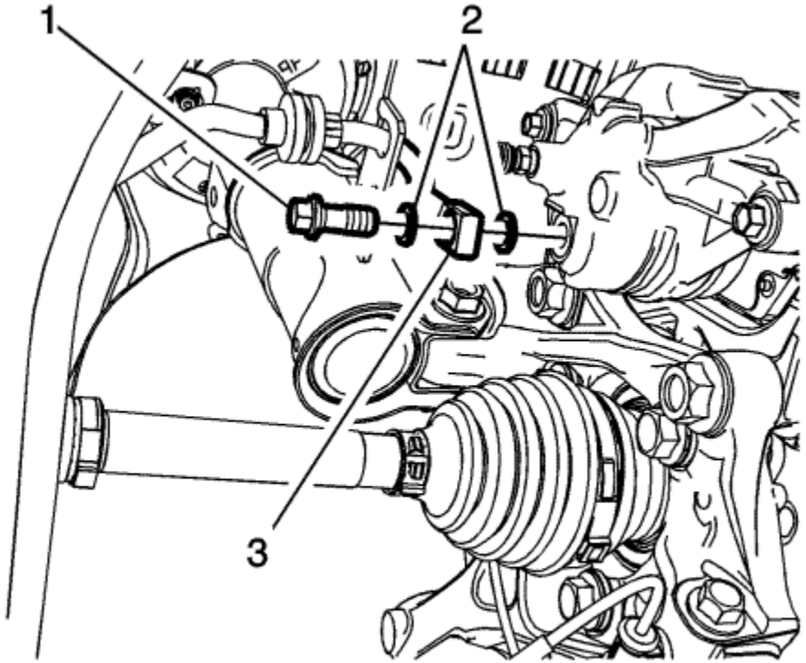

7. Remove the brake hose fitting bolt (1).
8. Remove and discard the brake hose fitting gaskets (2) from the brake hose fitting (3).
9. Remove the brake hose.

Installation Procedure

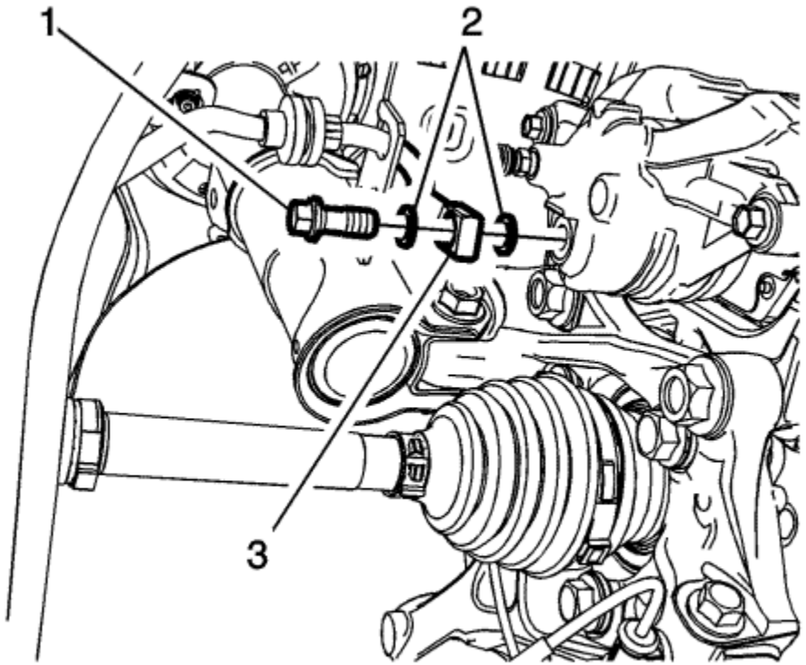

1. Assemble the brake hose fitting bolt (1) and the new brake hose fitting gaskets (2) to the brake hose fitting (3).

   Caution: Refer to Fastener Caution in the Preface section.

2. Install the brake hose assembly to the brake calliper and tighten the fitting bolt to **40 N·m (30 lb ft)**.

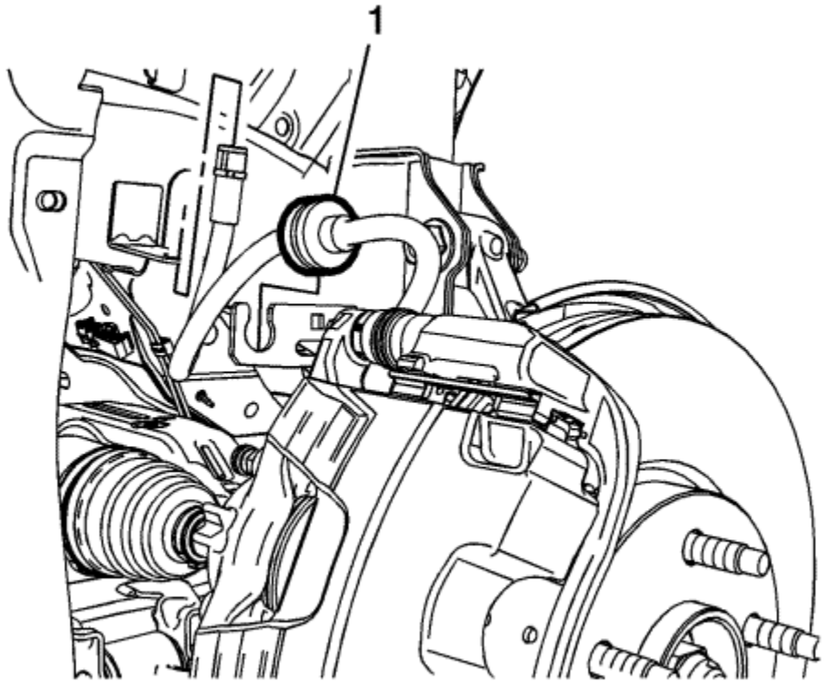

3. Install the brake hose grommet (1) to the strut bracket.

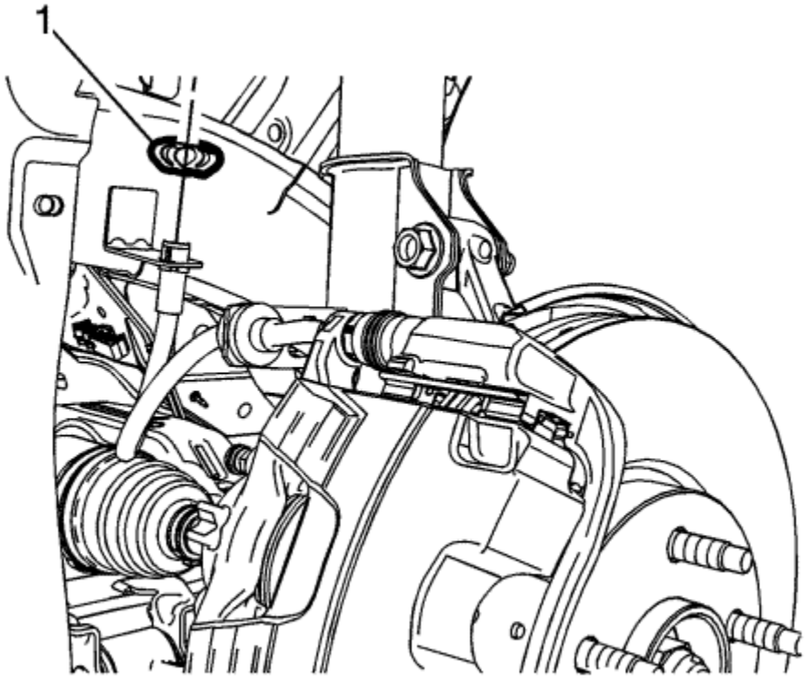

4. Install the brake hose to the wheelhouse bracket and install the retainer (1).

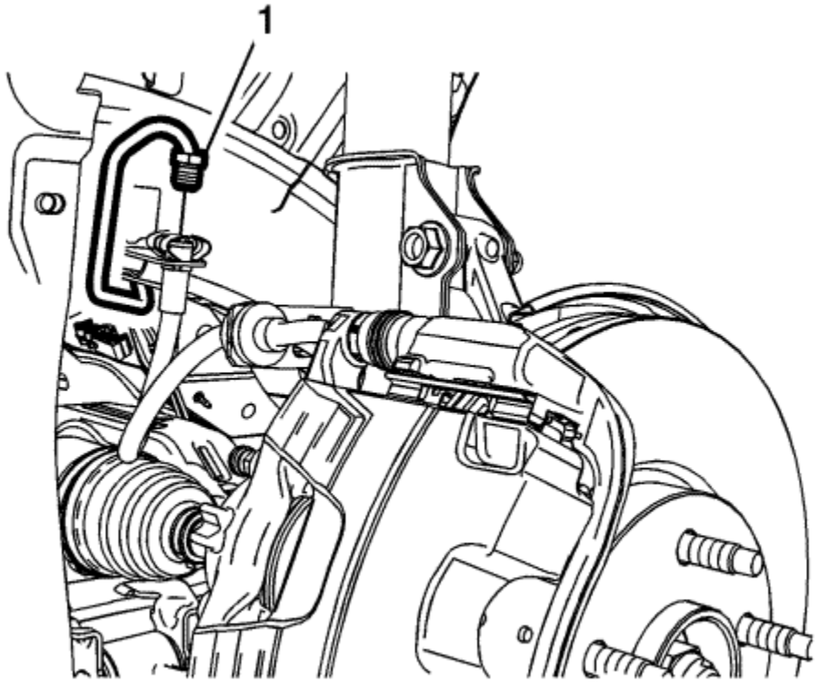

5. Install the brake pipe fitting (1) to the front brake hose and tighten the fitting to **23 N·m (17 lb ft)**.
6. Bleed the hydraulic brake system. Refer to Hydraulic Brake System Bleeding : Pressure .
7. Install the tyre and wheel assembly. Refer to Tyre and Wheel Removal and Installation .

© Copyright Chevrolet. All rights reserved

Rear Brake Hose Replacement

Removal Procedure

Warning: Refer to Brake Dust Warning in the Preface section.

Warning: Refer to Brake Fluid Irritant Warning in the Preface section.

Danger: Do not use a service jack in locations other than those specified to lift this vehicle. Lifting the vehicle with a jack in those other locations could cause the vehicle to slip off the jack and roll; this could cause injury or death.

1. Raise and support the vehicle. Refer to Lifting and Jacking the Vehicle .
2. Remove the tyre and wheel assembly. Refer to Tyre and Wheel Removal and Installation .

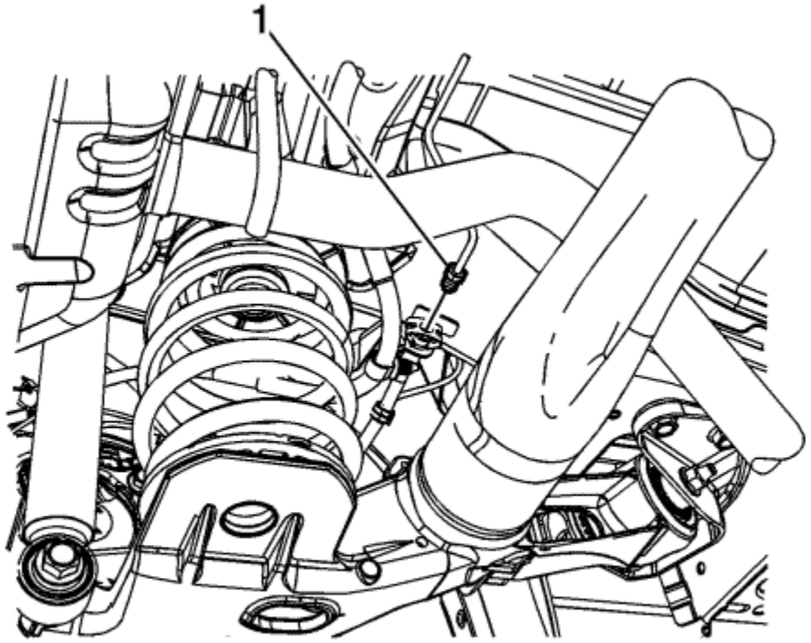

3. Remove the rear brake pipe fitting (1) from the rear brake hose.
4. Cap the brake pipe fitting to prevent brake fluid loss and contamination.

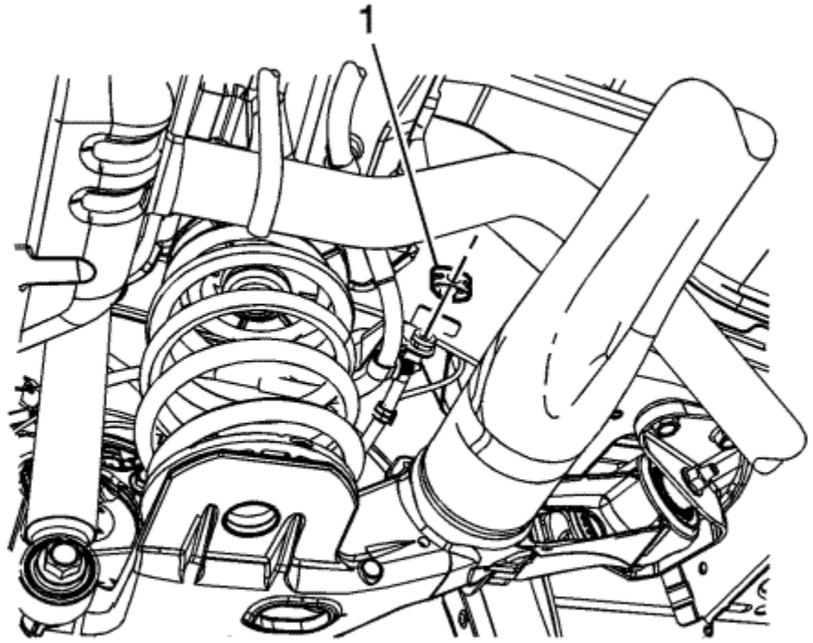

5. Remove the rear brake hose retainer (1).

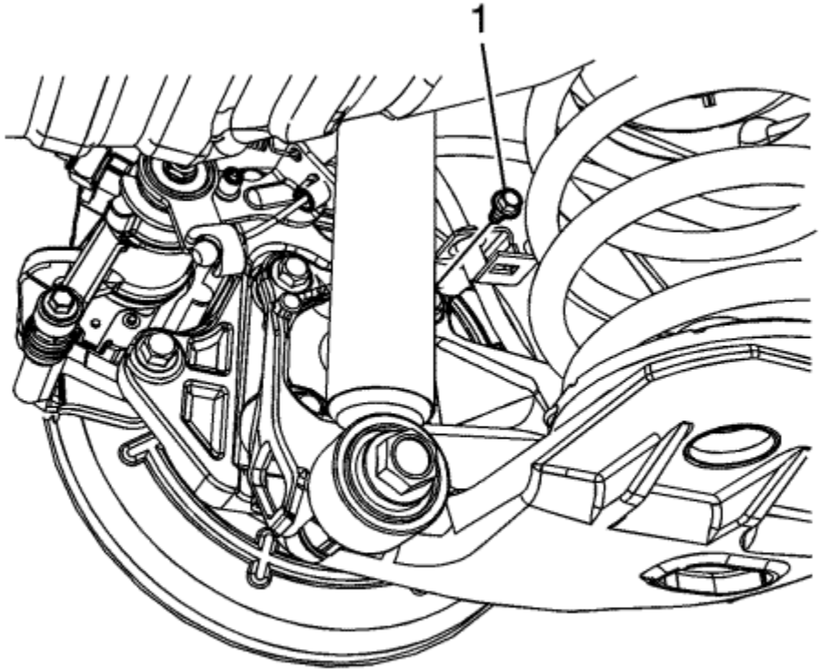

6. Remove the rear brake hose bracket bolt (1).

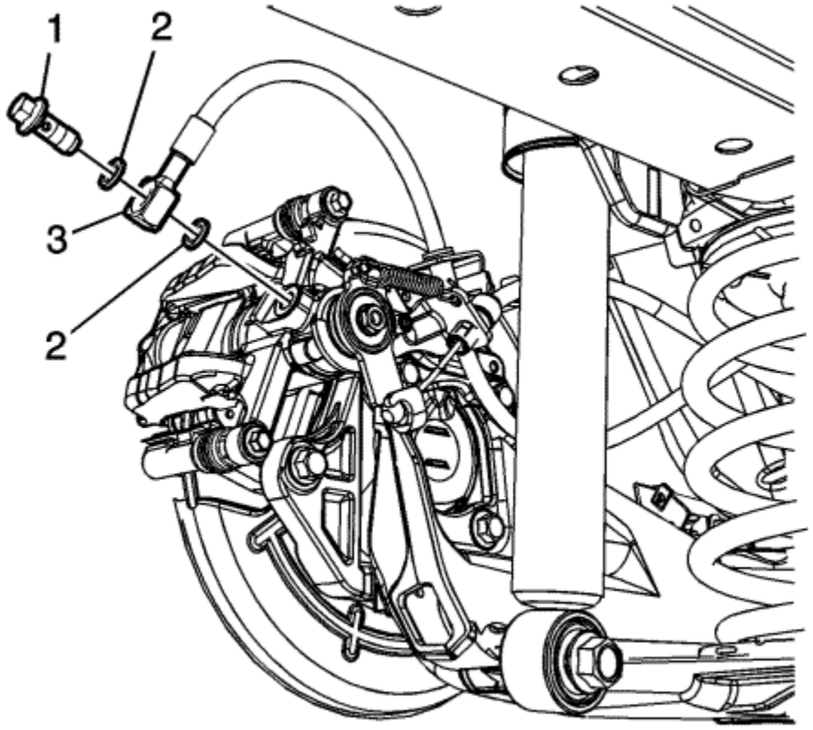

7. Remove the brake hose fitting bolt (1).
8. Remove and discard the brake hose fitting gaskets (2) from the brake hose fitting (3).
9. Remove the rear brake hose.

Installation Procedure

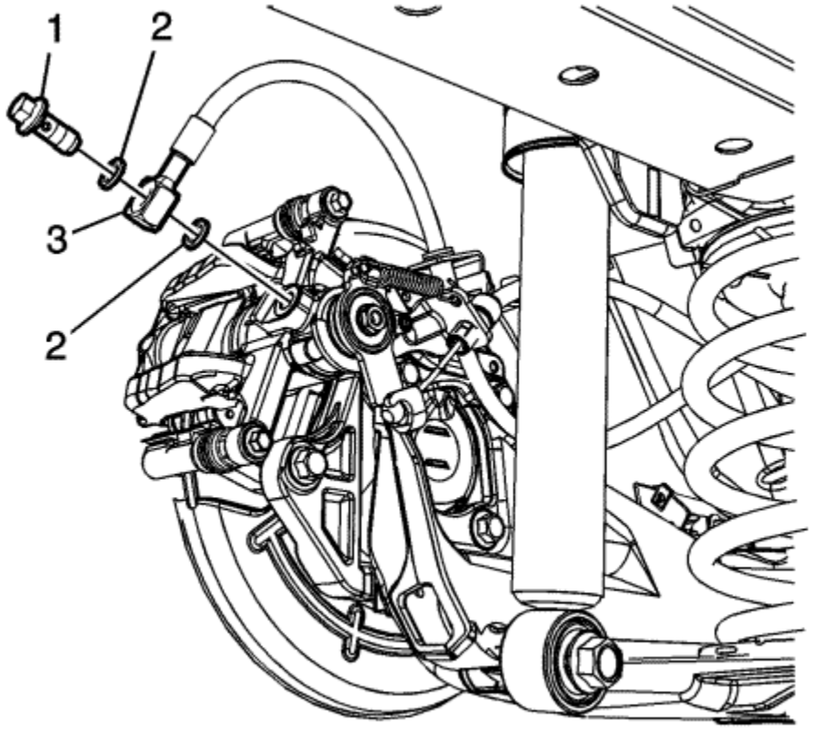

1. Assemble the brake hose fitting bolt (1) and the new fitting gaskets (2) to the brake hose fitting (3).

   Caution: Refer to Fastener Caution in the Preface section.

2. Install the brake hose assembly to the brake calliper and tighten the fitting bolt to **40 N·m (30 lb ft)**.

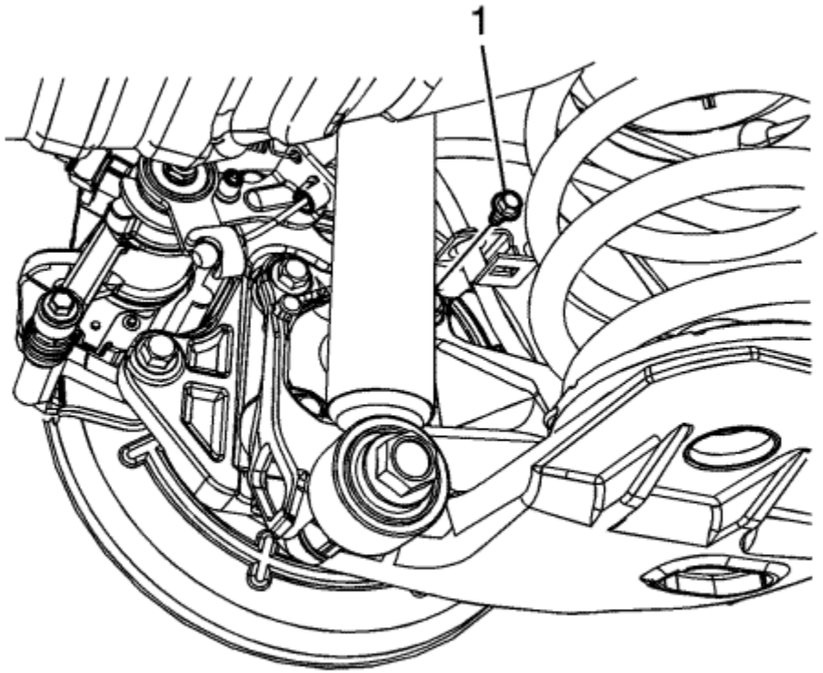

3. Install the rear brake hose bracket bolt (1) and tighten to **9 N·m (80 lb in)**.

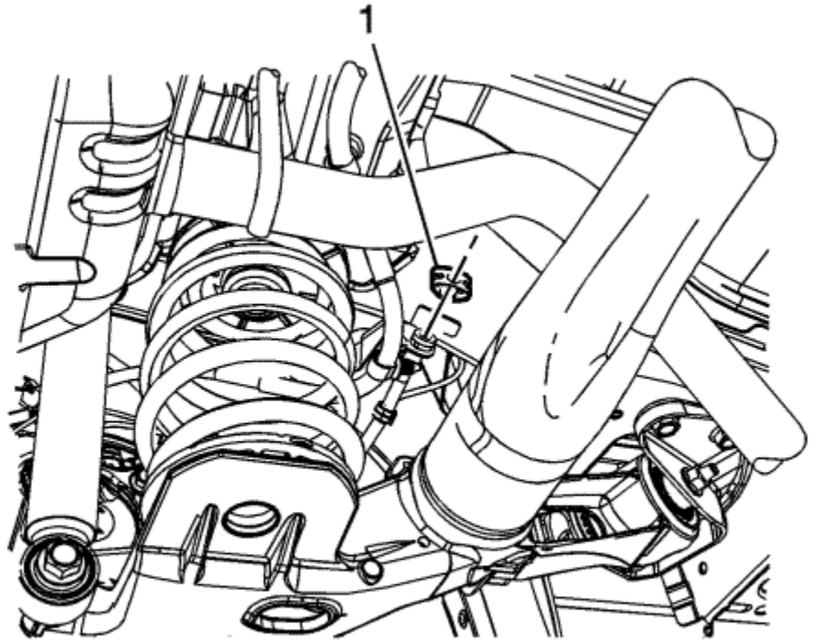

4. Install the rear brake hose retainer (1).

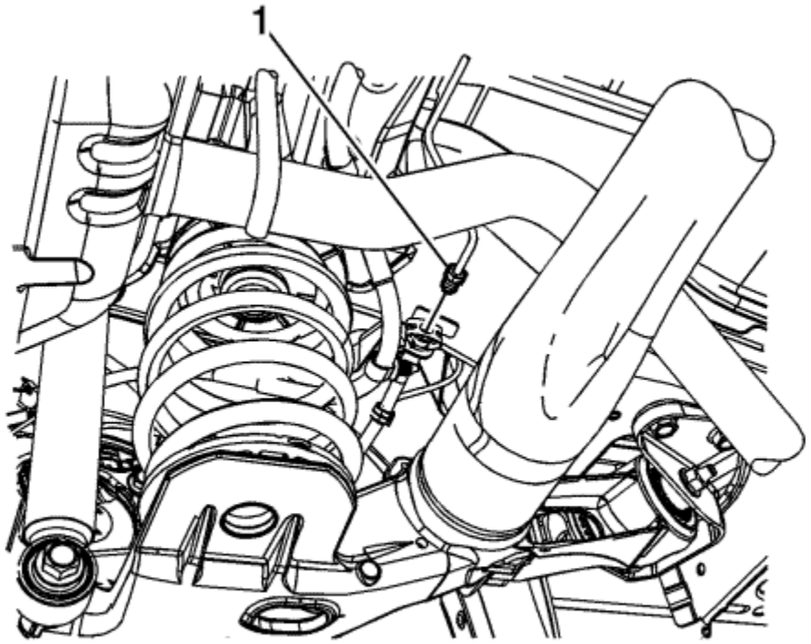

5. Install the rear brake pipe fitting (1) to the rear brake hose and tighten the fitting to **23 N·m (17 lb ft)**.
6. Bleed the hydraulic brake system. Refer to Hydraulic Brake System Bleeding : Pressure .
7. Install the tyre and wheel assembly. Refer to Tyre and Wheel Removal and Installation .

© Copyright Chevrolet. All rights reserved

Hydraulic Brake System Bleeding - Pressure

Special Tools

- *CH-29532-A* Brake Pressure Bleeder, or equivalent
- *CH-35589-A* Brake Pressure Bleeder Adapter

For equivalent regional tools, refer to Special Tools .

Warning: Refer to Brake Fluid Irritant Warning in the Preface section.

Caution: Refer to Brake Fluid Effects on Paint and Electrical Components Caution in the Preface section.

Caution: Only use products that comply with GM specifications and check manufacturer information respectively. We recommend the use of GM genuine products. Instructions must be followed at all times. The use of any type of fluid other than the recommended type of brake fluid, may cause contamination which could result in damage to the internal rubber seals and/or rubber linings of hydraulic brake system components.

> **Note:** The transmission must be in the PARK position, the power button in the OFF position, and the brakes not applied to ensure the brake modulator and high pressure accumulator (HPA) pressure relief occurs. This process will take approximately 1 to 3 minutes.

1. Place the transmission in PARK.
2. Place the power button in the OFF position.
3. Remove the remote keyless entry (RKE) transmitter and close all of the vehicle doors.
4. Place a clean shop cloth beneath the brake master cylinder to prevent brake fluid spills.
5. With the power button OFF and the brakes cool, apply the brakes 3-5 times, or until the brake pedal effort increases significantly, in order to deplete the brake booster power reserve.
6. If you have performed a brake master cylinder bench bleeding on this vehicle, or if you disconnected the brake pipes from the master cylinder, you must perform the following steps:
   6.1. Ensure that the brake master cylinder reservoir is full to the maximum-fill level. If necessary add Delco Supreme 11®, GM P/N 12377967 (Canadian P/N 992667), or equivalent DOT-3 brake fluid from a clean, sealed brake fluid container.

   If removal of the reservoir cap and diaphragm is necessary, clean the outside of the reservoir on and around the cap prior to removal.

   6.2. With the rear brake pipe installed securely to the master cylinder, loosen and separate the front brake pipe from the front port of the brake master cylinder.
   6.3. Allow a small amount of brake fluid to gravity bleed from the open port of the master cylinder.

6.4. Reconnect the brake pipe to the master cylinder port and tighten securely.
6.5. Have an assistant slowly depress the brake pedal fully and maintain steady pressure on the pedal.
6.6. Loosen the same brake pipe to purge air from the open port of the master cylinder.
6.7. Tighten the brake pipe, then have the assistant slowly release the brake pedal.
6.8. Wait 15 seconds, then repeat steps 6.2-6.7 until all air is purged from the same port of the master cylinder.
6.9. With the front brake pipe installed securely to the master cylinder, after all air has been purged from the front port of the master cylinder, loosen and separate the rear brake pipe from the master cylinder, then repeat steps 6.2-6.8.
6.10. After completing the final master cylinder port bleeding procedure, ensure that both of the brake pipe-to-master cylinder fittings are properly tightened.

7. Fill the brake master cylinder reservoir to the maximum-fill level with Delco Supreme 11®, GM P/N 12377967 (Canadian P/N 992667), or equivalent DOT-3 brake fluid from a clean, sealed brake fluid container.

   Clean the outside of the reservoir on and around the reservoir cap prior to removing the cap and diaphragm.

8. Install the *CH-35589-A* Brake Pressure Bleeder Adapter to the brake master cylinder reservoir.
9. Check the brake fluid level in the *CH-29532-A* Brake Pressure Bleeder, or equivalent . Add Delco Supreme 11®, GM P/N 12377967 (Canadian P/N 992667), or equivalent DOT-3 brake fluid from a clean, sealed brake fluid container as necessary to bring the level to approximately the half-full point.
10. Connect the *CH-29532-A* Brake Pressure Bleeder, or equivalent , to the *CH-35589-A* Brake Pressure Bleeder Adapter .
11. Charge the *CH-29532-A* Brake Pressure Bleeder, or equivalent , air tank to 175-205 kPa (25-30 psi).
12. Open the *CH-29532-A* Brake Pressure Bleeder, or equivalent , fluid tank valve to allow pressurised brake fluid to enter the brake system.
13. Wait approximately 30 seconds, then inspect the entire hydraulic brake system in order to ensure that there are no existing external brake fluid leaks.

    Any brake fluid leaks identified require repair prior to completing this procedure.

14. Install a proper ring spanner onto the RIGHT REAR wheel hydraulic circuit bleeder valve.
15. Install a transparent hose over the end of the bleeder valve.
16. Submerge the open end of the transparent hose into a transparent container partially filled with Delco Supreme 11®, GM P/N 12377967 (Canadian P/N 992667), or equivalent DOT-3 brake fluid from a clean, sealed brake fluid container.
17. Loosen the bleeder valve to purge air from the wheel hydraulic circuit. Allow fluid to flow until air bubbles stop flowing from the bleeder, then tighten the bleeder valve.
18. With the right rear wheel hydraulic circuit bleeder valve tightened securely, after all air has been purged from the right rear hydraulic circuit, install a proper box-end wrench onto the LEFT REAR wheel hydraulic circuit bleeder valve.
19. Install a transparent hose over the end of the bleeder valve, then repeat steps 16-17.
20. With the left rear wheel hydraulic circuit bleeder valve tightened securely, after all air has been purged from the left rear hydraulic circuit, install a proper ring spanner onto the RIGHT FRONT wheel hydraulic circuit bleeder valve.
21. Install a transparent hose over the end of the bleeder valve, then repeat steps 16-17.
22. With the right front wheel hydraulic circuit bleeder valve tightened securely, after all air has been purged from the right front hydraulic circuit, install a proper box-end wrench onto the LEFT FRONT wheel hydraulic circuit bleeder valve.
23. Install a transparent hose over the end of the bleeder valve, then repeat steps 16-17.
24. After completing the final wheel hydraulic circuit bleeding procedure, ensure that each of the 4 wheel hydraulic circuit bleeder valves are properly tightened.
25. Close the *CH-29532-A* Brake Pressure Bleeder, or equivalent , fluid tank valve, then disconnect the *CH-29532-A* Brake Pressure Bleeder, or equivalent , from the *CH-35589-A* Brake Pressure Bleeder Adapter .
26. Remove the *CH-35589-A* Brake Pressure Bleeder Adapter from the brake master cylinder reservoir.

27. Fill the brake master cylinder reservoir to the maximum-fill level with Delco Supreme 11®, GM P/N 12377967 (Canadian P/N 992667), or equivalent DOT-3 brake fluid from a clean, sealed brake fluid container.
28. Slowly depress and release the brake pedal. Observe the feel of the brake pedal.
29. If the brake pedal feels spongy perform the following steps:
    29.1. Inspect the brake system for external leaks. Refer to Brake System External Leak Inspection .
    29.2. Using a scan tool, perform the antilock brake system automated bleeding procedure to remove any air that may have been trapped in the brake pressure modulator valve (BPMV). Refer to Antilock Brake System Automated Bleed .
30. Turn the power button ON, with the engine OFF. Check to see if the brake system warning lamp remains illuminated.

Note: If the brake system warning lamp remains illuminated, DO NOT allow the vehicle to be driven until it is diagnosed and repaired.

31. If the brake system warning lamp remains illuminated, refer to Symptoms - Hydraulic Brakes .

© Copyright Chevrolet. All rights reserved

Hydraulic Brake System Flushing

Warning: Refer to Brake Fluid Irritant Warning in the Preface section.

Caution: Refer to Brake Fluid Effects on Paint and Electrical Components Caution in the Preface section.

Caution: Only use products that comply with GM specifications and check manufacturer information respectively. We recommend the use of GM genuine products. Instructions must be followed at all times. The use of any type of fluid other than the recommended type of brake fluid, may cause contamination which could result in damage to the internal rubber seals and/or rubber linings of hydraulic brake system components.

1. Inspect the brake fluid for the following conditions, indicating brake fluid contamination:
   - Fluid separation, indicating two types of fluid are present; a substance other than the recommended brake fluid has been introduced into the brake hydraulic system
     -- Swirled appearance - oil-based substance
     -- Layered appearance - silicone-based substance
   - Fluid discolouration, indicating the presence of moisture or particles that have been introduced into the brake hydraulic system
     - Cloudy appearance - moisture
     -- Dark appearance/suspended particles in fluid - dirt, rust, corrosion, brake dust
2. Inspect the master cylinder reservoir cap diaphragm and the reservoir-to-master cylinder grommets for swelling, indicating brake fluid contamination.
3. If the brake fluid WAS contaminated with an oil-based or a silicone-based substance, indicated by fluid separation and/or a swollen master cylinder reservoir cap diaphragm and/or swollen reservoir-to-master cylinder grommets, perform the following:
   3.1. Remove ALL of the following components listed from the vehicle. Each component contains internal rubber seals/linings which have been contaminated by the contaminated brake fluid in the brake hydraulic system.

   Refer to the procedures indicated as applicable:

   - Master Cylinder Replacement
   - Front Brake Hose Replacement
   - Rear Brake Hose Replacement
   - Front Brake Calliper Replacement
   - Rear Brake Calliper Replacement
   - Electronic Brake Control Module with Brake Pressure Modulator Valve Replacement

   3.2. Clean out all the hydraulic brake pipes using methylated spirit, or equivalent.

3.3. Dry the brake pipes using non-lubricated, filtered air.
3.4. Repair or replace ALL of the following components listed and install them to the vehicle. Each component contains internal rubber seals/linings which have been contaminated by the contaminated brake fluid in the brake hydraulic system.

Refer to the procedures indicated as applicable:

- Master Cylinder Replacement ; also perform the following:
- Clean the brake master cylinder reservoir using methylated spirit, or equivalent, then dry the reservoir using non-lubricated, filtered air. Inspect the reservoir for cracks and/or damage and replace if necessary. Refer to Master Cylinder Reservoir Replacement .
- Replace the brake master cylinder reservoir cap diaphragm.
- Front Brake Hose Replacement
- Rear Brake Hose Replacement
- Front Brake Calliper Overhaul or Front Brake Calliper Replacement
- Rear Brake Calliper Overhaul or Rear Brake Calliper Replacement
- Electronic Brake Control Module with Brake Pressure Modulator Valve Replacement

4. If the brake fluid was NOT contaminated with an oil-based or a silicone-based substance, but WAS contaminated with water or dirt, rust, corrosion, and/or brake dust, replace the brake master cylinder reservoir cap diaphragm. The diaphragm may have allowed the moisture or particles to enter the hydraulic system.
5. Fill the brake master cylinder reservoir to the maximum-fill level with Delco Supreme 11®, GM P/N 12377967 (Canada P/N 992667) or equivalent, DOT-3 brake fluid from a clean, sealed brake fluid container.
6. Pressure bleed the hydraulic brake system. Begin the procedure with the pressure bleeder reservoir filled to the maximum-fill level with the correct brake fluid as indicated. Refer to Hydraulic Brake System Bleeding : Pressure .

&#169© Copyright Chevrolet. All rights reserved

Brake System, Hydraulic, Assist, and Control Description and Operation

System Component Description

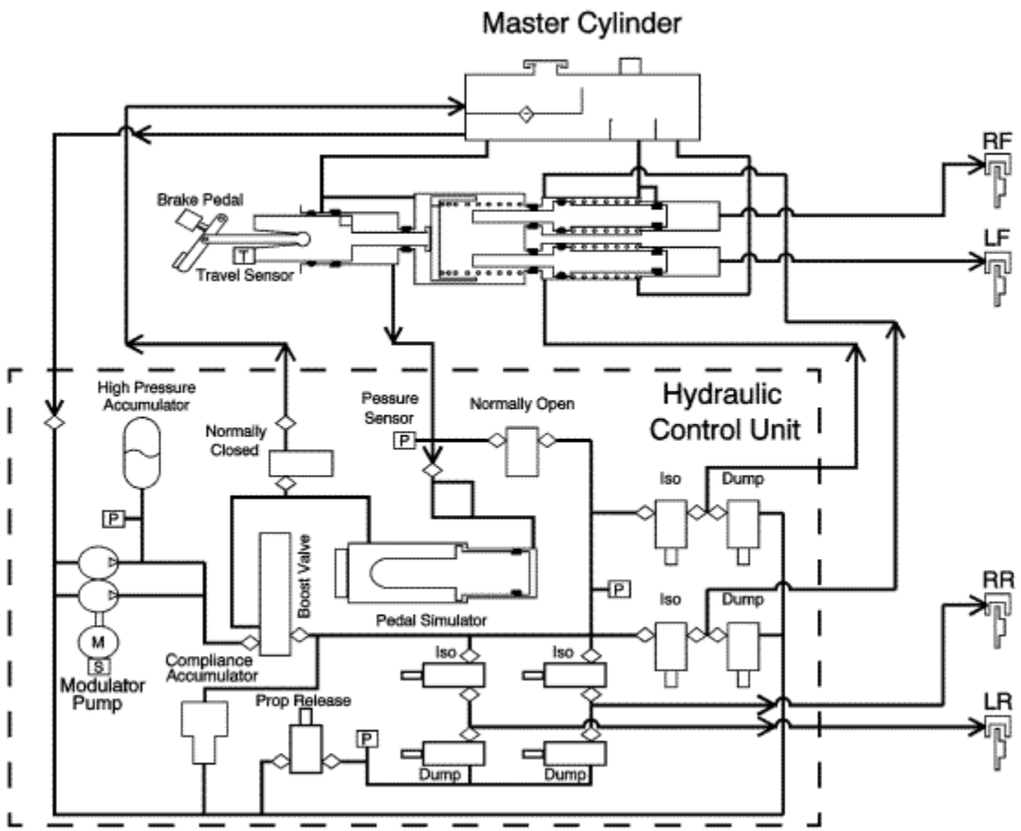

The hydraulic brake system consists of the following:

Hydraulic Brake Master Cylinder Fluid Reservoir: Contains supply of brake fluid for the hydraulic brake system. Provides for brake fluid to be drawn back into and vented back from the master cylinder primary piston and secondary pistons. Also provides for brake fluid to be drawn into the motor driven pump and high pressure accumulator

(HPA) areas of the brake modulator assembly, and vented back from various areas of the modulator assembly as needed. Provides markings for both the MIN and MAX parameters of the pressurised or operating range; and for the maximum depressurised or system OFF level.

Hydraulic Brake Master Cylinder: Converts mechanical input force into hydraulic output pressure. During normal operation, hydraulic output pressure is distributed from the primary piston of the master cylinder through hydraulic circuits to the pedal feel simulator within the brake modulator assembly. Hydraulic pressure for the wheel apply circuits is generated by a motor driven pump and stored by a high pressure accumulator (HPA) within the modulator assembly. This pressurised fluid is distributed through valves to the rear apply circuits and to the secondary pistons of the master cylinder which, in turn, distribute pressurised fluid to the front wheel apply circuits.

Hydraulic Brake Pipes and Flexible Brake Hoses: Carries brake fluid to and from hydraulic brake system components.

Hydraulic Brake Wheel Apply Components: Converts hydraulic input pressure into mechanical output force.

The brake assist system consists of the following:

Brake Pedal: Receives, multiplies and transfers brake system input force from the driver.

Brake Pedal Pushrod: Transfers multiplied input force received from the brake pedal to the brake booster.

Hydraulic Brake Modulator Assembly: Contains several high pressure sensors, valves, solenoids and filters as well as a motor driven pump, high pressure accumulator (HPA), high pressure filter, pedal feedback or pedal simulator and the electronic brake control module (EBCM). The assembly monitors various sensor, control module and driver inputs to determine and command the optimal amount of brake fluid pressure needed for a given situation. The modulator assembly then blends and delivers the pressurised fluid to the wheel apply circuits as appropriate for correct braking balance and performance.

System Operation

When the power button is placed in ON/RUN or a remote function actuation (RFA) commands remote START, the brake modulator assembly activates and pressurises brake fluid for use at the wheel apply circuits as needed.

The brake modulator assembly incorporates a motor driven pump which is activated as required to draw brake fluid directly from the master cylinder reservoir, lowering the brake fluid level in the reservoir into the pressurised, or operating, range. The pump pressurises and delivers the brake fluid to the high pressure accumulator (HPA) to store for use as necessary. Sensor data of HPA fluid pressure is used by the modulator to operate the pump to maintain the pressure of the brake fluid at the HPA within operating range. Working pressure of the HPA stored fluid is 140-180 bar (2030-2610 psi). Peak allowed pressure is 200 bar (2900 psi). Pressure relief is vented back to the master cylinder reservoir.

Brake system mechanical input force from the driver is multiplied by the brake pedal and transferred by the pedal pushrod to the hydraulic brake master cylinder. This mechanical force is converted into hydraulic pressure by the primary piston of the master cylinder. The pressurised brake fluid from the primary piston is delivered to the brake modulator assembly and is directed within the modulator to the brake pedal feel simulator.

To allow operation of the pedal feel simulator, the brake modulator assembly energises and then closes the normally open (NO) valve to direct brake fluid only to the pedal feel simulator. The brake modulator also energises and opens a normally closed (NC) valve to allow brake fluid to escape from the backside of the brake pedal feel simulator

to the master cylinder reservoir, allowing the simulator piston to move. The pedal feel simulator incorporates a spring which causes increasing brake pedal effort and feedback through the master cylinder, providing brake pedal feel to the driver.

The brake modulator assembly uses sensor data of the brake pedal and pushrod travel and the master cylinder input fluid pressure to determine the amount of braking performance requested by the driver.

Based on the amount of braking action requested by the driver and sensor data inputs of fluid pressure throughout the brake modulator assembly passageways, the modulator uses a boost valve to continuously provide the optimal fluid pressure for use by the wheel apply circuits. The modulator assembly uses the boost valve to both build and relieve pressure within the wheel apply circuits. The boost valve meters the flow of pressurised brake fluid from the HPA to build pressure and relieves pressure as needed by venting fluid through the energised, and open, NC valve to the master cylinder reservoir. The brake modulator assembly also controls various valves in a way similar to a traditional brake modulator, to blend and modulate delivery of brake fluid to the wheel apply circuits, to achieve optimal balance and brake system output performance. The brake modulator delivers brake fluid to the wheel apply circuits as follows:

- Through isolation valves directly to the rear wheel apply circuits
- Through isolation valves directly to the secondary pistons of the master cylinder
- The secondary pistons of the master cylinder then delivers pressurised brake fluid directly to the front wheel apply circuits

Pressurised brake fluid is delivered to the wheel apply hydraulic components through the brake pipes and flexible hoses. The wheel apply components then convert the hydraulic pressure back into mechanical force which presses the brake linings against rotating brake system components to slow the vehicle through friction braking.

When the power button is placed in the OFF position and the brake pedal is not applied, the system will deactivate and depressurise. As the system begins to depressurise, brake fluid will discharge from the HPA and vent back into the master cylinder reservoir. This will cause the brake fluid level in the master cylinder reservoir to rise to the depressurised or system OFF range. The system may take up to 3 minutes to fully depressurise.

If the brake pedal is applied before the system has fully depressurised, the brake modulator will maintain the pressure available at the moment of the brake apply until the brake pedal is released. This will increase the amount of time required for the system to depressurise.

Regenerative Braking Function: During a regenerative braking event, the powertrain is used to create drag or torque braking through the drive axle, against the forward motion of the vehicle, while providing a charging function for the batteries.

The brake modulator assembly and the powertrain system controllers are in constant communication with each other. Each system is monitoring various system, sensor data, and driver inputs. Working together, a determination is made as to when the most appropriate opportunity for regenerative braking will occur. The brake modulator will request from the powertrain controllers the amount of torque braking that is available from the powertrain to be delivered through the drive axle. If the powertrain controllers in conjunction with the brake modulator have determined to perform a regenerative braking event, the brake modulator will request a specific amount of regenerative or torque braking to be provided from the powertrain.

Simultaneously, the brake modulator continuously evaluates and provides the correct blend of friction braking from the non-drive axle, and provides the correct blend of regenerative or torque braking and friction braking from the drive axle to provide the most efficient amount of regenerative braking and charging for the needs of the powertrain. All the while, providing optimal braking balance and providing the correct blend and amount of overall vehicle braking action requested by the driver through a brake pedal apply.

Deactivated System: If the brake modulator assembly is powered down either by placing the power button in the OFF position and not applying the brake pedal, or through a system power source failure or if the modulator detects certain critical faults, the system will operate as follows:

Brake system mechanical input force from the driver is multiplied by the brake pedal and transferred by the brake pedal pushrod to the hydraulic brake master cylinder. This mechanical force is converted into hydraulic pressure by the primary piston of the master cylinder.

The pressurised brake fluid from the primary piston is delivered to the brake modulator assembly and is directed within the brake modulator to the wheel apply passageways, rather than to the pedal simulator.

Since the modulator is not energising the normally open (NO) valve to cause it to close and direct pressurised fluid only to the pedal simulator, the NO valve is open and directing fluid to both the pedal simulator and the wheel apply circuit passageways. To prevent any loss of pressure through the pedal simulator, or through the boost valve, the normally closed (NC) valve is closed since it is not energised by the modulator. Since the NC valve is closed, no fluid can escape from the backside of the simulator, thus preventing any movement of the piston within the pedal simulator and any subsequent loss of pressure. The same is true with the boost valve, since the NC valve is closed, no fluid can escape from the pressure relief side of the boost valve, thus preventing loss of pressure. The pressurised fluid is now delivered through the wheel apply circuit passageways within the modulator as follows:

- Through de-energised, open isolation valves directly to the rear wheel apply circuits
- Through de-energised, open isolation valves directly to the secondary pistons of the master cylinder
- The secondary pistons of the master cylinder then deliver pressurised brake fluid directly to the front wheel apply circuits

If a hydraulic failure occurs in the boost circuit of the modulator during further pedal apply, the system will operate as follows:

The mechanical input force is applied further as the primary piston of the master cylinder directly contacts the secondary pistons, which then convert the mechanical force into hydraulic pressure. The pressurised brake fluid from the secondary pistons is delivered directly to the front wheel apply circuits.

&#169© Copyright Chevrolet. All rights reserved

Brake Warning System Description and Operation

Brake Warning Indicator

The instrument cluster turns the brake warning indicator ON when the following occurs:

- The instrument cluster performs the bulb check. The brake warning indicator illuminates for 5 seconds.
- When the EBCM detects a too low brake fluid level it sets DTC C0267 and sends a serial data message to the instrument cluster, which will illuminate.

Electronic brake control module (EBCM) monitors the brake fluid level in the brake fluid reservoir. When the fluid within the brake fluid reservoir is below the MIN level, contacts within the brake fluid level switch closes causing the voltage within the signal circuit to drop. The electronic brake control module (EBCM) will detect the voltage drop and will send a serial data message to the instrument cluster commanding the brake warning indicator to illuminate.

&#169© Copyright Chevrolet. All rights reserved

Hydraulic Brake System Description and Operation

System Component Description

The hydraulic brake system consists of the following:

Hydraulic Brake Master Cylinder Fluid Reservoir: Contains supply of brake fluid for the hydraulic brake system.

Hydraulic Brake Master Cylinder: Converts mechanical input force into hydraulic output pressure. Hydraulic output pressure is distributed from the master cylinder through 2 hydraulic circuits, supplying diagonally-opposed wheel apply circuits.

Hydraulic Brake Pressure Balance Control System: Regulates brake fluid pressure delivered to hydraulic brake wheel circuits, in order to control the distribution of braking force. Pressure balance control is achieved through dynamic rear proportioning (DRP), which is a function of the ABS modulator.

Hydraulic Brake Pipes and Flexible Brake Hoses: Carries brake fluid to and from hydraulic brake system components.

Hydraulic Brake Wheel Apply Components: Converts hydraulic input pressure into mechanical output force.

System Operation

Mechanical force is converted into hydraulic pressure by the master cylinder, regulated to meet braking system demands by the pressure balance control system, and delivered to the hydraulic brake wheel circuits by the pipes and flexible hoses. The wheel apply components then convert the hydraulic pressure back into mechanical force which presses linings against rotating brake system components.

© Copyright Chevrolet. All rights reserved

Special Tools

Illustration	Tool Number/ Description
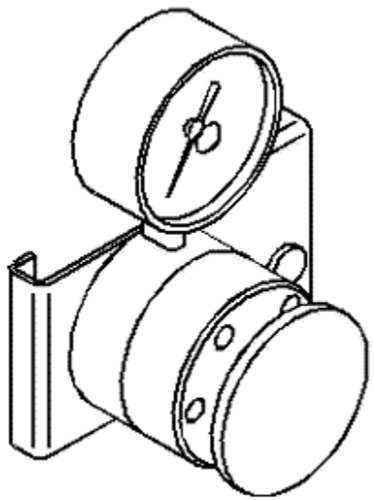	CH 28662 J 28662 Brake Pedal Effort Gauge
	CH 29532-A J 29532-A Pressure Brake Bleeder

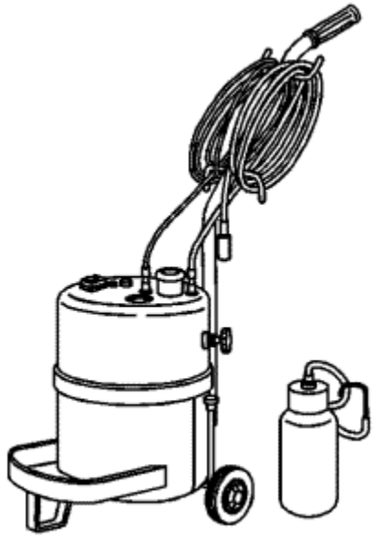

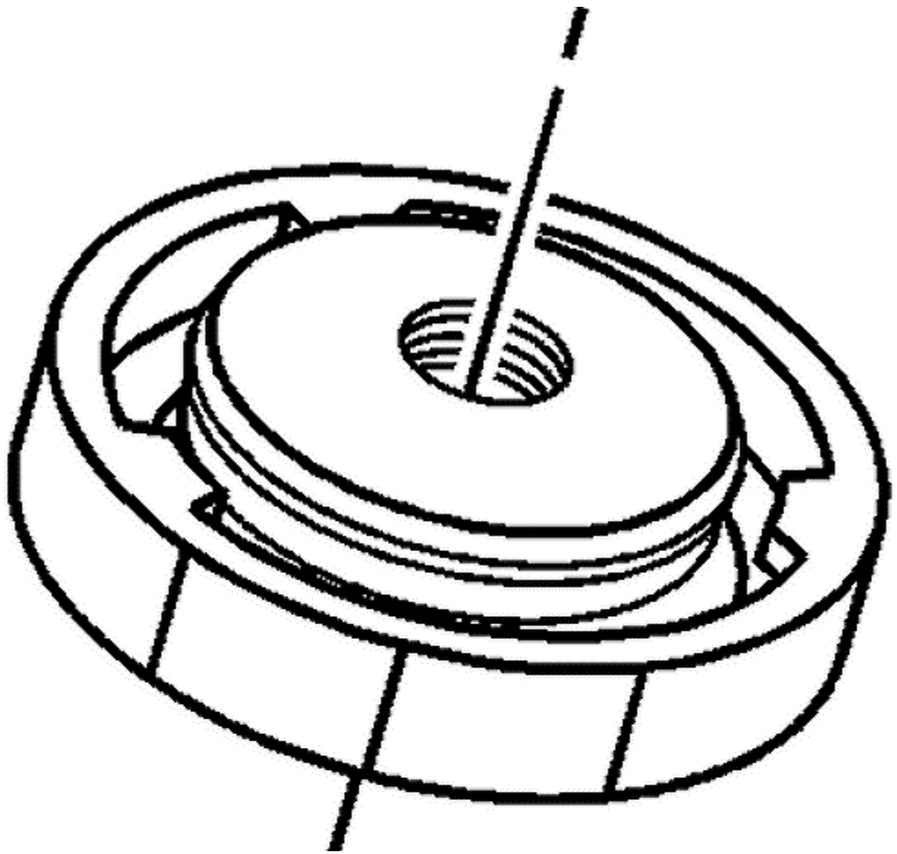

CH 35589-A

J 35589-A

Brake Pressure Bleeder Adapter

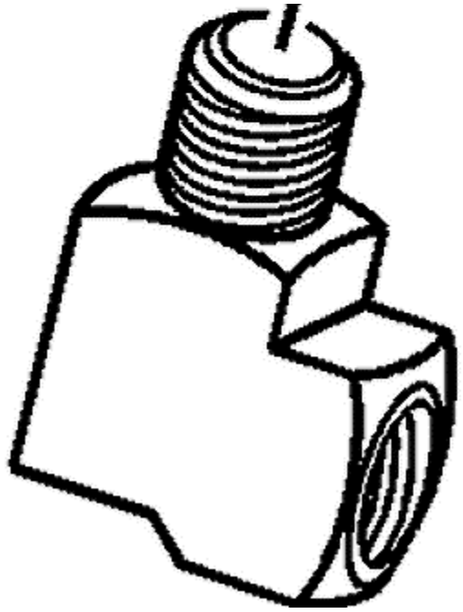	
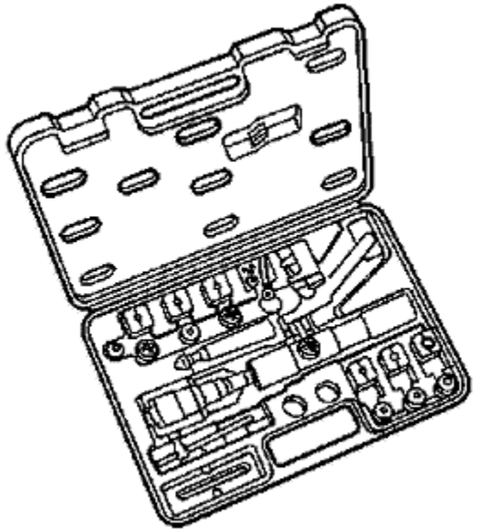	CH 45405 J 45405 Brake Pipe Flaring Kit

© Copyright Chevrolet. All rights reserved

Fastener Tightening Specifications

Application	Specification	
	Metric	English
Electronic Hand brake Control Module Nut	10 N·m	89 lb in
Hand brake Cable Bracket Bolt	10 N·m	89 lb in
Hand Brake Cable Bracket Nut	10 N·m	89 lb in
Hand brake Cable Nut	6 N·m	53 lb in

© Copyright Chevrolet. All rights reserved

Hand brake System Schematics

Hand brake

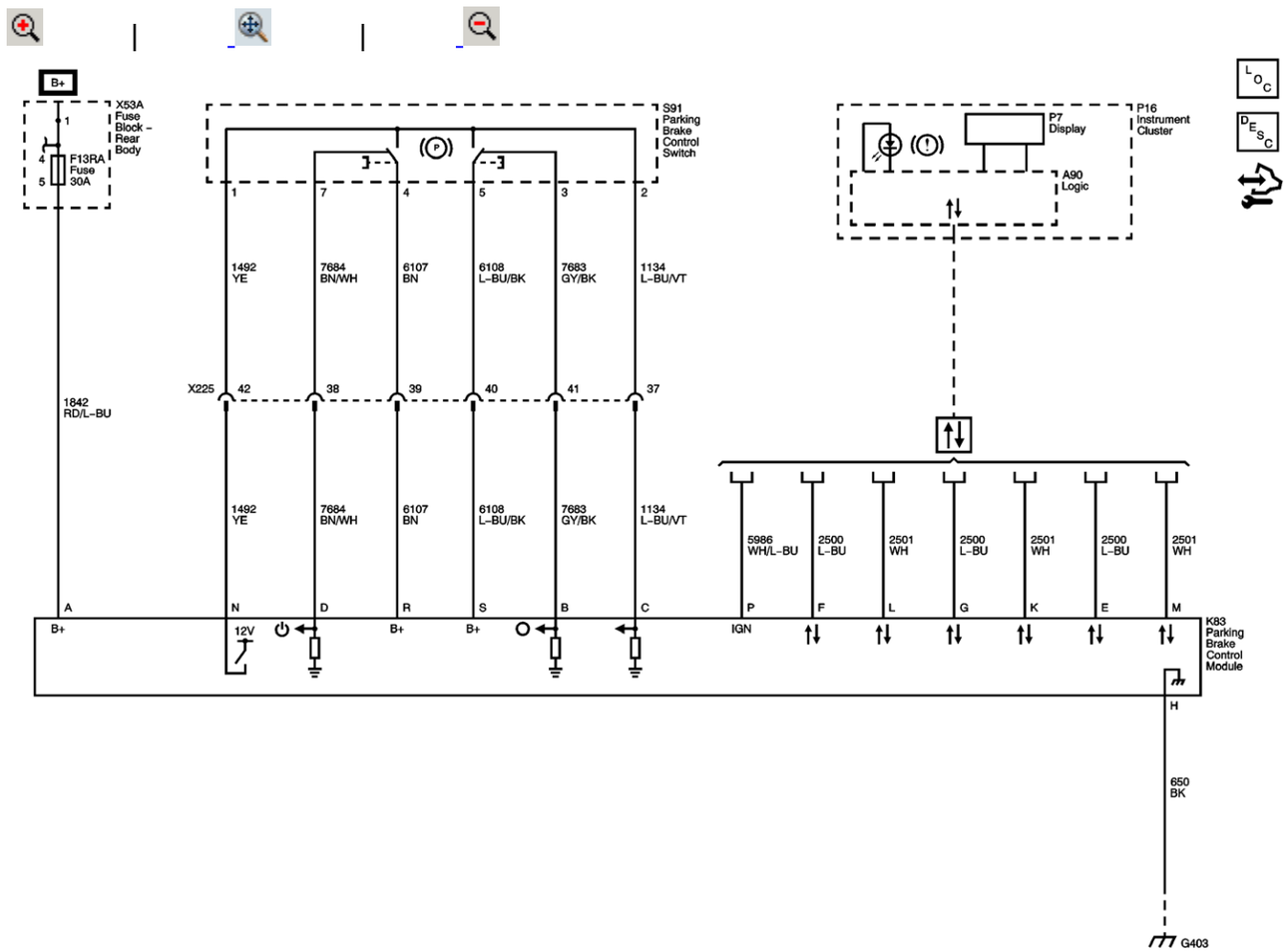

Master Electrical Component List

Hand brake System Description and Operation

F2RA, F3RA, F4RA, F5RA, F7RA, F8RA, F10RA, F12RA and F13RA Fuses

Data Communication Schematics

G403

© Copyright Chevrolet. All rights reserved

DTC C028A

Diagnostic Instructions

- Perform the Diagnostic System Check - Vehicle prior to using this diagnostic procedure.
- Review Strategy Based Diagnosis for an overview of the diagnostic approach.
- Diagnostic Procedure Instructions provide an overview of each diagnostic category.

DTC Descriptors

DTC C028A 01: Hand brake Motor Circuit Short to Battery

DTC C028A 02: Hand brake Motor Circuit Short to Ground

DTC C028A 04: Hand Brake Motor Circuit Open Circuit

DTC C028A 08: Hand brake Motor Circuit Performance-Signal Invalid

DTC C028A 28: Hand brake Motor Circuit Performance-Incorrect Frequency

Circuit/System Description

The hand brake control module has an internal motor, apply actuator, release actuator, and temperature sensor. The hand brake control module also contains the logic for applying and releasing the hand brake when commanded by the hand brake switch. When the hand brake control module receives a signal from the switch the internal circuit board temperature is checked to verify it is within operating range before the control module performs the requested operation. The hand brake control module will also diagnose the internal hand brake motor circuit to verify it is functioning properly. The hand brake motor circuit is used to command motor operation, apply and release tension on the hand brake cable, which will apply and release the hand brake.

The hand brake will self diagnose the internal Hand brake Motor Circuit. This circuit is used to drive the motor, which pulls on the hand brake cable, ultimately applying and releasing the hand brake.

Conditions for Running the DTC

- Ignition OFF, ACCESSORY, or RUN mode.
- Battery voltage is between 9 -16V

Conditions for Setting the DTC

The hand brake control module detects an internal motor malfunction.

Action Taken When the DTC Sets

- The electric hand brake is disabled.
- A message and/or a warning indicator may be displayed.

Conditions for Clearing the DTC

- The hand brake control module clears the history DTC when a current DTC is not detected in 40 ignition cycles.
- The condition for the DTC is no longer present.

Reference Information

Schematic Reference

Hand brake System Schematics

Connector End View Reference

Component Connector End Views

Description and Operation

Electronic Hand brake Control Module Description

Electrical Information Reference

- Circuit Testing
- Connector Repairs
- Testing for Intermittent Conditions and Poor Connections
- Wiring Repairs

Scan Tool Reference

Control Module References for scan tool information

Circuit/System Verification

Verify that DTC C028A is not set.

If DTC is set, program the hand brake control module. If the DTC resets, replace the K83 Hand brake Control Module.

Repair Instructions

Perform the Diagnostic Repair Verification

- Electronic Hand brake Control Module Replacement
- Control Module References

&#169© Copyright Chevrolet. All rights reserved

DTC C028B

Diagnostic Instructions

- Perform the Diagnostic System Check - Vehicle prior to using this diagnostic procedure.
- Review Strategy Based Diagnosis for an overview of the diagnostic approach.
- Diagnostic Procedure Instructions provide an overview of each diagnostic category.

DTC Descriptors

DTC C028B 08: Hand brake Motor Position Sensor Signal Performance-Signal Invalid

DTC C028B 26: Hand brake Motor Position Sensor Signal Low Frequency

DTC C028B 29: Hand brake Motor Position Sensor Signal Too Few Pulses

DTC C028B 2A: Hand brake Motor Position Sensor Signal Too Many Pulses

Circuit/System Description

The hand brake control module has an internal motor, apply actuator, release actuator, and temperature sensor. The hand brake control module also contains the logic for applying and releasing the hand brake when commanded by the hand brake switch. When the hand brake control module receives a signal from the switch the internal circuit board temperature is checked to verify it is within operating range before the control module performs the requested operation. The hand brake control module also contains an internal hand brake motor position sensor which monitors the hand brake motor position.

The Hand brake Motor Position Sensor is an internal sensor to the hand brake control module, this sensor is used to monitor the hand brake motor position.

Conditions for Running the DTC

Ignition OFF, ACCESSORY, or RUN mode.

Conditions for Setting the DTC

The hand brake control module detects an internal motor position sensor signal malfunction.

Action Taken When the DTC Sets

- The electric hand brake is disabled, one release allowed.
- A message and/or a warning indicator may be displayed.

Conditions for Clearing the DTC

- The hand brake control module clears the history DTC when a current DTC is not detected in 40 ignition cycles.
- Calibrate the hand brake control module.

Reference Information

Schematic Reference

Hand brake System Schematics

Connector End View Reference

Component Connector End Views

Description and Operation

Electronic Hand brake Control Module Description

Electrical Information Reference

- Circuit Testing
- Connector Repairs
- Testing for Intermittent Conditions and Poor Connections
- Wiring Repairs

Scan Tool Reference

Control Module References for scan tool information

Circuit/System Verification

Verify DTC C028B is not set.

If DTC is set, perform the Hand brake Calibration procedure in Configuration/Reset Functions. If the DTC resets replace the K83 Hand brake Control Module.

Repair Instructions

Perform the Diagnostic Repair Verification

- Electronic Hand brake Control Module Replacement
- Control Module References

&#169© Copyright Chevrolet. All rights reserved

DTC C028D

Diagnostic Instructions

- Perform the Diagnostic System Check - Vehicle prior to using this diagnostic procedure.
- Review Strategy Based Diagnosis for an overview of the diagnostic approach.
- Diagnostic Procedure Instructions provide an overview of each diagnostic category.

DTC Descriptors

DTC C028D 00: Replace Hand brake Pad Malfunction

Circuit/System Description

The hand brake control module has an internal motor, apply actuator, release actuator, and temperature sensor. The hand brake control module also contains the logic for applying and releasing the hand brake when commanded by the hand brake control switch. When the hand brake control module receives a signal from the switch, the internal circuit board temperature is checked to verify it is within operating range before the control module performs the requested operation.

Conditions for Running the DTC

Ignition OFF, ACCESSORY, or RUN mode.

Conditions for Setting the DTC

The hand brake control module has an internal counter which keeps track of dynamic applies. When the counter reaches the threshold value this DTC will set.

Action Taken When the DTC Sets

A message and/or a warning indicator may be displayed.

Conditions for Clearing the DTC

- The hand brake control module clears the history DTC when a current DTC is not detected in 100 consecutive drive cycles.
- Adjust or replace the hand brake pads.

Reference Information

Schematic Reference

Hand brake System Schematics

Connector End View Reference

Component Connector End Views

Description and Operation

Electronic Hand brake Control Module Description

Electrical Information Reference

- Circuit Testing
- Connector Repairs
- Testing for Intermittent Conditions and Poor Connections
- Wiring Repairs

Scan Tool Reference

Control Module References for scan tool information

Circuit/System Verification

Verify DTC C028D is not set.

If DTC is set, replace the rear brake pads and perform the Hand brake Calibration procedure.

Repair Instructions

Perform the Diagnostic Repair Verification

- Rear Disc Brake Pads Replacement

- Control Module References

&#169© Copyright Chevrolet. All rights reserved

DTC C028F

Diagnostic Instructions

- Perform the Diagnostic System Check - Vehicle prior to using this diagnostic procedure.
- Review Strategy Based Diagnosis for an overview of the diagnostic approach.
- Diagnostic Procedure Instructions provide an overview of each diagnostic category.

DTC Descriptors

DTC C028F 01: Hand brake Solenoid Actuator Circuit Short to Battery

DTC C028F 02: Hand brake Solenoid Actuator Circuit Short to Ground

DTC C028F 08: Hand brake Solenoid Actuator Circuit Performance-Signal Invalid

Circuit/System Description

The hand brake control module has an internal motor, apply actuator, release actuator, and temperature sensor. The hand brake control module also contains the logic for applying and releasing the hand brake when commanded by the hand brake control switch. When the hand brake control module receives a signal from the switch the internal circuit board temperature is checked to verify it is within operating range before the control module performs the requested operation. The hand brake control module contains an internal hand brake solenoid actuator, and performs diagnostics on the solenoid actuator circuitry to verify it is functioning properly

Conditions for Running the DTC

Ignition OFF, ACCESSORY, or RUN mode.

Conditions for Setting the DTC

The hand brake control module detects an internal hand brake solenoid malfunction.

Action Taken When the DTC Sets

- The electric hand brake is disabled, one release allowed.
- A message and/or a warning indicator may be displayed.

Conditions for Clearing the DTC

- The hand brake control module clears the history DTC when a current DTC is not detected in 40 ignition cycles.
- The condition for the DTC is no longer present.

Reference Information

Schematic Reference

Hand brake System Schematics

Connector End View Reference

Component Connector End Views

Description and Operation

Electronic Hand brake Control Module Description

Electrical Information Reference

- Circuit Testing
- Connector Repairs
- Testing for Intermittent Conditions and Poor Connections
- Wiring Repairs

Scan Tool Reference

Control Module References for scan tool information

Circuit/System Verification

Verify that DTC C028F is not set.

If DTC is set, program the hand brake control module. If the DTC resets, replace the K83 Hand brake Control Module.

Repair Instructions

Perform the Diagnostic Repair Verification

- Electronic Hand brake Control Module Replacement
- Control Module References

&#169© Copyright Chevrolet. All rights reserved

DTC C0293

Diagnostic Instructions

- Perform the Diagnostic System Check - Vehicle prior to using this diagnostic procedure.
- Review Strategy Based Diagnosis for an overview of the diagnostic approach.
- Diagnostic Procedure Instructions provide an overview of each diagnostic category.

DTC Descriptors

DTC C0293 01: Hand brake Switch Control Short to Battery

DTC C0293 06: Hand brake Switch Control Low Voltage/Open

DTC C0293 08: Hand brake Switch Control Performance-Signal Invalid

Circuit/System Description

The hand brake control module has an internal motor, apply actuator, release actuator, and temperature sensor. The hand brake control module also contains the logic for applying and releasing the hand brake when commanded by the hand brake control switch. The hand brake control module will perform diagnostics on the hand brake control switch and its wiring harness to verify it is functioning properly. When the hand brake control module receives a signal from the switch the internal circuit board temperature is checked to verify it is within operating range before the control module performs the requested operation.

The hand brake control switch diagnostic checks for failure conditions in the hand brake switch and associated wiring into the hand brake control module.

Conditions for Running the DTC

Vehicle OFF, Vehicle in Service Mode, Vehicle ON, or Engine Running.

Conditions for Setting the DTC

The hand brake control module detects a short to battery, short to ground, open circuit, or an internal hand brake switch control malfunction.

Action Taken When the DTC Sets

- The electric hand brake is disabled.
- A DIC message and/or a warning indicator may be displayed.

Conditions for Clearing the DTC

- The hand brake control module clears the history DTC when a current DTC is not detected in 40 consecutive drive cycles.
- The condition for the DTC is no longer present.

Reference Information

Schematic Reference

Hand brake System Schematics

Connector End View Reference

Component Connector End Views

Description and Operation

Electronic Hand brake Control Module Description

Electrical Information Reference

- Circuit Testing
- Connector Repairs
- Testing for Intermittent Conditions and Poor Connections
- Wiring Repairs

Scan Tool Reference

Control Module References for scan tool information

Circuit/System Test

C0293 01 or C0293 06

1. Vehicle OFF, disconnect the harness at the S91 Electric Hand Brake Switch.
2. Verify that a test lamp illuminates between the B+ circuit terminal listed below and ground:
   - Terminal 4
   - Terminal 5

   If the test lamp does not illuminate, test the B+ circuit for a short to ground or an open/high resistance. If the circuit tests normal, replace the K83 Electric Hand brake Control Module.
3. Reconnect the harness at the S91 Electric Hand brake Switch. Disconnect the harness at the K83 Electric Hand brake Control Module.
4. Test for less than 1 V between the circuit terminal listed below and ground:
   - Terminal R
   - Terminal S

   If greater than the specified range, test the circuit for a short to voltage. If the circuit tests normal, replace the S91 Electric Hand Brake Switch.
5. Vehicle in Service Mode, test for less than 1 V between the following signal circuit terminals at the electric hand brake switch harness connector and ground:
   - Terminal 2
   - Terminal 3
   - Terminal 7

   If greater than the specified range, test the signal circuit for a short to voltage.
6. Test for infinite resistance between the signal circuits listed below and ground:
   - Terminal 2
   - Terminal 3
   - Terminal 7

   If less than the specified value, test the signal circuit for a short to ground.
7. Test for less than 5 Ω between the following signal circuit terminals:
   - Electric hand brake switch harness terminal 1 and the electric hand brake control module terminal N
   - Electric hand brake switch harness terminal 2 and the electric hand brake control module terminal C
   - Electric hand brake switch harness terminal 3 and the electric hand brake control module terminal B
   - Electric hand brake switch harness terminal 7 and the electric hand brake control module terminal D

   If greater than the specified range, test the signal circuit for an open/high resistance.
8. If all circuits test normal, test or replace the S91 Electric Hand brake Switch. If DTC resets, replace the K83 Electric Hand brake Control Module.

C0293 08

Remove the electric hand brake fuse and reinstall. Verify DTC C0293 08 is not set.

If DTC C0293 08 is set, replace the S91 Electric Hand brake Switch.

Component Testing

1. Vehicle OFF, disconnect the harness connector at the hand brake control switch.
2. Test for infinite resistance between the terminals listed below with the switch in the inactive state:
   - B+ terminal 4 and the hand brake control switch signal terminal 1
   - B+ terminal 4 and the hand brake control switch signal terminal 2
   - B+ terminal 5 and the hand brake control switch signal terminal 1
   - B+ terminal 5 and the hand brake control switch signal terminal 2
   - Hand brake control switch signal terminal 3 and the hand brake control switch signal terminal 1
   - Hand brake control switch signal terminal 3 and the hand brake control switch signal terminal 2
   - Hand brake control switch signal terminal 7 and the hand brake control switch signal terminal 1
   - Hand brake control switch signal terminal 7 and the hand brake control switch signal terminal 2

   If less than the specified range, replace the S91 hand brake control switch.
3. Test for less than 5 Ω between the terminals listed below with the switch in the inactive state:
   - Hand brake control switch signal terminal 1 and terminal 2
   - B+ terminal 4 and hand brake control switch signal terminal 7
   - B+ terminal 5 and hand brake control switch signal terminal 3

   If greater than the specified range, replace the S91 hand brake control switch.
4. Test for less than 5 Ω between the terminals listed below with the switch in the apply position:
   - Hand brake switch signal terminal 1 and terminal 2
   - B+ terminal 4 and hand brake switch signal terminal 1
   - B+ terminal 4 and hand brake switch signal terminal 2
   - B+ terminal 5 and hand brake switch signal terminal 3

   If greater than the specified range, replace the S91 hand brake control switch.
5. Test for less than 5 Ω between the terminals listed below with the switch in the apply position:
   - Hand brake control switch signal terminal 1 and terminal 2
   - B+ terminal 5 and hand brake control switch signal terminal 1
   - B+ terminal 5 and hand brake control switch signal terminal 2
   - B+ terminal 4 and hand brake control switch signal terminal 7

   If greater than the specified range, replace the S91 hand brake control switch.

Repair Instructions

Perform the Diagnostic Repair Verification after completing the diagnostic procedure.

- Hand brake Switch Replacement
- Control Module References for hand brake module replacement, programming and setup

&#169© Copyright Chevrolet. All rights reserved

DTC C0298

Diagnostic Instructions

- Perform the Diagnostic System Check - Vehicle prior to using this diagnostic procedure.
- Review Strategy Based Diagnosis for an overview of the diagnostic approach.
- Diagnostic Procedure Instructions provide an overview of each diagnostic category.

DTC Descriptors

DTC C0298 00: Hand brake Unlatch Switch Circuit Malfunction

Circuit/System Description

The hand brake control module has an internal motor, apply actuator, release actuator, and temperature sensor. The hand brake control module also contains the logic for applying and releasing the hand brake when commanded by the hand brake control switch. When the hand brake control module receives a signal from the switch, the internal circuit board temperature is checked to verify it is within operating range before the control module performs the requested operation.

Conditions for Running the DTC

Ignition OFF, ACCESSORY, or RUN mode.

Conditions for Setting the DTC

The hand brake control module detects the apply or release button was activated for more than 90 seconds.

Action Taken When the DTC Sets

A message and/or a warning indicator may be displayed.

Conditions for Clearing the DTC

- The hand brake control module clears the history DTC when a current DTC is not detected in 40 ignition cycles.
- The condition for the DTC is no longer present.
- The hand brake control switch button is released using the scan tool.

Diagnostic Aids

Check if the hand brake control switch is stuck in the apply or release position which may cause the DTC to set.

Reference Information

Schematic Reference

Hand brake System Schematics

Connector End View Reference

Component Connector End Views

Description and Operation

Electronic Hand brake Control Module Description

Electrical Information Reference

- Circuit Testing
- Connector Repairs
- Testing for Intermittent Conditions and Poor Connections
- Wiring Repairs

Scan Tool Reference

Control Module References for scan tool information

Circuit/System Verification

1. Verify DTC C0293 is not set.
   If DTC C0293 is set, refer to DTC C0293 .
2. Command the Hand brake Cable Service Release to Released with a scan tool. The BRAKE light should turn off and the Hand brake Status on the scan tool should display Released.

If the BRAKE light does not turn off or the Hand brake Status does not display Released replace the K83 Hand brake Control Module.

Repair Instructions

Perform the Diagnostic Repair Verification

- Electronic Hand brake Control Module Replacement
- Control Module References

&#169© Copyright Chevrolet. All rights reserved

DTC C0558

Diagnostic Instructions

- Perform the Diagnostic System Check - Vehicle prior to using this diagnostic procedure.
- Review Strategy Based Diagnosis for an overview of the diagnostic approach.
- Diagnostic Procedure Instructions provide an overview of each diagnostic category.

DTC Descriptors

DTC C0558 55: Calibration Data Too Few Transitions

DTC C0558 5A: Calibration Data Not Plausible

Circuit/System Description

The hand brake control module has an internal motor, apply actuator, release actuator, and temperature sensor. The hand brake control module also contains the logic for applying and releasing the hand brake when commanded by the hand brake control switch. When the hand brake control module receives a signal from the switch the internal circuit board temperature is checked to verify it is within operating range before the control module performs the requested operation.

Conditions for Running the DTC

Ignition OFF, ACCESSORY, or RUN mode.

Conditions for Setting the DTC

C0558 55

The hand brake control module detects a calibration malfunction.

C0558 5A

The hand brake control module detects mechanical problems with the hand brake system.

Action Taken When the DTC Sets

C0558 55

- The electric hand brake is disabled, switch command will not be accepted.
- A message and/or a warning indicator may be displayed.

C0558 5A

- The electric hand brake is disabled, one release allowed.
- A message and/or a warning indicator may be displayed.

Conditions for Clearing the DTC

- The hand brake control module clears the history DTC when a current DTC is not detected in 40 ignition cycles.
- Calibrate the hand brake control module.

Diagnostic Aids

- Verify the hand brake control module software and calibrations are the newest available versions.
- Verify the hand brake cable is not broken or pinched.

Reference Information

Schematic Reference

Hand brake System Schematics

Connector End View Reference

Component Connector End Views

Description and Operation

Electronic Hand brake Control Module Description

Electrical Information Reference

- Circuit Testing
- Connector Repairs
- Testing for Intermittent Conditions and Poor Connections
- Wiring Repairs

Scan Tool Reference

Control Module References for scan tool information

Circuit/System Verification

1. Ignition ON, command the Hand brake Cable Service Apply ON with a scan tool. Verify the Hand brake Cable Position parameter is below 1250 counts.
   If greater than the specified value, make sure the hand brake cable is connected properly and check hand brake linings for excessive wear, and ensure proper clearance to drum.
2. Verify DTC C0558 is not set.
   If DTC is set, perform the Hand brake Calibration procedure in Configuration/Reset Functions.

Repair Instructions

Perform the Diagnostic Repair Verification after completing the diagnostic procedure.

Control Module References for hand brake control module replacement, setup, and programming

&#169© Copyright Chevrolet. All rights reserved

DTC C0561

Diagnostic Instructions

- Perform the Diagnostic System Check - Vehicle prior to using this diagnostic procedure.
- Review Strategy Based Diagnosis for an overview of the diagnostic approach.
- Diagnostic Procedure Instructions provide an overview of each diagnostic category.

DTC Descriptors

DTC C0561 71: System Disabled Information Stored-Invalid Serial Data Received

Circuit/System Description

The hand brake control module has an internal motor, apply actuator, release actuator, and temperature sensor. The hand brake control module also contains the logic for applying and releasing the hand brake when commanded by the hand brake control switch. When the hand brake control module receives a signal from the switch the internal circuit board temperature is checked to verify it is within operating range before the control module performs the requested operation. The hand brake module will verify it has a valid signal from other modules before it performs the requested operation.

Conditions for Running the DTC

- Ignition OFF, ACCESSORY, or RUN mode.
- Battery voltage is between 9-16V

Conditions for Setting the DTC

The hand brake control module receives an invalid serial data message or does not receive a serial data message from another module.

Action Taken When the DTC Sets

- A message and/or a warning indicator may be displayed.
- The electric hand brake functionality is degraded.

Conditions for Clearing the DTC

- The hand brake control module clears the history DTC when a current DTC is not detected in 40 ignition cycles.
- The hand brake control module receives Valid signals from other modules.

Reference Information

Schematic Reference

Hand brake System Schematics

Connector End View Reference

Component Connector End Views

Description and Operation

Electronic Hand brake Control Module Description

Electrical Information Reference

- Circuit Testing
- Connector Repairs
- Testing for Intermittent Conditions and Poor Connections
- Wiring Repairs

Scan Tool Reference

Control Module References for scan tool information

Circuit/System Verification

1. Using the scan tool, locate the Invalid parameter in the Data Display.
2. Refer to the appropriate module to diagnose the invalid data signal. Do not replace the electric hand brake control module.

Repair Instructions

Perform the Diagnostic Repair Verification after completing the diagnostic procedure.

&#169© Copyright Chevrolet. All rights reserved

DTC C0574

Diagnostic Instructions

- Perform the Diagnostic System Check - Vehicle prior to using this diagnostic procedure.
- Review Strategy Based Diagnosis for an overview of the diagnostic approach.
- Diagnostic Procedure Instructions provide an overview of each diagnostic category.

DTC Descriptors

DTC C0574 01: Circuit Board Temperature Sensor Short to Battery

DTC C0574 02: Circuit Board Temperature Sensor Short to Ground

DTC C0574 54: Circuit Board Temperature Sensor High

Circuit/System Description

The hand brake control module has an internal motor, apply actuator, release actuator, and temperature sensor. The hand brake control module also contains the logic for applying and releasing the hand brake when commanded by the hand brake control switch. When the hand brake control module receives a signal from the switch the internal circuit board temperature is checked to verify it is within operating range before the control module performs the requested operation.

Conditions for Running the DTC

Ignition OFF, ACCESSORY, or RUN mode.

Conditions for Setting the DTC

C0574 01, C0574 02

The hand brake control module detects a short-circuit to battery or a short-circuit to ground.

C0574 54

The hand brake control module has detected an internal temperature that is above the allowed value.

Action Taken When the DTC Sets

- A message and/or a warning indicator may be displayed.
- The electric hand brake is disabled, one release allowed.

Conditions for Clearing the DTC

- The hand brake control module clears the history DTC when a current DTC is not detected in 40 ignition cycles.
- The hand brake control module is replaced or the internal temperature drops below the allowed temperature.

Diagnostic Aids

Check for debris on the hand brake control module which may cause the module to overheat.

Reference Information

Schematic Reference

Hand brake System Schematics

Connector End View Reference

Component Connector End Views

Description and Operation

Electronic Hand brake Control Module Description

Electrical Information Reference

- Circuit Testing
- Connector Repairs
- Testing for Intermittent Conditions and Poor Connections
- Wiring Repairs

Scan Tool Reference

Control Module References for scan tool information

Circuit/System Verification

C0574 01 or C0574 02

Remove the EHB fuse and reinstall. Verify DTC C0574 is not set.

If DTC is set, replace the K83 Hand brake Control Module.

C0574 54

Note: Diagnose all other hand brake control module system related faults before performing this diagnostic. Other faults may cause the circuit board to overheat. Do not attempt to apply the electric hand brake.

1. Allow the hand brake control module to cool down for 15 minutes.
2. Verify DTC C0574 54 is not set.
   If DTC is set, replace the K83 Hand brake Control Module.

Repair Instructions

Perform the Diagnostic Repair Verification

- Electronic Hand brake Control Module Replacement
- Control Module References

&#169© Copyright Chevrolet. All rights reserved

Symptoms - Hand brake

Important: Review the system operation in order to familiarise yourself with the system functions.

Refer to Electronic Hand brake Control Module Description .

Visual/Physical Inspection

- Inspect for aftermarket devices which could affect the operation of the hand brake system.
- Inspect the easily accessible or visible system components for obvious damage or conditions which could cause the symptom.

Symptom List

Refer to a symptom diagnostic procedure from the following list in order to diagnose the symptom:

Hand brake Will Not Hold or Release

&#169© Copyright Chevrolet. All rights reserved

Hand brake Will Not Hold or Release

Step	Action	Yes	No
1	Were you sent here from the Hand brake Symptom table?	Go to Step 2	Go to Diagnostic Starting Point - Vehicle
2	Inspect the hand brake system for proper operation. Refer to Hand brake System Diagnosis . Did you find and correct a condition?	Go to Step 5	Go to Step 3
3	Inspect the disc brake system for proper operation. Refer to Disc Brake System Diagnosis . Did you find and correct a condition?	Go to Step 5	Go to Step 4
4	Inspect the hydraulic brake system for proper operation. Refer to Brake Hydraulic and Assist System Diagnosis . Did you find and correct a condition?	Go to Step 5	Go to Diagnostic Starting Point - Vehicle
5	Road test the vehicle in order to confirm proper operation. Refer to Brake System Vehicle Road Test . Is the condition still present?	Go to Step 2	System OK

© Copyright Chevrolet. All rights reserved

Hand brake System Diagnosis

Step	Action	Yes	No
DEFINITION: This diagnostic table is designed to diagnose ONLY the mechanical components of the Hand brake system in order to determine if the Hand brake system is operating properly. You will be directed by the appropriate Symptom table to go to other brake system diagnostic tables as appropriate.			
1	Were you sent here from a Hydraulic Brake Symptom table?	Go to Step 4	Go to Step 2
2	Were you sent here from a Hand brake Symptom table?	Go to Step 4	Go to Step 3
3	**Danger:** Do not use a service jack in locations other than those specified to lift this vehicle. Lifting the vehicle with a jack in those other locations could cause the vehicle to slip off the jack and roll; this could cause injury or death. 1. Raise and support the vehicle with the rear axle supported by axle stands. Refer to Lifting and Jacking the Vehicle . 2. With the hand brake RELEASED, attempt to rotate the rear wheels to check the rear brakes for a significant amount of drag. Do the rear brakes have a significant amount of drag?	Go to Step 7	Go to Step 4
4	1. Apply the hand brake. 2. Attempt to rotate the rear wheels to check the rear brakes for a significant amount of drag. Do the rear brakes have a significant amount of drag?	Go to Step 12	Go to Step 5
5	Visually inspect the hand brake cable connections and the cables that are accessible on the UNDERSIDE of the vehicle for disconnections and/or damage. Were any of the hand brake cables disconnected and/or damaged?	Go to Step 6	Go to Step 7
6	Reconnect or replace the hand brake cables as necessary. Refer to Hand brake Cable Replacement , or Hand brake Rear Cable Replacement - Left Side , or Hand brake Rear Cable Replacement - Right Side . Did you complete the repair and/or replacement?	Go to Step 12	--
7	1. Disconnect the rear hand brake cables from the equaliser and from the brake calliper piston apply levers. Refer to Hand brake Rear Cable Replacement - Left Side and Hand brake Rear Cable Replacement - Right Side . 2. Have an assistant apply and maintain the calliper piston apply lever to apply the calliper piston. 3. Attempt to rotate the rear wheels to check the rear brakes for a significant amount of drag. 4. Release the calliper piston apply lever. 5. Repeat steps 2-4 for the opposite calliper piston apply lever.		

	6. Rotate the rear wheels to check the brake for a significant reduction of drag. Did the brake callipers apply and release properly?	Go to Step 9	Go to Step 8
8	Replace the appropriate rear brake calliper. Refer to Rear Brake Calliper Replacement . Did you complete the replacement?	Go to Step 12	--
9	With the aid of an assistant, apply and release the hand brake while observing the cables for free movement. Did the hand brake cables move freely?	Go to Step 11	Go to Step 10
10	Replace any of the hand brake cables inspected that do not have free movement. Refer to Hand brake Cable Replacement , or Hand brake Rear Cable Replacement - Left Side , or Hand brake Rear Cable Replacement - Right Side . Did you complete the replacement?	Go to Step 12	--
11	Inspect the electronic hand brake control module for proper operation and replace if necessary. Refer to Electronic Hand brake Control Module Replacement . Did you complete the replacement?	Go to Step 12	--
12	Install or connect any components that were removed or disconnected during diagnosis. Did you complete the operation?	Hand brake System OK	--

© Copyright Chevrolet. All rights reserved

Electronic Hand brake Control Module Replacement

Removal Procedure

1. Place the transmission in PARK.
2. Disable the hand brake cable adjuster. Refer to Hand brake Cable Adjuster Disabling .
3. Place the power button in the OFF position.

   Danger: Do not use a service jack in locations other than those specified to lift this vehicle. Lifting the vehicle with a jack in those other locations could cause the vehicle to slip off the jack and roll; this could cause injury or death.

4. Raise and support the vehicle. Refer to Lifting and Jacking the Vehicle .
5. Remove the left rear tyre and wheel assembly. Refer to Tyre and Wheel Removal and Installation .
6. Remove the left rear wheelhouse panel liner. Refer to Rear Wheelhouse Panel Liner Replacement .

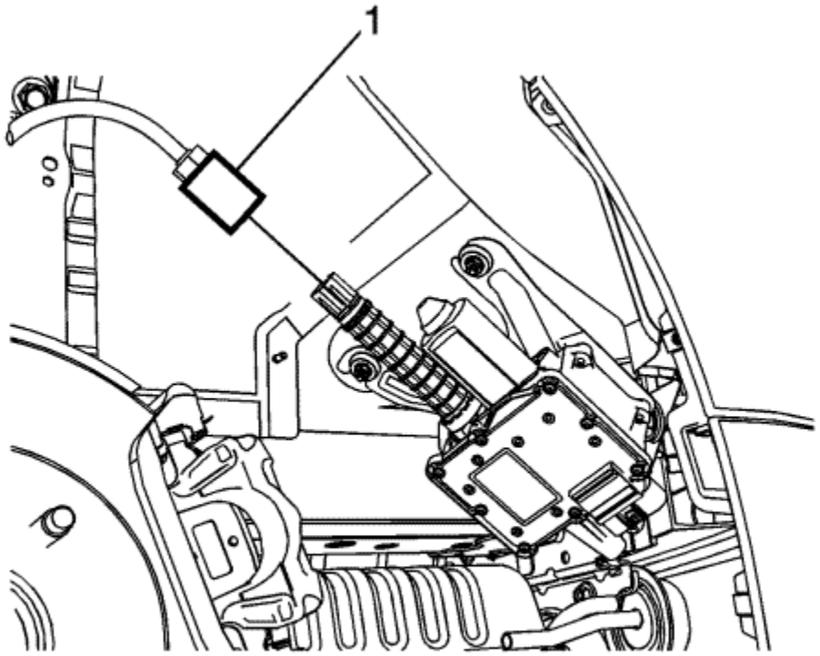

7. Remove the hand brake cable nut (1) from the electronic hand brake control module.
8. Disconnect the electronic hand brake control module electrical connector.

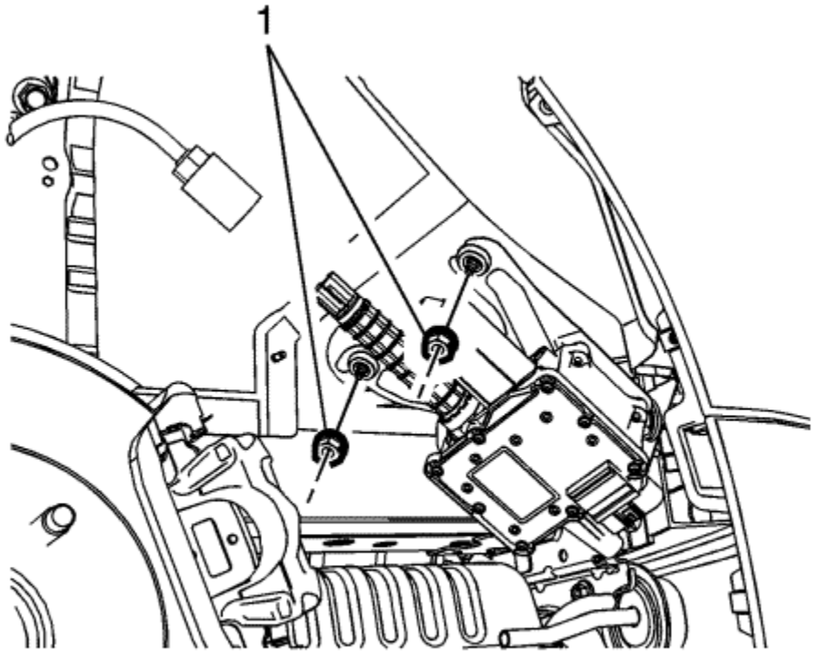

9. Remove the electronic hand brake control module nuts (1).

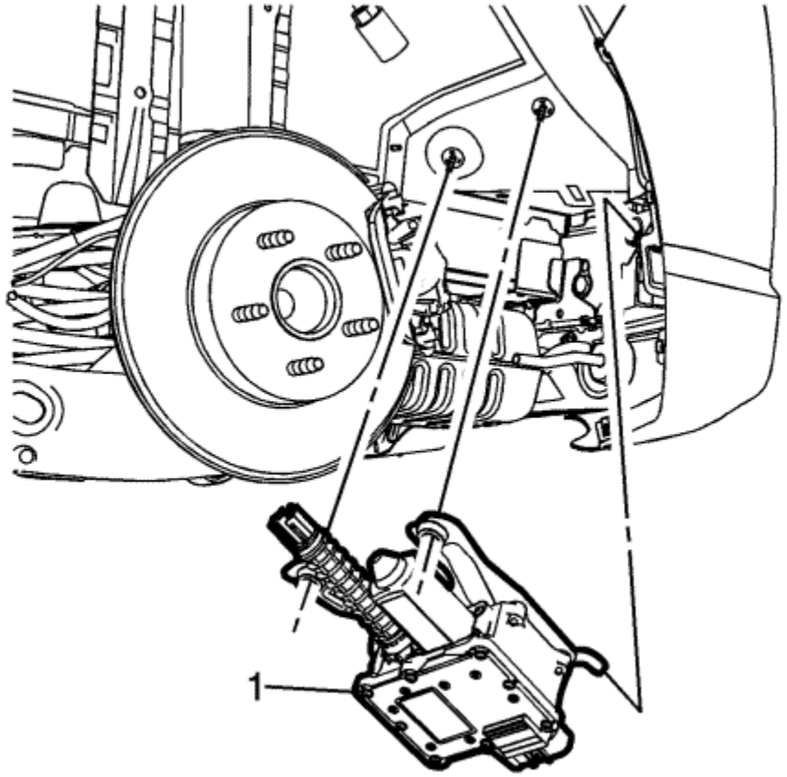

10. Lower the front of the electronic hand brake control module (1) and release the module from the grommet in the vehicle body.
11. Remove the electronic hand brake control module.

Installation Procedure

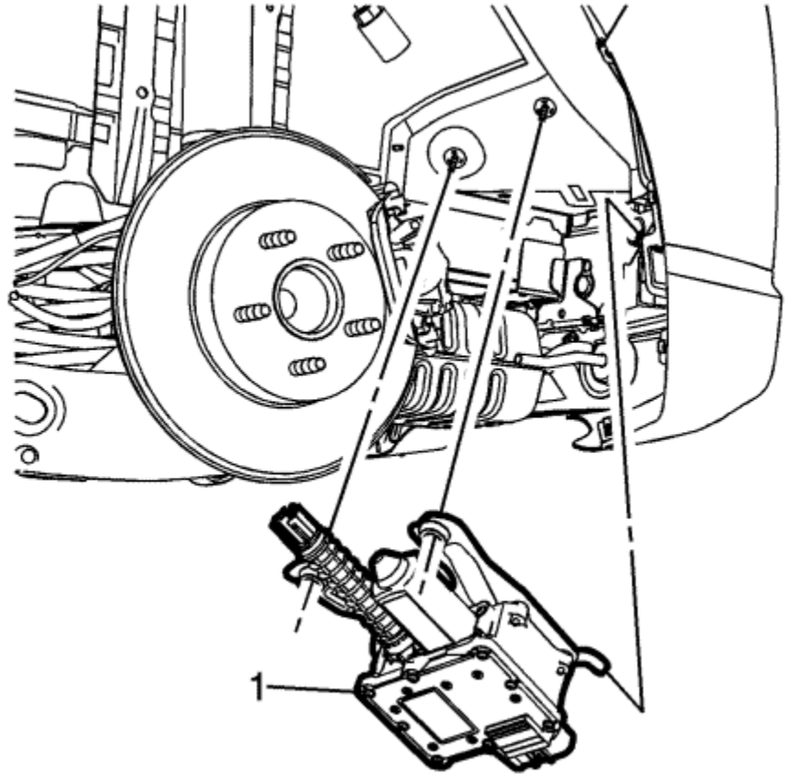

1. Insert the electronic hand brake control module (1) hanger into the grommet in the vehicle body.
2. Raise the front of the electronic hand brake control module and install onto the studs in the vehicle body.

Caution: Refer to Fastener Caution in the Preface section.

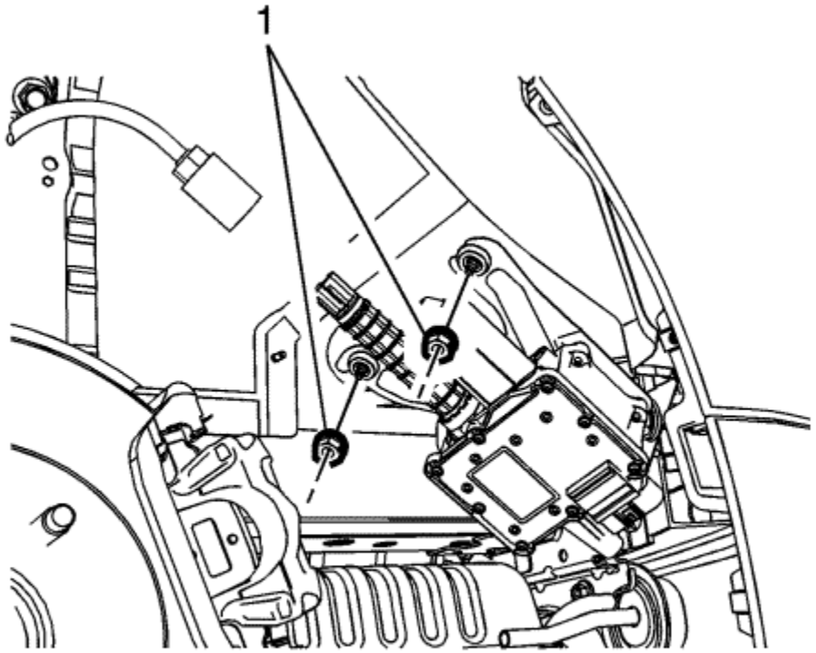

3. Install the electronic hand brake control module nuts (1) and tighten to **10 N·m (89 lb in)**.
4. Connect the electronic hand brake control module electrical connector.

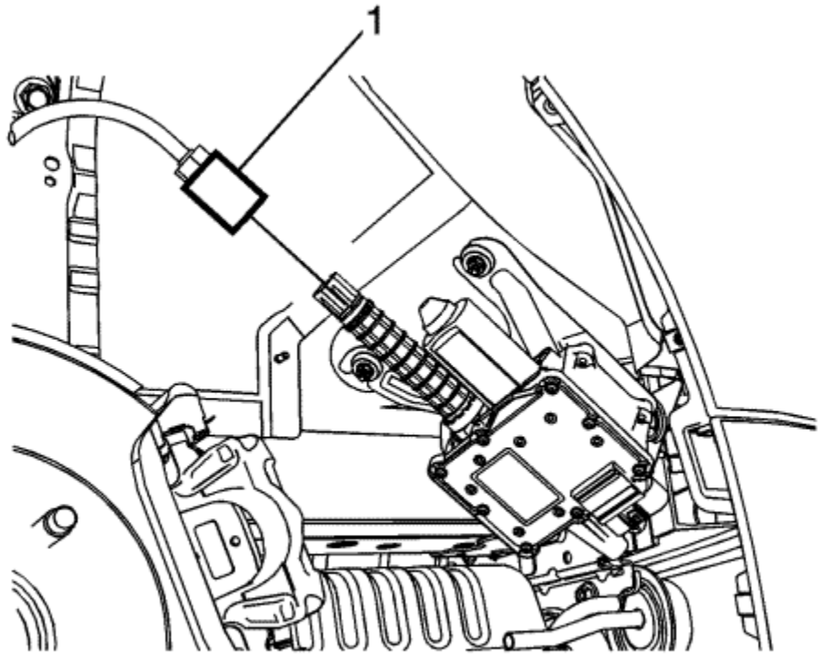

5. Install the hand brake cable nut (1) to the electronic hand brake control module and tighten to **6 N·m (53 lb in)**.
6. Install the left rear wheelhouse panel liner. Refer to Rear Wheelhouse Panel Liner Replacement .
7. Install the left rear tyre and wheel assembly. Refer to Tyre and Wheel Removal and Installation .
8. Enable the hand brake cable adjuster. Refer to Hand brake Cable Adjuster Enabling .
9. Program the electronic hand brake control module. Refer to Electronic Hand brake Control Module Programming and Setup

© Copyright Chevrolet. All rights reserved

Hand brake Switch Replacement

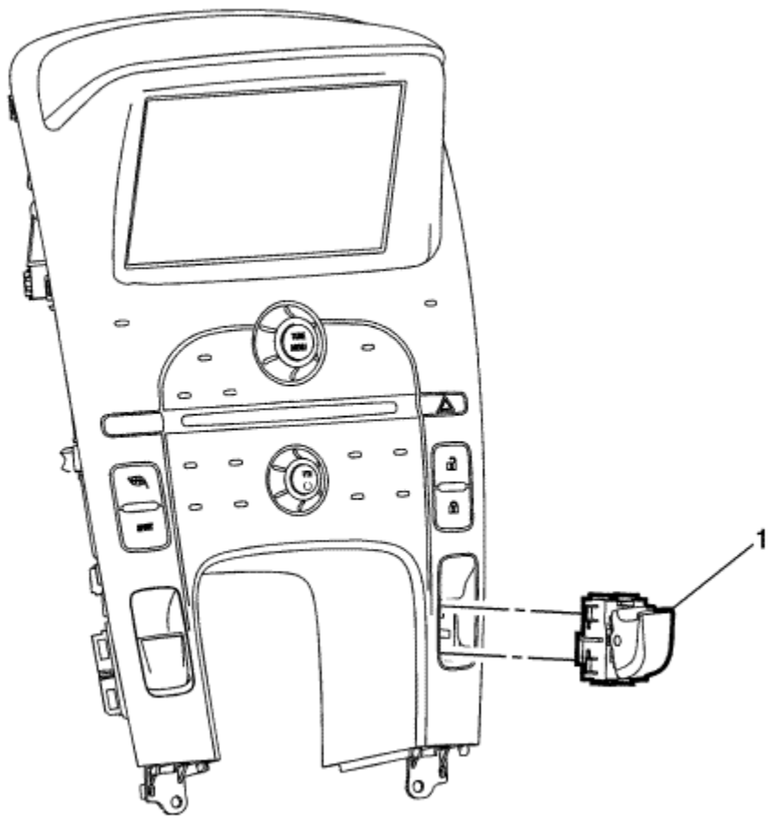

Callout	Component Name
Preliminary Procedure Remove the radio control assembly. Refer to Radio Control Assembly Replacement .	
	Hand Brake Switch

1	**Procedure** 1. Disconnect electrical connection. 2. Depress tabs on switch and remove from the panel.

© Copyright Chevrolet. All rights reserved

Hand brake Cable Replacement

Removal Procedure

1. Place the transmission in PARK.
2. Disable the hand brake cable adjuster. Refer to Hand brake Cable Adjuster Disabling .
3. Place the power button in the OFF position.

   Danger: Do not use a service jack in locations other than those specified to lift this vehicle. Lifting the vehicle with a jack in those other locations could cause the vehicle to slip off the jack and roll; this could cause injury or death.

4. Raise and support the vehicle. Refer to Lifting and Jacking the Vehicle .
5. Remove the left rear tyre and wheel assembly. Refer to Tyre and Wheel Removal and Installation .
6. Remove the left rear wheelhouse panel liner. Refer to Rear Wheelhouse Panel Liner Replacement .

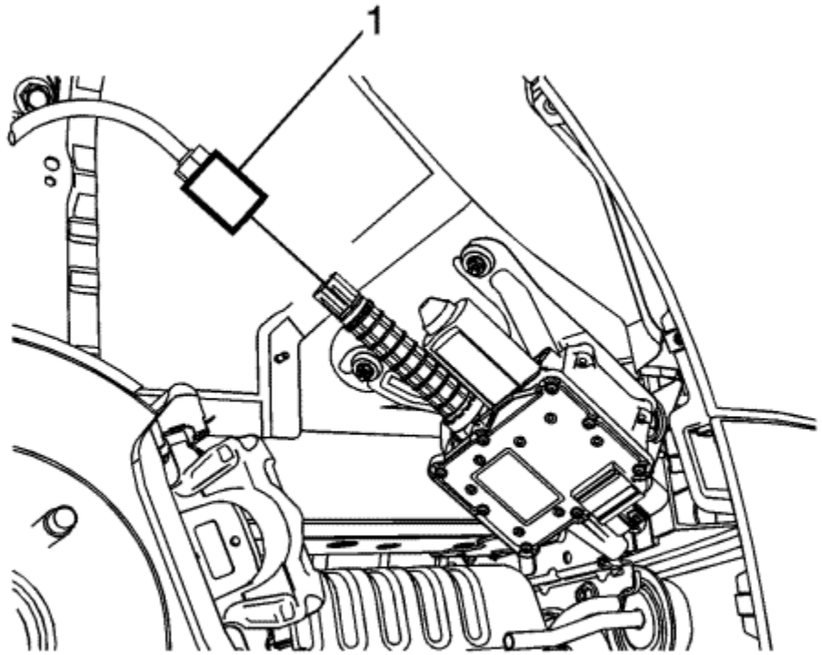

7. Remove the hand brake cable nut (1) from the electronic hand brake control module.

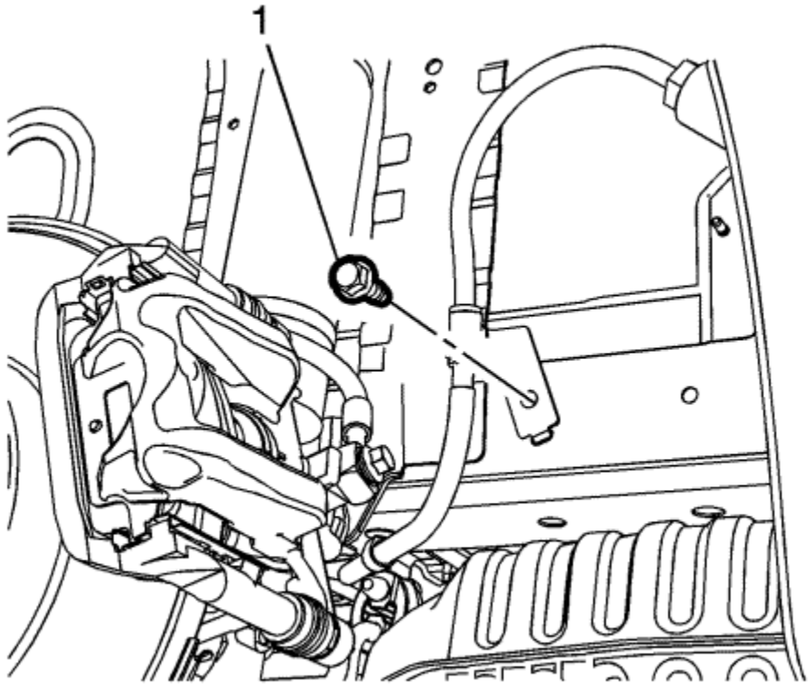

8. Remove the hand brake cable bracket bolt (1).

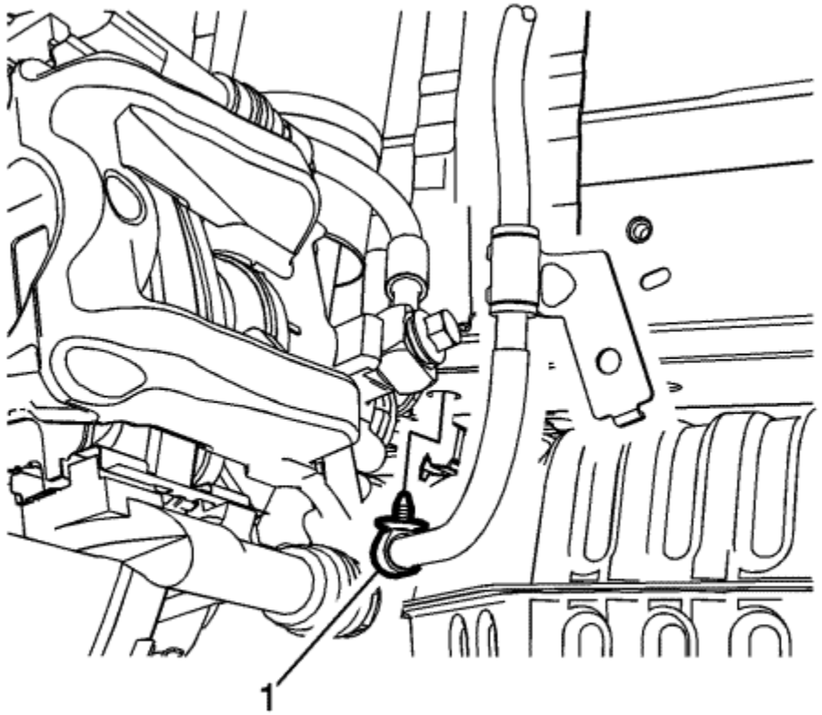

9. Release the hand brake cable bracket bolt (1) from the vehicle underbody.
10. Remove the fasteners and position aside the evaporative emission canister and bracket assembly. Refer to Evaporative Emission Canister Vent Solenoid Valve Replacement .

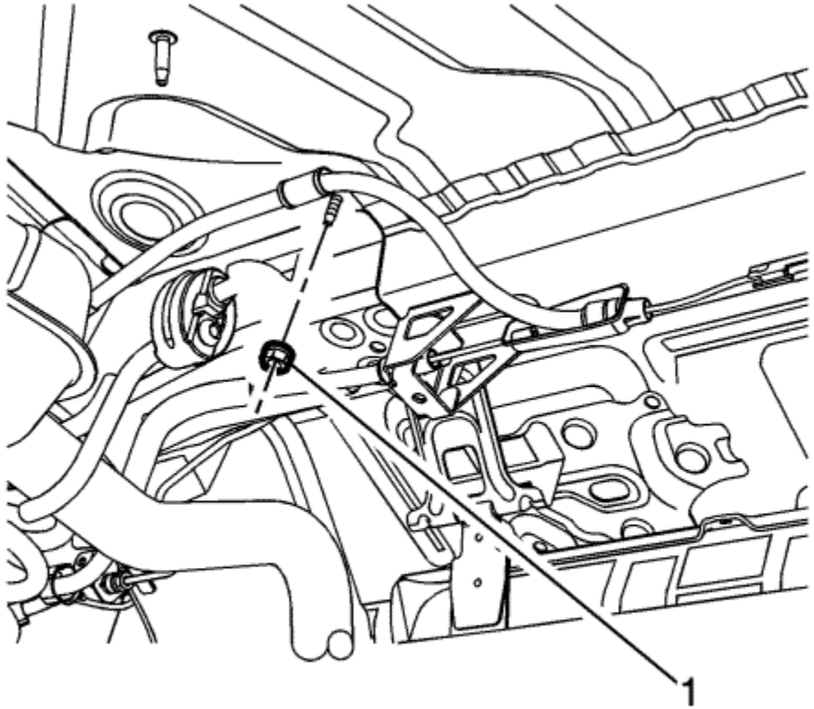

11. Remove the hand brake cable bracket nut (1).

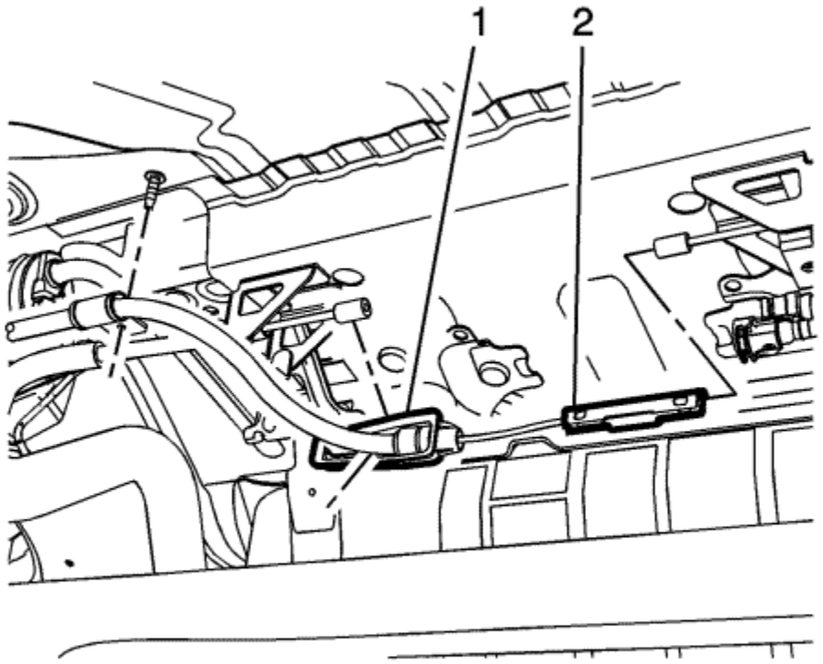

12. Disconnect the hand brake cable equaliser (1) from the left rear hand brake cable.
13. Disconnect the hand brake cable connector (2) from the right rear hand brake cable.
14. Remove the hand brake cable from the vehicle.

Installation Procedure

1. Install the hand brake cable to the vehicle.

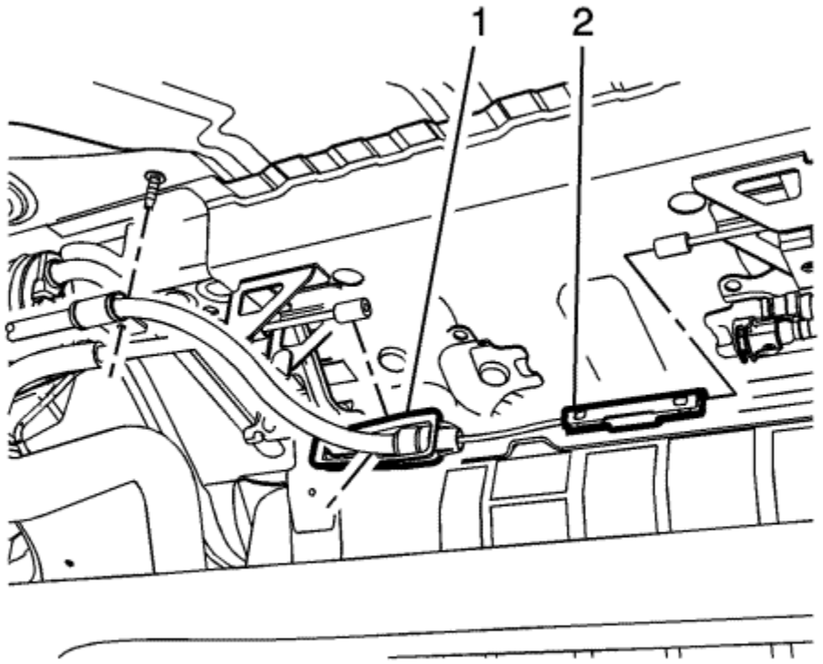

2. Connect the hand brake cable equaliser (1) to the left rear hand brake cable.
3. Connect the hand brake cable connector (2) to the right rear hand brake cable.

Caution: Refer to Fastener Caution in the Preface section.

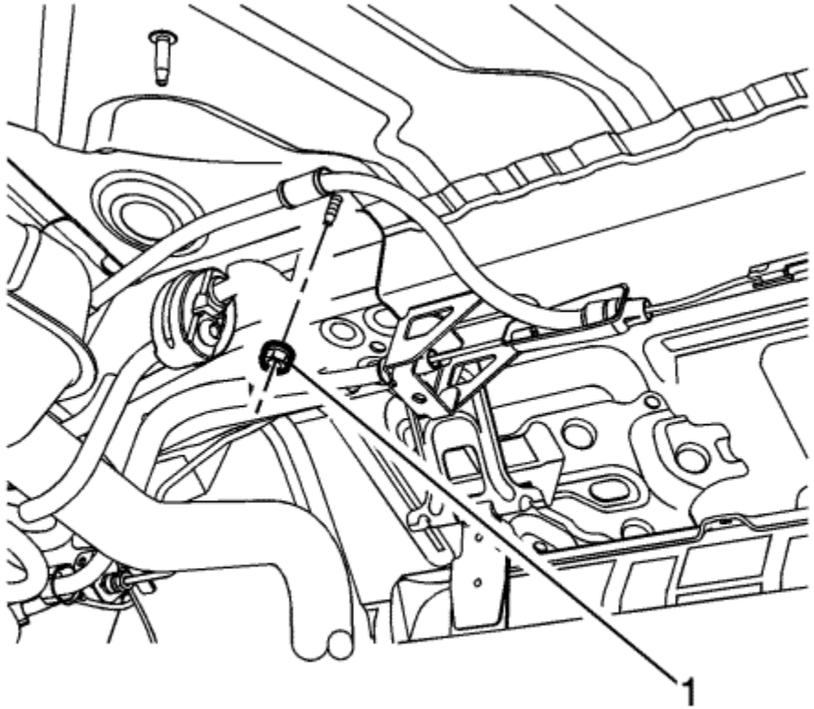

4. Install the hand brake cable bracket nut (1) and tighten to **10 N·m (89 lb in)**.
5. Install the evaporative emission canister and bracket assembly. Refer to Evaporative Emission Canister Vent Solenoid Valve Replacement .

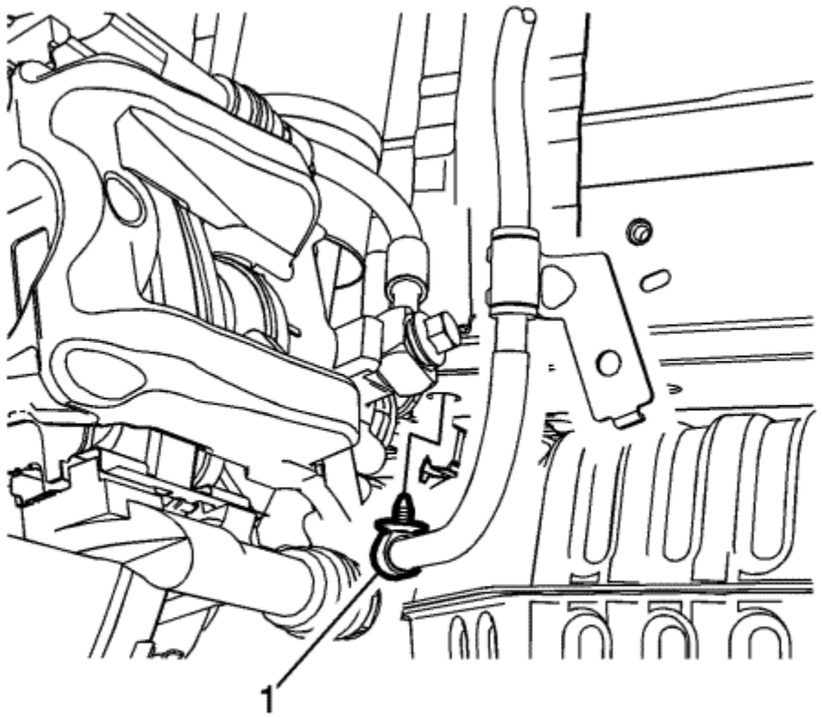

6. Install the hand brake cable bracket nut (1) and tighten to **10 N·m (89 lb in)**.

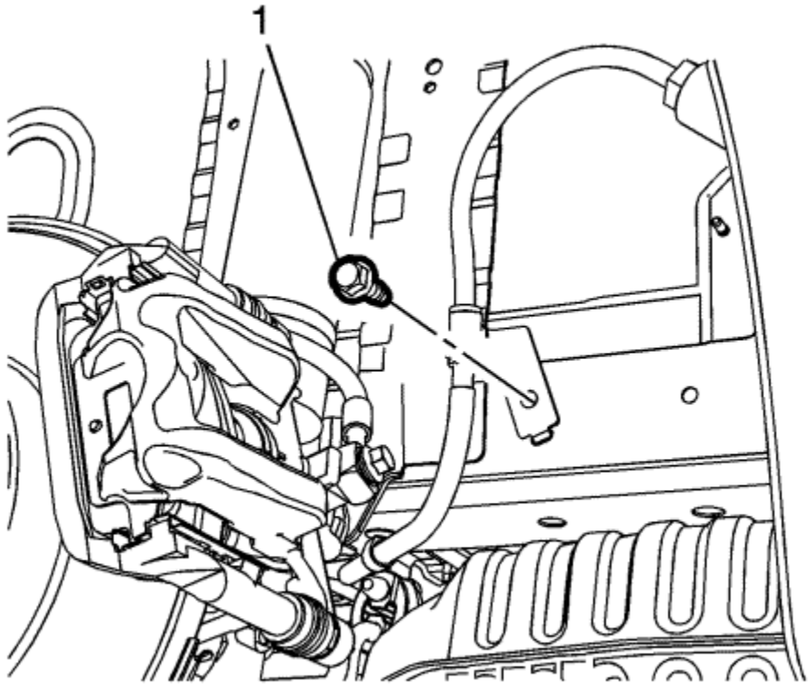

7. Install the hand brake cable bracket bolt (1) and tighten to **10 N·m (89 lb in)**.

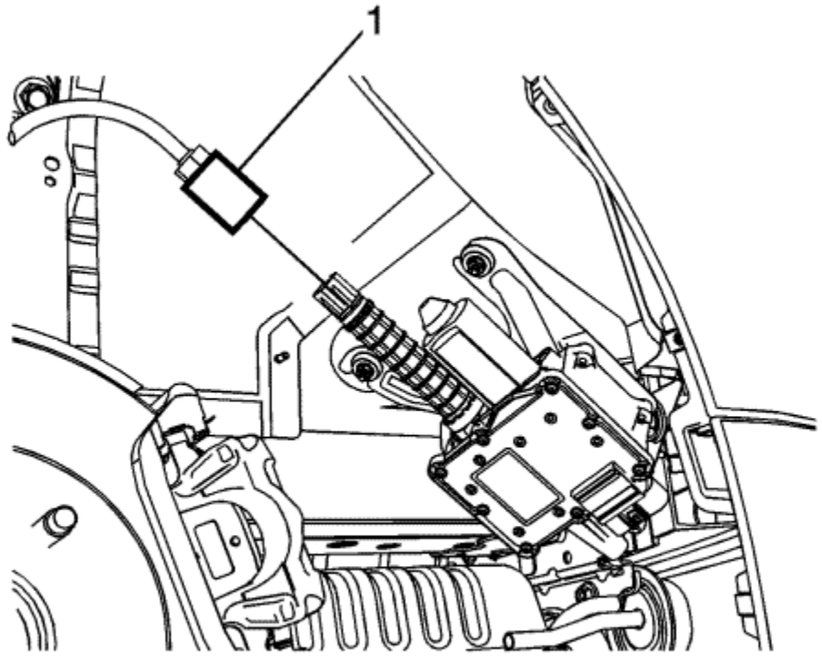

8. Install the hand brake cable nut (1) to the electronic hand brake control module and tighten to **6 N·m (53 lb in)**.
9. Install the left rear wheelhouse panel liner. Refer to Rear Wheelhouse Panel Liner Replacement .
10. Install the left rear tyre and wheel assembly. Refer to Tyre and Wheel Removal and Installation .
11. Enable the hand brake cable adjuster. Refer to Hand brake Cable Adjuster Enabling .

© Copyright Chevrolet. All rights reserved

Hand brake Rear Cable Replacement - Left Side

Removal Procedure

1. Place the transmission in PARK.
2. Disable the hand brake cable adjuster. Refer to Hand brake Cable Adjuster Disabling .
3. Place the power button in the OFF position.

   Danger: Do not use a service jack in locations other than those specified to lift this vehicle. Lifting the vehicle with a jack in those other locations could cause the vehicle to slip off the jack and roll; this could cause injury or death.

4. Raise and support the vehicle. Refer to Lifting and Jacking the Vehicle .

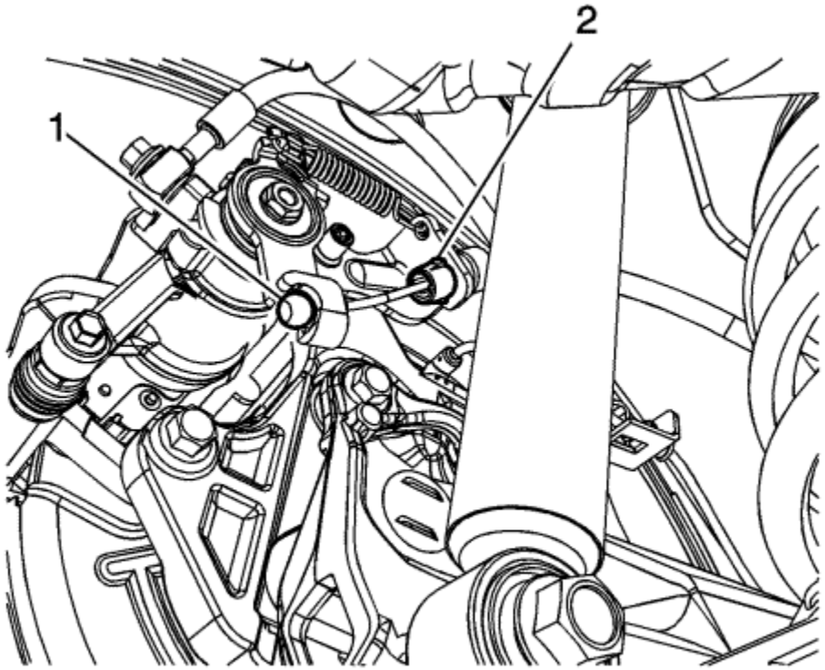

5. Disconnect the left rear hand brake cable from the actuator lever (1) on the brake calliper.
6. Compress the locking tabs on the left rear hand brake cable conduit (2) and remove the hand brake cable from the bracket.

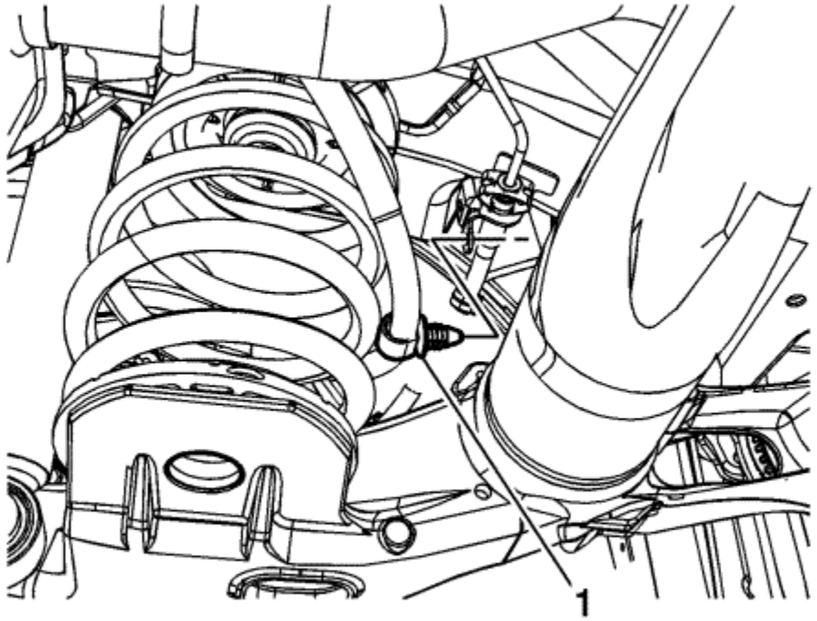

7. Release the left rear hand brake cable retainer (1) from the hydraulic brake pipe bracket.

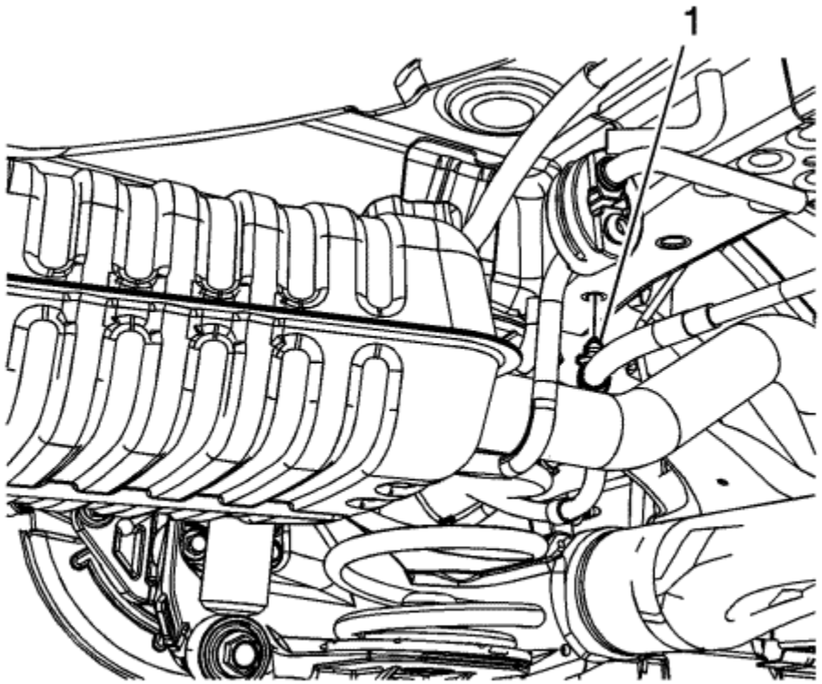

8. Release the hand brake cable retainer (1) from the vehicle underbody.
9. Remove and position aside the evaporative emission canister and bracket assembly. Refer to Evaporative Emission Canister Vent Solenoid Valve Replacement .

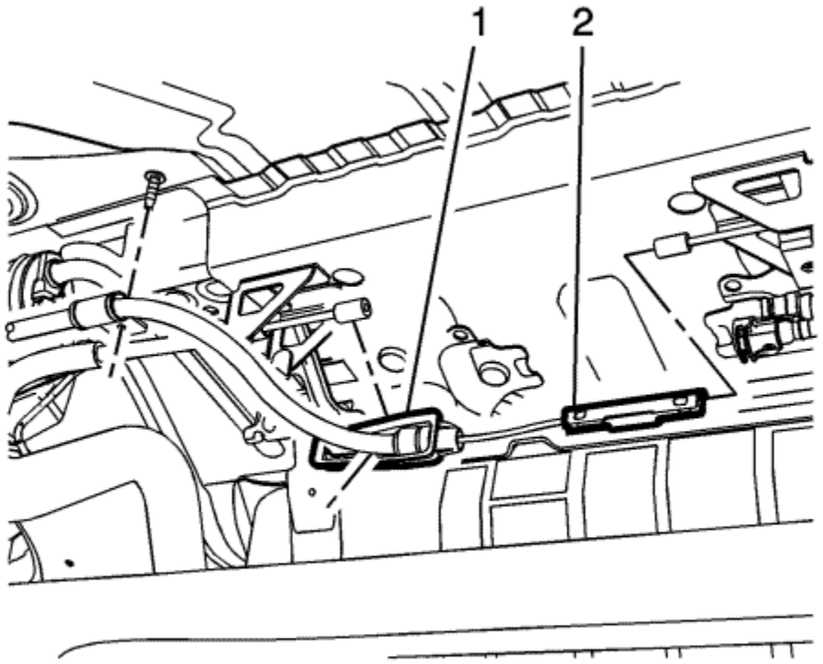

10. Disconnect the hand brake cable equaliser (1) from the left rear hand brake cable.

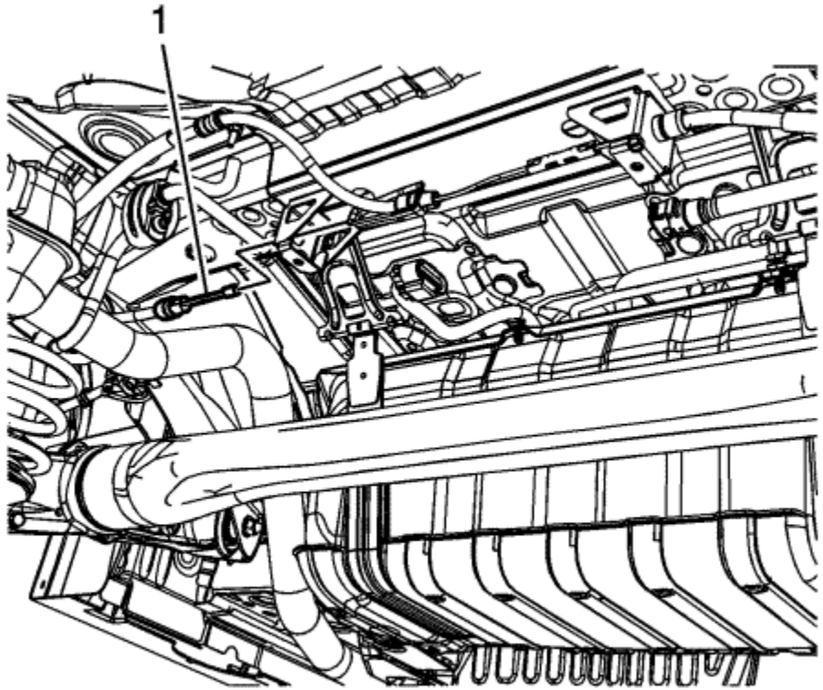

11. Remove the left rear hand brake cable (1) from the bracket on the vehicle underbody by compressing the locking tabs on the cable conduit.
12. Remove the left rear hand brake cable from the vehicle.

Installation Procedure

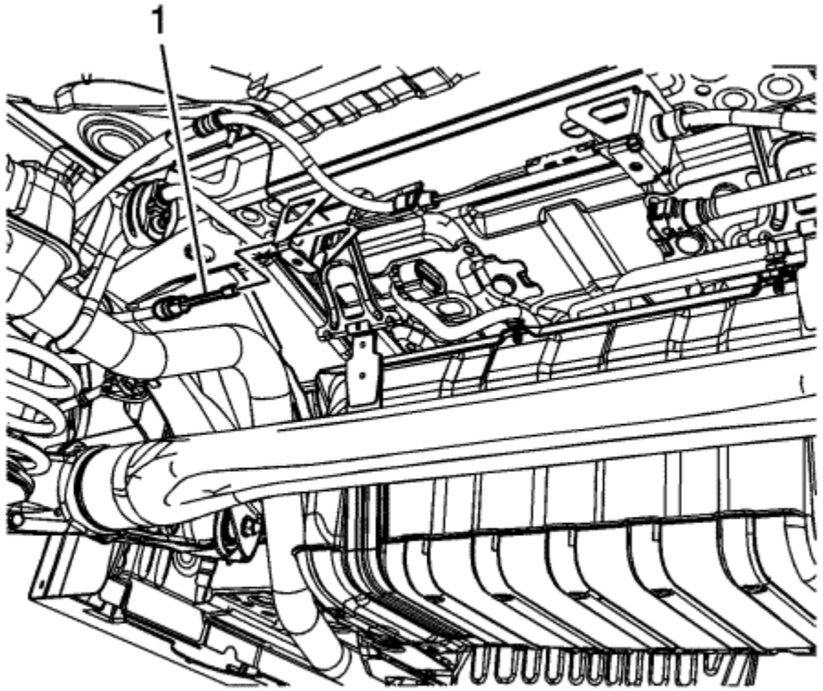

1. Install the left rear hand brake cable (1) to the bracket on the vehicle underbody.
2. Secure the locking tabs on the cable conduit to the hand brake cable bracket.

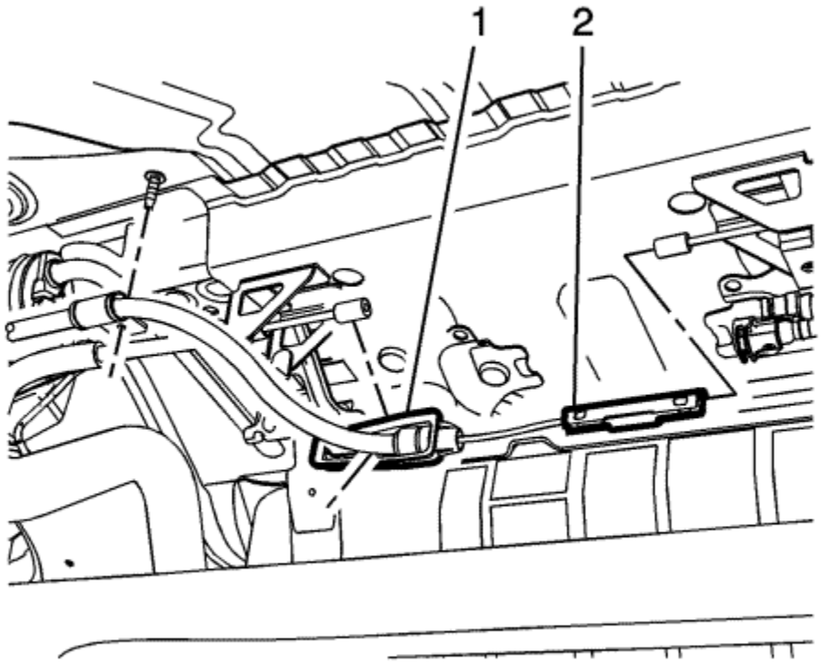

3. Connect the hand brake cable equaliser (1) to the left rear hand brake cable.
4. Install the evaporative emission canister and bracket assembly. Refer to Evaporative Emission Canister Vent Solenoid Valve Replacement .

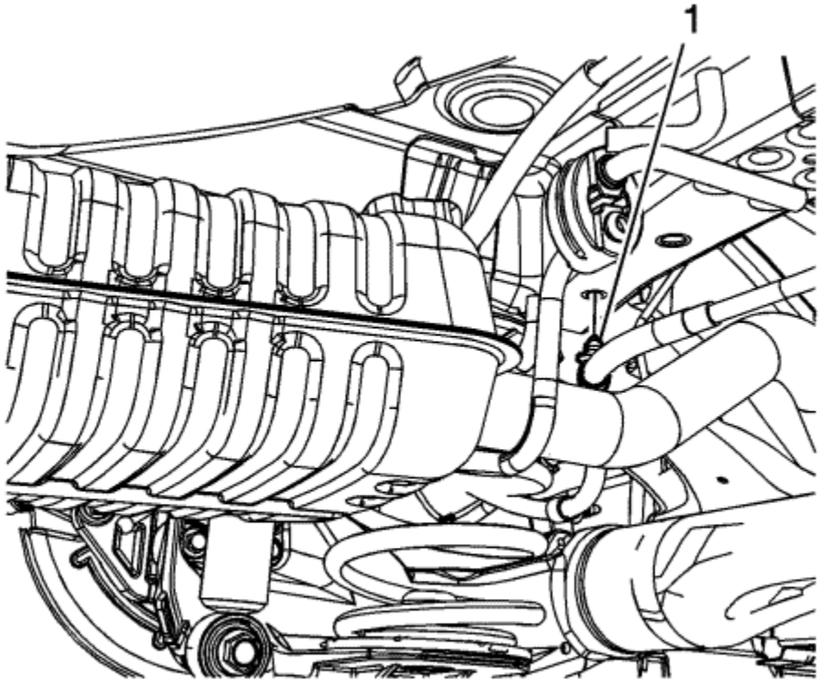

5. Install the hand brake cable retainer (1) to the vehicle underbody.

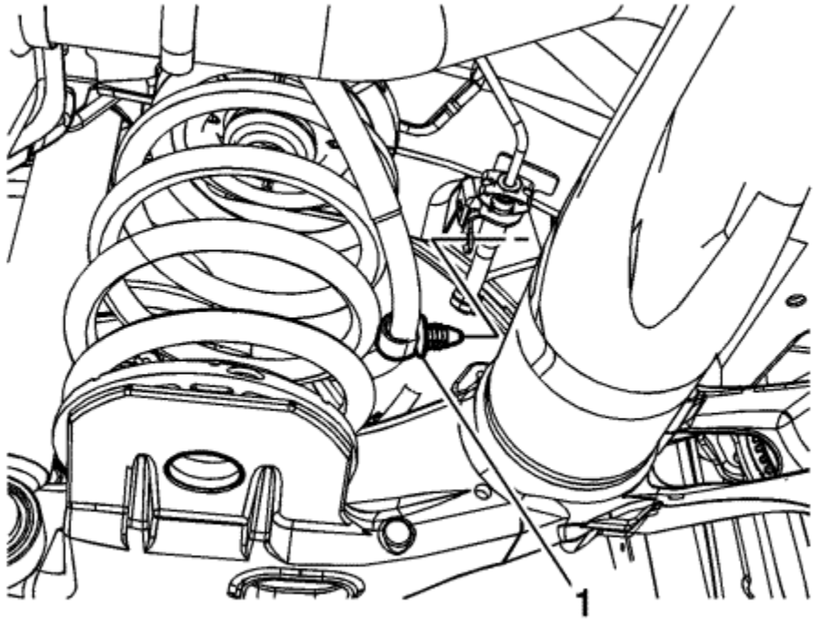

6. Install the hand brake cable retainer (1) to the hydraulic brake pipe bracket.

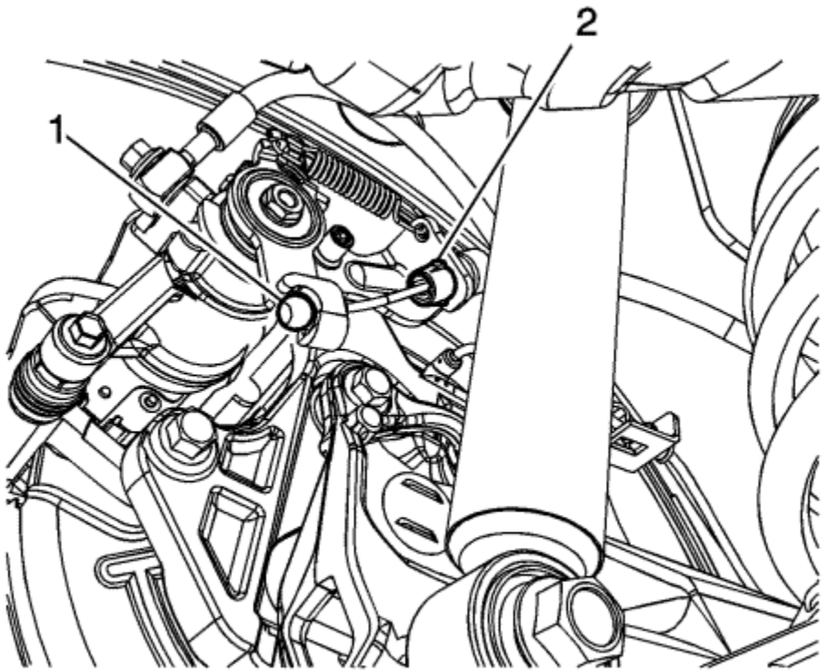

7. Connect the left rear hand brake cable to the actuator lever (1) on the brake calliper.
8. Secure the locking tabs on the left rear hand brake cable conduit (2) to the bracket.
9. Enable the hand brake cable adjuster. Refer to Hand brake Cable Adjuster Enabling .

© Copyright Chevrolet. All rights reserved

Hand brake Rear Cable Replacement - Right Side

Removal Procedure

1. Place the transmission in PARK.
2. Disable the hand brake cable adjuster. Refer to Hand brake Cable Adjuster Disabling .
3. Place the power button in the OFF position.

   Danger: Do not use a service jack in locations other than those specified to lift this vehicle. Lifting the vehicle with a jack in those other locations could cause the vehicle to slip off the jack and roll; this could cause injury or death.

4. Raise and support the vehicle. Refer to Lifting and Jacking the Vehicle .

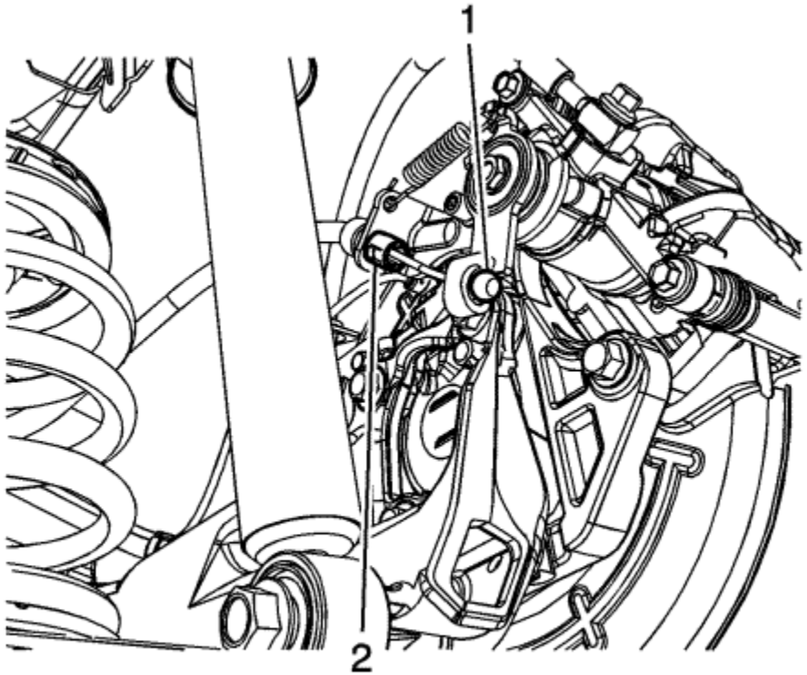

5. Disconnect the right rear hand brake cable from the actuator lever (1) on the brake calliper.
6. Compress the locking tabs on the right rear hand brake cable conduit (2) and remove the hand brake cable from the bracket.

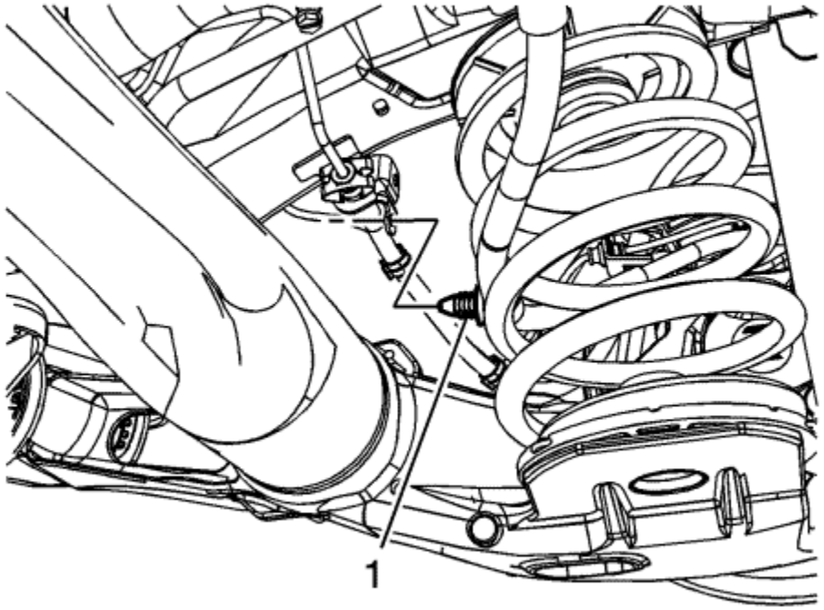

7. Release the right rear hand brake cable retainer (1) from the hydraulic brake pipe bracket.

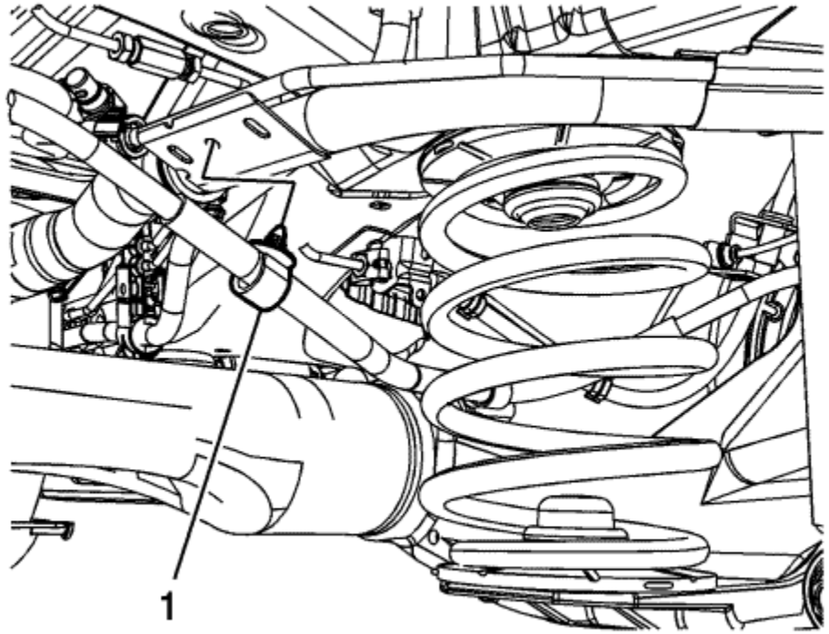

8. Release the right rear hand brake cable retainer (1) from the vehicle underbody.
9. Remove and position aside the evaporative emission canister and bracket assembly. Refer to Evaporative Emission Canister Vent Solenoid Valve Replacement .

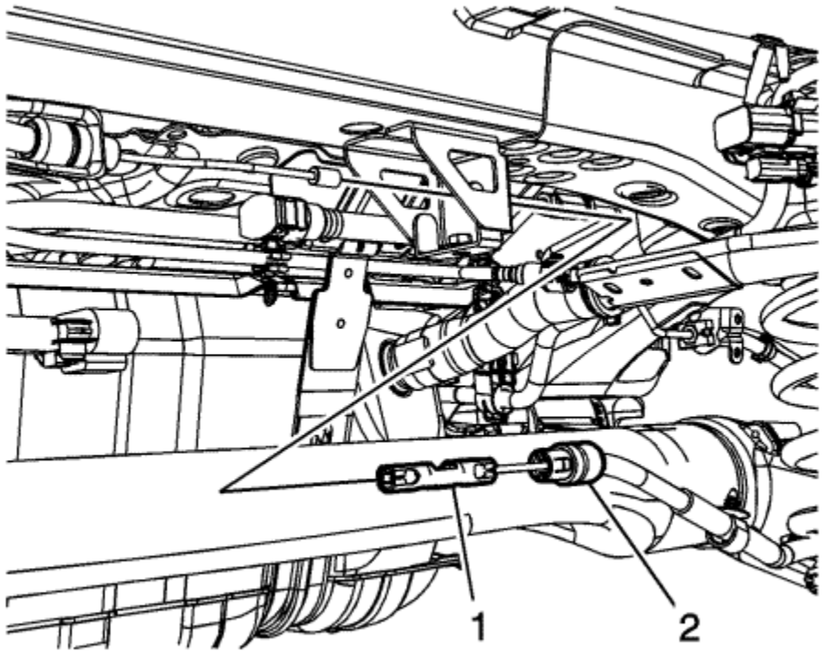

10. Disconnect the hand brake cable connector (1) from the rear hand brake cable.
11. Remove the right rear hand brake cable (2) from the bracket on the vehicle underbody by compressing the locking tabs on the cable conduit.
12. Remove the right rear hand brake cable from the vehicle.

Installation Procedure

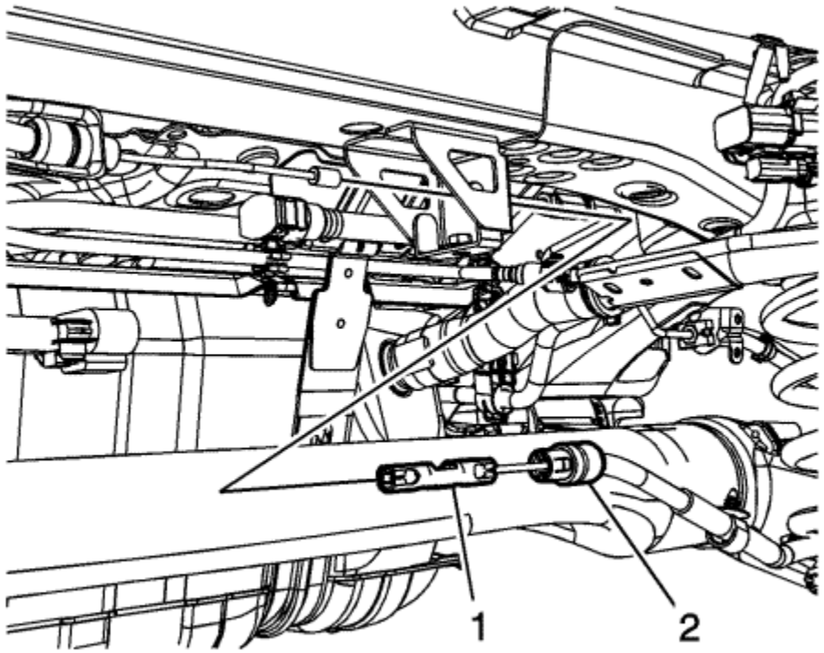

1. Install the right rear hand brake cable to the bracket on the vehicle underbody.
2. Connect the hand brake cable connector (1) to the rear hand brake cable.
3. Secure the locking tabs on the cable conduit (2) to the hand brake cable bracket.
4. Install the evaporative emission canister and bracket assembly. Refer to Evaporative Emission Canister Vent Solenoid Valve Replacement .

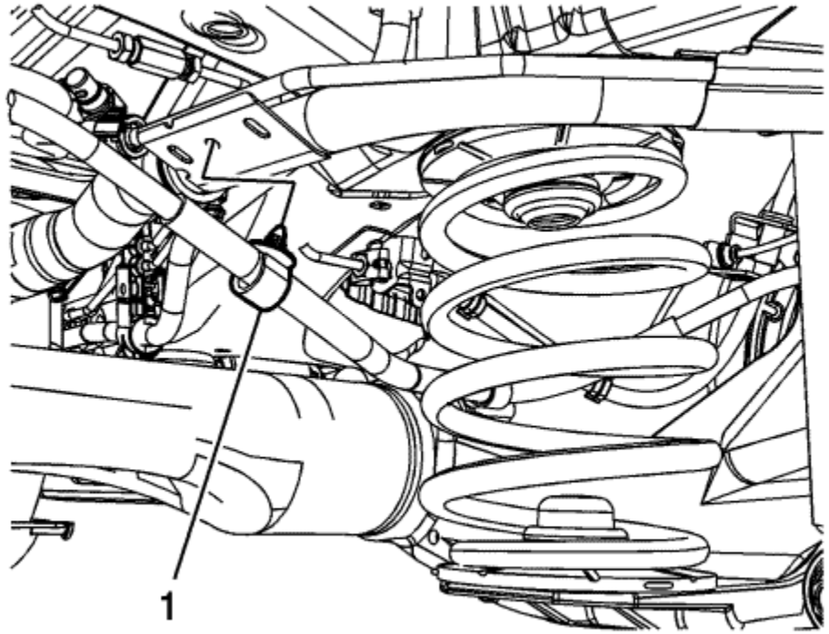

5. Install the right rear hand brake cable retainer (1) to the vehicle underbody.

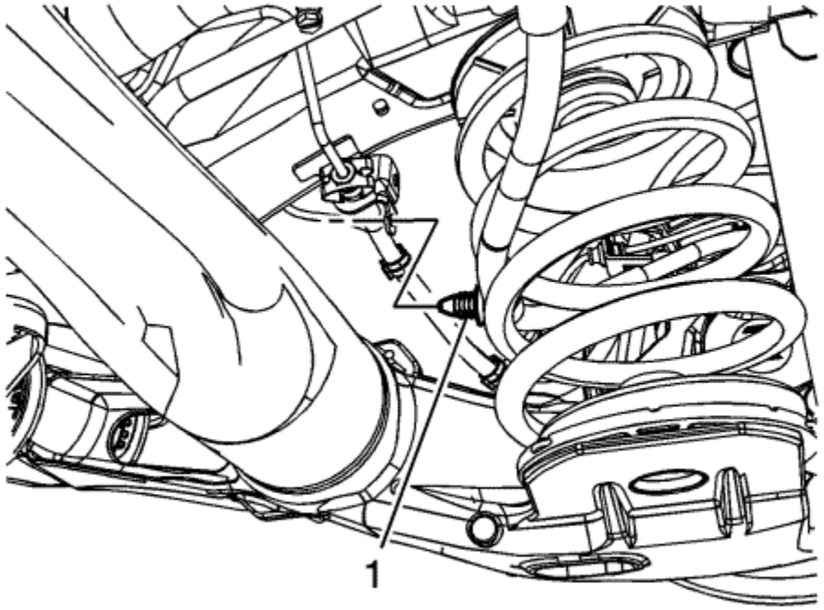

6. Install the right rear hand brake cable retainer (1) to the hydraulic brake pipe bracket.

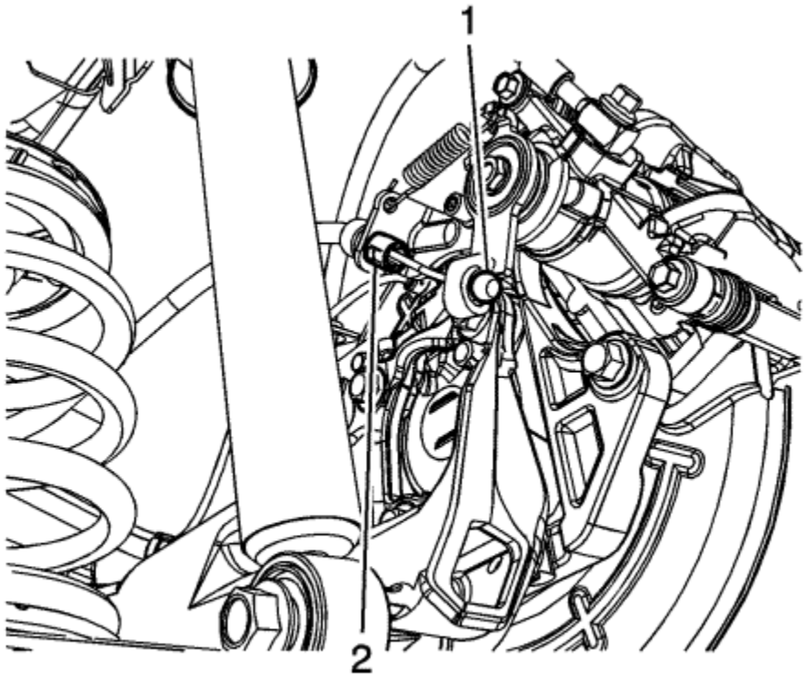

7. Install the right rear hand brake cable to the hand brake cable bracket on rear brake calliper.
8. Connect the right rear hand brake cable to the actuator lever (1) on the brake calliper.
9. Secure the locking tabs on the right rear hand brake cable conduit (2) to the bracket.
10. Enable the hand brake cable adjuster. Refer to Hand brake Cable Adjuster Enabling .

© Copyright Chevrolet. All rights reserved

Hand brake Cable Adjuster Disabling

The hand brake cable tension is controlled by the electronic hand brake (EHB) module. Tension can be fully released from the hand brake cables to allow for service of the hand brake system. Perform one of the following three methods to fully release cable tension.

Electronic Hand brake Cable Tension Release

With Scan Tool - Preferred Method

1. Block the drive wheels.
2. Install a scan tool to the vehicle.
3. Turn the ignition switch to the ON/RUN position with the engine OFF.
4. Using the scan tool, perform the following:
   4.1. From the scan tool menu, select Diagnostics
   4.2. Enter the appropriate vehicle information
   4.3. Select Chassis
   4.4. Select Hand brake Control Module
   4.5. Select Special Functions
   4.6. Select Cable Replacement
5. Follow the instructions on the scan tool to fully release the tension on the hand brake cables.

Without Scan Tool - Optional Method

1. Block the drive wheels.
2. Turn the ignition switch to the ON/RUN position with the engine OFF.
3. Place the automatic transmission in PARK or manual gearbox in NEUTRAL, as equipped.
4. Apply and hold the brake pedal. The brake pedal must remain applied throughout the hand brake cable tension release process.
5. Press and hold down the electronic hand brake (EHB) switch approximately 5 seconds.
6. Observe the HAND BRAKE lamp on the instrument cluster.
7. When the HAND BRAKE lamp flashes, release then immediately press and release the EHB switch.

   The hand brake cable tension is fully released.

8. Release the brake pedal.

Manual Hand brake Cable Tension Release

In the event the above methods to release the hand brake cable tension are unsuccessful, the following procedure may be necessary to release the hand brake cable tension.

> **Danger:** Do not use a service jack in locations other than those specified to lift this vehicle. Lifting the vehicle with a jack in those other locations could cause the vehicle to slip off the jack and roll; this could cause injury or death.

1. Raise and support the vehicle. Refer to Lifting and Jacking the Vehicle .
2. Remove the tyre and wheel assembly. Refer to Tyre and Wheel Removal and Installation .
3. Remove the left rear wheelhouse panel liner. Refer to Rear Wheelhouse Panel Liner Replacement .

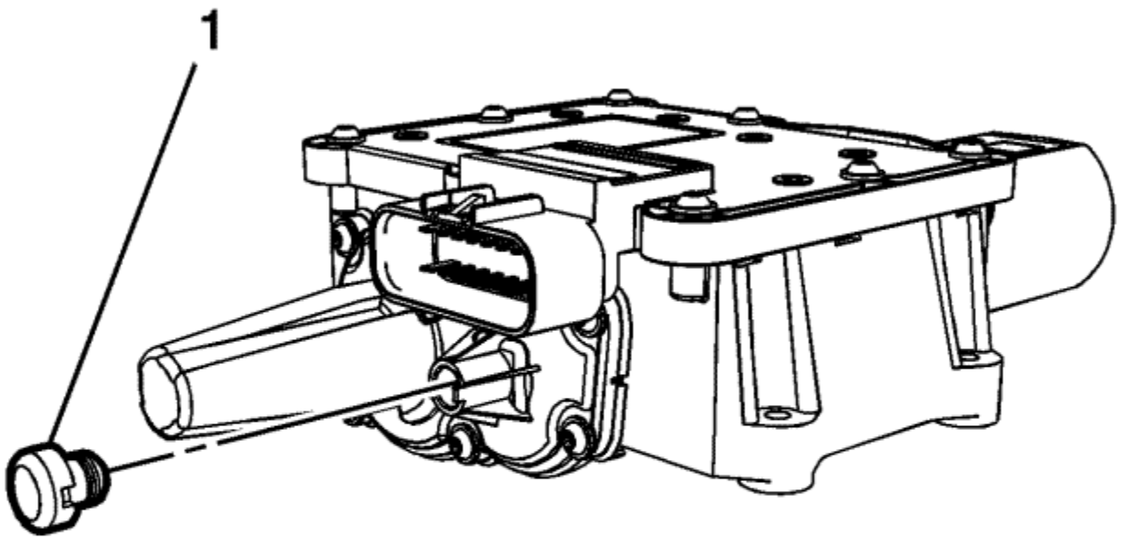

Note: The protective plug for the manual release is located near the electrical connector.

4. Remove the protective plug (1) from the EHB manual release.
5. Using an appropriate square-drive tool, rotate the mechanism clockwise until the tension is fully released from the hand brake cables.

   Up to 50 cycles may be required until the hand brake cable tension is fully released.

6. Install the protective plug to the EHB module.

© Copyright Chevrolet. All rights reserved

Hand brake Cable Adjuster Enabling

The hand brake cable tension is controlled by the electronic hand brake (EHB) module. Cable tension needs to be set and the EHB module needs to be calibrated following the cable tension disabling procedure. Perform one of the following two methods to fully restore cable tension.

Electronic Hand brake Cable Tensioning

With Scan Tool - Preferred Method

1. Block the drive wheels.
2. Install a scan tool to the vehicle.
3. Turn the ignition switch to the ON/RUN position with the engine OFF.
4. Using the scan tool, perform the following:
   4.1. From the scan tool menu, select Diagnostics
   4.2. Enter the appropriate vehicle information
   4.3. Select Chassis
   4.4. Select Hand brake Control Module
   4.5. Select Module Setup
   4.6. Select Hand brake Calibration
5. The EHB module will be calibrated and proper tension will be applied to the hand brake cables.

Without Scan Tool - Optional Method

1. Block the drive wheels.
2. Turn the ignition switch to the ON/RUN position with the engine OFF.
3. Apply the brake pedal.
4. Place the automatic transmission in PARK or manual gearbox in NEUTRAL, as equipped.
5. Momentarily lift then release the EHB switch to apply the EHB.
6. Momentarily press down then release the EHB switch to release the EHB.
7. Repeat step 5 and 6 to cycle the EHB on then off an additional 4 times.
8. The EHB module will be calibrated and proper tension will be applied to the hand brake cables.

© Copyright Chevrolet. All rights reserved

Electronic Hand brake Control Module Description

Vehicles with the electric hand brake have a switch in the centre console, which takes the place of the manual hand brake system, the foot pedal and release handle. In case of insufficient electrical power, the electric hand brake cannot be applied or released.

Hand brake Control Module

The hand brake control module has an internal motor, apply actuator, release actuator, and temperature sensor. The hand brake control module also contains the logic for applying and releasing the hand brake when commanded by the hand brake control switch. When the hand brake control module receives a signal from the switch the internal circuit board temperature is checked to verify it is within operating range before the control module performs the requested operation.

Electric Hand brake Apply

The electric hand brake can be applied any time the vehicle is stopped or in motion. The electric hand brake is applied by momentarily lifting up on the hand brake control switch. The red hand brake light will momentarily flash while the hand brake is being applied. Once fully applied, the red hand brake light will turn on. If the electric hand brake is applied while the vehicle is in motion, a chime will sound, and the message "Release Hand brake Switch" will be displayed.

If the red hand brake light is flashing, the electric hand brake is only partially applied or released, or there is a problem with the electric hand brake. The message "Service Hand brake" will be displayed.

Electric Hand brake Release

To release the electric hand brake, with power mode is Vehicle ON, or Engine Running, apply and hold the brake pedal, and push down momentarily on the hand brake control switch. When the electric hand brake is released the red hand brake light turns off.

The electric hand brake can be used to prevent roll back for vehicles with a manual gearbox taking off on a hill. In a situation where no roll back is desired, an applied electric hand brake will allow both feet to be used for the clutch and accelerator pedals in preparation for starting the vehicle moving in the intended direction. In this situation, perform the normal clutch and accelerator actions required to begin moving the vehicle. There is no need to push the switch to release the electric hand brake. To disable this feature lift and hold the hand brake control switch while the vehicle is in motion, this will keep the electric hand brake applied.

© Copyright Chevrolet. All rights reserved

Hand brake System Description and Operation

System Component Description

The hand brake system consists of the following:

Electronic Hand Brake (EHB) Control Module Assembly: Transfers hand brake system apply input force to the hand brake cable system.

Electronic Hand Brake Switch: Applied by the driver and activates EHB control module or Electronic Stability Control (ESC) braking system.

Hand brake Cable: Transfers input force received from the electronic hand brake control module, through the hand brake cable equaliser, to the hand brake apply lever.

Hand brake Cable Equalizer: Evenly distributes input force to both the left and right hand brake assemblies.

Hand Brake Apply Lever: Multiplies and transfers input force from the hand brake cable to mechanically apply the rear disc brake callipers

Disc Brake Calliper:: Transfers input force from the hand brake apply levers to the rear disc brake pads

Disc Brake Pads:: Applies mechanical output force from the disc brake callipers to the friction portion of the rear disc brake discs

System Operation

Hand brake apply input force is received by activating the electronic hand brake switch signalling the EHB control module, and transfers an evenly distributed force through the hand brake cables and equaliser to the hand brake apply levers. The hand brake apply levers multiply and transfer the input force to mechanically apply the rear disc brake callipers to prevent the rotation of the rear tyre and wheel assemblies. The electronic hand brake switch signals the EHB module to release applied input force the hand brake cables when activated. The EHB module then removes the applied input force, releasing the hand brake.

© Copyright Chevrolet. All rights reserved

Accessory DC Power Control Module Programming and Setup

Special Tools

EL-49642 SPS Programming Support Tool

For equivalent regional tools, refer to Special Tools .

Note:

- DO NOT program a control module unless directed to by a service procedure or a service bulletin. If the ECU is not properly configured with the correct calibration software, the ECU will not control all of the vehicle features properly.
- Ensure the programming tool is equipped with the latest software and is securely connected to the data link connector. If there is an interruption during programming, programming failure or ECU damage may occur.
- Stable battery voltage is critical during programming. Any fluctuation, spiking, over voltage or loss of voltage will interrupt programming. Install the *EL-49642* SPS Programming Support Tool to maintain system voltage. If not available, connect a fully charged 12 V jumper or booster pack disconnected from the AC voltage supply. DO NOT connect a battery charger.
- Turn OFF or disable systems that may put a load on the vehicles battery such as; interior lights, exterior lights (including daytime running lights), HVAC, radio, etc.
- During the programming procedure, follow the SPS prompts for the correct ignition switch position.
- Clear DTCs after programming is complete. Clearing powertrain DTCs will set the Inspection/Maintenance (I/M) system status indicators to NO.

Replace and Program ECU or Reprogram ECU

To program a replacement or an existing ECU, perform the following procedure:

1. Install *EL-49642* SPS Programming Support Tool .
2. Access the Service Programming System (SPS) and follow the on-screen instructions.
3. On the SPS Supported Controllers screen, select 14 Volt Power Module - Programming and follow the on-screen instructions.
4. At the end of programming, choose the "Clear All DTCs" function on the SPS screen.

Unsuccessful Programming Recovery

In the event of an interrupted or unsuccessful programming event, perform the following steps:

1. DO NOT turn the vehicle OFF. Ensure that all ECU, DLC and programming tool connections are secure and the TIS terminal operating software is up to date.

2. Attempt to reprogram the ECU.
3. If the ECU can still not be programmed, turn the vehicle OFF for at least 1 minute.
4. Turn the vehicle ON and attempt to reprogram the ECU. The ECU should program.
   If the ECU still cannot be programmed, replace the ECU.

&#169© Copyright Chevrolet. All rights reserved

Air Conditioning Compressor Control Module Programming and Setup

Note:

- DO NOT program a control module unless directed to by a service procedure or a service bulletin. If the ECU is not properly configured with the correct calibration software, the ECU will not control all of the vehicle features properly.
- Ensure the programming tool is equipped with the latest software and is securely connected to the data link connector. If there is an interruption during programming, programming failure or ECU damage may occur.
- Stable battery voltage is critical during programming. Any fluctuation, spiking, over voltage or loss of voltage will interrupt programming. Install the *EL-49642* SPS Programming Support Tool to maintain system voltage. If not available, connect a fully charged 12 V jumper or booster pack disconnected from the AC voltage supply. DO NOT connect a battery charger.
- Turn OFF or disable systems that may put a load on the vehicles battery such as; interior lights, exterior lights (including daytime running lights), HVAC, radio, etc.
- During the programming procedure, follow the SPS prompts for the correct power mode.
- Clear DTCs after programming is complete. Clearing powertrain DTCs will set the Inspection/Maintenance (I/M) system status indicators to NO.

Replace and Program ACCM or Reprogram ACCM

To program a replacement or an existing Air Conditioning Control Module (ACCM), perform the following procedure:

1. Install EL-49642 SPS Programming Support Tool.
2. Access the Service Programming System (SPS) and follow the on-screen instructions.
3. On the SPS Supported Controllers screen, select Air Conditioning Control Module (ACCM) Programming and follow the on-screen instructions.

Unsuccessful Programming Recovery

In the event of an interrupted or unsuccessful programming event, perform the following steps:

1. DO NOT turn the vehicle OFF. Ensure that all ECU, DLC and programming tool connections are secure and the TIS terminal operating software is up to date.
2. Attempt to reprogram the ECU.
3. If the ECU can still not be programmed, turn the vehicle OFF for at least one minute.
4. Vehicle in Service Mode, attempt to reprogram the ECU. The ECU should program.
   If the ECU still cannot be programmed, replace the ECU.

&#169© Copyright Chevrolet. All rights reserved

Audio Amplifier Programming and Setup

Replace and Program ECU or Reprogram ECU

This ECU does not require SPS programming or any set-up procedures.

© Copyright Chevrolet. All rights reserved

Battery Charger Programming and Setup

Special Tools

EL-49642 SPS Programming Support Tool

For equivalent regional tools, refer to Special Tools .

Note:

- DO NOT program a control module unless directed to by a service procedure or a service bulletin. If the ECU is not properly configured with the correct calibration software, the ECU will not control all of the vehicle features properly.
- Ensure the programming tool is equipped with the latest software and is securely connected to the data link connector. If there is an interruption during programming, programming failure or ECU damage may occur.
- Stable battery voltage is critical during programming. Any fluctuation, spiking, over voltage or loss of voltage will interrupt programming. Install the *EL-49642* SPS Programming Support Tool to maintain system voltage. If not available, connect a fully charged 12 V jumper or booster pack disconnected from the AC voltage supply. DO NOT connect a battery charger.
- Turn OFF or disable systems that may put a load on the vehicles battery such as; interior lights, exterior lights (including daytime running lights), HVAC, radio, etc.
- During the programming procedure, follow the SPS prompts for the correct power mode.
- Clear DTCs after programming is complete. Clearing powertrain DTCs will set the Inspection/Maintenance (I/M) system status indicators to NO.

Replace and Program ECU or Reprogram ECU

To program a replacement or an existing ECU, perform the following procedure:

1. Install *EL-49642* SPS programming support tool .
2. Connect the drive motor battery charger cable.
3. Access the Service Programming System (SPS) and follow the on-screen instructions.
4. On the SPS Supported Controllers screen, select Battery Charger - Programming and follow the on-screen instructions.
5. On the SPS Supported Controllers screen, select Batter Charger - Setup and follow the on-screen instructions.
6. On the SPS Supported Controllers screen, select Battery Charger - Configuration and follow the on-screen instructions.
7. At the end of programming, choose the "Clear All DTCs" function on the SPS screen.

Unsuccessful Programming Recovery

In the event of an interrupted or unsuccessful programming event, perform the following steps:

1. DO NOT turn the vehicle OFF. Ensure that all ECU, DLC and programming tool connections are secure and the TIS terminal operating software is up to date.
2. Attempt to reprogram the ECU.
3. If the ECU can still not be programmed, turn the vehicle OFF for at least one minute.
4. Vehicle in Service Mode, attempt to reprogram the ECU. The ECU should program.
   If the ECU still cannot be programmed, replace the ECU.

&#169© Copyright Chevrolet. All rights reserved

Battery Energy Control Module Programming and Setup

Note:

- DO NOT program a control module unless directed to by a service procedure or a service bulletin. If the ECU is not properly configured with the correct calibration software, the ECU will not control all of the vehicle features properly.
- Ensure the programming tool is equipped with the latest software and is securely connected to the data link connector. If there is an interruption during programming, programming failure or ECU damage may occur.
- Stable battery voltage is critical during programming. Any fluctuation, spiking, over voltage or loss of voltage will interrupt programming. Install the *EL-49642* SPS Programming Support Tool to maintain system voltage. If not available, connect a fully charged 12 V jumper or booster pack disconnected from the AC voltage supply. DO NOT connect a battery charger.
- Turn OFF or disable systems that may put a load on the vehicles battery such as; interior lights, exterior lights (including daytime running lights), HVAC, radio, etc.
- During the programming procedure, follow the SPS prompts for the correct ignition switch position.
- Clear DTCs after programming is complete. Clearing powertrain DTCs will set the Inspection/Maintenance (I/M) system status indicators to NO.

Replace and Program ECU or Reprogram ECU

To program a replacement or an existing ECU, perform the following procedure:

1. Install *EL-49642* SPS programming support tool.
2. Access the Service Programming System (SPS) and follow the on-screen instructions.
3. On the SPS Supported Controllers screen, select Battery Energy Control Module - Programming and follow the on-screen instructions.
4. At the end of programming, choose the "Clear All DTCs" function on the SPS screen.

Unsuccessful Programming Recovery

In the event of an interrupted or unsuccessful programming event, perform the following steps:

1. DO NOT turn the Vehicle OFF. Ensure that all ECU, DLC and programming tool connections are secure and the TIS terminal operating software is up to date.
2. Attempt to reprogram the ECU.
3. If the ECU can still not be programmed, turn the Vehicle OFF for at least one minute.
4. Turn the Vehicle in Service Mode and attempt to reprogram the ECU. The ECU should program.
   If the ECU still cannot be programmed, replace the ECU.

&#169© Copyright Chevrolet. All rights reserved

Body Control Module Programming and Setup

Special Tools

- *EL-49642* SPS Programming Support Tool
- *EL-46079* Tyre Pressure Monitor Diagnostic Tool

For equivalent regional tools, refer to Special Tools .

Note:

- DO NOT program a control module unless directed to by a service procedure or a service bulletin. If the ECU is not properly configured with the correct calibration software, the ECU will not control all of the vehicle features properly.
- Ensure the programming tool is equipped with the latest software and is securely connected to the data link connector. If there is an interruption during programming, programming failure or ECU damage may occur.
- Stable battery voltage is critical during programming. Any fluctuation, spiking, over voltage or loss of voltage will interrupt programming. Install the *EL-49642* SPS Programming Support Tool to maintain system voltage. If not available, connect a fully charged 12 V jumper or booster pack disconnected from the AC voltage supply. DO NOT connect a battery charger.
- Turn OFF or disable systems that may put a load on the vehicles battery such as; interior lights, exterior lights (including daytime running lights), HVAC, radio, etc.
- During the programming procedure, follow the SPS prompts for the correct power mode.
- Clear DTCs after programming is complete. Clearing powertrain DTCs will set the Inspection/Maintenance (I/M) system status indicators to NO.

Replace and Program ECU

To program a replacement body control module (BCM), perform the following procedure:

1. Install *EL-49642* SPS programming support tool .
2. Access the Service Programming System (SPS) and follow the on-screen instructions.
3. On the SPS Supported Controllers screen, select BCM Body Control Module - Programming and follow the on-screen instructions.
4. Place the key in the programming slot. Refer to the Help selection button on the SPS Immobiliser Setup screen for the exact slot location. All additional keys must be at least 3 metres away from the vehicle. When replacing a BCM and adding a new key, always program the existing key first before programming the new key.

   Note: The following programming step may take between 10-12 min. and progress will appear to have stopped during this process. This is a normal security timer response and a restart should not be performed. If the DTC B389A set immediately after programming a replacement BCM, the Immobiliser Learn procedure was not properly completed. The Immobiliser Learn procedure needs to be performed again.

5. On the SPS Supported Controllers screen, select IMMO Immobiliser Learn - Setup. On the next screen, select Body Control Module IMMO Learn with Existing Transponder or Remote Key and follow the on-screen instructions. When Immobiliser Learn is complete, press the Unlock button on the keyless entry transmitter to allow the keyless entry transmitter to exit the Immobiliser Learn mode.

   Note: When performing the Tyre Pressure Monitor Sensor Learn during BCM setup, the *EL-46079* tyre pressure monitor diagnostic tool must be used to activate each tyre pressure sensor.

6. On the SPS Supported Controllers screen, select BCM Body Control Module - Setup and follow the on-screen instructions.
7. Check the driver information centre display for additional messages regarding further calibration instructions. If there are no additional driver information centre instructions present, programming is complete.
8. At the end of programming, choose the "Clear All DTCs" function on the SPS screen.

Reprogram ECU

To program an existing BCM, perform the following procedure:

1. Install *EL-49642* SPS programming support tool .
2. Access the Service Programming System (SPS) and follow the on-screen instructions.
3. On the SPS Supported Controllers screen, select BCM Body Control Module - Programming and follow the on-screen instructions.

   Note: When performing the Tyre Pressure Monitor Sensor Learn during BCM setup, the *EL-46079* tyre pressure monitor diagnostic tool must be used to activate each tyre pressure sensor.

4. On the SPS Supported Controllers screen, select BCM Body Control Module - Setup and follow the on-screen instructions.
5. Check the driver information centre display for additional messages regarding further calibration instructions. If there are no additional driver information centre instructions present, programming is complete.
6. At the end of programming, choose the "Clear All DTCs" function on the SPS screen.

Unsuccessful Programming Recovery

In the event of an interrupted or unsuccessful programming event, perform the following steps:

1. DO NOT turn the vehicle OFF. Ensure that all ECU, DLC and programming tool connections are secure and the TIS terminal operating software is up to date.
2. Attempt to reprogram the ECU.
3. If the ECU can still not be programmed, turn the vehicle OFF for at least one minute.
4. Vehicle in Service Mode, attempt to reprogram the ECU. The ECU should program.
   If the ECU still cannot be programmed, replace the ECU.

&#169© Copyright Chevrolet. All rights reserved

Control Solenoid Valve and Transmission Control Module Assembly Programming and Setup - 4ET50

Note:

- DO NOT program a control module unless directed to by a service procedure or a service bulletin. If the ECU is not properly configured with the correct calibration software, the ECU will not control all of the vehicle features properly.
- Ensure the programming tool is equipped with the latest software and is securely connected to the data link connector. If there is an interruption during programming, programming failure or ECU damage may occur.
- Stable battery voltage is critical during programming. Any fluctuation, spiking, over voltage or loss of voltage will interrupt programming. Install the *EL-49642* SPS Programming Support Tool to maintain system voltage. If not available, connect a fully charged 12 V jumper or booster pack disconnected from the AC voltage supply. DO NOT connect a battery charger.
- Turn OFF or disable systems that may put a load on the vehicles battery such as; interior lights, exterior lights (including daytime running lights), HVAC, radio, etc.
- During the programming procedure, follow the SPS prompts for the correct ignition switch position.
- Clear DTCs after programming is complete. Clearing powertrain DTCs will set the Inspection/Maintenance (I/M) system status indicators to NO.

Replace and Program ECU or Reprogram ECU

To program a replacement or an existing ECU, perform the following procedure:

1. Install *EL-49642* SPS Programming Support Tool. .
2. Access the Service Programming System (SPS) and follow the on-screen instructions.
3. On the SPS Supported Controllers screen, select TCM - Programming and follow the on-screen instructions.
4. At the end of programming, choose the "Clear All DTCs" function on the SPS screen.

Unsuccessful Programming Recovery

In the event of an interrupted or unsuccessful programming event, perform the following steps:

1. DO NOT turn the vehicle OFF. Ensure that all ECU, DLC and programming tool connections are secure and the TIS terminal operating software is up to date.
2. Attempt to reprogram the ECU.
3. If the ECU can still not be programmed, turn the vehicle OFF for at least one minute.
4. Turn the vehicle ON and attempt to reprogram the ECU. The ECU should program.
   If the ECU still cannot be programmed, replace the ECU.

© Copyright Chevrolet. All rights reserved

Coolant Heater Control Module Programming and Setup

Note:

- DO NOT program a control module unless directed to by a service procedure or a service bulletin. If the ECU is not properly configured with the correct calibration software, the ECU will not control all of the vehicle features properly.
- Ensure the programming tool is equipped with the latest software and is securely connected to the data link connector. If there is an interruption during programming, programming failure or ECU damage may occur.
- Stable battery voltage is critical during programming. Any fluctuation, spiking, over voltage or loss of voltage will interrupt programming. Install the *EL-49642* SPS Programming Support Tool to maintain system voltage. If not available, connect a fully charged 12 V jumper or booster pack disconnected from the AC voltage supply. DO NOT connect a battery charger.
- Turn OFF or disable systems that may put a load on the vehicles battery such as; interior lights, exterior lights (including daytime running lights), HVAC, radio, etc.
- During the programming procedure, follow the SPS prompts for the correct ignition switch position.
- Clear DTCs after programming is complete. Clearing powertrain DTCs will set the Inspection/Maintenance (I/M) system status indicators to NO.

Replace and Program ECU or Reprogram ECU

To program a replacement or an existing ECU, perform the following procedure:

1. Install *EL-49642* SPS programming support tool .
2. Access the Service Programming System (SPS) and follow the on-screen instructions.
3. On the SPS Supported Controllers screen, select Coolant Heater Control Module - Programming and follow the on-screen instructions.
4. At the end of programming, choose the "Clear All DTCs" function on the SPS screen.

Unsuccessful Programming Recovery

In the event of an interrupted or unsuccessful programming event, perform the following steps:

1. DO NOT turn the Vehicle OFF. Ensure that all ECU, DLC and programming tool connections are secure and the TIS terminal operating software is up to date.
2. Attempt to reprogram the ECU.
3. If the ECU can still not be programmed, turn the Vehicle OFF for at least one minute.
4. Turn the Vehicle in Service Mode and attempt to reprogram the ECU. The ECU should program.
   If the ECU still cannot be programmed, replace the ECU.

&#169© Copyright Chevrolet. All rights reserved

Drive Motor Generator Power Inverter Module Programming and Setup

Special Tools

EL-49642 SPS Programming Support Tool

For equivalent regional tools, refer to Special Tools .

Note:

- DO NOT program a control module unless directed to by a service procedure or a service bulletin. If the ECU is not properly configured with the correct calibration software, the ECU will not control all of the vehicle features properly.
- Ensure the programming tool is equipped with the latest software and is securely connected to the data link connector. If there is an interruption during programming, programming failure or ECU damage may occur.
- Stable battery voltage is critical during programming. Any fluctuation, spiking, over voltage or loss of voltage will interrupt programming. Install the *EL-49642* SPS Programming Support Tool to maintain system voltage. If not available, connect a fully charged 12 V jumper or booster pack disconnected from the AC voltage supply. DO NOT connect a battery charger.
- Turn OFF or disable systems that may put a load on the vehicles battery such as; interior lights, exterior lights (including daytime running lights), HVAC, radio, etc.
- During the programming procedure, follow the SPS prompts for the correct ignition switch position.
- Clear DTCs after programming is complete. Clearing powertrain DTCs will set the Inspection/Maintenance (I/M) system status indicators to NO.

Replace and Program ECU or Reprogram ECU

To program a replacement or an existing ECU, perform the following procedure:

1. Install *EL-49642* SPS Programming Support Tool .
2. Access the Service Programming System (SPS) and follow the on-screen instructions.
3. On the SPS Supported Controllers screen, select Power Inverter Module - Programming and follow the on-screen instructions.
4. On the SPS Supported Controllers screen, select Immobiliser Learn - Setup and follow the on-screen instructions.
5. At the end of programming, choose the "Clear All DTCs" function on the SPS screen.

Unsuccessful Programming Recovery

In the event of an interrupted or unsuccessful programming event, perform the following steps:

1. DO NOT turn the vehicle OFF. Ensure that all ECU, DLC and programming tool connections are secure and the TIS terminal operating software is up to date.
2. Attempt to reprogram the ECU.
3. If the ECU can still not be programmed, turn the vehicle OFF for at least 1 minute.
4. Turn the vehicle ON and attempt to reprogram the ECU. The ECU should program.
   If the ECU still cannot be programmed, replace the ECU.

&#169© Copyright Chevrolet. All rights reserved

Electronic Brake Control Module Programming and Setup

Note:

- DO NOT program a control module unless directed to by a service procedure or a service bulletin. If the control module is not properly configured with the correct calibration software, the control module will not control all of the vehicle features properly.
- Ensure the programming tool is equipped with the latest software and is securely connected to the data link connector. If there is an interruption during programming, programming failure or control module damage may occur.
- Stable battery voltage is critical during programming. Any fluctuation, spiking, over voltage or loss of voltage will interrupt programming. Install the EL-49642 SPS Programming Support Tool to maintain system voltage. If not available, connect a fully charged 12 V jumper or booster pack disconnected from the AC voltage supply. DO NOT connect a battery charger.
- Turn OFF or disable systems that may put a load on the vehicles battery such as; interior lights, exterior lights (including daytime running lights), HVAC, radio, etc.
- During the programming procedure, follow the SPS prompts for the correct ignition switch position.
- Clear DTCs after programming is complete. Clearing powertrain DTCs will set the Inspection and Maintenance system status indicators to NO.

Special Tools

EL-49642 SPS Programming Support Tool.

For equivalent regional tools, refer to Special Tools

Replace and Program EBCM or Reprogram EBCM

To program a replacement or an existing Electronic Brake Control Module (EBCM), perform the following procedure:

1. Install EL-49642 SPS Programming Support Tool.
2. Access the Service Programming System (SPS) and follow the on-screen instructions.
3. On the SPS Supported Controllers screen, select Electronic Brake Control Module - Programming and follow the on-screen instructions.
4. On the SPS Supported Controllers screen, select Electronic Brake Control Module - Setup and follow the on-screen instructions.
5. At the end of programming, choose the "Clear All DTCs" function on the SPS screen.
6. If the electronic brake control module was replaced and the hydraulic brake lines were disconnected, perform the Antilock Brake System Automated Bleed prior to following the last three steps.
7. With a scan tool, access the EBCM, Configuration/Reset Functions, Electronic Brake Control Module Learn.
8. With a scan tool, access the EBCM, Configuration/Reset Functions, Brakes Control Offset Learn.
9. With a scan tool, access the Multi-Axis Acceleration Sensor Module, Configuration/Reset Functions, Yaw Rate Sensor Learn.

Unsuccessful Programming Recovery

In the event of an interrupted or unsuccessful programming event, perform the following steps:

1. DO NOT turn the Vehicle OFF. Ensure that all control module, DLC and programming tool connections are secure and the TIS terminal operating software is up to date.
2. Attempt to reprogram the control module.
3. If the control module can still not be programmed, turn the Vehicle OFF for at least one minute.
4. Turn the Vehicle in Service Mode and attempt to reprogram the control module. The control module should program.
   If the control module still cannot be programmed, replace the control module.

&#169© Copyright Chevrolet. All rights reserved

Electronic Parking Brake Control Module Programming and Setup

Note:

- DO NOT program a control module unless directed to by a service procedure or a service bulletin. If the ECU is not properly configured with the correct calibration software, the ECU will not control all of the vehicle features properly.
- Ensure the programming tool is equipped with the latest software and is securely connected to the data link connector. If there is an interruption during programming, programming failure or ECU damage may occur.
- Stable battery voltage is critical during programming. Any fluctuation, spiking, over voltage or loss of voltage will interrupt programming. Install the *EL-49642* SPS Programming Support Tool to maintain system voltage. If not available, connect a fully charged 12 V jumper or booster pack disconnected from the AC voltage supply. DO NOT connect a battery charger.
- Turn OFF or disable systems that may put a load on the vehicles battery such as; interior lights, exterior lights (including daytime running lights), HVAC, radio, etc.
- During the programming procedure, follow the SPS prompts for the correct ignition switch position.
- Clear DTCs after programming is complete. Clearing powertrain DTCs will set the Inspection/Maintenance (I/M) system status indicators to NO.

Replace and Program ECU or Reprogram ECU

To program a replacement or an existing ECU, perform the following procedure:

1. Install EL-49642
2. Access the Service Programming System (SPS) and follow the on-screen instructions.
3. On the SPS Supported Controllers screen, select Park Brake Control Module - Programming and follow the on-screen instructions.
4. On the SPS Supported Controllers screen, select Park Brake Control Module - Setup and follow the on-screen instructions.
5. At the end of programming, choose the "Clear All DTCs" function on the SPS screen.
6. With a scan tool, perform the Parking Brake Cable Adjuster Enabling procedure. Refer to Parking Brake Cable Adjuster Enabling

&#169© Copyright Chevrolet. All rights reserved

Engine Control Module Programming and Setup

Special Tools

EL-49642 SPS Programming Support Tool

For equivalent regional tools, refer to Special Tools

The following service procedures require either a programming or a setup event performed for a complete repair.

Note:

- DO NOT program a control module unless directed to by a service procedure or a service bulletin. If the ECU is not properly configured with the correct calibration software, the ECU will not control all of the vehicle features properly.
- Ensure the programming tool is equipped with the latest software and is securely connected to the data link connector. If there is an interruption during programming, programming failure or ECU damage may occur.
- Stable battery voltage is critical during programming. Any fluctuation, spiking, over voltage or loss of voltage will interrupt programming. Install the *EL-49642* SPS Programming Support Tool to maintain system voltage. If not available, connect a fully charged 12 V jumper or booster pack disconnected from the AC voltage supply. DO NOT connect a battery charger.
- Turn OFF or disable systems that may put a load on the vehicles battery such as; interior lights, exterior lights (including daytime running lights), HVAC, radio, etc.
- During the programming procedure, follow the SPS prompts for the correct ignition switch position.
- Clear DTCs after programming is complete. Clearing powertrain DTCs will set the Inspection/Maintenance (I/M) system status indicators to NO.

ECM Replacement

If the engine control module (ECM) is replaced, the following procedures must be performed:

1. Connect a scan tool to the vehicle and access Service Programming System (SPS).
2. Before removing the old control module, perform the SPS function Prepare Control Module for Removal.

   Note: The Prepare Control Module for Removal function can only be performed when communication with the old control module is still possible.

3. Vehicle OFF, replace the ECM. Refer to Engine Control Module Replacement .
4. Perform the SPS function Engine Control Module - Programming and follow the onscreen instructions.
5. Perform the SPS function Engine Control Module - Configuration & Setup and follow the onscreen instructions. On the screen Control Module - Configuration and Setup

Function(s), select both control module Configuration/Reconfiguration and the appropriate control module Setup.

6. Clear DTCs after completing the programming procedure.
7. Vehicle ON, engine running.
8. If the SPS function Prepare Control Module for Removal could not be performed, perform the following:

   Engine Oil Life Remaining. When available, use a scan tool to reset the Engine Oil Life back to the original percentage recorded before the module was replaced.

ECM Reprogramming

If the ECM needs to be reprogrammed, the following procedures must be performed:

1. Connect a scan tool to the vehicle and access SPS.
2. Perform the SPS function Engine Control Module - Programming and follow the onscreen instructions.
3. Engine Oil Life Remaining. When available, use a scan tool to reset the Engine Oil Life back to the original percentage recorded before the module was reprogrammed.

Setup for Component Replacement

The replacement of some components will require a setup procedure for complete repair.

To speed up the learn process perform the scan tool Fuel Trim Reset function if any of the following components are replaced:

- Manifold absolute pressure sensor
- Accelerator pedal position sensor
- Throttle Body
- Heated oxygen sensor
- Fuel injector
- Crankshaft position sensor
- Camshaft position sensor

&#169© Copyright Chevrolet. All rights reserved

Fuel Pump Flow Control Module Programming and Setup

The fuel pump control module must be programmed with the proper calibration software. The module stores and utilises this information however if it is not properly configured with the correct calibration software, the fuel pump control module will not control all of the vehicle features properly.

Ensure that the following conditions exist in order to prepare for fuel pump control module programming:

1. The battery is fully charged.
2. The MDI data link connectors are secure.
3. The scan tool is loaded with the most current software version.
4. All disconnected modules and devices are reconnected securely.
5. This entire procedure has been reviewed before proceeding.

Do not reprogram the fuel pump control module unless directed by a service procedure or a service bulletin.

Fuel Pump Control Module Programming

To program and setup an existing or new replacement fuel pump control module, perform the following procedure:

1. Access the Service Programming System (SPS) and follow the on-screen instructions.
2. On the SPS Supported Controllers screen, select FPCM Fuel Pump Flow Control Module - Programming and follow the on-screen instructions.

If the fuel pump control module fails to accept the program, verify all scan tool and fuel pump control module connections are secure.

Note: After programming is completed, perform the following to avoid future misdiagnosis:

1. Turn the Vehicle OFF for 10 seconds.
2. Open and close the door.
3. Connect the scan tool to the data link connector.
4. Vehicle in Service Mode, engine OFF.
5. Clear all DTC's from all modules.

© Copyright Chevrolet. All rights reserved

Heated Seat Control Module Programming and Setup

Note:

- DO NOT program a control module unless directed to by a service procedure or a service bulletin. If the ECU is not properly configured with the correct calibration software, the ECU will not control all of the vehicle features properly.
- Ensure the programming tool is equipped with the latest software and is securely connected to the data link connector. If there is an interruption during programming, programming failure or ECU damage may occur.
- Stable battery voltage is critical during programming. Any fluctuation, spiking, over voltage or loss of voltage will interrupt programming. Install the *EL-49642* SPS Programming Support Tool to maintain system voltage. If not available, connect a fully charged 12 V jumper or booster pack disconnected from the AC voltage supply. DO NOT connect a battery charger.
- Turn OFF or disable systems that may put a load on the vehicles battery such as; interior lights, exterior lights (including daytime running lights), HVAC, radio, etc.
- During the programming procedure, follow the SPS prompts for the correct power mode.
- Clear DTCs after programming is complete. Clearing powertrain DTCs will set the Inspection/Maintenance (I/M) system status indicators to NO.

Replace and Program ECU or Reprogram ECU

To program a replacement or an existing ECU, perform the following procedure:

1. Install EL-49642 SPS Programming Support Tool .
2. Access the Service Programming System (SPS) and follow the on-screen instructions.
3. On the SPS Supported Controllers screen, select Seat Heating Control Module- Programming and follow the on-screen instructions.
4. At the end of programming, choose the "Clear All DTCs" function on the SPS screen.

Unsuccessful Programming Recovery

In the event of an interrupted or unsuccessful programming event, perform the following steps:

1. DO NOT turn the vehicle OFF. Ensure that all ECU, DLC and programming tool connections are secure and the TIS terminal operating software is up to date.
2. Attempt to reprogram the ECU.
3. If the ECU can still not be programmed, turn the vehicle OFF for at least one minute.
4. Vehicle in Service Mode, attempt to reprogram the ECU. The ECU should program.
   If the ECU still cannot be programmed, replace the ECU.

&#169© Copyright Chevrolet. All rights reserved

Hybrid Battery Interface Control Module Programming and Setup

Note:

- DO NOT program a control module unless directed to by a service procedure or a service bulletin. If the ECU is not properly configured with the correct calibration software, the ECU will not control all of the vehicle features properly.
- Ensure the programming tool is equipped with the latest software and is securely connected to the data link connector. If there is an interruption during programming, programming failure or ECU damage may occur.
- Stable battery voltage is critical during programming. Any fluctuation, spiking, over voltage or loss of voltage will interrupt programming. Install the *EL-49642* SPS Programming Support Tool to maintain system voltage. If not available, connect a fully charged 12 V jumper or booster pack disconnected from the AC voltage supply. DO NOT connect a battery charger.
- Turn OFF or disable systems that may put a load on the vehicles battery such as; interior lights, exterior lights (including daytime running lights), HVAC, radio, etc.
- During the programming procedure, follow the SPS prompts for the correct ignition switch position.
- Clear DTCs after programming is complete. Clearing powertrain DTCs will set the Inspection/Maintenance (I/M) system status indicators to NO.

Replace and Program ECU or Reprogram ECU

To program a replacement or an existing ECU, perform the following procedure:

1. Install *EL-49642* SPS programming support tool.
2. Access the Service Programming System (SPS) and follow the on-screen instructions.
3. On the SPS Supported Controllers screen, select Battery Energy Control Module - Programming and follow the on-screen instructions.
4. At the end of programming, choose the "Clear All DTCs" function on the SPS screen.

Unsuccessful Programming Recovery

In the event of an interrupted or unsuccessful programming event, perform the following steps:

1. DO NOT turn the Vehicle OFF. Ensure that all ECU, DLC and programming tool connections are secure and the TIS terminal operating software is up to date.
2. Attempt to reprogram the ECU.
3. If the ECU can still not be programmed, turn the Vehicle OFF for at least one minute.
4. Turn the Vehicle in Service Mode and attempt to reprogram the ECU. The ECU should program.
   If the ECU still cannot be programmed, replace the ECU.

&#169© Copyright Chevrolet. All rights reserved

Hybrid Powertrain Control Module 2 Programming and Setup

Note:

- DO NOT program a control module unless directed to by a service procedure or a service bulletin. If the ECU is not properly configured with the correct calibration software, the ECU will not control all of the vehicle features properly.
- Ensure the programming tool is equipped with the latest software and is securely connected to the data link connector. If there is an interruption during programming, programming failure or ECU damage may occur.
- Stable battery voltage is critical during programming. Any fluctuation, spiking, over voltage or loss of voltage will interrupt programming. Install the *EL-49642* SPS Programming Support Tool to maintain system voltage. If not available, connect a fully charged 12 V jumper or booster pack disconnected from the AC voltage supply. DO NOT connect a battery charger.
- Turn OFF or disable systems that may put a load on the vehicles battery such as; interior lights, exterior lights (including daytime running lights), HVAC, radio, etc.
- During the programming procedure, follow the SPS prompts for the correct ignition switch position.
- Clear DTCs after programming is complete. Clearing powertrain DTCs will set the Inspection/Maintenance (I/M) system status indicators to NO.

Replace and Program ECU or Reprogram ECU

To program a replacement or an existing ECU, perform the following procedure:

1. Install *EL-49642* SPS programming support tool.
2. Access the Service Programming System (SPS) and follow the on-screen instructions.
3. On the SPS Supported Controllers screen, select Hybrid Powertrain Control Module 2 - Programming and follow the on-screen instructions.
4. At the end of programming, choose the "Clear All DTCs"
5. With a scan tool, perform the Hybrid/EV Battery Pack Data Reset
6. With a scan tool, perform the Hybrid/EV Battery Pack Capacity Learn
7. With a scan tool, perform the Hybrid/EV Battery Pack Coolant Control Solenoid Valve Learn
8. With a scan tool, perform the Clear Secured High Voltage DTCs

Unsuccessful Programming Recovery

In the event of an interrupted or unsuccessful programming event, perform the following steps:

1. DO NOT turn the Vehicle OFF. Ensure that all ECU, DLC and programming tool connections are secure and the TIS terminal operating software is up to date.
2. Attempt to reprogram the ECU.
3. If the ECU can still not be programmed, turn the Vehicle OFF for at least one minute.

4. Turn the Vehicle in Service Mode and attempt to reprogram the ECU. The ECU should program.
   If the ECU still cannot be programmed, replace the ECU.

&#169© Copyright Chevrolet. All rights reserved

HVAC System Control Module Programming and Setup

Special Tools

EL-49642 SPS Programming Support Tool.

For equivalent regional tools, refer to Special Tools .

Note:

- DO NOT program a control module unless directed to by a service procedure or a service bulletin. If the ECU is not properly configured with the correct calibration software, the ECU will not control all of the vehicle features properly.
- Ensure the programming tool is equipped with the latest software and is securely connected to the data link connector. If there is an interruption during programming, programming failure or ECU damage may occur.
- Stable battery voltage is critical during programming. Any fluctuation, spiking, over voltage or loss of voltage will interrupt programming. Install the *EL-49642* SPS Programming Support Tool to maintain system voltage. If not available, connect a fully charged 12 V jumper or booster pack disconnected from the AC voltage supply. DO NOT connect a battery charger.
- Turn OFF or disable systems that may put a load on the vehicles battery such as; interior lights, exterior lights (including daytime running lights), HVAC, radio, etc.
- During the programming procedure, follow the SPS prompts for the correct ignition switch position.
- Clear DTCs after programming is complete. Clearing powertrain DTCs will set the Inspection/Maintenance (I/M) system status indicators to NO.

Diagnostic Aids

During HVAC programming you may be required to select multiple calibrations dependant upon vehicle equipment. Have the vehicle build/RPO information available during the following procedure to ensure the correct calibrations are selected.

Replace and Program ECU or Reprogram ECU

To program a replacement or an existing ECU, perform the following procedure:

1. Install EL-49642
2. Access the Service Programming System (SPS) and follow the on-screen instructions.
3. On the SPS Supported Controllers screen, select Remote Heater and Air Conditioning - Programming and follow the on-screen instructions.
4. At the end of programming, choose the "Clear All DTCs" function on the SPS screen.

Unsuccessful Programming Recovery

In the event of an interrupted or unsuccessful programming event, perform the following steps:

1. DO NOT turn the Vehicle OFF. Ensure that all ECU, DLC and programming tool connections are secure and the TIS terminal operating software is up to date.
2. Attempt to reprogram the ECU.
3. If the ECU can still not be programmed, turn the Vehicle OFF for at least one minute.
4. Turn the Vehicle in Service Mode and attempt to reprogram the ECU. The ECU should program.
   If the ECU still cannot be programmed, replace the ECU.

&#169© Copyright Chevrolet. All rights reserved

Inflatable Restraint Sensing and Diagnostic Module Programming and Setup

Special Tools

EL-49642 SPS Programming Support Tool.

For equivalent regional tools, refer to Special Tools .

Note:

- DO NOT program a control module unless directed to by a service procedure or a service bulletin. If the ECU is not properly configured with the correct calibration software, the ECU will not control all of the vehicle features properly.
- Ensure the programming tool is equipped with the latest software and is securely connected to the data link connector. If there is an interruption during programming, programming failure or ECU damage may occur.
- Stable battery voltage is critical during programming. Any fluctuation, spiking, over voltage or loss of voltage will interrupt programming. Install the *EL-49642* SPS Programming Support Tool to maintain system voltage. If not available, connect a fully charged 12 V jumper or booster pack disconnected from the AC voltage supply. DO NOT connect a battery charger.
- Turn OFF or disable systems that may put a load on the vehicles battery such as; interior lights, exterior lights (including daytime running lights), HVAC, radio, etc.
- During the programming procedure, follow the SPS prompts for the correct ignition switch position.
- Clear DTCs after programming is complete. Clearing powertrain DTCs will set the Inspection/Maintenance (I/M) system status indicators to NO.

Diagnostic Aids

The air bag indicator light may remain ON after the body control module (BCM), or SDM is replaced, and during the programming procedure for the BCM until after the procedure is completed. When installing a new SDM, there may be several DTCS set prior to programming. Once programmed, these DTCs should be history and can be cleared.

Replace and Program ECU or Reprogram ECU

To program a replacement or an existing Inflatable Restraint Sensing and Diagnostic Module, perform the following procedure:

1. Install EL-49642 SPS Programming Support Tool.
2. Access the Service Programming System (SPS) and follow the on-screen instructions.
3. On the SPS Supported Controllers screen, select Inflatable Restraint Sensing and Diagnostic Module - Programming and follow the on-screen instructions.
4. On the SPS Supported Controllers screen, select Inflatable Restraint Sensing and Diagnostic Module - Setup and follow the on-screen instructions.

5. At the end of programming, choose the "Clear All DTCs" function on the SPS screen.

Unsuccessful Programming Recovery

In the event of an interrupted or unsuccessful programming event, perform the following steps:

1. DO NOT turn the Vehicle OFF. Ensure that all ECU, DLC and programming tool connections are secure and the TIS terminal operating software is up to date.
2. Attempt to reprogram the ECU.
3. If the ECU can still not be programmed, turn the Vehicle OFF for at least one minute.
4. Put the Vehicle in Service Mode and attempt to reprogram the ECU. The ECU should program.
   If the ECU still cannot be programmed, replace the ECU.

&#169© Copyright Chevrolet. All rights reserved

Instrument Cluster Programming and Setup

Note:

- DO NOT program a control module unless directed to by a service procedure or a service bulletin. If the ECU is not properly configured with the correct calibration software, the ECU will not control all of the vehicle features properly.
- Ensure the programming tool is equipped with the latest software and is securely connected to the data link connector. If there is an interruption during programming, programming failure or ECU damage may occur.
- Stable battery voltage is critical during programming. Any fluctuation, spiking, over voltage or loss of voltage will interrupt programming. Install the *EL-49642* SPS Programming Support Tool to maintain system voltage. If not available, connect a fully charged 12 V jumper or booster pack disconnected from the AC voltage supply. DO NOT connect a battery charger.
- Turn OFF or disable systems that may put a load on the vehicles battery such as; interior lights, exterior lights (including daytime running lights), HVAC, radio, etc.
- During the programming procedure, follow the SPS prompts for the correct power mode.
- Clear DTCs after programming is complete. Clearing powertrain DTCs will set the Inspection/Maintenance (I/M) system status indicators to NO.

Replace and Program ECU or Reprogram ECU

Note: This procedure may require a USB flash drive. SPS will indicate if the flash drive is needed.

To program a replacement or an existing ECU, perform the following procedure:

1. Install EL-49642
2. Connect the USB flash drive to the SPS terminal/PC.
3. Access the Service Programming System (SPS) and follow the on-screen instructions.
4. On the SPS Supported Controllers screen, select Instrument Cluster - Prepare Control Module for Programming and follow the on-screen instructions. If the USB flash drive is needed perform steps 4.1 and 4.2. If the USB is not needed continue on to step 5.

   Note: SPS will indicate when it is safe to remove the flash drive from the SPS terminal.

   4.1. Physically remove the cluster while leaving the connector plugged in to access the USB port on the back of the cluster.
   4.2. Using cable EL-50344-2 from special tool kit EL-50334-50 , connect the USB flash drive to the instrument cluster.
5. On the SPS Supported Controllers screen, select Instrument Cluster - Programming and follow the on-screen instructions.

   Note: If the USB flash drive was required, the instrument cluster will automatically copy files from the flash drive. The SPS screen will indicate 100% completion but SPS will not say programming successful yet, the instrument cluster may still be programming. The instrument cluster screen will display a progression indicator while it is

copying files from the USB drive. Once all files are programmed, SPS will then indicate programming successful.

6. On the SPS Supported Controllers screen, select Instrument Cluster - Setup and follow the on-screen instructions.
7. On the SPS Supported Controllers screen, select Instrument Cluster - Configuration and follow the on-screen instructions.
8. At the end of programming, choose the "Clear All DTCs" function on the SPS screen.

Unsuccessful Programming Recovery

In the event of an interrupted or unsuccessful programming event, perform the following steps:

1. DO NOT turn the vehicle OFF. Ensure that all ECU, DLC and programming tool connections are secure and the TIS terminal operating software is up to date.
2. Attempt to reprogram the ECU.
3. If the ECU can still not be programmed, turn the vehicle OFF for at least one minute.
4. Vehicle in Service Mode, attempt to reprogram the ECU. The ECU should program.
   If the ECU still cannot be programmed, replace the ECU.

&#169© Copyright Chevrolet. All rights reserved

Keyless Entry Control Module Programming and Setup

Special Tools

EL-49642 SPS Programming Support Tool

For equivalent regional tools, refer to Special Tools .

Note:

- DO NOT program a control module unless directed to by a service procedure or a service bulletin. If the ECU is not properly configured with the correct calibration software, the ECU will not control all of the vehicle features properly.
- Ensure the programming tool is equipped with the latest software and is securely connected to the data link connector. If there is an interruption during programming, programming failure or ECU damage may occur.
- Stable battery voltage is critical during programming. Any fluctuation, spiking, over voltage or loss of voltage will interrupt programming. Install the *EL-49642* SPS Programming Support Tool to maintain system voltage. If not available, connect a fully charged 12 V jumper or booster pack disconnected from the AC voltage supply. DO NOT connect a battery charger.
- Turn OFF or disable systems that may put a load on the vehicles battery such as; interior lights, exterior lights (including daytime running lights), HVAC, radio, etc.
- During the programming procedure, follow the SPS prompts for the correct ignition switch position.
- Clear DTCs after programming is complete. Clearing powertrain DTCs will set the Inspection/Maintenance (I/M) system status indicators to NO.

Replace and Program ECU or Reprogram ECU

To program a replacement or an existing ECU, perform the following procedure:

1. Install *EL-49642* SPS Programming Support Tool .
2. Access the Service Programming System (SPS) and follow the on-screen instructions.
3. On the SPS Supported Controllers screen, select Keyless Entry Control Module - Programming and follow the on-screen instructions.
4. At the end of programming, choose the "Clear All DTCs" function on the SPS screen.

Unsuccessful Programming Recovery

In the event of an interrupted or unsuccessful programming event, perform the following steps:

1. DO NOT turn the ignition OFF. Ensure that all ECU, DLC and programming tool connections are secure and the TIS terminal operating software is up to date.

2. Attempt to reprogram the ECU.
3. If the ECU can still not be programmed, turn the ignition OFF for at least one minute.
4. Turn the ignition ON and attempt to reprogram the ECU. The ECU should program.
   If the ECU still cannot be programmed, replace the ECU.

&#169© Copyright Chevrolet. All rights reserved

Mobile Telephone Control Module Programming and Setup

The following service procedures require either a programming or a setup event performed for a complete repair. Do not reprogramme the mobile telephone control module, unless directed by a service procedure, or a service bulletin.

Mobile Telephone Control Module Replacement and/or Programming

If the mobile telephone control module needs to be replaced and/or reprogrammed, the following procedures must be performed:

1. Connect a scan tool to the vehicle and access SPS. Refer to Service Programming System (SPS) .
2. Perform the SPS function Mobile Telephone Control Module Programming and follow the on-screen instructions.
3. Perform the SPS function Onstar Activation and follow the on-screen instructions.
4. Clear DTCs after completing the programming procedure.

© Copyright Chevrolet. All rights reserved

Object Alarm Module Programming and Setup

Special Tools

EL-49642 SPS Programming Support Tool

For equivalent regional tools, refer to Special Tools .

Note:

- DO NOT program a control module unless directed to by a service procedure or a service bulletin. If the ECU is not properly configured with the correct calibration software, the ECU will not control all of the vehicle features properly.
- Ensure the programming tool is equipped with the latest software and is securely connected to the data link connector. If there is an interruption during programming, programming failure or ECU damage may occur.
- Stable battery voltage is critical during programming. Any fluctuation, spiking, over voltage or loss of voltage will interrupt programming. Install the *EL-49642* SPS Programming Support Tool to maintain system voltage. If not available, connect a fully charged 12 V jumper or booster pack disconnected from the AC voltage supply. DO NOT connect a battery charger.
- Turn OFF or disable systems that may put a load on the vehicles battery such as; interior lights, exterior lights (including daytime running lights), HVAC, radio, etc.
- During the programming procedure, follow the SPS prompts for the correct ignition switch position.
- Clear DTCs after programming is complete. Clearing powertrain DTCs will set the Inspection/Maintenance (I/M) system status indicators to NO.

Replace and Program ECU

To program a replacement ECU, perform the following procedure:

1. Install *EL-49642* SPS programming support tool .
2. Access the Service Programming System (SPS) and follow the on-screen instructions.
3. On the SPS Supported Controllers screen, select Parking Assist Control Module - Programming and follow the on-screen instructions.
4. On the SPS Supported Controllers screen, select Parking Assist Control Module - Configuration and follow the on-screen instructions.
5. At the end of programming, choose the "Clear All DTCs" function on the SPS screen.

Reprogram ECU

To reprogram an existing ECU, perform the following procedure:

1. Install *EL-49642* SPS programming support tool .
2. Access the Service Programming System (SPS) and follow the on-screen instructions.
3. On the SPS Supported Controllers screen, select Parking Assist Control Module - Programming and follow the on-screen instructions.
4. At the end of programming, choose the "Clear All DTCs" function on the SPS screen.

Unsuccessful Programming Recovery

In the event of an interrupted or unsuccessful programming event, perform the following steps:

1. DO NOT turn the Vehicle OFF. Ensure that all ECU, DLC and programming tool connections are secure and the TIS terminal operating software is up to date.
2. Attempt to reprogram the ECU.
3. If the ECU can still not be programmed, turn the Vehicle OFF for at least one minute.
4. Turn the Vehicle in Service Mode and attempt to reprogram the ECU. The ECU should program.
   If the ECU still cannot be programmed, replace the ECU.

&#169© Copyright Chevrolet. All rights reserved

Passenger Presence System Programming and Setup

Passenger Presence System Preload Test

The passenger presence system (PPS) consists of an electronic control module, a conductive based sensor mat, wiring harness, and PASSENGER AIR BAG ON/OFF indicators. The sensor mat is made up of several flexible conductive metal strips placed underneath the seat cushion trim. These sensor strips transmit and receive a low level electric field. The measured capacitance value of this field is used to determine the type of occupant sitting in the front passenger seat. If the passenger seat bottom cushion, seat bottom trim, or heater pad has been serviced, reinstalled, or removed for any reason, the procedure below will check for any preloads on the PPS. A service replacement PPS module does not require an unlock procedure prior to an initial preload test.

Note:

- Before the PPS can be checked for preloads the front passenger seat must be completely empty of all items. The presence of any items on the front passenger seat will affect the calibration and operation of the PPS. When the preload test is perform, the instrument panel cluster (IPC) and dash lights will begin illuminating at varying intensity. This is normal operation during the preload test procedure and does not indicate additional system faults.
- The Diagnostic System Check - Vehicle must be performed after successfully completing the preload test procedure to ensure the system is functioning properly.

Passenger Presence System Preload System Test

1. Empty the front outboard passenger seat (this system is susceptible to conductive material).
2. With the scan tool, perform the Preload Passenger Presence System procedure.
3. Using the scan tool, check for DTC B0081 in history. If the test fails or DTC B0081 11 is current, confirm that the seat is empty. Perform the passenger presence sensor learn test again. If the test fails again, for heated seats, ensure that the sensor pad is on top of the heater element. Once the test successfully completes, cycle the Vehicle OFF.
4. Perform the Diagnostic System Check - Vehicle after successfully completing the preload test procedure to ensure the system is functioning properly.

&#169© Copyright Chevrolet. All rights reserved

Power Steering Control Module Programming and Setup

Note:

- DO NOT program a control module unless directed to by a service procedure or a service bulletin. If the ECU is not properly configured with the correct calibration software, the ECU will not control all of the vehicle features properly.
- Ensure the programming tool is equipped with the latest software and is securely connected to the data link connector. If there is an interruption during programming, programming failure or ECU damage may occur.
- Stable battery voltage is critical during programming. Any fluctuation, spiking, over voltage or loss of voltage will interrupt programming. Install the *EL-49642* SPS Programming Support Tool to maintain system voltage. If not available, connect a fully charged 12 V jumper or booster pack disconnected from the AC voltage supply. DO NOT connect a battery charger.
- Turn OFF or disable systems that may put a load on the vehicles battery such as; interior lights, exterior lights (including daytime running lights), HVAC, radio, etc.
- During the programming procedure, follow the SPS prompts for the correct ignition switch position.
- Clear DTCs after programming is complete. Clearing powertrain DTCs will set the Inspection/Maintenance (I/M) system status indicators to NO.

Replace and Program ECU or Reprogram ECU

To program a replacement or an existing ECU, perform the following procedure:

1. Install EL-49642
2. Access the Service Programming System (SPS) and follow the on-screen instructions.

   Note: The Prepare Control Module for Programming function can only be performed when communication with the old control module is still possible.

3. On the SPS Supported Controllers screen, select Electronic Power Steering Control Module - Prepare Control Module for Removal and follow the on-screen instructions.
4. Replace the Electric Power Steering Control Module
5. On the SPS Supported Controllers screen, select Electronic Power Steering Control Module - Programming and follow the on-screen instructions.
6. On the SPS Supported Controllers screen, select Electronic Power Steering Control Module - Setup and follow the on-screen instructions.
7. At the end of programming, choose the "Clear All DTCs" function on the SPS screen.
8. With a scan tool, perform the steering angle sensor centering and software endstop relearn. Refer to Power Steering Control Module Calibration

&#169© Copyright Chevrolet. All rights reserved

Radio Control Programming and Setup

Replace and Program ECU or Reprogram ECU

This ECU does not require SPS programming or any set-up procedures.

© Copyright Chevrolet. All rights reserved

Radio Programming and Setup

Special Tools

EL-49642 SPS Programming Support Tool.

For equivalent regional tools, refer to Special Tools .

Note:

- DO NOT program a control module unless directed to by a service procedure or a service bulletin. If the ECU is not properly configured with the correct calibration software, the ECU will not control all of the vehicle features properly.
- Ensure the programming tool is equipped with the latest software and is securely connected to the data link connector. If there is an interruption during programming, programming failure or ECU damage may occur.
- Stable battery voltage is critical during programming. Any fluctuation, spiking, over voltage or loss of voltage will interrupt programming. Install the *EL-49642* SPS Programming Support Tool to maintain system voltage. If not available, connect a fully charged 12 V jumper or booster pack disconnected from the AC voltage supply. DO NOT connect a battery charger.
- Turn OFF or disable systems that may put a load on the vehicles battery such as; interior lights, exterior lights (including daytime running lights), HVAC, radio, etc.
- During the programming procedure, follow the SPS prompts for the correct ignition switch position.
- Clear DTCs after programming is complete. Clearing powertrain DTCs will set the Inspection/Maintenance (I/M) system status indicators to NO.

Diagnostic Aids

- During radio programming you may be required to select multiple calibrations dependant upon vehicle equipment. Have the vehicle build/RPO information available during the following procedure to ensure the correct calibrations are selected.
- The XM satellite radio (if equipped) is integrated into the radio. If XM was activated in the previous radio, the replacement radio will require no additional activation steps. Customer subscription information is transferred to the replacement radio when a replacement radio is ordered.

Replace and Program ECU or Reprogram ECU

To program a replacement or an existing ECU, perform the following procedure:

1. Install EL-49642
2. Access the Service Programming System (SPS) and follow the on-screen instructions.

3. On the SPS Supported Controllers screen, select Radio - Programming and follow the on-screen instructions.
4. At the end of programming, choose the "Clear All DTCs" function on the SPS screen.

Unsuccessful Programming Recovery

In the event of an interrupted or unsuccessful programming event, perform the following steps:

1. DO NOT turn the Vehicle OFF. Ensure that all ECU, DLC and programming tool connections are secure and the TIS terminal operating software is up to date.
2. Attempt to reprogram the ECU.
3. If the ECU can still not be programmed, turn the Vehicle OFF for at least one minute.
4. Turn the Vehicle in Service Mode and attempt to reprogram the ECU. The ECU should program.
   If the ECU still cannot be programmed, replace the ECU.

&#169© Copyright Chevrolet. All rights reserved

Remote Control Door Lock Receiver Programming and Setup

Diagnostic Aids

The remote control door lock receiver only functions as an aerial, receiving the signals sent by the keyless entry transmitter and forwarding them to the body control module (BCM). The keyless entry software is contained wholly within the BCM.

Replace and Program ECU or Reprogram ECU

This ECU does not require SPS programming or any set-up procedures.

© Copyright Chevrolet. All rights reserved

Steering Column Lock Control Module Programming and Setup

The following service procedures require either a programming or a setup event performed for a complete repair.

Steering Column Lock Control Module Replacement

If the steering column lock control module needs to be replaced, the following procedures must be performed:

1. Connect a scan tool to the vehicle and access SPS. Refer to Service Programming System (SPS) .
2. Perform the SPS function Steering Column Lock Control Module - Programming and follow the on-screen instructions.
3. Perform the SPS function Steering Column Lock Control Module - Configuration & Setup and follow the on-screen instructions. On the screen Control Module - Configuration and Setup Function(s), select both ECU Configuration/Reconfiguration and ECU Setup.
4. Clear DTCs after completing the programming procedure.

Steering Column Lock Control Module Reprogramming

If the steering column lock control module needs to be reprogrammed, the following procedures must be performed:

1. Connect a scan tool to the vehicle and access SPS. Refer to Service Programming System (SPS) .
2. Perform the SPS function Steering Column Lock Control Module - Programming and follow the on-screen instructions.
3. Clear DTCs after completing the programming procedure.

© Copyright Chevrolet. All rights reserved

Theft Deterrent Module Programming and Setup

Diagnostic Aids

The theft deterrent module only functions as an exciter and aerial, energising the key transponder and receiving the key code information. The immobiliser software is contained wholly in the body control module (BCM).

Replace and Program ECU or Reprogram ECU

This ECU does not require SPS programming or any set-up procedures.

© Copyright Chevrolet. All rights reserved

Tyre Pressure Indicator Receiver Programming and Setup

Replace and Program ECU or Reprogram ECU

This ECU does not require SPS programming but does require the following setup procedures after a new ECU is installed:

Drive the vehicle for at least 9 minutes above 40 km/h (25 MPH) to perform the K65 tyre pressure indicator module autolearn process.

© Copyright Chevrolet. All rights reserved

Special Tools

Illustration	Tool Number/ Description
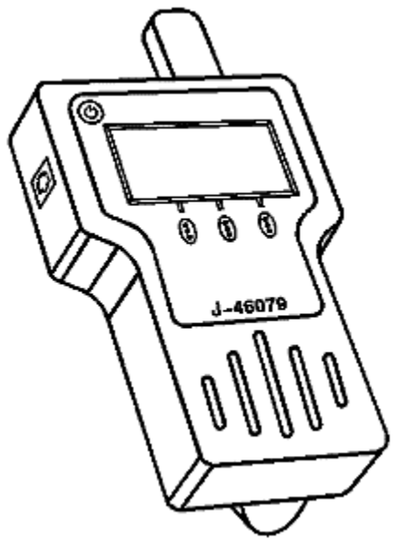	EL 46079 J 46079 Tyre Pressure Monitor Diagnostic Tool
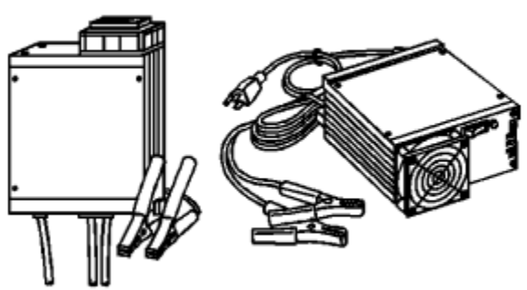	EL 49642 EL 50113 Europe - Use recommended equivalent workshop equipment SPS Programming Support Tool

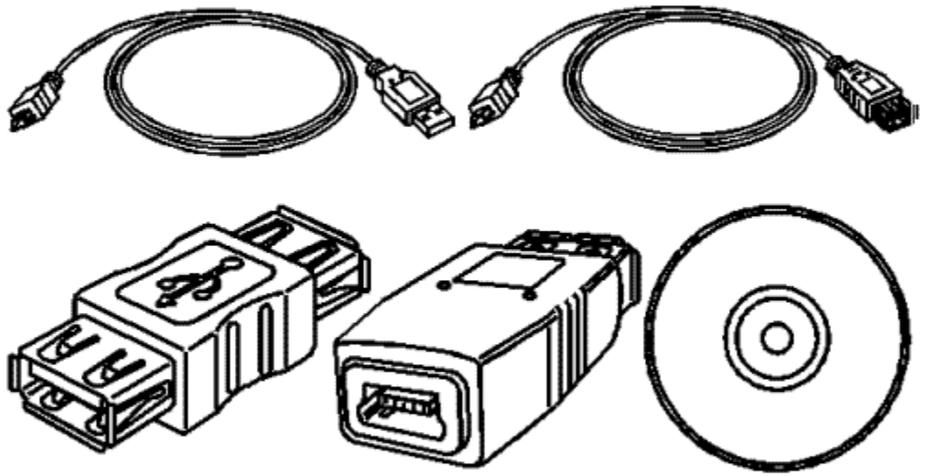

EL 50334-50

USB Cable and Adapter Kit

© Copyright Chevrolet. All rights reserved

Body Control Module Scan Tool Information

Table 1: Body Control Module Scan Tool Data Parameters
Table 2: Body Control Module Scan Tool Output Controls

Body Control Module Scan Tool Data Parameters

Parameter	System State	Expected Value	Definition
Operating Conditions: Vehicle in Service Mode, Vehicle in Park, All Doors Closed			
Accent Lighting 1 Command	-	Varies	This parameter displays the interior lighting ambient 1 command as a percentage.
Accessory	-	Active	The scan tool displays Active or Inactive.
Accessory Power Mode Indicator Command	-	Varies	This parameter displays ignition switch accessory LED PWM command as a percentage.
Accessory Relay Command	-	Active	The scan tool displays Active or Inactive.
Accessory/Retained Accessory Power Relay Command	-	Active	The scan tool displays Active or Inactive. This parameter displays the retained accessory power relay status.
All Door Lock Command	-	Inactive	The scan tool displays Active or Inactive. This parameter displays the door lock status.
Ambient Light Sensor	-	Varies	The scan tool displays volts. This parameter displays the ambient light sensor signal voltage.
Ambient Light Status	-	Night	The scan tool displays Unknown, Night, or Day. This parameter displays the ambient light level status.
Automatic Headlamps Disable Switch	-	Inactive	The scan tool displays Active or Inactive. This parameter displays the headlamp disable switch status.
Automatic Transmission	-	Off	The scan tool displays Off or On. This parameter displays the transmission tap up tap down switch status.

Manual Shift Switch			
Reverse Lamps Relay Command	-	Inactive	The scan tool displays Active or Inactive. This parameter displays the reverse lamps relay status.
Battery Low at Start	-	Inactive	The scan tool displays Active or Inactive. This parameter displays Active when the battery level is low when the vehicle starts.
Battery Reconnect Detected	-	No	The scan tool displays No or Yes when a battery disconnect/reconnect event has been detected.
Battery Voltage	-	Varies	The scan tool displays the current battery voltage.
BCM-Controlled Charging Voltage	-	Active	The scan tool displays Active or Inactive.
BCM-Requested Charging Voltage Reduction	-	Inactive	The scan tool displays Active or Inactive. This parameter displays Active when the BCM has detected a low battery voltage condition.
Boot Software Part Number	-	Varies	The scan tool displays the boot software part number.
Brake Lamp Command	-	Inactive	The scan tool displays Active or Inactive. This parameter displays the brake lamp command status.
Brake Pedal Initial Travel Position Achieved	-	No	The scan tool displays No or Yes.
Brake Pedal Position Sensor High Voltage During Learn	-	No	The scan tool displays No or Yes.
Brake Pedal Position Sensor Learn	-	No	The scan tool displays No or Yes. This parameter displays Yes when the brake pedal position sensor has learned.
Brake Pedal Position Sensor Learned Home Position	-	Yes	The scan tool displays No or Yes. This parameter displays Yes when the brake pedal position sensor has learned the home position.
Brake Pedal Position Sensor Low Voltage During Learn	-	No	The scan tool displays No or Yes.
Brake Pedal Position Sensor Move During Learn	-	No	The scan tool displays No or Yes. This parameter displays the brake pedal sensor learn status.
Brake Pedal			

Position Sensor Pulled Up from Home Position	-	No	The scan tool displays No or Yes.
Brake Pedal Position Sensor Reference	-	Varies	The scan tool displays the brake pedal position as voltage value. This parameter displays the current brake pedal position sensor reference.
Brake Pedal Pulled Up from Home Position	-	No	The scan tool displays No or Yes.
Brake Transmission Shift Interlock Solenoid Actuator	-	Inactive	The scan tool displays Active or Inactive. This parameter displays the remote start diagnostic status history.
Brake Transmission Shift Interlock Solenoid Actuator Command	-	Inactive	The scan tool displays Active or Inactive. This parameter displays the last remote start diagnostic status history.
Calibration Part Number 1-20	-	Varies	The scan tool displays the software module calibration part number.
Centre Brake Lamp Command	-	Inactive	The scan tool displays Active or Inactive. This parameter displays the centre brake lamp status.
Central Door Lock Switch on Centre Console	-	Inactive	The scan tool displays Active or Inactive. This parameter displays the driver door lock switch status.
Child Security Lock Indicator Command	-	Inactive	The scan tool displays Active or Inactive. This parameter displays the child security lock indicator command status.
Content Theft Deterrent Alarm Status	-	Disarmed	The scan tool displays Off, Armed, or Disarmed. This parameter displays the content theft alarm status.
Content Theft Deterrent Disarmed Until Vehicle Closed	-	No	The scan tool displays No or Yes. This parameter displays the content theft deterrent system status.
Content Theft Deterrent Mode	-	Inactive	The scan tool displays Active or Inactive. This parameter displays the remote start diagnostic status history or the last remote start diagnostic status history.
Content Theft Deterrent Trigger History 1-3	-	None	The scan tool displays None, Driver door, Passenger door, Left rear door, Right rear door, Rear closure, Midgate, Tonneau Cover, Bonnet, Ignition Voltage, Intrusion, Inclination, Telematics enhanced service alarm, Battery reconnect detected, Unauthorised PWM change, Security Indicates Tamper, or Glass Breakage. This parameter displays the content theft deterrent trigger history status.
Courtesy Lamps			

Duty Cycle Command	-	Varies	This parameter displays the interior lights dimming command as a percentage.
Crank Abort	-	Inactive	This parameter displays the remote start diagnostic status history or the last remote start diagnostic status history.
Cruise Charging Set Level	-	Varies	This parameter displays cruise charging set level.
Cruise Control Switch Status	-	OFF	The scan tool displays CANCEL, OFF, ON, RESUME, SET or ERROR. This parameter displays the cruise control switch status.
Current Content Theft Deterrent Trigger	-	None	The scan tool displays None, Driver door, Passenger door, Left rear door, Right rear door, Rear closure, Midgate, Tonneau Cover, Bonnet, Ignition Voltage, Intrusion, Inclination, Telematics enhanced service alarm, Battery reconnect detected, Unauthorised PWM change, Security Indicates Tamper, Glass Breakage. This parameter displays the content theft deterrent current alarm trigger.
Current Driver	-	1-8	This parameter displays the current driver in vehicle.
Disable Battery Saver Relay Command	-	Inactive	The scan tool displays Active or Inactive.
Interior light Switch	-	Inactive	The scan tool displays Active or Inactive. This parameter displays the interior light switch status.
Driver Door Ajar Switch	-	Inactive	The scan tool displays Active or Inactive. This parameter displays the driver door Ajar switch status.
Driver Door Unlock Command	-	Inactive	The scan tool displays Active or Inactive. This parameter displays the driver door unlock command status.
Driver Window Learned	-	Yes	The scan tool displays No or Yes.
Driver Window Main Control Down Switch	-	Inactive	The scan tool displays Active or Inactive. This parameter displays the driver window main control down switch input status.
Driver Window Main Control Express Switch	-	Inactive	The scan tool displays Active or Inactive. This parameter displays the driver window switch express input status.
Driver Window Main Control Up Switch	-	Inactive	The scan tool displays Active or Inactive. This parameter displays the driver window switch UP input status.
Driver Window Motor Mode	-	Local Switch Overridden	The scan tool displays Down, Express Down, Express, Up, Error, Inhibit, or Local Switch Overridden. This parameter displays the driver window motor mode status.
Enable Battery Saver Relay Command	-	Inactive	The scan tool displays Active or Inactive.
End Model Part Number	-	Varies	This parameter displays the end model part number.
Engine Stalled	-	Inactive	This parameter displays the remote start diagnostic status history or the last remote start diagnostic status history.

Environment Identification	-	Unknown	The parameter displays the vehicle environment identification successful status.
Environment Identification	-	Inactive	The scan tool displays Active or Inactive. This parameter displays the front fog lamps status.
Front Fog Lamps Relay Command	-	Inactive	The scan tool displays Active or Inactive. This parameter displays the front fog light relay status.
Front Fog Lamps Switch	-	Inactive	The scan tool displays Active or Inactive. This parameter displays the front fog lamp switch status.
Front Passenger Window Main Control Down Switch	-	Inactive	The scan tool displays Active or Inactive. This parameter displays the front passenger window down switch status.
Front Passenger Window Main Control Express Switch	-	Inactive	The scan tool displays Active or Inactive. This parameter displays the passenger window switch express input status.
Front Passenger Window Main Control Up Switch	-	Inactive	The scan tool displays Active or Inactive. This parameter displays the passenger window switch UP input status.
Front Tyre Pressure on Placard	-	Varies	The scan tool displays kPa or PSI. This parameter displays the specified tyre pressure placard information programmed in the BCM for tyre pressure monitoring.
Fuel Economy Mode Inhibited - Low Charging Voltage	-	Inactive	The scan tool displays Active or Inactive. This parameter displays the fuel economy mode status.
Generator Regulator Setpoint	-	Varies	The scan tool displays percentage.
Hazard Lamps Switch	-	Inactive	The scan tool displays Active or Inactive. This parameter displays the hazard lamps switch status.
Hazard Lamps Switch Backlight Command	-	Varies	The scan tool displays percentage. This parameter displays hazard switch backlight level PWM command status.
Headlamps On Switch	-	Inactive	The scan tool displays Active or Inactive. This parameter displays the headlamp on switch status.
Headlamps Flash Switch	-	Inactive	The scan tool displays Active or Inactive. This parameter displays the headlamps flash to pass switch status.
Main Beam Select Switch	-	Inactive	The scan tool displays Active or Inactive. This parameter displays the main beam switch status.

Main Beam Command	-	Inactive	The scan tool displays Active or Inactive. This parameter displays the main beam command status.
Bonnet Ajar Switch	-	Inactive	This parameter display the remote start diagnostic status history or the last remote start diagnostic status history.
Bonnet Ajar Switch Signal 1	-	Inactive	This parameter display the remote start diagnostic status history or the last remote start diagnostic status history.
Bonnet Position	-	CLOSED	The scan tool displays CLOSED, AJAR, or OPENED. This parameter displays the bonnet position.
Horn Relay Command	-	Inactive	The scan tool displays Active or Inactive.
Horn Switch	-	Inactive	The scan tool displays Active or Inactive.
Idle Boost Level 2-3 Counter	-	Varies	This parameter displays the state of the idle boost level as counts.
Idle Charging Set Level	-	Varies	This parameter displays idle charging set level.
Immobiliser Allows Engine To Start	-	Unknown	The scan tool displays Unknown, Incorrect, Not Allowed, or Valid. This parameter displays the immobiliser status.
Immobiliser Automatic Learn Timer	-	Inactive	The scan tool displays Active or Inactive. This parameter displays the automatic learn timer status.
Immobiliser Environment Device 1-4	-	Unknown	The scan tool displays Incorrect, Correct, Not Received, Not Programmed or Unknown. This parameter displays the immobiliser source status.
Immobiliser Password Learn	-	Inactive	The scan tool displays Active or Inactive. This parameter displays the password learn status.
Immobiliser Password Learn Scan Tool Delay	-	Varies	This parameter displays the auto learn timer status.
Immobiliser Security Code Accepted	-	No	The scan tool displays No or Yes.
Immobiliser Security Code Lockout	-	No	The scan tool displays No or Yes.
Immobiliser Security Code Programmed	-	Yes	The scan tool displays No or Yes.
In Park Switch Status	-	On	The scan tool displays On or Off. This parameter displays the park switch status.
Inadvertent Load			

Command	-	Active	The scan tool displays Active or Inactive.
Indicator Dimming Duty Cycle Command	-	Varies	The scan tool displays percentage. This parameter displays indicator lighting PWM command status.
Interior/Courtesy Lighting Master Switch	-	Door	The scan tool displays Door or other lighting switch status.
Interior Boot Lid/Tailgate Window Unlatch Switch	-	Inactive	The scan tool displays Active or Inactive.
Key Capture Solenoid Actuator	-	Active	The scan tool display Active or Inactive. This parameter displays column lock input status.
Key Fob 1-4 Battery Status	-	OK	The scan tool displays OK or other key fob battery status. This parameter displays the key fob battery status.
Key Fob 1-4 Function	-	Undefined	The scan tool displays Inactive, Lock, Unlock Driver Door, All Door Unlock, Release Rear Closure, Actuate Left Sliding Door, Actuate Right Sliding door, Panic Alarm, Release Fuel door, Actuate Power Windows, Actuate Folding Top, Start Engine, Stop Engine, Programmed, Locator Alarm, Close Tailgate, Open Tailgate, Stop Tailgate While Closing, Stop Tailgate While opening, Deadlock All Doors, Stop Tailgate Motion, Start Tailgate Motion, Stop Left Sliding Door Motion, Stop Right Sliding Door Motion, Comfort open, or Comfort close. This parameter displays the key fob function status.
Key Fob in Vehicle	-	Inactive	This parameter displays the current key fob in the vehicle.
Key In Cylinder Switch	-	Active	The scan tool displays Active or Inactive.
Key In Cylinder Switch/Key Fob in Vehicle	-	Yes	The scan tool displays No or Yes.
Key in Ignition Status	-	Inactive	The scan tool displays Key Out or Key In. This parameter displays the key in ignition status.
Key Part Number	-	Varies	This parameter displays the key part number.
Key Type	-	Master Key	The scan tool displays Unknown, Master Key, Valet Key, Fleet Key, or Unconfigured. This parameter displays the key type.
Last Door Lock Function	-	All Doors Lock	The scan tool displays NO Action, PC UNDB Lock, PC Unlock, Unlock, Unlock Driver, Unlock Passenger, Unlock Left Rear, Unlock Right Rear, Unlock Cargo Tailgate, Unlock Driver Side, Unlock Passenger Side, Unlock Non Driver, Unlock All, Lock All, DBL Lock, or UNDBL Lock.
LED Backlight Dimming Command	-	Varies	The scan tool displays as a percentage. This parameter displays LED backlight dimming PWM command status.
Left Brake Lamp	-	Varies	The scan tool displays percentage. This parameter displays left brake lamp command status.

Command			
Left Dedicated Daytime Running Lamp Command	-	Varies	The scan tool displays percentage. This parameter displays left dedicated daytime running lamp command status.
Left Front Tyre Pressure	-	Varies	This parameter displays left front tyre pressure in PSI.
Left Front Tyre Pressure Identification	-	Varies	This parameter displays left front tyre pressure sensor ID.
Left Front Tyre Pressure Sensor Location Learned	-	Yes	The scan tool displays No or Yes. This parameter display tyre pressure monitor system learned status.
Left Front Tyre Pressure Sensor Mode	-	Learn Mode -- Pressure Triggered	The scan tool parameter displays Learn Mode, Undefined, Remeasure Data Mode, Rolling Mode, Enter Off Mode, Exit Off Mode, or Learn Mode Pressure Triggered.
Left Front Tyre Pressure Status	-	Normal	The scan tool displays Unknown, Normal, Very Low Pressure, Low, Weak Signal, or High.
Left Front Indicator Bulb Out Feedback	-	Inactive	The scan tool displays Active or Inactive.
Left Front Indicator/Hazard Lamp Command	-	Inactive	The scan tool displays Active or Inactive.
Left Dipped Beam/Daytime Running Light Command	-	Varies	The scan tool displays percentage. This parameter displays left dipped beam/daytime running lamp status.
Left Sidelights Command	-	Varies	The scan tool displays percentage. This parameter displays rear exterior lighting status.
Left Rear Door Ajar Switch	-	Inactive	This parameter displays Active or Inactive. This parameter displays the left rear door ajar switch status.
Left Rear Tyre Pressure	-	Varies	This parameter displays left rear tyre pressure in PSI.
Left Rear Tyre Pressure Identification	-	Varies	This parameter displays left rear tyre pressure sensor ID.
Left Rear Tyre Pressure Sensor	-	Yes	The scan tool displays No or Yes. This parameter displays tyre pressure monitor system learned status.

Location Learned			
Left Rear Tyre Pressure Sensor Mode	-	Stationary	The scan tool displays Learn Mode, Undefined, Remeasure Data Mode, Rolling Mode, Enter Off Mode, Exit Off Mode, or Learn Mode Pressure Triggered.
Left Rear Tyre Pressure Status	-	Normal	The scan tool displays Unknown, Normal, Very Low Pressure, Low, Weak Signal, or High.
Left Rear Indicator Bulb Out Feedback	-	Inactive	The scan tool displays Active or Inactive. The parameter displays indicator lamp outage status.
Left Rear Indicator/Hazard Lamp Command	-	Inactive	The scan tool displays Active or Inactive.
Left Rear Window Main Control Down Switch	-	Inactive	The scan tool display Active or Inactive. This parameter displays driver window switch inputs.
Left Rear Window Main Control Express Switch	-	Inactive	The scan tool display Active or Inactive. This parameter displays driver window switch inputs.
Left Rear Window Main Control Up Switch	-	Inactive	The scan tool displays Active or Inactive. This parameter displays driver window switch inputs.
Left Rear Window Motor Mode	-	Local Switch Overridden	The scan tool displays Down, Express, Up, Inhibit, or Local Switch Overridden.
Left Rear Window Switch at Door	-	Inactive	The scan tool displays Active or Inactive.
Left Indicator Switch	-	Inactive	The scan tool displays Active or Inactive. This parameter displays the left indicator switch status.
Number Plate Lamps Command	-	Inactive	The scan tool displays Active or Inactive.
Load Reduction Level 2-3 Counter	-	Varies	The scan tool display as counts.
Dipped Beam Relay Command	-	Inactive	The scan tool displays Active or Inactive. This parameter displays the headlamp dipped beam relay status.
Manufacturers Enable Counter	-	Varies	This parameter tool displays various counter values.
Master Keys Learned	-	Varies	This parameter displays the total number of master keys learned.
Module Diagnostic			

Address	-	Varies	This parameter displays module diagnostic address.
Number of Key Fobs In Vehicle	--	1	This parameter displays the number of fobs located in the vehicle.
Odometer	-	Varies	This parameter displays the vehicle mileage.
Outside Rear View Mirror Courtesy Lamp Command	-	Inactive	The scan tool displays Active or Inactive. This parameter displays front exterior lighting status.
Hand Brake Switch	-	Active	The scan tool displays Active or Inactive. This parameter displays front exterior lighting status.
Sidelights Switch	-	Inactive	The scan tool displays Active or Inactive. This parameter displays Active when the sidelight switch is activated.
Passenger Door Ajar Switch	-	Inactive	The scan tool displays Active or Inactive. This parameter displays the passenger door ajar switch status.
Passenger Door Lock Switch	-	Inactive	The scan tool displays Active or Inactive. This parameter displays the passenger door lock switch status.
Passenger Door Unlock Switch	-	Inactive	The scan tool displays Active or Inactive. This parameter displays the passenger door unlock switch status.
Passenger Door(s) Unlock Command	-	Inactive	The scan tool displays Active or Inactive. This parameter displays the passenger door unlock status.
Passenger Window Learned	-	Yes	The scan tool displays No or Yes. This parameter displays the passenger window learned status.
Passenger Window Motor Mode	-	Local Switch Overridden	The scan tool displays Down, Express, Up, Inhibit, or Local Switch Overridden.
Passenger Window Switch at Door	-	Inactive	The scan tool displays Active or Inactive. This parameter displays the passenger window switch status.
Previous Key Type	-	Unknown	This parameter displays previous driver identification device type.
Primary Key Status	-	Yes	The scan tool displays No or Yes.
Push Button Ignition Switch	-	Inactive	The scan tool displays Active or Inactive.
Push Button Ignition Switch Voltage	-	Varies	This parameter displays the push button ignition switch voltage.
Rear Closure Ajar Switch	-	Active	The scan tool displays Active or Inactive.
Rear Closure Cylinder Lock Switch	-	Inactive	The scan tool displays Active or Inactive.
Rear Closure			

Cylinder Unlock Switch	-	Inactive	The scan tool displays Active or Inactive.
Rear Tyre Pressure on Placard	-	Varies	This parameter displays the rear tyre pressure in kPa or PSI. This parameter displays the specified tyre pressure placard information programmed in the BCM for tyre pressure monitoring.
Regulated Voltage Control Mode	-	Voltage	The scan tool displays voltage.
Remote Vehicle Start Attempts Exhausted	-	Varies	This parameter displays the remote start diagnostic status history or the last remote start diagnostic status history or remaining start attempts.
Remote Vehicle Start Crank Time	-	Inactive	This parameter displays the remote start diagnostic status history or the last remote start diagnostic status history.
Remote Vehicle Start Disabled by Driver	-	Inactive	This parameter displays the remote start diagnostic status history or the last remote start diagnostic status history.
Remote Vehicle Start Source	-	Ignition Switch Start	The scan tool displays Body Control module or Power Take-off Start.
Remote Vehicle Starts Exhausted	-	Varies	This parameter displays the remote start diagnostic status history or the last remote start diagnostic status history or remaining remote starts.
Right Brake Lamp Command	-	Varies	The scan tool display percentage. This parameter displays right brake lamp PWM command status.
Right Dedicated Daytime Running Lamp Command	-	Varies	The scan tool display percentage. This parameter displays right dedicated DRL PWM command status.
Right Front Tyre Pressure	-	Varies	This parameter displays right front tyre pressure in PSI.
Right Front Tyre Pressure Identification	-	Varies	This parameter displays right front tyre pressure sensor ID.
Right Front Tyre Pressure Sensor Location Learned	-	Yes	The scan tool displays No or Yes.
Right Front Tyre Pressure Sensor Mode	-	Stationary	The scan tool displays Learn Mode, Undefined, Remeasure Data Mode, Rolling Mode, Enter Off Mode, Exit Off Mode, or Learn Mode Pressure Triggered.
Right Front Tyre Pressure Status	-	Normal	The scan tool displays Unknown, Normal, Very Low Pressure, Low, Weak Signal, or High.
Right Front			

Indicator Bulb Out Feedback	-	Inactive	The scan tool displays Active or Inactive.
Right Front Indicator/Hazard Lamp Command	-	Inactive	The scan tool displays Active or Inactive.
Right Dipped Beam/Daytime Running Light Command	-	Varies	The scan tool displays percentage. This parameter displays right dipped beam/daytime running lamp status.
Right Sidelights Command	-	Varies	The scan tool displays percentage. This parameter displays rear exterior lighting status.
Right Rear Door Ajar Switch	-	Inactive	The scan tool displays Active or Inactive.
Right Rear Tyre Pressure	-	Varies	This parameter displays right rear tyre pressure in PSI.
Right Rear Tyre Pressure Identification	-	Varies	This parameter displays right rear tyre pressure sensor ID.
Right Rear Tyre Pressure Sensor Location Learned	-	Yes	The scan tool displays No or Yes.
Right Rear Tyre Pressure Sensor Mode	-	Learn Mode -- Pressure Triggered	The scan tool displays Learn Mode, Undefined, Remeasure Data Mode, Rolling Mode, Enter Off Mode, Exit Off Mode, or Learn Mode Pressure Triggered. This parameter displays the pressure sensor mode status.
Right Rear Tyre Pressure Status	-	Normal	The scan tool displays Unknown, Normal, Very Low Pressure, Low, Weak Signal, or High. This parameter displays the right rear tyre pressure status.
Right Rear Indicator Bulb Out Feedback	-	Inactive	The scan tool displays Active or Inactive.
Right Rear Indicator/Hazard Lamp Command	-	Inactive	The scan tool displays Active or Inactive.
Right Rear Window Main Control Down Switch	-	Inactive	The scan tool displays Active or Inactive.
Right Rear Window Main Control Express Switch	-	Inactive	The scan tool displays Active or Inactive.

Right Rear Window Main Control Up Switch	-	Inactive	The scan tool displays Active or Inactive.
Right Rear Window Motor Mode	-	Local Switch Overridden	The scan tool displays Down, Express, Up, Inhibit, or Local Switch Overridden.
Right Rear Window Switch at Door	-	Inactive	The scan tool displays Active or Inactive.
Right Indicator Switch	-	Inactive	The scan tool displays Active or Inactive. This parameter displays the right indicator switch status.
Run Abort	-	Inactive	This parameter displays the remote start diagnostic status history or the last remote start diagnostic status history.
Run Relay Command	-	Active	The scan tool displays Active or Inactive.
Run/Crank	-	Inactive	The scan tool displays Active or Inactive.
Run/Crank Relay Command	-	Active	The scan tool displays Active or Inactive.
Run/Start Power Mode Indicator Command	-	Varies	The scan tool displays percentage. This parameter displays ignition switch run LED PWM command status.
Secondary Key Status	-	No	The scan tool displays No or Yes.
Security Indicator Command	-	Varies	The scan tool displays percentage. This parameter displays security LED PWM command status.
Selected Front Tyre Type	-	Standard Load	The scan tool displays No Tyre Type, Metric Standard Load, Metric Extra Load, Load Range C, Load Range D, or Load Range E. This parameter displays the front tyre type.
Selected Rear Tyre Type	-	Standard Load	The scan tool displays No Tyre Type, Metric Standard Load, Metric Extra Load, Load Range C, Load Range D, or Load Range E. This parameter displays the rear tyre type.
Start-Up State of Charge	-	Varies	The scan tool displays percentage. This parameter displays startup state of charge status.
State of Charge	-	Varies	The scan tool displays percentage. This parameter displays state of charge status.
Sunroof Enabled	-	Active	The scan tool displays Active or Inactive.
Sunroof Motor Overtemperature	-	Inactive	The scan tool displays Active or Inactive.
Sunroof Not Learned	-	Inactive	The scan tool displays Active or Inactive.
Sunroof Position	-	Closed	The scan tool displays Closed, Open, Venting, Comfort Open, Closing, Opening. This parameter displays the current sunroof position.

Sunroof Remote Command	-	Inactive	The scan tool displays Sunroof Secure Close, Venting, Close, or Open. This parameter displays the last sunroof remote command.
Sunroof Slide Switch	-	Inactive	The scan tool displays Inactive, Express Open, Open, Express Close, Close, Short to Ground, Short to Battery, or Stuck. This parameter displays the sunroof slide switch status.
Sunroof Slide Switch	-	Inactive	The scan tool displays Inactive, Open, Close, Short to Ground, Short to Battery or Stuck. This parameter displays the sunroof tilt switch status. When the switch experiences a malfunction Short to Ground, Short to Battery or Stuck will be displayed.
Sunroof/Sunshade Motor Overtemperature	-	Inactive	The scan tool displays Active or Inactive.
Sunroof / Sunshade Switch	-	Inactive	The scan tool displays Inactive, Express Open, Open, Express Close, Close, Short to Ground, Short to Battery, or Stuck. This parameter displays the sunroof or sunshade switch status.
Sunshade Enabled	-	Active	The scan tool displays Active or Inactive.
Sunshade Not Learned	-	Inactive	The scan tool displays Active or Inactive.
Sunshade Position	-	Closed	The scan tool displays Ajar, Closed, Opened, Closing, or Opening. This parameter displays the sunshade position status.
Sunshade Remote Command	-	Inactive	The scan tool displays Close or Open. This parameter displays the last sunshade remote command.
Tamper Status	-	No	The scan tool displays No or Yes.
Telematics Enhanced Service Override Active	-	No	The scan tool displays No or Yes. This parameter displays vehicle theft deterrent system status.
Total Keys Learned	-	Varies	This parameter displays the number of keys learned.
Traction Control Switch	-	Inactive	The scan tool displays Active or Inactive. This parameter displays Active when the traction control switch is active.
Transponder Authentication	-	Initialising	The scan tool displays Inactive, Initialising, ID Received, Password Received, Data Reception Complete, or Data Transmission Complete. This parameter displays the transponder key communication status.
Transponder Key Status	-	OK	The scan tool displays OK, LIN Bus Initialisation Malfunction, Aerial Initialisation Malfunction, Password Error, No Valid Key Detected, LIN Bus Communication Malfunction, or Aerial Malfunction. This parameter displays the transponder key communication error status.
Trunk Lamp Command	-	Varies	The scan tool displays as percentage.
Boot Lid/Tailgate Window Exterior Unlatch Switch	-	Inactive	The scan tool displays Active or Inactive.
Boot Lid/Tailgate Window Unlatch Command	-	Inactive	The scan tool displays Active or Inactive.

Valet Keys Learned	-	Varies	This parameter displays the number of valet keys learned.
Valet Mode Status	-	Inactive	This parameter displays the remote start diagnostic status history or the last remote start diagnostic status history.
Valet switch	-	Inactive	The scan tool displays Active or Inactive. This parameter displays Active when the valet switch is on.
Vehicle Identification Number (VIN)	-	Varies	This parameter displays the vehicle identification number.
Window Lockout Switch	-	Inactive	The scan tool displays Active or Inactive.
Window Lockout Switch Indicator Command	-	Inactive	The scan tool displays Active or Inactive.
Windscreen Washer Relay Command	-	Inactive	The scan tool displays Active or Inactive. This parameter displays the windscreen washer relay status.
Windscreen Washer Switch	-	Inactive	The scan tool displays Active or Inactive. This parameter displays the windscreen washer switch status.
Windscreen Wiper Park Switch	-	Active	The scan tool displays Active or Inactive.
Windscreen Wiper High Speed Relay Command	-	Inactive	The scan tool displays Active or Inactive.
Windscreen Wiper High Speed Switch	-	Inactive	The scan tool displays Active or Inactive.
Windscreen Wiper Motor Relay Command	-	Inactive	The scan tool displays Active or Inactive. This parameter displays the windscreen wiper relay status.
Windscreen Wiper Stalled During Sweep	-	Inactive	The scan tool displays Active or Inactive.
Windscreen Wiper Stalled in Park Position	-	Inactive	The scan tool displays Active or Inactive. This parameter displays the windscreen wiper stalled status.
Windscreen Wiper Switch	-	Off	The scan tool displays Off, Delay 1, Delay 2, Delay 3, Delay 4, Delay 5, or Low. This parameter displays the windscreen wiper switch status.

Body Control Module Scan Tool Output Controls

Scan Tool Output	

Control	Description
Accent Lighting 1 Command	The BCM activates the accent lighting when you select On. The value should be 100%. All accent lighting should illuminate until commanded Off.
Accessory Power Mode Indicator Command	The BCM activates the accessory indicator when you select On. The value should be 100%. The yellow LED accessory indicator on start button should illuminate until commanded Off.
Accessory/Retained Accessory Power Relay Command	The BCM actuates the retained accessory power relay when you select On. The retained accessory power relay should turn on allowing specific vehicle functions to operate.
All Doors Lock Command	The BCM activates all doors lock when you select Lock. All doors should lock.
Reversing Lamps Command	The BCM actuates the reverse lamps relay when you select On. The reverse lamps should illuminate until commanded Off. Engine must be running.
Battery Saver Relay	The BCM activates the battery saver relay when you select Enable. This command sets the low power mode relay in the state in which it does not supply power to the non-essential parts of the vehicle. This is used to prevent the battery from being depleted when the vehicle is not used for a long period of time.
Brake Pedal Position Sensor Learn	The BCM activates the brake pedal position sensor learn when you select Learn. The brake pedal position sensor learn procedure should start.
Centre Brake Lamp Command	The BCM activates the centre brake lamp when you select On. The centre brake lamp should illuminate until commanded Off.
Child Security Lock Motors Command	The BCM actuates the child security door motor when you select Lock. The child security doors should lock.
Clear Driver Window Learned Values	When you select Clear the clear driver window learn procedure should start.
Clear Passenger Window Learned Values	When you select Clear the clear left rear window learn procedure should start.
Courtesy Lamps Command	The BCM activates the courtesy lamps when you select On. The value should be 100%. The courtesy lamps should illuminate until commanded Off.
Driver Door Unlatch Command	The BCM activates the output circuit to unlatch the driver door with a passive entry passive start when you select Unlatch. There is NO door handle on this type of vehicle to open the door. Instead, there is a pad that you press to unlatch the door.
Driver Door Unlock Command	The BCM pulses the driver door unlock motor when you select Unlock. The driver door should unlock.
Driver Window Motor Mode	The BCM activates the driver window motor when you select Up/Down/Stop/Express Up/Express Down. The driver window should follow the appropriate command.
Front Fog Lamps Command	The BCM actuates the front fog lamps relay when you select On. The front fog lamps relay should turn on.
Hazard Lamps Switch Backlight Command	The BCM activates the hazard lamps switch when you select On. The value should be 100%. The hazard lamps switch backlight should illuminate until commanded Off.
Main Beams	The BCM activates the main beam command when you select On. The main beam lights should illuminate. The headlamps have to be on.

Horn Relay	The BCM activates the horn when you select On. The horn should sound.
Inadvertent Load Command	The BCM activates the inadvertent load command when you select On. (It is an electronic request to shut down an electrical or electronic device that is drawing power from the battery at a time when there should be no activity, usually after the key has been removed from the ignition for a period of time.)
LED Backlight Dimming Command	The BCM activates the LED backlight dimming when you select On. The values should be 100%. The LED backlight dimming for control switches should illuminate until commanded Off.
Left Brake Lamp Command	The BCM activates the left brake lamp when you select On. The values should be 100%. The left brake lamp should illuminate until commanded Off.
Left Dedicated Daytime Running Lamp Command	The BCM activates the left dedicated daytime running lamp when you select ON. The value changes to 100%. The left daytime running lamp should illuminate.
Left Front Indicator Lamp Command	The BCM activates the left front indicator lamp when you select On. The left front indicator lamp should illuminate until commanded Off.
Left Sidelights Command	The BCM activates the left sidelights when you select ON with a value of 100%. The left sidelights should illuminate.
Left Rear Indicator Lamp Command	The BCM activates the left rear indicator lamp when you select On. The left rear indicator lamp should illuminate until commanded Off.
Left Rear Window Motor	The BCM activates the left rear window motor when you select Up/Down/Stop/Express Down. The left rear window should follow the appropriate command.
Number Plate Lamps Command	The BCM activates the number plate lamps when you select On. The number plate lights should turn on until commanded Off.
LIN Bus Device Identification Data	When you select Update the LIN Bus Device part number and calibration part number should be updated.
Dipped Beam Relay Command	The BCM activates the dipped beams when you select On. The dipped beam lights should turn on.
Outside Rear View Mirror Courtesy Lamp Command	The BCM activates the outside rear view mirror courtesy lamp when you select On. The outside rear view mirror courtesy lamp (at the bottom) should illuminate.
Passenger Door(s) Unlatch Command	The BCM activates the output circuit to unlatch the passenger door with a passive entry passive start when you select Unlatch. There is NO door handle on this type of vehicle to open the door. Instead, there is a pad that you press to unlatch the door.
Passenger Door(s) Unlock Command	The BCM pulses the passenger door unlock motor when you select Unlock. The passenger door should unlock.
Passenger Window Motor	The BCM activates the passenger window motor when you select Up/Down/Stop/Express Up/Express Down. The passenger window should follow the appropriate command.
Right Brake Lamp Command	The BCM activates the right brake lamp when you select On. The value should be 100%. The right brake lamp should illuminate until commanded Off.
Right Dedicated Daytime Running Lamp Command	The BCM activates the right dedicated daytime running lamp when you select On. The value should be 100%. The right daytime running lamp should illuminate.
Right Front Indicator	The BCM activates the right front indicator lamp when you select On. The right front indicator/hazard lamp should illuminate.

Lamp Command	
Right Sidelights Command	The BCM activates the right sidelights when you select ON with a value of 100%. The right sidelights should illuminate.
Right Rear Indicator Lamp Command	The BCM activates the right rear indicator/hazard lamp when you select On. The right rear indicator lamp should illuminate until commanded Off.
Right Rear Window Motor	The BCM activates the right rear window motor when you select Up/Down/Stop/Express Down. The right rear window should follow the appropriate command.
Run Relay Command	The BCM actuates the run relay when you select On. The run relay should turn on.
Run/Crank Relay Command	The BCM actuates the run/crank relay when you select On. The run/crank relay should turn on.
Run/Start Power Mode Indicator Command	The BCM activates the run/start lamp when you select On. The value should be 100%. The green LED on engine start/stop button should illuminate until commanded Off.
Security Indicator Command	The BCM activates the security indicator command when you select On. The security indicator at centre of dash (or at DRL sensor) should illuminate until commanded Off.
Tyre Pressure Sensors Learn	The BCM activates the tyre pressure sensor learn procedure when you select Learn.
Tyre Type/Pressure Selection	When you select OK, you can change tyre type and load range.
Transmission Range Indicator	The BCM activates the transmission range indicator when you select On. The transmission range indicator at the shifter should illuminate until commanded Off.
Boot Lamp Command	The BCM activates the boot lamp when you select On. The value should be 100%. The boot lamp should illuminate until commanded Off.
Boot Lid/Tailgate Window Unlatch Command	The BCM actuates the rear compartment lid release actuator when you select Unlatch. The boot or tailgate should open.
Windscreen Washer Relay Command	The BCM actuates the windscreen washer relay when you select On. The windscreen washer relay should turn on.
Windscreen Wiper High Speed Relay Command	The BCM actuates the windscreen wiper high speed relay when you select On. The windscreen wiper high speed relay should turn on.
Windscreen Wiper Motor Relay Command	The BCM actuates the windscreen wiper motor relay when you select On. The windscreen wiper motor relay should turn on.

© Copyright Chevrolet. All rights reserved

Driver Seat and Passenger Seat Heater Control Module Scan Tool Information

Table 1: Front Seat Heating Control Module Scan Tool Data Parameters
Table 2: Front Seat Heating Control Module Scan Tool Output Controls

Front Seat Heating Control Module Scan Tool Data Parameters

Parameter	Expected Value	Description
Operating Conditions: Engine Running		
Driver Seat Cushion Heating Command	Inactive	The scan tool displays Inactive or Active. This parameter displays the commanded output from the seat heating control module to the seat heater elements.
Driver Seat Cushion Temperature Sensor	Varies	The scan tool displays 0 - 5 V. The voltage displayed is an input to the seat heating control module from the seat cushion temperature sensor. Higher voltage readings indicate cooler seat temperatures while lower voltage readings indicate warmer seat temperatures.
Driver Seat Heating/Venting/Cooling Level	Off	The scan tool displays Off, High Medium, or Low. When the heated seat is active, this parameter displays the selected temperature setting.
Driver Seat Heating/Venting/Cooling Mode	Off	The scan tool displays Off or Back & Cushion Heat. This parameter indicates the heated seat mode of operation.
Passenger Seat Cushion Heating Command	Inactive	The scan tool displays Inactive or Active. This parameter displays the commanded output from the seat heating control module to the seat heater elements.
Passenger Seat Cushion Temperature Sensor	Varies	The scan tool displays 0 - 5 V. The voltage displayed is an input to the seat heating control module from the seat cushion temperature sensor. Higher voltage readings indicate cooler seat temperatures while lower voltage readings indicate warmer seat temperatures.
Passenger Seat Heating/Venting/Cooling Level	Off	The scan tool displays Off, High, Medium, or Low. When the heated seat is active, this parameter displays the selected temperature setting.
Passenger Seat Heating/Venting/Cooling Mode	Off	The scan tool displays Off or Back & Cushion Heat. This parameter indicates the heated seat mode of operation.

Front Seat Heating Control Module Scan Tool Output Controls

Control Functions	Description
Operating Conditions: Engine Running	
Driver Seat Cushion Heating	This output control is used to command the driver seat heater elements On.
Passenger Seat Cushion Heating	This output control is used to command the passenger seat heater elements On.

© Copyright Chevrolet. All rights reserved

Electronic Brake Control Module Scan Tool Information

Table 1: Electronic Brake Control Module Scan Tool Data Parameters
Table 2: Electronic Brake Control Module Scan Tool Output Controls

The electronic brake control module (EBCM) scan tool data parameters list contains all ABS related parameters that are available on the scan tool. The list is arranged in alphabetical order. A given parameter may appear in any one of the data lists.

Electronic Brake Control Module Scan Tool Data Parameters

Parameter	System State	Expected Value	Description
Operating Conditions: Vehicle in Service Mode			
ABS Pump Motor Voltage	-	Varies	The scan tool displays the pump motor voltage.
Antilock Braking System	-	Inactive	The scan tool displays Inactive or Active. Active is displayed when the antilock braking system is in traction control event.
Antilock Braking System Status	-	No	The scan tool displays No or Yes. If there is an ABS malfunction the scan tool will display Yes.
Brake Controls Brake Pedal Position Sensor Circuit 1	-	Varies	This displays volts. This is the brake controls brake pedal position sensor circuit 1 reference value.
Brake Controls Brake Pedal Position Sensor Circuit 2	-	Varies	This displays percentage. This is the brake controls brake pedal position sensor circuit 2 that calculates the percentage of brake pedal applied or released.
Brake Controls Brake Pedal Position Sensor without Offset	-	Varies	This displays mm. This is the value used to compare the position of the primary piston sensors.
Brake Controls Brake Pedal Position Sen. 5 Volt Supply Voltage	-	Varies	This displays volts. This is the voltage supply to the brake controls brake pedal position sensor.
Brake Controls Brake Pedal Position	-	Varies	The scan tool displays the brake pedal counts. Learned or Not Learned. This is the brake controls brake pedal position sensor zeroed or learned value.
Brake Boost Power Status	-	Enabled	The scan tool displays Enabled or Disabled.
Brake Master Cylinder Pressure Sensor	-	Varies	This displays psi/kpa. This is the current brake applied pressure.
Brake Fluid Level Sensor	-	Varies	This displays volts. This is the voltage supply to the brake fluid level sensor signal.
	Brake pedal released	Released	

Brake Pedal Position Sensor Signal	Brake pedal applied	Applied	The scan tool displays Applied or Release depending on the state of the brake pedal.
Brake Pressure Sensor	Brake pedal released	0-1.55 V	The scan tool displays 0-5 V depending on the applied hydraulic brake pressure.
	Brake pedal applied	1.55-5 V	
Dynamic Rear Proportioning Status	-	No	The scan tool displays No or Yes. If the EBCM disables the dynamic rear proportioning due to a fault the scan tool will display Yes.
Engine Drag Control Status	-	No	The scan tool displays No or Yes. If the EBCM detects an ABS event, it sends a signal to the ECM to reduce engine power and Yes is displayed on the scan tool.
High Pressure Accumulator Sensor	-	Varies	This displays the pressure of the accumulator.
Ignition Voltage	-	Varies	This displays volts. This is the voltage status of the electronic brake control module (EBCM).
Left Front Inlet Solenoid Valve Command	-	Off	The scan tool displays Off or On. On is displayed when the left front inlet solenoid valve is commanded ON.
Left Front Outlet Solenoid Valve Command	-	Off	The scan tool displays Off or On. On is displayed when the left front outlet solenoid valve is commanded ON.
Left Front Wheel Speed Sensor	-	0 km/h (0 MPH)	The scan tool displays km/h (MPH) depending on the current speed of the left front wheel speed sensor.
Left Rear Inlet Solenoid Valve Command	-	Off	The scan tool displays Off or On. On is displayed when the left rear inlet solenoid valve is commanded ON.
Left Rear Outlet Solenoid Valve Command	-	Off	The scan tool displays Off or On. On is displayed when the left rear outlet solenoid valve is commanded ON.
Left Rear Wheel Speed Sensor	-	0 km/h (0 MPH)	The scan tool displays km/h (MPH) depending on the current speed of the left rear wheel speed sensor.
Panic Brake Assist Status	-	No	The scan tool displays No or Yes. If the EBCM disables the panic brake assist due to a fault the scan tool will display Yes.
Regenerative Braking Status	-	Active	The scan tool displays Active or Inactive.
Right Front Inlet Solenoid Valve Command	-	Off	The scan tool displays Off or On. On is displayed when the right front inlet solenoid valve is commanded ON.
Right Front Outlet Solenoid Valve Command	-	Off	The scan tool displays Off or On. On is displayed when the right front outlet solenoid valve is commanded ON.
Right Front Wheel Speed Sensor	-	0 km/h (0 MPH)	The scan tool displays km/h (MPH) depending on the current speed of the right front wheel speed sensor.
Right Rear Inlet Solenoid Valve Command	-	Off	The scan tool displays Off or On. On is displayed when the right rear inlet solenoid valve is commanded ON.
Right Rear Outlet Solenoid Valve Command	-	Off	The scan tool displays Off or On. On is displayed when the right rear outlet solenoid valve is commanded ON.
Right Rear Wheel Speed Sensor	-	0 km/h (0 MPH)	The scan tool displays km/h (MPH) depending on the current speed of the right rear wheel speed sensor.

Steering Wheel Angle Sensor Signal	Steering wheel in straight position	-5 to +5°	The scan tool displays °. This is the current position of the steering angle sensor.
	Steering wheel turned left until stop	450-550°	
	Steering wheel turned right until stop	-550 to -450°	
System Voltage	-	11-14 V	The scan tool displays V. This is the current battery voltage.
Traction Control System	-	No	The scan tool displays No or Yes. If there is a traction control malfunction the scan tool displays Yes.
Vehicle Stability System Status	-	No	The scan tool displays No or Yes. If there is a stability control malfunction the scan tool displays Yes.

Electronic Brake Control Module Scan Tool Output Controls

Output Control	Description
Automated Brake Bleed	This is used in order to bleed ABS hydraulics.
ABS Pump Motor	This is used in order to command the ABS pump motor On or Off.

© Copyright Chevrolet. All rights reserved

Electronic Parking Brake Control Module Scan Tool Information

Table 1: Parking Brake Control Module Scan Tool Data Parameters
Table 2: Parking Brake Control Module Scan Tool Output Controls

Parking Brake Control Module Scan Tool Data Parameters

Parameter	Expected Value	Description
Operating Conditions: Vehicle in Service Mode, Parking Brake Off		
Base Hardware	Varies	The scan tool displays the base hardware number.
BCM Brake Pedal Signal	Valid	The scan tool displays Valid or Invalid. This parameter displays the signal status received by the body control module brake pedal as valid or invalid. If the signal received is invalid the parking brake control module will deactivate.
Calculated System Temperature	Varies	The scan tool displays the parking brake control module temperature in degrees Celsius.
Calibrations	Varies	The scan tool displays the calibration number.
EBCM Emergency Park Brake Enable Signal	Valid	The scan tool displays Valid or Invalid. This parameter displays the signal status received by the electronic brake control module emergency park brake enable signal as valid or invalid. If the signal received is invalid the parking brake control module will deactivate.
ECM Accelerator Pedal Position Signal	Valid	The scan tool displays Valid or Invalid. This parameter displays the signal status received by the engine control module accelerator pedal position signal as valid or invalid. If the signal received is invalid the parking brake control module will deactivate.
ECM Clutch Pedal Position Signal	Valid	The scan tool displays Valid or Invalid. This parameter displays the signal status received by the engine control module clutch pedal position signal as valid or invalid. If the signal received is invalid the parking brake control module will deactivate.
ECM Vehicle Speed Signal	Valid	The scan tool displays Valid or Invalid. This parameter displays the signal status received by the engine control module vehicle speed signal as valid or invalid. If the signal received is invalid the parking brake control module will deactivate.
End Model	Varies	The scan tool displays the end model number.
OS/Software	Varies	The scan tool displays the software number.
Park Brake Calibration Status	Passed	The scan tool displays Passed or Failed. This parameter displays if the park brake calibration is properly programmed into the parking brake control module.
Park Brake Cable Position	1	The scan tool displays 1, 2, or 3. This parameter displays the system cycle value. When the park brake is released 1 will be displayed. When the park brake is applied 3 is displayed. When the park brake is being applied or released 2 is displayed.

Park Brake Motor Command	Off	The scan tool displays On or Off. This parameter displays the status of the park brake motor.
Park Brake Motor Direction	Inactive	The scan tool displays Apply, Release or Inactive. This parameter displays the status of the park brake motor direction.
Park Brake Motor Duty Cycle Command	Varies	The scan tool displays the pulse width modulated cycle as a percentage.
Park Brake Release Reason	None	The scan tool displays None, Ign. Cycled, Spd. Threshold, or Brake Applied. This parameter displays the reason the parking brake was released.
Park Brake Status	Released	The scan tool displays Applied, Released, Malfunction or Invalid. This parameter displays the current status of the parking brake.
Park Brake Switch	Inactive	The scan tool displays Applied, Released, Inactive, or Invalid. This parameter displays the current status of the parking brake switch.
TCM Current Gear Signal	Valid	The scan tool displays Valid or Invalid. This parameter displays the signal status received by the transmission control module current gear signal as valid or invalid. If the signal received is invalid the parking brake control module will deactivate.
VIN	Varies	The scan tool displays the vehicle identification number.

Parking Brake Control Module Scan Tool Output Controls

Output Control	Description
Handbrake Shoe Service Reset	The electric handbrake module will reset the dynamic brake counter. When selected the EPB counter will be set to zero.
Parking Brake Calibration	The electric handbrake module will activate the handbrake calibration learn procedure when selected. During the learn procedure the rear brakes will cycle several times.
Parking Brake Cable Apply	The electric handbrake module will apply the handbrake cable tension to diagnose a possible EPB switch failure.
Parking Brake Cable Release	The electric handbrake module will release the handbrake cable to diagnose a possible EPB switch failure.
Handbrake Cable Replacement	The electric handbrake module will unwind the handbrake cable for replacement or service when selected.
Parking Brake Actuator DTC Reset	The electric handbrake module will reset the handbrake actuator when commanded.
Handbrake Switch Procedure	The electric handbrake module will test the handbrake switch signals to verify they are working properly or if there is an open circuit.

© Copyright Chevrolet. All rights reserved

Engine Control Module Scan Tool Information

Table 1: Engine Control Module Scan Tool Data Parameters
Table 2: Engine Control Module (ECM) Scan Tool Output Controls

The engine control module scan tool data list contains all engine related parameters that are available on the scan tool. The list is arranged in alphabetical order. A given parameter may appear in any one of the data lists, and in some cases may appear more than once, or in more than one data list in order to group certain related parameters together.

Use the engine scan tool data list only after the following is determined:

- The Diagnostic System Check - Vehicle is completed.
- No diagnostic trouble codes (DTCs)
- On-board diagnostics are functioning properly

The scan tool values from a properly running engine may be used for comparison with the engine you are diagnosing. The engine scan tool data list represents values that may be seen on a normally running engine.

Note: A scan tool that displays faulty data should not be used. The scan tool concern should be reported to the manufacturer. Use of a faulty scan tool can result in misdiagnosis and unnecessary parts replacement.

Only the parameters listed below are referenced in this service manual for use in diagnosis. If all values are within the typical range described below, refer to Symptoms - Engine Controls for engine diagnosis.

Engine Control Module Scan Tool Data Parameters

Parameter	System State	Expected Value	Description
Operating Conditions: Engine Idling/Radiator Hose Hot/Closed Throttle/Park or Neutral/Closed Loop/Accessories Off/Brake Pedal Released			
5 V Reference 1, 2, 3, or 4	Vehicle ON	5 V	This parameter displays the voltage sensed on the 5 V reference circuits at the control module. The scan tool will display a higher value at higher voltage. The scan tool will display a lower value at lower voltage.
5 V Reference 1, 2, 3, or 4 Circuit Status	Vehicle ON	OK	This parameter displays OK if there is no 5 V reference circuit condition. If the circuit is shorted to ground or shorted to B+, Malfunction is displayed.
	Accelerator		

Accelerator Pedal Position	pedal not actuated	0 %	This parameter displays the angle of the APP as calculated by the control module using the signals from the APP sensors.
	Accelerator pedal fully actuated	100 %	
Accelerator Pedal Position	-	%	This parameter displays the angle of the accelerator pedal position (APP) as calculated by the control module using the signals from the APP sensors.
Accelerator Pedal Position When Engine Overspeed Detected	-	%	This parameter displays the accelerator pedal position (APP) observed upon initial detection of an overspeed condition. This value will be updated upon each overspeed condition.
A/C Compressor Clutch Relay Command	A/C ON	ON	This parameter displays the state of the air conditioning (A/C) clutch relay control circuit as commanded by the control module.
A/C Compressor Clutch Relay Control Circuit High Voltage Test Status	A/C ON or OFF	OK/Not Run	This parameter displays the state of the air conditioning (A/C) clutch relay control circuit. The scan tool displays OK, Malfunction, or Not Run. OK indicates that no circuit faults are detected during the current test.
A/C Compressor Clutch Relay Control Circuit Low Voltage Test Status	A/C ON or OFF	OK/Not Run	This parameter displays the state of the air conditioning (A/C) clutch relay control circuit. The scan tool displays OK, Malfunction, or Not Run. OK indicates that no circuit faults are detected during the current test.
A/C Compressor Clutch Relay Control Circuit Open Test Status	A/C ON or OFF	OK/Not Run	This parameter displays the state of the air conditioning (A/C) clutch relay control circuit. The scan tool displays OK, Malfunction, or Not Run. OK indicates that no circuit faults are detected during the current test.
A/C Disable - A/C Pressure Out of Range	A/C ON	No	This parameter displays whether the A/C pressure is out of range for normal operation as determined by the control module.
A/C Disengage 1-8 History	A/C ON	Reason for A/C Disengagement	The parameter displays the reason the air conditioning (A/C) compressor was disengaged. The scan tool displays None, A/C Pressure, Engine Speed, Battery Voltage, Anti Stall, RPM Unstable, wide open throttle (WOT), Launch Performance, Coolant Hot, Accelerator Pedal Position (APP), Air Bag Deploy, or A/C Relay DTC.
A/C High Side Pressure Sensor	A/C OFF	0.75-1.5 V*	This parameter displays the voltage from the A/C high side pressure sensor signal circuit to the control module. *Varies with temperature and relative humidity.
	A/C ON	1.3-2.5 V*	
A/C High Side Pressure Sensor	A/C OFF	450-650 kPa* (65-95 (PSI)*	This parameter displays the pressure from the A/C high side pressure sensor signal circuit to the control module. *Varies with temperature and relative humidity.
	Engine Speed at 2 000 RPM	900-2 350 kPa* (162-341 PSI)*	
A/C OFF for WOT	A/C ON	No	This parameter displays whether the control module is commanding the A/C compressor clutch relay OFF for WOT.
A/C Request Signal	A/C ON	Yes	This parameter displays the state of the A/C request input to the control module from the heating,

			ventilation, and air conditioning (HVAC) controls.
A/C System Refrigerant Monitor Enabled This Ignition Cycle	-	Yes	The scan tool displays Yes when the A/C System Refrigerant Monitor is Enabled. If the scan tool displays No this could indicate a malfunction in the A/C System Refrigerant Monitor circuit. The A/C system must be turned ON for the diagnostic to run.
Air/Fuel Equivalence Ratio Command	-	Varies	This parameter displays the ratio of air to fuel as calculated by the control module based on various sensor inputs. The scan tool will display a lower air fuel ratio when a richer air to fuel mixture is commanded. The scan tool will display a higher air fuel ratio when a leaner air to fuel mixture is commanded. In closed loop operation the air fuel ratio should normally be approximately 14.7:1.
Ambient Air Temperature	-	°C (°F) Varies	This parameter displays the surrounding air temperature, at any given altitude.
APP Sensor 1	Accelerator pedal not actuated	0.88-1.08 V	This parameter displays the actual voltage on the accelerator pedal position (APP) Sensor 1 signal circuit as measured by the control module.
	Accelerator pedal fully actuated	4.17-4.37 V	
APP Sensor 1 and 2	-	Agree	This parameter displays the results of a control module test that compares the signals from the APP sensors 1 and 2. The scan tool will display Agree or Disagree. Agree indicates that APP sensor 1 and APP sensor 2 voltages correspond to the same accelerator pedal position. Disagree indicates that APP sensor 1 and APP sensor 2 voltages correspond to different accelerator pedal positions.
APP Sensor 1 Circuit Status	Vehicle ON	OK	APP Sensor 1 Out of Range indicates that the sensed accelerator pedal position 1 sensor value is currently out of range or that a Malfunction has been detected based upon the sensed accelerator pedal position 1 sensor value being out of range.
APP Sensor 1 Position	Accelerator pedal not actuated	0 %	This parameter displays the angle of the APP sensor 1 as calculated by the control module using the signal from the APP sensor 1. APP sensor 1 is a range of values indicating a low percentage when the accelerator pedal is not depressed to a high percentage when the accelerator pedal is fully depressed.
	Accelerator pedal fully actuated	100 %	
APP Sensor 2	Accelerator pedal not actuated	0.39-0.59 V	This parameter displays the actual voltage on the accelerator pedal position (APP) Sensor 2 signal circuit as measured by the control module.
	Accelerator pedal fully actuated	2.02-2.22 V	
APP Sensor 2 Circuit Status	Vehicle ON	OK	APP Sensor 2 Out of Range indicates that the sensed accelerator pedal position 2 sensor value is currently out of range or that a Malfunction has been detected based upon the sensed accelerator pedal position 1 sensor value being out of range.

APP Sensor 2 Position	Accelerator pedal not actuated	0 %	This parameter displays the angle of the APP sensor 2 as calculated by the control module using the signal from the APP sensor 2. APP sensor 2 is a range of values indicating a low percentage when the accelerator pedal is not depressed to a high percentage when the accelerator pedal is fully depressed.
	Accelerator pedal fully actuated	100 %	
APP Sensors	-	0 %	This parameter displays the average of the APP sensors as calculated by the throttle actuator control (TAC) module. The APP average is a range of values indicating a low percentage when the accelerator pedal is not depressed to a high percentage when the accelerator pedal is fully depressed.
Autostart Inhibit Reason Autostart/Autostop Malfunction	-	No	This parameter displays that a immediate stop was commanded due to a Autostart/Autostop malfunction.
Autostart Inhibit Reason	-	No	The scan tool displays Yes if one of the following Autostart Inhibit Reason is detected. Control Function Active, Crank Abort, ECM Malfunction, ECM Request, Bonnet Ajar, Hybrid/EV Battery Pack Contactor Open, Hybrid/EV Battery Pack Power Low, Hybrid/EV Battery Pack State of Charge Low, Hybrid/EV Battery Pack Voltage Low, Hybrid/EV Propulsion System Inactive, Not Commanded, Run/Crank Not Active, Transmission Range.
Autostart Reason	-	No	This parameter displays Yes if one of the following Autostart Reason is detected. A/C Request, Acceleration Request, Accelerator Pedal Pressed, Auxiliary Transmission Fluid Pump Not Available, Brake Booster Weak Vacuum, Brake Pedal Released, Control Function Active, Drive Motor Inverter Temperature High, Drive Motor Temperature High, ECM Request, Engine Coolant Temperature Out of Range, Bonnet Ajar, Hybrid/EV Battery Module Voltage Low, Hybrid/EV Battery Pack Power Low, Hybrid/EV Battery Pack State of Charge Low, Hybrid/EV Battery Pack Temperature, Hybrid/EV Battery Pack Voltage Low, Hybrid/EV Propulsion System Inactive, Ignition Switch Start, Inclination, Invalid Data Received, Low Voltage Battery Discharge Current High, Low Voltage Battery State of Function Low, Low Voltage Battery State of Health Low, Low Voltage Battery Voltage Low, Maximum Autostop Time Exceeded, Minimum Engine Run Time Not met, Reduced Engine Power Active, Remote Vehicle Start Request, System Optimization, System Voltage Low, TCM Demand, Tow/Haul Mode Switch ON, Transmission Fluid Temperature Out of Range, Transmission In Reverse, Transmission Range, Vehicle Speed Too High.
Autostop Disable Reason	-	No	The scan tool displays Yes if one of the following Autostop Disable Reason is detected. 12 V Start Counter Exceeded, A/C Request, Acceleration Request, Accelerator Pedal Pressed, Auxilliary Transmission Fluid Pump Not Available, Brake Booster Weak Vacuum, Brake Pedal Released, Control Function Active, Drive Motor Inverter Temperature High, Drive Motor Temperature High, ECM Request, Engine Coolant Temperature Out of range, Engine Spped High, Generator Load High, Bonnet Ajar, Hybrid/EV Battery Module Voltage Low, Hybrid/EV Battery Pack Power Low, Hybrid/EV Battery Pack State of Charge Low, Hybrid/EV Battery Pack Temperature, Hybrid/EV Battery Pack Voltage Low, Hybrid/EV Propulsion System Inactive, Idle Boost Mode Active, Igntion Switch Start, Intake Manifold Weak Vacuum, Invalid Data Received, Low Voltage Battery Discharge Current High, Low Voltage Battery State of Charge Low, Low Voltage Battery State of Function Low, Low Voltage Battery State of

			Health Low, Low Voltage Battery Temperature Out of Range, Low Voltage Battery Voltage Low, Maximum Vehicle Stop Time Exceeded, Minimum Engine Run Time Not Met, Reduced Engine Power Active, Remote Vehicle Start Request, Run/Crank Not Active, Stop/Start Select Switch, System Optimization, System Voltage Low, TCM Request, Tow/Haul Mode Switch ON, Transmission Fluid Temperature Out of Range, Transmission in Reverse, Transmission Range, Vehicle Inclination, Vehicle Speed Threshold Not Reached, Vehicle Speed Too High, Wheel Slip Detected.
Average Fuel Age	-	Days	This parameter displays the average age of the fuel in the vehicle's fuel tank.
Axle Torque Command	-	N·m	This parameter displays the torque request for the slow response air path (control of the throttle). Based on current conditions the hybrid controller determines the optimum engine torque, which it sends as a request to the Engine Control Module.
BARO	-	65-104 kPa (8-16 PSI) - Varies with altitude	This parameter displays the barometric pressure (BARO). The control module uses the barometric pressure sensor input for fuel control to compensate for altitude differences.
Brake Pedal Position Signal	-	Released	This parameter displays the serial data message of the brake position sensor signal from the electronic brake and traction control module.
Calculated Air Flow	-	g/s Varies	This parameter displays the air flow of the engine as calculated by the control module.
Calculated Catalyst Temperature	-	°C (°F) Varies	This parameter displays the catalyst converter temperature as calculated by the engine control module.
Calculated Engine Oil Temperature	-	°C (°F) Varies	This parameter displays the temperature of the engine oil as calculated by the control module using various sensor inputs. The engine oil temperature calculated has a range of values indicating a low value when the oil temperature is low to a high value when the oil temperature is high.
Calculated Time Until Next Engine Maintenance Mode	-	Days	This parameter displays the estimated time remaining until the next engine maintenance mode is required.
Calculated Time Until Next Fuel Maintenance Mode	-	Days	This parameter displays the estimated time remaining until the next fuel maintenance mode is required.
Camshaft Position	-	Varies	This parameter displays the position of the intake camshaft in terms of degrees of camshaft rotation (advance) from the park position (a value of zero represents the park position).
Camshaft Position Active Counter	-	0-255 Counts	This parameter displays an incrementing counter when the control module receives a signal from the camshaft position sensors.
Camshaft Position Command	-	%	This parameter displays the commanded duty cycle for the intake cam phase output.
Camshaft Position Sensor	-	Engine Speed	This parameter displays the speed of the engine as calculated by the signal from the camshaft position sensor, shown in RPM.
Catalyst Monitor Complete This Ignition Cycle	-	Yes/No	This parameter displays the monitor completion status during the current driving/monitoring cycle.
Catalyst Monitor Enabled This Ignition Cycle	-	Yes/No	This parameter displays the monitor enable status during the current driving/monitoring cycle.
			This parameter displays the status of the catalyst monitor diagnostic. Off Idle Conditions Met indicates if

Catalyst Monitor Not At Idle Test Conditions Met	-	Yes/No	the off idle conditions for the catalyst monitor diagnostic have been met. Once the Off Idle Conditions are met the vehicle can return to idle and allow the catalyst monitor diagnostic test to run.
Catalyst Monitor Test Counter	-	0 Counts	This parameter displays the number of iterations of the catalyst monitor diagnostic test that have been performed since a code clear (used to determine if a sufficient number of tests have run to report a passing condition).
Catalyst Monitor Test Result	-	Varies	This parameter displays the status of the catalyst monitor diagnostic.
Catalyst Monitor Test State	-	Varies	This parameter displays when the catalyst monitor diagnostic is actively running a test. This condition will only be true when the vehicle is at idle.
Charging Mode	-	Depleting or Continuous	This parameter displays the currently active charging mode for an extended range electric vehicle.
Cold Start Up	-	Varies	This parameter displays whether the engine meets the conditions for a cold startup during the present ignition cycle. The scan tool displays Yes when the conditions for a cold startup are met during this ignition cycle. The scan tool displays No when the conditions for a cold startup are not met during the present ignition cycle. Conditions for a cold startup require the coolant temperature and the intake air temperature to be below a predetermined temperature and within a certain range of each other. These conditions must occur after the engine was warmed up to a specific temperature during the previous ignition cycle.
Cooling Fan Control Circuit High Voltage Test Status	-	Not Run	This parameter displays the diagnostic state of the output driver for the cooling fan relay control circuit. The scan tool will display OK, Malfunction or Not Run. The scan tool will display OK if the circuit is operating correctly.
Cooling Fan Control Circuit Low Voltage Test Status	-	Not Run	This parameter displays the diagnostic state of the output driver for the cooling fan relay control circuit. The scan tool will display OK, Malfunction or Not Run. The scan tool will display OK if the circuit is operating correctly.
Cooling Fan Control Circuit Open Test Status	-	Not Run	This parameter displays the diagnostic state of the output driver for the cooling fan relay control circuit. The scan tool will display OK, Malfunction or Not Run. The scan tool will display OK if the circuit is operating correctly.
Cooling Fan Motor Command	-	%	This parameter displays the amount of cooling commanded by the ECM in a percentage.
Crank Request Signal	-	No	This parameter displays Yes or No when a Crank Request Input Request is received.
Crankshaft Position Active Counter	-	0-255 Counts	This parameter displays an incrementing counter when the control module receives a signal from the crankshaft position sensor.
Crankshaft Position Resynchronisation Counter	-	0 Counts	This parameter displays the number of counts the control module resynchronises with the crankshaft position sensor.
Crankshaft Position Sensor	-	Engine Speed	This parameter displays the engine speed as calculated by the control module using the signal from the crankshaft position sensor.
Cruise Control	Cruise Control ON	Enabled/Disabled	This parameter displays the status of the cruise control system as determined by the control module.

Cruise Control Accelerate Switch	Cruise Control ON	Active/Inactive/Invalid	The scan tool displays ON, when the cruise ON/OFF switch is ON and the accelerate switch is pressed, the ECM detects a predetermined voltage value for this switch.
Cruise Control Cancel Switch	Cruise Control ON	Active/Inactive/Invalid	This parameter displays the status of the cruise control cancel switch.
Cruise Control Coast Switch	Cruise Control ON	Active/Inactive/Invalid	The scan tool displays ON, when the cruise ON/OFF switch is ON and the ECM detects a predetermined voltage value for the coast switch.
Cruise Control Disengage History 1-8	Cruise Control ON	Reason for Cruise Disengagement	The parameter displays the last 8 cruise control disengages in order from 1-8, with 8 being the most recent. There are approximately 40 possible causes for the cruise control to disengage.
Cruise Control Inhibit Reason	Cruise Control ON	Varies	The parameter displays the reason why the cruise control system is inhibited. There are approximately 40 possible causes for the cruise control to be inhibited.
Cruise Control ON/OFF Switch	Cruise Control ON	ON/OFF	The engine control module (ECM) monitors the signal circuit of the cruise control switch. A closed switch is displayed as ON.
Cruise Control Release Switch	Cruise Control ON	Active/Inactive/Invalid	The scan tool displays ON, when the cruise ON/OFF switch is ON and the resume switch is pressed, the ECM detects a predetermined voltage value for the resume switch.
Cruise Control Set Switch	Cruise Control ON	Active/Inactive/Invalid	The scan tool displays ON, when the cruise ON/OFF switch is ON and the ECM detects a predetermined voltage value for the set switch.
Current Gear	--	1	This parameter displays the current forward gear of the transmission
Current Gear When Engine Overspeed Detected	-	Varies	This parameter displays the transmission actual gear observed upon initial detection of an overspeed condition.
Cylinder 1-4 Current Misfire Counter	-	0 Counts	The scan tool displays 0-255 Counts. This parameter displays the number of misfires that have been detected during the last 200 cylinder firing events. The counters may normally display some activity, but the activity should be nearly equal for all of the cylinders, and in low numbers.
Cylinder 1-4 History Misfire Counter	-	0 Counts	The scan tool displays 0-255 Counts. The misfire history counters display the total level of misfire that has been detected on each cylinder. The misfire history counters will not update or show any activity until a misfire DTC P0300 has become active. The misfire history counters will update every 200 cylinder firing events.
Cylinder 1-4 Injector Control Circuit High Voltage Test Status	-	OK	This parameter displays the state of the injector control circuit. The scan tool displays OK, Malfunction, or Not Run. OK indicates that no circuit faults are detected during the current test.
Cylinder 1-4 Injector Control Circuit Low Voltage Test Status	-	OK	This parameter displays the state of the injector control circuit. The scan tool displays OK, Malfunction, or Not Run. OK indicates that no circuit faults are detected during the current test.
Cylinder 1-4 Injector Control Circuit Open Test Status	-	OK	This parameter displays the state of the injector control circuit. The scan tool displays OK, Malfunction, or Not Run. OK indicates that no circuit faults are detected during the current test.
Cylinder 1-4 Injector Disabled - Misfire	-	No	This parameter displays the status of the fuel injector driver by the control module. The scan tool will display Yes if the fuel injector is being disabled due to a misfire detection. The scan tool will display No if

Detected			the fuel injector is not being disabled by the control module due to a misfire.
Cylinder 1-4 Knock Detected	-	No	This parameter displays the status of each cylinder for knock detection by the control module. The scan tool will display Yes if a knock condition has been detected related to that cylinder combustion event. The scan tool will display No if there is no knock condition detected related to that cylinder combustion event.
Deceleration Fuel Cut-Off	-	Inactive	This parameter displays the status of the operating mode used to turn off the fuel injectors during certain deceleration conditions. When the scan tool displays Active, the control module has turned off the fuel injectors. When the scan tool displays Inactive, the fuel system is operating normally.
Desired ECT	-	°C (°F) Varies	This parameter displays the desired engine coolant temperature (ECT) in °C (°F).
Desired Exhaust Camshaft Position	-	Varies	This parameter displays the desired exhaust camshaft angle as commanded by the engine control module.
Desired Intake Camshaft Position	-	Varies	This parameter displays the desired intake camshaft angle as commanded by the engine control module.
Desired Intake Manifold Runner Control Valve Position	-	Opened or Closed	This parameter displays the commanded state of the Intake Manifold Runner Control output as Opened or Closed.
Desired Throttle Position	-	2-6 %	This parameter displays the desired throttle position angle commanded by the control module.
Distance Since DTC Cleared	-	Varies	This parameter displays the distance accumulated since an emission diagnostic trouble code was cleared. The scan tool will display increasing distance as the vehicle is driven.
Distance Since First Malfunction	Vehicle ON	0 km/h (0 MPH)	This parameter displays in kilometres or miles the distance travelled since a Malfunction occurred.
Distance Since Last Malfunction	-	Varies	This parameter displays the distance accumulated when the emission diagnostic trouble code last failed.
Distance Since Last Oil Pressure Warning	Vehicle ON	0 km/h (0 MPH)	This parameter displays in kilometres or miles the distance travelled since the last oil pressure warning Malfunction occurred.
Drive Motor No Crank At Restart	-	No	Starting System indicates that a condition in the starting system has been detected that would prevent a re-start of the vehicle, and thus Autostops have been disabled.
Driver Requested Axle Torque	-	Varies	This parameter displays the drivers requested axle torque as determined by the ECM. The ECM monitors accelerator pedal position and determines how much axle torque is required in order to meet the drivers request. The parameter display range is -8192 to +8191.75 N·m.
Driver Selected Autostart/Autostop Disable Mode Active	-	No	This parameter displays if the Driver Selected Autostart/Autostop Disable Mode is active.
Driver Selected Autostart/Autostop Disable Mode Available	-	Yes	This parameter displays if the Driver Selected Autostart/Autostop Disable Mode is available.
Driver Selected Economy			

Mode Active	-	No	This parameter displays if the Driver Selected Economy Mode is active.
Driver Selected Economy Mode Available	-	Yes	This parameter displays if the Driver Selected Economy Mode is available.
Driver Selected Hold Mode Active	-	No	This parameter displays if the Driver Selected Hold Mode is active.
Driver Selected Hold Mode Available	-	Yes	This parameter displays if the Driver Selected Hold Mode is available.
Driver Selected Mountain Mode Active	-	No	This parameter displays if the Driver Selected Mountain Mode is active.
Driver Selected Mountain Mode Available	-	Yes	This parameter displays if the Driver Selected Mountain Mode is available.
Driver Selected Sport Mode Active	-	No	This parameter displays if the Driver Selected Sport Mode is active.
Driver Selected Sport Mode Available	-	No	This parameter displays if the Driver Selected Sport Mode is available.
DTC Present	-	No	This parameter displays that a Diagnostic Trouble Code (DTC) has been set that prevents Autostops.
ECM Authentication Status	Vehicle ON	Unknown/Incorrect/Negative Response/Valid	ECM Authentication Status indicates the result of the comparison between the last received immobiliser response and the expected response calculated into the ECM.
ECM Challenge Status	-	Valid	This parameter displays the immobiliser system status of the ECM challenge. This indicates whether the currently calculated ECM challenge is valid.
ECM Response Source	Vehicle ON	Ignition Switch Start/Remote Vehicle Start/Exterior Power Take Off (PTO) Vehicle Start	ECM Response Source indicates the source used to calculate the ECM response.
ECT Sensor	-	-39 to +140°C (-38 to +284°F) Varies	This parameter displays the temperature of the engine coolant based on input to the control module from the engine coolant temperature (ECT) sensor.
ECT vs. IAT Sensor Temperature at Last ECT vs. RCT Malfunction Detection	-	Agree	The ECT/RCT rationality diagnostic will compare the two values during a cold start to determine if one of the sensors is reading incorrectly. If the two coolant sensor values disagree, the sensor values will then be compared to the Intake Air Temperature (IAT) sensor value.
EGR/Camshaft Position Monitor Complete	-	Yes/No	This parameter displays the status of the EGR/Camshaft Position Monitor. The parameter will display Yes when the EGR/Camshaft Position Monitor is complete.
EGR/Camshaft Position Monitor Complete This Ignition Cycle	-	Yes/No	This parameter displays the status of the EGR/Camshaft Position Monitor for this Ignition Cycle. The parameter will display Yes when the EGR/Camshaft Position Monitor is complete this Ignition Cycle.

EGR/Camshaft Position Monitor Enabled	-	Yes/No	This parameter displays the status of the EGR/Camshaft Position Monitor. The parameter will display Yes when the EGR/Camshaft Position Monitor is Enabled.
EGR/Camshaft Position Monitor Enabled This Ignition Cycle	-	Yes/No	This parameter displays the status of the EGR/Camshaft Position Monitor for this Ignition Cycle. The parameter will display Yes when the EGR/Camshaft Position Monitor is Enabled this Ignition Cycle.
Engine Controls Ignition Relay Command	-	ON	This parameter displays the commanded state of the engine control ignition relay control circuit. The scan tool will display ON or OFF. ON indicates the engine control ignition relay control circuit is being grounded by the control module, allowing voltage to other control module circuits and systems. OFF indicates the engine control ignition relay is not being commanded ON by the control module.
Engine Controls Ignition Relay Control Circuit High Voltage Test Status	-	Not Run	This parameter displays the state of the engine control ignition relay control circuit. The scan tool displays OK, Malfunction, or Not Run. OK indicates that no circuit Malfunctions are detected during the current test.
Engine Controls Ignition Relay Control Circuit Low Voltage Test Status	-	OK	This parameter displays the state of the engine control ignition relay control circuit. The scan tool displays OK, Malfunction, or Not Run. OK indicates that no circuit Malfunctions are detected during the current test.
Engine Controls Ignition Relay Control Circuit Open Test Status	-	Not Run	This parameter displays the state of the engine control ignition relay control circuit. The scan tool displays OK, Malfunction, or Not Run. OK indicates that no circuit Malfunctions are detected during the current test.
Engine Controls Ignition Relay Feedback Signal	-	B+	This parameter displays the voltage available at the engine control ignition relay circuit of the control module.
Engine Coolant Thermostat Heater Command	-	%	This parameter displays the commanded duty cycle for the engine coolant thermostat.
Engine Coolant Thermostat Heater Control Circuit High Voltage Test Status	-	OK	This parameter displays the state of the Engine Coolant Thermostat Heater control circuit. The parameter displays Malfunction if the Engine Coolant Thermostat Heater control circuit is shorted to voltage.
Engine Coolant Thermostat Heater Control Circuit Low Voltage Test Status	-	OK	This parameter displays the state of the Engine Coolant Thermostat Heater control circuit. The parameter displays Malfunction if the Engine Coolant Thermostat Heater control circuit is shorted to ground.
Engine Coolant Thermostat Heater Control Circuit Open Test Status	-	OK	This parameter displays the state of the Engine Coolant Thermostat Heater control circuit. The parameter displays Malfunction if the Engine Coolant Thermostat Heater control circuit is open.
Engine Load	Engine Idling	11-30 % Varies	This parameter displays the calculated engine load in percent based on inputs to the control module from various engine sensors.
	Engine speed at	25-40 %	

	2 500 RPM		
Engine Maintenance Mode	-	Active/Inactive	This parameter displays that an Engine Maintenance Mode is currently active or inactive.
Engine Maintenance Mode Completed This Ignition Cycle	-	True/False	This parameter displays that an Engine Maintenance Mode has run to completion during the current ignition cycle.
Engine Maintenance Mode Completion Status	-	%	This parameter displays a percent complete of a currently running engine maintenance mode. Once 100 % is reached, the Engine Maintenance Mode has completed this Ignition Cycle.
Engine Maintenance Mode Counter	-	Varies	This parameter displays the accumulated number of engine maintenance mode events over the life of the engine control module.
Engine OFF Time	Ignition Switch in the OFF Position	Varies	This parameter displays the amount of time that has elapsed since the engine was last cycled OFF. The scan tool displays the time in hours, minutes, and seconds. The engine OFF time will reset to zero when the engine starts.
Engine Oil Pressure Switch	-	OK	This parameter displays the state of the engine oil pressure as determined by the control module. The control module monitors the engine oil pressure switch to determine if the engine oil pressure is sufficient. The scan tool displays Low when the engine oil pressure is below a predetermined value.
Engine Oil Temperature When Engine Overspeed Detected	-	Varies	This parameter displays the engine oil temperature observed upon initial detection of an overspeed condition. This value will be updated after each overspeed condition.
Engine Run Time	Engine Operating	Varies	This parameter displays the time elapsed since the engine was started. The scan tool will display the time in hours, minutes and seconds. The engine run time will reset to zero when the engine stops running.
Engine Speed	Engine Cranking	Greater than 60 RPM	This parameter displays the speed of the engine crankshaft rotation from information received from the crankshaft position sensor.
	Engine Idling	Approximately 650-950 RPM	
Engine Speed When Engine Overspeed Detected	-	RPM	This parameter displays the engine speed observed upon initial detection of an overspeed condition. This value will be updated after each overspeed condition.
EVAP Leak Detection Pump Command	-	OFF	This parameter displays the commanded state of the EVAP Leak Check Pump vacuum pump output
EVAP Leak Detection Pump Output Circuit Open Test Status	-	OK	This parameter displays the state of the EVAP Leak Detection Pump Output circuit. The parameter displays Malfunction if the EVAP Leak Detection Pump Output circuit is opened.
EVAP Leak Detection Pump Pressure	-	kPa	This parameter displays EVAP Leak Detection Pump absolute pressure measured by a sensor.
EVAP Leak Detection Pump Pressure	-	Volts	This parameter displays the EVAP Leak Check Pump (ELCP) pressure value input to the control module as a voltage.

EVAP Leak Detection Pump Service Bay Test Abort Reason	-	Varies	This parameter displays the EVAP Leak Detection Pump Service Bay Test Abort Reason.
EVAP Leak Detection Pump Service Bay Test Denial Reason	-	Varies	This parameter displays the reason the EVAP service bay test was denied.
EVAP Leak Detection Pump Service Bay Test Result	-	Varies	This parameter displays the result of the EVAP service bay test.
EVAP Leak Detection Pump Switching Valve Command	-	Not Venting/ Venting	This parameter displays the commanded state of the EVAP Leak Check Pump switching valve output.
EVAP Leak Detection Pump Switching Valve Output Circuit High Voltage Test Status	-	OK	This parameter displays the state of the EVAP Leak Detection Pump Switching Valve Output circuit. The parameter displays Malfunction if the EVAP Leak Detection Pump Switching Valve Output circuit is shorted to voltage.
EVAP Leak Detection Pump Switching Valve Output Circuit Low Voltage Test Status	-	OK	This parameter displays the state of the EVAP Leak Detection Pump Switching Valve Output circuit. The parameter displays Malfunction if the EVAP Leak Detection Pump Switching Valve Output circuit is shorted to ground.
EVAP Leak Detection Pump Switching Valve Output Circuit Open Test Status	-	OK	This parameter displays the state of the EVAP Leak Detection Pump Switching Valve Output circuit. The parameter displays Malfunction if the EVAP Leak Detection Pump Switching Valve Output circuit is opened.
EVAP Monitor Complete This Ignition Cycle	-	Yes/No	This parameter displays the diagnostic monitor completion status during the current driving/monitoring cycle.
EVAP Monitor Enabled This Ignition Cycle	-	Yes/No	This parameter displays the diagnostic monitor enable status during the current driving/monitoring cycle.
EVAP Purge Solenoid Valve Command	-	10-20 %	This parameter displays the on-time or duty cycle of the EVAP canister purge solenoid commanded by the control module. Zero percent indicates no purge. One hundred percent indicates full purge.
EVAP Purge Solenoid Valve Control Circuit High Voltage Test Status	-	OK	This parameter displays the status of the evaporative emission (EVAP) purge solenoid control circuit. The scan tool displays OK, Malfunction, or Not Run. OK indicates that no circuit faults are detected during the current test.
EVAP Purge Solenoid Valve Control Circuit Low Voltage Test Status	-	OK	This parameter displays the status of the evaporative emission (EVAP) purge solenoid control circuit. The scan tool displays OK, Malfunction, or Not Run. OK indicates that no circuit faults are detected during the current test.
EVAP Purge Solenoid Valve Control Circuit Open Test Status	-	OK	This parameter displays the status of the evaporative emission (EVAP) purge solenoid control circuit. The scan tool displays OK, Malfunction, or Not Run. OK indicates that no circuit faults are detected during the current test.

EVAP Test	-	Varies	This parameter displays the state of the EVAP Test.
EVAP Vent Solenoid Valve Command	-	OFF	This parameter displays the state of the EVAP canister vent solenoid commanded by the control module. The scan tool displays ON Venting or OFF Not Venting.
EVAP Vent Solenoid Valve Control Circuit High Voltage Test Status	-	OK	This parameter displays the diagnostic state of the output driver for the evaporative emission vent solenoid control circuit as determined by the engine control module. The scan tool will display OK, Malfunction or Not Run. The scan tool will display OK if the circuit is operating correctly.
EVAP Vent Solenoid Valve Control Circuit Low Voltage Test Status	-	OK	This parameter displays the diagnostic state of the output driver for the evaporative emission vent solenoid control circuit as determined by the engine control module. The scan tool will display OK, Malfunction or Not Run. The scan tool will display OK if the circuit is operating correctly.
EVAP Vent Solenoid Valve Control Circuit Open Test Status	-	OK	This parameter displays the diagnostic state of the output driver for the evaporative emission vent solenoid control circuit as determined by the engine control module. The scan tool will display OK, Malfunction or Not Run. The scan tool will display OK if the circuit is operating correctly.
Exhaust Camshaft Position	-	Engine Idling: 5 Degrees Engine Speed at 2,000 RPM: 19 Degrees	This parameter displays the actual exhaust camshaft position in degrees.
Exhaust Camshaft Position Active Counter	-	0-255 Counts	This parameter displays an incrementing counter when the control module receives a signal from the exhaust camshaft position sensor.
Exhaust Camshaft Position Actuator Solenoid Valve Control Circuit High Voltage Test Status	-	OK	This parameter displays the state of the exhaust camshaft actuator solenoid control circuit. The parameter displays Malfunction if the camshaft actuator solenoid control circuit is shorted to voltage.
Exhaust Camshaft Position Actuator Solenoid Valve Control Circuit Low Voltage Test Status	-	OK	This parameter displays the state of the exhaust camshaft actuator solenoid control circuit. The parameter displays Malfunction if the camshaft actuator solenoid control circuit is shorted to ground.
Exhaust Camshaft Position Actuator Solenoid Valve Control Circuit Open Test Status	-	OK	This parameter displays the state of the exhaust camshaft actuator solenoid control circuit. The parameter displays Malfunction if the camshaft actuator solenoid control circuit is open.
Exhaust Camshaft Position Command	-	45-51 %	This parameter displays the on-time or duty cycle of the exhaust camshaft position actuator solenoid valve as commanded by the engine control module.
Exhaust Camshaft Position Variance	-	0.0-0.2 Degrees	This parameter displays in degrees, the difference between the desired exhaust camshaft position and the actual exhaust camshaft position.
Fuel Control Loop Status	-	Closed Loop	This parameter displays the state of the fuel control system as commanded by the control module. Closed loop operation indicates that the control module is controlling the fuel delivery based off the oxygen sensors input signal. In open loop operation the control module ignores the oxygen sensor input signal and bases the amount of fuel to be delivered on other sensor inputs.

Fuel Economy	Engine Idling	Litres per Hour	This Parameter displays the instant fuel consumption rate of the engine in litres per hour.
Fuel Enrichment - Hot Catalyst	-	No	This parameter displays Yes if the engine control module is commanding catalyst converter protection.
Fuel Enrichment - Hot Coolant	-	Inactive	This parameter displays the status of the fuel delivery system. The scan tool will display Active if the fuel system is running in open loop due to a temperature condition. The scan tool will display Inactive if the fuel system is operating normally.
Fuel Level Sensor	-	Varies	This parameter displays the approximate fuel level in the fuel tank as a voltage. The control module calculates this level using the signal from the sensor used to monitor the fuel in the tank. The scan tool will display a low reading when the fuel level in the tank is near empty. The scan tool will display a high reading when the fuel level in the tank is high or near full.
Fuel Maintenance Mode	-	Inactive	This parameter displays if the Fuel Maintenance Mode is active or inactive.
Fuel Maintenance Mode Counter	-	0-255	This parameter displays the number of fuel maintenance mode events over the life of the Engine Control Module (ECM).
Fuel Pump Enable Circuit High Voltage Test Status	-	OK/Not Run	This parameter displays the state of the fuel pump relay control circuit. The parameter displays Malfunction if the fuel pump control circuit is shorted to voltage.
Fuel Pump Enable Circuit Low Voltage Test Status	-	OK/Not Run	This parameter displays the state of the fuel pump control circuit. The parameter displays Malfunction if the fuel pump relay control circuit is shorted to ground.
Fuel Pump Enable Circuit Open Test Status	-	OK/Not Run	This parameter displays the state of the fuel pump control circuit. The parameter displays Malfunction if the fuel pump control circuit is opened.
Fuel Pump Enable Command	-	ON	This parameter displays the control modules commanded state of the fuel pump control circuit.
Fuel System Monitor Complete	-	No	This parameter displays Yes when the Fuel System Monitor is complete.
Fuel System Monitor Complete This Ignition Cycle	-	No	This parameter displays Yes when the Fuel System Monitor is Complete This Ignition Cycle.
Fuel System Monitor Enabled	-	No	This parameter displays Yes when the Fuel System Monitor is enabled.
Fuel System Monitor Enabled This Ignition Cycle	-	No	This parameter displays Yes when the Fuel System Monitor is Enabled This Ignition Cycle.
Fuel Tank Pressure Sensor	-	1.3-1.7 V	This parameter displays the voltage signal received by the control module from the fuel tank pressure sensor.
Fuel Tank Pressure Sensor	-	Varies	This parameter displays the pressure/vacuum inside the fuel tank. A negative value indicates a vacuum, while a positive value indicates a pressure.
Fuel Tank Rated Capacity	-	70 L (18.4 Gal)	This parameter displays the rated maximum quantity of fuel the fuel tank will hold. This is calibrated in the control module to match the vehicle.

Fuel Trim Memory Cell	-	Varies	This parameter displays the fuel trim cell number as calculated by the control module based on engine speed and load inputs. The scan tool will display a lower number as conditions are closer to idle, and a higher number as conditions approach maximum engine speed and maximum load.
Fuel Trim System Test State	-	Monitoring	This parameter indicates the status of the Fuel Trim System Test. The scan tool will display Disabled, Enabled, Monitoring, or Run Purge Test.
HO2S 1 or HO2S 2	Vehicle ON, Engine OFF	50-900 mV	This parameter indicates the heated oxygen sensor (HO2S) sensor 1 or 2, output voltage as measured by the control module. The scan tool will display a higher value during a rich condition, and a lower value during a lean condition.
	Engine Operating	Varies	
HO2S 1 or HO2S 2 Heater	-	0.42-0.62 A	This parameter displays the amperage of the HO2S heater commanded by the engine control module.
HO2S 1 or HO2S 2 Heater Command	-	0-99 %	This parameter displays the commanded state of the HO2S 1 or HO2S 2 heater by the control module. The scan tool will display a higher value as the heater command is increased, and a lower value if the heater is not commanded ON.
HO2S 1 or HO2S 2 Heater Command	-	ON	This parameter displays the commanded state of the HO2S 1 or HO2S 2 heater circuit by the control module. The scan tool will display ON when the heater is commanded ON. The scan tool will display OFF when the heater is commanded OFF.
HO2S 1 or HO2S 2 Heater Control Circuit High Voltage Test Status	-	OK	This parameter displays the status of the control circuit for the HO2S 1 or HO2S 2. The scan tool displays OK, Malfunction, or Not Run. OK indicates that no circuit Malfunctions are detected during the current test.
HO2S 1 or HO2S 2 Heater Control Circuit Low Voltage Test Status	-	OK	This parameter displays the status of the control circuit for the HO2S 1 or HO2S 2. The scan tool displays OK, Malfunction or Not Run. OK indicates that no circuit Malfunctions are detected during the current test.
HO2S 1 or HO2S 2 Heater Control Circuit Open Test Status	-	OK	This parameter displays the status of the control circuit for the HO2S 1 or HO2S 2. The scan tool displays OK, Malfunction or Not Run. OK indicates that no circuit Malfunctions are detected during the current test.
HO2S Heater Monitor Complete	Engine Idling	Yes/No	This parameter displays the diagnostic monitor completion status during the current driving/monitoring cycle.
HO2S Heater Monitor Complete This Ignition Cycle	-	Yes/No	This parameter displays the diagnostic monitor completion status during the current driving/monitoring cycle.
HO2S Heater Monitor Enabled	Engine Idling	Yes/No	This parameter displays the diagnostic monitor enable status during the current driving/monitoring cycle.
HO2S Heater Monitor Enabled This Ignition Cycle	-	Yes/No	This parameter displays the diagnostic monitor enable status during the current driving/monitoring cycle.
Bonnet Ajar Switch 1	-	Ajar	This parameter displays the Bonnet Ajar 1 switch as either Closed or Ajar.

Bonnet Ajar Switch 2	-	Ajar	This parameter displays the Bonnet Ajar 2 switch as either Closed or Ajar.
Bonnet Position	-	Open	This parameter displays the Bonnet Position as Closed, Ajar, Open or Invalid. Bonnet Open indicates that the state of the hood switch prevented an Autostop. Autostops are not allowed with the bonnet open.
Hybrid/EV Battery Pack Charge Remaining	-	Varies	This parameter displays the amount of charge left in the Hybrid/EV Battery Pack.
Hybrid Transmission Mode Command	-	Park/Neutral	This parameter displays the current Hybrid Transmission Mode. • Park/Neutral • EV1 • EV2 • Gear 1 • Gear 2 • Gear 3 • Gear 4 • Invalid
IAT Sensor	-	-39 to +140°C (-38 to +284°F)	This parameter displays the temperature of the air entering the air induction system based on input to the control module from the intake air temperature (IAT) sensor.
Ignition 1 Signal	-	B+	This parameter displays B+ when the control module detects a voltage at the ignition 1 input terminal.
Ignition Accessory Signal	-	ON	This parameter displays the state of the ignition accessory position input to the control module from the ignition switch.
Ignition Coil 1 and 4 Control Circuit High Voltage Test Status	-	OK	This parameter displays the state of the Ignition control circuit. The scan tool displays OK, Malfunction, or Not Run. OK indicates that no circuit faults are detected during the current test.
Ignition Coil 1 and 4 Control Circuit Low Voltage Test Status	-	OK	This parameter displays the state of the Ignition control circuit. The scan tool displays OK, Malfunction, or Not Run. OK indicates that no circuit Malfunction are detected during the current test.
Ignition Coil 1 and 4 Control Circuit Open Test Status	-	OK	This parameter displays the state of the Ignition control circuit. The scan tool displays OK, Malfunction or Not Run. OK indicates that no circuit Malfunction are detected during the current test.
Ignition Coil 2 and 3 Control Circuit High Voltage Test Status	-	OK	This parameter displays the state of the Ignition control circuit. The scan tool displays OK, Malfunction, or Not Run. OK indicates that no circuit faults are detected during the current test.
Ignition Coil 2 and 3 Control Circuit Low Voltage Test Status	-	OK	This parameter displays the state of the Ignition control circuit. The scan tool displays OK, Malfunction, or Not Run. OK indicates that no circuit faults are detected during the current test.
Ignition Coil 2 and 3 Control Circuit Open Test	-	OK	This parameter displays the state of the Ignition control circuit. The scan tool displays OK, Malfunction,

Status			or Not Run. OK indicates that no circuit faults are detected during the current test.
Ignition Cycles Since Last Completed Engine Maintenance Mode	-	Days	This parameter displays the elapsed time in days since the most recent completion of Engine Maintenance Mode.
Ignition Cycles Since Last Completed Fuel Maintenance Mode	-	Days	This parameter displays the elapsed time in days since the most recent completion of Fuel Maintenance Mode.
Ignition Cycles with Malfunction Since 1st Malfunction	Vehicle ON	Counts	This Parameter displays the number of ignition cycles with a malfunction reported since the first ignition cycle with a malfunction reported.
Ignition Cycles without Completed Test Since 1st Malfunction	-	Counts	This Parameter displays the number of ignition cycles without a malfunction reported since the first ignition cycle.
Ignition Cycles without Malfunction Since Last Malfunction	Vehicle ON	Counts	This Parameter displays the number of ignition cycles with a pass reported and no malfunctions reported since the first ignition cycle with a malfunction reported.
Ignition Timing	-	-4 to +15 Degrees	This parameter displays the amount of spark advance the control module is commanding. The engine control module determines the desired advance.
Ignition Timing	-	Degrees	This parameter displays the final spark advance in terms of a crankshaft angle
Immobiliser Password Learn	-	Yes	This parameter displays Yes when a valid theft password has been learned.
Immobiliser Security Information Programmed	-	Yes	This parameter displays if the immobilizer system security code has been programmed.
Immobiliser System Status	-	Varies	This parameter displays the current state of the immobiliser System Status. The states include the following: Standby, Disabled at Startup, Disabled Due to No Response, Disabled Due to Negative Response, Disabled Due to Incorrect Response, Post Release, Pre-Release, Released.
Injector Duty Cycle	-	1.5-3 ms	This parameter displays the average pulse width of the fuel injectors as determined by the control module.
Intake Camshaft Position Active Counter	-	0-255 Counts	This parameter displays an incrementing counter when the control module receives a signal from the intake camshaft position sensor.
Intake Camshaft Position Actuator Solenoid Valve Control Circuit High Voltage Test Status	-	OK	This parameter displays the state of the intake camshaft position actuator solenoid valve control circuit. The parameter displays Malfunction if the camshaft actuator solenoid control circuit is shorted to voltage.
Intake Camshaft Position Actuator Solenoid Valve Control Circuit Low Voltage Test Status	-	OK	This parameter displays the state of the intake camshaft position actuator solenoid valve control circuit. The parameter displays Malfunction if the camshaft actuator solenoid control circuit is shorted to ground.

Intake Camshaft Position Actuator Solenoid Valve Control Circuit Open Test Status	-	OK	This parameter displays the state of the intake camshaft position actuator solenoid valve control circuit. The parameter displays Malfunction if the camshaft actuator solenoid control circuit is open.
Intake Camshaft Position Variance	-	Degrees	This parameter displays in degrees, the difference between the desired intake camshaft position and the actual intake camshaft position.
Intake Manifold Pressure	-	32-53 kPa (4.6-7.6 PSI)	This parameter displays the pressure difference between the Manifold Absolute Pressure (MAP) and the barometric pressure (BARO) as calculated by the control module.
Knock Retard	-	0°	This parameter displays the amount of spark advance the control module removes from the ignition control spark advance in response to the signal from the knock sensors.
Last Engine Maintenance Mode	-	Incomplete	This parameter displays the status of the Last Engine Maintenance Mode.
Long Term Fuel Trim	-	-10 to +10 %	The scan tool range is -99 to +99 %. This parameter indicates the Long Term fuel trim correction as commanded by the ECM. A change made to the fuel delivery will be indicated by the Long and Short Term values. The Short Term values change rapidly in response to the HO2S signal voltages. These changes fine tune the engine fueling. The Long Term values change in response to the changes in the Short Term. The Long Term makes coarse adjustments to the fueling in order to recenter and restore control to the Short Term. The Short Term and the Long Term can be monitored with a scan tool. A positive fuel trim value indicates that the ECM is adding fuel in order to compensate for a lean condition. A negative fuel trim value indicates that the ECM is reducing the amount of fuel in order to compensate for a rich condition.
Long Term Fuel Trim Test Average	-	0.98 % Varies	This parameter is the average long term fuel trim for this bank as calculated by the control module. The scan tool will display a value more than 0 % indicating that time is being added to the injector pulse width, increasing the amount of fuel to this bank of the engine. The scan tool will display a value of less than 0, indicating time is being subtracted from the injector pulse width, reducing the amount of fuel to this bank of the engine. A value of 0 % indicates no compensation is required to operate the engine at the desired air/fuel ratio.
Long Term Fuel Trim Test Average without Purge	-	1.02 % Varies	This parameter is calculated by the control module based on the Short Term Fuel Trim value. The Long Term Fuel Trim is used for the long term correction of the fuel delivery. The scan tool will display a high value for a large amount of long term fuel correction, and 0 % for no long term fuel trim correction. The scan tool will display a negative value when fuel system is running too rich and fuel is being removed from the combustion event. The scan tool will display a positive value if the fuel system is running lean and fuel is being added to the combustion event.
Low Voltage Battery Discharge Current	-	No	This parameter displays the state of the 12 V Low Voltage Battery Discharge.
MAF Performance Test	-	OK	This parameter displays the status of the mass air flow (MAF) performance test by the control module. The scan tool will display OK if no condition is detected. The scan tool will display Malfunction if the control module detects a condition during the test.
	Engine		

MAF Sensor	Idling	1.7-3.7 g/s	This parameter indicates the quantity calculated by the control module based on a signal from the MAF sensor. The scan tool will display a high value at high engine speeds, and a low value at low engine speeds.
	Engine speed at 2 500 RPM	5.5-7.5 g/s	
MAF Sensor	-	1 700-2 100 Hz	This parameter indicates the frequency signal received from the MAF sensor by the control module. The scan tool will display a high value at high engine speeds, and a low value at low engine speeds.
MAF Sensor Supply Voltage Command	-	ON	This parameter displays the commanded state of the MAF sensor supply voltage output.
MAF Sensor Supply Voltage Control Circuit High Voltage Test Status	-	OK or Not Run	This parameter displays the status of the Supply Voltage Control circuit for the MAF Sensor. The scan tool displays OK, Malfunction, or Not Run. OK indicates that no circuit malfunctions are detected during the current test.
MAF Sensor Supply Voltage Control Circuit Low Voltage Test Status	-	OK or Not Run	This parameter displays the status of the Supply Voltage Control circuit for the MAF Sensor. The scan tool displays OK, Malfunction, or Not Run. OK indicates that no circuit malfunctions are detected during the current test.
MAF Sensor Supply Voltage Control Circuit Open Test Status	-	OK or Not Run	This parameter displays the status of the Supply Voltage Control circuit for the MAF Sensor. The scan tool displays OK, Malfunction, or Not Run. OK indicates that no circuit malfunctions are detected during the current test.
MAF When Engine Overspeed Detected	-	g/s	This parameter displays the intake mass airflow observed upon initial detection of an overspeed condition. This value will be updated upon each subsequent overspeed condition.
Maintenance Mode Disabled Low Fuel Level	-	No	This parameter displays Maintenance Mode Disabled Due to Low Fuel Level. The scan tool displays Yes or No.
Maintenance Mode Status	-	Varies	This parameter displays the current status of the Maintenance Mode.
MAP Performance Test 1	-	OK	This parameter displays the status of the MAP performance test 1 by the engine control module. The scan tool will display OK if no malfunction is found. The scan tool will display malfunction if the engine control module detects a malfunction during the test.
MAP Performance Test 2	-	OK	This parameter displays the status of the MAP performance test 2 by the engine control module. The scan tool will display OK if no malfunction is found. The scan tool will display malfunction if the engine control module detects a malfunction during the test.
MAP Sensor	-	26-52 kPa (3.7-7.6 PSI)	This parameter displays the pressure from the MAP sensor to the engine control module.
MAP Sensor	-	0.98-1.42 V	This parameter displays the signal voltage from the MAP sensor to the engine control module.
Maximum Engine Speed When Engine Overspeed Detected	-	RPM	This parameter displays the maximum engine speed observed during all overspeed condition and stores this information in the engine control module.
MIL Command	Vehicle ON	ON/OFF	This parameter displays the commanded state of the malfunction indicator lamp (MIL) control circuit by the engine control module (ECM).
MIL Control Circuit High Voltage Test Status	-	OK	This parameter displays the status of the control circuit for the malfunction indicator lamp control (MIL). The scan tool displays OK, Malfunction, or Not Run. OK indicates that no circuit malfunctions are

			detected during the current test.
MIL Control Circuit Low Voltage Test Status	-	OK	This parameter displays the status of the control circuit for the malfunction indicator lamp control (MIL). The scan tool displays OK, Malfunction, or Not Run. OK indicates that no circuit malfunctions are detected during the current test.
MIL Control Circuit Open Test Status	-	OK	This parameter displays the status of the control circuit for the malfunction indicator lamp control (MIL). The scan tool displays OK, Malfunction, or Not Run. OK indicates that no circuit malfunctions are detected during the current test.
MIL Requested	Vehicle ON	Yes/No	This parameter displays the reason the engine control module illuminated the MIL. The scan tool will display Yes when the MIL is requested as a result of an A or B type DTC. The scan tool will display No if the MIL is illuminated for another reason, such as transmission DTCs.
MIL Requested by DTC	-	No	This parameter indicates the reason the control module illuminated the MIL. The scan tool will display Yes when the MIL is requested as a result of an A or B type DTC. The scan tool will display No if the MIL is illuminated for another reason, such as transmission DTCs.
Misfire Monitor Complete	-	No	This parameter displays the status of the Misfire Monitor. The parameter will display Yes when the Misfire Monitor is Complete.
Misfire Monitor Complete This Ignition Cycle	-	Yes/No	This parameter displays the diagnostic monitor completion status during the current driving/monitoring cycle.
Misfire Monitor Enabled	-	Yes/No	This parameter displays the status of the Misfire Monitor. The parameter will display Yes when the Misfire Monitor is Enabled.
Misfire Monitor Enabled This Ignition Cycle	-	Yes/No	This parameter displays the diagnostic monitor enable status during the current driving/monitoring cycle.
Not in Run Mode	-	No	This parameter displays Yes or No if the Run/Crank mode is not active.
Number of DTC(s)	-	0	This parameter indicates the number of diagnostic trouble codes (DTCs).
O2S/HO2S Monitor Complete	Engine Idling	Yes/No	This Parameter displays the enable and completion status during the current driving/monitoring cycle of each continuous legislated emission related monitor and non continuous legislated emission related monitor.
O2S/HO2S Monitor Complete This Ignition Cycle	-	Yes/No	This parameter displays the diagnostic monitor completion status during the current driving/monitoring cycle.
O2S/HO2S Monitor Enabled	Engine Idling	Yes/No	This Parameter displays the enable and completion status during the current driving/monitoring cycle of each continuous legislated emission related monitor and non continuous legislated emission related monitor.
O2S/HO2S Monitor Enabled This Ignition Cycle	-	Yes/No	This parameter displays the diagnostic monitor enable status during the current driving/monitoring cycle.
Odometer When Engine Overspeed Detected	-	km/miles	This parameter displays the vehicle odometer reading in km/miles upon initial detection of an overspeed condition by the engine control module.
	Vehicle		

Output Shaft Speed Sensor	needs to be moving	RPM	This Parameter displays the transmission output speed (the speed at the output of the gear box) determined from the speed measured by the transmission output speed sensor.
Power Mode	Vehicle ON	OFF/Accessory/Run/Crank Request	This Parameter displays the state of the System Power Mode. This signal is based upon the state of the system power mode received over serial communication from the vehicle electronics. If the serial data signal not received, the Parameter will display OFF.
Radiator Coolant Temperature Sensor	-	88-105°C (190-221°F)	The temperature of the engine coolant based on a voltage input from the radiator coolant temperature (RCT) sensor to the engine control module.
RCT vs. IAT Sensor Temperature at Last ECT vs. RCT Malfunction Detection	-	Agree, Disagree, Disabled	RCT/IAT Sensors Disagree indicates that the temperature values of the RCT and IAT sensors did not agree at the time of the most recent failure of the ECT/RCT rationality diagnostic (DTC P00B6).
Reduced Engine Power	-	Inactive	This parameter displays the status of the operating mode of the control module used to reduce engine power to prevent catalyst converter or engine damage or due to a Throttle Actuator Control (TAC) system condition.
Reduced Engine Power History	-	OK	This parameter displays the last reason that ECM has Commanded Reduced Engine Power. The scan tool displays one of the following when Reduced Engine Power is commanded: • TAC DTC • Fan Control DTC • ECT Overtemperature • Engine Oil Overtemperature
Remaining Fuel in Tank	-	0-100 % Varies	This parameter displays the amount of fuel remaining in the fuel tank as measured in percentage. The control module determines the amount of fuel remaining in the tank by using information from the fuel level sensors. The scan tool will display a higher value with a full fuel tank, and a lower value with an empty fuel tank.
Remaining Fuel in Tank	-	Litres (Gallons) Varies	This parameter displays the amount of fuel remaining in the fuel tank as measured in litres (gallons). The control module determines the amount of fuel remaining in the tank by using information from the fuel level sensor. The scan tool will display a higher value with a full fuel tank, and a lower value with an empty fuel tank.
Short Term Fuel Trim	-	-10 to +10 %	The Short Term values change rapidly in response to the HO2S signal voltages. These changes fine tune the engine fueling. The Long Term values change in response to the changes in the Short Term. The Long Term makes coarse adjustments to the fueling in order to recenter and restore control to the Short Term. The Short Term and the Long Term can be monitored with a scan tool. A positive fuel trim value indicates that the ECM is adding fuel in order to compensate for a lean condition. A negative fuel trim value indicates that the ECM is reducing the amount of fuel in order to compensate for a rich condition.
Short Term Fuel Trim Test Average	-	-3 to +99 % Varies	This parameter displays the short term closed loop fuel correction. This value is compared to predetermined thresholds to determine if the fuel trim diagnostic is passing or failing.

Starter Relay Command	-	OFF	The scan tool displays ON or OFF. The scan tool displays OFF until the ignition is placed into the CRANK position.
Starter Relay Control Circuit High Voltage Test Status	-	OK	This parameter displays the status of the control circuit for the starter relay. The scan tool displays OK, Malfunction, or Not Run. OK indicates that no circuit malfunctions are detected during the current test.
Starter Relay Control Circuit Low Voltage Test Status	-	Not Run	This parameter displays the status of the control circuit for the starter relay. The scan tool displays OK, Malfunctions, or Not Run. OK indicates that no circuit malfunctions are detected during the current test.
Starter Relay Control Circuit Open Test Status	-	OK	This parameter displays the status of the control circuit for the starter relay. The scan tool displays OK, malfunction, or Not Run. OK indicates that no circuit malfunctions are detected during the current test.
Start Up ECT	-	-39 to +140°C (-38 to +284°F)	This parameter displays the temperature of the engine coolant on start up based on input to the control module from the ECT sensor 1.
Start Up IAT	-	-39 to +140°C (-38 to +284°F)	This parameter displays the temperature of the intake air at start in the air induction system based on input to the control module from the IAT sensor.
SVS Indicator Command	-	OFF	This parameter displays that the Service Vehicle Soon lamp is being commanded on due to the malfunction of a non emission related diagnostic test.
TAC Forced Engine Shutdown	-	No	This parameter displays the status of TAC control by the control module. The scan tool will display Yes if the engine has been shut down due to a throttle control malfunction. The scan tool will display No if the engine has not been shut down by a throttle control malfunction.
TAC Motor	-	Disabled	This parameter displays the status of the TAC motor driver by the control module. The scan tool will display Enabled if TAC motor operation is allowed. The scan tool will display disabled if the TAC motor is disabled.
TAC Motor Command	-	0-100 % Varies	This parameter displays the percentage of the commanded state of the TAC motor by the control module.
Throttle Body Idle Air Flow Compensation	-	0-100 % Varies	This parameter displays the amount of airflow compensation in response to engine intake air flow restrictions.
Throttle Position	-	2-9 %	This parameter displays the actual throttle position angle indicated by the control module using information from the two Throttle Body sensors.
Throttle Position Performance Test	-	OK	This parameter displays the status of the throttle position performance test by the control module. The scan tool will display OK if no malfunction is found. The scan tool will display Malfunction if the control module detects a malfunction during the test.
Throttle Position Sensor 1	Accelerator pedal not actuated	4.14-4.34 V	This parameter displays the voltage signal sent to the control module from throttle position sensor 1 of the throttle assembly. The throttle position sensor 1 is a range of values indicating a high voltage when the throttle is closed to a low voltage when the throttle plate is fully open.
	Accelerator pedal fully	3.50-3.37 V	

	actuated		
Throttle Position Sensor 1 Learned Minimum	-	0.5-0.71 V	This parameter displays the learned minimum voltage for throttle position sensor 1 as determined by the control module this ignition cycle.
Throttle Position Sensor 1 Position	-	2-6 %	This parameter displays the angle of the throttle position sensor 1 as calculated by the control module using the signal from the throttle position sensor 1. The throttle position sensor 1 is a range of values indicating a low percentage when the throttle is closed to a high percentage when the throttle is fully open.
Throttle Position Sensor 2	Accelerator pedal not actuated	0.68-0.88 V	This parameter displays the voltage signal sent to the control module from throttle position sensor 2 of the throttle assembly. The throttle position sensor 2 is a range of values indicating a low voltage when the throttle is closed to a high voltage when the throttle plate is fully open.
	Accelerator pedal fully actuated	1.35-1.55 V	
Throttle Position Sensor 2 Learned Minimum	-	0.55-0.75 V	This parameter displays the learned minimum voltage for throttle position sensor 2 as determined by the control module this ignition cycle.
Throttle Position Sensor 2 Position	-	2-6 %	This parameter displays the angle of the throttle position sensor 2 as calculated by the control module using the signal from the throttle position sensor 2. The throttle position sensor 2 is a range of values indicating a low percentage when the throttle is closed to a high percentage when the throttle is fully open.
Throttle Position Sensors 1 and 2	-	Agree	This parameter displays the results of a control module test that compares the signals from the Throttle Body sensors 1 and 2. The scan tool will display Agree or Disagree. Agree indicates that throttle position sensor 1 and throttle position sensor 2 voltages correspond to the same throttle position. Disagree indicates that throttle position sensor 1 and throttle position sensor 2 voltages correspond to different throttle positions.
Time Since Last Refuel Event	-	Days	This parameter displays the amount of time in the form of days since the most recent refuelling event.
Torque Management Ignition Timing Retard	-	15-25 Degrees	This parameter displays how much the ignition spark timing is being retarded to control torque by the control module. The scan tool will display a higher value under extreme torque control conditions such as spinning wheels. The scan tool will display a lower value under low torque control conditions such as light driving.
Torque Request Inhibit - Fuel	Engine Idling	Yes/No	This Parameter displays the existing condition in the ECM causing the transmission torque request to be limited.
Torque Request Inhibit - Ignition Timing	Engine Idling	Yes/No	This Parameter displays the existing condition in the ECM causing the transmission torque request to be limited.
Torque Request Inhibit - Ignition Timing Advance	Engine Idling	Yes/No	This Parameter displays the existing condition in the ECM causing the transmission torque request to be limited.
Torque Request Inhibit - Minimum Idle	Engine Idling	Yes/No	This Parameter displays the existing condition in the ECM causing the transmission torque request to be limited.

Torque Request Inhibit - Minimum Torque	Engine Idling	Yes/No	This Parameter displays the existing condition in the ECM causing the transmission torque request to be limited.
Torque Request Inhibit - TAC	Engine Idling	Yes/No	This Parameter displays the existing condition in the ECM causing the transmission torque request to be limited.
Torque Request Inhibit - TAC Limit	Engine Idling	Yes/No	This Parameter displays the existing condition in the ECM causing the transmission torque request to be limited.
Total Knock Retard	-	0°	This parameter displays how much ignition spark timing is being retarded due to all control systems monitored by the control module. The scan tool will display a high value during extreme conditions such as high temperatures and antilock braking. The scan tool will display a lower value during lighter driving conditions.
Vehicle Speed Sensor	-	0 km/h (0 MPH)	This parameter displays the speed of the vehicle as calculated by the transmission control module (TCM) from information received from the vehicle speed sensor.
Vehicle Speed When Engine Overspeed Detected	-	km/MPH	This parameter displays the vehicle speed observed upon initial detection of an overspeed condition by the engine control module.
Warm-Ups Since DTC Cleared	-	Varies	This parameter displays the number of warm-ups since the DTC was cleared in counts.
Warm-Ups without Emission Malfunctions	-	Varies	This parameter displays the number of warm-up cycles that have occurred without an emission malfunction present. The scan tool will display a 0 if a malfunction has occurred. The scan tool will display a higher count if a number of warm-up cycles have occurred without an emission malfunction.
Warm-Ups without Non-Emission Malfunctions	-	Varies	This parameter displays the number of warm-up cycles that have occurred without a non-emission malfunction present. The scan tool will display a 0 if a malfunction has occurred. The scan tool will display a higher count if a number of warm-up cycles have occurred without a non-emission malfunction.
Wide Open Throttle	-	No	This parameter displays the throttle status commanded by the control module. The scan tool will display Yes if the vehicle throttle is commanded to wide open. The scan tool will display No if the vehicle throttle is commanded to an amount less than 100 %.

Engine Control Module (ECM) Scan Tool Output Controls

Output Control	Description
A/C Compressor Clutch Relay	This device control is used to activate the Air Conditioning Compressor Clutch.
Camshaft Position Actuator Solenoid Valve	This device control is used to override the state of the camshaft position actuator solenoid output.
Crankshaft Position Variation Learn	This device control is used to activate the crankshaft position variation learn software which calculates the reference pulse correction factors for the misfire diagnostic.
	This function disables the selected fuel injector. The normal commanded state is None. The scan tool initiates the test when the following conditions

Cylinder Power Balance	are met: • The engine is operating and the engine idle is stable. • The vehicle speed is 0 km/h (0 mph). • There are no vehicle speed sensor DTCs set. If the fuel injector is disabled after 30 s, fuel injector control is not allowed again on the same fuel injector for 60 s.
Engine Speed	This function controls the idle speed override in 25 RPM, 100 RPM, and 500 RPM increments, from the base idle speed to 1 950 RPM. The scan tool initiates the test when the following conditions are met: • The vehicle speed is 0 km/h (0 mph). • There are no VSS sensor DTCs set.
EVAP Leak Detection Pump Command	This function turns the EVAP Leak Detection Pump ON and OFF.
EVAP Leak Detection Pump Switching Valve Command	This device control is used to change the state of the canister vent control valve output from Not Venting or Venting.
EVAP Purge Solenoid Valve	This function controls the EVAP purge solenoid valve. The normal commanded state is None. The system will increase or decrease the amount of purge by changing the duty cycle of the purge valve in 10 % increments within a range of 0-100 %. The scan tool initiates the test when the following conditions are met: • The vacuum level in the EVAP purge system is within range. • There are no EVAP DTCs set. • The EVAP system test is not in progress. • In the correct Power Mode.
EVAP Vent Solenoid Valve Command	This function controls the EVAP vent solenoid. The normal commanded state is None. When commanded ON, the vent valve switches to not venting. When commanded OFF, the vent valve switches to venting. The scan tool initiates the test when the following conditions are met: • The vacuum level in the EVAP purge system is within range. • There are no EVAP DTCs set. • The EVAP system test is not in progress. • In the correct power mode.
Fuel Control Loop Status	This device control is used to enable or disable closed loop fuel control.
Fuel Filter Life Reset	This device control is used to reset the Fuel Life in the ECM after replacement.
	This function enables the fuel injector in order to verify proper fuel injector flow. The ECM will pulse the selected injector when the following conditions are met: • All instruction on the scan tool completed.

Fuel Injector Balance	• Fuel injector selected. • Key ON, engine OFF. The selected fuel injector can only be flowed or pulsed once per ignition cycle.
Fuel Pump Enable	This function controls the fuel pump. The normal commanded state is NONE. The scan tool initiates the test when the following conditions are met: • There are no vehicle speed sensor DTCs set. • The vehicle speed is 0 km/h (0 mph). When commanded ON/OFF, the engine control module (ECM) turns the fuel pump module ON/OFF. If the engine is running and the fuel pump is commanded OFF, the engine will stall. The system remains in the commanded state for about 2 seconds or until cancelled by the scan tool or the ECM detects a vehicle speed.
Fuel Trim Enable	This function enables or disables the ECM fuel trim learning. The normal commanded state is None.
Fuel Trim Reset	This function is used to reset the learned fuel trim values to their initial values.
HO2S Heater Learn	This function is used to trigger the reset of the learned resistances for the oxygen sensor heaters following a replacement. The learned resistances are reset to a calibration used to prevent overheating of the sensors until more accurate resistances may be learned following an extended engine OFF time.
HO2S Heater Sensor 1 or 2	This function controls the selected HO2S heater. The normal commanded state is None, ON, and OFF. Commanding the HO2S heater ON turns on the heater driver. The scan tool initiates the test when the following conditions are met: • The engine is operating. • The exhaust temperature is within range. • In the correct power mode. • The HO2S heaters are not over temperature. • The ignition voltage is not out of range while commanding the heaters ON.
HO2S Test	This device control is used to trigger a service bay procedure to execute the oxygen sensor response test following a sensor replacement in service. This procedure is required to set the oxygen sensor inspection and maintenance ready flag.
Idle Ignition Timing	Disables and enables idle spark advance with the engine running.
Ignition Timing Retard	This function is used to control the amount of spark retard. The normal commanded state is None. The system will increase or decrease the amount of spark retard by 1° increments within a range of 0-10° maximum retard. The system remains in the commanded state until cancelled by the tool.
MAF Sensor Supply Voltage Low Side Driver Command	This device control is used to override the state of the mass air flow sensor supply voltage output. Engine must be running.
Malfunction Indicator Lamp (MIL)	This function controls the malfunction indicator lamp (MIL). The normal commanded state is None. When commanded ON or OFF, the ECM turns the malfunction indicator lamp (MIL) ON or OFF. This output can also be monitored on the scan tool data parameter MIL Command. The system remains in the commanded state until cancelled by the scan tool.
Misfire Graphic	This function is used to graph the accumulated misfires occurring in each cylinder. The scan tool allows for a reset of the misfire graph.
Programming History	This function displays the history buffer entries for the primary calibration part in the engine controller.

Throttle Position	This function controls the throttle valve in 10 % increments. The scan tool initiates the test when the following conditions are met: • The engine speed is 0 RPM. • The vehicle speed is 0 km/h (0 mph). The system remains in the commanded state until cancelled by the scan tool.
Throttle Sweep	This function moves the Throttle plate slowly from a closed position to wide open position, aiding diagnosis of TAC motor.

&#169© Copyright Chevrolet. All rights reserved

Fuel Pump Flow Control Module Scan Tool Information

Table 1: Fuel Pump Flow Control Module Scan Tool Data Parameters
Table 2: Fuel Pump Flow Control Module Scan Tool Output Controls

Fuel Pump Flow Control Module Scan Tool Data Parameters

Parameter	System State	Expected Value	Description
Operating Conditions: Vehicle in Service Mode/Engine Idling at Normal Operating Temperature / Vehicle is in Park or Neutral			
Desired Fuel Rail Pressure	-	306.8 kPa (44.5 psi)	This displays kPa (psi). This is the desired fuel rail pressure.
Fuel Pump Command	-	On	The scan tool displays On or Off. This is the current state of the fuel pump command.
Fuel Pump Signal Command	-	Varies	This displays %. This is the commanded fuel pump signal measured in percentage.
Fuel Rail Pressure Sensor	-	296.4-310.3 kPa (43-45 psi)	This displays kPa (psi). This is the current pressure at the fuel rail pressure sensor.
Fuel Rail Pressure Sensor	-	4.90-5.01 Volts	This displays Volts. This is the fuel rail pressure sensor voltage.
Ignition 1 Signal	-	Varies	This displays Volts. This is the current ignition 1 signal.
LT Fuel Pump Trim	-	Varies	This displays a numeric value. This is the long term (LT) fuel pump trim.
ST Fuel Pump Trim	-	Varies	This displays a numeric value. This is the short term (ST) fuel pump trim.

Fuel Pump Flow Control Module Scan Tool Output Controls

Output Control	Description
Fuel Pressure Control	This output control is used to control the fuel pressure.
Fuel Pump	This output control is used to command the fuel pump ON and OFF.
Fuel Pump Trim Reset	This output control is used to reset the fuel pump trim.

© Copyright Chevrolet. All rights reserved

Hybrid Powertrain Control Module 2 Scan Tool Information

Table 1: Battery Charger Control Module Scan Tool Data Parameters
Table 2: Contactor Scan Tool Data Parameters
Table 3: Hybrid/EV/EV Battery Contactor Scan Tool Data Parameters
Table 4: Fuel System Scan Tool Data Parameters
Table 5: HVAC System Scan Tool Data Parameters
Table 6: Hybrid Powertrain Control Module 2 Scan Tool Data Parameters
Table 7: Temperature Scan Tool Data Parameters
Table 8: Voltage Scan Tool Data Parameters

Battery Charger Control Module Scan Tool Data Parameters

Parameter	Expected Value	Definition
Operating Conditions: Vehicle in Service Mode		
Battery Charging System High Voltage Interlock Circuit Status	Unknown/Pass/Fail	The status (on/off) of the interlock circuit that is used by the hybrid battery charging system to turn off high voltage circuits to prevent persons from getting hurt in case of service repairs.
Battery Charging System High Voltage Interlock Circuit	De-energised/Energised	This interlock circuit is used by the hybrid battery charging system to turn off high voltage circuits to prevent persons from getting hurt in case of service repairs.
Battery Charger Input	Volts	Battery Charger Control Module Input voltage or current.
Battery Charger Input	Amps	Battery Charger Control Module Input voltage or current.
Battery Charging System Operating Conditions	Not OK/OK	Indicates if the situation under which the battery charging system is operating are in range to allow charging.
Battery Charger Input 120V AC	No/Yes	Indicates the battery charging system is connected to 120V AC.
Battery Charger Input 240 VAC	No/Yes	Indicates the battery charging system is connected to 240V AC.
Hybrid/EV battery		

Pack at Maximum Voltage	Yes/No	Indicates the Hybrid/EV Battery pack is at the maximum allowable voltage.
Battery Charging System	Not OK/OK	Components that make up the system which allows the battery to be charged.
Battery Charging System Sensors	Not OK/OK	Sensors that monitor the status of the components that make up the system which allows the battery to be charged.
Battery Charging System Contactor Inhibit	Yes/No	Indicates if the battery charging system contactors (relays) are being prevented from closing.
Battery Charging Allowed	Yes/No	Indicates if battery charging of the hybrid system is permissible by the control module.
Charging	Inactive/Active	This string is used to describe a Status or Setting. Indicates an electronic system is in the process of being energised
Hybrid/EV battery Pack Charging Process Status	Complete/Incomplete	Indicates if the Hybrid/EV Battery pack charging has completed or not.
Battery Charging Delay Timer	Not Expired/Expired	The timer that allows charging to be delayed to a later time. For hybrid vehicles.
Battery Charging Run Timer	Expired/Not Expired	The timer for maximum charging time.
Battery Charger Capacitors	Discharged/Charged	Energy storage devices within the battery charger.
Battery Charging System Receptacle Switch	Inactive/Active/Low/High/Invalid	Switch at the receptacle where the vehicle is plugged in for battery charging.
Battery Charging System Receptacle Door	Closed/Open/Unknown	Door at the receptacle where the vehicle is plugged in for battery charging.
Battery Charger High Output	kW	Battery Charger Control Module high voltage or current output.
Battery Charger Low Output	kW	Battery Charger Control Module low voltage or current output.
Battery Charger High Voltage Power Output Available	kW	The maximum battery charger power output available for hybrid battery pack charging. In kW.
Battery Charger Power Input Available	kW	The maximum power available at the battery charger plug receptacle coming from a wall outlet.
Hybrid/EV battery		

Pack Charging Request	Inactive/Active	The request to charge the Hybrid/EV Battery pack.
Battery Charger Total Power Output Available	Watts	The maximum battery charger power output available for low voltage battery and hybrid battery pack charging
Hybrid/EV battery Pack Charging Limit	Watts	The maximum Hybrid/EV Battery pack charge power in Watts.
Battery Charger High Output	Volts	Battery Charger Control Module high voltage or current output.
Battery Charger High Output	Amps	Battery Charger Control Module high voltage or current output.
Battery Charger Low Output	Volts	Battery Charger Control Module low voltage or current output.
Battery Charger Low Output	Amps	Battery Charger Control Module low voltage or current output.
Battery Charger Temperature	Degrees C	Battery Charger Control Module temperature.
Battery Charger High Voltage Energy Output During Last Charge	kW-Hr	The energy (kWh) the battery charger has pumped into the high voltage hybrid battery pack during the last charge event.
Battery Charging System Indicator Status	Inactive/Waiting/Charging/Complete/Error	Status of the charging system indicator (LEDs/Bulbs/Icons) on the dash of the vehicle.
Proximity Detection Circuit	Volts	The proximity detection circuit is used as a means to detect the presence of the EV Connector, upon initial insertion of the EV Connector into the EV Inlet and before any electrical contact is established, at the point where damage could occur to the Coupler if the vehicle were moved. The means shall provide a signal to activate the vehicle control system and interlock the vehicle drive system.

Contactor Scan Tool Data Parameters

Parameter	Expected Value	Definition
Operating Conditions: Vehicle in Service Mode		
Hybrid/EV Battery Pack Positive Contactor Command	Closed/Open	Serial data command to control the contactor (relay) on the (+) side of the Hybrid/EV Battery pack.
Hybrid/EV Battery		

Pack Negative Contactor Command	Closed/Open	Serial data command to control the contactor (relay) on the (-) side of the Hybrid/EV Battery pack.
Hybrid/EV Battery Pack Precharge Transistor Command	Closed/Open	Serial data command to control the operation of the Hybrid/EV Battery pack precharge transistor. A transistor is a component that amplifies a signal or opens or closes a circuit. Pre-charge of the powerline voltages in a high voltage DC application is a preliminary mode which current-limits the power source such that a controlled rise time of the system voltage during power up is achieved.
Hybrid/EV Battery Pack Multifunction Contactor Command	Closed/Open	Serial data command for the contactor (relay) that has more than one function on the Hybrid/EV Battery pack.
Battery Charging System Positive Contactor Command	Closed/Open	Serial data command to control the contactor (relay) on (+) side of the battery charging system.
Battery Charging System Negative Contactor Command	Closed/Open	Serial data command to control the contactor (relay) on (-) side of the battery charging system.

Hybrid/EV/EV Battery Contactor Scan Tool Data Parameters

Parameter	Expected Value	Definition
Operating Conditions: Vehicle in Service Mode		
Hybrid/EV Battery System Precharge Current Too High	No/Yes	Pre-charge of the powerline voltages in a high voltage DC application is a preliminary mode which current-limits the power source such that a controlled rise time of the system voltage during power up is achieved.
Shutdown Mode	Yes/No	Shutdown Mode is the operational state while the system is turning off. Eg. when a PC is commanded to turn itself off, it takes a while until it actually turns off. In that time it is in Shutdown Mode.
Hybrid/EV Battery System Precharge Time Short	Yes/No	A Control module used to regulate the battery voltage on a hybrid car. (Sometimes uses the acronym BECM). 'Precharge' is a method used to gradually bring the Hybrid/EV Battery circuit up to high voltage without electrical damage to components caused by arching.
Hybrid/EV Battery System Precharge Time Too Long	Yes/No	The time allowed to initially charge a high voltage circuit has not taken too long.
Stuck Open	No/Yes	Symptom description that is displayed behind DTCs. This sub type is used for failures where the ECU does not detect any motion upon commanding the operation of a motor, soleniod, relay, etc., to close some piece of equipment.
Overtemperature	Yes/No	This string is used to describe a Status or Setting. The state of a component when it's heat content is above the normal acceptable range.
Discharging	Yes/No	This string is used to describe a Status or Setting. Indicates a state in which a charge or load is in the process of being relieved
Hybrid/EV Powertrain Control Module Request	Yes/No	Indicates the hybrid system control module is requesting the engine be operated with all cylinders enabled.
Crash Event Detected	Yes/No	This parameter contains a value indicating whether a crash has been detected by the control module.

High Voltage Interlock Circuit	Yes/No	If the cover for the high voltage cables is removed, the interlock ciruit opens the high voltage circuit to make working on the high voltage cables safe.
Airbag Deployed	Yes/No	Indicates the reason the module that controls the movement of the rear closure is not functioning. In this instance it is because the air bag is deployed.

Fuel System Scan Tool Data Parameters

Parameter	Expected Value	Definition
Operating Conditions: Vehicle in Service Mode		
Fuel Tank Pressure	KPa	A sensor used to measure the amount of pressure created in the fuel tank.
Refuel System Status	Off/Waiting/Ready to Refuel/Invalid	The state of the system used while refuelling the vehicle, e.g. tank ventilation.
Refuel Request	Inactive/Active	State of the refuel system request.
Refuel Request Switch	Inactive/Active/Unknown	The switch for the driver to indicate to the refuel system that adding fuel to the vehicle is about to happen.
Refuel System Vent Requested	No/Yes	Indicates if the system that is used when refuelling the vehicle is asked to vent (depressurise) itself.
Refuel System Vented	No/Yes	Indicates if the system that is used when refuelling the vehicle is vented (depressurised).
Service Refuel System Indicator	Off/On	Malfunction indicator (LED, bulb, icon) of the system used for refuelling.
Fuel Door Indicator	Off/On	Indicator (LED, bulb, icon) for the fuel filler door
Fuel Door Position	Open/Closed/Unknown	The state of the fuel filler door (open, closed, unknown)
Fuel Door Lock	Unlocked/Locked/Unknown	The mechanism that secures the fuel filler door.

HVAC System Scan Tool Data Parameters

Parameter	Expected Value	Definition
Operating Conditions: Vehicle in Service Mode		
Electric A/C Compressor Power Request for Hybrid Battery Pack Cooling	kW	This electric power is need by the Electric A/C Compressor motor to cool the Hybrid/EV Battery Pack.
Electric A/C Compressor Power		The power command from the Hybrid Powertrain Control

Command for Hybrid Battery Pack Cooling	kW	Module 2 to the (electric) A/C compressor to provide Hybrid/EV Battery pack cooling.
Electric A/C Compressor Power Request for Passenger Compartment Cooling	kW	Amount of power the A/C compressor has requested from the hybrid battery pack to provide passenger compartment cooling.
Electric A/C Compressor Power Command for Passenger Compartment Cooling	kW	The power command from the Hybrid Powertrain Control Module 2 to the A/C compressor to provide passenger compartment cooling.
A/C Compressor Speed	RPM	Command from HVAC controller on how fast the compressor should run (rpm)
A/C Compressor Clutch Status	Allowed, High Side Pressure Out of Range, Ambient Air Temperature Out of Range, Battery Voltage Out of Range, Coolant Temperature Out of Range, HVAC Blower Off, Engine Off, A/C Not Requested, Low Pressure Switch Open, A/C Evaporator Temperature Sensor Out of Range, Hybrid Electronics Coolant Temperature Out of Range, Transmission Fluid Temperature Out of Range, Error, A/C Compressor Command, Electric A/C Compressor Control Module Malfunction, Control Function Active, A/C Refrigerant High Side Pressure Malfunction, Low Refrigerant Pressure Detected, Engine Overspeed, A/C Evaporator Temperature, Shutdown Mode, A/C Compressor Power Limit, A/C Low Side Pressure, Low Refrigerant Pressure Detected, Engine Overspeed, Shutdown Mode, A/C Compressor Power Limit, A/C Low Side Pressure	This string indicates the state of the air conditioning compressor clutch. A/C clutch which controls the amount of rotation in the compressor which creates the pressure in the system used to create cold air.
A/C Low Side Pressure Sensor	kPa	In a pneumatic or hydraulic system that has a high pressure part and a low pressure part, the pressure of the low side is monitored by this sensor.
A/C Low Side Pressure	Volts	In a pneumatic or hydraulic system that has a high pressure part and a low pressure part, the pressure of

Sensor		the low side is monitored by this sensor.
Ambient Air Temperature	Degrees C	This parameter indicates the temperature of the air surrounding the vehicle.
A/C Compressor Power Limit	No/Yes	Displays the amount of power the A/C compressor is allowed to use in kW.
Passenger Compartment Heater Power Limited	No/Yes	Indicates if the passenger compartment heater power is limited this ignition cycle.
A/C Evaporator Temperature	Degrees C	This indicates the temperature (degrees of heat) of the air conditioning system's evaporator.

Hybrid Powertrain Control Module 2 Scan Tool Data Parameters

Parameter	Expected Value	Definition
Operating Conditions: Vehicle in Service Mode		
Distance With MIL On	km	The accumulated distance driven with the malfunction indicator lamp (MIL) on.
Warm-Ups Since DTC Cleared	Counts	This parameter contains the number of OBD defined warm-up cycles since the last time codes were cleared with a scan tool or, when applicable, with a battery disconnect. A warm up means that the engine started from a cold start condition (which is some calibrated value which is usually around 70 or 80 degrees F) and warms to operating temperature in a single key cycle.
Distance Since DTC Cleared	km	This parameter displays the distance in miles or kilometres since engine control module diagnostic trouble codes (DTCs) have been cleared using the service tool (tech 2 or aftermarket).
Ambient Air Temperature	Degrees C	This parameter indicates the temperature of the air surrounding the vehicle.
Ignition 1 Signal	Volts	This is the name for a circuit between the engine control module and the battery via the ignition switch.
High Voltage System Interlock Circuit	De-Energised/Energised	A low voltage circuit used to provide safety against high voltage exposure. If the low voltage circuit is opened the high voltage circuit will be disabled.
High Voltage System Interlock Circuit Status	Unknown/Pass/Failed	The status (on/off) of the iInterlock circuit used to turn off high voltage circuits to prevent persons from getting hurt in case of service repairs.

Battery Charging System High Voltage Interlock Circuit Status	Unknown/Pass/Fail	The status (on/off) of the interlock circuit that is used by the hybrid battery charging system to turn off high voltage circuits to prevent persons from getting hurt in case of service repairs.
Battery Charging System High Voltage Interlock Circuit	De-energised/Energised	This interlock circuit is used by the hybrid battery charging system to turn off high voltage circuits to prevent persons from getting hurt in case of service repairs.
Isolation Test Resistance	kOhm	The control unit tests the high voltage lines for shorts. This is the resistance to ground that has been detected (is infinite if isolation is OK).
Bonnet Ajar Switch	Open/Closed/Low Voltage/High Voltage/Invalid	This string refers to the electronic device that warns when the engine compartment metal cover is slightly open.
High Voltage System Isolation Test Status	Running/Not Running/Incomplete/Complete	Indication of the diagnostic test status which detects if the High Voltage circuit is electrically isolated from the chassis (ground).
Battery Charging System Isolation Test Status	Passed/Failed	Indication of the diagnostic test status which detects if the Hybrid/EV Battery Charging System is electrically isolated from the chassis (ground).
Hybrid/EV Battery Pack Isolation Test Status	Passed/Failed	Indication of the diagnostic test status which detects if the Hybrid/EV Battery Pack is electrically isolated from the chassis (ground).
Power Mode	Off/Accessory/Run/Crank Request	The state of the electrical system on the vehicle depending on the position of the ignition switch.This indicates the status of the ignition switch.

Temperature Scan Tool Data Parameters

Parameter	Expected Value	Definition
Operating Conditions: Vehicle in Service Mode		
Ambient Air Temperature	Degrees C	This parameter indicates the temperature of the air surrounding the vehicle.
Maximum Hybrid/EV Battery Module Temperature	Degrees C	The Hybrid/EV Battery contains many individual hybrid batteries wired in series. This is the temperature of the Hybrid/EV Battery module with the highest temperature.
Minimum Hybrid/EV Battery Module Temperature	Degrees C	The Hybrid/EV Battery contains many individual hybrid batteries wired in series. This is the temperature of the Hybrid/EV Battery module with the lowest temperature.
Average Hybrid/EV Battery Pack Temperature	Degrees C	Displays an average temperature of the Hybrid/EV Battery obtained from the ECM.
Hybrid/EV Battery Pack Coolant	Degrees C	The first of two sensors used to monitor the temperature of coolant used to maintain Hybrid/EV Battery temperatures is

Temperature Sensor 1		not functioning properly.
Hybrid/EV Battery Pack Coolant Temperature Sensor 2	Degrees C	The second of two sensors used to monitor the temperature of coolant used to maintain Hybrid/EV Battery temperatures is not functioning properly.
Hybrid/EV Battery Pack Coolant Pump Command	%	Serial data command to control the pump motor for the coolant of the Hybrid/EV Battery.
Hybrid/EV Battery Pack Coolant Pump Feedback	%	Measured speed in RPM of the pump for the Hybrid/EV Battery coolant.
Hybrid/EV Battery Pack Coolant Pump Speed	RPM	Hybrid/EV Battery pack coolant pump speed in RPM.
Hybrid/EV Battery Pack Coolant Control Solenoid Valve Command	100%,90%,80%,70%,60%,50%,40%,30%,20%,10%,Normal,Bypass	Serial data command to control the solenoid valve that controls the coolant flow through the Hybrid/EV Battery pack.
Hybrid/EV Battery Pack Coolant Control Solenoid Valve Feedback	100%,90%,80%,70%,60%,50%,40%,30%,20%,10%,Normal,Bypass	Measured position of the solenoid valve.
Hybrid/EV Battery Pack Coolant Control Solenoid Valve Learn Status	Not Run/Running/Complete/Error	Indicates if the learning procedure for the solenoid valve was executed by the control module.
Hybrid/EV Electronics Coolant Temperature	Degrees C	Temperature of the coolant within the hybrid electronics cooling system.
Hybrid/EV Electronics Coolant Pump Command	%	Serial data command to control the pump motor for the coolant of the hybrid electronics.
Hybrid/EV Electronics Coolant Pump Feedback	%	Measured speed of the pump for the coolant of the hybrid powertrain electronics.
Hybrid/EV Electronics Coolant Pump Speed	RPM	Speed of the pump motor for the coolant of the hybrid electronics.
14V Power Module Fan	%	The command to control the speed of the 14V power module fan.
14 Volt Power Module Fan Feedback	%	Measured speed of the fan for the module that supplies 14V.
14V Power Module Fan Speed	RPM	Speed of the cooling fan for the module that supplies 14V.
Hybrid/EV Battery Pack Heater Power Command	kW	Serial data command to control the heater for the Hybrid/EV Battery pack.
Hybrid/EV Battery Pack Heater Power Command	%	Serial data command to control the heater for the Hybrid/EV Battery pack.
Hybrid/EV Battery Pack Heater Power Request	kW	Amount of power the Hybrid/EV Battery pack heater has requested to provide Hybrid/EV Battery pack heating.
Hybrid/EV Battery Pack Heater Power Limited	No/Yes	Inicates if the Hybrid/EV Battery pack heater power is limited this ignition cycle.
		Serial data command to control the solenoid valve that

Passenger Compartment Heater Coolant Control Solenoid Valve Command	%	controls the coolant flow through the heater core for the passenger compartment.
Passenger Compartment Heater Coolant Control Solenoid Valve Feedback	%	Measured position of the solenoid valve that controls the coolant flow through the heater core for the passenger compartment.
Passenger Compartment Heater Coolant Control Solenoid Valve Learn Status	Not Learned/Learned	Status of the passenger compartment heater coolant control solenoid valve learn.
Cooling Fan Motor Command	%	This displays either in percentage or commanded state of the engine cooling fan.

Voltage Scan Tool Data Parameters

Parameter	Expected Value	Definition
Operating Conditions: Vehicle in Service Mode		
High Voltage System Interlock Circuit	De-energised/Energised	A low voltage circuit used to provide safety against high voltage exposure. If the low voltage circuit is opened the high voltage circuit will be disabled.
High Voltage System Interlock Circuit Status	Unknown/Pass/Failed	The status (on/off) of the iInterlock circuit used to turn off high voltage circuits to prevent persons from getting hurt in case of service repairs.
Battery Charging System High Voltage Interlock Circuit Status	Unknown/Pass/Fail	The status (on/off) of the interlock circuit that is used by the hybrid battery charging system to turn off high voltage circuits to prevent persons from getting hurt in case of service repairs.
Battery Charging System High Voltage Interlock Circuit	De-energised/Energised	This interlock circuit is used by the hybrid battery charging system to turn off high voltage circuits to prevent persons from getting hurt in case of service repairs.
Hybrid/EV Battery Pack Voltage	Volts	The electrical potential of the Hybrid/EV Battery.
Minimum Hybrid/EV Battery Module Voltage	Volts	The Hybrid/EV Battery contains many individual hybrid batteries wired in series. The battery energy control module (BECM) measures voltage across the Hybrid/EV Battery modules in pairs. This parameter displays the minimum voltage measured at any of the module pairs during the current ignition cycle.
Hybrid/EV Battery Voltage Sensor with Minimum Value	Sensor Number	Index-number of the Hybrid/EV Battery voltage sensor that is reporting the lowest voltage.
Maximum Hybrid/EV Battery Module Voltage	Volts	This parameter displays the maximum voltage monitored during the current ignition cycle.
Hybrid/EV Battery Voltage Sensor with Maximum Value	Sensor Number	Index-number of the Hybrid/EV Battery voltage sensor that is reporting the highest voltage.
Hybrid/EV Battery Pack	Volts	The Hybrid/EV Battery pack maximum voltage allowed.

Maximum Voltage		
Hybrid/EV Battery Pack Minimum Voltage	Volts	The Hybrid/EV Battery pack minimum voltage allowed.
Hybrid/EV Battery Voltage Sensor Average	Volts	The average voltage of all sensor readings within the Hybrid/EV Battery Pack.
Hybrid/EV Battery Pack State of Charge	%	The available capacity remaining in a Hybrid/EV Battery
Hybrid/EV Battery Pack Minimum State of Charge Limit	%	Minimum permissable Hybrid/EV Battery pack state of charge. The battery must not be discharged below this limit.
Hybrid/EV Battery Pack Maximum State of Charge Limit	%	Indicates the maximum allowed state of charge (%) of the Hybrid/EV Battery pack. (Might be reduced at cold temperatures).
Hybrid/EV Battery Pack State of Charge Gauge	%	The reading on the Hybrid/EV Battery pack state of charge gauge located on the dash of the vehicle.
Hybrid/EV Battery Pack Resistance	Ohms	The Hybrid/EV Battery resistance value in ohms.
Hybrid/EV Battery Pack Current	Amps	This indicates the amount of Hybrid/EV Battery current is in amperage
Hybrid/EV Battery Pack Maximum Discharge Current Limit	Amps	The Hybrid/EV Battery pack highest discharge current allowed.
14V Power Module Power Available From Hybrid/EV Battery Pack	kW	The amount of power (kW) being supplied from the Hybrid/EV Battery Pack to the 14V Power Module.
Hybrid/EV/EV Battery Capacity	Ah	Measures the capacity of the battery

© Copyright Chevrolet. All rights reserved

Inflatable Restraint Passenger Presence System Scan Tool Information

[Sensing and Diagnostic Module Scan Tool Data Parameters]

Parameter	Expected Value	Definition
Operating Conditions: Vehicle in Service Mode		
Base Model Part Number	Varies, 8 Digit Number	The scan tool displays the part number of the PPS module which is stored in non volatile memory.
Battery Voltage	Volts	The scan tool will display battery voltage.
Calibration Part Number	Varies, 8 Digit Number	The scan tool displays the part number of the calibration file in the PPS module.
End Model Part Number	Varies, 8 Digit Number	The scan tool displays the part number of the PPS module in production.
Manufacturer's Traceability Number	Varies, 16 Digit Number	The scan tool displays the 16 digit traceability number in the PPS module.
Passenger Classification	Empty Seat	The scan tool displays Unknown, Calibration Mode, Empty Seat, Small Occupant Type 1, Small Occupant Type 2, Small Occupant Type 3, Small Occupant Type 4, Large Occupant Type 1, Large Occupant Type 2, Large Occupant Type 3, Large Occupant Type 4, Module Setup, Not Available, Child Seat Facing Rearward, Child Seat Facing Forward, Child Seat Facing Unknown Direction. This is the state of what occupies the passenger seat, as monitored by the passenger presence system.
Passenger Presence Module Primary Key	Hex Value	The scan tool indicates the primary key Hex value.
Passenger Presence System Reporting	Yes/No	The PPS module will report if there are DTCs set in the passenger presence module.

DTC(s)		
Passenger Seat Occupancy Status	Empty Seat	The scan tool displays Undefined, Empty Seat, Occupied, or Invalid. This is the state of the passenger seat if it is occupied or empty and monitored by the passenger presence system.
Power Mode	Off / Accessory / Run / Crank Request	The scan tool will display the power mode of the vehicle.
Primary Key Status	Valid/Invalid	The scan tool displays Valid if the primary key matches what is stored to memory in the PPS module.
Received Primary Key	Hex Value	The scan tool displays a Hex value indicating the PPS module received primary key data.
Software Part Number	Varies, 8 Digit Number	The scan tool displays the software part number in the PPS module.

© Copyright Chevrolet. All rights reserved

Inflatable Restraint Sensing and Diagnostic Module Scan Tool Information

[Sensing and Diagnostic Module Scan Tool Data Parameters]

Parameter	Expected Value	Definition
Operating Conditions: Vehicle in Service Mode		
2nd Row Left Seat Belt Reminder Sensor Pad Enable Status	Disabled/Enabled	The scan tool displays if the left rear seat belt reminder sensor pad is enabled to the SDM.
2nd Row Left Seat Belt Reminder Sensor Pad Learn Status	Learned/Not Learned	The scan tool displays Learned or Not Learned. Learned is displayed if the left rear seat belt reminder sensor pad has been learned by the SDM.
2nd Row Left Seat Belt Status	Buckled/Unbuckled	The scan tool displays Buckled or Unbuckled. This is the state of the left rear seat belt switch when the seat belt is buckled or unbuckled.
2nd Row Middle Seat Belt Reminder Sensor Pad Enable Status	Disabled/Enabled	The scan tool displays if the rear middle seat belt reminder sensor pad is enabled to the SDM.
2nd Row Middle Seat Belt Reminder Sensor Pad Learn Status	Learned/Not Learned	The scan tool displays Learned or Not Learned. Learned is displayed if the rear middle seat belt reminder sensor pad has been learned by the SDM.
2nd Row Middle Seat Belt Status	Buckled/Unbuckled	The scan tool displays Buckled or Unbuckled. This is the state of the middle rear seat belt switch when the seat belt is buckled or unbuckled.
2nd Row Middle Seat Belt Reminder Sensor Pad Enable Status	Disabled/Enabled	The scan tool displays if the rear right seat belt reminder sensor pad is enabled to the SDM.
2nd Row Middle Seat Belt Reminder Sensor Pad Learn Status	Learned/Not Learned	The scan tool displays Learned or Not Learned. Learned is displayed if the rear right seat belt reminder sensor pad has been learned by the SDM.
2nd Row Right Seat Belt Status	Buckled/Unbuckled	The scan tool displays Buckled or Unbuckled. This is the state of the right rear seat belt switch when the seat belt is buckled or unbuckled.
Air Bag Malfunction Indicator	On/Off/Flashes	The scan tool will display On or Flashes if there is a problem with the SIR system. Any problems within the SIR system will illuminate the air bag indicator. The indicator will either flash or stay on.
Base Model Part Number	Varies, 8 Digit Number	The scan tool displays the part number of the SDM which is stored in non volatile memory.
Calibration Part Number	Varies, 8 Digit Number	The scan tool displays the part number of the calibration file in the SDM.
Deployment Loop 1-18 Enable Status	Enabled/Disabled	The scan tool displays Enabled or Disabled. This is the status of the air bag or pretensioner.
Deployment Loop 1-18 Learn Status	Learned/Not Learned	The scan tool displays Learned or Not learned. Learned is displayed if the SDM has defined the number loop programmed from an air bag or pretensioner.

Deployment Loop 1-18 Resistance	1.44-4.25 Ohms	The scan tool displays the resistance of the learned loop of the air bag or pretensioner when connected to the SDM.
Deployment Loop 1-18 Type	Varies	The scan tool displays the name of the air bag or pretensioner associated with the loop type 1-18.
Driver Seat Belt Reminder Indicator	On/Off	The scan tool displays On if this indicator is on. If the indicator is on it means the seat belt has not been buckled.
Driver Seat Belt Sensor Enable Status	Enabled/Disabled	The scan tool displays if the seat belt sensor in the seat belt buckle is enabled to the SDM.
Driver Seat Belt Sensor Learn Status	Learned/Not learned	The scan tool displays Learned or Not Learned. Learned is displayed if the driver seat belt sensor has been learned by the SDM.
Driver Seat Belt Status	Buckled/Unbuckled	The scan tool displays Buckled or Unbuckled. This is the state of the driver seat belt switch when the seat belt is buckled or unbuckled.
Driver Seat Position Sensor	Rearward/Forward	The scan tool will display if the driver seat is forward or rearward of the sensor set position.
Driver Seat Position Sensor Enable Status	Enabled/Disabled	The scan tool displays if the seat position sensor is enabled to the SDM.
Driver Seat Position Sensor Learn Status	Learned/Not Learned	The scan tool displays Learned or Not Learned. Learned is displayed if the driver seat position sensor has been learned by the SDM.
End Model Part Number	Varies, 8 Digit Number	The scan tool displays the part number of the SDM in production.
Impact Sensor 1-8 Enable Status	Enabled/Disabled	The scan tool displays Enabled or Disabled This is the status of the impact sensor.
Impact Sensor 1-8 Learn Status	Learned/Not Learned	The scan tool displays Learned or Not learned. Learned is displayed if the SDM has learned and has assigned a number to that impact sensor.
Impact Sensor 1-8 Type	Equipped/Not Equipped	The scan tool displays the name of the impact sensor associated with the type 1-8.
Inflatable Restraint Sensing and Diagnostic Module Primary Key	Hex Value	The scan tool indicates the primary key Hex value.
Manufacturer's Traceability Number	Varies, 16 Digit Number	The scan tool displays the 16 digit traceability number in the SDM.
Module Setup	Incomplete/Complete	The scan tool indicates if the SDM is set up.
Passenger Air Bag Disabled Switch	On/Off	The scan tool displays Off when the customer manually turns the passenger airbag off with this switch.
Passenger Air Bag Off Indicator	On/Off	The scan tool displays Off when the passenger indicator is not illuminated. This indicator is off when the disable switch is in the off position or no one is sitting in the passenger seat.
Passenger Air Bag On Indicator	On/Off	The scan tool displays On when the passenger indicator is illuminated. This indicator is on when the disable switch is in the on position and someone is sitting in the passenger seat.
Passenger Air Bag Status	Enabled/Disabled	The scan tool displays if the passenger air bag is enabled to the SDM.
Passenger Air Bag Disable Indicator Enable Status	Enabled/Disabled	The scan tool displays if the passenger air bag disable indicator is enabled to the SDM.
Passenger Air Bag Disable Indicator Learn Status	Learned/Not Learned	The scan tool displays Learned or Not Learned. Learned is displayed if the SDM has learned the status of the passenger air bag disable indicator.
Passenger Air Bag Disable Switch	Enabled/Disabled	The scan tool displays if the passenger air bag disable switch is enabled to the SDM.

Enable Status		
Passenger Air Bag Disable Switch Learn Status	Learned/Not Learned	The scan tool displays Learned or Not Learned. Learned is displayed if the SDM has learned the status of the passenger air bag disable switch.
Passenger Air Bag Enable Indicator Enable Status	Enabled/Disabled	The scan tool displays if the passenger air bag enable indicator is enabled to the SDM.
Passenger Air Bag Enable Indicator Learn Status	Learned/Not Learned	The scan tool displays Learned or Not Learned. Learned is displayed if the SDM has learned the status of the passenger air bag enable indicator.
Passenger Classification	00-07	The scan tool will display what type of individual is sitting in the passenger seat.
Passenger Presence Detection System Enable Status	Enabled/Disabled	The scan tool displays if the passenger presence system is enabled to the SDM.
Passenger Presence Detection System Learn Status	Learned/Not Learned	The scan tool displays Learned or Not Learned. Learned is displayed if the SDM has learned the passenger presence system.
Passenger Presence Detection System Reporting DTC(s)	Yes/No	The SDM will report if there are DTCs set in the passenger presence module.
Passenger Seat Belt Reminder Indicator	On/Off	The scan tool displays On if this indicator is on. If the indicator is on it means the seat belt has not been buckled.
Passenger Seat Belt Reminder Indicator Enable Status	Disabled/Enabled	The scan tool displays if the passenger seat belt reminder indicator is enabled to the SDM.
Passenger Seat Belt Reminder Indicator Learn Status	Learned/Not Learned	The scan tool displays Learned or Not Learned. Learned is displayed if the passenger seat belt reminder indicator has been learned by the SDM.
Passenger Seat Belt Reminder Sensor Pad Enable Status	Disabled/Enabled	The scan tool displays if the passenger seat belt reminder sensor pad is enabled to the SDM.
Passenger Seat Belt Reminder Sensor Pad Learn Status	Learned/Not Learned	The scan tool displays Learned or Not Learned. Learned is displayed if the passenger seat belt reminder sensor pad has been learned by the SDM.
Passenger Seat Belt Sensor Enable Status	Enabled/Disabled	The scan tool displays if the seat position sensor is enabled to the SDM.
Passenger Seat Belt Sensor Learn Status	Learned/Not learned	The scan tool displays Learned or Not Learned. Learned is displayed if the passenger seat belt sensor has been learned by the SDM.
Passenger Seat Belt Status	Buckled/Unbuckled	The scan tool displays Buckled or Unbuckled. This is the state of the passenger seat belt switch when the seat belt is buckled or unbuckled.
Passenger Seat Occupancy Status	Empty Seat/Occupied	The scan tool displays Occupied if someone is sitting in the passenger seat.
Passenger Seat Position Sensor	Rearward/Forward	The scan tool will display if the passenger seat is forward or rearward of the sensor set position.
Passenger Seat Position Sensor Enable Status	Disabled/Enabled	The scan tool displays if the passenger seat position sensor pad is enabled to the SDM.
Passenger Seat Position Sensor Learn Status	Learned/Not Learned	The scan tool displays Learned or Not Learned. Learned is displayed if the passenger seat position sensor has been learned by the SDM.
	Off/Accessory/Run/Crank	

Power Mode	Request	The scan tool will display the power mode of the vehicle.
Primary Key Status	Valid/Invalid	The scan tool displays Valid if the primary key matches what is stored to memory in the SDM.
Primary Key Status Last Ignition Cycle	Invalid/Valid	The SDM checks to see if the primary key data received is valid.
Received Primary Key	Hex Value	The scan tool displays a Hex value indicating the SDM received primary key data.
Rollover Sensor Enable Status	Disabled/Enabled	The scan tool displays if the rollover sensor is enabled to the SDM.
Rollover Sensor Learn Status	Learn/Unlearn	The scan tool displays Learned or Not Learned. Learned is displayed if the rollover sensor has been learned by the SDM.
Security Code Accepted	Yes/No	The SDM either accepts the security code or it does not. The scan tool displays Yes if the security code has been accepted by the SDM.
Security Code Lockout	Yes/No	The scan tool displays Yes if the SDM has been locked out because of the security code not being accepted.
Security Code Lockout Active Timer	Random Value	The SDM uses a timer before the security code is locked in the SDM.
Security Code Programmed	Yes/No	The scan tool displays Yes if the SDM has been programmed with the security code.
Security Code Programming Counter	Random Value	The SDM uses a counter for the value of the security code programming.
Security Code Reset Counter	Random Value	The SDM uses a counter to reset the value of the security code.
Software Part Number	Varies, 8 Digit Number	The scan tool displays the software part number in the SDM.
Vehicle Identification Number	Varies, 17 Digit Number	The VIN number of the vehicle programmed into the SDM.
VIN Programmed	Yes/No	The scan tool displays Yes if the VIN has been programmed into the SDM.
VIN Programming Counter	Random Value	The SDM uses this counter while programming the VIN.

© Copyright Chevrolet. All rights reserved

Instrument Cluster Scan Tool Information

Table 1: Instrument Cluster Scan Tool Data Parameters
Table 2: Instrument Cluster Scan Tool Output Controls

Instrument Cluster Scan Tool Data Parameters

Parameter	Expected Value	Description
Operating Conditions: Vehicle in Service Mode		
Ambient Air Temperature	15 °C	The scan tool displays outside temperature in °C.
Battery Voltage	12-14 V	The scan tool displays Volts. This is the current battery voltage signal.
Coolant Level Switch	Open	The scan tool displays either Open, Closed, or Not Available.
Driver Information Centre Switch	Active/Inactive	The scan tool displays Active or Inactive. This is the state of the driver information centre reset switch.
Driver Information Centre Switch	Varies	The scan tool displays Volts. This is the current driver information centre switch input voltage.
	Inactive	The scan tool displays either Inactive, Up, Down, or Menu. This is the state of the driver information centre switch.
Engine Speed	Varies	The scan tool displays the engine RPM.
Odometer Lock Status	Active/Inactive	The scan tool displays Active or Inactive. Active means the odometer is locked.
Washer Fluid Level Switch	Open	The scan tool displays either Open, Closed, or Not Available.
Vehicle Speed	Varies	The scan tool displays the vehicle speed.

Instrument Cluster Scan Tool Output Controls

Output Control	Description
All Indicators	This function is used to command all the indicators ON or OFF.
CAN Bus Configuration Learn	This function is used to Reset the source ID for low speed CAN Bus communications.
Driver Information Centre Dimming	This function is used to command the dimming of the driver information display to Increase or Decrease by 10%.
Driver Information Centre Options	This function is used to command the driver information centre buttons using the scan tool.
Driver Information Centre Segments	This function is used to command the driver information centre segments ON and OFF.
Instrument Cluster Gauge Sweep	Since there are no gauges, the instrument cluster will go through a screen test sequence instead of sweeping the gauges.

© Copyright Chevrolet. All rights reserved

Keyless Entry Control Module Scan Tool Information

[Keyless Entry Control Module Scan Tool Data Parameters]

Parameter	Expected Value	Definition
Operating Conditions: Vehicle in Service Mode		
Battery Voltage	V	This parameter indicates the battery voltage as measured at the module
Driver Door Ajar Switch	Active/Inactive	This parameter indicates that the driver door is ajar; it is open, but the safety latch is engaged.
Driver Door Open Switch	Active/Inactive	This parameter indicates that the driver door is more than just ajar, it is open.
Driver Door Unlock Switch	Active/Inactive	This parameter indicates if the driver door is locked or unlocked.
Exterior Driver Door Handle Switch	Active/Inactive	This switch begins the challenge and response to determine if the door should be unlocked. If the vehicle responds correctly to the challenge, the door will be unlocked or unlatched.
Exterior Driver Door Handle Proximity Sensor	Active, Inactive, Fault	This is a capacitive proximity sensor on the exterior of the driver door handle. It allows the user to lock the door by pressing a small rectangle on the outside of the door handle if a key is detected leaving the vehicle.
Passenger Door Open Switch	Active/Inactive	This parameter indicates that the passenger door is more than just ajar, it is open.
Passenger Door Ajar Switch	Active/Inactive	This parameter indicates that the passenger door is ajar; it is open, but the safety latch is engaged.
Exterior Passenger Door Handle Switch	Active/Inactive	This switch begins the challenge and response to determine if the door should be unlocked. If the vehicle responds correctly to the challenge, the door will be unlocked or unlatched.
Exterior Passenger Door Handle Proximity Sensor	Active, Inactive, Fault	This is a capacitive proximity sensor on the exterior of the driver door handle. It allows the user to lock the door by pressing a small rectangle on the outside of the door handle if a key is detected leaving the vehicle.
Left Rear Door Ajar Switch	Active/Inactive	This parameter indicates that the driver's side rear door is ajar; it is open, yet the safety latch is engaged.
Exterior Left Rear Door Handle Switch	Active/Inactive	This switch begins the challenge and response to determine if the door should be unlocked. If the vehicle responds correctly to the challenge, the door will be unlocked or unlatched.
Right Rear Door Ajar Switch	Active/Inactive	This parameter indicates that the passenger's side rear door is ajar; it is open, yet the safety latch is engaged.
Exterior Right Rear Door Handle Switch	Active/Inactive	This switch begins the challenge and response to determine if the door should be unlocked. If the vehicle responds correctly to the challenge, the door will be unlocked or unlatched.
Tailgate Ajar Switch	Active/Not Active	This switch indicates if the rear closure of the vehicle is ajar.
Tailgate Handle Switch	Active/Inactive	This switch begins the challenge and response to determine if the rear closure should be unlatched. If the vehicle responds correctly to the challenge, the rear tailgate will be unlatched.

© Copyright Chevrolet. All rights reserved

Mobile Telephone Control Module Scan Tool Information

Table 1: Mobile Telephone Control Module Scan Tool Data Parameters
Table 2: Mobile Telephone Control Module Scan Tool Output Controls

The mobile telephone control module scan tool data parameters list contains all mobile telephone control module related parameters that are available on the scan tool. The list is arranged in alphabetical order. A given parameter may appear in any one of the data lists.

Mobile Telephone Control Module Scan Tool Data Parameters

Parameter	System State	Expected Value	Description
Operating Conditions: Ignition ON			
Battery Voltage	-	11-14 V	The scan tool displays V. This is the current battery voltage.
Bluetooth Signal Strength	-	0-20 dB	The scan tool displays the wireless devices (Bluetooth) reception field strength.
GSM Signal Strength	-	-113 to -51 dBm	The scan tool displays the Global System for Mobile Communications (GSM) signal strength.
Microphone Signal	-	1-16 V	The scan tool displays the voltage level of the microphone power supply.
Phone Cradle to Vehicle Status	Cradle is connected	Connected	The scan tool displays the different aspects of the cradle status.
	Cradle is not connected	Disconnected	
Phone in Cradle	Phone in cradle	Yes	The scan tool displays the status if a phone is connected in the cradle.
	Phone not in cradle	No	

Mobile Telephone Control Module Scan Tool Output Controls

Output Control	Description
Audio Tone	This output control is used to command the Mobile Telephone Control Module audio tone enable or disable.

© Copyright Chevrolet. All rights reserved

Object Alarm Module Scan Tool Information

Table 1: Parking Assist Control Module Scan Tool Data Parameters
Table 2: Object Alarm Module Scan Tool Output Controls

Parking Assist Control Module Scan Tool Data Parameters

Parameter	System State	Expected Value	Description
Operating Conditions: Vehicle in Service Mode/Engine OFF/Parking Assist ON			
Battery Voltage	-	11-14 V	The scan tool displays V. This is the current battery voltage.
Calculated Gearbox Range	Gearbox in reverse	Reverse	The scan tool displays Park, Reverse, Neutral, Drive or Unknown depending on the state of the commanded gear.
Obstacle Detected	-	No	The scan tool displays Yes or No. Yes is displayed if there is an object within the measuring range of the object sensors.
Park Assist Chime	-	Varies	The scan tool displays On or Off. On is displayed if there is an object within the measuring range of the object sensors.
Park Assist Disable History 1	-	Varies	The scan tool displays None, Manual Disable, Park Brake Applied, Trailer or Other Attached Object, Excessive Speed in Reverse, No or Invalid Sensor Signals, Sensor Disturbance, Sensors Dirty, Sound Signal Return Time Not Plausible. This is the state of the park assist disable history.
Park Assist Disable History 2	-	Varies	The scan tool displays None, Manual Disable, Park Brake Applied, Trailer or Other Attached Object, Excessive Speed in Reverse, No or Invalid Sensor Signals, Sensor Disturbance, Sensors Dirty, Sound Signal Return Time Not Plausible. This is the state of the park assist disable history.
Park Assist Disable History 3	-	Varies	The scan tool displays None, Manual Disable, Park Brake Applied, Trailer or Other Attached Object, Excessive Speed in Reverse, No or Invalid Sensor Signals, Sensor Disturbance, Sensors Dirty, Sound Signal Return Time Not Plausible. This is the state of the park assist disable history.
Park Assist Disable History 4	-	Varies	The scan tool displays None, Manual Disable, Park Brake Applied, Trailer or Other Attached Object, Excessive Speed in Reverse, No or Invalid Sensor Signals, Sensor Disturbance, Sensors Dirty, Sound Signal Return Time Not Plausible. This is the state of the park assist disable history.
Park Assist Disable History 5	-	Varies	The scan tool displays None, Manual Disable, Park Brake Applied, Trailer or Other Attached Object, Excessive Speed in Reverse, No or Invalid Sensor Signals, Sensor Disturbance, Sensors Dirty, Sound Signal Return Time Not Plausible. This is the state of the park assist disable history.

Park Assist Disable History 6	-	Varies	The scan tool displays None, Manual Disable, Park Brake Applied, Trailer or Other Attached Object, Excessive Speed in Reverse, No or Invalid Sensor Signals, Sensor Disturbance, Sensors Dirty, Sound Signal Return Time Not Plausible. This is the state of the park assist disable history.
Park Assist Disable History 7	-	Varies	The scan tool displays None, Manual Disable, Park Brake Applied, Trailer or Other Attached Object, Excessive Speed in Reverse, No or Invalid Sensor Signals, Sensor Disturbance, Sensors Dirty, Sound Signal Return Time Not Plausible. This is the state of the park assist disable history.
Park Assist Sensors	-	On	The scan tool displays On or Off.
Park Assist Sensors Reference Voltage	-	7.3-9.1 V	The scan tool displays V. This is the amount of voltage being sent to the object sensors.
Park Assist Switch	Parking assist switch released	Inactive	The scan tool displays Inactive or Active depending on the parking assist switch state.
	Parking assist switch pressed	Active	
Park Assist Switch LED	Parking assist ON	On	The scan tool displays On or Off. This is the state of the parking assist switch indicator.
	Parking assist OFF	Off	
Park Assist System Status	-	Enabled	The scan tool displays Disabled, Enabled, Inhibited or Failed. This is the state of the parking assist system.
Power Mode	-	Run	The scan tool displays Off, Accessory, Run or Crank. This is the state of the ignition switch.

Object Alarm Module Scan Tool Output Controls

Output Control	Description
Park Assist Switch LED	The object alarm module illuminates the parking assist switch indicator when commanded from the scan tool.

© Copyright Chevrolet. All rights reserved

Power Steering Control Module Scan Tool Information

Table 1: Power Steering Control Module Scan Tool Data Parameters
Table 2: Power Steering Control Module Scan Tool Output Controls

The power steering control module scan tool data parameters list contains all power steering related parameters that are available on the scan tool. The list is arranged in alphabetical order. A given parameter may appear in any one of the data lists.

Power Steering Control Module Scan Tool Data Parameters

Parameter	System State	Expected Value	Description
Operating Conditions: Ignition ON			
Battery Voltage	-	9-16 V	The scan tool displays the current battery voltage.
Ignition Mode	-	On	The scan tool displays On or Off dependent on the current ignition mode.

Power Steering Control Module Scan Tool Output Controls

Output Control	Description
Pressure Control Solenoid Valve	Commands the solenoid valve Increase or Decrease.

© Copyright Chevrolet. All rights reserved

Radio Scan Tool Information

Table 1: Radio Scan Tool Data Parameters
Table 2: Radio Scan Tool Output Controls

Radio Scan Tool Data Parameters

Parameter	Expected Value	Definition
Operating Conditions: Vehicle in Service Mode		
Aerial Module	Enabled	The scan tool displays Enabled or Disabled. This indicates if the system uses an aerial module and the output status between the radio and the aerial module.
Auxiliary Audio Input	Present	The scan tool displays Present or Not Present. This parameter displays active when an auxiliary input is connected.
Battery Voltage	Varies	The scan tool displays volts. This is the voltage at the input to the radio.
Digital Radio Receiver	Present	The scan tool displays Present or Not Present. This is the state of the Digital Audio Broadcast.
Phone Signal	Present	The scan tool displays Present or Not Present. This parameter will display whether this system uses discrete a phone arbitration or not.
Power Mode	Run	The scan tool displays Off, Accessory, Run or Crank Request. This is the power mode radio.
Rear Seat Audio	Not Present	The scan tool displays Present or Not Present. This parameter displays Present if the system detects a rear seat audio module.
Radio Signal Strength	Varies	This displays the signal strength in dB. This is the signal strength of the radio signal.
Theft Lock Armed	Learned VIN	The scan tool displays Learned VIN or No VIN. This is the state of the VIN programming in the radio.
Radio Theft Lock Status	Inactive	The scan tool displays Active or Inactive. This is the state of the theft lock system.
Valet Mode Status	Inactive	The scan tool displays Active or Inactive. This is the state of the valet mode.
Video Display 1	Inactive	The scan tool displays Active or Inactive. When the rear video display 1 is ON, the scan tool will display Active.
Video Display 2	Inactive	The scan tool displays Active or Inactive. When the rear video display 2 is ON, the scan tool will display Active.
End Model Part Number	Varies	The scan tool displays the end model part number.
Boot Software Part Number	Varies	The scan tool displays the boot software ID number.
Calibration Part Number 1	Varies	The scan tool displays the software module ID 1.
Calibration Part Number 2	Varies	The scan tool displays the software module ID 2.
Calibration Part Number 3	Varies	The scan tool displays the software module ID 3

Calibration Part Number 4	Varies	The scan tool displays the software module ID 4.
Calibration Part Number 5	Varies	The scan tool displays the software module ID 5.
Calibration Part Number 6	Varies	The scan tool displays the software module ID 6.
Calibration Part Number 7	Varies	The scan tool displays the software module ID 7.
Calibration Part Number 8	Varies	The scan tool displays the software module ID 8.
Calibration Part Number 9	Varies	The scan tool displays the software module ID 9.
Calibration Part Number 10	Varies	The scan tool displays the software module ID 10.
Calibration Part Number 11	Varies	The scan tool displays the software module ID 11.
Calibration Part Number 12	Varies	The scan tool displays the software module ID 12.
Calibration Part Number 13	Varies	The scan tool displays the software module ID 13.
Calibration Part Number 14	Varies	The scan tool displays the software module ID 14.
Calibration Part Number 15	Varies	The scan tool displays the software module ID 15.
Calibration Part Number 16	Varies	The scan tool displays the software module ID 16.
Vin Digits 2-17	Varies	The scan tool displays the vin digits 2-17.
Digital Radio Receiver ID	Varies	The scan tool displays the Digital Audio Broadcast receiver ID.
DVD Region Code	Varies	The scan tool displays the DVD region code.
DVD Region Code Changes Remaining	Varies	The scan tool displays the number DVD region code changes remaining.

Radio Scan Tool Output Controls

Scan Tool Output Control	Description
Left Front Speaker	This output control is used to command the speaker ON and OFF. Commanding the speaker ON will generate a test tone to be generated through the selected loudspeaker.
Left Rear Speaker	This output control is used to command the speaker ON and OFF. Commanding the speaker ON will generate a test tone to be generated through the selected loudspeaker.
Right Front Speaker	This output control is used to command the speaker ON and OFF. Commanding the speaker ON will generate a test tone to be generated through the selected loudspeaker.
Right Rear Speaker	This output control is used to command the speaker ON and OFF. Commanding the speaker ON will generate a test tone to be generated through the selected loudspeaker.
Centre Speaker	This output control is used to command the speaker ON and OFF. Commanding the speaker ON will generate a test tone to be generated through the selected loudspeaker.
Subwoofer Speaker	This output control is used to command the speaker ON and OFF. Commanding the speaker ON will generate a test tone to be generated through the selected loudspeaker.
Eject	This output is a reset command to eject the disc.
Info Display/Infotainment	

Faceplate Reset	This output is a reset command to reset the radio display.
Info Display/Infotainment Faceplate Wakeup	This output commands a wakeup at the display and the faceplate controls.
Clear Hard Disc Drive	This output commands a HDD to clear all customer data. This includes music files, eBooks and navigation addresses. This does not clear Nav database data.

© Copyright Chevrolet. All rights reserved

Steering Column Lock Control Module Scan Tool Information

Scan Tool Data Parameters

Parameter	Expected Value	Description
Operating Conditions: Ignition ON		
Column Lock Status	Varies	The scan tool displays Failed, Unknown, Locked and Unlocked. The scan tool displays the current state of the column lock.

© Copyright Chevrolet. All rights reserved

Transmission Control Module Scan Tool Information

Table 1: Scan Tool Data Parameters
Table 2: Scan Tool Output Controls

The Transmission Control Module Scan Tool Data List contains all transmission related parameters that are available on the scan tool. The list is arranged in alphabetical order. A given parameter may appear in any one of the data lists, and in some cases may appear more than once, or in more than one data list in order to group certain related parameters together.

The values below represent a typical display recorded from a properly functioning system.

Note: Do not use a scan tool that displays faulty data. Report the condition to the scan tool manufacturer. The use of a faulty scan tool can result in misdiagnosis and the unnecessary replacement of parts.

Only the parameters listed below are used/referenced in this manual for diagnosis. If a scan tool displays other parameters, those values are not recommended by General Motors for use in diagnosis.

If all values are within the expected range described below, refer to Symptoms - Automatic Transmission for diagnosis.

The scan tool values from a properly functioning transmission may be used for comparison with the transmission you are diagnosing. The values below represent a typical display recorded from a properly functioning system.

Scan Tool Data Parameters

Parameter	System State	Expected Value	Description
Operating Conditions: Engine at idle, upper radiator hose hot, closed throttle, transmission in Park, closed loop operation, accessories OFF, brake pedal not applied.			
Calculated Clutch 1 Torque	N·m (lb ft)	-3.7 lb ft	The transmission control module calculates the torque applied to each clutch in the transmission. This parameter displays the calculated torque value for Clutch 1.
Calculated Clutch 2 Torque	N·m (lb ft)	-3.7 lb ft	The transmission control module calculates the torque applied to each clutch in the transmission. This parameter displays the calculated torque value for Clutch 2.
Calculated Clutch 3	N·m (lb ft)	49.9 lb ft	The transmission control module calculates the torque applied to each clutch in the transmission. This parameter displays the calculated torque value for Clutch 3.

Torque			
Calculated Line Pressure	kPa (PSI)	46.4 psi	This parameter indicates the expected real line pressure after accounting for pump loss factors.
Calculated Throttle Position	%	0%	This parameter contains the accelerator effective position, which represents the driver's intended request for torque or acceleration. It is determined from the maximum of the driver requests to open the throttle (e.g., accelerator pedal, cruise control, etc.) and is normalized to 0 to 100%, where 0% represents an idle or coast request and 100% represents a request for wide open throttle (WOT). Calculated throttle position displays a throttle position that is calculated. Meaning idle is 0% (even though the throttle is slightly open at idle) and wide open throttle is 100% (Which may be less than fully open).
Clutch 1 Slip Speed	RPM	0	This parameter represents the clutch slip in RPM for the Variable low and 1-2 reverse clutch (C1) Clutch. When a clutch is engaged it is monitored to see if it is working properly. A clutch is a material which connects (couples) two shafts or other components together when desired. For example: When the clutch is engaged, the event results in both shafts spinning at the same speed. When it is disengaged, one shaft will spin while the other remains stationary. If after engagement they are not spinning at the same speed it is considered slipping.
Clutch 1 Status	Applied / Released	Applied	This parameter represents the clutch status engaged or disengaged. When a clutch is engaged it is monitored to see if it is working properly. A clutch is a material which connects (couples) two shafts or other components together when desired. For example: When the clutch is engaged, the event results in both shafts spinning at the same speed. When it is disengaged, one shaft will spin while the other remains stationary. If after engagement they are not spinning at the same speed it is considered slipping.
Clutch 1 Torque Command	N·m (lb ft)	-3.7 lb ft	This parameter displays the serial data command to control the torque at clutch 1.
Clutch 2 Slip Speed	RPM	-1400 RPM	This parameter represents the clutch slip in RPM for the variable hi and 2-3-4 (C2) Clutch Slip. When a clutch is engaged it is monitored to see if it is working properly. A clutch is a material which connects (couples) two shafts or other components together when desired. For example: When the clutch is engaged, the event results in both shafts spinning at the same speed. When it is disengaged, one shaft will spin while the other remains stationary. If after engagement they are not spinning at the same speed it is considered slipping.
Clutch 2 Status	Applied / Released	Released	This parameter represents the clutch status engaged or disengaged status of the variable hi and 2-3-4 (C2) clutch. When a clutch is engaged it is monitored to see if it is working properly. A clutch is a material which connects (couples) two shafts or other components together when desired. For example: When the clutch is engaged, the event results in both shafts spinning at the same speed. When it is disengaged, one shaft will spin while the other remains stationary.
Clutch 2 Torque Command	N·m (lb ft)	-3.7 lb ft	This parameter displays the serial data command to control the torque at the variable hi and 2-3-4 clutch.
Clutch 3 Slip	RPM	0 RPM	This parameter represents the clutch slip in RPM for the 1-3 reverse clutch assembly (C3) Clutch Slip. When a clutch is engaged it is monitored to see if it is working properly. A clutch is a material which connects (couples) two shafts or other components together when desired. For example: When the clutch is engaged,

Speed			the event results in both shafts spinning at the same speed. When it is disengaged, one shaft will spin while the other remains stationary. If after engagement they are not spinning at the same speed it is considered slipping.
Clutch 3 Status	Applied / Released	Applied	This parameter represents the 1-3 reverse clutch assembly (C3) status engaged or disengaged. When a clutch is engaged it is monitored to see if it is working properly. A clutch is a material which connects (couples) two shafts or other components together when desired. For example: When the clutch is engaged, the event results in both shafts spinning at the same speed. When it is disengaged, one shaft will spin while the other remains stationary.
Clutch 3 Torque Command	N·m (lb ft)	49.4 lb ft	This parameter displays the serial data command to control the torque at 1-3 reverse clutch assembly.
Distance Since DTC Cleared	km / miles	Varies	This parameter displays the distance in miles or kilometres since engine control module diagnostic trouble codes (DTCs) have been cleared using the scan tool.
Distance Since First Malfunction	km / miles	Varies	This parameter displays the distance in miles or kilometres since the time that a failure record was first captured for a diagnostic failure.
Distance Since Last Malfunction	km / miles	Varies	This parameter displays the distance in miles or kilometres since the time that a failure record was last captured for a diagnostic failure.
Distance with MIL On	km / miles	Varies	This parameter displays the accumulated distance driven with the malfunction indicator lamp (MIL) on.
Driver Requested Axle Torque	N·m (lb ft)	-4.4 lb ft	This parameter displays the vehicle operator's requested amount of torque to be provided to the axle. Torque is the measured ability of a rotating element, as of a gear or shaft (axle), to overcome turning resistance.
Engine Coolant Temperature	°C (°F)	83°C (181°F)	This parameter displays the temperature of the engine coolant (fluid used to cool a system by transferring heat away from one part to another).
Engine Speed	RPM	1400 RPM	Indicates the speed of the internal combustion engine in rpm.
Engine torque	N·m (lb ft)	Varies	This parameter displays the amount of torque currently being produced by the engine as a percentage of total available. Torque is the twisting force created in an engine by rotating parts.
High Side Driver 1	On / Off	Enabled	This displays the current state of the high side driver 1 which provides supply voltage to the pressure control solenoids. A solenoid valve which controls fluid pressure to a transmission fluid passage.
High Side Driver 1 Circuit High Voltage Test Status	OK, Malfunction, Not Run	OK	This contains the status of the high voltage test for the shared high side driver circuit. The high side driver is output from the transmission control module that supplies the voltage to the component.

High Side Driver 1 Circuit Low Voltage Test Status	OK, Malfunction, Not Run	OK	This contains the status of the low voltage test for the shared high side driver circuit. The high side driver is output from the computer that supplies the voltage to the control solenoid valve assembly.
High Side Driver 1 Circuit Open Test Status	OK, Malfunction, Not Run	OK	This contains the status of the open test for the shared high side driver circuit. The high side driver is output from the computer that supplies the voltage to the control solenoid valve assembly.
High Side Driver 2	On / Off	Enabled	This displays the current state of the high side driver 2 which is a Power switching device on the positive side.
High Side Driver 2 Circuit High Voltage Test Status	OK, Malfunction, Not Run	Not Run	This contains the status of the high voltage test for the shared high side driver circuit. The high side driver is output from the computer that supplies the voltage to the component.
High Side Driver 2 Circuit Low Voltage Test Status	OK, Malfunction, Not Run	Not Run	This contains the status of the low voltage test for the shared high side driver circuit. The high side driver is output from the computer that supplies the voltage to the component.
High Side Driver 2 Circuit Open Test Status	OK, Malfunction, Not Run	Not Run	This contains the status of the open test for the shared high side driver circuit. The high side driver is output from the computer that supplies the voltage to the component.
Hybrid Transmission Mode	Park/Neutral, Single Electric Motor Dual Electric Motors Single Electric Motor and ICE Dual Electric Motors and ICE, Invalid	Park/Neutral	The actual hybrid transmission mode as detected by the hybrid control module such as Park/Neutral, Single Electric Motor Dual Electric Motors, Single Electric Motor and ICE, Dual Electric Motors and ICE
Hybrid Transmission Mode Command	Park/Neutral, Single Electric Motor Dual Electric Motors Single Electric Motor and ICE Dual Electric Motors and ICE, Invalid	Park/Neutral	This parameter displays the hybrid transmission mode command as sent by the hybrid control module such as Park/Neutral, Single Electric Motor Dual Electric Motors, Single Electric Motor and ICE, Dual Electric Motors and ICE
Ignition Voltage	Volts	14.2 V	This parameter displays the voltage available to the transmission control module on the ignition voltage circuit.

Internal Mode Switch	Park, Reverse, Neutral, Drive (Drive 3), Low (Drive 2), Invalid	Park	This switch indicates transmission range. This is a contact switch attached to the control valve body within the transmission. The 9 outputs from the switch indicate which position is selected by the transmission manual shaft.
Internal Mode Switch A/B/C/P	High / Low	Low/High/High/Low	This displays the position of each internal mode switch state. A/B/C/P are identification for the 4 switches.
Line Pressure Control Solenoid Valve Control Circuit High Voltage Test Status	OK, Malfunction, Not Run	OK	This parameter displays the short to power (high voltage) test status of the control circuit for Line Pressure Solenoid Valve (electro-magnetic valve that can control the flow of fluid in a linear way.) which controls the overall hydraulic pressure of an automatic transmission.
Line Pressure Control Solenoid Valve Control Circuit Low Voltage Test Status	OK, Malfunction, Not Run	OK	This parameter displays the short to ground (Low voltage) test status of the control circuit for the Line Pressure Solenoid Valve (electro-magnetic valve that can control the flow of fluid in a linear way.) which controls the overall hydraulic pressure of an automatic transmission.
Line Pressure Control Solenoid Valve Performance Test Status	OK, Malfunction, Not Run	OK	This parameter displays the performance test status of the Line Pressure Solenoid Valve (electro-magnetic valve that can control the flow of fluid in a linear way.) which controls the overall hydraulic pressure of an automatic transmission.
Line Pressure Control Solenoid Valve Pressure Command	kPa (PSI)	10.7 PSI	This parameter displays the serial data command to control the pressure control solenoid for the main supply line.
Malfunction Counter	Counts	0	This parameter displays the Counts of the number of malfunction occurrences.
Not Run Counter	Counts	0	This parameter displays the counts of the number of situations in which a specific DTC test condition could not be executed to its end.
OSS Supply Voltage	OK, Out of Range	OK	This parameter displays the regulated transmission output shaft speed supply voltage is OK or outside of the normal operating range. Measurements are made by transmission control module.
Output Shaft	Forward/Reverse/Unknown	Unknown	This Parameter indicates the direction of a transmission output shaft rotation. The transmission output shaft

Direction			delivers rotating torque to the drive axles, enabling movement of the vehicle.
Output Speed Sensor Circuit	RPM	0 RPM	This parameter displays the RPM of the output from the transmission to the drive wheels.
Pass Counter	Counts	Varies	This parameter displays the counts of situations in which a specific DTC test condition was successfully executed.
Pressure Control Solenoid Valve 2 Control Circuit High Voltage Test Status	OK, Malfunction, Not Run	OK	This parameter displays the status of the transmission control module test which is testing for high voltage on the pressure control solenoid valve control circuit.
Pressure Control Solenoid Valve 2 Control Circuit Low Voltage Test Status	OK, Malfunction, Not Run	OK	This parameter displays the status of the transmission control module test which is testing for low voltage on the pressure control solenoid valve 2 control circuit.
Pressure Control Solenoid Valve 2 Performance Test Status	OK, Malfunction, Not Run	OK	This parameter displays the status of the transmission control module test of the pressure control solenoid valve 2 functionality.
Pressure Control Solenoid Valve 2 Pressure Command	kPa (PSI)	0 psi	This parameter displays the command in kPa of the transmission control module to the pressure control solenoid valve 2.
Pressure Control Solenoid Valve 3 Control Circuit High Voltage Test Status	OK, Malfunction, Not Run	OK	This parameter displays the status of the transmission control module test which is testing for high voltage on the pressure control solenoid valve 3 control circuit.
Pressure			

Control Solenoid Valve 3 Control Circuit Low Voltage Test Status	OK, Malfunction, Not Run	OK	This parameter displays the status of the transmission control module test which is testing for low voltage on the pressure control solenoid valve 3 control circuit.
Pressure Control Solenoid Valve 3 Performance Test Status	OK, Malfunction, Not Run	OK	This parameter displays the status of the transmission control module test of the pressure control solenoid valve 3 functionality.
Pressure Control Solenoid Valve 3 Pressure Command	kPa (PSI)	0 psi	This parameter displays the command in kPa of the transmission control module to the pressure control solenoid valve 3.
Pressure Control Solenoid Valve 4 Control Circuit High Voltage Test Status	OK, Malfunction, Not Run	OK	This parameter displays the status of the transmission control module test which is testing for high voltage on the pressure control solenoid valve 4 control circuit.
Pressure Control Solenoid Valve 4 Control Circuit Low Voltage Test Status	OK, Malfunction, Not Run	OK	This parameter displays the status of the transmission control module test which is testing for low voltage on the pressure control solenoid valve 4 control circuit.
Pressure Control Solenoid Valve 4 Performance Test Status	OK, Malfunction, Not Run	OK	This parameter displays the status of the transmission control module test of the pressure control solenoid valve 4 functionality.
Pressure Control			

Solenoid Valve 4 Pressure Command	kPa (PSI)	2000 PSI	This parameter displays the command in kPa of the transmission control module to the pressure control solenoid valve 4.
Pressure Control Solenoid Valve 5 Control Circuit High Voltage Test Status	OK, Malfunction, Not Run	OK	This parameter displays the status of the transmission control module test which is testing for high voltage on the pressure control solenoid valve 5 control circuit.
Pressure Control Solenoid Valve 5 Control Circuit Low Voltage Test Status	OK, Malfunction, Not Run	OK	This parameter displays the status of the transmission control module test which is testing for low voltage on the pressure control solenoid valve 5 control circuit.
Pressure Control Solenoid Valve 5 Performance Test Status	OK, Malfunction, Not Run	OK	This parameter displays the status of the transmission control module test of the pressure control solenoid valve 5 functionality.
Pressure Control Solenoid Valve 5 Pressure Command	kPa (PSI)	0.0 psi	This parameter displays the command in kPa of the transmission control module to the pressure control solenoid valve 5.
Replicated Transmission OSS Circuit Open Test Status	OK, Malfunction, Not Run	OK	This parameter displays the status of the transmission control module test which is testing for an open in the transmission output speed circuit. Replicated Transmission Output Shaft Speed is a circuit from the transmission control module to the ECM whose signal has been reproduced (replicated) from the Transmission Output Speed Signal circuit.
Replicated Transmission OSS Signal	On/Off	Off	This parameter displays the Replicated Transmission Output Shaft Speed (Replicated TOS) received from the Transmission Control Module. Replicated Transmission Output Shaft Speed is a circuit from the transmission control module to the ECM whose signal has been reproduced (replicated) from the Transmission Output Speed Signal circuit to the ECM.
Shift Solenoid			

Valve 1	On / Off	On	This parameter displays the command of the transmission control module to the shift solenoid valve 1.
Shift Solenoid Valve 1 Control Circuit High Voltage Test Status	OK, Malfunction, Not Run	OK	This parameter displays the status of the transmission control module test which is testing for high voltage on the shift solenoid valve 1 control circuit.
Shift Solenoid Valve 1 Control Circuit Low Voltage Test Status	OK, Malfunction, Not Run	OK	This parameter displays the status of the transmission control module test which is testing for low voltage on the shift solenoid valve 1 control circuit.
Shift Solenoid Valve 1 Control Circuit Open Test Status	OK, Malfunction, Not Run	OK	This parameter displays the status of the transmission control module test for an open in the shift solenoid valve 1 circuit.
Shift Solenoid Valve 2	On / Off	Off	This parameter displays the command of the transmission control module to the shift solenoid valve 2.
Shift Solenoid Valve 2 Control Circuit High Voltage Test Status	OK, Malfunction, Not Run	OK	This parameter displays the status of the transmission control module test which is testing for high voltage on the shift solenoid valve 2 control circuit.
Shift Solenoid Valve 2 Control Circuit Low Voltage Test Status	OK, Malfunction, Not Run	OK	This parameter displays the status of the transmission control module test which is testing for low voltage on the shift solenoid valve 2 control circuit.
Shift Solenoid Valve 2 Control Circuit Open Test Status	OK, Malfunction, Not Run	OK	This parameter displays the status of the transmission control module test for an open in the shift solenoid valve 2 circuit.
TCM Temperature	°C (°F)	74°C (165°F)	This parameter displays the temperature of the Transmission Control Module.
Transmission Fluid Pressure Switch 1	High / Low	High	This parameter displays the status of the transmission fluid pressure switch 1. An active pressure switch indicates that the associated clutch has been exhausted while an inactive pressure switch indicates that pressure is applied to the associated clutch.

Transmission Fluid Pressure Switch 3	High / Low	High	This parameter displays the status of the transmission fluid pressure switch 3. An active pressure switch indicates that the associated clutch has been exhausted while an inactive pressure switch indicates that pressure is applied to the associated clutch.
Transmission Fluid Pressure Switch 4	High / Low	Low	This parameter displays the status of the transmission fluid pressure switch 4. An active pressure switch indicates that the associated clutch has been exhausted while an inactive pressure switch indicates that pressure is applied to the associated clutch.
Transmission Fluid Pressure Switch 5	High / Low	High	This parameter displays the status of the transmission fluid pressure switch 5. An active pressure switch indicates that the associated clutch has been exhausted while an inactive pressure switch indicates that pressure is applied to the associated clutch.
Transmission Fluid Temperature	°C (°F)	69°C (156°F)	This parameter displays the temperature of the transmission fluid temperature.
Transmission ISS	RPM	1400 RPM	This parameter displays the rotational speed of the transmission input shaft. The scan tool displays input shaft speed in revolutions per minute (RPM).
Transmission OSS	RPM	0	This parameter measures the rotational speed of the transmission output shaft expressed as RPM.
Vehicle Speed	km/h (mph)	0	This parameter displays the rate of vehicle movement in km/h (MPH).
Warm-ups Since DTC Cleared	Counts	Varies	This parameter displays the number of OBD defined warm-up cycles since the last time codes were cleared with a scan tool or, when applicable, with a battery disconnect. A warm up means that the engine started from a cold start condition (which is some calibrated value which is usually around 70 or 80°F) and warms to operating temperature in a single key cycle.
Warm-Ups without Emission Malfunctions	Counts	Varies	The scan tool displays a range of 0-255. This parameter counts the number of warm up cycles without an emission fault present. The counter increments to 255 and rolls back to 0 unless a fault occurs. If a fault occurs, the counter reverts back to 0 until the fault is corrected. Clearing the information with a scan tool or a loss of power to the PCM also resets the counter to 0. The scan tool displays counts. This display indicates the number of warm-up cycles without a emission failure. A warm up means that the engine started from a cold start condition (which is some calibrated value which is usually around 70 or 80°F) and warms to operating temperature in a single key cycle.
Warm-Ups without Non-Emission Malfunctions	Counts	Varies	The scan tool displays a range of 0-255. This parameter counts the number of warm up cycles without a non-emission fault present. The counter increments to 255 and rolls back to 0 unless a fault occurs. If a fault occurs, the counter reverts back to 0 until the fault is corrected. Clearing information with a scan tool or a loss of power to the PCM also resets the counter to 0. A warm up means that the engine started from a cold start condition (which is some calibrated value which is usually around 70 or 80°F) and warms to operating temperature in a single key cycle.

Scan Tool Output Controls

Output Control	Description

Shift Solenoid 1 Shift Solenoid 2	• The TCM commands Shift Solenoid 1 and Shift Solenoid 2 ON and OFF. • When the vehicle is ON, and the engine is OFF, there are no limits to this control. The solenoid remains On until commanded OFF, and vice versa. When the output control is exited, the solenoid state is determined by the TCM. • When the engine is running, the following control limits apply: If the engine is running, the message "Engine Running" appears on the scan tool display.
Line PC Solenoid	• The scan tool is used to request pressure in increments of 207 kPa (30 PSI) from 0-1862 kPa (0-270 PSI). The TCM will then command the solenoid to achieve the requested pressure. • When the vehicle is in Service Mode, the pressure request may be controlled within calibrated limits. There are no limits to the output control when the engine is OFF. • When the engine is running, the following control limits apply: - When the transmission range is Park or Neutral, the pressure request may be controlled within calibrated limits. The engine speed must be less than 1,500 RPM. If the engine speed is greater than 1,500 RPM, the message "TR in park/neutral and engine speed over 1,500 RPM" appears on the scan tool display. - When the transmission range is not Park or Neutral, the requested pressure can only be controlled equal to or greater than the pressure determined by the TCM. The TCM does not allow a pressure to be selected that may cause damage to the transmission. If the requested pressure is less than allowed by the TCM, the message "Requested pressure for the Line PC Solenoid is too low" appears on the scan tool display. - Transmission range DTCs must not be active. If a transmission range DTC is active, the message "Engine running with transmission DTC present" appears on the scan tool display.
PC Solenoid 2 PC Solenoid 3 PC Solenoid 4 PC Solenoid 5	• The TCM commands the pressure control solenoids in order to apply and release the clutches. • The TCM commands the pressure control solenoids. The solenoid remains ON until commanded OFF, and vice versa. When the output control is exited, the solenoid state is determined by the TCM. • When the vehicle is in Service Mode, there are no limits to this control. The solenoid remains ON until commanded OFF, and vice versa. When the output control is exited, the solenoid state is determined by the TCM. • When the engine is running, the following control limits apply: If the engine is running, the message "Engine Running" appears on the scan tool display. • Transmission range DTCs must not be active. If a transmission range DTC is active, the message "Engine running with transmission DTC present" appears on the scan tool display.

&#169© Copyright Chevrolet. All rights reserved

Strategy Based Diagnosis

The goal of Strategy Based Diagnosis is to provide guidance when you create a plan of action for each specific diagnostic situation. Following a similar plan for each diagnostic situation, you will achieve maximum efficiency when you diagnose and repair vehicles. Although each of the Strategy Based Diagnosis boxes is numbered, you are not required to complete every box in order to successfully diagnose a customer concern. The first step of your diagnostic process should always be Understand and Verify the Customer's Concern. The final step of your diagnostic process should be Repair and verify the Fix. Refer to the following chart for the correct Strategy Based Diagnosis.

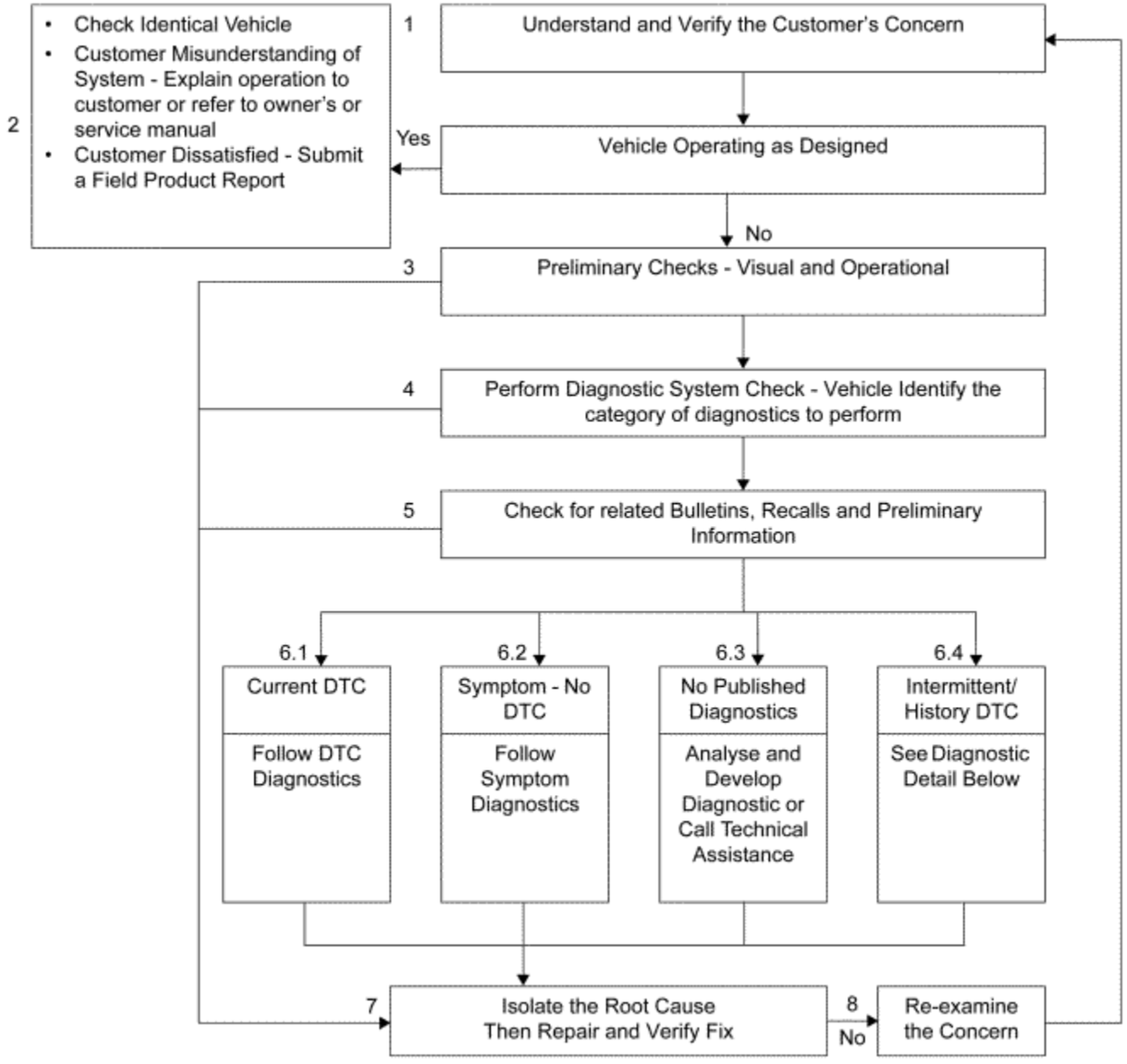

1. Understand and Verify the Customer's Concern: The first part of this step is to obtain as much information as possible from the customer. Are there aftermarket accessories on the vehicle? When does the condition occur? Where does the condition occur? How long does the condition last? How often does the condition occur? In order to verify the concern, the technician should be familiar with the normal operation of the system and refer to the owner or service manual for any information needed.
2. Vehicle Operating as Designed: This condition exists when the vehicle is found to operate normally. The condition described by the customer may be normal. Compare with another like vehicle that is operating normally under the same conditions described by the customer. Explain your findings and the operation of the system to the

customer. If the customer is dissatisfied submit a Field Product Report.

3. Preliminary Checks: Conduct a thorough visual inspection. Review the service history. Detect unusual sounds or odours. Gather diagnostic trouble code (DTC) information in order to achieve an effective repair.
4. Perform Published Diagnostic System Check- Vehicle: The Diagnostic System Check - Vehicle verifies the proper operation of the system. This will lead the technician in an organised approach to diagnostics and identify what category of diagnostic to perform.
5. Check for related Bulletins, Recalls and Preliminary Information (PI).
6. Diagnostic categories:
   6.1. Current DTC: Follow the designated DTC diagnostic in order to make an effective repair. Refer to Diagnostic Trouble Code (DTC) List - Vehicle .
   6.2. Symptom - No DTC: Select the appropriate symptom diagnostic. Follow the diagnostic steps or suggestions in order to complete the repair. Refer to Symptoms - Vehicle .
   6.3. No Published Diagnostics: Analyse the Concern. Develop a plan for the diagnostics. The service manual schematics will help you to see system power, ground, input, and output circuits. You can also identify splices and other areas where multiple circuits are tied together. Look at component locations to see if components, connectors or harnesses may be exposed to extreme temperature, moisture, or corrosives (road salt, battery acid, oil or other fluids). Utilise the wiring diagrams, system description and operation, and system circuit description.
   6.4. Intermittent/History DTC: An intermittent condition is one that does not occur continuously, may be difficult to duplicate, and will only occur when certain conditions are met. Generally, an intermittent is caused by faulty electrical connections and wiring, malfunctioning components, electromagnetic/radio frequency interference, driving conditions, or aftermarket equipment. The following approaches/tools may prove to be beneficial in locating and repairing an intermittent condition or history DTC.
      - Combining technicians knowledge with the available service information.
      - Evaluate the symptoms and conditions described by the customer on the Customer Concern Verification Sheets .
      - Follow the suggestions on Testing for Intermittent Conditions and Poor Connections .
      - Use the available scan tool, digital multi-meter, or J-42598-B with data capturing capabilities.
7. Isolate the Root Cause then Repair and Verify Fix: After isolating the root cause, make the repairs and validate for the correct operation by performing the Diagnostic Repair Verification . Verifying that the DTC or symptom has been corrected may involve road testing the vehicle.
8. Re-examine the Concern: If a technician cannot successfully find or isolate the concern, a re-evaluation is necessary. Re-verify the concern. The concern could be an intermittent or normal condition.

&#169© Copyright Chevrolet. All rights reserved

Diagnostic Procedure Instructions

The following is an overview of instructions for all 16 categories which may be included in a diagnostic procedure.

Diagnostic Instructions

A link to the Diagnostic System Check - Vehicle is provided here. This procedure should be performed prior to performing other diagnostic procedures, as this prevents misdiagnosis where there are integrated system dependencies.

A link to the Strategy Based Diagnosis is provided here. This provides an overview on how a technician should diagnose a vehicle.

A link to the Diagnostic Procedure Instructions is provided here. This information is an overview of instructions for all 16 categories which may be included in a diagnostic procedure.

DTC Descriptor

Describes what DTCs are diagnosed in this procedure. The DTC number, with Symptom Description when applicable, and descriptor are written out.

Diagnostic Fault Information

The diagnostic Fault Information table identifies each circuit that makes up an electrical subsystem and the associated circuit faults. DTCs and symptoms are listed in the table for all circuit fault modes. This information can be used to diagnose an electrical fault, or as a quick visual aid showing how the different symptoms and DTCs apply for the subsystem being diagnosed.

Even though all the DTCs and symptoms are shown in this table it does not mean they will all be diagnosed in the same procedure.

An example table from an engine coolant temperature (ECT) procedure:

Circuit	Short to Ground	Open/High Resistance	Short to Voltage	Signal Performance
ECT Sensor Signal	P0117	P0118	P0118	P0125, P0128
ECT Low Reference	-	P0118	P0118	P0125, P0128

Typical Scan Tool Data

The Typical Scan Tool Data table identifies a scan tool data parameter and its value in reference to potential circuit faults.

An example table from an ECT procedure:

ECT Sensor Temperature – PCM

Circuit	Short to Ground	Open	Short to Voltage
Operating Conditions: Engine Running ***Parameter Normal Range:*** -32 to +130°C (-26 to +275°F)			
ECT Signal	140°C (284°F)	-40°C (-40°F)	-40°C (-40°F)
Low Reference	-	-40°C (-40°F)	-40°C (-40°F)[1]
[1] Internal ECM damage may occur if shorted to B+			

Circuit/System Description

Circuit/System Description identifies how a circuit/system normally functions.

Conditions for Running the DTC

Conditions for Running the DTC, identifies what conditions must be present to allow the diagnostic to run.

Conditions for Setting the DTC

Conditions for Setting the DTC, identifies the condition(s) that must be present in order to fail the diagnostic and when to set the DTC.

Action Taken When the DTC Sets

Actions Taken When the DTC sets, identifies the default actions taken when a control module sets a DTC.

Conditions for Clearing the DTC

Conditions for Clearing the DTC, identifies the conditions that must be met in order to clear the DTC.

Diagnostic Aids

Diagnostic Aids are suggestions which explain other methods to diagnose the condition. It also provides unique information about the system used to assist the technician in finding and repairing a vehicle condition.

Reference Information

Reference Information includes links providing additional information for the diagnostic procedure.

For example:

- Schematic Reference
- Connector End View Reference
- Description and Operation
- Electrical Information Reference
- DTC Type Reference
- Scan Tool Reference
- Special Tools Required

Circuit/System Verification

The diagnostic format does not force a technician to any of the 3 diagnostic categories (Circuit/System Verification, Circuit/System Testing and Component Testing). However, performing the Circuit/System Verification category first, aids in determining if a vehicle condition is current. Some diagnostic categories may state that another category must be performed first when there are testing dependencies.

This category also serves to route the technician to other diagnostic procedures which should be performed first; for example, a DTC with a higher priority.

Circuit/System Verification is a non-intrusive procedure outlining how to verify that a system or a portion of a system is functioning correctly. During the verification process, the vehicle is kept intact and tested as a complete system. This verification is used to assist the technician in determining whether a condition is current or intermittent. When a condition is determined to be intermittent, a technician can use the link in Electrical Information Reference: Testing for Intermittent Conditions and Poor Connections for additional testing information.

The technician should be able to identify if the fault is occurring on the input circuit – signal or on the output circuit – control when applicable. The technician will need to decide from the verification results if the system is working correctly or if further diagnosis needs to be performed in either Circuit/System Testing and/or Component Testing.

To assist the technician in identifying a common part a component code is used. These codes are not translated so they will always be the same even though the part name may have slight variance. The component codes will always be the same once assigned to a unique part name and will be found on the schematics and in the diagnostic procedure categories Circuit/System Verification, Circuit/System Testing, and Component Testing categories.

Component Codes

The component codes used on the schematics will have the base code with an extension to identify location or quantity. For example the ABS wheel speed sensors are identified on the schematic with a base code (B5) and a location extension (LF, RF, LR, and RR) as seen below:

- B5LF Wheel Speed Sensor (WSS)-Left Front
- B5RF Wheel Speed Sensor (WSS)-Right Front

- B5LR Wheel Speed Sensor (WSS)-Left Rear
- B5RR Wheel Speed Sensor (WSS)-Right Rear

B5 is the base code for the wheel speed sensor and the LF, RF, LR, and RR indicate the on vehicle location.

The diagnostic procedures will use the base code (B5) for a wheel speed sensor but may or may not use the extension identifying location (LF, RF, LR, and RR). Example: Ignition OFF, disconnect the harness connector at the appropriate B5 wheel speed sensor. This is done so the diagnostic procedure can be common for all four wheel speed sensors and not have to take into account part location or quantity.

Where the diagnostic states "the appropriate" it is up to the technician to identify which component is being diagnosed by the symptom stated on the RO (drivers door lock is inoperative) or by the DTC descriptor (DTC C0585 04: Left Rear Actuator Circuit Open).

Circuit/System Testing

The diagnostic format does not force a technician to any of the 3 diagnostic categories (Circuit/System Verification, Circuit/System Testing and Component Testing). However, beginning with the Circuit/System Verification category aids in determining if a vehicle condition is current. Some diagnostic categories may state that another category must be performed first when there are testing dependencies.

Circuit/System Testing is a step by step, positive-flow, testing sequence which allows the technician to perform each test step, in sequence, until a fault is detected. If the result of a numbered test step is achieved, the normal flow is to proceed to the next numbered test step (indicated by the down pass arrow). If the result of a numbered test step is NOT achieved, the right repair arrow bullet below the failed test will identify what actions need to take place.

Intrusive diagnostics are performed to locate the system fault. System harness connections are disconnected from the module or component to test individual circuit functions. The module or component will be used to assist in verifying the circuit function. When a test does not pass, the repair steps ( ) will indicate what circuit faults to test for example, short to voltage, short to ground or open/high resistance.

When testing for individual circuit faults, the technician is expected to include terminal inspections such as connection surfaces and terminal tension at both the harness and component/module. Additionally, a technician can use the links in Electrical Information Reference: Testing for Intermittent Conditions and Poor Connections or Circuit Testing for additional information.

The control modules and components will also be diagnosed during these test steps. A retest of a control module or component should always be performed before replacement. For example, re-connect all components and modules and retest the system to verify the condition still exists before replacing modules or components.

Component Testing

The diagnostic format does not force a technician to any of the 3 diagnostic categories (Circuit/System Verification, Circuit/System Testing and Component Testing). However, beginning with the Circuit/System Verification category aids in determining if a vehicle condition is current. Some diagnostic categories may state that another category must be performed first when there are testing dependencies.

Component Testing can offer static and/or dynamic component tests. These tests can be used to verify if a component is operating correctly to avoid unnecessary replacement.

Testing modules in this category will not be offered. In most cases, the module is used to verify the harness circuits in the Circuit/System Testing category and a retest of the module should always be performed before replacement.

Repair Instructions

Repair Instructions provides a link to Diagnostic Repair Verification . This link describes how to verify the vehicle is repaired.

All links to Repair or Replacement procedures are located here.

Repair Verification

Repair Verification describes how to verify the vehicle is repaired when additional instructions are needed beyond what is in Diagnostic Repair Verification.

&#169© Copyright Chevrolet. All rights reserved

Diagnostic System Check Instructions

The following is an overview of instructions for the general information and 14 step System Verification included in the Diagnostic System Check - Vehicle procedure.

Diagnostic Instructions

A link to Strategy Based Diagnosis is provided as an overview on how a technician should diagnose a vehicle.

A link to the Diagnostic System Check Instructions is provided. This provides an overview of instructions and examples for the general information and 14 step System Verification included in the Diagnostic System Check - Vehicle procedure. The examples in this document are intended to give the technician a general idea of what the test step is referring to. They are not intended to list every possible condition or situation.

Diagnostic Systems Check steps are listed by priority to guide the technician to the appropriate diagnostic procedure to correct the customer concern. There are many ways to determine the priority of diagnosing a vehicle concern. Some faults can cause customer perceived symptoms in areas unrelated to the fault. Using an example from the System Check, after reading DTCs, the technician is asked to verify there are no Electronic Control Unit Internal Performance Faults present. It is important that any internal performance issues are addressed prior to continuing through the System Check. There is no benefit addressing other DTCs that could be set due to an internal fault to a control module. If the fault is present, performing the diagnostic procedure for that fault will likely correct the customer perceived concern and possibly eliminate other DTCs that may be set.

Not all steps of the Diagnostic System Check have to be performed. The Diagnostic System Check tries to prioritise the test steps with the highest priority faults first. The technician is then lead to another document to do the actual diagnosis or repair. The strategy is to repair higher level faults that may be the cause of other system or component level symptoms. Additionally, the Diagnostic System Check can only be used for a single fault at a time. If additional faults are present, the technician must perform the diagnostic system check for each concern until all customer concerns are corrected.

Once a repair has been completed, General Motors diagnostic strategy is to always have the technician verify that the customer concern has been corrected. This is to prevent comebacks and to ensure customer satisfaction with their dealership experience. Therefore a link has been provided to Diagnostic Repair Verification procedure for the technician to verify the customer concern has been corrected.

There are some assumptions made when General Motors prepares service information. They include the following areas which are presumed to function as designed:

- The 12 V battery is fully charged. General Motors assumes the majority of vehicles brought in for repair will be able to start and be driven into the service stall. If the vehicle has a dead battery, it is slow cranking or for any other reason the technician feels the customer concern may be battery related, a link is provided to Battery Inspection/Test . This procedure will guide the technician through inspecting and verifying the battery functions properly.
- Fuses should not be open. General Motors does not call out in diagnostic procedures to verify a fuse. The technician is expected to find an open fuse when the diagnostic test step states to check for an open circuit condition. Therefore a link has been provided to Power Distribution Schematics and Electrical Centre Identification Views for technicians to reference power sources and fuse locations if they feel there may be loss of power due to an open fuse condition.

- Ground circuits are clean, tight, and in the correct location. General Motors assumes that the original ground circuits have not been compromised. The technician is expected to find a poor ground connection when the diagnostic test step states to test the ground circuit for an open/high resistance. Therefore a link has been provided to Ground Distribution Schematics and Harness Routing Views for technicians to reference ground locations and which ground circuits may be related to the customer concern.
- All connections/connectors are fully seated. General Motors assumes that all connections are properly installed. The technician is expected to find an open or poor connection when the diagnostic test step asks to test the circuit for an open/high resistance. Therefore a link has been provided to Component Connector End Views for technicians to reference which connections may be related to the customer concern.
- There are no aftermarket devices that affect the operation of the system. General Motors can only author diagnostic and repair information for vehicle systems and components that are original equipment or genuine GM Accessories. Aftermarket equipment can negatively affect original equipment operation and lead a technician's diagnosis of a concern in the wrong direction. Therefore a link has been provided to Checking Aftermarket Accessories that guides a technician through the possible causes of vehicle problems related to aftermarket accessories.
- The scan tool powers up. General Motors assumes that power is available at the Data Link Connector and the scan tool will power on. Therefore a link has been provided to Scan Tool Does Not Power Up if the technician finds that the scan tool does not power on.

Diagnostic System Check

1. VERIFY CUSTOMER CONCERN--This step is to obtain as much information as possible from the customer. Are there aftermarket accessories on the vehicle? When does the condition occur? Where does the condition occur? How long does the condition last? How often does the condition occur? Review the service history of the vehicle for previous repairs that could help diagnose the current concern.

   Now that the technician understands the customer concern, they should validate the concern on the vehicle. In order to verify the concern, the technician should be familiar with the normal operation of the system and refer to the owner or service manual for any information needed. Inspect the visible system components for obvious damage or conditions that could cause the concern. Conduct a thorough visual inspection. Detect unusual sounds or odours.

   The condition described by the customer may be normal. If the technician finds the vehicle to operate normally, compare with another like vehicle that is operating normally, under the same conditions described by the customer. If this is the case, explain your findings and the operation of the system to the customer. If the customer is dissatisfied, submit a Field Product Report.

2. BULLETIN SEARCH--By searching for related bulletins, recall/field actions and preliminary information documents, a procedure for a known field issue may resolve the customer concern with little or no diagnosis necessary saving the technician diagnostic time.
3. MECHANICAL CONCERNS--This step is designed to take the technician directly to a list of symptom diagnostic procedures. The technician is asked to verify the symptoms exhibited by the system are mechanical in nature and not related to an electrical system, see some examples below. If the technician feels the concern could be related to an electrical system, they should continue through the Diagnostic System Check to verify the electrical functionality of vehicle. If the technician feels the concern is exclusively related to a mechanical system, a link to Symptoms - Vehicle is provided to select the appropriate symptom diagnostic procedure for the customer concern.

   Examples:

   - Brake noise or diagnosing irregular pad wear
   - Water leak diagnosis

     Engine or transmission fluid leak diagnosis

-
- Manual window or door lock diagnosis
- Vehicle vibration diagnosis
- Exhaust noise or leak diagnosis

4. VEHICLE POWER UP VERIFICATION--The technician is asked in this step to turn the ignition key ON and verify that the vehicle powers up. The technician should look for clues that multiple vehicle systems are receiving vehicle powermode messages, such as the cluster waking up, the radio powers on, the HVAC blower is operational, windshield wipers turn on, etc, with the key ON. This would be a rare condition as both the powermode master and back-up powermode master would have to be inoperable, however, if the vehicle does not power up, a link to Power Mode Mismatch is provided.
5. CONTROL MODULE COMMUNICATION and DTC CHECK--The technician is asked in this step to record the following three pieces of data on the Repair Order; any control module that the scan tool determined is not communicating, any DTC and symptom byte set current or history, and the control module that has set the DTC.

   This is considered a setup step for the rest of the Diagnostic System Check. The technician is not expected to do anything other than record the three pieces of data provided by the scan tool on the Repair Order. This provides the information needed to complete the rest of the diagnostic system check.

   To complete this step, the technician is asked to utilise the scan tool function called Vehicle DTC Information located in Vehicle Control Systems. This function will query every possible control module on the vehicle requesting all DTCs. During the DTC query, the scan tool will try to establish communication with each control module. If the scan tool can communicate with the control module during the DTC request, it will display PRESENT and provide the number of DTCs set in the control module. If the scan tool cannot communicate with a control module, it will only display NOT COMMUNICATING. Since the scan tool cannot determine if a given control module should be present or not, the technician is asked in a future step to verify that the vehicle was not built with control modules listed as NOT COMMUNICATING.

   If the scan tool cannot establish communications with ALL of the vehicles control modules, a link to Data Link References is provided. A faulty control module or fault with the serial data circuit can cause no communication with all of the control modules on the vehicle. If any control module communicates on the serial data circuit, continue through the Diagnostic System check, as a future step will address any specific non communicating or group of non communicating control modules.

   Once the scan tool has completed the routine, the technician should review each control module that has set a DTC and document them on the Repair Order. When reviewing the DTCs, the technician should take notice if any DTCs are powertrain related, and if so, navigate in the scan tool to the Powertrain area and utilise the Capture Info function. This will upload any Freeze Frame/Failure Records stored in the control module to the scan tool in case the data is lost from the control module. As an example, if the technician commands a Clear DTCs function on a powertrain controller, all diagnostic information stored in the controller is erased. This includes Freeze Frame/Failure Records and Inspection/Maintenance System Status indicators, if required for your region.

6. CONTROL MODULE INTERNAL PERFORMANCE FAULTS--The technician is asked to review the DTCs recorded in step 4 and verify there are no control module internal performance faults set current. This type of fault may be the cause of other symptoms or DTCs displayed by the vehicle. By addressing this fault first, the technician may find the other concerns are resolved. The technician should always follow the diagnostic procedure for these types of faults prior to replacing any control module. If the technician finds a control module has an internal performance fault, a link is provided to Diagnostic Trouble Code (DTC) List - Vehicle to select the appropriate DTC diagnostic procedure.

   Examples:

   - B1000 Electronic Control Unit Performance
   - B101D ECU Hardware Performance

- C0550 Electronic Control Unit Performance
- C056D ECU Hardware Performance
- C0570 Auxiliary Electronic Control Unit Performance
- P0606 Control Module Internal Performance
- P0607 Control Module Performance

7. CONTROL MODULE COMMUNICATION VERIFICATION--This step is used to ensure the control modules that are NOT COMMUNICATING were not built on the vehicle. To understand if the vehicle was built with that option, we provide a link to the Data Link References document where Regular Production Options (RPOs) are listed next to ECU names and can be compared to those the vehicle was built with. If the technician determines that a control that is NOT COMMUNICATING should be present, the technician is asked to follow the appropriate diagnostic procedure listed in the Data Link References document.
8. COMMUNICATION and POWERMODE FAULTS--This step is asking the technician to look for communication DTCs or DTCs related to control modules powering up based on power mode, communication enable or wake-up circuits. See in the below table some examples of the DTCs the technician should diagnose prior to continuing through the Diagnostic System Check. The technician should review the list of DTCs recorded in step 4 and verify that none of these type of DTCs are present. If so, the technician is referred to the Diagnostic Trouble Code (DTC) List - Vehicle to select the appropriate DTC diagnostic procedure.

   Examples:

   - U0140 Lost Communication With Body Control Module
   - U0164 Lost Communication With HVAC Control Module
   - U0170 Lost Communication With Passenger Presence Detection Module
   - U0402 Invalid Data Received From Transmission Control Module
   - U0452 Invalid Data Received From Inflatable Restraint Sensing and Diagnostic Module
   - U1814 Powertrain High Speed Communication Enable Circuit
   - B1428 Ignition Switched Power Run/Crank Relay Circuit
   - B137B Accessory Power Module Wake Up Circuit
   - C0897 Control Module Power Moding
   - P2536 Ignition Accessory Switch Circuit
9. POWER MODE VERIFICATION--This step verifies the Power Mode Master is receiving the proper output state of the push button switch. The technician should use the main power mode input, which is the push button switch. The test should not be performed using a key fob, if the MIL is illuminated the powertrain controller may disable this input. The technician is asked to perform the test with the driver door open. This ensures the retained accessory power mode is inactive during this test which could result in different scan tool readings. The technician is only asked to verify the current Power Mode parameter in the power mode data display list. If the parameter does not match the actual vehicle power mode state, a link is provided to perform the Power Mode Mismatch diagnostic procedure.
10. REMAINING DTC REVIEW--Here the technician is asked to review any remaining DTCs that were not addressed in previous steps. The technician is asked first to verify there are no control module supply voltage, system voltage or 5 V circuit DTCs present. Control modules, systems or components with insufficient or zero voltage can cause one or multiple symptoms to exist on the vehicle. Control module voltage issues could also be the cause of failures during a programming event. The technician should correct voltage issues prior to addressing any programming or configuration DTCs. The technician should then check for any ECU programming, setup or configuration DTCs. By programming software or configuring a control module, the technician could correct the customer concern unobtrusively. The remaining DTCs, which are usually specific system or component faults, are diagnosed last. They can include ECU input and output circuit DTCs or individual circuit faults that

usually cause single symptoms or failure modes on the vehicle and can be fixed following the proper DTC diagnostic procedure. In general, the technician should think about what DTCs or faults could be caused by another DTC or fault. A failed sensor may set a component DTC and then the system may set a DTC indicating the system cannot operate properly. By correcting the sensor fault, the system may now operate properly and the system level DTC will transition to history. Refer to the examples within each category below to understand the differences between these DTCs. If DTCs of these type are current, the technician is referred to Diagnostic Trouble Code (DTC) List - Vehicle to choose the correct DTC diagnostic procedure.

10.1. Voltage DTCs
- B1325 Device Power 1 Circuit
- C0875 Device Voltage Reference Input 2 Circuit
- C1001 Adaptive Cruise Control Indicators Supply Voltage Circuit
- P0641 5 V Reference Circuit
- P0787 Downshift Timing Solenoid Control Circuit Low Voltage

10.2. Programming, Setup, Configuration or Software Performance DTCs
- B3943 Steering Column Lock has Not Learned Column Integration Module
- B101E ECU Software Performance
- B1019 System Configuration Error
- C0558 Calibration Data Not Programmed
- P0630 VIN Not Programmed or Mismatched - Powertrain Control Module (PCM)

10.3. Component related DTCs
- B0013 Driver Frontal Deployment Loop Stage 2
- B0163 Passenger Compartment Temp Sensor Circuit
- C0045 Left Rear Wheel Speed Sensor Circuit
- P0565 Cruise Control Switch Circuit
- P0751 1-2 Shift Solenoid (SS) Valve Performance

10.4. System related DTCs
- B1010 System Sensors Data Mismatch
- C0176 System Thermal Error
- C0561 System Disabled Information Stored
- P1564 Vehicle Acceleration Too High - Cruise Control Disabled
- P1625 Transmission Control Module (TCM) System Reset

10.5. Any other remaining DTCs--The technician should diagnose and correct any other DTCs that are left that were not from the categories above.

11. EMISSION RELATED INSPECTION/MAINTENANCE TESTING CONCERNS--Several regions require that a vehicle pass on-board diagnostic system tests and the inspection/maintenance emission tests in order to renew number plates or vehicle registration. This is accomplished by viewing the Inspection/Maintenance System Status display on a scan tool. Using a scan tool, the technician can observe the Inspection/Maintenance System Status in order to verify that the vehicle meets the criteria that comply with the local area requirements. If inspection and maintenance checks are required in your region, and the customer concern is related to not

passing an Inspection/Maintenance test, a link is provided to Inspection/Maintenance System Check where the technician can choose the appropriate Inspection/Maintenance System Check for the actual engine application being used.

12. SYMPTOM DIAGNOSIS--At this step, the diagnostics are assuming that the only information the technician has available to diagnose the customer concern are symptoms of a problem. There are no DTCs set current or history. There may be a Driver Information Centre display message or a system indicator to aid in identifying the root cause. The technician should evaluate the symptoms and conditions described by the customer and perform the symptoms diagnostics for the area of customer concern. A link is provided to Symptoms - Vehicle which contains a list of all symptoms related to this service manual publication.

&#169© Copyright Chevrolet. All rights reserved

Diagnostic Starting Point - Vehicle

Begin the system diagnosis with Diagnostic System Check - Vehicle . The Diagnostic System Check - Vehicle will provide a complete strategy to locate and repair a mechanical or electrical vehicle fault. Not following this strategy may cause additional diagnostic time and/or misdiagnosis.

The Diagnostic System Check - Vehicle will provide the following strategy:

- When to verify the customer concern and identify related bulletins, recalls and preliminary information
- When to identify a control module that is not communicating, a control module that has set a DTC, and the DTC diagnostic priority
- When to address power mode concerns
- When to verify the engine cranks and runs
- When to diagnose symptom related concerns

&#169© Copyright Chevrolet. All rights reserved

Diagnostic System Check - Vehicle

Diagnostic Instructions

- Review Strategy Based Diagnosis for an overview of the diagnostic approach.
- Diagnostic System Check Instructions provides an overview of each diagnostic category.
- Continue through the Diagnostic System Check until you are directed to follow a particular diagnostic or repair procedure. Once a repair has been completed, perform the Diagnostic Repair Verification and verify the customer concern has been corrected.

The diagnostic procedures within this manual are developed on the assumption that the following areas function as designed:

- The 12 V battery is fully charged and cables are clean and tight. Refer to Battery Inspection/Test .
- Fuses are not open. Refer to Power Distribution Schematics and Electrical Centre Identification Views .
- Ground circuits for the area of customer concern are clean, tight, and in the correct location. Refer to Ground Distribution Schematics and Harness Routing Views .
- All connections/connectors for the area of concern are fully seated. Refer to Component Connector End Views .
- There are no aftermarket devices that affect the operation of the system. Refer to Checking Aftermarket Accessories .
- The scan tool powers up. Refer to Scan Tool Does Not Power Up .

Diagnostic System Check

1. ***VERIFY CUSTOMER CONCERN*** - Understand and validate the customer concern. Inspect the visible system components for obvious damage or conditions that may cause the concern.
2. ***BULLETIN SEARCH*** - Check for related bulletins, recalls/field actions, and preliminary information.
3. ***MECHANICAL CONCERNS*** - Verify the symptom is not exclusively a mechanical concern.
   If the symptom is exclusively a mechanical concern
   Refer to Symptoms - Vehicle .
   If the symptom is not a mechanical concern

   Note: Do not clear any DTCs unless instructed to do so by a diagnostic procedure. If any DTC is Powertrain related, select Capture Info to store DTC and Freeze Frame/Failure Records to the scan tool.

4. ***VEHICLE POWER UP VERIFICATION*** - Vehicle in Service Mode, verify the vehicle powers up.
   If the vehicle does not power up
   Refer to Power Mode Mismatch .

If the vehicle powers up

5. ***CONTROL MODULE COMMUNICATION and DTC CHECK*** - Using a scan tool, perform the Vehicle DTC Information function and verify at least one control module communicates with the scan tool. Record on the Repair Order the following information:
   - Any control module that is not communicating.
   - Any DTC, including symptom byte, and the control module that has set the DTC.

   If the scan tool does not communicate with any control module on the vehicle

   Refer to Data Link References .

   If the scan tool communicates with any control module
6. ***CONTROL MODULE INTERNAL PERFORMANCE FAULTS*** - Verify there is no current control module Internal Performance DTCs set.

   If any DTC of this type is set

   Refer to Diagnostic Trouble Code (DTC) List - Vehicle .

   If no DTC of this type is set
7. ***CONTROL MODULE COMMUNICATION VERIFICATION*** - Verify the vehicle is not built with any control module listed as not communicating with the scan tool; refer to Data Link References .

   If the vehicle is built with a control module that is not communicating

   Refer to Data Link References .

   If all control modules the vehicle is built with are communicating
8. ***COMMUNICATION and POWERMODE FAULTS*** - Verify there are no current control module Power Mode or Communication DTCs set.

   If any DTC of this type is set

   Refer to Diagnostic Trouble Code (DTC) List - Vehicle .

   If no DTC of this type is set

   Note: The electric propulsion system will be active in the vehicle ON state during this test. Ensure the vehicle is out of gear and the handbrake is applied. Turn the vehicle power mode to vehicle OFF as soon as the vehicle ON power mode parameter has been observed.

9. ***POWER MODE VERIFICATION*** - Driver door open, observe the scan tool Power Mode parameter while cycling the push button switch through all the power modes. Verify the current Power Mode parameter matches the actual vehicle power mode states.

   If the Power Mode parameter does not match the vehicle power mode states

   Refer to Power Mode Mismatch .

   If the Power Mode parameter matches the vehicle power mode states
10. ***REMAINING DTC REVIEW*** - Verify there are no other DTCs set.

    If other DTCs are set

    Diagnose them in the order listed below. Refer to Diagnostic Trouble Code (DTC) List - Vehicle .

    10.1. Voltage DTCs
    10.2. Programming, Setup or Configuration or Software Performance DTCs
    10.3. Component related DTCs
    10.4. System related DTCs
    10.5. Any remaining DTCs

If no other DTCs are set

11. ***EMISSION RELATED INSPECTION/MAINTENANCE TESTING CONCERNS*** - If inspection and maintenance checks are required in your region, verify the customer concern is not related to inspection/maintenance testing.

    If the customer concern is related to inspection/maintenance testing

    Refer to Inspection/Maintenance System Check .

    If the customer concern is not related to inspection/maintenance testing

12. ***SYMPTOM DIAGNOSIS*** - Diagnose any remaining customer concern. Refer to Symptoms - Vehicle .

&#169© Copyright Chevrolet. All rights reserved

Powertrain Diagnostic Trouble Code (DTC) Type Definitions

Emissions Related DTCs

Action Taken When the DTC Sets - Type A

- The control module illuminates the malfunction indicator lamp (MIL) when the diagnostic runs and fails.
- The control module records the operating conditions at the time the diagnostic fails. The control module stores this information in the Freeze Frame/Failure Records.

Action Taken When the DTC Sets - Type B

- The control module illuminates the MIL on the second consecutive ignition cycle that the diagnostic runs and fails.
- The control module records the operating conditions at the time the diagnostic fails. The first time the diagnostic fails, the control module stores this information in the Failure Records. If the diagnostic reports a malfunction on the second consecutive ignition cycle, the control module records the operating conditions at the time of the malfunction. The control module writes the operating conditions to the Freeze Frame and updates the Failure Records.
- The following applies to misfire DTCs:
  - If the control module detects a low level or an emission level misfire condition during 2 consecutive trips, the control module illuminates the MIL.
  - If the control module detects a high level or catalyst damaging misfire, the control module flashes the MIL at a rate of once per second.
  - If the control module detects a misfire during 2 non-consecutive trips, the stored conditions are compared with the current conditions. The control module illuminates the MIL when the following conditions occur:
    - The engine load is within 20% of the previous test that failed.
    - The engine speed is within 375 RPM of the previous test that failed.
    - The engine coolant temperature is in the same range of the previous test that failed.
- The following applies to fuel trim DTCs:
  - If the control module detects a fuel trim condition during 2 consecutive trips, the control module illuminates the MIL.
  - If the control module detects a fuel trim condition during 2 non-consecutive trips, the stored conditions are compared with the current conditions. The control module illuminates the MIL when the following conditions occur:
    - The engine load is within 20% of the previous test that failed.
    - The engine speed is within 375 RPM of the previous test that failed.
    - The engine coolant temperature is in the same range of the previous test that failed.

Conditions for Clearing the MIL/DTC - Type A or Type B

- The control module turns OFF the MIL after 4 consecutive ignition cycles that the diagnostic runs and does not fail.
- A current DTC, Last Test Failed, clears when the diagnostic runs and passes.
- A history DTC clears after 40 consecutive warmup cycles, if no malfunctions are reported by this or any other emission related diagnostic.
- Clear the MIL and the DTC with a scan tool.

Non Emissions Related DTCs

Action Taken When the DTC Sets - Type C

- The control module stores the DTC information into memory when the diagnostic runs and fails.
- The MIL will not illuminate.
- The control module records the operating conditions at the time the diagnostic fails. The control module stores this information in the Failure Records.
- The driver information centre, if equipped, may display a message.

Conditions for Clearing the DTC - Type C

- A current DTC Last Test Failed clears when the diagnostic runs and passes.
- A history DTC clears after 40 consecutive warmup cycles, if no malfunctions are reported by this or any other non emission related diagnostic.
- Clear the DTC with a scan tool.

Action Taken When the DTC Sets - Type D

- The control module will take default actions but no DTC will be stored in Failure Records.
- The MIL or SVS will not illuminate.

Conditions for Clearing the DTC - Type D

Clear the DTC with a scan tool.

&#169© Copyright Chevrolet. All rights reserved

Engine Cranks But Does Not Run

Refer to the appropriate diagnostic procedure below for the vehicle being serviced.

Engine Cranks But Does Not Run for the 1.4L (LUU) engine

© Copyright Chevrolet. All rights reserved

Inspection/Maintenance System Check

Refer to the appropriate diagnostic procedure below for the vehicle being served.

Inspection/Maintenance System Check for the 1.4L (LUU) engine

© Copyright Chevrolet. All rights reserved

Diagnostic Repair Verification

Note: After a repair has been made, some DTCs require the ignition to be turned OFF then back ON before the scan tool function will clear the DTC.

1. Ignition OFF.
2. Install any components or connectors that have been removed or replaced during diagnosis.
3. Perform any adjustment, programming or setup procedures that are required when a component or module is removed or replaced.
4. Ignition ON.
5. Clear the DTCs.
6. Turn the ignition OFF for 60 seconds.
7. If the repair was related to a DTC, duplicate the Conditions for Running the DTC and use the Freeze Frame/Failure Records, if applicable, in order to verify the DTC does not reset. If the DTC resets or another DTC is present, refer to the Diagnostic Trouble Code (DTC) List - Vehicle and perform the appropriate diagnostic procedure.

   Or

   If the repair was symptom related, duplicate the conditions under which the customer concern occurred to verify the repair. If the customer concern reoccurs or another symptom is present, return to Symptoms - Vehicle and perform the appropriate symptom diagnostic.

© Copyright Chevrolet. All rights reserved

Fastener Tightening Specifications

Application	Specification	
	Metric	English
Front Wheel Intermediate Shaft Bracket Bolt	58 N·m	43 lb ft
Wheel Drive Shaft Nut		
First Pass	150 N·m	111 lb ft
Second Pass	loosen 45 degrees	
Final Pass	250 N·m	184 lb ft

© Copyright Chevrolet. All rights reserved

Adhesives, Fluids, Lubricants, and Sealers

Application	Type of Material	GM Part Number
Wheel Drive Shaft Inner and Outer Joint	Grease	Refer to Electronic Parts Catalog

© Copyright Chevrolet. All rights reserved

Symptoms - Wheel Drive Shafts

Important: Review the following description prior to beginning the wheel drive shaft diagnosis.

Review the system operation in order to become familiar with the system function. Refer to Wheel Drive Shafts Description and Operation .

Visual/Physical Inspection

- Inspect for aftermarket equipment and modifications which could affect the operation of the wheel drive shafts or other rotating components.
- Inspect the easily accessible or visible system components for obvious damage or conditions which could cause the symptom.
- Thoroughly inspect the entire wheel drive shaft for visible damage, leaking joint seals, and missing seal clamps.
- Inspect the wheel drive shaft seals for cuts, tears, or other damage which may allow the loss of lubricant and the entry of contaminates.

Symptom List

After performing the Visual/Physical Inspection and no visual signs of damage or other interference impairing the wheel drive shaft function is apparent, it may be necessary to remove the wheel drive shaft from the vehicle and manipulate the joints manually. Any binding or otherwise impeded movement of the joints may indicate damage which could contribute to the concern. Refer to the following:

- Click Noise In Turns
- Clunk When Accelerating from Coast
- Clunk Noise When Accelerating During Turns

&#169© Copyright Chevrolet. All rights reserved

Click Noise In Turns

A click noise occuring during turns may be caused by a worn or damaged wheel drive shaft outer joint. This may be more apparent while simultaneously turning and accelerating. This click is caused by wear and/or damage to the constant velocity joint bearings and/or races. Commonly, this damage or wear is caused by the loss of lubricating grease from the constant velocity joint and the entry of foreign material or contaminates.

Carefully inspect the wheel drive shaft seals for cuts, tears or other damage which may allow the lubricating grease to escape. The loss of this grease will cause damage to the wheel drive shaft constant velocity joint in a very short period of time.

If inspection reveals no visual evidence of wear or damage, it may be necessary to remove the wheel drive shaft from the vehicle and manipulate the outer joint manually. Any binding or impeded movement of the joint may indicate damage which could contribute to the concern.

© Copyright Chevrolet. All rights reserved

Clunk When Accelerating from Coast

A clunk noise occurring when accelerating from coast or a standing start may be caused by a worn or damaged wheel drive shaft inner joint. The common cause of wheel drive shaft inner joint damage is the loss of lubricating grease and/or the presence of foreign material and contaminates in the joint. This usually occurs as a result of a torn or damaged inner joint seal.

Carefully inspect the wheel drive shaft seal for cuts, tears or other damage that may allow the loss of the lubricating grease and/or the entry of contaminates.

If inspection reveals no visual evidence of wear or damage, it may be necessary to remove the wheel drive shaft from the vehicle and manipulate the inner joint manually. Do not allow the joint to separate from the wheel drive shaft bar. Any binding or impeded movement of the joint may indicate damage which could contribute to the concern.

© Copyright Chevrolet. All rights reserved

Clunk Noise When Accelerating During Turns

A clunk noise that occurs while accelerating during turns may be caused by wear and/or damage to the inboard and the outboard joints in combination. The loss of lubricant and/or the presence of contaminates can cause damage to the internal components of the joints.

Carefully inspect the joint seals for cuts, tears or other damage. Joint seals that are damaged may allow lubricant leakage and the entry of contaminates.

If inspection reveals no visual evidence of wear or damage, it may be necessary to remove the wheel drive shaft from the vehicle and manipulate the joints manually. Do not allow the joints to separate from the wheel drive shaft bar. Any binding or impeded movement of the joints may indicate damage which could contribute to the concern.

© Copyright Chevrolet. All rights reserved

Front Wheel Drive Intermediate Shaft Replacement

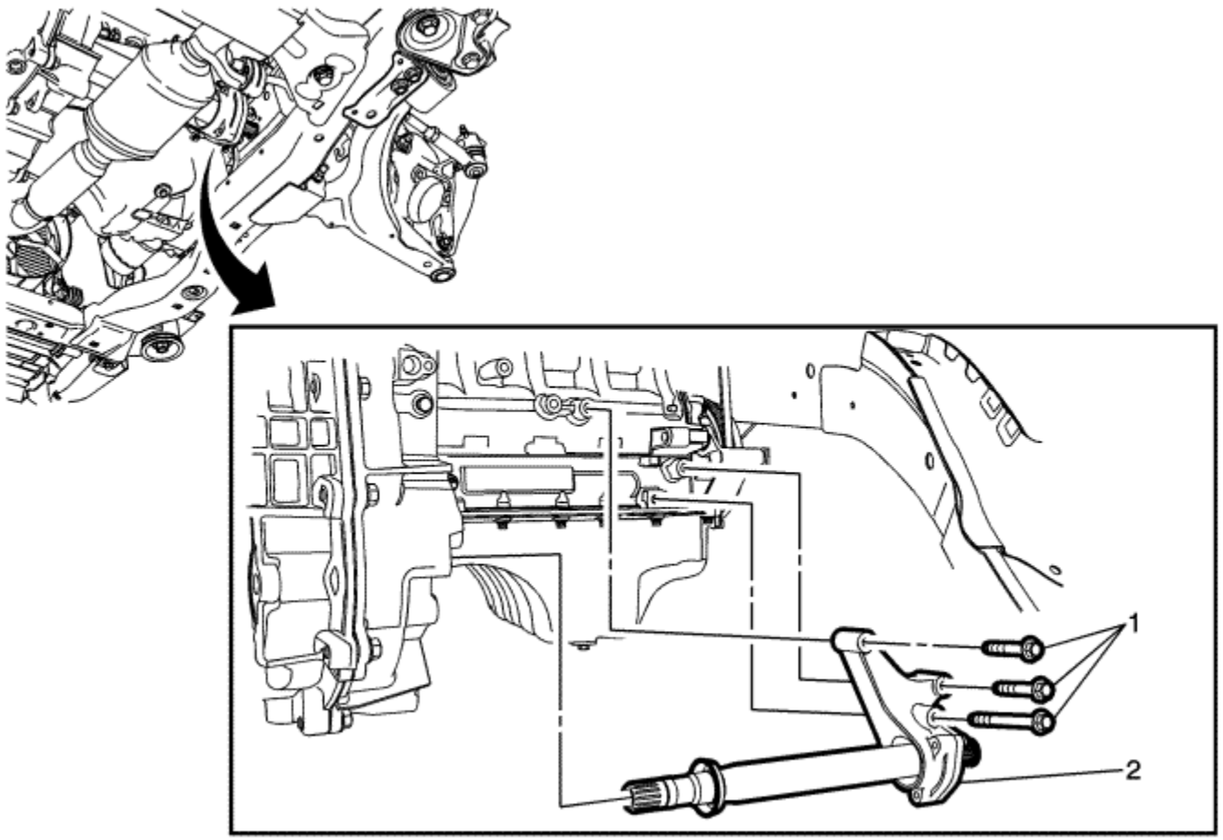

Callout	Component Name
Preliminary Procedure	
1. Raise and support the vehicle. Refer to Lifting and Jacking the Vehicle . 2. Remove the tire and wheel assembly. Refer to Tyre and Wheel Removal and Installation . 3. Remove the wheel drive shaft. Refer to Front Wheel Drive Shaft Replacement .	

1	Front Wheel Drive Intermediate Shaft Bracket Bolt (Qty: 3) **Caution:** Refer to Fastener Caution in the Preface section. **Tighten** 58 N·m (43 lb ft).
2	Front Wheel Drive Intermediate Shaft and Bracket **Procedure** 1. Remove and discard the O-ring. DO NOT re-use, replace with NEW only. 2. Use the *DT 44394-A* protector to install the front wheel drive intermediate shaft. **Special Tools** *DT 44394-A* Seal Protector For equivalent regional tools, refer to Special Tools .

© Copyright Chevrolet. All rights reserved

Front Wheel Drive Shaft Replacement

Special Tools

CH 28733-B Wheel Hub and Drive shaft Remover

For equivalent regional tools, refer to Special Tools

Removal Procedure

1. Raise and support the vehicle. Refer to Lifting and Jacking the Vehicle .
2. Remove the tire and wheel assembly. Refer to Tyre and Wheel Removal and Installation .
3. Remove the front wheelhouse panel splash shield. Refer to Front Wheelhouse Front Liner Replacement .
4. Disconnect the electrical connector for the front wheel speed sensor at the frame.
5. Remove the front wheel speed sensor wiring harness from the front lower control arm.
6. Remove the stabiliser shaft link. Refer to Stabilizer Shaft Link Replacement .

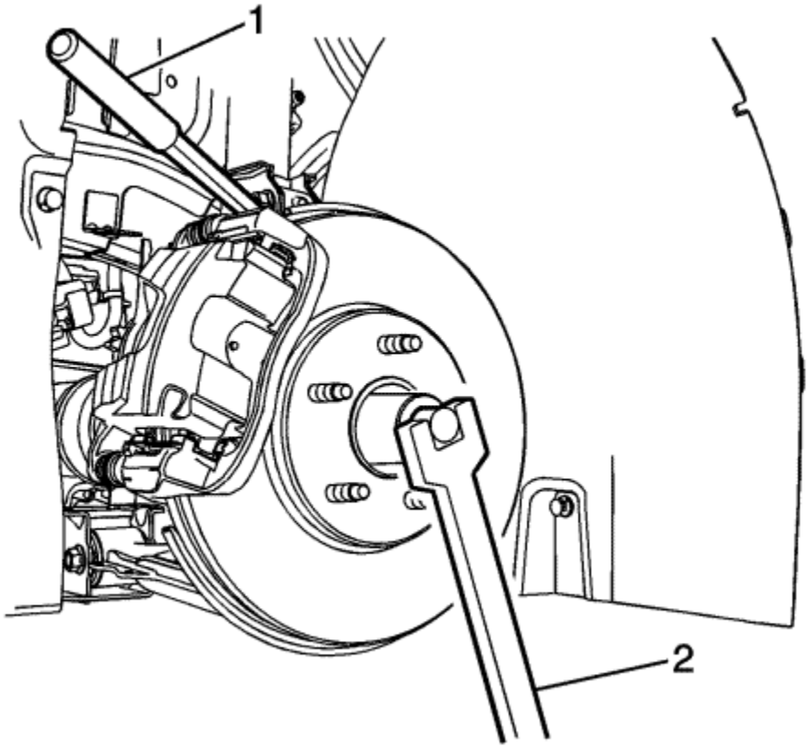

7. Insert a drift or a punch (1) in the brake disc cooling fins.
8. Rotate the brake disc until the drift or punch rests against the brake calliper mounting bracket.
9. Using a breaker bar and the proper size socket (2), loosen the wheel drive shaft nut.

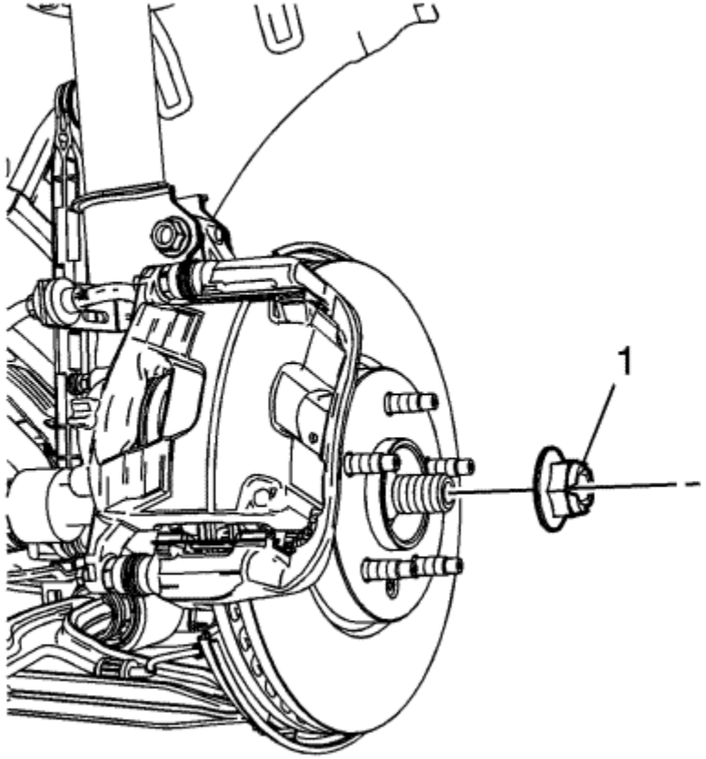

10. Remove and discard the wheel drive shaft nut (1).

11. Using the *CH 28733-B* remover (2), separate the wheel drive shaft from the front wheel hub (1).
12. Remove the outer tie rod end from the knuckle. Refer to Steering Linkage Outer Track rod Replacement .
13. Remove the lower control arm ball joint bolt from the knuckle. Refer to Steering Knuckle Replacement .

    Note: Position a drain pan under the transmission when servicing the left wheel drive shaft.

14. With help from an assistant, move the front knuckle assembly to the side.

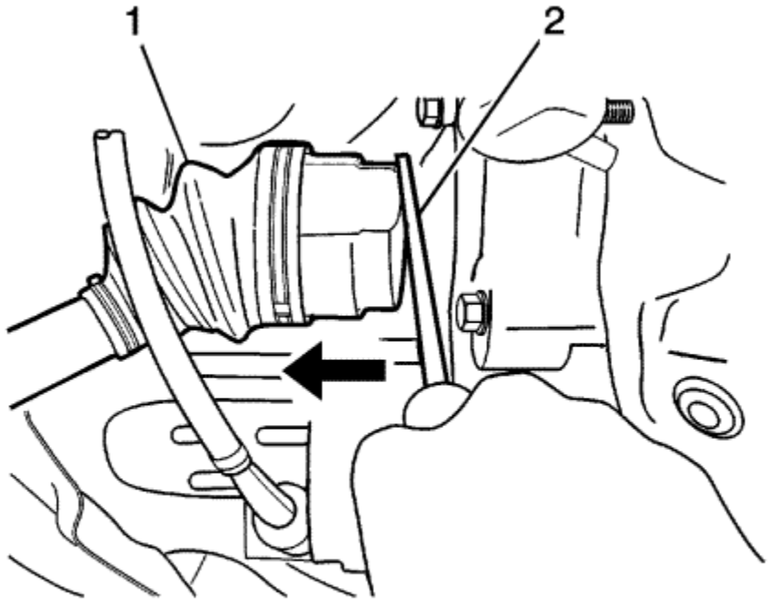

15. Using a large flat bladed screwdriver or pry bar (2), remove the wheel drive shaft (1) from the differential or intermediate shaft.

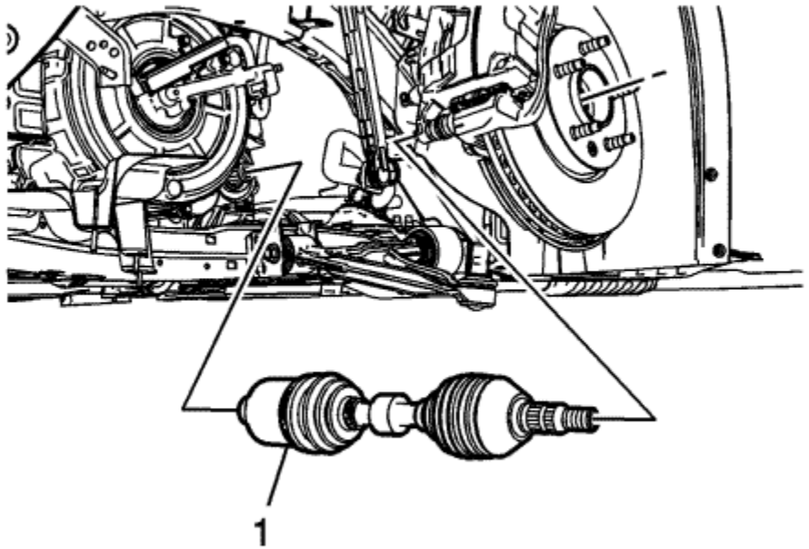

16. Remove the wheel drive shaft from the vehicle.

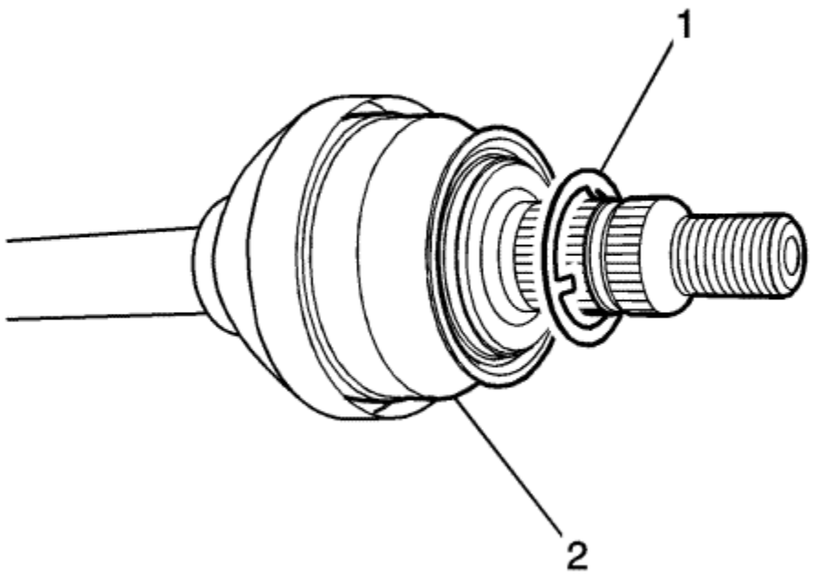

Note: If there is no washer on the wheel drive shaft, install a NEW washer.

17. Remove and discard the washer (1) from the front wheel drive shaft (2). DO NOT re-use the washer, replace with NEW only.

Installation Procedure

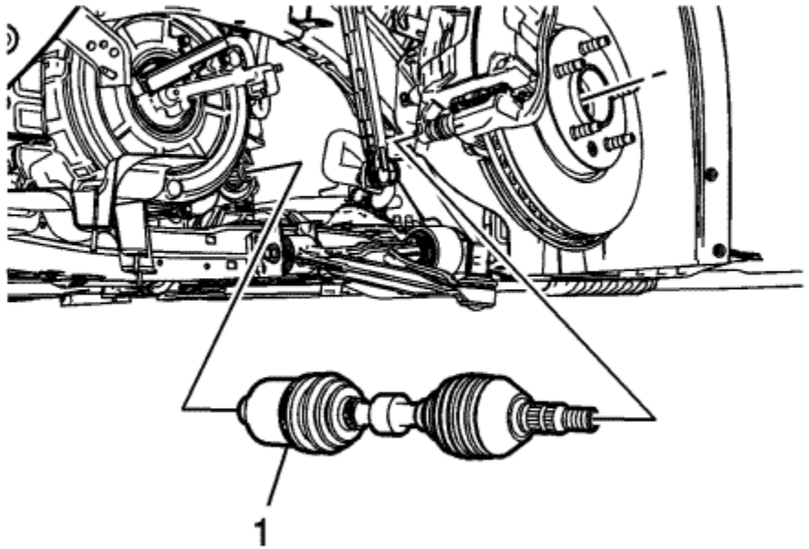

1. With the NEW washers installed, position the wheel drive shaft (1) in the vehicle.
2. With help from an assistant, move the front knuckle assembly into the proper position.
3. Install the wheel drive shaft in the front wheel hub.
4. Install the lower control arm ball joint bolt. Refer to Steering Knuckle Replacement .
5. Install the outer tie rod end. Refer to Steering Linkage Outer Track rod Replacement .
6. Install the stabiliser shaft link. Refer to Stabilizer Shaft Link Replacement .

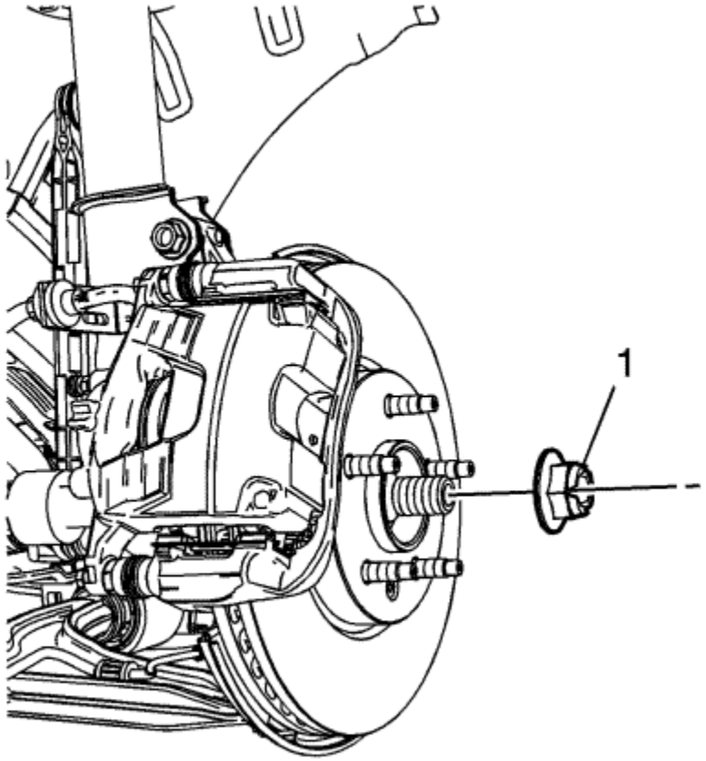

7. Install wheel drive shaft nut (1), hand-tighten

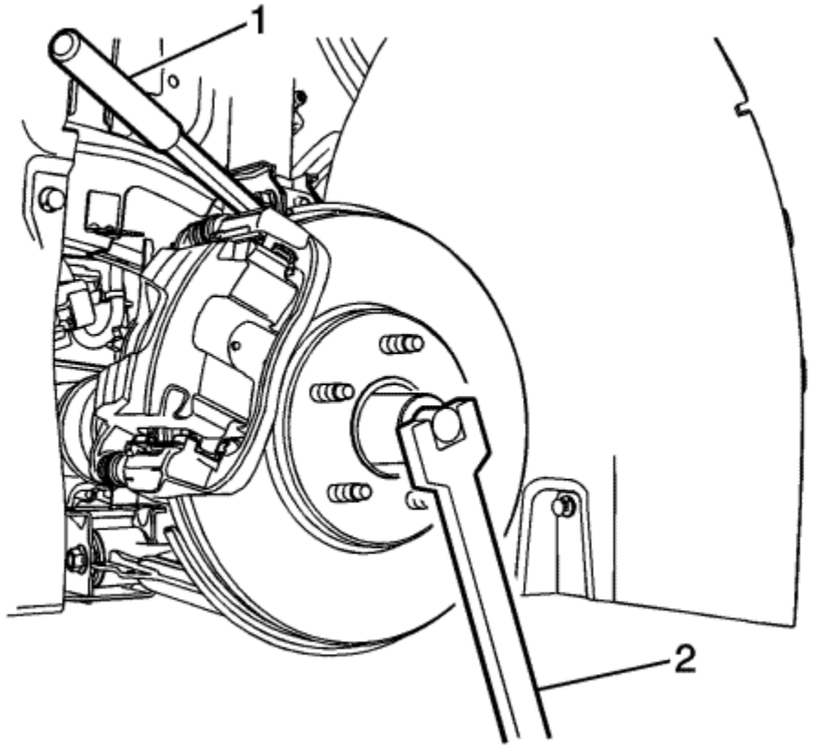

8. Insert a drift or a punch (1) in the brake cooling fin.
9. Rotate the brake disc until the drift or the punch rests against the brake calliper mounting bracket.
10. Using a torque wrench (2) tighten the wheel drive shaft nut to:
    - First Pass, **150 N·m (111 lb ft)**
    - Second Pass, **Loosen the nut 45 degrees**
    - Final Pass, **250 N·m (185 lb ft)**
11. Reconnect the electrical connector for the front wheel speed sensor.
12. Install the front wheel speed sensor wiring harness.
13. Install the front wheelhouse panel splash shield. Refer to Front Wheelhouse Front Liner Replacement .
14. Install the tire and wheel assembly. Refer to Tyre and Wheel Removal and Installation .
15. Lower the vehicle.
16. Check the fluid level of the transmission. Refer to Transmission Fluid Level and Condition Check .

&#169© Copyright Chevrolet. All rights reserved

Front Wheel Drive Shaft Inner Joint Boot Replacement

Special Tools

DT 35910 Drive Axle Seal Clamp Pliers

For equivalent regional tools, refer to Special Tools

Disassemble Procedure

1. Remove the wheel drive shaft from the vehicle. Refer to Front Wheel Drive Shaft Replacement .

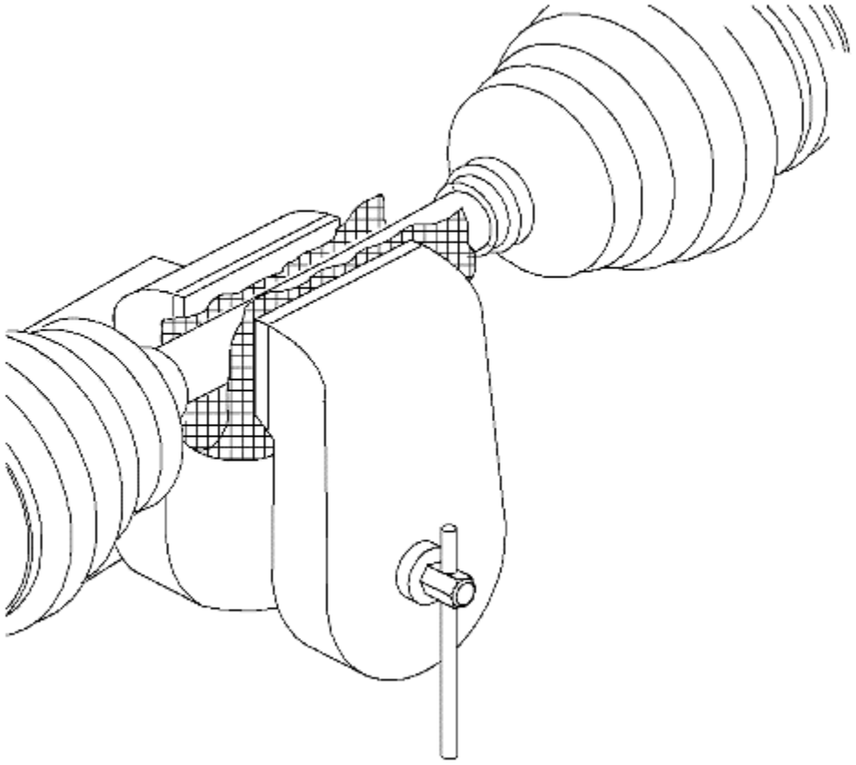

2. Install the wheel drive shaft in a soft-jawed vise.

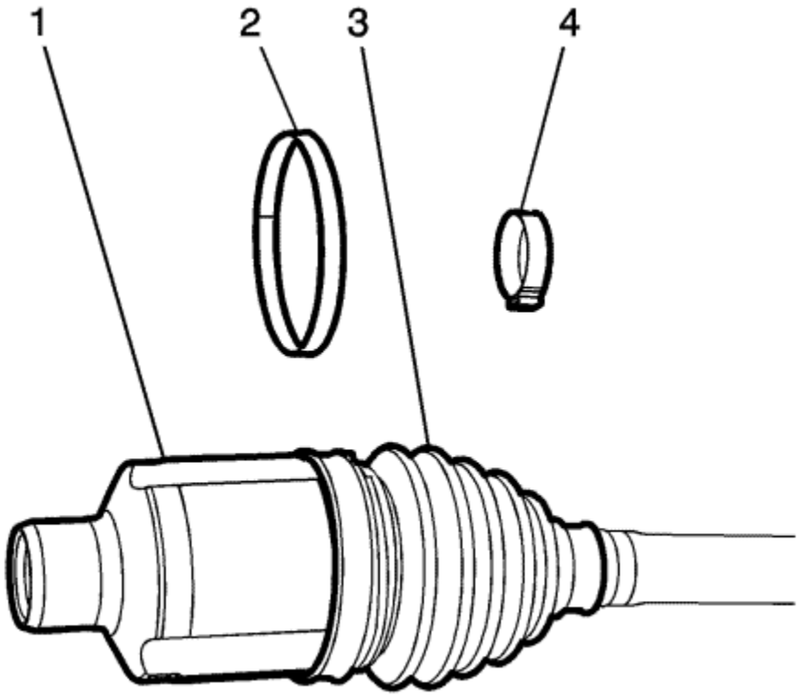

3. Using a pair of side cutters, remove and discard the small boot clamp (4) from the boot (3).
4. Using the appropriate tool, remove and discard the large boot clamp (2) from the boot (3).

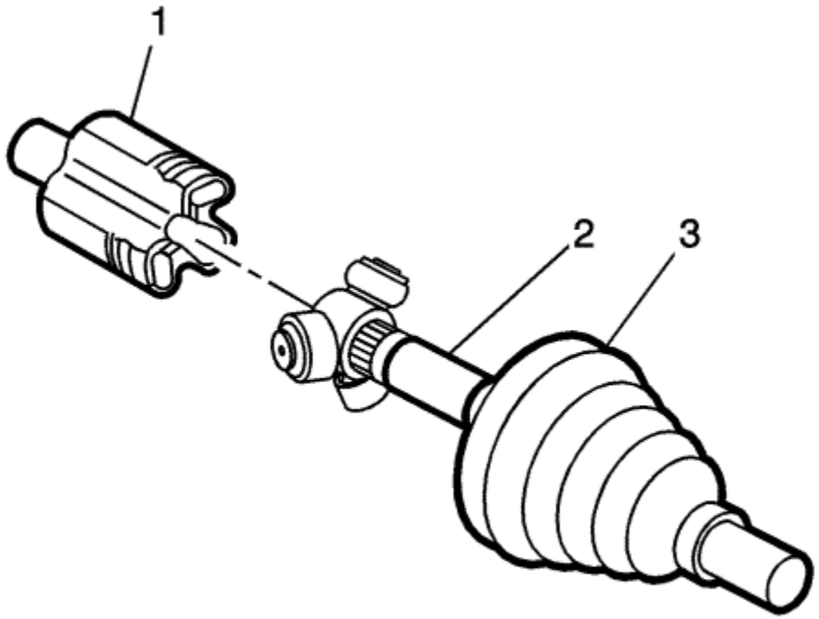

5. Remove the boot (3) from the tripot housing (1).
6. Remove the inner tripot housing (1) from the wheel drive shaft and the tripot (2).

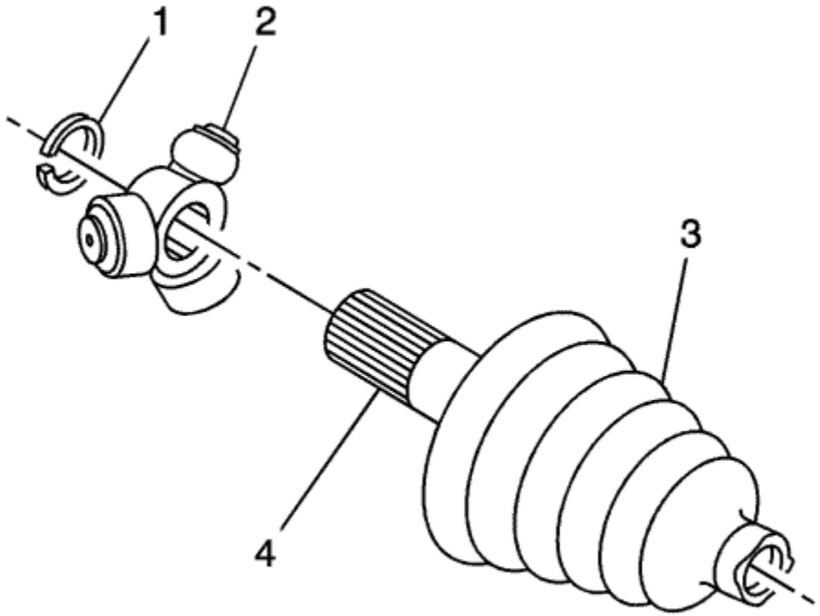

7. Using the appropriate tool, remove the tripot spider retaining ring (1) from the wheel drive shaft (4).
8. Remove the tripot spider (2) from the wheel drive shaft (4).
9. Remove the wheel drive shaft boot (3) from the wheel drive shaft (4).

   Note: If there is any sign of damage or excessive wear, replace the wheel drive shaft as an assembly. There are no service parts available for the inner joint assembly.

10. Inspect the wheel drive shaft inner joint.

Assemble Procedure

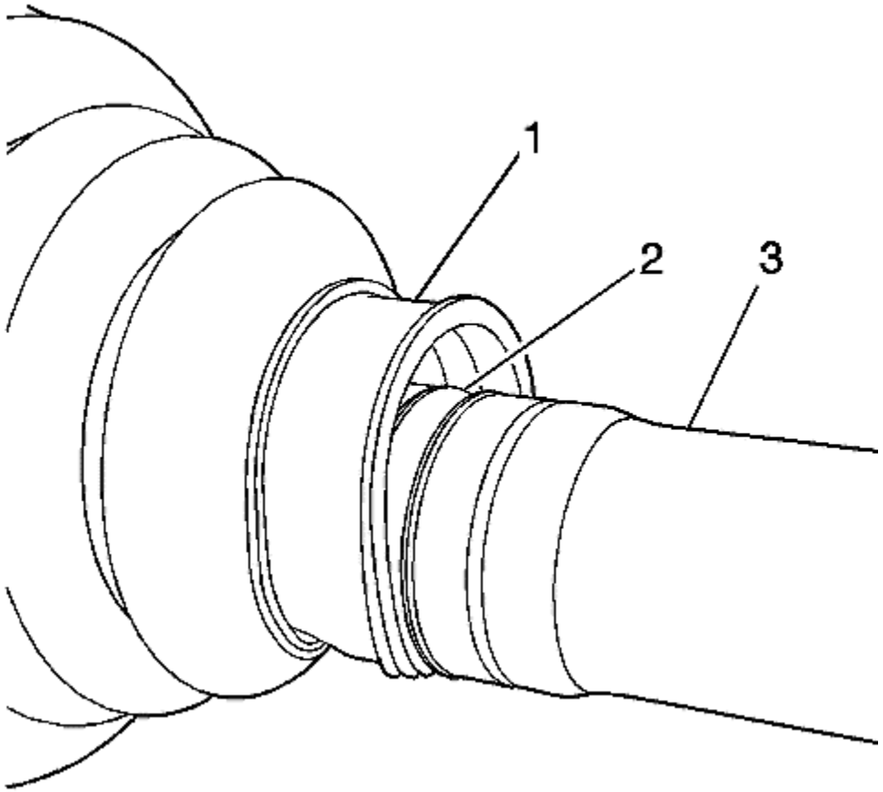

1. Install the boot and the boot clamp (1) on the wheel drive shaft (3).
2. Ensure that the boot (1) is properly seated in the groove (2) in the wheel drive shaft.

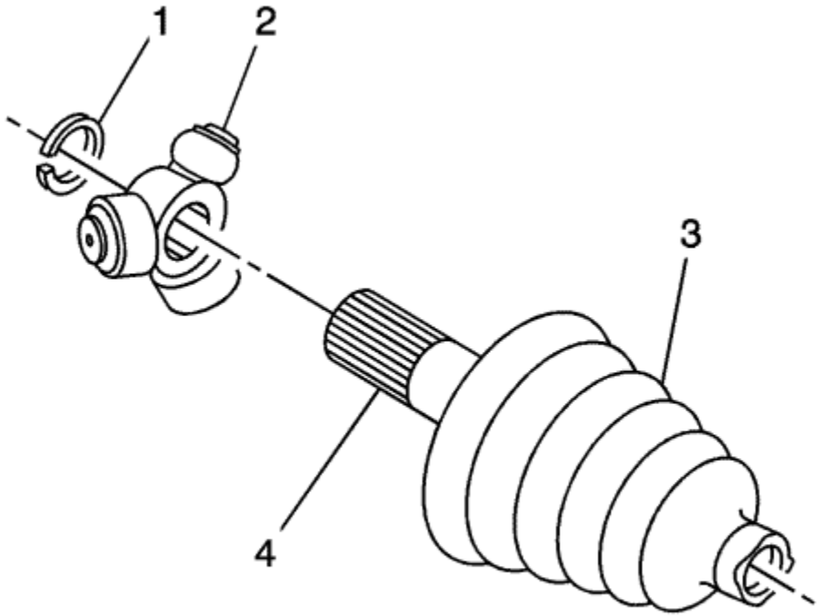

3. Install the tripot spider (2) until just touches the shoulder on the wheel drive shaft (4).
4. Using the appropriate tool, install the outer tripot spider retaining ring (1).

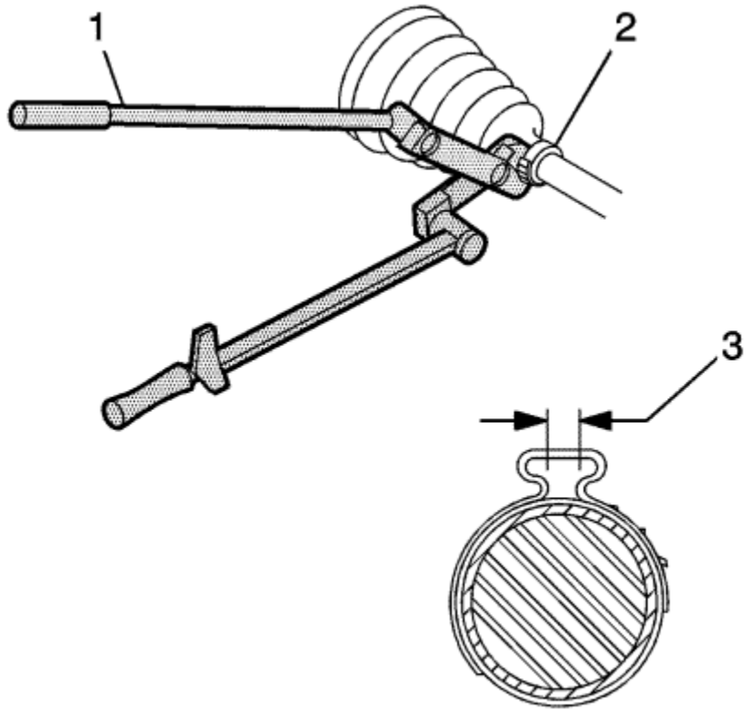

5. Using the *DT 35910* pliers (1), close the boot clamp (2) until the gap (3) measures **1.6 mm (0.06 in)**.

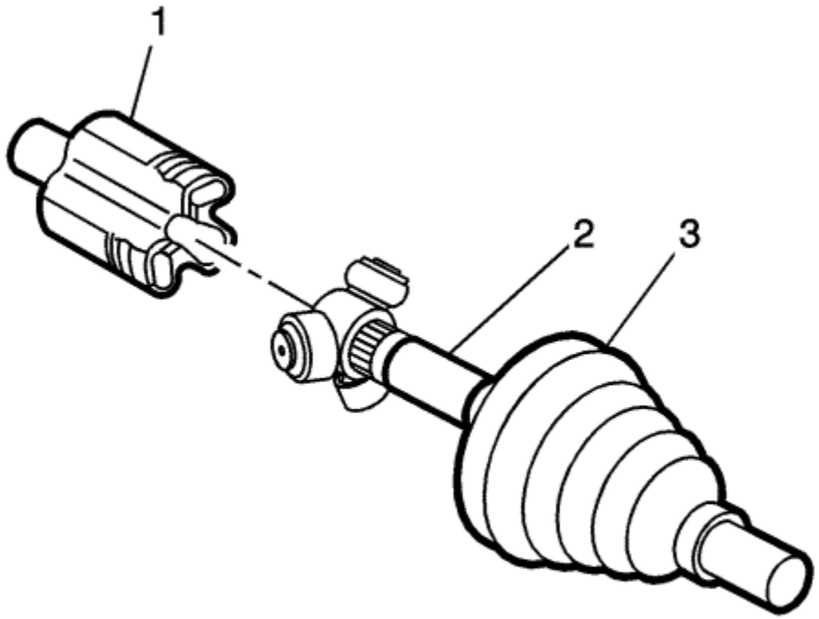

6. Install the tripot housing (1) on the wheel drive shaft (2).
7. Install the wheel drive shaft boot (3) on the tripot housing (1).
8. Place approximately **160 grams (5.7 ounces)** of the lubricant in the boot and the remaining half in the tripot housing. Refer to Adhesives, Fluids, Lubricants, and Sealers .

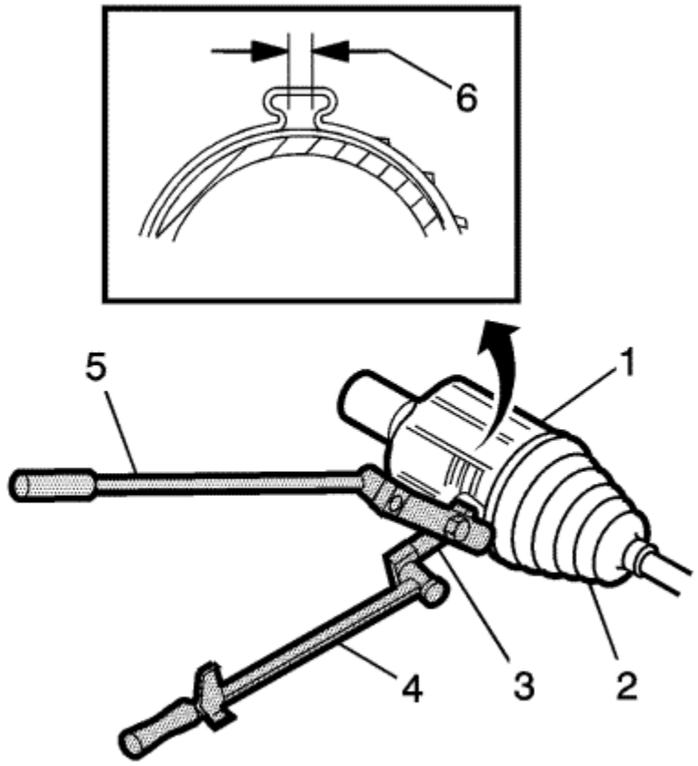

9. Using the *J 35910* pliers (3), ratchet wrench (4) and a breaker bar (5), close the boot clamp (1) until the gap (6) measures **2.0 mm (0.07 in)**.
10. Remove any excess lubricant from the tripot housing and wheel drive shaft.
11. Move the tripot joint housing in a circular motion to distribute the lubricant in the tripot housing.
12. Remove the wheel drive shaft from the vice.
13. Install the wheel drive shaft in the vehicle. Refer to Front Wheel Drive Shaft Replacement .

© Copyright Chevrolet. All rights reserved

Front Wheel Drive Shaft Outer Joint Boot Replacement

Special Tools

- *DT-35910* Drive Axle Seal Clamp Pliers
- *GE-396* Snap Ring Pliers

For equivalent regional tool, refer to Special Tools .

Disassemble Procedure

1. Remove the wheel drive shaft from the vehicle. Refer to Front Wheel Drive Shaft Replacement .

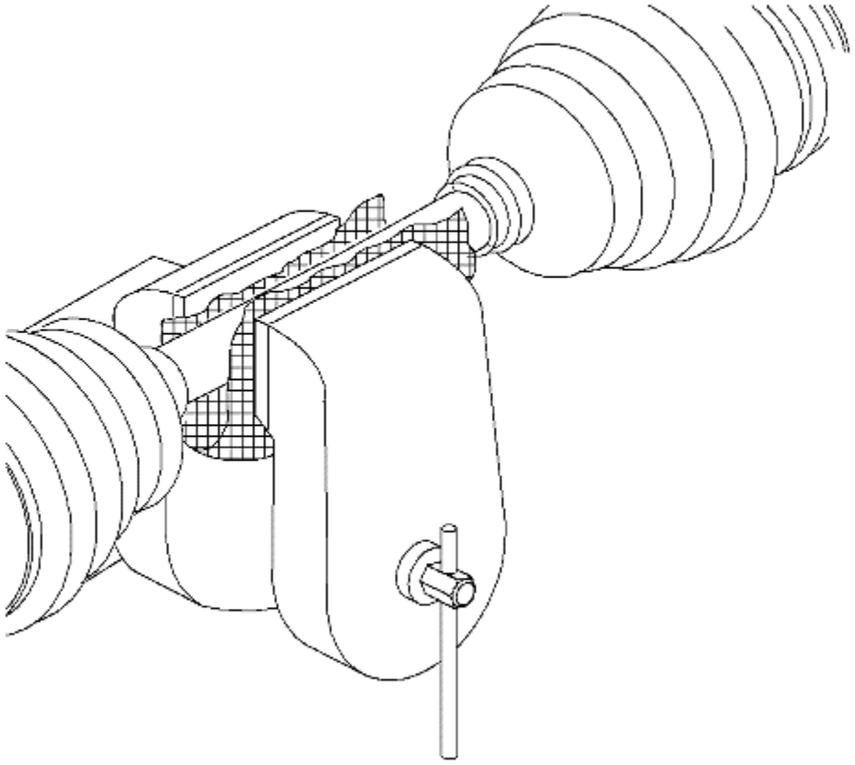

2. Install the drive axle shaft in a soft-jawed vice.

Caution: Do not cut through the wheel drive shaft inboard or outboard boot during service. Cutting through the boot may damage the sealing surface of the housing and the tripot or the constant velocity joint bushing. Damage to the sealing surface may lead to water and dirt intrusion and premature wear of the constant velocity joint.

3. Use a flat-bladed tool, remove the boot clamp (2) from the constant velocity (CV) joint (1) and the boot (3).
4. Using a pair of side cutters, remove the boot clamp (4) from the boot (3) and the wheel drive shaft (5).
5. Discard the boot clamps (2) and (4). Use only NEW clamps.

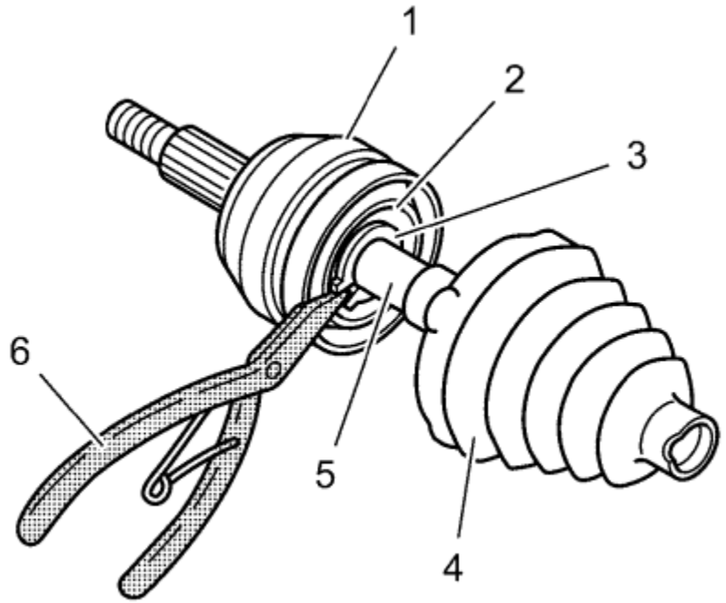

Warning: Use of eye goggles is necessary to prevent personal injury.

6. If equipped with a small swage ring, use a hand grinder to cut through the swage ring, taking care not to damage the halfshaft bar, in order to remove the swage ring. Otherwise, remove the small seal retaining clamp with a side cutter. DISCARD the retaining clamp.
7. Separate the boot (4) from CV joint outer race (1) at large diameter.
8. Slide the boot (4) away from joint along half shaft bar (5).
9. Wipe the grease from the face of the CV joint inner race (2).
10. Spread the ears on the race retaining ring (3) with *GE-396* pliers (6).

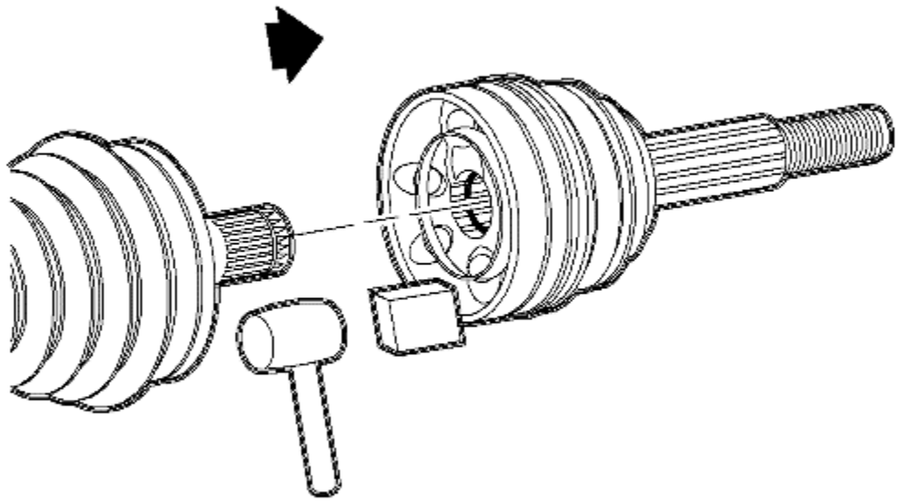

11. Using a block of wood and a hammer, remove the CV joint (2) from the half shaft bar (1).

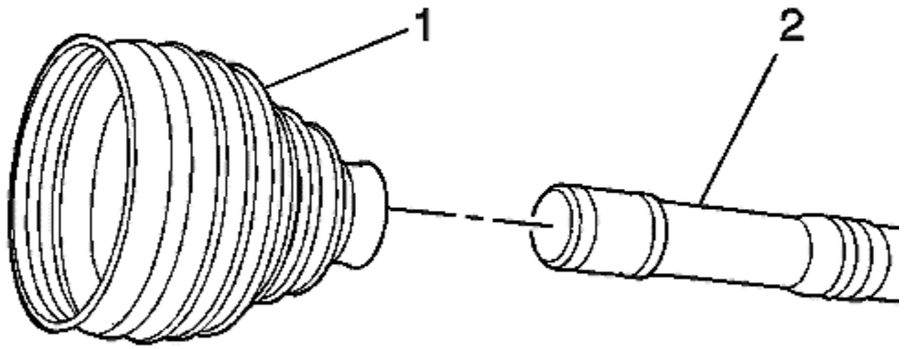

12. Remove and DISCARD the boot (1) from the half shaft bar (2).

    Note: If there is any sign of damage or excessive wear, replace the wheel drive shaft as an assembly. There are no service parts available for the outer joint assembly.

13. Clean the following items thoroughly with cleaning solvent. Remove all traces of old grease and any contaminates.
    - The inner and outer race assemblies
    - The CV joint cage
    - The chrome alloy balls
14. Clean the halfshaft bar. Use a wire brush to remove any rust in the seal mounting area (grooves).

Assemble Procedure

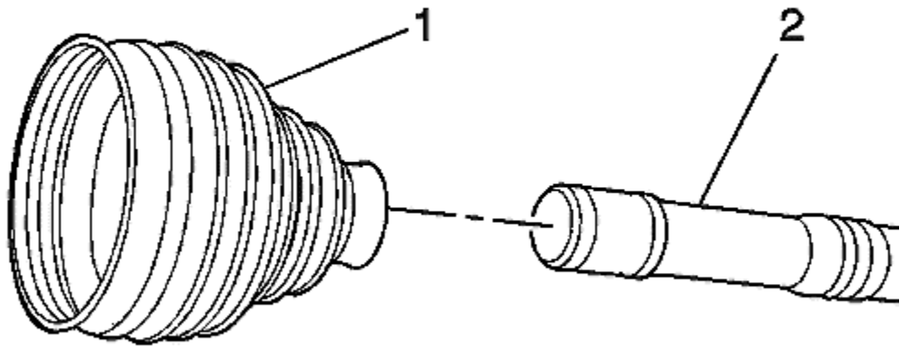

1. Position the boot and the clamp (1) on the half shaft bar (2).

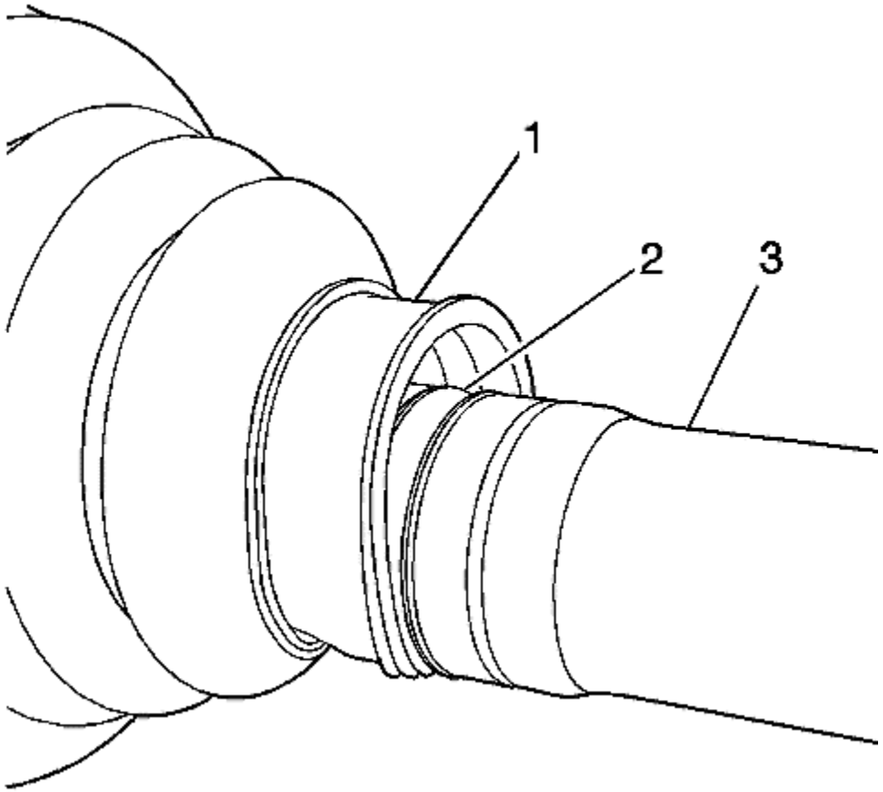

2. Ensure that the boot (1) is properly seated in the grooved (2) half shaft bar (3).
3. Place approximately **95 grams (3.4 ounces)** of lubricant inside the outboard boot and pack the CV joint with the remaining lubricant. Refer to Adhesives, Fluids, Lubricants, and Sealers .

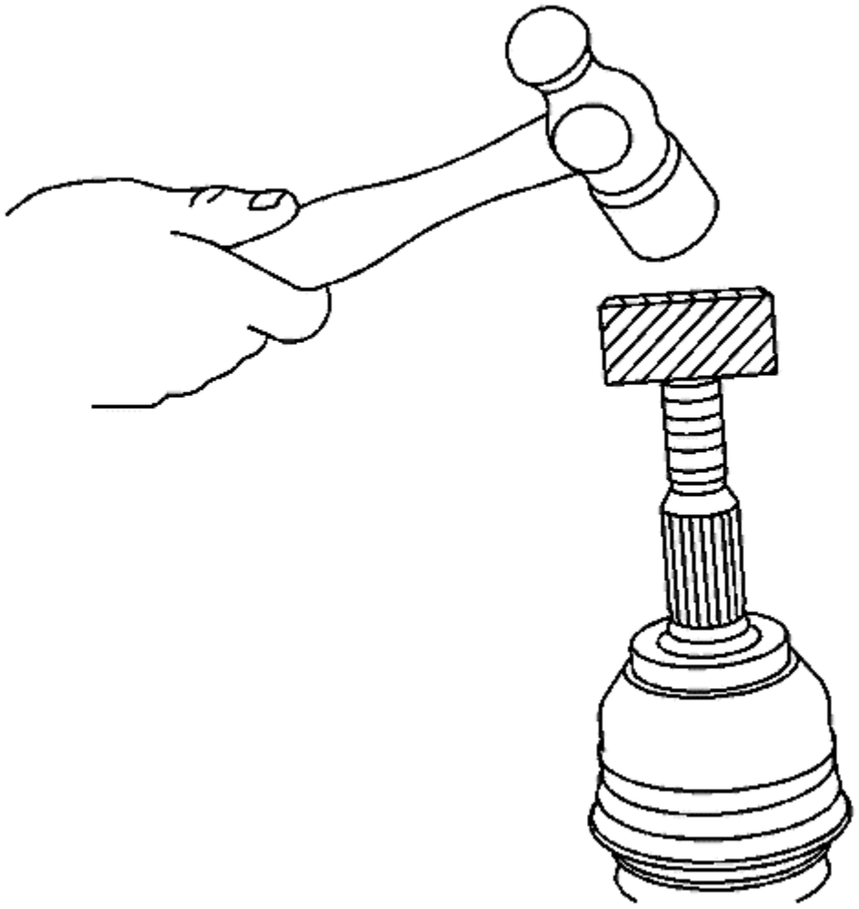

4. Using a block of wood and a hammer, install the CV joint (1) on the half shaft bar.

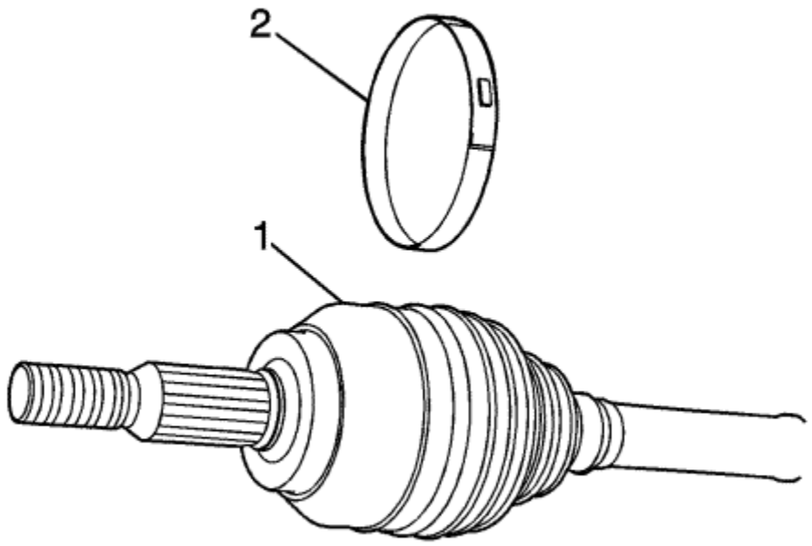

5. Install the boot clamp (2) on the CV joint housing (1).

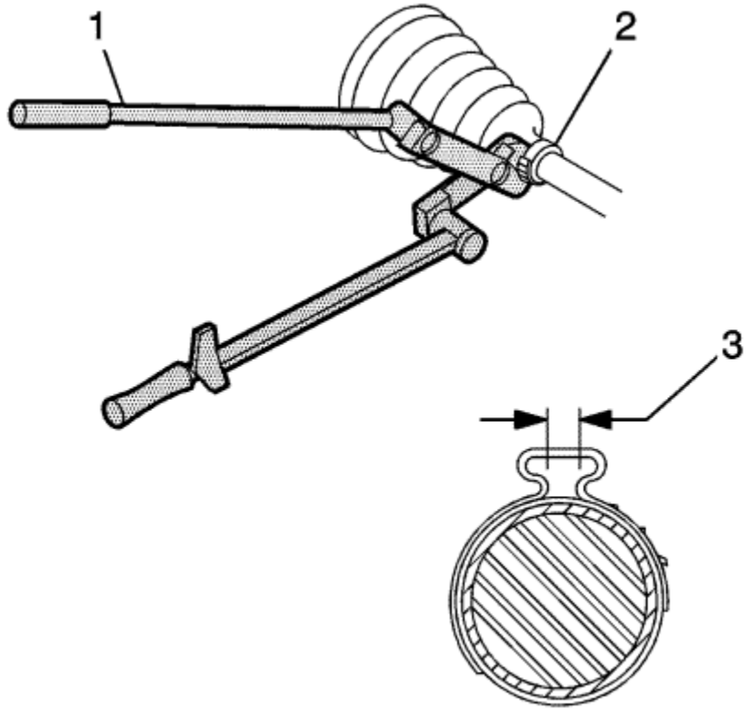

Note: Ensure that the boot clamp is properly positioned around the entire circumference of the boot.

6. Using the *DT-35910* pliers with a breaker bar and a ratchet spanner (1), tighten the boot clamp (2) until the gap (3) in the boot clamp measure **1.6 mm (0.06 in)**.

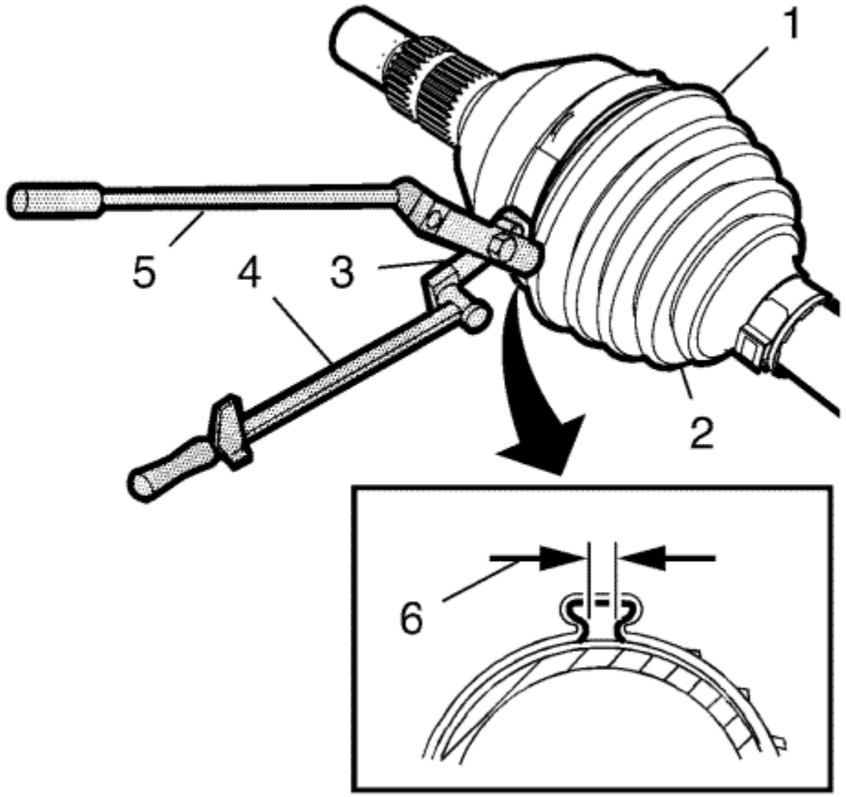

7. Using the *DT-35910* pliers (3), breaker bar (5), and the torque spanner or ratchet spanner (4), tighten the boot clamp (1) until the gap (6) in the boot clamp measure **2.0 mm (0.08 in)**.
8. Distribute the lubricant within the outer CV joint by moving it in a circular motion at least four to five times.
9. Remove the wheel drive shaft from the bench vice.
10. Install the wheel drive shaft assembly. Refer to Front Wheel Drive Shaft Replacement .

&#169© Copyright Chevrolet. All rights reserved

Wheel Drive Shafts Description and Operation

Front wheel drive axles are flexible assemblies.

Front wheel drive axles consist of the following components:

- A front wheel drive shaft tripot joint (inner joint)
- A front wheel drive shaft constant velocity joint (outer joint)
- A front wheel drive shaft
  The front wheel drive shaft connects the front wheel drive shaft tripot joint and the front wheel drive shaft constant velocity joint.

The front wheel drive shaft tripot joint is completely flexible. The front wheel drive shaft tripot joint can move in and out.

The front wheel drive shaft constant velocity joint is flexible, but the front wheel drive shaft constant velocity joint cannot move in and out.

Boots And Clamps

The front wheel drive shaft constant velocity joint and the front wheel drive shaft tripot joint boots in the front wheel drive axle are made of a thermoplastic material.

The clamps in the front wheel drive axle are made of stainless steel.

The boot provides the following functions:

- Protection of the internal parts of the front wheel drive shaft constant velocity joint and the front wheel drive shaft tripot joint
  The boot protects the grease from the following sources of damage:
  - Harmful atmospheric conditions, such as extreme temperatures or ozone gas
  - Foreign material, such as dirt or water
- Allows angular movement and the axial movement of the front wheel drive shaft tripot joint
- Allows angular movement of the front wheel drive shaft constant velocity joint

Note: Protect the boots from sharp tools and from the sharp edges of the surrounding components. Any damage to the boots or the clamps will result in leakage. Leakage will allow water to leak into the front wheel drive shaft tripot joint and the front wheel drive shaft constant velocity joints. Leakage will also allow grease to leak out of the front wheel drive shaft tripot joints and the front wheel drive shaft constant velocity joints. Leakage may cause noisy front wheel drive axle operation and eventual failure of the internal components.

The clamps provide a leak proof connection for the front wheel drive shaft tripot joint and the front wheel drive shaft constant velocity joint at the following locations:

- The housing
- The front wheel drive shaft

The thermoplastic material performs well under normal conditions and normal operation. However, the material is not strong enough to withstand the following conditions:

- Abusive handling
- Damage from sharp objects, such as sharp tools or any sharp edges of the surrounding components in the vehicle

Front Wheel Drive Shaft Tripot Joint (Inner Joint)

The front wheel drive shaft tri-pot joint is made with the tripot design without an over-extension limitation retainer.

The joint is constructed as follows for vehicles that are equipped with an automatic transmission:

- The left front wheel drive axle has a female spline. The female spline installs over a stub shaft that protrudes from the transaxle.
- The right front wheel drive axle has a female spline. The right front wheel drive axle uses barrel type snap rings in order to interlock with the intermediate shaft.

Front Wheel Drive Shaft Constant Velocity Joint (Outer Joint)

The front wheel drive shaft constant velocity joint is made with the Rzeppa joint design.

The shaft end (which mates with the knuckle/hub) has a helical spline. The helical spline ensures a tight, press-type fit.

This design prevents end play between the hub bearing and the front wheel drive axle.

&#169© Copyright Chevrolet. All rights reserved

Special Tools

Illustration	Tool Number/ Description
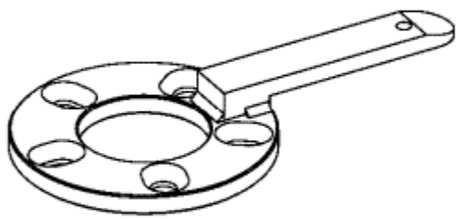	CH-49376 Holding Spanner
	CH-49400 J 28733-B Hub Spindle Remover

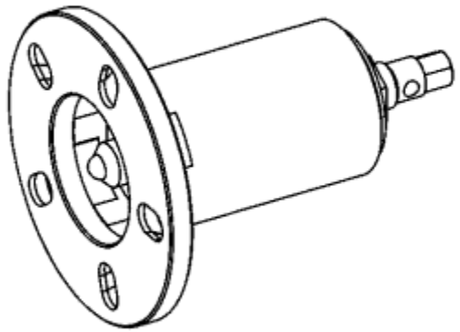	
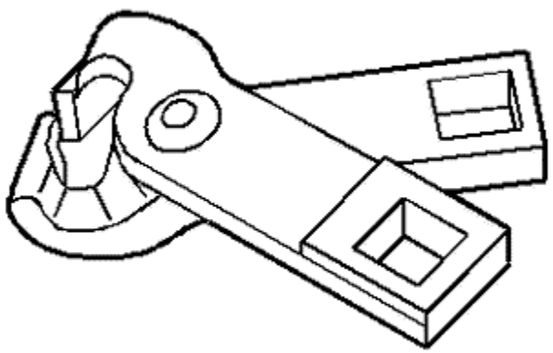	DT-35910 J35910 Drive Shaft Boot Clamp Pliers
	DT-44394-A DT-6332

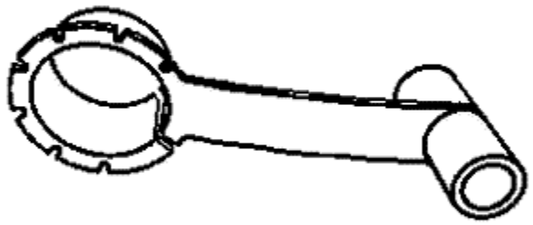	KM-6332 J-44396 J-44394-A Seal Protector
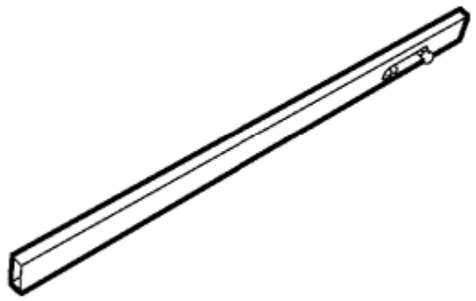	EN-956-1 KM-956-1 Extension

© Copyright Chevrolet. All rights reserved

Fastener Tightening Specifications

Application	Specification	
	Metric	English
Radio Rear Compartment Speaker Nuts	6 N·m	53 lb in

© Copyright Chevrolet. All rights reserved

Radio/Navigation System Schematics

Figure 1: Power, Ground, Aerials and Data Communication
Figure 2: Amplifier Inputs
Figure 3: Speakers
Figure 4: Speakers (UZ6)
Figure 5: Auxiliary Audio Input
Figure 6: Info Display

© Copyright Chevrolet. All rights reserved

Cellular Telephone Schematics

Mobile Telephone

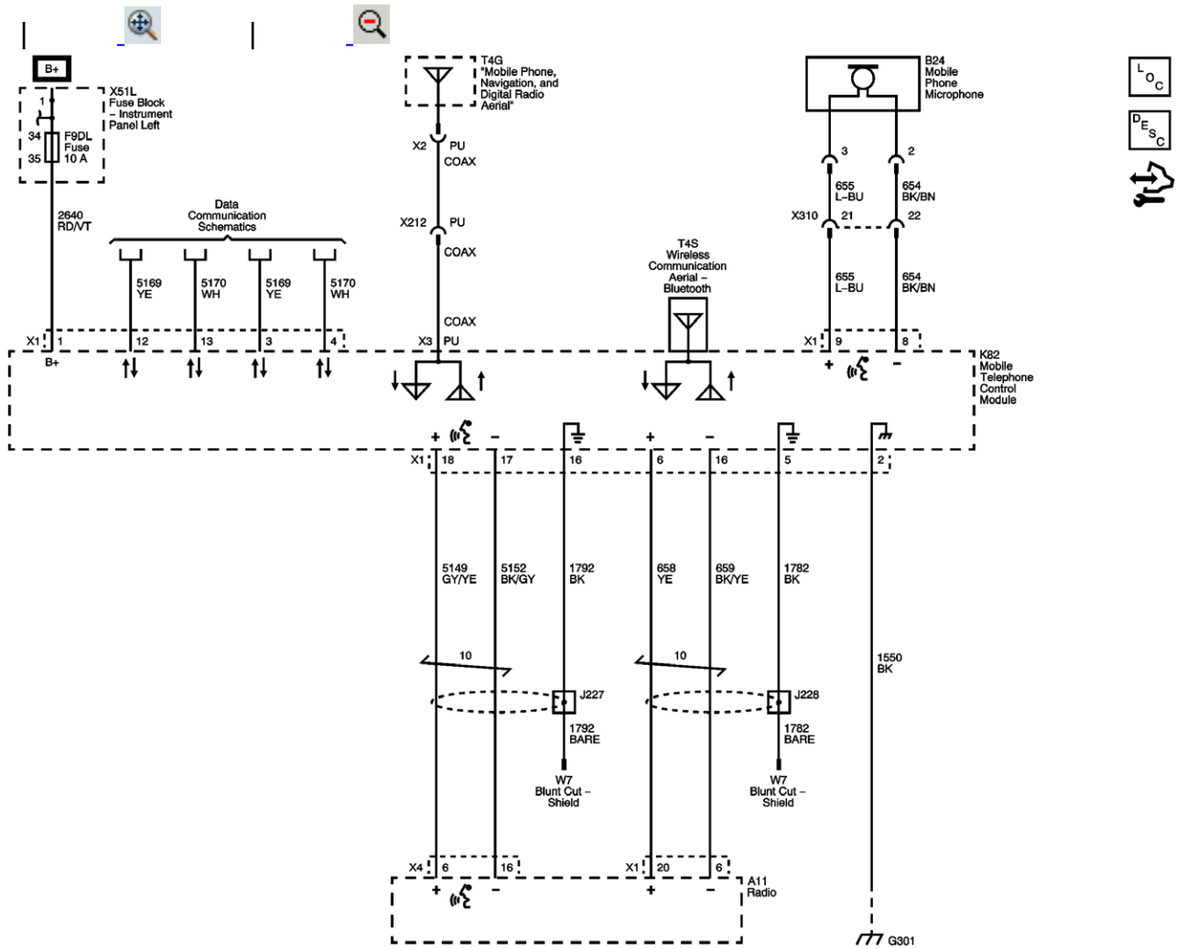

Master Electrical Component List

© Copyright Chevrolet. All rights reserved

DTC B0000

Diagnostic Instructions

- Perform the Diagnostic System Check - Vehicle prior to using this diagnostic procedure.
- Review Strategy Based Diagnosis for an overview of the diagnostic approach.
- Diagnostic Procedure Instructions provides an overview of each diagnostic category.

DTC Descriptor

DTC B0000 5A: Vehicle Speed Information Circuit Not Plausible

Diagnostic Fault Information

Circuit	Short to Ground	Open/High Resistance	Short to Voltage	Signal Performance
Signal Terminal 20 X4	B0000 5A	B0000 5A	B0000 5A	B0000 5A

Circuit/System Description

The radio receives a vehicle speed signal from the electronic brake control module (EBCM) in order to correlate actual vehicle speed to the movement of the vehicle calculated by the navigation system and reported serial data.

Conditions for Running the DTC

- Radio ON.
- Battery voltage must be between 9-16 V.

Conditions for Setting the DTC

- Vehicle speed from serial data is more than 5 km/h (3 mph) and vehicle speed pulse from the EBCM is 0 km/h (0 mph).
- Vehicle speed calculated from the navigation processing software is more than 36 km/h (22 mph) and vehicle speed pulse from the EBCM is 0 km/h (0 mph) for 10 seconds continuously.

Action Taken When the DTC Sets

- Turn by turn route navigation may be inoperative.
- Vehicle indicated location may be inaccurate.

Conditions for Clearing the DTC

- The condition responsible for setting the DTC no longer exists.
- A history DTC clears after 100 malfunction-free ignition cycles.

Reference Information

Schematic Reference

Radio/Navigation System Schematics

Connector End View Reference

Component Connector End Views

Description and Operation

Radio/Audio System Description and Operation

Electrical Information Reference

- Circuit Testing
- Connector Repairs
- Testing for Intermittent Conditions and Poor Connections
- Wiring Repairs

Scan Tool Reference

Control Module References for scan tool information

Circuit/System Testing

Note: Diagnose any antilock brake system (ABS) related DTCs before performing this diagnostic.

1. Vehicle OFF, disconnect the X4 harness connector at the A11 radio.
2. Vehicle ON, operate the vehicle drive wheels at 5 mph. Test for 3-7 Hertz between the signal circuit terminal 20 and ground.
   If not within the specified range, test the signal circuit terminal 20 for an open, high resistance, short to ground or short to voltage. If the circuit tests normal replace the K17 EBCM.
3. If the circuit tests normal, replace the A11 radio.

Repair Instructions

Perform the Diagnostic Repair Verification after completing the diagnostic procedure.

Control Module References for radio or EBCM replacement, programming and setup

&#169© Copyright Chevrolet. All rights reserved

DTC B1020

Diagnostic Instructions

- Perform the Diagnostic System Check - Vehicle prior to using this diagnostic procedure.
- Review Strategy Based Diagnosis for an overview of the diagnostic approach.
- Diagnostic Procedure Instructions provides an overview of each diagnostic category.

DTC Descriptor

DTC B1020 00: Auxiliary Electronic Control Unit (ECU) Performance

Circuit/System Description

The radio communicates with the radio/HVAC control via serial data. This DTC indicates a fault in the radio/HVAC control. No external circuits are involved. The radio may continue to respond normally to faceplate functions when this DTC is set.

Conditions for Running the DTC

- Ignition is ON or in the ACC position.
- The system voltage is at least 9.5 V and no more than 15.5 V.
- All the above conditions are present for greater than 10 seconds.

Conditions for Setting the DTC

The radio receives an improper status response indicating an internal ECU fault in the radio/HVAC control.

Action Taken when the DTC Sets

No action is taken.

Conditions for Clearing the DTC

- A current DTC clears when the radio receives a proper status response message back from the radio control assembly.
- A history DTC clears after 50 malfunction-free ignition cycles.

Diagnostic Aids

- This DTC may be stored as a history DTC without affecting the operation of the radio/HVAC control.
- If stored only as a history DTC and not retrieved as a current DTC, do not replace the radio/HVAC control.
- If this DTC is retrieved as both a current and history DTC, replace the radio/HVAC control.

Reference Information

Schematic Reference

Radio/Navigation System Schematics

Connector End View Reference

Component Connector End Views

Description and Operation

Radio/Audio System Description and Operation

Electrical Information Reference

- Circuit Testing
- Connector Repairs
- Testing for Intermittent Conditions and Poor Connections
- Wiring Repairs

Scan Tool Reference

Control Module References for scan tool information

Circuit/System Verification

If this DTC is retrieved as a current DTC, replace the A20 radio/HVAC control.

Repair Instructions

Perform the Diagnostic Repair Verification after completing the diagnostic procedure.

Control Module References for radio/HVAC control replacement, setup, and programming

&#169© Copyright Chevrolet. All rights reserved

DTC B1025, B1035, B1045, or B1055

Diagnostic Instructions

- Perform the Diagnostic System Check - Vehicle prior to using this diagnostic procedure.
- Review Strategy Based Diagnosis for an overview of the diagnostic approach.
- Diagnostic Procedure Instructions provide an overview of each diagnostic category.

DTC Descriptors

DTC B1025 01: Left Front Audio Output Circuit Short to Battery

DTC B1025 02: Left Front Audio Output Circuit Short to Ground

DTC B1025 04: Left Front Audio Output Circuit Open

DTC B1035 01: Front Audio Output Circuit Short to Battery

DTC B1035 02: Right Front Audio Output Circuit Short to Ground

DTC B1035 04: Right Front Audio Output Circuit Open

DTC B1045 01: Left Rear Audio Output Circuit Short to Battery

DTC B1045 02: Left Rear Audio Output Circuit Short to Ground

DTC B1045 04: Left Rear Audio Output Circuit Open

DTC B1055 01: Right Rear Audio Output Circuit Short to Battery

DTC B1055 02: Right Rear Audio Output Circuit Short to Ground

DTC B1055 04: Right Rear Audio Output Circuit Open

Diagnostic Fault Information

Circuit	Short to Ground	Open/High Resistance	Short to Voltage	Signal Performance
Left Front Audio Signal Circuit	B1025 02*	B1025 04**	B1025 01*	--
Right Front Audio Signal Circuit	B1035 02*	B1035 04**	B1035 01*	--
Left Rear Audio Signal Circuit	B1045 02*	B1045 04**	B1045 01*	--
Right Rear Audio Signal Circuit	B1055 02*	B1055 04**	B1055 01*	--
* Noticeable audio distortion possible. ** No or reduced sound from speaker.				

Circuit/System Description

Each of the audio output channel circuits (+) and (-), at the radio and audio amplifier has a DC bias voltage that is approximately one half of battery voltage. When using a DMM, each of the audio output channel circuits will measure approximately 6.5 V DC. The audio being played on the system is produced by a varying AC voltage that is centred around the DC bias voltage on the same circuit. The AC voltage is what causes the speaker cone to move and produce sound. The frequency (Hz) of the AC voltage signal is directly related to the frequency of the input (audio source playing) to the audio system. Both the DC bias voltage and the AC voltage signals are needed for the audio system to properly produce sound.

Diagnostic Aids

Improper speaker mounting or loose trim may cause an audible buzz or distortion. Inspect the appropriate speaker and the surrounding interior trim for proper and secure mounting. If the speaker or surrounding interior trim is found to be loose or improperly secured, correctly secure the item.

Conditions for Running the DTC

- Ignition is ON or in the ACC position
- The system voltage is 9-16 V
- The test is run once during radio wake up

Conditions for Setting the DTC

B1025 01, B1035 01, B1045 01, B1055 01

The radio detects a short to voltage on the specified audio (+) or (-) circuit.

B1025 02, B1035 02, B1045 02, B1055 02

The radio detects a short to ground on the specified audio (+) or (-) circuit.

B1025 04, B1035 04, B1045 04, B1055 04

The radio detects an open on the specified audio (+) or (-) circuit.

Action Taken When the DTC Sets

The radio continues to send the output signal to the speaker signal circuit with the current fault.

Conditions for Clearing the DTC

- A current DTC clears when the conditions for setting the DTC are no longer present and the ignition has been cycled from OFF to ON.
- A history DTC clears after 50 malfunction-free ignition cycles.

Reference Information

Schematic Reference

Radio/Navigation System Schematics

Connector End View Reference

Component Connector End Views

Description and Operation

Radio/Audio System Description and Operation

Electrical Information Reference

- Circuit Testing
- Connector Repairs
- Testing for Intermittent Conditions and Poor Connections
- Wiring Repairs

Scan Tool Reference

Control Module References for scan tool information

Circuit/System Testing

1. Vehicle OFF, disconnect the harness connector at the appropriate P19 speaker.
2. Radio ON, test for 5.0-7.5 V between the signal circuit terminal 1 and ground.
   If less than the specified range, test the signal circuit for a short to ground or an open/high resistance. If the circuit tests normal, replace the A11 radio.
   If greater than the specified range, test the signal circuit for a short to voltage. If the circuit tests normal, replace the A11 radio.
3. Test for 5.0-7.5 V between the signal circuit terminal 2 and ground.
   If less than the specified range, test the signal circuit for a short to ground or an open/high resistance. If the circuit tests normal, replace the A11 radio.
   If greater than the specified range, test the signal circuit for a short to voltage. If the circuit tests normal, replace the A11 radio.
4. If all circuits test normal, replace the appropriate P19 speaker.

Repair Instructions

Perform the Diagnostic Repair Verification after completing the diagnostic procedure.

- Speaker Replacement Reference
- Control Module References for radio replacement, setup, and programming.

&#169© Copyright Chevrolet. All rights reserved

DTC B125A

Diagnostic Instructions

- Perform the Diagnostic System Check - Vehicle prior to using this diagnostic procedure.
- Review Strategy Based Diagnosis for an overview of the diagnostic approach.
- Diagnostic Procedure Instructions provides an overview of each diagnostic category.

DTC Descriptors

DTC B125A 02: Aerial Signal Circuit Short to Ground

DTC B125A 04: Aerial Signal Circuit Open Circuit

Diagnostic Fault Information

Circuit	Short to Ground	Open/High Resistance	Short to Voltage	Signal Performance
Radio Aerial Coax	B125A 02	B125A 04	1	--
Ground	--	1	--	--
1. May exhibit possible AM/FM interference.				

Circuit/System Description

The AM/FM aerial is part of the multi-band aerial is located on the roof of the vehicle. The radio provides battery voltage to the AM/FM amplifier in the aerial base using the centre conductor of the aerial coaxial cable. When a 12 V signal is seen by the amplifier, both AM and FM signals are amplified.

Conditions for Running the DTC

- Vehicle in Service Mode.
- Battery voltage must be between 9-16 V.

Conditions for Setting the DTC

B125A 02

The radio detects a short to ground in the aerial signal circuit centre conductor.

B125A 04

The radio detects an open in the aerial signal circuit centre conductor.

Action Taken When the DTC Sets

Radio reception may be poor or not available.

Conditions for Clearing the DTC

- The condition responsible for setting the DTC no longer exists.
- A history DTC will clears after 50 consecutive malfunction-free ignition cycles have occurred.

Reference Information

Schematic Reference

Radio/Navigation System Schematics

Connector End View Reference

Component Connector End Views

Description and Operation

Radio/Audio System Description and Operation

Electrical Information Reference

- Circuit Testing
- Connector Repairs
- Testing for Intermittent Conditions and Poor Connections

- Wiring Repairs

Scan Tool Reference

Control Module References for scan tool information

Circuit/System Verification

Vehicle in Service Mode, radio ON, tune to a strong AM or FM station. Verify that the AM or FM reception is clear.

Circuit/System Testing

1. Vehicle OFF, disconnect the radio aerial coax from the A11 radio and the T4G aerial.
2. Test for infinite resistance between the aerial coax centre terminal and ground.
   If less than the specified value, replace the aerial coax.
3. Test for infinite resistance between the coax centre terminal and the outer shield.
   If less than the specified value, replace the aerial coax.
4. Test for less than 5 Ω on the aerial coax centre circuit from end to end.
   If greater than the specified range, replace the aerial coax.
5. Vehicle in Service Mode, test for less than 1 V between the aerial coax centre terminal and ground.
   If greater than the specified range, replace the aerial coax.
6. Connect the aerial coax to the A11 radio. Test for 12-15 V between the aerial coax centre terminal and ground at the T4G aerial connector.
   If not within the specified range, replace the A11 radio.
7. If all circuits test normal, replace the T4G aerial.

Repair Instructions

Perform the Diagnostic Repair Verification after completing the diagnostic procedure.

- Radio Aerial Base Replacement
- Control Module References for radio replacement, programming and setup

&#169© Copyright Chevrolet. All rights reserved

DTC B1265

Diagnostic Instructions

- Perform the Diagnostic System Check - Vehicle prior to using this diagnostic procedure.
- Review Strategy Based Diagnosis for an overview of the diagnostic approach.
- Diagnostic Procedure Instructions provides an overview of each diagnostic category.

DTC Descriptor

DTC B1265 02: Switched 14 Volt Performance Short to Ground

Circuit/System Description

When the radio is on, a discrete 12 V signal is supplied on the entertainment remote enable circuit to the Audio Amplifier and the Information Display Module. This signal is used to control the power state of the components.

Conditions for Running the DTC

The following are conditions that must be present in order for the radio to enable diagnostics:

- The radio is ON.
- The system voltage is 9 -16 V

Conditions for Setting the DTC

- The radio detects a short to ground on the entertainment remote enable circuit circuit.
- The above condition is present for greater than 250 mS.

Action Taken When the DTC Sets

- The radio implements a current limiting mode and disables the output on the entertainment remote enable circuit.

- All components connected on the entertainment remote enable circuit will be inoperative.

Conditions for Clearing the DTC

- The condition for setting the DTC no longer exists.
- After the ignition has been OFF for a sufficient amount of time to allow the radio to enter a low power/sleep state, the radio will re-enable the output on the following ignition cycle and the DTC will become history.
- A history DTC clears after 50 malfunction-free ignition cycles.

Diagnostic Aids

- This DTC may be stored as a history DTC without affecting the operation of the radio/infotainment systems.
- The radio's current limiting logic will not re-enable the output on the entertainment remote enable circuit until after the radio performs a full power-down. It may be necessary to wait 5 minutes with the key OFF and retained accessory power OFF for the radio to re-enable this output.

Reference Information

Schematic Reference

Radio/Navigation System Schematics

Connector End View Reference

Component Connector End Views

Description and Operation

Radio/Audio System Description and Operation

Electrical Information Reference

- Circuit Testing
- Connector Repairs
- Testing for Intermittent Conditions and Poor Connections
- Wiring Repairs

Scan Tool Reference

Control Module References for scan tool information

Circuit/System Testing

1. Vehicle OFF, radio OFF, radio B+ fuse removed, disconnect all of the connectors listed below:
   - T3 Audio Amplifier X2
   - P17 Information Display Module X1 (display screen)
2. Reinstall the radio B+ fuse. Vehicle in Service Mode, radio ON, verify that a test lamp illuminates between the entertainment remote enable circuit terminals listed below and ground:
   - T3 Audio Amplifier X2 terminal 14
   - P17 Information Display Module X1 terminal 6

   If the test lamp does not illuminate, test the entertainment remote enable circuit for a short to ground or an open/high resistance. If the circuit tests normal replace the radio.
3. Re-connect the X2 harness connector at the T3 audio amplifier. Verify that DTC B1265 does NOT set as current.
   If DTC B1265 sets as current, replace the T3 audio amplifier.
4. Re-connect the X1 harness connector at the P17 information display module. Verify that DTC B1265 does NOT set as current.
   If DTC B1265 sets as current, replace the P17 information display module.

Repair Instructions

Perform the Diagnostic Repair Verification after completing the repair.

- Driver Information Display Replacement
- Control Module References for radio and amplifier replacement, programming and setup

&#169© Copyright Chevrolet. All rights reserved

DTC B1271

Diagnostic Instructions

- Perform the Diagnostic System Check - Vehicle prior to using this diagnostic procedure.
- Review Strategy Based Diagnosis for an overview of the diagnostic approach.
- Diagnostic Procedure Instructions provides an overview of each diagnostic category.

DTC Descriptor

DTC B1271 00: Theft Protection Active

Circuit/System Description

When the radio is initially installed in the vehicle, the radio receives VIN information via serial data. The radio stores a portion of the VIN and compares this sequence to the VIN information received each time the radio powers on. The VIN in the radio is a single one-time learn.

The radio theft deterrent system is intended to disable or limit radio functionality if incorrect vehicle information is received by the radio. The radio disables functionality if the VIN information received by the radio does not match the VIN information that has been learned by the radio. This DTC is generated by the module when the Theft Protection is activated.

Conditions for Running the DTC

This DTC test runs when the radio changes from OFF to ON.

Conditions for Setting the DTC

The radio has learned a correct VIN sequence and the VIN information received via serial data does NOT match the learned VIN sequence.

Action Taken When the DTC Sets

The radio may be disabled or have limited functionality. The radio display will indicate that theft protection is active.

Conditions for Clearing the DTC

The radio receives the correct VIN information via serial data.

Diagnostic Aids

A possible cause of incorrect VIN info could be the radio was originally installed in another vehicle.

Reference Information

Schematic Reference

Radio/Navigation System Schematics

Connector End View Reference

Component Connector End Views

Description and Operation

Radio/Audio System Description and Operation

Electrical Information Reference

- Circuit Testing
- Connector Repairs
- Testing for Intermittent Conditions and Poor Connections
- Wiring Repairs

Scan Tool Reference

Control Module References for scan tool information

Circuit/System Verification

If this DTC is retrieved as a current DTC, replace the radio.

Repair Instructions

Perform the Diagnostic Repair Verification after completing the diagnostic procedure.

Control Module References for radio replacement, setup, and programming.

&#169© Copyright Chevrolet. All rights reserved

DTC B1278 or B1279

Diagnostic Instructions

- Perform the Diagnostic System Check - Vehicle prior to using this diagnostic procedure.
- Review Strategy Based Diagnosis for an overview of the diagnostic approach.
- Diagnostic Procedure Instructions provides an overview of each diagnostic category.

DTC Descriptors

DTC B1278 01: Left Auxiliary Input Signal Circuit Short to Battery

DTC B1278 02: Left Auxiliary Input Signal Circuit Short to Ground

DTC B1279 01: Right Auxiliary Input Signal Circuit Short to Battery

DTC B1279 02: Right Auxiliary Input Signal Circuit Short to Ground

Circuit/System Description

A remote 3.5 mm auxiliary stereo jack allows playback of audio signals from remote devices (e.g., laptop computer, IPOD, MP3 player, etc.). When a remote device audio mini-plug is inserted in the remote auxiliary jack, an internal mechanical switch opens. The radio detects the device, switches to AUX as the audio source, and the device begins playing. Audio signals from the device are sent to the radio from the auxiliary input jack via the left, right, and common audio signal circuits.

Conditions for Running the DTC

- Ignition in RUN or ACC position.
- The system voltage is at least 9.5 V and no more than 15.5 V.

Conditions for Setting the DTC

B 1278

The radio detects a short to battery or short to ground on the left auxiliary audio signal circuit.

B 1279

The radio detects a short to battery or short to ground on the right auxiliary audio signal circuit.

The above conditions are present for greater than 250 mS.

Action Taken When the DTC Sets

No audio is heard from the remote audio device.

Conditions for Clearing the DTC

- The conditions for setting the DTC are no longer present on the auxiliary input signal circuits.
- A history DTC clears after 50 malfunction-free ignition cycles.

Diagnostic Aids

- This DTC may be stored as a history DTC without affecting the operation of the module.
- If stored only as a history DTC and not retrieved as a current DTC, do not replace the module.

Reference Information

Schematic Reference

Radio/Navigation System Schematics

Connector End View Reference

Component Connector End Views

Description and Operation

Radio/Audio System Description and Operation

Electrical Information Reference

- Circuit Testing

- Connector Repairs
- Testing for Intermittent Conditions and Poor Connections
- Wiring Repairs

Scan Tool Reference

Control Module References for scan tool information

Circuit/System Testing

1. Vehicle OFF, disconnect the X1 harness connector at the X83 auxiliary audio jack.
2. Vehicle in Service Mode, test for less than 1 V between the terminals listed below and ground:
   - signal terminal 1
   - signal terminal 2

   If greater than the specified value, test the circuit for a short to voltage. If the circuit tests normal, replace the A11 radio.
3. Vehicle OFF, disconnect the X1 harness connector at the radio. Test for infinite resistance between the circuits listed below and ground:
   - auxiliary audio common circuit terminal 23
   - left auxiliary audio circuit terminal 24
   - right auxiliary audio circuit terminal 10

   If not the specified value, test the signal circuit for a short to ground.
4. If all circuits test normal, replace the X83 auxiliary audio jack.

Repair Instructions

Perform the Diagnostic Repair Verification after completing the diagnostic procedure.

- Audio Disc Player, USB, Auxiliary In, and Memory Card Receptacle Replacement
- Control Module References for radio replacement, programming and setup

&#169© Copyright Chevrolet. All rights reserved

DTC B1287

Diagnostic Instructions

- Perform the Diagnostic System Check - Vehicle prior to using this diagnostic procedure.
- Review Strategy Based Diagnosis for an overview of the diagnostic approach.
- Diagnostic Procedure Instructions provides an overview of each diagnostic category.

DTC Descriptors

DTC B1287 01: Amplifier Control Signal Circuit Short to Battery

DTC B1287 02: Amplifier Control Signal Circuit Short to Ground

DTC B1287 04: Amplifier Control Signal Circuit Open

Diagnostic Fault Information

Circuit	Short to Ground	Open/High Resistance	Short to Voltage	Signal Performance
Amplifier Control	B1287 02,**	B1287 04,**	B1287 01,*	-
* No audio output. ** 4 Channel unmute, possible noise in speakers when radio muted or turned off				

Circuit/System Description

The radio amplifier control circuit provides varying pulse width modulated (PWM) signals to control overall muting of the amplifier. The PWM signals are varying duty cycle percentages ranging from 0-100 percent. A low duty cycle unmutes all amplifier channels and a high duty cycle mutes all amplifier channels. The amplifier control circuit will measure less than 1 V when the mute function is OFF, and approximately 8 V DC when at full mute. The radio monitors the amp control circuit for faults.

Conditions for Running the DTC

The following are conditions that must be present in order for the radio to enable the diagnostics.

- The radio is in ACCESSORY, RUN, or RAP power mode.
- The system voltage is 9-16 V.
- The radio performs the test once during wakeup.

Conditions for Setting the DTC

The radio detects a fault on the amplifier control circuit 400 ms after radio activates the remote enable circuit.

Action Taken When the DTC Sets

Radio sets the DTC and continues to output correct state.

Conditions for Clearing the DTC

- The condition must no longer be present.
- A history DTC clears after 50 malfunction-free ignition cycles.

Reference Information

Schematic Reference

Radio/Navigation System Schematics

Connector End View Reference

Component Connector End Views

Description and Operation

Radio/Audio System Description and Operation

Electrical Information Reference

- Circuit Testing
- Connector Repairs
- Testing for Intermittent Conditions and Poor Connections
- Wiring Repairs

Scan Tool Reference

Control Module References for scan tool information

Circuit/System Testing

Note: To prevent misdiagnosis, the door chime must be OFF during testing. Ensure the driver door latch is closed during testing.

1. Vehicle OFF, disconnect the X2 harness connector at the T3 amplifier.
2. Vehicle in Service Mode, radio ON, mute ON, test for 7.5-8.5 V between the amplifier control circuit terminal 12 and ground.
   If less than the specified range, test the control circuit for a short to ground or an open/high resistance. If the circuit tests normal, replace the A11 radio.
   If greater than the specified range, test the control circuit for a short to voltage. If the circuit tests normal, replace the A11 radio.
3. Mute OFF, test for less than 1 V between the amplifier control circuit terminal 12 and ground.
   If greater than the specified range, replace the A11 radio.
4. If all circuits test normal, replace the T3 amplifier.

Repair Instructions

Perform the Diagnostic Repair Verification after completing the diagnostic procedure.

Control Module References for radio and amplifier replacement, programming and setup

&#169© Copyright Chevrolet. All rights reserved

DTC B2462

Diagnostic Instructions

- Perform the Diagnostic System Check - Vehicle prior to using this diagnostic procedure.
- Review Strategy Based Diagnosis for an overview of the diagnostic approach.
- Diagnostic Procedure Instructions provides an overview of each diagnostic category.

DTC Descriptors

DTC B2462 01: Global Positioning System Short to Battery

DTC B2462 02: Global Positioning System Short to Ground

DTC B2462 04: Global Positioning System Open

Circuit/System Description

The navigation aerial is connected to the navigation radio. The radio supplies 5 V to the aerial to power the internal amplifier thorough the centre conductor of the aerial coax cable.

Conditions for Running the DTC

- Radio On.
- System voltage is greater than 9 V and less than 16 V.
- The navigation radio tests the GPS aerial every 10 seconds.

Conditions for Setting the DTC

B2462 01

The radio detects a short to B+ on the GPS aerial signal circuit.

B2462 02

The radio detects a short to ground on the GPS aerial signal circuit.

B2462 04

The radio detects an open/high resistance on the GPS aerial signal circuit.

Action Taken When the DTC Sets

- The radio uses the last reported position and the vehicle speed signal to calculate the vehicle position.
- Route guidance may be inaccurate.
- Turn by turn navigation may be inaccurate or inoperative.

Conditions for Clearing the DTC

- The condition responsible for setting the DTC no longer exists.
- A history DTC will clear once 50 consecutive malfunction-free ignition cycles have occurred.

Reference Information

Schematic Reference

Radio/Navigation System Schematics

Connector End View Reference

Component Connector End Views

Description and Operation

Radio/Audio System Description and Operation

Electrical Information Reference

- Circuit Testing
- Connector Repairs
- Testing for Intermittent Conditions and Poor Connections

- Wiring Repairs

Scan Tool Reference

Control Module References for scan tool information

Special Tools

EL-49903 OnStar Aerial Diagnostic Tool Kit

Circuit/System Testing

Without UE1

1. Ignition OFF, disconnect the navigation aerial coax cable from the A11 radio.
2. Connect the EL-49903 to the A11 radio, place the test aerial on the roof of the vehicle.
3. Ignition ON, verify DTC B2462 is not set in the A11 radio.
   If DTC B2462 is set as current, replace the A11 radio.
4. Ignition OFF, reconnect the navigation aerial coax cable at the A11 radio.
5. Disconnect the aerial coax cable from the T4G navigation aerial.
6. Ignition ON, test for 4.5-5.5 V between the coax cable centre conductor and the outer shield.
   If not within the specified range, test or replace the coax cable.
7. If all circuits test normal, replace the T4G navigation aerial.

Component Testing

Caution: Refer to Test Probe Caution in the Preface section.

Note: Before testing the coax cable, check the cable exterior for being pinched, cut, damaged, or having loose connections at the components, which can cause reception issues.

To prevent false reading when testing the centre coax terminals, use care not to ground the test probe on the outer housing/shield.

Coax Cable Test

1. Ignition OFF, disconnect the coax cable at both components.
2. Test for less than 5 Ω between both ends of the coax cables centre terminals.
   If greater than the specified range, replace the coax cable
3. Test for less than 5 Ω between both ends of the coax cable outer shield.
   If greater than the specified range, replace the coax cable

4. Test for infinite resistance between the coax cable centre wire and the outer coax shield.
   If less than the specified range, replace the coax cable.

Repair Instructions

- Radio Aerial Base Replacement
- Control Module References for radio replacement, setup, and programming.

&#169© Copyright Chevrolet. All rights reserved

DTC B2470

Diagnostic Instructions

- Perform the Diagnostic System Check - Vehicle prior to using this diagnostic procedure.
- Review Strategy Based Diagnosis for an overview of the diagnostic approach.
- Diagnostic Procedure Instructions provides an overview of each diagnostic category.

DTC Descriptors

DTC B2470 01: Mobile Phone Aerial Circuit Short to Battery

DTC B2470 02: Mobile Phone Aerial Circuit Short to Ground

DTC B2470 04: Mobile Phone Aerial Circuit Open

Circuit/System Description

The mobile phone aerial is connected to the Mobile Telephone Control Module. This module supplies 5 V to the mobile phone aerial to power the internal amplifier.

Conditions for Running the DTC

- The vehicle is ON.
- System voltage is between 9.5-15.5 V.
- The above conditions are present for greater than 1 s.

Conditions for Setting the DTC

The Mobile Telephone Control Module does not detect the presence of a mobile phone aerial.

Action Taken When the DTC Sets

Mobile telephone communication cannot be established.

Conditions for Clearing the DTC

- The Mobile Telephone Control Module detects the presence of a mobile phone aerial.
- A history DTC clears after 50 malfunction free ignition cycles.

Reference Information

Schematic Reference

Cellular Telephone Schematics

Connector End View Reference

Component Connector End Views

Description and Operation

Cellular Telephone Description and Operation

Electrical Information Reference

- Circuit Testing
- Connector Repairs
- Testing for Intermittent Conditions and Poor Connections
- Wiring Repairs

Scan Tool Reference

Control Module References for scan tool information

Circuit/System Verification

Verify that the Mobile Phone Aerial assembly is not damaged.

If the antenna assembly is damaged, replace the T4F Mobile Phone Antenna or T4E Mobile Phone and Navigation Antenna.

Circuit/System Testing

Note: The vehicle may be equipped with sectioned coax. Test each section and replace only the faulty section, not the entire length of coax.

1. Vehicle OFF, disconnect the mobile coax cable connector at the T4F Mobile Phone Aerial or T4E Mobile Phone and Navigation Aerial.
2. Vehicle ON, Test for 5 V between the coax cable centre wire and the outer coax shield.
   If less than the specified range, test the coax cable for an open/high resistance or a short to ground. If the coax cable tests normal, replace the K82 Mobile Telephone Control Module.
   If greater than the specified range, test the coax cable for a short to voltage. If the coax cable tests normal, replace the K82 Mobile Telephone Control Module.
3. If all circuits test normal, replace the T4F Mobile Phone Antenna or T4E Mobile Phone and Navigation Antenna.

Component Testing

Caution: Refer to Test Probe Caution in the Preface section.

Note: Before testing the coax cable, check the cable exterior for being pinched, cut, damaged, or having loose connections at the components, which can cause reception issues.

To prevent false reading when testing the centre coax terminals, use care not to ground the test probe on the outer housing/shield.

Coax Cable Test

1. Vehicle OFF, disconnect the coax cable at both components.
2. Test for less than 5 Ω between both ends of the coax cables centre terminals.
   If greater than the specified range, replace the failed coax cable.
3. Test for greater than infinite resistance between the coax cable centre wire and the outer coax shield.
   If less than the specified range, replace the coax cable.

Repair Instructions

Perform the Diagnostic Repair Verification after completing the diagnostic procedure.

- Radio Aerial Base Replacement
- Control Module References for telematics communication interface control module replacement, programming and setup

&#169© Copyright Chevrolet. All rights reserved

DTC B2485

Diagnostic Instructions

- Perform the Diagnostic System Check - Vehicle prior to using this diagnostic procedure.
- Review Strategy Based Diagnosis for an overview of the diagnostic approach.
- Diagnostic Procedure Instructions provide an overview of each diagnostic category.

DTC Descriptors

DTC B2485 02: Wireless Communication Aerial Circuit Short to Ground

DTC B2485 04: Wireless Communication Aerial Circuit Open

Diagnostic Fault Information

Circuit	Short to Ground	Open/High Resistance	Short to Voltage	Signal Performance
Signal	B2485 02	B2485 04	--	--

Circuit/System Description

The Bluetooth aerial is a small fixed aerial connected directly to the mobile telephone control module and is used to send and receive signals from a Bluetooth enabled cellular phone. The aerial is external to the vehicle.

Conditions for Running the DTC

- The ignition is in OFF, ACCESSORY or RUN position.
- The system voltage is between 9–16 V.
- The mobile telephone control module tests the aerial once every second.

Conditions for Setting the DTC

B2485 02

- The signal voltage is less than 1 V.
- The above conditions must be met for 500 ms.

B2485 04

- The signal voltage is greater than 2 V.
- The above conditions must be met for 500 ms.

Action Taken When the DTC Sets

The Bluetooth communication can not be establish.

Conditions for Clearing the DTC

The DTC will become history when the condition for setting the DTC is no longer present.

Reference Information

Schematic Reference

Cellular Telephone Schematics

Connector End View Reference

Component Connector End Views

Description and Operation

Cellular Telephone Description and Operation

Electrical Information Reference

- Circuit Testing
- Connector Repairs
- Testing for Intermittent Conditions and Poor Connections
- Wiring Repairs

Circuit/System Testing

1. Replace the T4S Wireless Communication Aerial - Bluetooth.
2. Clear the DTCs and operate the vehicle within the conditions for running the DTC. Verify DTC B2485 does not set.
   If the DTC sets, replace the K82 Mobile Telephone Control Module.

Repair Instructions

Perform the Diagnostic Repair Verification after completing the diagnostic procedure.

Control Module References for mobile telephone control module replacement, programming and setup

&#169© Copyright Chevrolet. All rights reserved

Symptoms - Mobile Communication

Note: The following steps must be completed before using the symptom tables.

1. Perform the Diagnostic System Check - Vehicle .
   - There are no DTCs set.
   - The control modules can communicate via the serial data link.
2. Review the system description and operation in order to familiarize yourself with the system functions. Refer to Cellular Telephone Description and Operation .

Visual/Physical Inspection

- Inspect for aftermarket devices which may affect the operation of the mobile telephone control module. Refer to Checking Aftermarket Accessories .
- Inspect the easily accessible or visible system components, for obvious damage or conditions, which may cause the symptom.

Intermittent

Faulty electrical connections or wiring may be the cause of intermittent conditions. Refer to Testing for Intermittent Conditions and Poor Connections .

Symptom List

Refer to a symptom diagnostic procedure from the following list in order to diagnose the symptom:

- Cellular Telephone Conversation Partner Does Not Hear You
- Cellular Telephone Conversation Partner Cannot Be Heard
- Cellular Telephone Charging Malfunction

&#169© Copyright Chevrolet. All rights reserved

Symptoms - Entertainment

Important: The following steps must be completed before using the symptom table.

1. Perform the Diagnostic System Check - Vehicle before using the Symptom Tables in order to verify that all of the following are true:
   - There are no DTCs set.
   - The control modules can communicate via the serial data link.
2. Review the system operation in order to familiarize yourself with the system functions. Refer to Radio/Audio System Description and Operation .

Visual/Physical Inspection

- Inspect for aftermarket devices which could affect the operation of the Radio/Audio System. Refer to Checking Aftermarket Accessories .
- Inspect for easily accessible or visible system components for obvious damage or conditions which could cause the symptom.

Intermittent

Faulty electrical connections or wiring may be the cause of intermittent conditions. Refer to Testing for Intermittent Conditions and Poor Connections .

Symptom List

Refer to a symptom diagnostic procedure from the following list in order to diagnose the symptom:

- Auxiliary Audio Input Malfunction
- No Global Positioning System (GPS) Reception
- Radio Controls Malfunction
- Radio Information Display Malfunction - DTC U0257
- Radio Poor Reception
- Speaker Malfunction

&#169© Copyright Chevrolet. All rights reserved

Auxiliary Audio Input Malfunction

Diagnostic Instructions

- Perform the Diagnostic System Check - Vehicle prior to using this diagnostic procedure.
- Review Strategy Based Diagnosis for an overview of the diagnostic approach.
- Diagnostic Procedure Instructions provide an overview of each diagnostic category.

Circuit/System Description

Auxiliary Audio Input Jack

The 3.5 mm (1/8 in.) auxiliary audio input jack is located in the console. All circuits from the auxiliary jack are connected directly to the radio. When a portable audio playback device is connected to the auxiliary jack an internal switch opens. The radio detects the device and switches to AUX as the audio source. Audio signals from the device are sent to the radio from the auxiliary input jack via the left, right, and common audio signal circuits.

USB Port

The vehicle may be equipped with a USB port in the console. This port allows USB connectivity to the infotainment system from portable media players or a USB storage device (memory stick/ flash drive). When a device is connected to the USB port, the system detects the device and switches to USB as the audio source. Once connected, the device can be controlled from the radio controls.

The USB port is connected to the radio via a standard USB cable. Mini type USB connectors are used to connect the cable at the USB port and the radio. Standard USB male to female connections are typically used for connecting USB cables together where an in-line connection is required. An in-line cable connection is typically found between the console and I/P harness.

Not all portable media player devices are compatible. Memory stick/ flash drive capability is limited to MP3 and WMA file types only. Video transfer from any device is not supported. Refer to the owner's manual for information on USB devices, control, and operation.

Diagnostic Aids

Auxiliary Audio Input Jack

- When a device is first connected to the 3.5 mm (1/8 in.) input jack the infotainment system automatically switches to that device. If an auxiliary device has already been

connected, press the AUX or CD/AUX button to select the device.
- If the system detects the device, but the audio is not heard or is not clear, attempt to connect the device using a different cable; cables can deteriorate over time or become damaged.
- Playback of an audio device that is connected to the 3.5 mm jack can only be controlled using the controls on the device.
- The volume control on the device may need to be adjusted to ensure sufficient playback volume through the infotainment system.

USB

- When a device is first connected to the USB port, the infotainment system automatically switches to that device. If an auxiliary device has already been connected, press the AUX or CD/AUX button to select the device.
- A low battery condition in a portable media player may not allow the device to connect to the system, or can create communication issues with the device. Verify the device battery state of charge and re-charge or replace as needed.
- Connect the device directly to the USB port if possible. Only use a cable if it is required to connect the device. The use of extension cables can cause communication issues.
- If a cable is required for connection, attempt to connect the device using a different cable; cables can deteriorate over time or become damaged.
- Attempt audio playback from multiple USB devices when diagnosing USB concerns. Device compatibility can vary based on vehicle equipment. If the infotainment system is capable of operating any USB type device, the cause of the concern is not with the vehicle system. The inoperative device(s) may be incompatible or contain no recognised media types.
- If a 'Device Not Supported' or similar type error message is displayed, this indicates the system has connected to the device but cannot communicate with it properly. This does not indicate an issue with the vehicle system. The device may be incompatible, may require a 'reset', or may require an update to its software/firmware.
- If a 'No Supported Data Found' or similar type error message is displayed, this indicates the system has connected to the device and is communicating, but cannot find any compatible files/data. This does not indicate an issue with the vehicle system. Verify the device contains compatible media/ file types.
- Poor connections or damaged USB cables can cause intermittent or no operation of USB devices. Inspect connectors, terminals, and cables for damage and replace components as necessary. Ensure all USB inline connections and connections at components are fully seated and connector position retainers/locks are secure.

Reference Information

Schematic Reference

Radio/Navigation System Schematics

Connector End View Reference

Component Connector End Views

Description and Operation

Radio/Audio System Description and Operation

Electrical Information Reference

- Circuit Testing
- Connector Repairs
- Testing for Intermittent Conditions and Poor Connections
- Wiring Repairs

Scan Tool Reference

Control Module References for scan tool information

Special Tools

EL-50334-50 USB Cable and Adapter Kit

Circuit/System Verification

Auxiliary Audio Input Jack

1. Verify no DTCs are present.
   If any DTCs are present, refer to Diagnostic Trouble Code (DTC) List - Vehicle .
2. Vehicle in Service Mode, radio ON, connect a portable audio playback device to the auxiliary audio input jack. Verify the infotainment system switches to AUX as the audio source.
   If the infotainment system does not switch to AUX as the audio source, refer to Circuit/System Testing.
3. Operate the device to begin audio playback, adjusting the volume on the device if necessary. Verify the audio from the device is heard through the vehicle infotainment system.
   If audio is not heard from the device, attempt to playback audio from another device. If audio cannot be heard from any device connected to the auxiliary audio input jack, refer to Circuit/System Testing.

USB Port

1. Verify no DTCs are present.
   If any DTCs are present, refer to Diagnostic Trouble Code (DTC) List - Vehicle .
2. Inspect the USB port for damage.
   If damage is noted, replace the USB port.
3. Vehicle in Service Mode, radio ON, connect a device to the USB port. Verify the infotainment system switches to USB as the audio source.
   If the infotainment system does not switch to USB as the audio source, refer to Circuit/System Testing.
4. Operate the radio controls to play audio from the device. Verify the audio from the device is heard through the vehicle infotainment system.
   If audio is not heard from the device, attempt to playback audio from another device. If audio cannot be heard from any device connected to the USB port, or the audio

heard is not clear, refer to Circuit/System Testing.

Circuit/System Testing

Auxiliary Audio Input Jack

1. Vehicle OFF, disconnect the X1 harness connector at the X83 auxiliary audio input.
2. Vehicle in Service Mode, radio ON, test for 2.5-3.5 V between the auxiliary detection terminal 5 and ground.
   If less than specified range, test the signal circuit for a short to ground or an open/high resistance. If the circuit tests normal, replace the A11 radio.
   If greater than the specified range, test the circuit for a short to voltage. If the circuit tests normal, replace the A11 radio.
3. Vehicle OFF, disconnect the X1 harness connector at the A11 radio. Test for infinite resistance between the circuits listed below and ground:
   - auxiliary audio common circuit terminal 23
   - left auxiliary audio circuit terminal 24
   - right auxiliary audio circuit terminal 10

   If not the specified value, test the circuit for a short to ground.
4. Test for less than 5 Ω between the A11 radio X1 terminal 24 and the X83 auxiliary audio input X1 terminal 1.
   If greater than the specified value, test the signal circuit for an open/high resistance.
5. Test for less than 5 Ω between the A11 radio X1 terminal 10 and the X83 auxiliary audio input X1 terminal 2.
   If greater than the specified value, test the signal circuit for an open/high resistance.
6. Test for less than 5 Ω between the A11 radio X1 terminal 23 and the X83 auxiliary audio input X1 terminal 3.
   If greater than the specified value, test the signal circuit for an open/high resistance.
7. Reconnect the X1 harness connector at the A11 radio.
8. Vehicle in Service Mode, test for less than 1 V between the circuits listed below and ground:
   - auxiliary audio common circuit X83 auxiliary audio input X1 terminal 3
   - left auxiliary audio circuit X83 auxiliary audio input X1 terminal 1
   - right auxiliary audio circuit X83 auxiliary audio input X1 terminal 2

   If greater than the specified range, test the circuit for a short to voltage. If the circuit tests normal, replace the A11 radio.
9. If all circuits test normal, replace the X83 auxiliary audio input and reconnect all harness connectors. Connect and operate the portable audio playback device. If audio cannot be heard from the device, replace the A11 radio.

USB Port

1. Vehicle OFF, disconnect the USB cable connection at the A11 radio.

   Note: USB cables and adapters for the following tests are found in the *EL-50334-50* USB Cable and Adapter Kit .

2. Connect the EL-50334-1 Type A male to Mini A male USB Cable to the A11 radio.
3. Connect the EL-50334-3 Type A female to Type A female adapter to the EL-50334-1 Cable.

4. Vehicle in Service Mode, radio ON, connect a USB device to the EL-50334-3 adapter. Verify the infotainment system switches to USB as the audio source.
   If the infotainment system does not switch to USB as the audio source, replace the A11 radio.
5. Vehicle OFF, reconnect the vehicle USB cable to the A11 radio.
6. Disconnect the X316 I/P to floor console harness USB connector.

   Note: The EL-50334-3 Type A female to Type A female adapter may be required for the following test.

7. Vehicle in Service Mode, radio ON, connect a USB device to the I/P side of the X316 connector. Verify the infotainment system switches to USB as the audio source.
   If the infotainment system does not switch to USB as the audio source, replace the I/P USB cable assembly.
8. Vehicle OFF, reconnect the X316 harness connector.
9. Disconnect the USB cable at the X83 auxiliary audio input.
10. Connect the EL-50334-4 Type A female to Mini B female adapter to the USB cable.
11. Vehicle in Service Mode, radio ON, connect a USB device to the EL-50334-4 adapter. Verify the infotainment system switches to USB as the audio source.
    If the infotainment system does not switch to USB as the audio source, replace the console USB cable assembly.
12. If all circuits test normal, replace the X83 auxiliary audio input.

Repair Instructions

Perform the Diagnostic Repair Verification after completing the diagnostic procedure.

- Audio Disc Player, USB, Auxiliary In, and Memory Card Receptacle Replacement
- Control Module References for radio replacement, programming and setup

&#169© Copyright Chevrolet. All rights reserved

Cellular Telephone Conversation Partner Does Not Hear You

Diagnostic Instructions

- Perform the Diagnostic System Check - Vehicle prior to using this diagnostic procedure.
- Review Strategy Based Diagnosis for an overview of the diagnostic approach.
- Diagnostic Procedure Instructions provides an overview of each diagnostic category.

Diagnostic Fault Information

Circuit	Short to Ground	Open/High Resistance	Short to Voltage	Signal Performance
Audio Signal Power	1	1	1	1
Audio Signal Low Reference	--	1	1	1
1. Cellular telephone conversation partner does not hear you				

Circuit/System Description

The mobile telephone control module uses the microphone to allow driver communication with the cellular telephone. The cellular telephone is connected to the mobile telephone control module via Bluetooth.

Reference Information

Schematic Reference

Cellular Telephone Schematics

Connector End View Reference

Component Connector End Views

Description and Operation

Cellular Telephone Description and Operation

Electrical Information Reference

- Circuit Testing
- Connector Repairs
- Testing for Intermittent Conditions and Poor Connections
- Wiring Repairs

Scan Tool Reference

Control Module References for scan tool information

Circuit/System Verification

Vehicle ON, observe the scan tool Microphone Signal parameter. The reading should be between 2-5 V.

Circuit/System Testing

1. Vehicle OFF, disconnect the harness connector at the B24 Mobile Phone Microphone.
2. Vehicle OFF, test for less than 10 Ω between outer shield and ground.
   If greater than the specified range, test the outer shield circuit for an open/high resistance. If the circuit tests normal, replace the K82 Mobile Telephone Control Module.
3. Vehicle OFF, test for less than 10 Ω between low reference circuit terminal 2 and ground.
   If greater than the specified range, test the low reference circuit for an open/high resistance. If the circuit tests normal, replace the K82 Mobile Telephone Control Module.
4. Vehicle ON, test for 9-11 V between the signal circuit terminal 3 and ground.
   If greater than the specified range, test the signal circuit for a short to voltage. If the circuit tests normal, replace the K82 Mobile Telephone Control Module.
   If less than the specified range, test the signal circuit for a short to ground or an open/high resistance. If the circuit tests normal, replace the K82 Mobile Telephone Control Module.
5. If all circuits test normal, replace the B24 Mobile Telephone Microphone.

Repair Instructions

Perform the Diagnostic Repair Verification after completing the diagnostic procedure.

- Control Module References for mobile telephone control module replacement, programming and setup
- Mobile Telephone Microphone Replacement

&#169© Copyright Chevrolet. All rights reserved

Cellular Telephone Conversation Partner Cannot Be Heard

Diagnostic Instructions

- Perform the Diagnostic System Check - Vehicle prior to using this diagnostic procedure.
- Review Strategy Based Diagnosis for an overview of the diagnostic approach.
- Diagnostic Procedure Instructions provides an overview of each diagnostic category.

Diagnostic Fault Information

Circuit	Short to Ground	Open/High Resistance	Short to Voltage	Signal Performance
Audio Signal Power	1	1	1	1
Audio Signal Low Reference	--	1	1	1
1. Cellular telephone conversation partner can not be heard				

Circuit/System Description

The mobile telephone control module sends the telephone call via a hardwired signal to the radio. The radio mutes the audio source and transmit the telephone call to the speakers.

Reference Information

Schematic Reference

Cellular Telephone Schematics

Connector End View Reference

Component Connector End Views

Description and Operation

Cellular Telephone Description and Operation

Electrical Information Reference

- Circuit Testing
- Connector Repairs
- Testing for Intermittent Conditions and Poor Connections
- Wiring Repairs

Scan Tool Reference

Control Module References for scan tool information

Circuit/System Verification

1. Vehicle ON, radio ON, adjust the radio balance and fade to each speaker.
   If any speaker does not operate properly, refer to Speaker Malfunction .
2. Vehicle ON, Command the Audio Tone test ON and OFF with the scan tool, verify that a test tone turns ON and OFF.

Circuit/System Testing

Note: You must perform the Circuit/System Verification before proceeding with Circuit/System Testing.

1. Vehicle OFF, disconnect the X1 connector at the K82 Mobile Telephone Control Module and the X1 connector at the A11 Radio.
2. Vehicle ON, test for less than 0.3 V between the audio signal circuit terminal 6 X1 at the K82 Mobile Telephone Control Module and ground.
   If greater than the specified range, test the audio signal circuit for a short to voltage.
3. Vehicle ON, test for less than 0.3 V between the audio signal circuit terminal 15 X1 at the K82 Mobile Telephone Control Module and ground.
   If greater than the specified range, test the audio signal circuit for a short to voltage.
4. Test for infinite resistance between the audio signal circuit terminal 6 X1 at the K82 Mobile Telephone Control Module and ground.
   If less than the specified range, test the audio signal circuit for a short to ground.
5. Test for infinite resistance between the audio signal circuit terminal 15 X1 at the K82 Mobile Telephone Control Module and ground.
   If less than the specified range, test the audio signal circuit for a short to ground.
6. Test for less than 5 Ω between the audio signal circuit terminal 6 X1 at the K82 Mobile Telephone Control Module and the audio signal circuit terminal 20 X1 at the A11 Radio.
   If greater than the specified range, test the audio signal circuit for an open/high resistance.
7. Test for less than 5 Ω between the audio signal circuit terminal 15 X1 at the K82 Mobile Telephone Control Module and the audio signal circuit terminal 6 X1 at the A11 Radio.
   If greater than the specified range, test the audio signal circuit for an open/high resistance.
8. Test for infinite resistance between the shield ground circuit terminal 5 X1 at the K82 Mobile Telephone Control Module and audio signal circuit terminal 6 X1 and the

audio signal circuit terminal 15 X1.
If less than the specified range, test short circuit between each signal circuit and the shield ground circuit.

9. If all circuits test normal, replace the K82 Mobile Telephone Control Module and verify that the customer concern is not still present.
If the customer concern is still present, replace the A11 Radio.

Repair Instructions

Perform the Diagnostic Repair Verification after completing the diagnostic procedure.

Control Module References for mobile telephone control module replacement, programming and setup

&#169© Copyright Chevrolet. All rights reserved

Cellular Telephone Charging Malfunction

Diagnostic Instructions

- Perform the Diagnostic System Check - Vehicle prior to using this diagnostic procedure.
- Review Strategy Based Diagnosis for an overview of the diagnostic approach.
- Diagnostic Procedure Instructions provides an overview of each diagnostic category.

Diagnostic Fault Information

Circuit	Short to Ground	Open/High Resistance	Short to Voltage	Signal Performance
12V Reference	1	1	--	--
Cradle Signal 1	--	--	--	--
Cradle Signal 2	--	--	--	--
Low Reference	--	1	1	--
1. Charging Inoperative				

Circuit/System Description

The mobile telephone control module uses the cradle to charge the cellular telephone.

Reference Information

Schematic Reference

Cellular Telephone Schematics

Connector End View Reference

Component Connector End Views

Description and Operation

Cellular Telephone Description and Operation

Electrical Information Reference

- Circuit Testing
- Connector Repairs
- Testing for Intermittent Conditions and Poor Connections
- Wiring Repairs

Scan Tool Reference

Control Module References

Circuit/System Verification

Vehicle ON, connect the mobile phone to the cradle observe the scan tool Phone in Cradle parameter. The reading should be Yes.

If the reading is No, refer to Connecting Malfunction.
If the reading is Yes, refer to Charging Inoperative.

Circuit/System Testing

Note: You must perform the Circuit/System Verification before proceeding with Circuit/System Testing.

Connecting Malfunction

1. Vehicle OFF, disconnect the X2 connector at the K82 Mobile Telephone Control Module and the X1 connector at the X91 Mobile Telephone Connector.
2. Vehicle ON, test for less than 0.3 V between the signal circuit terminal 13 X2 at the K82 Mobile Telephone Control Module and ground.
   If greater than the specified range, test the signal circuit terminal 13 X2 at the K82 Mobile Telephone Control Module for a short to voltage.
3. Vehicle ON, test for less than 0.3 V between the signal circuit terminal 15 X2 at the K82 Mobile Telephone Control Module and ground.
   If greater than the specified range, test the signal circuit terminal 15 X2 at the K82 Mobile Telephone Control Module for a short to voltage.
4. Vehicle OFF, test for infinite resistance between the signal circuit terminal 13 X2 at the K82 Mobile Telephone Control Module and ground.
   If less than the specified range, test the signal circuit terminal 13 X2 at the K82 Mobile Telephone Control Module for a short to ground.
5. Vehicle OFF, test for infinite resistance between the signal circuit terminal 15 X2 at the K82 Mobile Telephone Control Module and ground.
   If less than the specified range, test the signal circuit terminal 15 X2 at the K82 Mobile Telephone Control Module for a short to ground.
6. Vehicle OFF, test for less than 5 Ω between the signal circuit terminal 13 X2 at the K82 Mobile Telephone Control Module and the signal circuit terminal 10 X1 at the X91 Mobile Telephone Connector.
   If less than the specified range, test the signal circuit terminal 13 X2 at the K82 Mobile Telephone Control Module for an open/high resistance.

7. Vehicle OFF, test for less than 5 Ω between the signal circuit terminal 15 X2 at the K82 Mobile Telephone Control Module and the signal circuit terminal 2 X1 at the X91 Mobile Telephone Connector.
   If less than the specified range, test the signal circuit terminal 15 X2 at the K82 Mobile Telephone Control Module for an open/high resistance.
8. If all circuits test normal, replace the X91 Mobile Telephone Connector and verify that the customer concern is not still present.
   If the customer concern is still present, replace the K82 Mobile Telephone Control Module.

Charging Inoperative

1. Vehicle OFF, disconnect the X1 and X2 connector at the K82 Mobile Telephone Control Module.
2. Vehicle OFF, test for less than 5 Ω between the low reference circuit terminal 2 X1 and ground.
   If greater than the specified range, test the low reference circuit for an open/high resistance. If the circuit tests normal, replace the K82 Mobile Telephone Control Module.
3. Vehicle ON, test for greater than 11 V between the 12 V reference circuit terminal 1 X1 and ground.
   If less than the specified range, test the 12 V reference circuit for a short to ground or an open/high resistance. If the circuit tests normal, replace the K82 Mobile Telephone Control Module.
4. Vehicle ON, test for less than 0.3 V between the low reference circuit terminal 8 X2 at the K82 Mobile Telephone Control Module and ground.
   If greater than the specified range, test the low reference circuit terminal 8 X2 at the K82 Mobile Telephone Control Module for a short to voltage.
5. Vehicle ON, test for less than 0.3 V between the signal circuit terminal 16 X2 at the K82 Mobile Telephone Control Module and ground.
   If greater than the specified range, test the signal circuit terminal 16 X2 at the K82 Mobile Telephone Control Module for a short to voltage.
6. Vehicle OFF, test for infinite resistance between the low reference circuit terminal 8 X2 at the K82 Mobile Telephone Control Module and ground.
   If less than the specified range, test the low reference circuit terminal 8 X2 at the K82 Mobile Telephone Control Module for a short to ground.
7. Vehicle OFF, test for infinite resistance between the signal circuit terminal 16 X2 at the K82 Mobile Telephone Control Module and ground.
   If less than the specified range, test the signal circuit terminal 16 X2 at the K82 Mobile Telephone Control Module for a short to ground.
8. Vehicle OFF, test for less than 5 Ω between the signal circuit terminal 8 X2 at the K82 Mobile Telephone Control Module and the signal circuit terminal 4 X1 at the X91 Mobile Telephone Connector.
   If less than the specified range, test the signal circuit terminal 8 X2 at the K82 Mobile Telephone Control Module for an open circuit/high resistance.
9. Vehicle OFF, test for less than 5 Ω between the signal circuit terminal 16 X2 at the K82 Mobile Telephone Control Module and the signal circuit terminal 8 X1 at the X91 Mobile Telephone Connector.
   If less than the specified range, test the signal circuit terminal 16 X2 at the K82 Mobile Telephone Control Module for an open/high resistance.
10. If all circuits test normal, replace the X91 Mobile Telephone Connector and verify that the customer concern is not still present.
    If the customer concern is still present, replace the K82 Mobile Telephone Control Module.

Repair Instructions

Perform the Diagnostic Repair Verification after completing the diagnostic procedure.

Control Module References for remote control door lock receiver replacement, programming and setup

&#169© Copyright Chevrolet. All rights reserved

Mobile Telephone Microphone Malfunction

Diagnostic Instructions

- Perform the Diagnostic System Check - Vehicle prior to using this diagnostic procedure.
- Review Strategy Based Diagnosis for an overview of the diagnostic approach.
- Diagnostic Procedure Instructions provide an overview of each diagnostic category.

Circuit/System Description

Without Navigation Radio

The mobile telephone control module uses the mobile telephone microphone to allow driver communication with mobile telephone.

With Navigation Radio

The mobile telephone control module and navigation radio use the mobile telephone microphone to allow driver communication with a mobile telephone, as well as to operate the voice recognition guidance feature of the navigation radio.

Reference Information

Schematic Reference

Cellular Telephone Schematics

Connector End View Reference

Component Connector End Views

Description and Operation

Cellular Telephone Description and Operation

Electrical Information Reference

- Circuit Testing
- Connector Repairs
- Testing for Intermittent Conditions and Poor Connections
- Wiring Repairs

Circuit/System Testing

Without Navigation Radio

1. Vehicle OFF, disconnect the harness connector at the B24 Mobile Phone Microphone.
2. Vehicle OFF, test for less than 5 Ω between the low reference circuit terminal 2 and ground.
   If greater than the specified range, test the low reference circuit for an open/high resistance. If the circuit tests normal, replace the K82 Mobile Telephone Control Module.
3. Vehicle ON, test for 9-11 V between the signal circuit terminal 3 and ground.
   If greater than the specified range, test the signal circuit for a short to voltage. If the circuit tests normal, replace the K82 Mobile Telephone Control Module.
   If less than the specified range, test the signal circuit for a short to ground or an open/high resistance. If the circuit tests normal, replace the K82 Mobile Telephone Control Module.
4. If all circuits test normal, replace the B24 Mobile Telephone Microphone.

With Navigation Radio

1. Vehicle OFF, disconnect the X4 harness connector at the navigation radio and the harness connector at the B24 Mobile Phone Microphone.
2. Vehicle OFF, test for less than 5 Ω between the low reference circuit terminal 2 and ground.
   If greater than the specified range, test the low reference circuit for an open/high resistance. If the circuit tests normal, replace the K82 Mobile Telephone Control Module.
3. Vehicle ON, test for 9-11 V between the signal circuit terminal 3 and ground.
   If greater than the specified range, test the signal circuit for a short to voltage. If the circuit tests normal, replace the K82 Mobile Telephone Control Module.
   If less than the specified range, test the signal circuit for a short to ground or an open/high resistance. If the circuit tests normal, replace the K82 Mobile Telephone Control Module.
4. If all circuits test normal, replace the B24 Mobile Telephone Microphone.
   If condition still exists, replace the navigation radio.

Repair Instructions

Perform the Diagnostic Repair Verification after completing the diagnostic procedure.

- Mobile Telephone Microphone Replacement

- Control Module References for mobile telephone control module or navigation radio replacement, programming and setup

&#169© Copyright Chevrolet. All rights reserved

No Global Positioning System (GPS) Reception

Diagnostic Instructions

- Perform the Diagnostic System Check - Vehicle Diagnostic System Check - Vehicle prior to using this diagnostic procedure.
- Review Strategy Based Diagnosis Strategy Based Diagnosis for an overview of the diagnostic approach.
- Diagnostic Procedure Instructions Diagnostic Procedure Instructions provides an overview of each diagnostic category.

Circuit/System Description

The navigation aerial is connected to the radio by a coax cable. The radio supplies 5 V through the centre conductor of the coax cable to power aerial.

Diagnostic Aids

- Inaccurate or aged GPS position concerns which are no longer present may have been due to the temporary loss of GPS signal reception by the vehicle. Conditions such as tunnels or parking structures will restrict the navigation aerial from a clear view of the satellites in the sky and may have caused this temporary data loss.
- The global positioning system (GPS) requires a clear line of sight to the sky to operate properly. In most cases the GPS will not have reception near tall buildings or inside structures.

Reference Information

Schematic Reference

Radio/Navigation System SchematicsRadio/Navigation System Schematics

Connector End View Reference

Component Connector End ViewsComponent Connector End Views

Description and Operation

Radio/Audio System Description and OperationRadio/Audio System Description and Operation

Electrical Information Reference

- Circuit Testing Circuit Testing
- Connector Repairs Connector Repairs
- Testing for Intermittent Conditions and Poor Connections Testing for Intermittent Conditions and Poor Connections
- Wiring Repairs Wiring Repairs

Scan Tool Reference

Control Module ReferencesControl Module References for scan tool information

Special Tools

EL-49903 EL-49903 GM OnStar Aerial Diagnostic Tool Kit

Circuit/System Verification

Note: The following verification requires the vehicle to be outside with an unobstructed view of the southern sky. Allow 5 minutes after turning key on for the GPS satellites to acquire vehicle signal.

1. Verify the Navigation Radio functions while driving the vehicle.
   If the navigation radio does not function, refer to Circuit System Testing.

Circuit/System Testing

1. Ignition OFF, disconnect the navigation aerial coax cable connector at the A11 radio.
2. Connect the EL-49903 EL-49903 to the A11 radio, place the test aerial on the roof of the vehicle.
3. Ignition ON, verify DTC B2462 is not set in the A11 radio.
   If DTC B2462 is set as current, replace the A11 radio.
4. Ignition OFF, disconnect the aerial coax cable from the T4G mobile phone, navigation and digital radio aerial.
5. Perform the coax cable test on the coax cable between the A11 radio and the T4G mobile phone, navigation and digital radio aerial, refer to Component Testing. The coax cable should pass the test.
   If the coax cable does not pass the test, replace the coax cable.
6. Reconnect the navigation aerial coax cable connections at the A11 radio.
7. Ignition ON, test for 4.5-5.5 V between the coax cable centre conductor and the outer shield at the T4G mobile phone, navigation and digital radio aerial.
   If not within the specified range, replace the the A11 radio.
8. If all circuits test normal, replace the T4G mobile phone, navigation and digital radio aerial.

Component Testing

Caution: Refer to Test Probe Caution in the Preface section.

Note: Before testing the coax cable, check the cable exterior for being pinched, cut, damaged, or having loose connections at the components, which can cause reception issues.

To prevent false reading when testing the centre coax terminals, use care not to ground the test probe on the outer housing/shield.

Coax Cable Test

1. Ignition OFF, disconnect the coax cable at both components.
2. Test for less than 5 Ω between both ends of the coax cables centre terminals.
   If greater than the specified range, replace the coax cable
3. Test for less than 5 Ω between both ends of the coax cable outer shield.
   If greater than the specified range, replace the coax cable
4. Test for infinite resistance between the coax cable centre wire and the outer coax shield.
   If less than the specified range, replace the coax cable.

Repair Instructions

Perform the Diagnostic Repair Verification Diagnostic Repair Verification after completing the diagnostic procedure.

- Radio Aerial Base Replacement Radio Aerial Base Replacement
- Control Module References Control Module References for radio replacement, setup, and programming

&#169© Copyright Chevrolet. All rights reserved

Wireless Communication Interface Aerial Malfunction - UHP

Diagnostic Instructions

- Perform the Diagnostic System Check - Vehicle prior to using this diagnostic procedure.
- Review Strategy Based Diagnosis for an overview of the diagnostic approach.
- Diagnostic Procedure Instructions provide an overview of each diagnostic category.

Circuit/System Description

The wireless communication interface aerial is a small fixed aerial connected directly to the mobile telephone control module and is used to send and receive signals from a wireless communication interface enabled mobile telephone. The aerial utilises no cabling and is not external to the vehicle.

In order to use hands-free calling, the mobile telephone must be paired to the vehicle. Up to five devices can be paired to the vehicle at one time, but only one can be connected at any given time. To pair a phone, the customer must know how to operate the wireless communication interface functionality of their phone. The pairing process must only be done one time for each phone, unless that phone's information is deleted. For safety reasons, the pairing process is disabled while the vehicle is moving.

Diagnostic Aids

- The purpose of this diagnostic is to verify the ability of the K82 mobile telephone control module to pair to a wireless communication interface device.
- Before performing this test, verify compatibility of the mobile telephone the customer is attempting to use with the vehicle. Based on the mobile phone's service provider and the manufacturer's implementation of Bluetooth ®, not all phones support all available wireless communication interface functionality.
- If the vehicle passes the following tests and a compatible device is being used, the concern may be due to a device malfunction or an incomplete/improper pairing attempt.
- A wireless communication interface test tool or equivalent can also be used to verify the ability of the customers mobile phones to pair with another device.

Schematic Reference

Cellular Telephone Schematics

Connector End View Reference

Component Connector End Views

Description and Operation

Cellular Telephone Description and Operation

Electrical Information Reference

- Circuit Testing
- Connector Repairs
- Testing for Intermittent Conditions and Poor Connections
- Wiring Repairs

Scan Tool Reference

Control Module References for scan tool information

Circuit/System Verification

1. Verify DTC B2485 is not set.
   If DTC B2485 is set, refer to DTC B2485 .
2. Set up a wireless communication interface test tool or equivalent.
3. Follow the instructions provided in the Vehicle Owners Manual for pairing a device. Verify successful pairing with the test tool.
   If pairing is not successful, repeat the pairing process. If pairing is still not successful, replace the K82 mobile telephone control module.
4. Refer to Diagnostic Aids.

Repair Instructions

Perform the Diagnostic Repair Verification after completing the diagnostic procedure.

Control Module References for mobile telephone control module replacement, setup, and programming

© Copyright Chevrolet. All rights reserved

Radio Controls Malfunction

Diagnostic Instructions

- Perform the Diagnostic System Check - Vehicle prior to using this diagnostic procedure.
- Review Strategy Based Diagnosis for an overview of the diagnostic approach.
- Diagnostic Procedure Instructions provides an overview of each diagnostic category.

Circuit/System Description

The radio/HVAC controls are supplied battery voltage and ground. The radio controls the power state of the controls via a wake up circuit. Communications between the radio controls and the radio are through the CGI serial data circuits.

Communications between the HVAC controls and the HVAC control module are on a separate LIN circuit. The HVAC control module communicates status information to the radio via GMLAN.

Reference Information

Schematic Reference

Radio/Navigation System Schematics

Connector End View Reference

Component Connector End Views

Description and Operation

Radio/Audio System Description and Operation

Electrical Information Reference

- Circuit Testing

- Connector Repairs
- Testing for Intermittent Conditions and Poor Connections
- Wiring Repairs

Scan Tool Reference

Control Module References for scan tool information

Circuit/System Verification

1. Verify no DTCs are set as current.
   If any DTCs are set as current, refer to Diagnostic Trouble Code (DTC) List - Vehicle .
2. Vehicle in Service Mode, radio ON, verify the radio/HVAC controls backlighting illuminates and that all controls perform the correct function.
   If some, but not all, controls operate normally, replace the radio/HVAC control.
   If all controls are inoperative, refer to Circuit/System Testing.

Circuit/System Testing

1. Vehicle OFF, disconnect the harness connector at the A20 radio/HVAC controls.
2. Test for less than 10 Ω between the ground circuit terminal 17 and ground.
   If greater than the specified range, test the ground circuit for an open/high resistance.
3. Test for less than 20 Ω between the data shield circuit terminal 3 and ground.
   If greater than the specified range, test the ground circuit for an open/high resistance. If the circuit tests normal, replace the A11 radio.
4. Verify that a test lamp illuminates between the B+ circuit terminal 10 and ground.
   If the test lamp does not illuminate, test the B+ circuit for a short to ground or an open/high resistance.
5. Vehicle in Service Mode, test for 2.4-2.75 V between the data circuit terminal 1 and ground.
   If less than the specified range, test the data circuit for a short to ground or an open/high resistance. If the circuit tests normal, replace the A11 radio.
   If greater than the specified range, test the data circuit for a short to voltage. If the circuit tests normal, replace the A11 radio.
6. Test for 2.4-2.75 V between the data circuit terminal 2 and ground.
   If less than the specified range, test the data circuit for a short to ground or an open/high resistance. If the circuit tests normal, replace the A11 radio.
   If greater than the specified range, test the data circuit for a short to voltage. If the circuit tests normal, replace the A11 radio.
7. Test for less than 1 V between the wake signal terminal 4 and ground.
   If greater than the specified range, test the signal circuit for a short to voltage. If the circuit tests normal, replace the A11 radio.
8. Test for less than 1 V between the reset signal terminal 15 and ground.
   If greater than the specified range, test the signal circuit for a short to voltage. If the circuit tests normal, replace the A11 radio.
9. Vehicle OFF, reconnect the harness connector at the A20 radio/HVAC controls.
10. Disconnect the X1 harness connector at the A11 radio.
11. Install a DMM between wake signal terminal 13 and ground.

12. Vehicle in Service Mode, verify the DMM reading is 4.5-5.5 V DC.
    If less than the specified range, test the signal circuit for a short to ground or an open/high resistance. If the circuit tests normal, replace the A20 radio/HVAC controls.
    If greater than the specified range, test the signal circuit for a short to voltage. If the circuit tests normal, replace the A20 radio/HVAC controls.
13. Press the power button on the radio controls. Verify the DMM reading is momentarily less than 1 V and returns to 4.5-5.5 V DC each time the power button is pressed
    If not the specified value, replace the A20 radio/HVAC controls.
14. Test for 4.5-5.5 V between the reset signal terminal 27 and ground.
    If less than the specified range, test the signal circuit for a short to ground or an open/high resistance. If the circuit tests normal, replace the A20 radio/HVAC controls.
    If greater than the specified range, test the signal circuit for a short to voltage. If the circuit tests normal, replace the A20 radio/HVAC controls.
15. If all circuits test normal, replace the A20 radio/HVAC controls and reconnect all harness connectors. Vehicle in Service Mode, radio ON, verify the radio/HVAC controls backlighting illuminates and that all controls perform the correct function If the radio/HVAC controls are still inoperative, replace the A11 radio.

Repair Instructions

Perform the Diagnostic Repair Verification after completing the diagnostic procedure.

- Radio Control Assembly Replacement
- Control Module References for radio replacement, setup, and programming.

&#169© Copyright Chevrolet. All rights reserved

Radio Information Display Malfunction - DTC U0257

Diagnostic Instructions

- Perform the Diagnostic System Check - Vehicle prior to using this diagnostic procedure.
- Review Strategy Based Diagnosis for an overview of the diagnostic approach.
- Diagnostic Procedure Instructions provides an overview of each diagnostic category.

Circuit/System Description

The radio info display module is supplied battery voltage and ground. The radio controls the power state of the display through the remote enable circuit, which is also used to control the power state of other infotainment devices. Display backlighting dimming level, and screen touch signal are communicated over the touch data circuits. The radio sends graphical image data to the display via a dedicated video interface cable.

Reference Information

Schematic Reference

Radio/Navigation System Schematics

Connector End View Reference

Component Connector End Views

Description and Operation

Radio/Audio System Description and Operation

Electrical Information Reference

- Circuit Testing
- Connector Repairs
- Testing for Intermittent Conditions and Poor Connections

- Wiring Repairs

Scan Tool Reference

Control Module References for scan tool information

Circuit/System Verification

1. Verify DTC B1265 is not set as current.
   If DTC B1265 is set as current, refer to Diagnostic Trouble Code (DTC) List - Vehicle .
2. Vehicle in Service Mode, radio ON, verify the info display module turns on and information is shown on the display.
   If the info display is inoperative, refer to Circuit/System Testing.

Circuit/System Testing

1. Vehicle OFF, verify the video interface cable is properly connected at the display X2 and radio X5 connections and there is no damage to the cable or connections.
   Perform the appropriate repair or replacement to correct any issues found with the video interface cable or it's connections.
2. Vehicle OFF, disconnect the X1 harness connector at the P17 info display module.
3. Test for less than 10 Ω between the ground circuit terminal 2 and ground.
   If greater than the specified range, test the ground for an open/high resistance.
4. Test for less than 20 Ω between the data shield circuit terminal 7 and ground.
   If greater than the specified range, test the data shield circuit for an open/high resistance. If the circuit tests normal, replace the A11 radio.
5. Verify that a test lamp illuminates between the B+ circuit terminal 1 and ground.
   If the test lamp does not illuminate, test the B+ circuit for a short to ground or an open/high resistance.
6. Vehicle in Service Mode, verify that a test lamp illuminates between the entertainment remote enable circuit terminal 6 and ground.
   If the test lamp does not illuminate, test the remote enable circuit for a short to ground or an open/high resistance. If the circuit tests normal, replace the A11 radio.
7. Test for 2-3 V between the touch screen data high circuit terminal 4 and ground.
   If less than the specified range, test the data circuit for a short to ground or an open/high resistance. If the circuit tests normal, replace the A11 radio.
   If greater than the specified range, test the data circuit for a short to voltage. If the circuit tests normal, replace the A11 radio.
8. Test for 2-3 V between the touch screen data low circuit terminal 8 and ground.
   If less than the specified range, test the data circuit for a short to ground or an open/high resistance. If the circuit tests normal, replace the A11 radio.
   If greater than the specified range, test the data circuit for a short to voltage. If the circuit tests normal, replace the A11 radio.
9. Vehicle OFF, reconnect the harness connector at the P17 info display module.
10. Disconnect the X4 harness connector at the A11 radio.
11. Vehicle in Service Mode, test for 3-5 V between the display reset signal circuit terminal 10 and ground.
    If less than the specified range, test the signal circuit for a short to ground or an open/high resistance. If the circuit tests normal, replace the P17 info display module.
    If greater than the specified range, test the signal circuit for a short to voltage. If the circuit tests normal, replace the P17 info display module.
12. If all circuits test normal, replace the video interface cable. Reconnect all harness connectors.

13. Vehicle in Service Mode, radio ON, verify the info display module turns on and information is shown on the display.
    If the information display still malfunctions, replace the P17 information display module. Vehicle in Service Mode, radio ON, verify the info display module turns on and information is shown on the display. If the information display still malfunctions, replace the A11 radio.

Repair Instructions

Perform the Diagnostic Repair Verification after completing the diagnostic procedure.

- Driver Information Display Replacement
- Control Module References for radio replacement, setup, and programming.

&#169© Copyright Chevrolet. All rights reserved

Radio Poor Reception

Diagnostic Instructions

- Perform the Diagnostic System Check - Vehicle prior to using this diagnostic procedure.
- Review Strategy Based Diagnosis for an overview of the diagnostic approach.
- Diagnostic Procedure Instructions provides an overview of each diagnostic category.

Diagnostic Fault Information

Circuit	Short to Ground	Open/High Resistance	Short to Voltage	Signal Performance
Radio Aerial Coax	B125A 02	B125A 04	1	--
Ground	--	1	--	--
1. May exhibit possible AM/FM interference.				

Circuit/System Description

The AM/FM aerial is part of the multi-band aerial is located on the roof of the vehicle. The radio provides battery voltage to the AM/FM amplifier in the aerial base using the centre conductor of the aerial coaxial cable. When a 12 V signal is seen by the amplifier, both AM and FM signals are amplified.

Reference Information

Schematic Reference

Radio/Navigation System Schematics

Connector End View Reference

Component Connector End Views

Description and Operation

Radio/Audio System Description and Operation

Electrical Information Reference

- Circuit Testing
- Connector Repairs
- Testing for Intermittent Conditions and Poor Connections
- Wiring Repairs

Scan Tool Reference

Control Module References for scan tool information

Circuit/System Verification

Vehicle in Service Mode, radio ON, tune to a strong AM or FM station. Verify that the AM and FM reception is clear.

Circuit/System Testing

1. Vehicle OFF, disconnect the radio aerial coax from the A11 radio and the T4G aerial.
2. Test for infinite resistance between the aerial coax centre terminal and ground.
   If less than the specified value, replace the aerial coax.
3. Test for infinite resistance between the coax centre terminal and the outer shield.
   If less than the specified value, replace the aerial coax.
4. Test for less than 5 Ω on the aerial coax centre circuit from end to end.
   If greater than the specified range, replace the aerial coax.
5. Vehicle in Service Mode, test for less than 1 V between the aerial coax centre terminal and ground.
   If greater than the specified range, replace the aerial coax.
6. Connect the aerial coax to the A11 radio. Test for 12-15 V between the aerial coax centre terminal and ground at the T4G aerial connector.
   If not within the specified range, replace the A11 radio.
7. If all circuits test normal, replace the T4G aerial.

Repair Instructions

Perform the Diagnostic Repair Verification after completing the diagnostic procedure.

- Radio Aerial Base Replacement
- Control Module References for radio replacement, programming and setup

&#169© Copyright Chevrolet. All rights reserved

Speaker Replacement Reference

Component	Repair Instruction
Front Speakers	Refer to Radio Front Side Door Speaker Replacement
Front Tweeter Speakers	Refer to Radio Windscreen Side Garnish Moulding Speaker Replacement
Rear Subwoofer	Refer to Radio Rear Compartment Speaker Replacement
Rear Speakers	Refer to Radio Rear Side Door Speaker Replacement

© Copyright Chevrolet. All rights reserved

Speaker Malfunction

Diagnostic Instructions

- Perform the Diagnostic System Check - Vehicle prior to using this diagnostic procedure.
- Review Strategy Based Diagnosis for an overview of the diagnostic approach.
- Diagnostic Procedure Instructions provides an overview of each diagnostic category.

Circuit/System Description

Each of the audio output channel circuits (+) and (-), at the radio and audio amplifier (if equipped) have a DC bias voltage that is approximately one half of battery voltage. When using a DMM, each of the audio output channel circuits will measure approximately 6.5 V DC. The audio being played on the system is produced by a varying AC voltage that is centred around the DC bias voltage on the same circuit. The AC voltage is what causes the speaker cone to move and produce sound. The frequency (Hz) of the AC voltage signal is directly related to the frequency of the input (audio source playing) to the audio system. Both the DC bias voltage and the AC voltage signals are needed for the audio system to properly produce sound.

Diagnostic Aids

- Improper speaker mounting or loose trim may cause an audible buzz or distortion. Inspect the appropriate speaker and the surrounding interior trim for proper and secure mounting. If the speaker or surrounding interior trim is found to be loose or improperly secured, correctly secure the item.
- When equipped with an amplifier, it is possible for some individual circuit faults to affect more than one speakers operation. Perform diagnostic tests in the sequence listed to avoid misdiagnosis.
- The amplifier control circuit will measure less than 1 V when the mute function is OFF, and approximately 8 V DC when at full mute. When mute is active, the radio stops sending the varying AC voltage to the amplifier/speakers.

Reference Information

Schematic Reference

Radio/Navigation System Schematics

Connector End View Reference

Component Connector End Views

Description and Operation

Radio/Audio System Description and Operation

Electrical Information Reference

- Circuit Testing
- Connector Repairs
- Testing for Intermittent Conditions and Poor Connections
- Wiring Repairs

Scan Tool Reference

Control Module References for scan tool information

Special Tools

EL-50334-50 USB Cable and Adapter Kit

Circuit/System Verification

Without Amplifier

Radio ON, Mute OFF, verify clear audio is heard from each audio speaker.

If audio is inoperative from all speakers, replace the radio.
If audio is inoperative from one or more, but not all, speakers or the audio emitted from the speakers is not clear, refer to Speaker Circuit Malfunction - without Amplifier.

With Amplifier

Radio ON, Mute OFF, verify clear audio is heard from each audio speaker.

If audio is not heard from all speakers, or the audio emitted from the speakers is not clear, refer to Speaker Circuit Malfunction- with Amplifier.

Circuit/System Testing

Speaker Circuit Malfunction - without Amplifier

Note: In the following tests, audio signal frequencies (Hz) will be tested. To prevent misdiagnosis, the door chime must be OFF during testing. Ensure the driver door latch is closed during testing.

1. Vehicle OFF, disconnect the harness connector at the appropriate P19 speaker.
2. Radio ON, mute OFF, test for 5.0-7.5 volts between each audio signal circuit terminal 1 and terminal 2 and ground.
   If less than the specified range, test the signal circuit for a short to ground or an open/high resistance. If the circuit tests normal, replace the radio.
   If greater than the specified range, test the signal circuit for a short to voltage. If the circuit tests normal, replace the radio.
3. Insert the EL-50334-6 Audio Test CD from the *EL-50334-50* USB Cable and Adapter Kit .
4. Play track number three (50 Hz bass test tone) from the test CD. Test for 49-51 Hz AC between each signal circuit terminal 1 and terminal 2 and ground.
   If not the specified value, replace the A11 radio.
5. If all circuits test normal, replace the speaker.

With Amplifier

Note: In the following tests, audio signal frequencies (Hz) will be tested. To prevent misdiagnosis, the door chime must be OFF during testing. Ensure the driver door latch is closed during testing.

1. Vehicle OFF, disconnect the X1 harness connector at the T3 audio amplifier.
2. Test for less than 10 Ω between the ground circuit terminal 8 and ground.
   If greater than the specified range, test the ground circuit for an open/high resistance.
3. Verify that a test lamp illuminates between the B+ circuit terminal 4 and ground.
   If the test lamp does not illuminate, test the B+ circuit for a short to ground or an open/high resistance.
4. Disconnect the X2 harness connector at the T3 audio amplifier.
5. Vehicle in Service Mode, radio ON, verify a test lamp illuminates between the remote enable signal circuit terminal 14 and ground.
   If the test lamp does not illuminate, test the remote enable signal circuit for a short to ground or an open/high resistance. If the circuit tests normal, replace the A11 radio.
6. Radio ON, mute OFF, test for less than 1 V between the amplifier control circuit terminal 12 and ground.
   If greater than the specified range, test the control circuit for a short to voltage. If the circuit tests normal, replace the A11 radio.
7. Mute ON, test for less than 7.5-8.5 V between the amplifier control circuit terminal 12 and ground.
   If less than the specified range, test the control circuit for a short to ground or an open/high resistance. If the circuit tests normal, replace the A11 radio.
   If greater than the specified range, test the control circuit for a short to voltage. If the circuit tests normal, replace the A11 radio.
8. Vehicle OFF, disconnect the X3 harness connector at the T3 audio amplifier.
9. Radio ON, mute OFF, test for 5-7 V between the audio signal circuit terminals listed below and ground:
   - Left front low level audio signal (+) terminal 14
   - Left front low level audio signal (-) terminal 6
   - Right front low level audio signal (+) terminal 5
   - Right front low level audio signal (-) terminal 2

   Left rear low level audio signal (+) terminal 12

-
- Left rear low level audio signal (-) terminal 4
- Right rear low level audio signal (+) terminal 3
- Right rear low level audio signal (-) terminal 11

If less than the specified range, test the signal circuit for a short to ground or an open/high resistance. If the circuit tests normal, replace the A11 radio.
If greater than the specified range, test the signal circuit for a short to voltage. If the circuit tests normal, replace the A11 radio.

10. Insert the EL-50334-6 Audio Test CD from the *EL-50334-50* USB Cable and Adapter Kit .
11. Play track number three (50 Hz bass test tone) from the test CD. Test for 49-51 Hz AC between the audio signal circuit terminals listed below and ground.
    - Left front low level audio signal (+) terminal 14
    - Left front low level audio signal (-) terminal 6
    - Right front low level audio signal (+) terminal 5
    - Right front low level audio signal (-) terminal 2
    - Left rear low level audio signal (+) terminal 12
    - Left rear low level audio signal (-) terminal 4
    - Right rear low level audio signal (+) terminal 3
    - Right rear low level audio signal (-) terminal 11

    If not the specified value, replace the A11 radio.
12. Vehicle OFF, reconnect all harness connectors at the T3 audio amplifier.
13. Disconnect the harness connector at the appropriate P19 speaker.
14. Radio ON, mute OFF, test for 5-7 V between the appropriate speaker signal terminals listed below and ground:
    - Door speakers or front tweeter speakers: speaker control (-) circuit terminal 1
    - Door speakers or front tweeter speakers: speaker control (+) circuit terminal 2
    - Subwoofer speaker control (-) circuit terminal A
    - Subwoofer speaker control (+) circuit terminal B

    If less than the specified range, test the control circuit for a short to ground or an open/high resistance. If the circuit tests normal, replace the T3 audio amplifier.
    If greater than the specified range, test the control circuit for a short to voltage. If the circuit tests normal, replace the T3 audio amplifier.
15. Play track number three (50 Hz bass test tone) from the test CD. Test for 49-51 Hz AC between the appropriate speaker signal circuit terminals listed below and ground.
    - Door speakers or front tweeter speakers: speaker control (-) circuit terminal 1
    - Door speakers or front tweeter speakers: speaker control (+) circuit terminal 2
    - Subwoofer speaker control (-) circuit terminal A
    - Subwoofer speaker control (+) circuit terminal B

    If not the specified value, replace the T3 audio amplifier.
16. If all circuits test normal, replace the appropriate P19 speaker.

Repair Instructions

Perform the Diagnostic Repair Verification after completing the diagnostic procedure.

- Speaker Replacement Reference
- Control Module References for amplifier or radio replacement, setup, and programming

&#169© Copyright Chevrolet. All rights reserved

Mobile Telephone Microphone Replacement

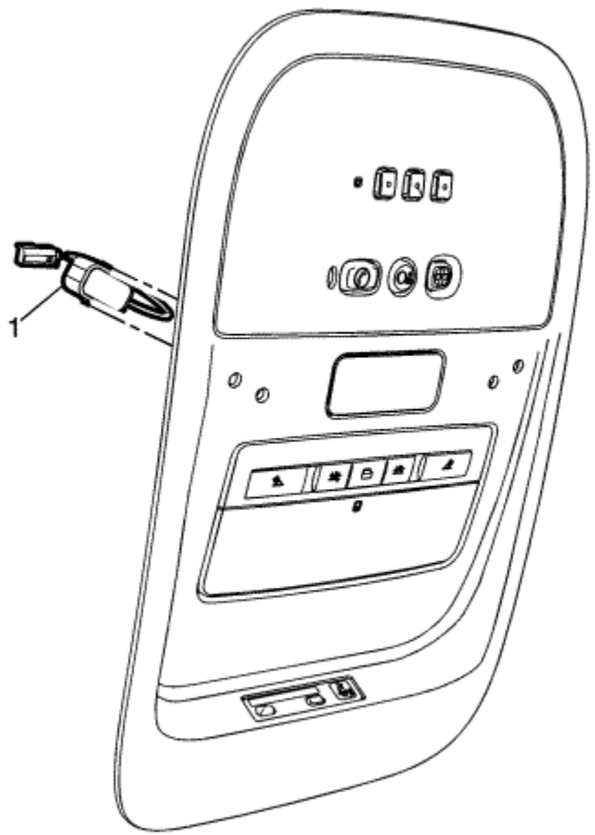

Callout	Component Name
Preliminary Procedure Remove the roof console. Refer to Roof Console Replacement .	
	Mobile Telephone Microphone

1	**Procedure** Disconnect the electrical connector.

© Copyright Chevrolet. All rights reserved

Communication Centre Call Switch Replacement

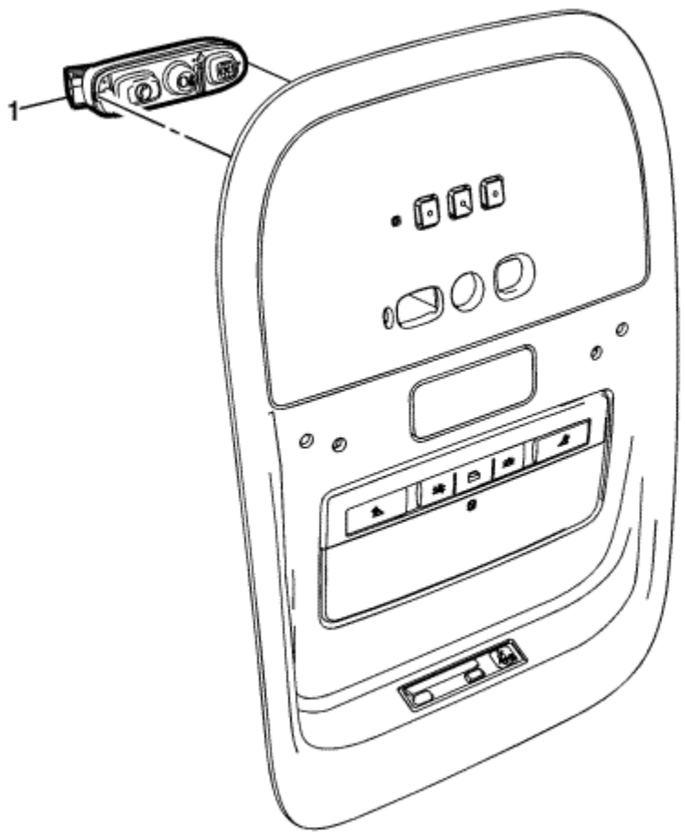

Callout	Component Name
Preliminary Procedure Remove the roof console. Refer to Roof Console Replacement .	
	Communication Centre Call Switch

1	**Procedure** Disconnect the electrical connector.

© Copyright Chevrolet. All rights reserved

Communication Interface Module Replacement

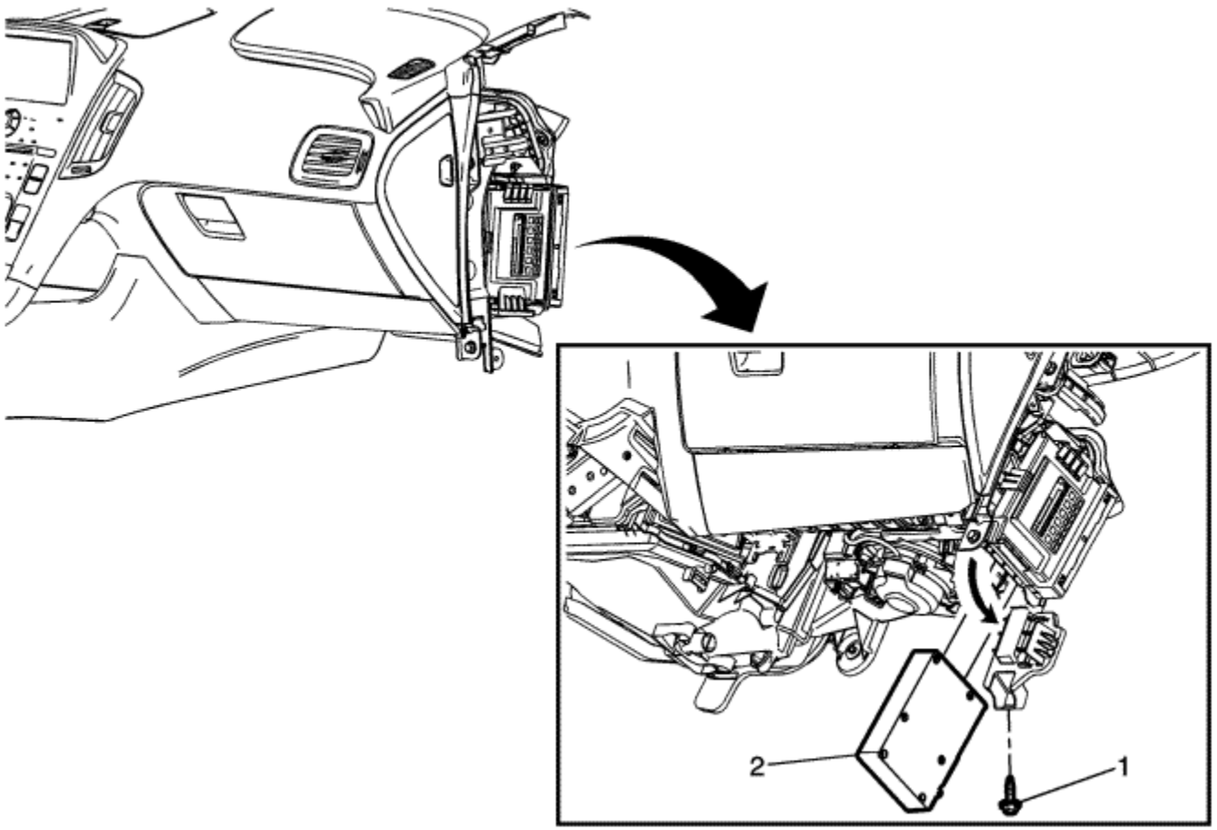

Callout	Component Name
Preliminary Procedure	
1. Disconnect the battery negative cable. Refer to Battery Negative Cable Disconnection and Connection . 2. Remove the instrument panel lower trim panel insulator. Refer to Instrument Panel Lower Trim Panel Insulator Replacement	

1	Communication Interface Module Bracket Bolt **Caution:** Refer to Fastener Caution in the Preface section.
2	Communication Interface Module **Procedure** 1. Open the bottom of the hinged bracket and slide the module downward. 2. Disconnect the electrical connections. 3. If replacing the communication interface module be sure to transfer wireless communication interface aerial, if equipped. 4. For programming and set up procedures, refer to Control Module References

© Copyright Chevrolet. All rights reserved

Wireless Communication Interface Antenna Replacement

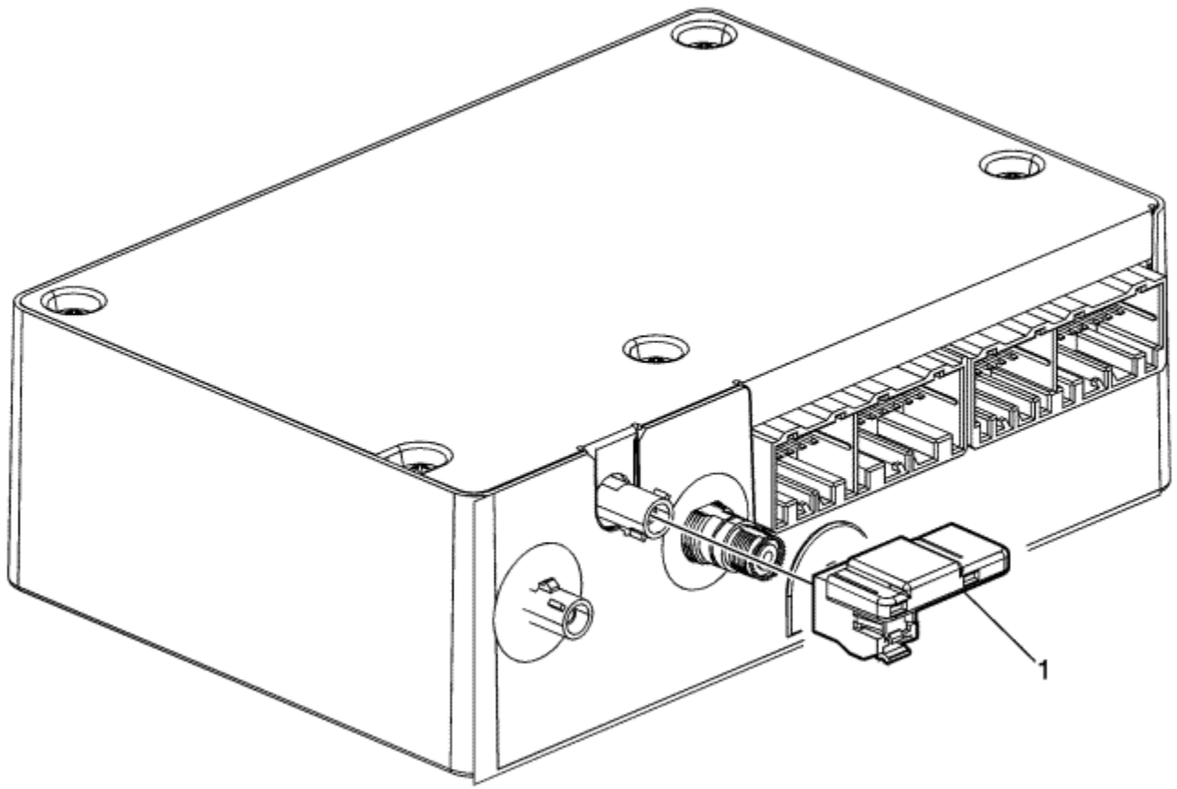

Callout	Component Name
Preliminary Procedure Remove the communication interface module. Refer to Communication Interface Module Replacement	
	Wireless Communication Interface Aerial Bluetooth Module

1	**Procedure** Unsnap the Aerial from Communication Module.

© Copyright Chevrolet. All rights reserved

Communication Interface Module Bracket Replacement

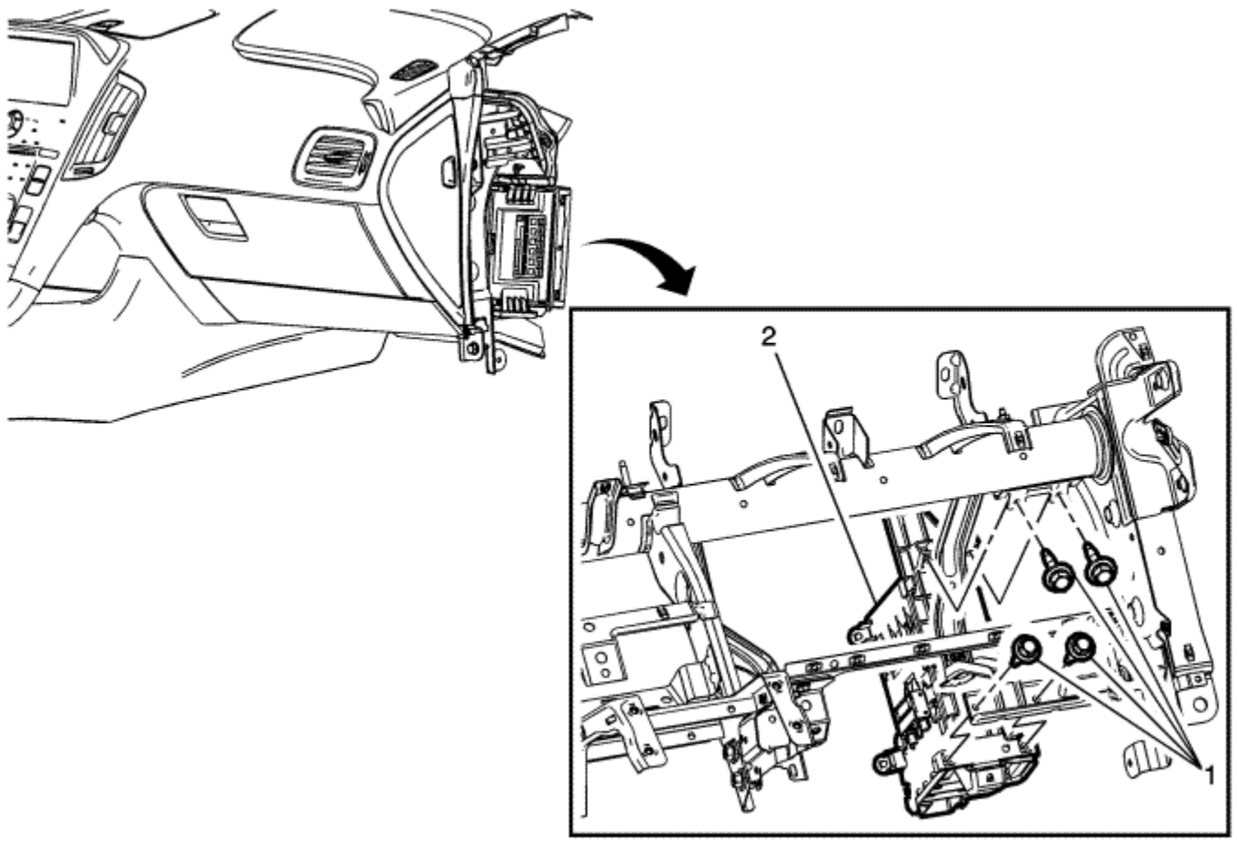

Callout	Component Name
Preliminary Procedure 1. Disconnect the battery negative cable. Refer to Battery Negative Cable Disconnection and Connection . 2. Remove the instrument panel tie bar. Refer to Instrument Panel Tie Bar Replacement .	

1	Communication Interface Module Bracket Bolts (Qty: 4) **Caution:** Refer to Fastener Caution in the Preface section.
2	Communication Interface Module Bracket **Procedure** 1. Disconnect the electrical connector. 2. Transfer components as necessary.

© Copyright Chevrolet. All rights reserved

Radio Replacement

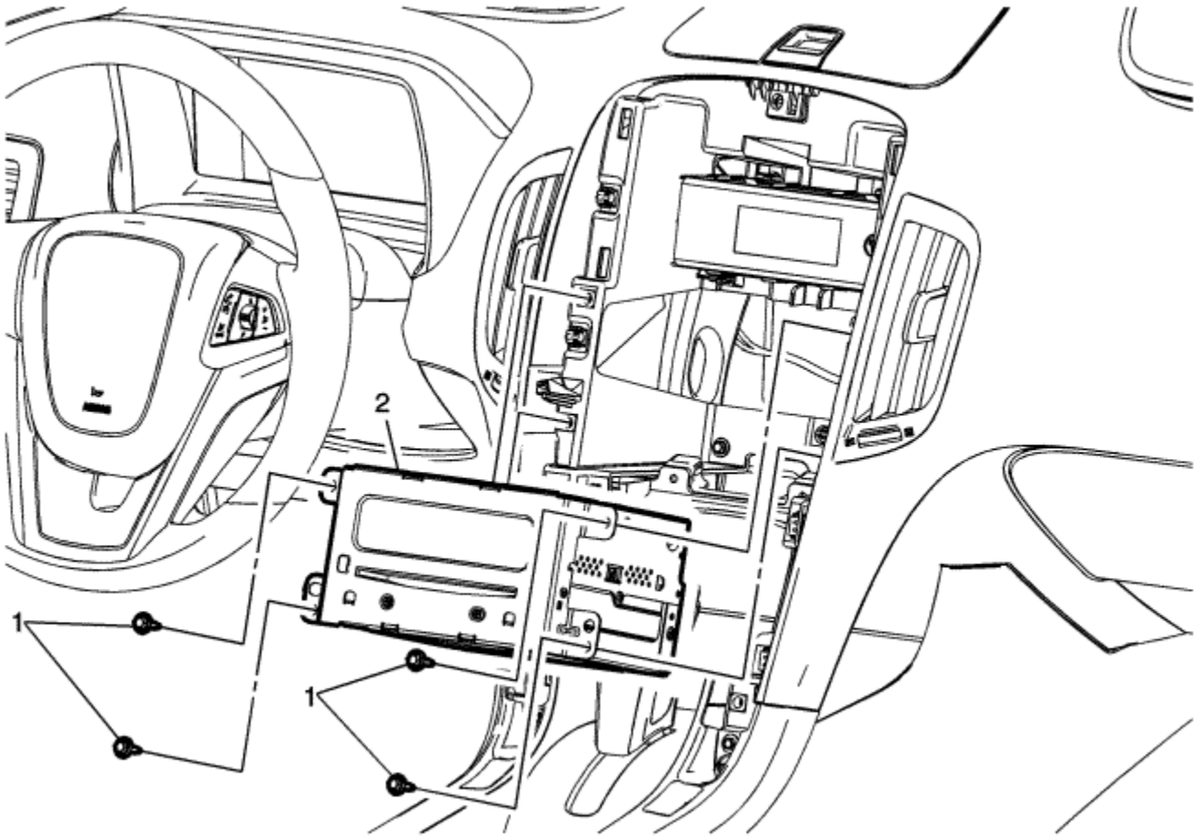

Callout	Component Name
Preliminary Procedure 1. Disconnect the battery negative cable. Refer to Battery Negative Cable Disconnection and Connection . 2. Remove the radio control assembly. Refer to Radio Control Assembly Replacement .	

1	Radio Screw (Qty: 4) **Caution:** Refer to Fastener Caution in the Preface section. **Tighten** 2.5 N·m (22 lb in)
2	Radio Assembly **Procedure** 1. Disconnect the electrical connections. 2. Refer to Control Module References for programming and setup information.

© Copyright Chevrolet. All rights reserved

Radio Control Assembly Replacement

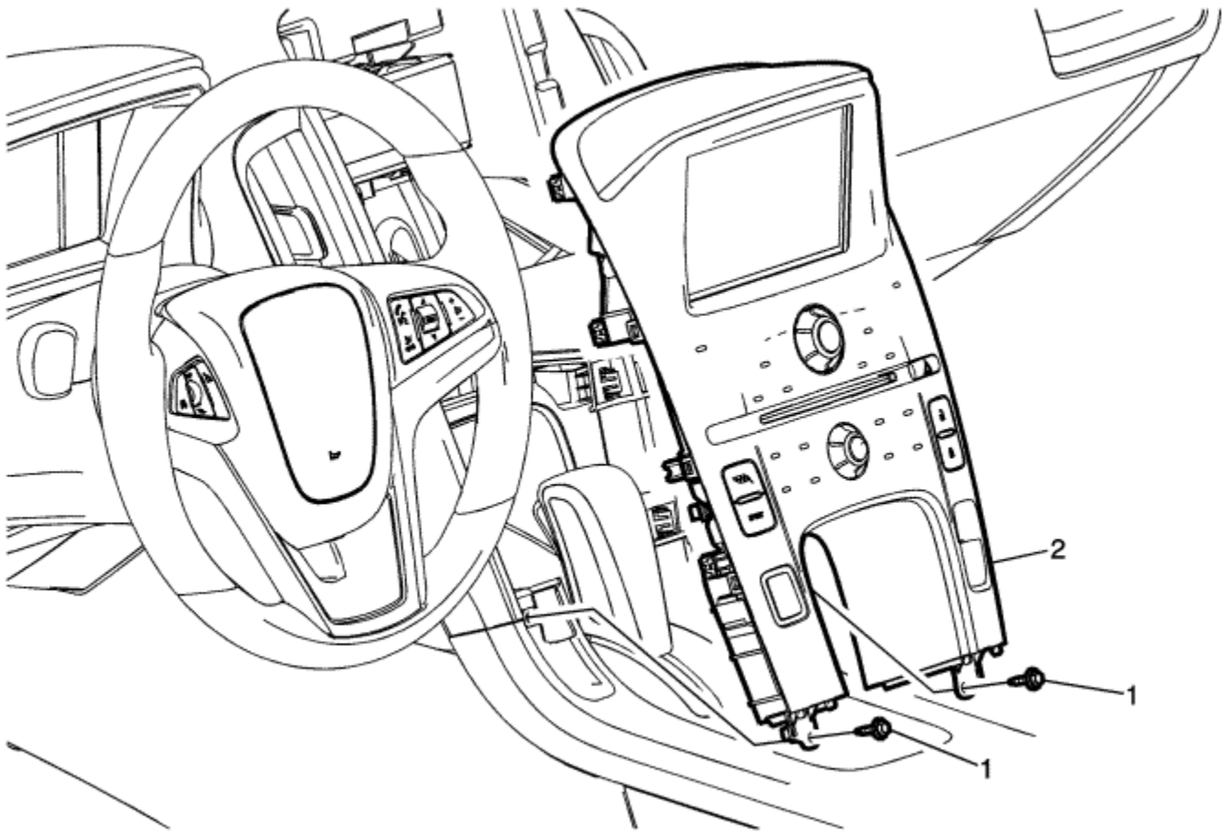

Callout	Component Name
Preliminary Procedure 1. Disconnect the battery negative cable. Refer to Battery Negative Cable Disconnection and Connection . 2. Remove the front floor console applique. Refer to Front Floor Console Applique Replacement	

1	Radio Control Assembly Fastener(Qty: 2) **Caution:** Refer to Fastener Caution in the Preface section.
2	Radio Control Assembly **Procedure** 1. Use a flat-bladed plastic trim tool in order to release the retainer clips securing the radio control assembly to the instrument panel. 2. Disconnect the electrical connections. 3. When replacing the radio control assembly, transfer components as necessary.

© Copyright Chevrolet. All rights reserved

Audio Disc Player, USB, Auxiliary In, and Memory Card Receptacle Replacement

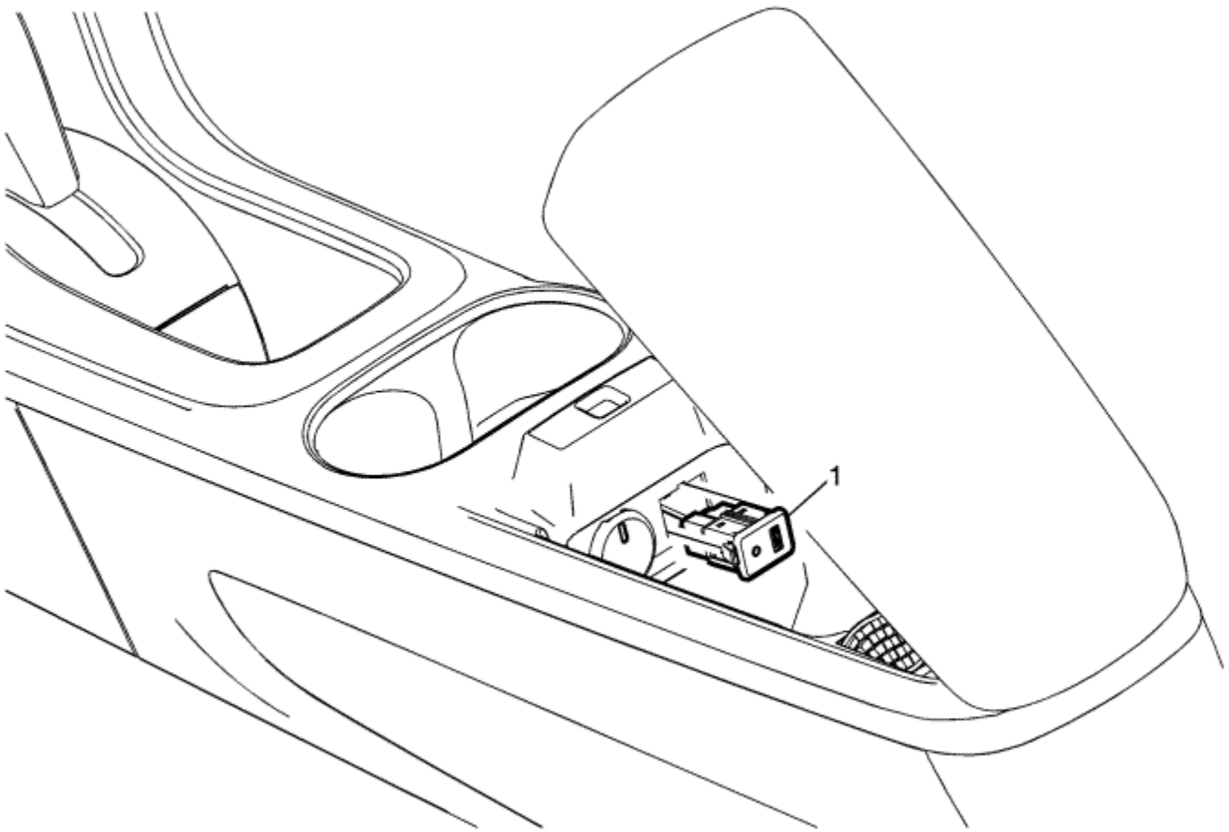

Callout	Component Name
Preliminary Procedure Remove the front floor console. Refer to Front Floor Console Replacement	
	Audio Disc Player and USB and Auxiliary In and Memory Card Receptacle

1	**Procedure** 1. Depress the tabs to remove the receptacle. 2. Disconnect the electrical connector.

© Copyright Chevrolet. All rights reserved

Radio Speaker Amplifier Replacement

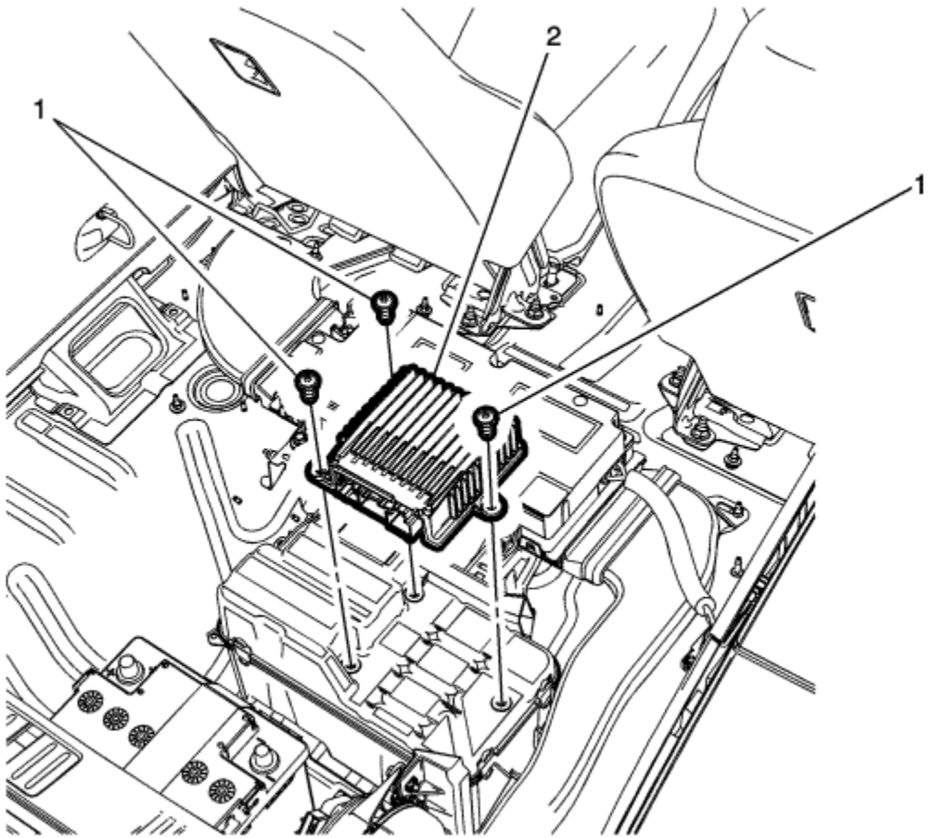

Callout	Component Name
Preliminary Procedure Remove the rear compartment floor stowage trim compartment. Refer to Rear Compartment Floor Stowage Trim Compartment Replacement .	
1	Radio Speaker Amplifier Bolt (Qty: 3)

	Caution: Refer to Fastener Caution in the Preface section.
2	Radio Speaker Amplifier **Procedure** Disconnect the electrical connectors.

© Copyright Chevrolet. All rights reserved

Navigation Signal Splitter Replacement

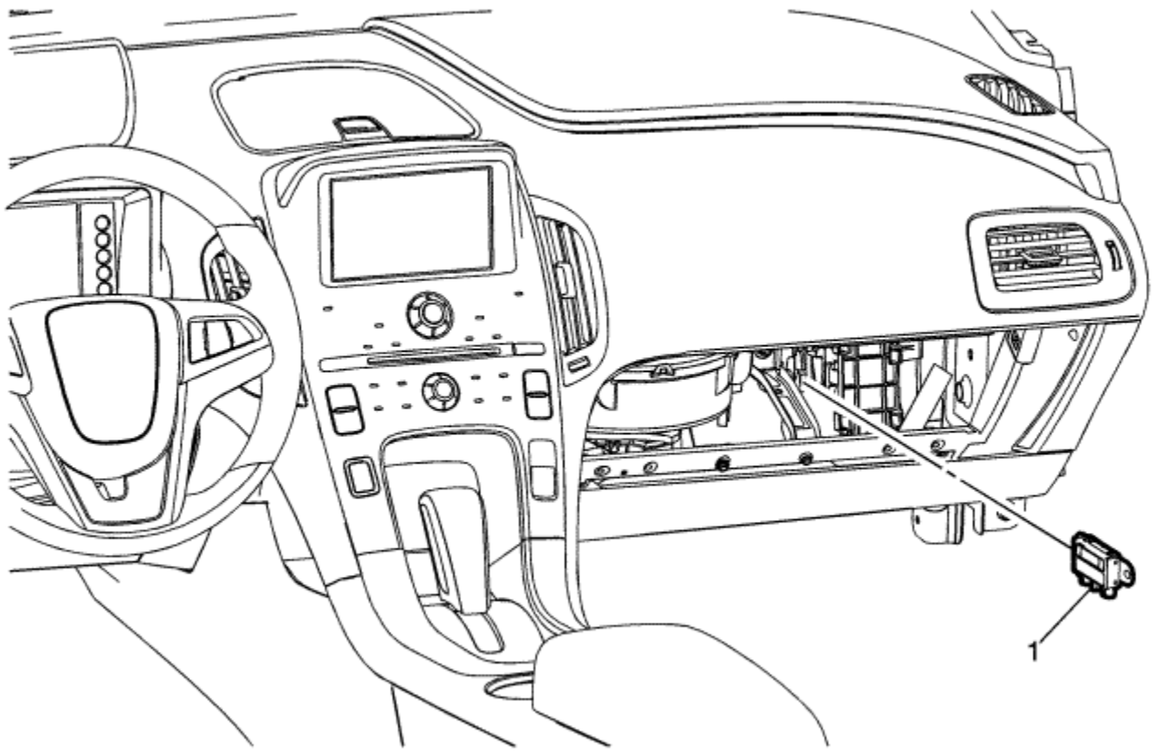

Callout	Component Name
Preliminary Procedure 1. Remove the instrument panel lower compartment. Refer to Instrument Panel Lower Compartment Replacement . 2. Remove the instrument panel lower trim panel insulator. Refer to Instrument Panel Lower Trim Panel Insulator Replacement .	

	Navigation Signal Splitter
1	**Procedure** Disconnect the electrical connection.

© Copyright Chevrolet. All rights reserved

Radio Aerial Base Replacement

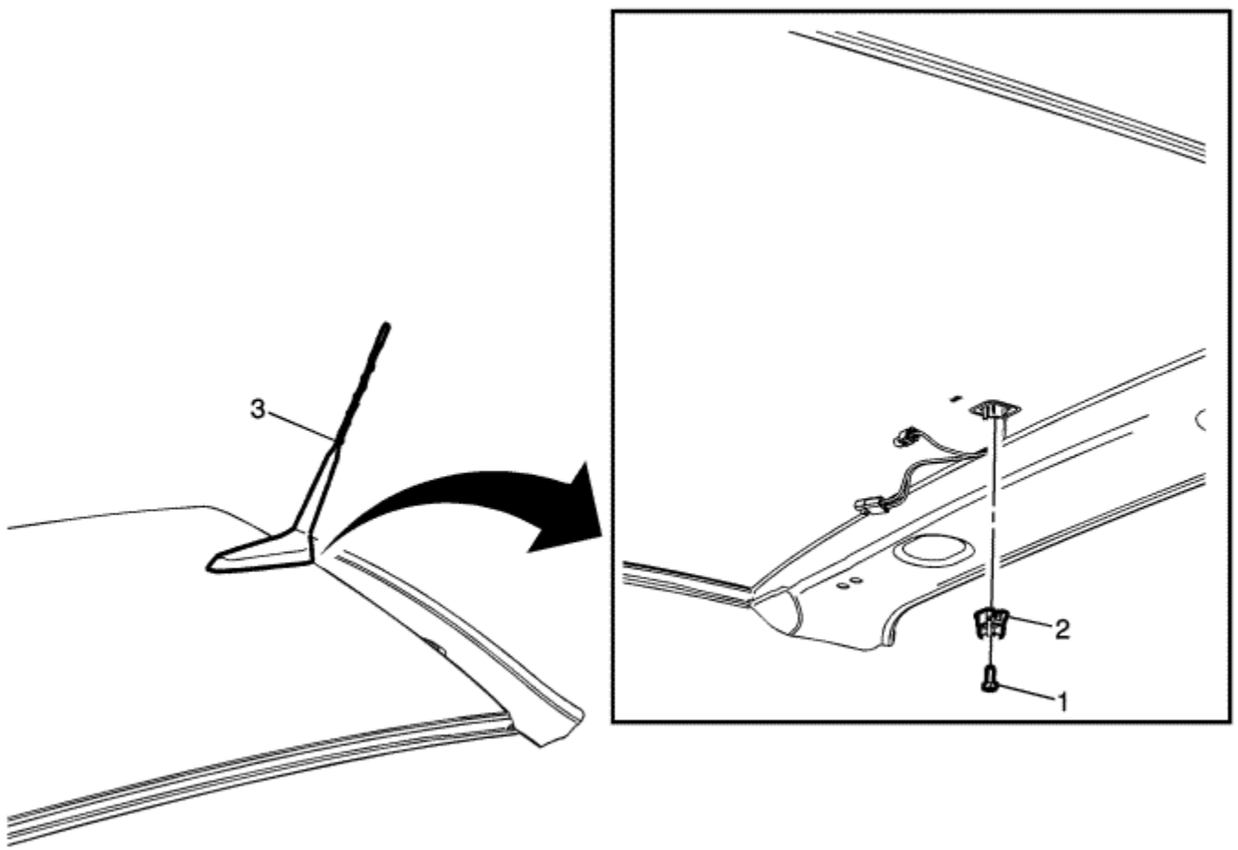

Callout	Component Name
Preliminary Procedure Lower the rear of the headlining trim panel. Refer to Headlining Trim Panel Replacement .	
1	Radio Antenna Base Fastener

	Caution: Refer to Fastener Caution in the Preface section.
2	Radio Aerial Base Retainer **Procedure** Use a new retainer.
3	Radio Aerial Base Assembly **Procedure** Disconnect the electrical connectors.

© Copyright Chevrolet. All rights reserved

Radio Aerial Replacement

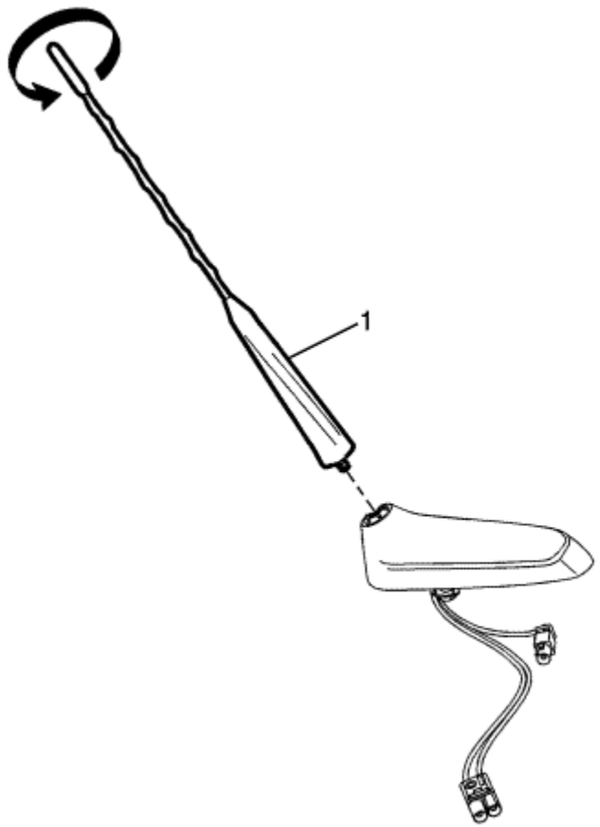

Callout	Component Name
1	Radio Aerial **Procedure** Rotate the mast anticlockwise in order to release the mast from the aerial base.

© Copyright Chevrolet. All rights reserved

Radio and Telephone Control Switch Replacement

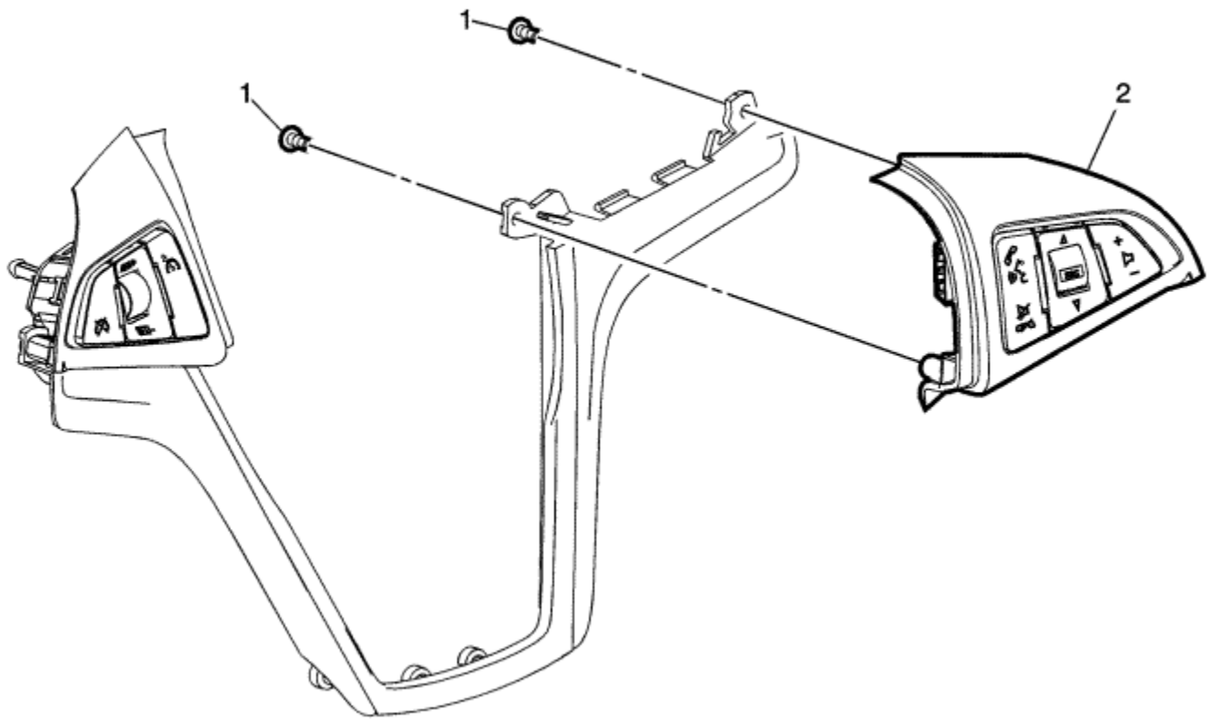

Callout	Component Name
Preliminary Procedure 1. Disconnect the battery negative cable. Refer to Battery Negative Cable Disconnection and Connection . 2. Remove the steering wheel lower cover. Refer to Steering Wheel Spoke Lower Cover Replacement .	

1	Steering Wheel Lower Cover Fastener (Qty: 2) **Caution:** Refer to Fastener Caution in the Preface section.
2	Radio and Telephone Control Switch Assembly **Procedure** Disconnect the electrical connector.

© Copyright Chevrolet. All rights reserved

Radio Windscreen Side Garnish Moulding Speaker Replacement

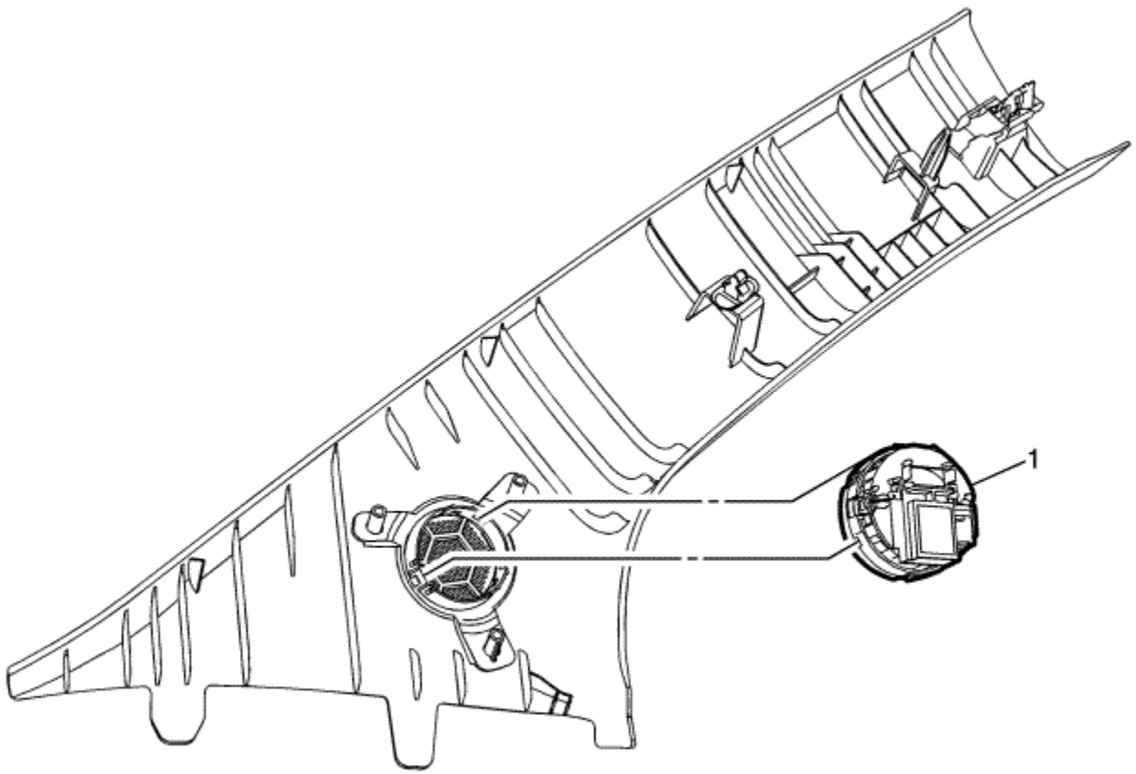

Callout	Component Name
Preliminary Procedure Remove the windshield side garnish molding. Refer to Windscreen Side Garnish Molding Replacement .	
	Radio Windscreen Side Garnish Moulding Speaker

1	**Procedure** 1. Disconnect the electrical connector. 2. Depress tabs to remove speaker.

© Copyright Chevrolet. All rights reserved

Radio Front Side Door Speaker Replacement

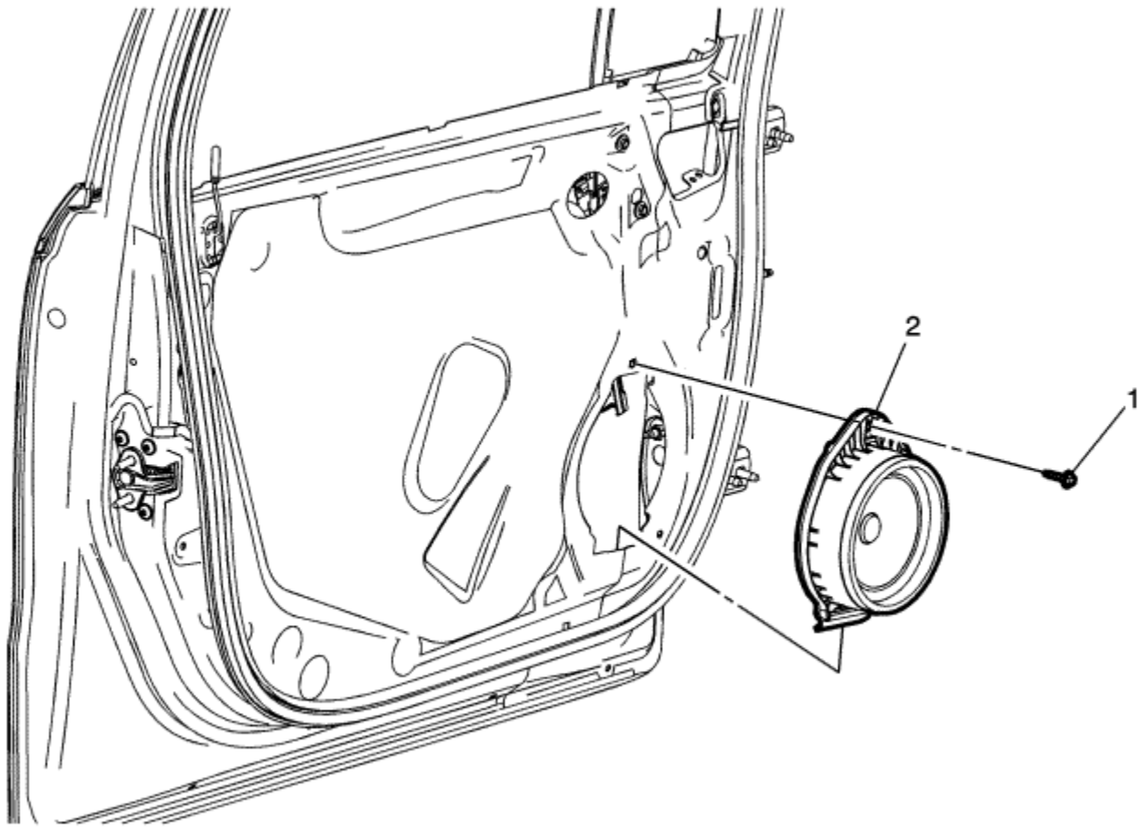

Callout	Component Name
Preliminary Procedure Remove the front side door trim. Refer to Front Side Door Trim Replacement .	
1	Radio Front Side Door Speaker Bolt/Screw

	Caution: Refer to Fastener Caution in the Preface section.
2	Radio Front Side Door Speaker **Procedure** Disconnect the electrical connector.

© Copyright Chevrolet. All rights reserved

Radio Rear Side Door Speaker Replacement

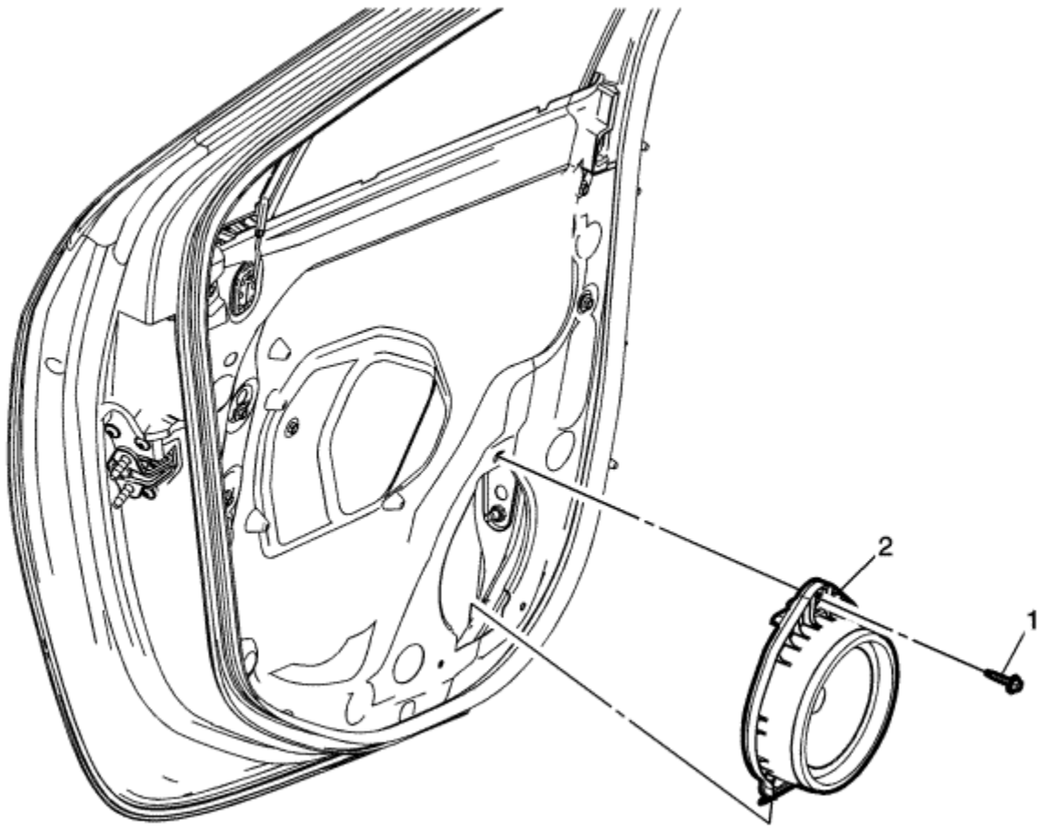

Callout	Component Name
Preliminary Procedure Remove the rear side door trim. Refer to Rear Side Door Trim Replacement .	
1	Radio Rear Side Door Speaker Screw

	Caution: Refer to Fastener Caution in the Preface section.
2	Radio Rear Side Door Speaker **Procedure** Disconnect the electrical connectors.

© Copyright Chevrolet. All rights reserved

Radio Rear Compartment Speaker Replacement

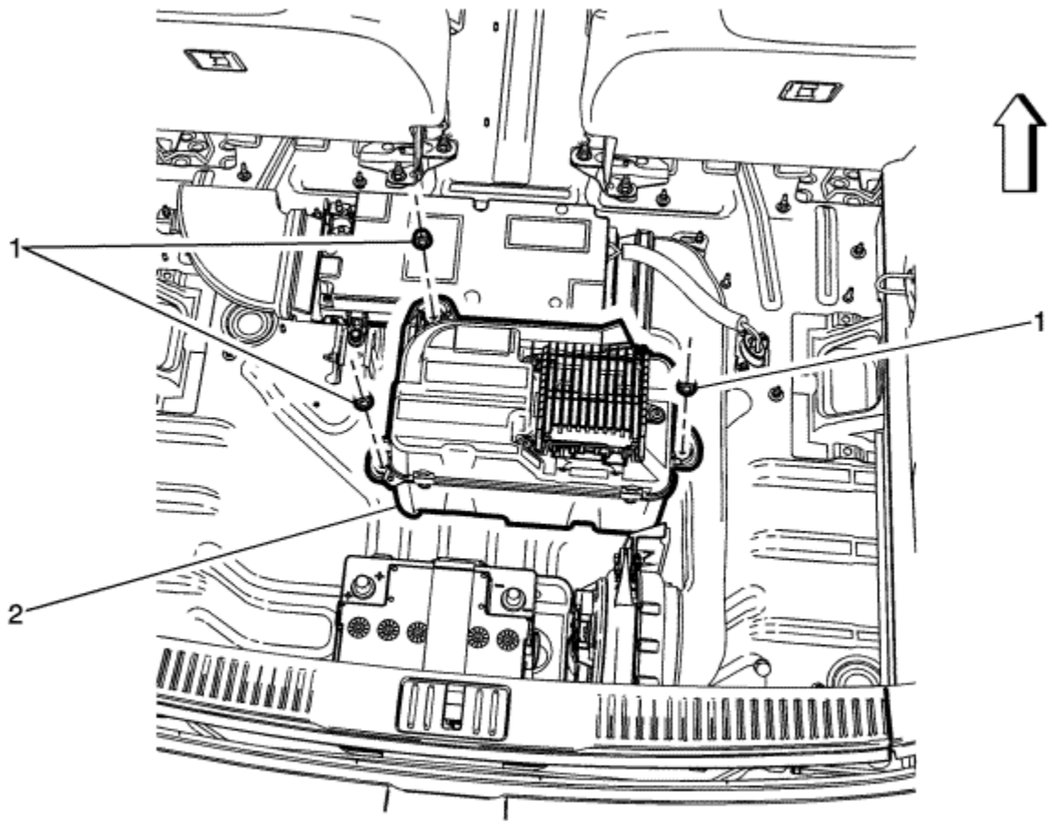

Callout	Component Name
Preliminary Procedure 1. Disconnect the battery negative cable. Refer to Battery Negative Cable Disconnection and Connection . 2. Remove the rear compartment floor stowage compartment trim. Refer to Rear Compartment Floor Stowage Trim Compartment Replacement .	

1	Radio Rear Compartment Speaker Nut (Qty: 3) **Caution:** Refer to Fastener Caution in the Preface section. **Tighten** 6 N·m (53 lb in)
2	Radio Rear Compartment Speaker **Procedure** 1. Unclip wire harnesses. 2. Disconnect the electrical connection. 3. Transfer the amplifier.

© Copyright Chevrolet. All rights reserved

Cellular Telephone Description and Operation

The mobile telephone control module offers the opportunity to hold phone conversations using a cellular telephone via a vehicle microphone and vehicle speaker system and to operate the most important cellular telephone functions via the infotainment system in the vehicle. The mobile telephone control module provides the features listed below:

- Call lists
- Call handling
- Steering wheel control
- Status messages
- Phone book
- Bluetooth
- Speech recognition, including adaptive echo and noise reduction algorithm

An additional base plate and cradle is available for specific cellular telephones, available as an option. It provides charging of the cellular telephone and a connection to the outside antenna. All cellular telephone interaction and data transmission to mobile telephone control module is done via Bluetooth. In order to create a connection between the mobile telephone control module and the infotainment system, the mobile telephone control module must be switched on and the cellular telephone logged in. The mobile telephone control module switches itself on and off via the ignition. If the ignition is switched off the mobile telephone control module can be switched on and off via the infotainment system. When a telephone connection is active, the radio sound is switched off. When the telephone connection has ended, the radio sound is switched on again.

Speech Recognition

The speech recognition enables the operation of some cellular telephone functions by voice input. It recognises commands and sequences of numbers independently of the person speaking. The commands and sequences of numbers can be spoken without a break between the individual words. It is also possible to save telephone numbers using a name randomly chosen by the user. The telephone connection can be created using the proper name.

&#169© Copyright Chevrolet. All rights reserved

Radio/Audio System Description and Operation

The entertainment system on this vehicle may have several different configurations available to it. To determine the specific configuration of the vehicle, please see the Service Parts ID Label, and refer to RPO Code List .

Each item in the list below represents topics covered in detail below.

- Radio Circuit Operation
- Radio/HVAC Communications
- Radio/HVAC Controls
- Aerial System
- AM/FM Reception
- Speaker Operation
- Audio Amplifier (If equipped)
- Radio Data System (RDS)
- Theft Deterrent
- Steering Wheel Controls (If equipped)
- Auxiliary Audio Input Jack (If equipped)
- USB Port (If equipped)
- Auto Volume Control
- Navigation System Components and Features (if equipped)

Radio Circuit Operation

Radio Power

The radio does not use a discrete ignition feed circuit for power moding. The power mode master provides the system power mode to the radio via serial data messages. The power mode master determines the system power mode by processing power mode information from ignition switch inputs. Serial data power modes supported by the radio are OFF, ACCESSORY, RUN, and CRANK REQUEST.

Radio Grounds

The vehicle harness provides a ground for the radio circuits. The radio may also be case grounded.

Radio Data Link Communication

The radio communicates with other modules via serial data.

Radio Audio Outputs

Each of the audio output channel circuits (+) and (-), at the radio have a DC bias voltage that is approximately one half of battery voltage. The audio being played on the system is produced by a varying AC voltage that is centred around the DC bias voltage on the same circuit. The AC voltage is what causes the speaker cone to move and produce sound. The frequency (Hz) of the AC voltage signal is directly related to the frequency of the input (audio source playing) to the audio system. Both the DC bias voltage and the AC voltage signals are needed for the audio system to properly produce sound.

Remote Enable Output

The remote enable circuit is a discrete 12 V signal supplied to infotainment system components when the radio is producing audio, needs the front display on, needs video entertainment system components on, or needs to produce chimes. This signal is used to control the power state of the components. There is no output on radio the remote enable circuit when the vehicle is in the CRANK powermode, this is to minimise current consumption from the attached modules and also to avoid audio pops during crank events.

Navigation Radio Communications Diagram

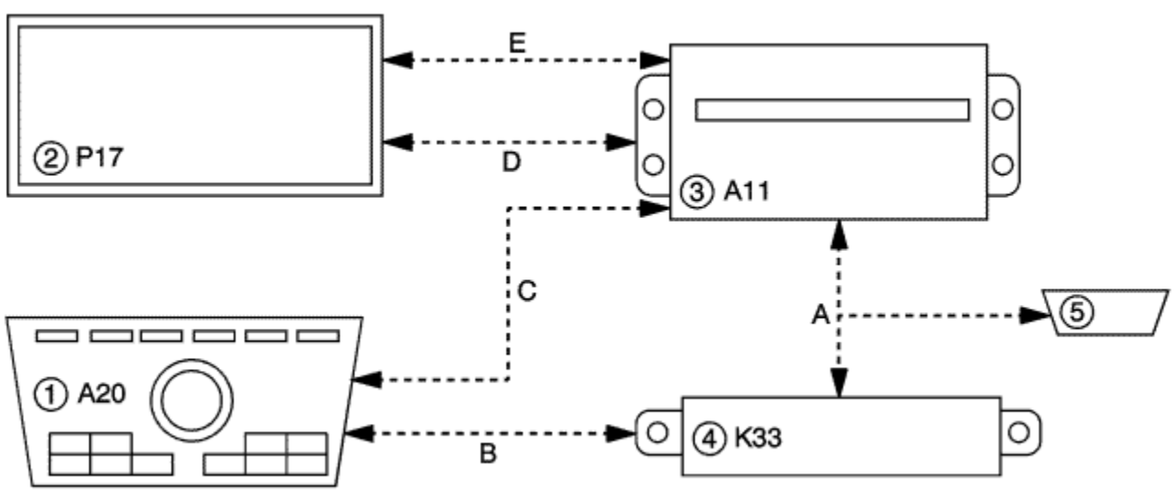

(1) Radio/HVAC Controls
(2) Info Display Module

(3) Radio
(4) HVAC Control Module
(5) Data Link Connector
(a) GMLAN
(b) Local Interconnect Network
(c) CAN Graphical Interface
(d) Digital Video
(e) Touch Screen Serial Data

Info Display Module

The info display module has continuous power and ground. When the radio is on, a discrete 12 V signal is supplied on the remote enable circuit to the colour display module. This signal is used to control the power state of the module, which is active when the signal is high and inactive when the signal is low.

The info display module receives digital video data from the radio for on-screen display information through the video signal circuits. The radio communicates with the info display module over the touch screen serial data circuits for touch screen inputs and back lighting dimming level.

Radio/HVAC Controls

The radio/HVAC controls communicate radio control inputs directly to the radio through the CAN Graphical Interface (CGI) data circuits. After receiving the message the radio will perform the requested function. Messages communicated between the radio and the radio/HVAC controls include the following:

- Button presses/knob rotations
- Commands for the state of indicators
- Radio control back lighting

HVAC data for controls and status indicators is communicated between the radio/HVAC controls and the HVAC control module with a separate LIN serial data circuit. HVAC status screen information from the HVAC control module is transmitted to the radio on the GMLAN serial data circuit. The radio then displays the desired screen information on the info display using the video data circuits.

Aerial System

Multi-Band Aerial

The multi-band antenna is located on the roof of the vehicle. This type of aerial may be used with the AM/FM radio, but is primarily for OnStar® mobile and GPS signals and the XM™ Satellite Radio Service System, if the vehicle has these features. Keep this aerial clear of snow and ice build up for clear reception. If the vehicle has a sunroof, the performance of the system may be affected if the sunroof is open. Loading items onto the roof of the vehicle can interfere with the performance of the system, ensure the multi-band aerial is not obstructed.

Active Aerial

The active aerial system uses two integral aerials applied as appliqués to the rear glass. Each aerial is part of the rear window and looks similar to the demister grid. One aerial receives AM signals while the other aerial receives FM signals. Any damage to the aerial requires replacing the glass.

The radio aerial module is enabled when the radio is turned on. The radio provides battery voltage to the aerial module using the centre conductor of the aerial coaxial cable. This DC voltage does not affect the incoming radio signal. When a 12 V signal is seen by the module on the centre conductor of the aerial coax, both AM and FM signals are amplified.

AM/FM Reception

Radio Signal

The radio signal is sent from a broadcast station and is then received by an aerial. The strength of the signal received depends on the following:

- The power output (wattage) of the broadcasting station
- The location of the vehicle (or receiver) relative to the broadcast tower.
- Obstacles between the tower and the receiver
- Atmospheric conditions
- What band (AM or FM) the station is broadcasting
- Type of aerial and the ground plane

AM Reception

The AM band has a lower frequency range than the FM band. These longer wavelengths:

- Bend around Obstacles
- Follow the curvature of the ground
- May reflect off the ionosphere (skip)

The AM frequencies have longer range due to the ground wave. The ground wave follows the curvature of the ground and is effected by its conductivity. Greater conductivity equates to less signal loss thus transmission over water is better than over land. The AM band has a range of 80-320 km (50-200 miles).

FM Reception

The shorter wavelengths of the higher frequency FM band:

- Reflect off obstacles
- Are absorbed by the ground
- Penetrate the ionosphere

Broadcasts in the FM band are limited to line of sight reception which is typically 40 km (25 miles). Even when out of a direct line of sight, the signal may be reflected into areas that would be in a shadow otherwise. Factors which affect the line of sight include:

- Height of the broadcast aerial
- Height of the receiving aerial
- Terrain and buildings in the broadcast path

Speaker Operation

Speakers turn electrical energy into mechanical energy to move air, using a permanent magnet and an electromagnet. The electromagnet is energised when the radio or amplifier (if equipped) delivers current to the voice coil on the speaker. The voice coil will form a north and south pole that will cause the voice coil and the speaker cone to move in relation to the permanent magnet. The current delivered to the speaker is rapidly changing alternating current (A/C). This causes the speaker cone to move in two directions producing sound.

Audio Amplifier (If equipped)

Amplifier Interface

A fused battery voltage circuit provides the main amplifier power. A switched 12 V output from the radio is used to control the power - state of the amplifier. To respond quickly to audio input and control signals, the amplifier is ON in all vehicle power modes except OFF and CRANK Request. The internal amplifier bridges are fully powered and unmuted when the amplifier receives the switched 12 V input.

Amplifier Operation

The purpose of the amplifier is to increase the power of a voltage or current signal. The output signal of an amplifier may consist of the same frequencies as the input signal or it may consist of only a portion of the frequencies as in the case of a subwoofer or midrange speaker. The radio creates a low level stereo audio output signal, which is sent at the user-defined volume level to the audio amplifier. The audio amplifier amplifies the signal and sends it to the appropriate speakers. Each of the audio output channel circuits (+) and (-), from the amplifier have a DC bias voltage that is approximately one half of battery voltage. The audio being played on the system is produced by a varying AC voltage that is centred around the DC bias voltage on the same circuit. The AC voltage is what causes the speaker cone to move and produce sound. The frequency (Hz) of the AC voltage signal is directly related to the frequency of the input (audio source playing) to the audio system. Both the DC bias voltage and the AC voltage signals are needed for the audio system to properly produce sound.

Radio Data System (RDS)

The radio may be equipped with the Radio Data System (RDS). The RDS feature is available only on FM stations that broadcast RDS information. This system relies upon receiving specific information from these stations and only works when the information is available. While the radio is tuned to an FM-RDS station, the station name or call letters display.

RDS data is carried in what is known as a "subcarrier". A subcarrier is a frequency that the FM broadcaster is authorised to use to send data that is not audible in the main audio program.

- RDS functions will only work with FM broadcast stations that are broadcasting RDS data.
- Not all FM Broadcast stations broadcast RDS data or offer all of the RDS services.
- The information displayed is dependent upon the information broadcast by the particular station. The information may vary greatly between stations.
- RDS functions may not work properly when reception is weak, reception is of poor quality, or RDS is not implemented properly by the FM Broadcaster.
- In some cases, a radio station broadcasting incorrect information may cause the RDS features of the radio to appear to work improperly.

With RDS, the radio can do the following:

- Seek to stations broadcasting the selected type of programming
- Receive announcements concerning local and national emergencies
- Display messages from radio stations
- Receive alert warnings of local or national emergencies. When an alert announcement comes on the current radio station, ALERT! displays. You will hear the announcement, even if the volume is low or a CD is playing. If a CD is playing, play stops during the announcement. Alert announcements cannot be turned off. ALERT! is not affected by tests of the emergency broadcast system. This feature is not supported by all RDS stations.

RDS may display text information such as:

- The name of the station.
- The type of program.
- General information such as artist and song title, call in phone numbers, etc.

Theft Deterrent

The radio theft deterrent system is intended to disable or limit radio functionality if incorrect vehicle information is received by the radio. The radio disables functionality if the VIN information received by the radio does not match the VIN information that has been learned by the radio. The radio receives this information via serial data. A possible cause of incorrect VIN info could be the radio was originally installed in another vehicle.

The radio has the following theft operating modes as part of the theft deterrent system:

- Normal Mode: The radio has learned a correct VIN sequence and the VIN information received via serial data matches the learned VIN sequence. In this mode the radio has full functionality.
- No VIN Mode: The radio has not received or learned a correct VIN sequence. In this mode the radio has limited functionality.
- Theft Detected Mode: The radio has learned a correct VIN sequence and the VIN information received via serial data does NOT match the learned VIN sequence. In this mode the radio may be disabled or have limited functionality. The radio display will indicate that theft protection is active.

Steering Wheel Controls (If equipped)

Some audio functions are available using the steering wheel controls. The steering wheel controls duplicate the function of the primary controls available on the radio.

For additional information on steering wheel controls, refer to Steering Wheel Controls Description and Operation .

Auxiliary Audio Input Jack (If equipped)

The infotainment system may have a 3.5mm (1/8 in.) auxiliary audio input jack located in the centre console. The auxiliary audio input jack interfaces directly with the radio. When a portable audio playback device is connected to the auxiliary jack, an internal switch detects the connection and the radio will switch to AUX as the audio source. Audio signals from the device are sent to the radio from the auxiliary jack via the left, right, and common audio signal circuits.

- When a device is first connected to the 3.5mm (1/8 in.) input jack the infotainment system automatically switches to that device. If an auxiliary device has already been connected, press the AUX or CD/AUX button to select the device.
- Playback of an audio device that is connected to the 3.5mm jack can only be controlled using the controls on the device.
- The volume control on the device may need to be adjusted to ensure sufficient playback volume through the infotainment system.

USB Port (If Equipped)

The infotainment system may have a USB connector located in the centre console. The USB connector interfaces directly with the radio. The USB connector supports both USB standards 1.1 and 2.0.

USB Supported Devices:

- USB Flash Sticks (Thumb Drives)
- Portable USB Hard Drives
- Portable Digital Media Players (iPod®, ZUNE®, etc)

Depending on the USB device, some devices may not be recognised, or some features/functions may not be able to be controlled with the radio controls. USB HUB devices are not supported.

Speed Compensated Volume

With Auto Volume Control, the audio system will adjust automatically to make up for road and wind noise as you drive, by increasing the volume as vehicle speed increases. To use auto volume control, set the volume at the desired level, and then select either Low, Medium, or High. To turn SCV off, select the Off screen button.

Navigation System Components and Features (if equipped)

The navigation system, if equipped, provides the following:

- Connection to the global positioning system (GPS) aerial, which provides the vehicle position information.
- Route guidance with verbal prompts to the operator.
- Map data for navigation and map route guidance, stored on the internal hard drive.
- Traffic and weather information for display on the navigation system map (with active subscription, where available).

Global Positioning System (GPS) Aerial

The global positioning system (GPS) aerial is part of the multi-band aerial located on the roof of the vehicle. The GPS aerial is used to collect the signals of the orbiting GPS satellites. Within the aerial is housed a low noise amplifier that allows for a more broad and precise reception of this data. The GPS aerial amplifier is powered through the coaxial cable.

The aerial is connected to the navigation radio through a signal splitter. The signal splitter is a component for dividing the navigation signal into two paths without any transmission loss. This allows the use of a single GPS aerial to provide a signal to both the navigation radio and the telematics communication interface module.

Route Guidance

The map will display the route to the selected destination. Voice prompts alert the operator of upcoming events (turns) and arrivals at the destination. The navigation system will automatically recalculate if the route is not followed. The navigation radio uses data received from the global positioning system (GPS) satellites, the vehicle speed signal. and serial data information to accurately display the current position of the vehicle.

Points of Interest

The map database provides point of interest information. Points of interests are locations that are frequently visited. Points of interest can be can be displayed on the map or set as a destination. The following are some of the available Points of interests:

- Gas Station
- Restaurant
- College
- Police Station

Traffic Information

XM NavTraffic™ is a subscription based service that enhances the navigation system with live traffic information. The service provides information on traffic conditions such as traffic speed, accidents, disabled vehicles, construction and road closings.

The integrated XM satellite radio receives the information. When Traffic Information is turned ON in the configuration menu, the available information will be displayed on the map screen.

The traffic information can vary based upon coverage in the area, and coverage is not available in all areas. No information will be displayed if coverage is not available, if there is no traffic information for the area, or if there is no subscription to receive the information.

A subscription fee is required in order to receive the XM NavTraffic™ service. No traffic data will be displayed without a current subscription.

Weather Information

XM NavWeather™ is a subscription based service that transmits weather information to the integrated XM satellite radio. Real time information such as current and future weather and road conditions, atmospheric conditions, and National Weather Service warnings is provided, as well as 3 day forecasts for some cities. Received information is

available to be displayed on the Weather Info screen.

A subscription fee is required in order to receive the XM NavWeather™ service. No weather data will be displayed without a current subscription.

© Copyright Chevrolet. All rights reserved

Special Tools

Illustration	Tool Number/Description
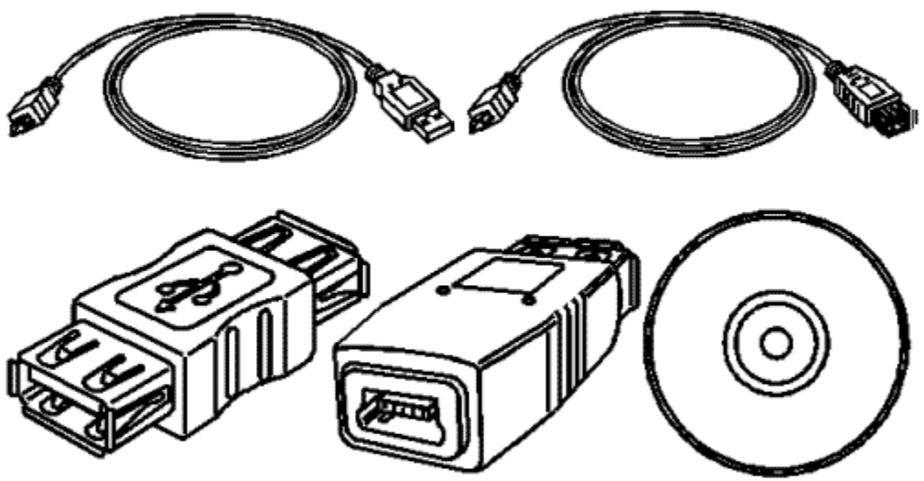	EL 50334-50 USB Cable and Adapter Kit

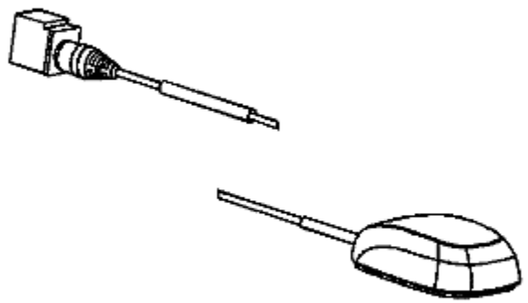	EL-48028 Digital Radio Test Aerial
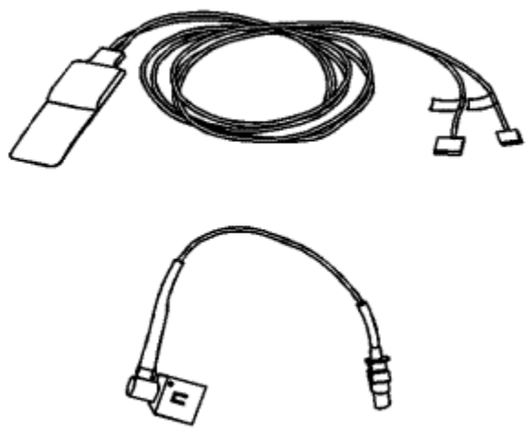	EL-49903 OnStar Aerial Diagnostic Tool Kit

© Copyright Chevrolet. All rights reserved

Ambient Air Temperature Sensor Resistance

Temperature		Ambient Air Temp Sensor	Ambient Air Temp Sensor (Min)	Ambient Air Temp Sensor (Max)
°C	°F	(kΩ)	(kΩ)	(kΩ)
-40	-40	169.4	158.46	181.19
-30	-22	88.74	83.39	94.47
-20	-4	48.58	47.19	50.02
-10	14	27.67	26.93	28.44
0	32	16.33	15.92	16.75
10	50	9.95	9.71	10.19
20	68	6.24	6.1	6.38
30	86	4.02	3.94	4.11
40	104	2.66	2.61	2.71
50	122	1.8	1.73	1.87
60	140	1.24	1.2	1.29

&#169© Copyright Chevrolet. All rights reserved

Instrument Cluster Schematics

Power, Ground, Serial Data, and Indicators

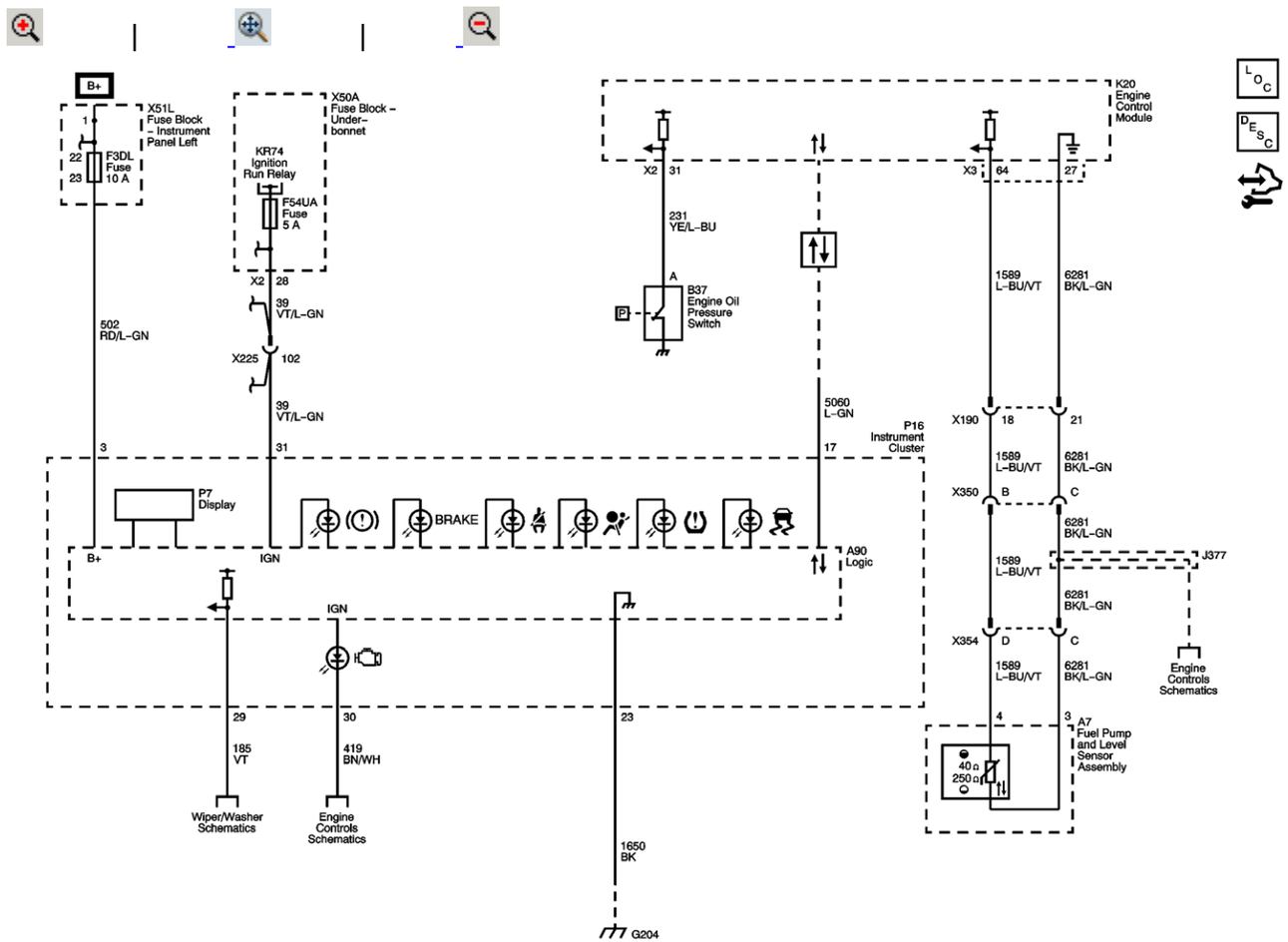

Master Electrical Component List

Instrument Cluster Description and Operation

F1DL, F2DL, F3DL, F4DL, F5DL, F6DL, F7DL, F10DL, F11DL and F15DL Fuses

F32UA, F33UA, F50UA, F51UA, F52UA, F53UA and F54UA Fuses

Data Communication Schematics

Windscreen Wiper/Washer

Power, Ground, MIL and Data Communication

© Copyright Chevrolet. All rights reserved

Driver Information System Schematics

Driver Information Centre

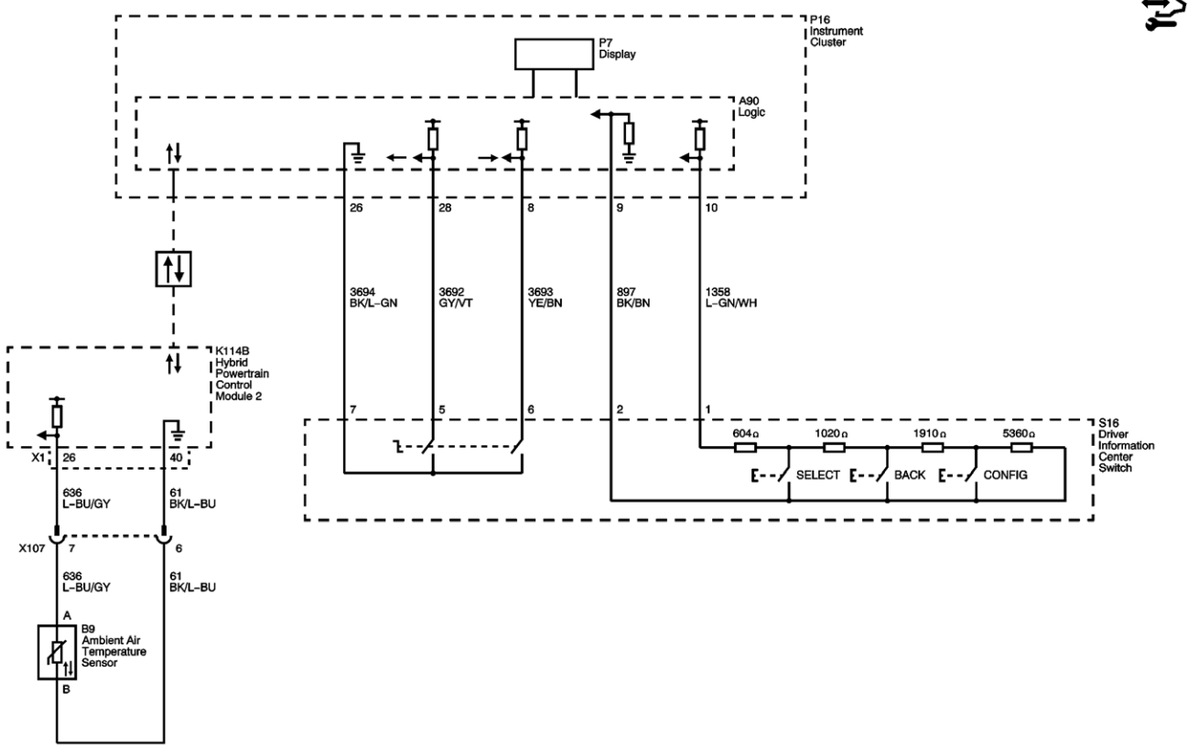

Master Electrical Component List

Driver Information Centre (DIC) Description and Operation

© Copyright Chevrolet. All rights reserved

Audible Warnings Schematics

Audible Warning

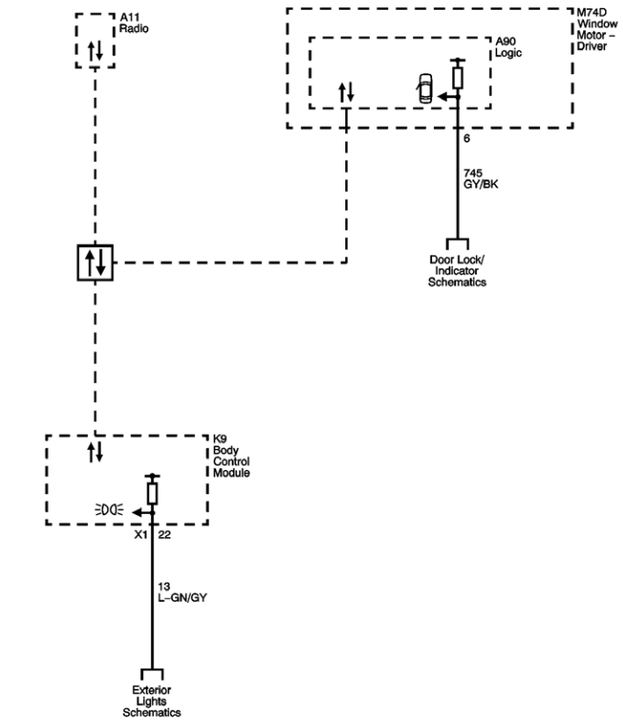

Master Electrical Component List

Audible Warnings Description and Operation

Data Communication Schematics

Door Ajar Switches

Park, Tail and Number Plate Lamps

© Copyright Chevrolet. All rights reserved

DTC B0550

Diagnostic Instructions

- Perform the Diagnostic System Check - Vehicle prior to using this diagnostic procedure.
- Review Strategy Based Diagnosis for an overview of the diagnostic approach.
- Diagnostic Procedure Instructions provides an overview of each diagnostic category.

DTC Descriptor

DTC B0550 32: Odometer Circuit General Memory Malfunction

Circuit/System Description

The instrument cluster is equipped with odometers that indicate the distance traveled by the vehicle. One type of odometer is the season odometer where the travelled distance can not be reset by the driver. This information is also stored in the body control module (BCM). In addition to storing the season odometer value for the vehicle, the instrument cluster and the BCM store the VIN. Software checks are performed to ensure these modules, and their stored season odometer information, can not be moved or transferred between different vehicles.

Conditions for Running the DTC

The ignition is ON.

Conditions for Setting the DTC

The BCM has detected an internal memory malfunction.

Action Taken When the DTC Sets

DTC B0550 32 is stored in the BCM memory.

Conditions for Clearing the DTC

The BCM no longer detects a malfunction.

Reference Information

Schematic Reference

Instrument Cluster Schematics

Connector End View Reference

Component Connector End Views

Description and Operation

Driver Information Centre (DIC) Description and Operation

Electrical Information Reference

- Circuit Testing
- Connector Repairs
- Testing for Intermittent Conditions and Poor Connections
- Wiring Repairs

Scan Tool Reference

Control Module References for scan tool information

Circuit/System Verification

Verify that DTC B0550 32 is not set.

If the DTC is set, program the K9 BCM. Verify that DTC B0550 32 does not reset. If the DTC resets, replace the K9 BCM.

Repair Instructions

Perform the Diagnostic Repair Verification after completing the diagnostic procedure.

Control Module References for BCM replacement, programming and setup

&#169© Copyright Chevrolet. All rights reserved

Symptoms - Displays and Gauges

Note: The following steps must be completed before using the symptom diagnostic tables.

1. Before using the symptom diagnostic tables, perform the Diagnostic System Check - Vehicle .
2. Review the system operation in order to understand the system functions. Refer to the following description and operations:
   - Instrument Cluster Description and Operation
   - Indicator/Warning Message Description and Operation
   - Driver Information Centre (DIC) Description and Operation
   - Audible Warnings Description and Operation

Visual/Physical Inspection

- Inspect for aftermarket devices which can affect the operation of the instrument panel cluster or the audible warning systems. Refer to Checking Aftermarket Accessories .
- Inspect the accessible system components or the visible system components for obvious damage or for obvious conditions which can cause the symptom.
- Inspect for the proper fluid levels.

Intermittent

Faulty electrical connections or wiring may be the cause of intermittent conditions. Refer to Testing for Intermittent Conditions and Poor Connections .

Symptom List

Refer to a symptom diagnostic procedure from the following list in order to diagnose the symptom:

Gauges and Odometer

- Instrument Cluster Display Malfunction
- Instrument Cluster Gauges Malfunction
- Fuel Gauge Malfunction - DTC P0461-P0464
- Speedometer and/or Odometer Malfunction

Indicators

- ABS Indicator Malfunction
- Air Bag Indicator Circuit Malfunction : Driver → Passenger
- Brake Warning Indicator Malfunction
- Door Ajar Indicator Malfunction
- Park Brake System Diagnosis
- Engine Oil Pressure Indicator Malfunction - DTC P0520
- Headlamps Malfunction
- Low Tyre Pressure Indicator Malfunction
- Seat Belt Indicator Circuit Malfunction - Driver
- Seat Belt Indicator Circuit Malfunction - Passenger
- Seat Belt Indicator Circuit Malfunction - Rear
- Traction Control/Stability Control Indicator Malfunction
- Indicator Lamps and/or Indicators Malfunction
- Washer Malfunction

Driver Information Centre

Driver Information Centre Switch Malfunction - DTC B3567

Audible Warnings

Chime Malfunction

&#169© Copyright Chevrolet. All rights reserved

Chime Malfunction

Diagnostic Instructions

- Perform the Diagnostic System Check - Vehicle prior to using this diagnostic procedure.
- Review Strategy Based Diagnosis for an overview of the diagnostic approach.
- Diagnostic Procedure Instructions provides an overview of each diagnostic category.

Circuit/System Description

The radio generates the audible warnings. The instrument cluster, the body control module (BCM), the inflatable restraint sensing and diagnostic module (SDM) or the object alarm module request audible warnings via Low Speed CAN-Bus signals.

Reference Information

Schematic Reference

Audible Warnings Schematics

Connector End View Reference

Component Connector End Views

Description and Operation

Audible Warnings Description and Operation

Electrical Information Reference

- Circuit Testing
- Connector Repairs
- Testing for Intermittent Conditions and Poor Connections
- Wiring Repairs

Scan Tool Reference

Control Module References for scan tool information

Circuit/System Verification

Note: Before performing this diagnostics, make sure no indicators are illuminated after the instrument cluster performs a lamp test. If any indicators are illuminated after the bulb test, perform the indicator diagnostics before this diagnostics.

1. Vehicle in Service Mode, radio ON, adjust the radio balance and fade to each speaker.
   If any speaker does not operate properly, refer to Speaker Malfunction .
2. Vehicle in Service Mode, buckle up driver seat belt, verify the scan tool Driver Seat Belt Status parameter is Buckled.
   If not Buckled refer to Seat Belt Indicator Circuit Malfunction - Driver .
3. Vehicle in Service Mode, headlamp switch OFF, verify the scan tool Headlamp On Switch parameter is Inactive.
   If not Inactive, refer to Headlamps Malfunction .
4. Vehicle in Service Mode, parking lamp switch OFF, verify the scan tool Parklamp Switch parameter is Inactive.
   If not Inactive, refer to Park, License, and/or Tail Lamps Malfunction .
5. Vehicle in Service Mode, indicator switch OFF, verify the scan tool Left Indicator Switch parameter and the scan tool Right Indicator Switch parameter is Inactive.
   If not Inactive, refer to Indicator Lamps and/or Indicators Malfunction .
6. Vehicle in Service Mode, doors closed, verify that all scan tool parameters listed below are Inactive.
   - Driver Door Ajar Switch
   - Passenger Door Ajar Switch
   - Left Rear Door Ajar Switch
   - Right Rear Door Ajar Switch

   If any are not Inactive, refer to Door Ajar Indicator Malfunction .
7. Vehicle in Service Mode, verify that the scan tool Park Assist Switch parameter is Active when the parking assist is active and Inactive when the parking assist is Inactive.
   If the scan tool parameter does not operate properly, refer to Parking Assist System Malfunction .
8. If all tests operate properly, replace the A11 radio.

Repair Instructions

Perform the Diagnostic Repair Verification after completing the diagnostic procedure.

Control Module References for BCM or Radio replacement, programming and setup

&#169© Copyright Chevrolet. All rights reserved

Driver Information Centre Switch Malfunction - DTC B3567

Diagnostic Instructions

- Perform the Diagnostic System Check - Vehicle prior to using this diagnostic procedure.
- Review Strategy Based Diagnosis for an overview of the diagnostic approach.
- Diagnostic Procedure Instructions provides an overview of each diagnostic category.

DTC Descriptors

DTC B3567 01: Info Display Select Switch Circuit Short to Battery

DTC B3567 02: Info Display Select Switch Circuit Short to Ground

DTC B3567 04: Info Display Select Switch Circuit Open

DTC B3567 59: Info Display Select Switch Circuit Protection Time-Out

Circuit/System Description

The driver information centre switch is a multiplexed switch. The Select, Back, and Config buttons are a series of momentary contact switches that connect a series of resistors in a resistor ladder format. The Select, Back, and Config buttons utilise a 12 V signal and the instrument cluster determines which button is pressed by the voltage drop across the resistors when the button is pressed.

Conditions for Running the DTC

- The ignition is in OFF, ACCESSORY or RUN position.
- The system voltage is between 9–16 V.

Conditions for Setting the DTC

B3567 01

The instrument cluster detects that the driver information centre switch signal circuit is shorted to battery.

B3567 02

The instrument cluster detects that the driver information centre switch signal circuit is shorted to ground.

B3567 04

The instrument cluster detects that the driver information centre switch signal circuit is open.

B3567 59

The instrument cluster detects that the driver information centre switch is stuck.

Action Taken When the DTC Sets

The instrument cluster ignores the driver information centre switch inputs.

Conditions for Clearing the DTC

The DTC will become history if the instrument cluster no longer detects a malfunction.

Reference Information

Schematic Reference

Instrument Cluster Schematics

Connector End View Reference

Component Connector End Views

Description and Operation

Driver Information Centre (DIC) Description and Operation

Electrical Information Reference

- Circuit Testing

- Connector Repairs
- Testing for Intermittent Conditions and Poor Connections
- Wiring Repairs

Scan Tool Reference

Control Module References for scan tool information

Circuit/System Verification

Vehicle in Service Mode, observe the scan tool Driver Information Centre Switch parameter, that when the S16 driver information centre switch, Select, Back, and Config are pressed and released the scan tool parameter toggles between Select, Back, and Config and Inactive.

Circuit/System Testing

1. Vehicle OFF, disconnect the harness connector at the S16 driver information centre switch.
2. Test for less than 10 Ω between the low reference circuit terminal 2 and ground.
   If greater than the specified range, test the low reference circuit for an open/high resistance. If the circuit tests normal replace the P16 instrument cluster.
3. Vehicle in Service Mode, test for 10-12 V between the signal S16 driver information centre switch signal circuit terminal 1 and ground.
   If less than the specified range, test the signal for an open/high resistance or a short to ground. If the circuit tests normal replace the P16 instrument cluster.
   If greater than the specified range, test the signal circuit for a short to high voltage. If the circuit tests normal, replace the P16 instrument cluster.
4. If all circuits tests normal, test or replace the S16 driver information centre switch.

Repair Instructions

Perform the Diagnostic Repair Verification after completing the diagnostic procedure.

- Driver Information Display and Multifunction Switch Replacement
- Control Module References for instrument cluster replacement, programming and setup

&#169© Copyright Chevrolet. All rights reserved

Engine Oil Pressure Indicator Malfunction - DTC P0520

Diagnostic Instructions

- Perform the Diagnostic System Check - Vehicle prior to using this diagnostic procedure.
- Review Strategy Based Diagnosis for an overview of the diagnostic approach.
- Diagnostic Procedure Instructions provides an overview of each diagnostic category.

DTC Descriptor

DTC P0520 00: Engine Oil Pressure Switch Circuit Malfunction

Diagnostic Fault Information

Circuit	Short to Ground	Open/High Resistance	Short to Voltage	Signal Performance
Signal	P0520	1	1	--
1. Engine Oil Pressure Indicator Malfunction				

Typical Scan Tool Data

ECM - Engine Oil Pressure Switch

Circuit	Short to Ground	Open	Short to Voltage
Operating Conditions: Engine Running ***Parameter Normal Range:*** OK			
Signal	Low	OK	OK
Ground	--	OK	--

Circuit/System Description

The engine oil pressure switch is a normally closed switch that opens with the proper oil pressure. With the ignition switch turned ON and the engine not running, the engine control module (ECM) should detect a low signal voltage input. With the engine running, the engine oil pressure switch opens and the ECM should detect a high signal voltage input. When the oil pressure is low, the ECM sends a message via High Speed CAN-Bus to the body control module (BCM). The BCM then sends a message via Low Speed CAN-Bus to the instrument cluster requesting the engine oil pressure indicator turned ON.

Conditions for Running the DTC

The engine is running.

Conditions for Setting the DTC

- The ECM detects that the engine oil pressure switch signal circuit is pulled low.
- The above condition is present for greater than 10 seconds.

Action Taken When the DTC Sets

The instrument cluster illuminates the service vehicle soon indicator and the oil pressure low indicator.

Conditions for Clearing the DTC

The DTC becomes history when the conditions for setting the DTC are no longer present.

Reference Information

Schematic Reference

Instrument Cluster Schematics

Connector End View Reference

Component Connector End Views

Description and Operation

- Instrument Cluster Description and Operation
- Indicator/Warning Message Description and Operation
- Driver Information Centre (DIC) Description and Operation

Electrical Information Reference

- Circuit Testing
- Connector Repairs
- Testing for Intermittent Conditions and Poor Connections
- Wiring Repairs

DTC Type Reference

Powertrain Diagnostic Trouble Code (DTC) Type Definitions

Scan Tool Reference

Control Module References for scan tool information

Circuit/System Verification

Vehicle in Service Mode, observe the scan tool Engine Oil Pressure Switch parameter with the ignition switch turned ON and the engine not running the reading should be Low, with the engine running the reading should be OK.

Circuit/System Testing

1. Vehicle OFF, disconnect the harness connector at the B37 engine oil pressure switch.
2. Vehicle in Service Mode, verify the scan tool ECM - Engine Oil Pressure Switch parameter is OK.
   If not the specified value, test for the signal circuit terminal A for a short to ground. If the circuit tests normal, replace the K20 ECM.
3. Install a 3 A fused jumper wire between the signal circuit terminal A and ground. Verify the scan tool ECM - Engine Oil Pressure Switch is Low.
   If not the specified value, test the signal circuit for a short to voltage or an open/high resistance. If the circuit tests normal, replace the K20 ECM.
4. Command the All Indicators test ON and OFF with the scan tool. The engine oil pressure indicator should turn ON and OFF when changing between the commanded states.
   If the engine oil pressure indicator always on or always off, replace the P16 instrument cluster.
5. If all circuits test normal, test or replace the B37 engine oil pressure switch.

Repair Instructions

Perform the Diagnostic Repair Verification after completing the diagnostic procedure.

- Engine Oil Pressure Indicator Switch Replacement
- Control Module References for instrument cluster or ECM replacement, programming and setup

&#169© Copyright Chevrolet. All rights reserved

Fuel Gauge Malfunction - DTC P0461-P0464

Diagnostic Instructions

- Perform the Diagnostic System Check - Vehicle prior to using this diagnostic procedure.
- Review Strategy Based Diagnosis for an overview of the diagnostic approach.
- Diagnostic Procedure Instructions provides an overview of each diagnostic category.

DTC Descriptors

DTC P0461: Fuel Level Sensor Performance

DTC P0462: Fuel Level Sensor Circuit Low Voltage

DTC P0463: Fuel Level Sensor Circuit High Voltage

DTC P0464: Fuel Level Sensor Circuit Intermittent

Diagnostic Fault Information

Circuit	Short to Ground	Open/High Resistance	Short to Voltage	Signal Performance
Fuel Level Sensor 1 Signal	P0462	P0463	P0463	P0461
Low Reference	--	1	P0463, P0464	P0461
1. Fuel Gauge Malfunction				

Circuit/System Description

The fuel level sensor changes resistance based on fuel level. The engine control module (ECM) monitors the signal circuit of the fuel level sensor in order to determine the fuel level. When the fuel tank is full, the resistances of the fuel level sensor is low and the ECM senses a low signal voltage on the signal circuit of the fuel level sensor. When the fuel tank is empty, the resistance of the fuel level sensor is high and the ECM senses a high signal voltage. The ECM uses the signal circuit of the fuel level sensor in order to calculate the percentage of remaining fuel in the tank. The ECM sends the fuel level percentage via High Speed CAN-Bus to the body control module (BCM). The BCM then sends the fuel level percentage via Low Speed CAN-Bus to the instrument cluster in order to control the fuel gauge. When the fuel level falls below approximately

11% the instrument cluster illuminates the low fuel level indicator.

Conditions for Running the DTC

- The engine is running
- The system voltage is between 11-16 V

Conditions for Setting the DTC

P0461

- The ECM detects a difference between the fuel consumed by the engine and change of the fuel level signal of less than 1 L (0.26 gal) over a range of 30 L (7.92 gal) or 45.6% of the primary fuel tank.
- The above condition is present for about 300 seconds.

P0462

- The signal voltage is less than 0.25 V.
- The above conditions must be met for 5 seconds.

P0463

- The signal voltage is greater than 4.7 V.
- The above conditions must be met for 5 seconds.

P0464

- The fuel level change is greater than 10%.
- The above conditions must be met for 30 seconds.
- DTC P0464 runs and fails 2 out of 3 test cycles.

Action Taken When the DTC Sets

- P0461, P0462, P0463, and P0464 are Type B DTCs
- The fuel gauge defaults to empty
- The low fuel indicator illuminates

Conditions for Clearing the DTC

- P0461, P0462, P0463, and P0464 are Type B DTCs
- The DTC becomes history when the conditions for setting the DTC are no longer present.
- The history DTC clears after 40 malfunction-free warm-up cycles.

Reference Information

Schematic Reference

Instrument Cluster Schematics

Connector End View Reference

Component Connector End Views

Description and Operation

Instrument Cluster Description and Operation

Electrical Information Reference

- Circuit Testing
- Connector Repairs
- Testing for Intermittent Conditions and Poor Connections
- Wiring Repairs

DTC Type Reference

Powertrain Diagnostic Trouble Code (DTC) Type Definitions

Scan Tool Reference

Control Module References for scan tool information

Circuit/System Testing

1. Vehicle OFF, disconnect the harness connector at the B46 fuel level sensor.
2. Test for less than 10 Ω at the low reference circuit terminal 3.
   If greater than the specified range, test the low reference circuit for an open/high resistance. If the circuit tests normal, replace the K20 Engine Control Module.

3. Vehicle in Service Mode, test for 4.8-5.2 V between the signal circuit terminal 4 and ground.
   If greater than the specified range, test the signal circuit for a short to voltage. If the circuit tests normal, replace the K20 ECM.
   If less than the specified range, test the signal circuit for a short to ground or an open/high resistance. If the circuit tests normal, replace the K20 ECM.
4. If all circuits test normal, replace the B46 fuel level sensor.

Repair Instructions

Perform the Diagnostic Repair Verification after completing the diagnostic procedure.

- Fuel Level Sensor Replacement
- Control Module References for the ECM replacement, programming and setup

&#169© Copyright Chevrolet. All rights reserved

Instrument Cluster Gauges Malfunction

Diagnostic Instructions

- Perform the Diagnostic System Check - Vehicle prior to using this diagnostic procedure.
- Review Strategy Based Diagnosis for an overview of the diagnostic approach.
- Diagnostic Procedure Instructions provides an overview of each diagnostic category.

Circuit/System Description

The instrument cluster displays the engine coolant temperature, fuel level, vehicle speed and the engine speed based on the information from the engine control module (ECM). The ECM sends information via a High Speed CAN-Bus signal to the body control module (BCM). The BCM then sends the information via a Low Speed CAN-Bus signal to the instrument cluster to display the engine coolant temperature, fuel level, the engine speed, the vehicle speed and the distance travelled, either in kilometers or miles, based on the vehicle requirements.

Reference Information

Schematic Reference

Instrument Cluster Schematics

Connector End View Reference

Component Connector End Views

Description and Operation

Instrument Cluster Description and Operation

Electrical Information Reference

- Circuit Testing
- Connector Repairs

- Testing for Intermittent Conditions and Poor Connections
- Wiring Repairs

Scan Tool Reference

Control Module References for scan tool information

Circuit/System Verification

1. Vehicle in Service Mode, perform the Instrument Cluster Gauge Sweep test with the scan tool, verify that the instrument cluster performs a screen test sequence.

   Note: Since there are no gauges, the instrument cluster will go through a screen test sequence instead of sweeping the gauges.

   If the instrument cluster does not perform the screen test sequence, replace the P16 instrument cluster.
2. Drive the vehicle, verify the gauge values match the values on the scan tool.
   If the values do not match, reprogram the P16 instrument cluster. If the values still do not match, replace the P16 instrument cluster.
3. If all gauges display the correct value, and the odometer display counts up, replace the K20 engine control module.

Repair Instructions

Perform the Diagnostic Repair Verification after completing the diagnostic procedure.

Control Module References for instrument cluster or ECM replacement, programming and setup

&#169© Copyright Chevrolet. All rights reserved

Instrument Cluster Display Malfunction

Diagnostic Instructions

- Perform the Diagnostic System Check - Vehicle prior to using this diagnostic procedure.
- Review Strategy Based Diagnosis for an overview of the diagnostic approach.
- Diagnostic Procedure Instructions provides an overview of each diagnostic category.

Circuit/System Description

The instrument cluster displays the engine coolant temperature, fuel level, vehicle speed and the engine speed based on the information from the engine control module (ECM). The ECM sends information via a High Speed CAN-Bus signal to the body control module (BCM). The BCM then sends the information via a Low Speed CAN-Bus signal to the instrument cluster to display the engine coolant temperature, fuel level, the engine speed, the vehicle speed and the distance travelled, either in kilometers or miles, based on the vehicle requirements.

Reference Information

Schematic Reference

Instrument Cluster Schematics

Connector End View Reference

Component Connector End Views

Description and Operation

Instrument Cluster Description and Operation

Electrical Information Reference

- Circuit Testing
- Connector Repairs

- Testing for Intermittent Conditions and Poor Connections
- Wiring Repairs

Scan Tool Reference

Control Module References for scan tool information

Circuit/System Verification

1. Vehicle in Service Mode, perform the Instrument Cluster Gauge Sweep test with the scan tool, verify that the instrument cluster performs a screen test sequence.

   Note: Since there are no gauges, the instrument cluster will go through a screen test sequence instead of sweeping the gauges.

   If the instrument cluster does not perform the screen test sequence, replace the P16 instrument cluster.
2. Perform the Driver Information Centre Segments test for each colour, White, Blue, Green, Red, Black and Off with a scan tool, verify there are no stuck or dead pixels in any colour.
   If there are any stuck or dead pixels in any colour, replace the P16 instrument cluster.

Repair Instructions

Perform the Diagnostic Repair Verification after completing the diagnostic procedure.

Control Module References for instrument cluster replacement, programming and setup

&#169© Copyright Chevrolet. All rights reserved

Speedometer and/or Odometer Malfunction

Diagnostic Instructions

- Perform the Diagnostic System Check - Vehicle prior to using this diagnostic procedure.
- Review Strategy Based Diagnosis for an overview of the diagnostic approach.
- Diagnostic Procedure Instructions provides an overview of each diagnostic category.

Circuit/System Description

The instrument cluster displays the engine coolant temperature, fuel level, vehicle speed and the engine speed based on the information from the engine control module (ECM). The ECM sends information via a High Speed CAN-Bus signal to the body control module (BCM). The BCM then sends the information via a Low Speed CAN-Bus signal to the instrument cluster to display the engine coolant temperature, fuel level, the engine speed, the vehicle speed and the distance travelled, either in kilometers or miles, based on the vehicle requirements. The instrument cluster will display dashes when its VIN does not match the VIN received from the BCM.

Diagnostic Aids

If the VIN mismatch is corrected the odometer will once again be displayed in the instrument cluster. If the vehicle is driven for a calibrated distance with a VIN mismatch, it will cause the instrument cluster odometer to enter into an error mode and lock itself. When this occurs the dashes will remain on the display even after correcting the VIN mismatch. The vehicle odometer status data display on the scan tool can be used to identify a locked odometer. The only way to unlock the instrument cluster (clear the dashes from the display) is to perform an SPS programming event. Failure to follow the diagnostic and programming procedures may result in either an improper odometer value or a module replacement.

Reference Information

Schematic Reference

Instrument Cluster Schematics

Connector End View Reference

Component Connector End Views

Description and Operation

Instrument Cluster Description and Operation

Electrical Information Reference

- Circuit Testing
- Connector Repairs
- Testing for Intermittent Conditions and Poor Connections
- Wiring Repairs

Scan Tool Reference

Control Module References for scan tool information

Circuit/System Verification

1. Verify no DTC is set.
   If any DTC is set, diagnose this first.
2. Vehicle in Service Mode, perform the Instrument Cluster Gauge Sweep test with the scan tool, verify that the instrument cluster performs a screen test sequence.

   Note: Since there are no gauges, the instrument cluster will go through a screen test sequence instead of sweeping the gauges.

   If the instrument cluster does not perform the screen test sequence, replace the P16 instrument cluster.
3. Drive the vehicle, verify the speedometer value matches the Vehicle Speed parameter on the scan tool.
   If the values do not match, replace the P16 instrument cluster.
4. Drive the vehicle, verify the odometer display, the displayed distance counts up while driving.
   If the odometer displays only "----" (dashes), go to circuit/system testing.
   If the odometer display does not count up, verify the scan tool Body Control Module Odometer parameter and scan tool Engine Control Module Odometer parameter are functioning correctly. If the Engine Control Module Odometer parameter does not count up while driving, replace the K20 engine control module. If the Body Control Module Odometer parameter does not count up while driving, replace the K9 BCM. If the K9 BCM and K20 Engine Control Modules are working correctly, replace the P16 instrument cluster.

Circuit/System Testing

Note: If there are multiple modules not original to the vehicle and are not new correctly configured service parts, SPS may not be able to properly read or recover the vehicle odometer value. Follow government rules and documentation (including vehicle identification) regarding inaccurate/unknown odometer values.

Instrument Cluster is Showing "----" (Dashes, Correcting VIN mismatch - odometer is still unlocked.)

1. Verify the vehicle odometer lock status with a scan tool. The reading should be Inactive.
   If the reading is Active, go to correcting VIN mismatch - odometer is locked.
2. Using the scan tool, verify the BCM VIN matches the vehicle VIN placard. If the VIN does not match, reprogram the BCM.
3. Using the scan tool, verify the instrument cluster VIN matches the vehicle VIN placard. If the VIN does not match, reprogram the instrument cluster.
   If the instrument cluster is still displaying "----" (dashes), replace the P16 instrument cluster.

Instrument Cluster is Showing "----" (Dashes, Correcting VIN mismatch - odometer is locked)

1. Using the scan tool, verify the instrument cluster VIN matches the vehicle's VIN placard. If the VIN does not match, reprogram the instrument cluster.
2. Perform the BCM setup procedure in SPS.
3. Vehicle in Service Mode, verify the instrument cluster is displaying the correct odometer value.
   If the instrument cluster is still displaying "----" (dashes), replace the P16 instrument cluster.

Repair Instructions

Perform the Diagnostic Repair Verification after completing the diagnostic procedure.

Control Module References for instrument cluster, BCM or ECM replacement, programming and setup

&#169© Copyright Chevrolet. All rights reserved

Driver Information Display Replacement

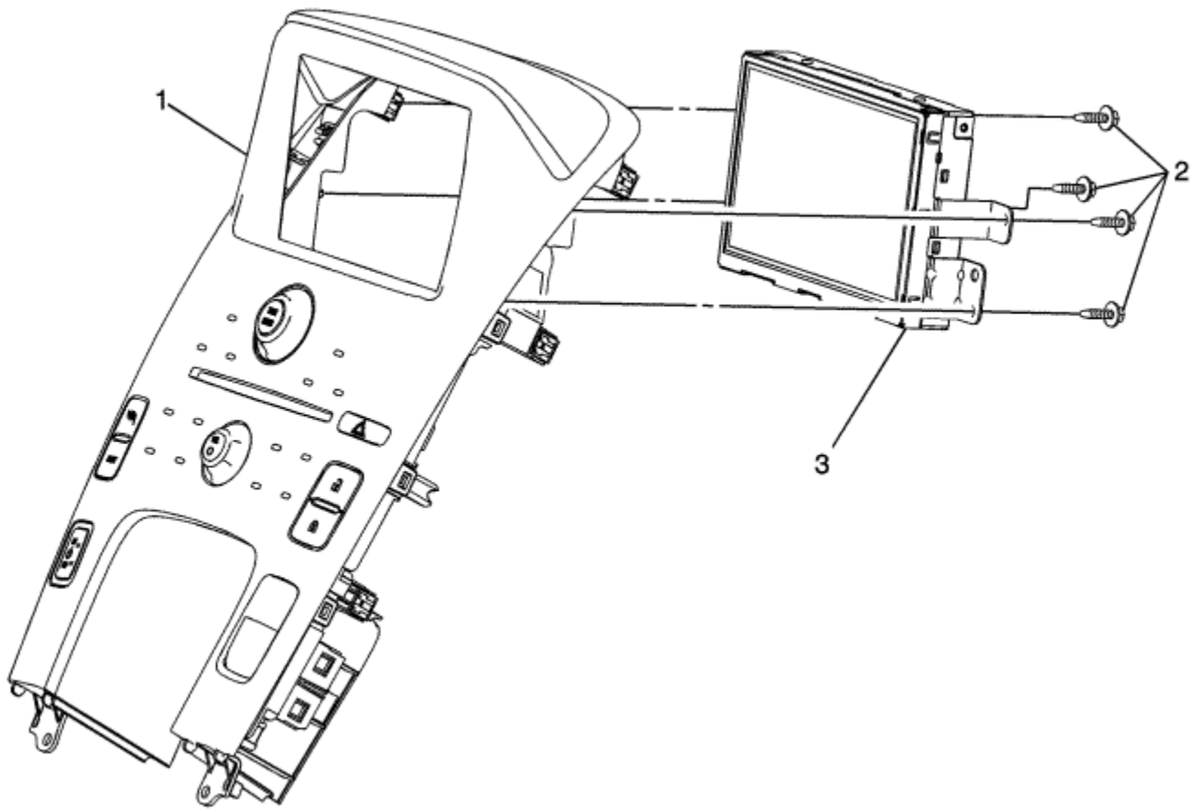

Callout	Component Name
Preliminary Procedure Disconnect the battery negative cable. Refer to Battery Negative Cable Disconnection and Connection .	
1	Radio Control Assembly

	Refer to Radio Control Assembly Replacement .
2	Drivers Information Display Fasteners (Qty: 4) **Caution:** Refer to Fastener Caution in the Preface section. **Tighten** 2.5 N·m (22 lb in)
3	Drivers Information Display Assembly **Procedure** Refer to Control Module References for programming and setup information.

© Copyright Chevrolet. All rights reserved

Driver Information Display and Multifunction Switch Replacement

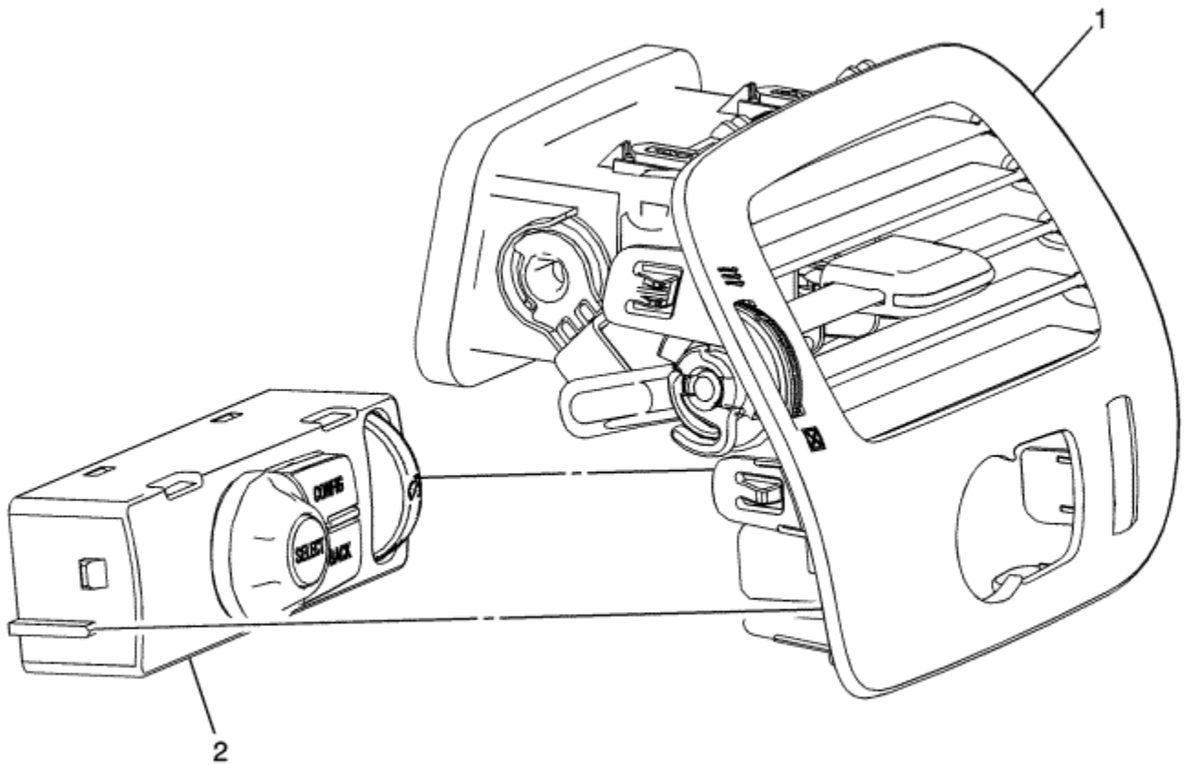

Callout	Component Name
Preliminary Procedure Disconnect the battery negative cable. Refer to Battery Negative Cable Disconnection and Connection .	
1	Instrument Panel Outer Air Outlet Assembly

	Refer to Instrument Panel Outer Air Outlet Replacement - Left Side .
2	Driver Information Display and Multifunction Switch Assembly **Procedure** Unsnap the switch assembly from the instrument panel outer air outlet.

© Copyright Chevrolet. All rights reserved

Instrument Cluster Replacement

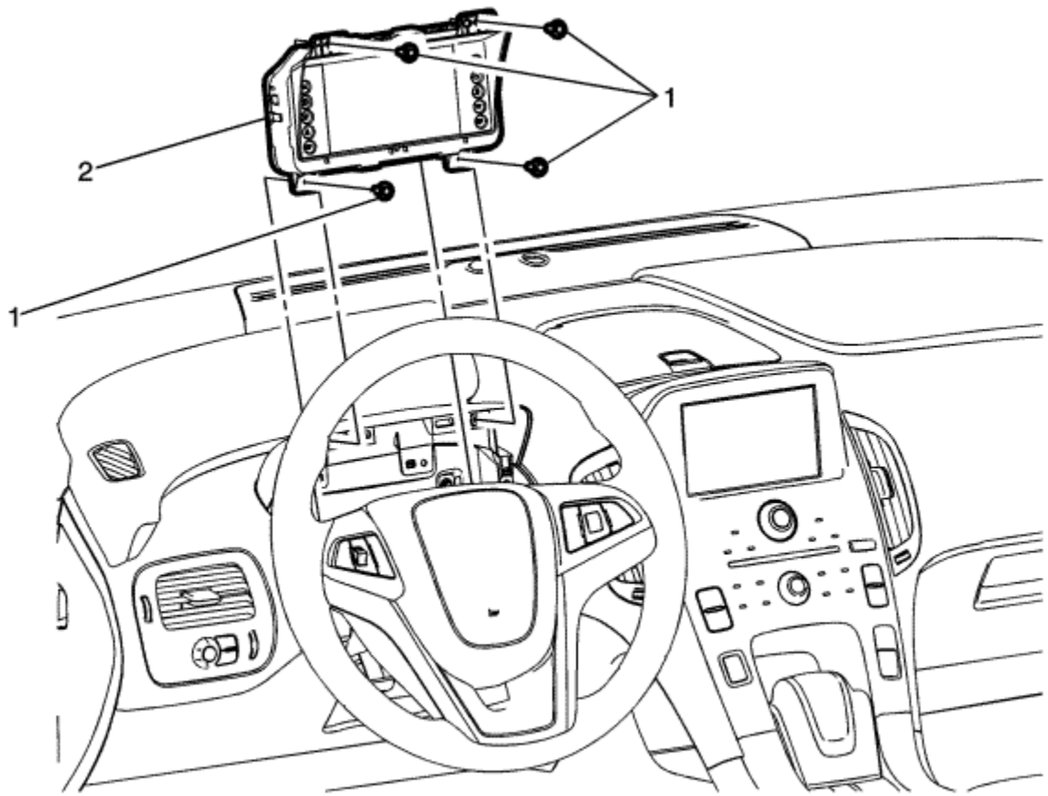

Callout	Component Name
Preliminary Procedure 1. Disconnect the battery negative cable. Refer to Battery Negative Cable Disconnection and Connection . 2. Remove the instrument panel cluster trim plate and steering column upper trim cover assembly. Refer to Instrument Panel Cluster Trim Plate Replacement .	

1	Instrument Cluster Fasteners (Qty: 4) **Caution:** Refer to Fastener Caution in the Preface section.
2	Instrument Cluster Assembly **Procedure** Refer to Control Module References for programming and setup information.

© Copyright Chevrolet. All rights reserved

Battery Charge Indicator Replacement

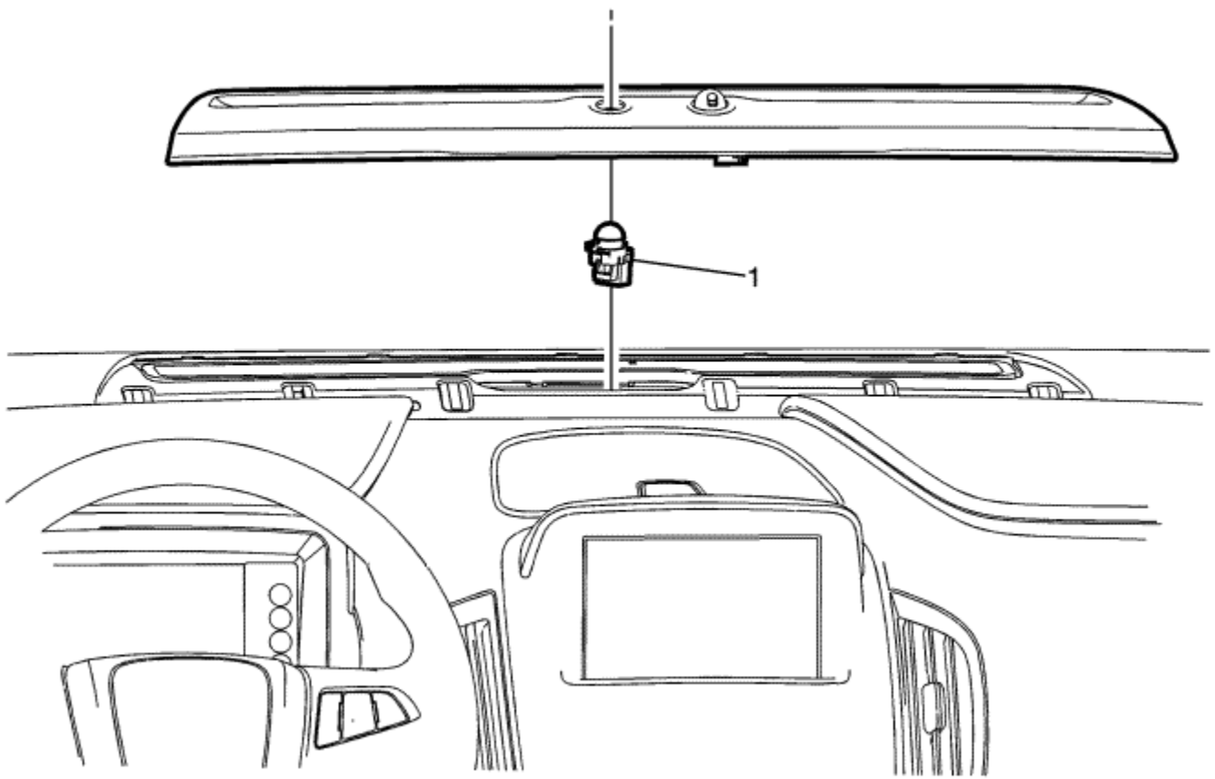

Callout	Component Name
Preliminary Procedure Remove the instrument panel upper trim panel. Refer to Instrument Panel Upper Trim Panel Replacement .	
	Battery Charge Indicator

1	**Procedure** 1. Twist and pull up to remove. 2. Disconnect electrical connector.

© Copyright Chevrolet. All rights reserved

Accessory Switch Replacement

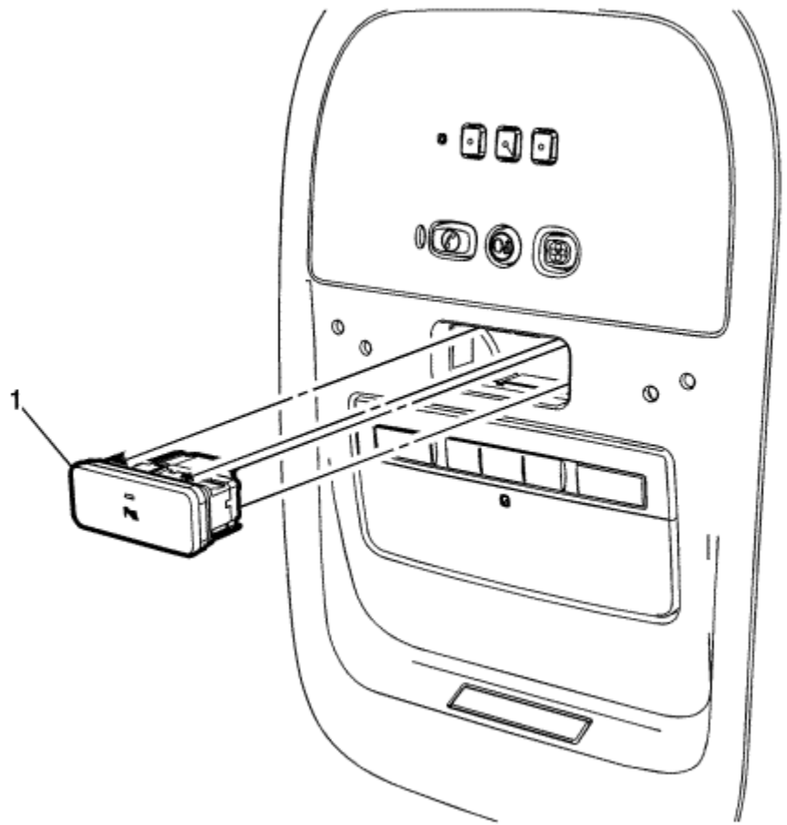

Callout	Component Name
Preliminary Procedure Remove the roof console. Refer to Roof Console Replacement .	
	Accessory Switch

1	**Procedure** Disconnect the electrical connector.

© Copyright Chevrolet. All rights reserved

Audible Warnings Description and Operation

The audible warnings alert the driver of a system concern or a critical vehicle condition. The radio generates the audible warnings through the speakers. The radio receives audible warning requests via the serial data circuit. If the radio receives multiple audible warning requests, the warning with the highest priority sounds first. On vehicles without a radio, a chime module generates the audible warnings and receives audible warning requests via the serial data circuit. Either the radio or the chime module is the chime producer. The following lists the audible warning sounds:

1. Single pulse gong
2. Multiple pulse gong
3. Single pulse beep
4. Multiple pulse beep
5. Click
6. Clack

Auto Stop Mode

The chime producer activates when the vehicle comes to a stop (vehicle is running and engine is off) and the driver or passenger door is opened as requested by the body control module.

Fasten Safety Belt Warning

The chime producer activates the fasten safety belt audible warning as requested by the body control module (BCM). The BCM sends a serial data message to the chime producer indicating the chime as a multiple gong. The fasten safety belt warning sounds and the fasten safety belt indicator illuminates when the following occurs:

- The ignition switch transitions to ON.
- The inflatable restraint sensing and diagnostic module (SDM) detects that the drivers seat belt is not buckled and the signal is low. The SDM sends a serial data message to the BCM indicating the seat belt status. The instrument cluster receives a serial data message from the BCM indicating the driver seat belt status.

If the seat belt is buckled when the ignition is turned ON, the chime does not sound. If the seat belt is buckled while the chime is sounding, the chime stops. If the seat belt is unbuckled after the initial transition to ON, the chime does not sound.

Lights On Warning

The chime producer activates the lights on warning as requested by the BCM. The BCM sends a serial data message to the chime producer indicating the chime as a multiple gong. The lights on warning sounds when the following occurs:

- The ignition is OFF.
- The BCM determines that the driver door is open and the signal circuit is low.
- The BCM determines that the headlamp switch is in the park or head position.

Brake Warning

The chime producer activates the brake audible warning as requested by multiple control modules. The BCM, electronic brake control module or the handbrake control module sends a serial data message to the chime producer indicating the chime as a multiple gong. The brake warning sounds and the BRAKE indicator illuminates when the following occurs:

- The ignition is ON.
- The vehicle speed is greater than 8 km/h (4.9 MPH). The instrument cluster receives a serial data message from the engine control module (ECM) indicating the vehicle speed.
- The BCM determines that the handbrake is engaged and the signal circuit is low.
- The brake fluid is low.

Door Ajar Warning

The chime producer activates the door ajar audible warning as requested by the BCM. The BCM sends a serial data message to the chime producer indicating the chime frequency of a medium rate and continuous duration. The door ajar warning sounds and the appropriate door ajar indicator illuminates in the driver information centre when the following occurs:

- The BCM determines that a door (driver door, passenger door, left rear door, right rear door) is open and the signal circuit is low. The instrument cluster also receives a serial data message from the BCM indicating the door ajar status.
- The vehicle is not in PARK. The BCM receives a serial data message from the ECM/BCM indicating the gear position.

Object Detection

The chime producer activates the object detection audible warning as requested by the object alarm module. When an object is within the measuring range of the sensor, the ultrasonic pulse is reflected and is received by the sending or a neighbouring sensor. The sensor converts this signal into a voltage signal and sends this signal to the object alarm module. The object alarm module evaluates the received sensor signals. As soon as an object is within the measuring range, the object alarm module sends a message via CAN-Bus to the chime producer in order to give out the acoustic distance signal. The measuring range is between 30-120 cm (11.81-47.24 in). From a distance of 120 cm (47.24 in), the acoustic signal is active. The frequency of the beep sound increases with decreasing distance. From a distance less than 30 cm (11.81 in), the sound becomes continuous.

Additional Warnings

The following warnings have an associated instrument cluster indicator or driver information centre message:

- Turn Signal Indicators - The chime producer activates the audible warning as requested by the BCM. The chime produces two different chimes, one when the indicator turns off and another when the indicator turns on.
- Vehicle Overspeed Message - The chime producer activates the audible warning as requested by the BCM. The BCM sends a serial data message to the chime producer.
- Fuel Level Low Message - The chime producer activates the audible warning as requested by the BCM. The BCM sends a serial data message to the chime producer.
- Oil Pressure Indicator - The chime producer activates the audible warning as requested by the BCM. The BCM sends a serial data message to the chime producer.
- Park Assist Fault Clean Rear Bumper Message - The chime producer activates the audible warning as requested by the BCM. The BCM sends a serial data message to the chime producer.
- Tire Pressure Low Indicator - The chime producer activates the audible warning as requested by the BCM. The BCM sends a serial data message to the chime producer.

Refer to Indicator/Warning Message Description and Operation .

&#169© Copyright Chevrolet. All rights reserved

Driver Information Centre (DIC) Description and Operation

The Driver Information Centre display is in the instrument cluster. The Driver Information Centre displays information about the vehicle. It also displays warning messages if a system problem is detected. For more information on Indicators and Warning messages, refer to Indicator/Warning Message Description and Operation .

There are 3 switch functions for the driver information centre:

- CONFIG: Press to select either the Simple or Enhanced instrument cluster configuration display.
- BACK: Press to return to the previous screen, exit a screen, or return to the main menu. Press BACK to minimise the DIC menu display.
- SELECT: Press the centre of the knob to select the highlighted item. Turn the knob to scroll through the menu items.

Menu

Turn the SELECT knob to scroll through the possible menus. Press the centre of the SELECT knob when a menu is highlighted to enter that menu. The possible Driver Information Centre menu's are:

- Trip A
- Trip B
- Oil Life
- Tyre Pressure
- Vehicle Messages
- Units
- Tutorial Mode

Trip A and Trip B

The trip displays show fuel used, average fuel economy, and distance travelled since the last trip reset.

Reset the trip data by pressing and holding the SELECT button when either Trip A or Trip B is displayed.

Oil Life

This displays the percentage of remaining oil life. The lower the percentage, the closer the vehicle is to needing an oil change.

When the oil life is depleted, the CHANGE ENGINE OIL SOON message displays. Change the oil as soon as possible.

The oil life must be reset after each oil change. Avoid accidental resetting of the Engine Oil Life System. It cannot be reset accurately until the next oil change. To reset the Engine Oil Life System, refer to GM Oil Life System Resetting . The system is reset when 100% displays.

Outside Air Temperature

The outside air temperature can be accessed through the driver information centre Trip/Fuel switch function. The driver information centre shows the outside air temperature as a damped value. The time and rate of the temperature update is based on an algorithm in the instrument cluster. Factors such as last temperature reading, current temperature reading, length of time the vehicle was off, current vehicle speed, and the distance driven effect when the displayed temperature is updated. To get the vehicle to display the most accurate temperature faster, drive the vehicle. Constant moving traffic will update the display to the correct temperature more quickly than stop and go traffic.

Tyre Pressure

The display will show a vehicle with the approximate pressures of all four tyres. Tyre pressure is displayed in either kilopascal (kPa) or in pounds per square inch (psi).

If a low or high tyre pressure is detected, a message is displayed advising to check the tyre pressure in the specified tyre.

Vehicle Messages

Turn the SELECT knob to scroll through any active warning messages. Press SELECT to review the messages.

Units

Turn the SELECT knob to change the unit display to METRIC or US when the display is active. Press SELECT to confirm the setting. This will change the displays on the cluster and DIC to either metric or English (US) measurements.

Tutorial Mode

Select this menu item to view a screen that explains some of the unique features of the cluster.

Language

The driver information centre is capable of displaying in different languages, corresponding to the radio language settings. The instrument cluster receives a GMLAN message with language information from the radio. This message is only sent one time, after a new language is selected. To set the language, see the owners manual.

&#169© Copyright Chevrolet. All rights reserved

Indicator/Warning Message Description and Operation

Indicator LIGHT ON

Refer to the owner's manual for the descriptions and explanations of all indicator lights.

For diagnosis and repair information related to an indicator light, refer to the System Diagnosis and the Description of Operation that the message relates to.

Message Displayed

Refer to the owner's manual for descriptions and explanations of all messages displayed.

For diagnosis and repair information related to a displayed message, refer to the System Diagnosis and the Description of Operation that the message relates to.

© Copyright Chevrolet. All rights reserved

Instrument Cluster Description and Operation

Displays Test

The instrument cluster displays a preview of information that includes electric range, charging, odometer, and battery status. This happens when the driver door is first opened, and following the welcome animation before starting the vehicle.

A CHARGING OVERRIDE/INTERRUPTION OCCURRED message may display on the lower left of the screen to indicate that a charging override or interruption has occurred due to:

- Override of charging settings by vehicle owner via OnStar.
- Unintended interruption of AC power at the vehicle's charge port.
- Interruption of charging by the utility company via OnStar as authorised by vehicle owner.

Refer to the owners manual for a complete list of vehicle charging status screen messages.

Indicators and Warning Messages

Refer to Indicator/Warning Message Description and Operation .

Engine Coolant Temperature Gauge

The instrument cluster displays the engine coolant temperature as determined by the engine control module (ECM). The ECM sends the engine coolant temperature information via a High Speed CAN-Bus signal to the body control module (BCM). The BCM then sends the information via a Low Speed CAN-Bus signal to the instrument cluster to display the engine coolant temperature. The engine coolant temperature gauge defaults to 40°C (104°F) or below if:

- The ECM detects a malfunction in the engine coolant temperature sensor circuit.
- The BCM detects a loss of serial data communications with the ECM.
- The instrument cluster detects a loss of serial data communications with the BCM.

Fuel Level Gauge

The instrument cluster displays the fuel level based on the information from the ECM. The ECM converts the data from the fuel level sensors to a fuel level signal. The ECM sends the fuel level signal via a High Speed CAN-Bus signal to the BCM. The BCM then sends the information via a Low Speed CAN-Bus signal to the instrument cluster to

display the fuel level. If the fuel level falls under 11% the instrument cluster switches on the low fuel level indicator. The fuel gauge defaults to empty if:

- The ECM detects a malfunction in the fuel level sensor circuit.
- The BCM detects a loss of serial data communications with the ECM.
- The instrument cluster detects a loss of serial data communications with the BCM.

Speedometer

The instrument cluster displays the vehicle speed based on the information from the ECM. The ECM sends the vehicle speed information via a High Speed CAN-Bus signal to the BCM. The BCM then sends the vehicle speed information via a Low Speed CAN-Bus signal to the instrument cluster in order to display the vehicle speed, either in kilometres or miles, based on the vehicle requirements. The speedometer defaults to 0 km/h (0 MPH) if:

- The BCM detects a loss of serial data communications with the ECM.
- The instrument cluster detects a loss of serial data communications with the BCM.

Odometer

The instrument cluster displays the vehicle odometer in the driver information centre. The ECM send a distance rolling count message on GMLAN to the body control module (BCM). The BCM uses this information to calculate the vehicle odometer. This odometer value is then sent to the instrument cluster on GMLAN. The instrument cluster does not calculate the odometer. The odometer displays miles or kilometres as selected in the Units menu.

The odometer value is stored in multiple modules. The instrument cluster is a secondary storage module for the odometer, while the BCM is the primary storage and accumulator.

In addition to storing the odometer value for the vehicle, the instrument cluster and the BCM store the VIN. Software checks are performed to ensure these modules, and their stored odometer information, cannot be moved or transferred between different vehicles.

If the VINs do not match, the instrument cluster will go into an error mode and display "----" (dashes). If the VIN mismatch exists over a calibrated distance, the instrument cluster will "lock" the odometer display and only show dashes, even if the VIN mismatch is subsequently correct. The only way to clear or "unlock" the instrument cluster is to perform a BCM programming event using SPS.

Tachometer

The instrument cluster displays the engine speed based on the information from the ECM. The ECM converts the data from the engine speed sensor to an engine revolution signal. The ECM sends the engine speed information via a High Speed CAN-Bus signal to the BCM. The BCM then sends the information via a Low Speed CAN-Bus signal to the instrument cluster to display the engine speed. The tachometer defaults to 0 RPM if:

- The ECM detects a malfunction in the engine speed sensor circuit.
- The BCM detects a loss of serial data communications with the ECM.
- The instrument cluster detects a loss of serial data communications with the BCM.

Compass

The vehicle may have a compass display on the Driver Information Centre. The compass receives its heading and other information from the Global Positioning System (GPS) aerial. If applicable, the GPS aerial is located with the telematics communication interface control module. For GPS diagnostic information refer to 149623

Driver Information Centre Display

In the lower middle of the instrument cluster, an additional display is installed. Its task is to give additional information, such as an odometer or error codes. This part of the instrument cluster is available in 4 different variants, mostly depending on the assembled engine. For further information refer to Driver Information Centre (DIC) Description and Operation .

&#169© Copyright Chevrolet. All rights reserved

Steering Wheel Secondary/Configurable Control Schematics

Steering Wheel Controls

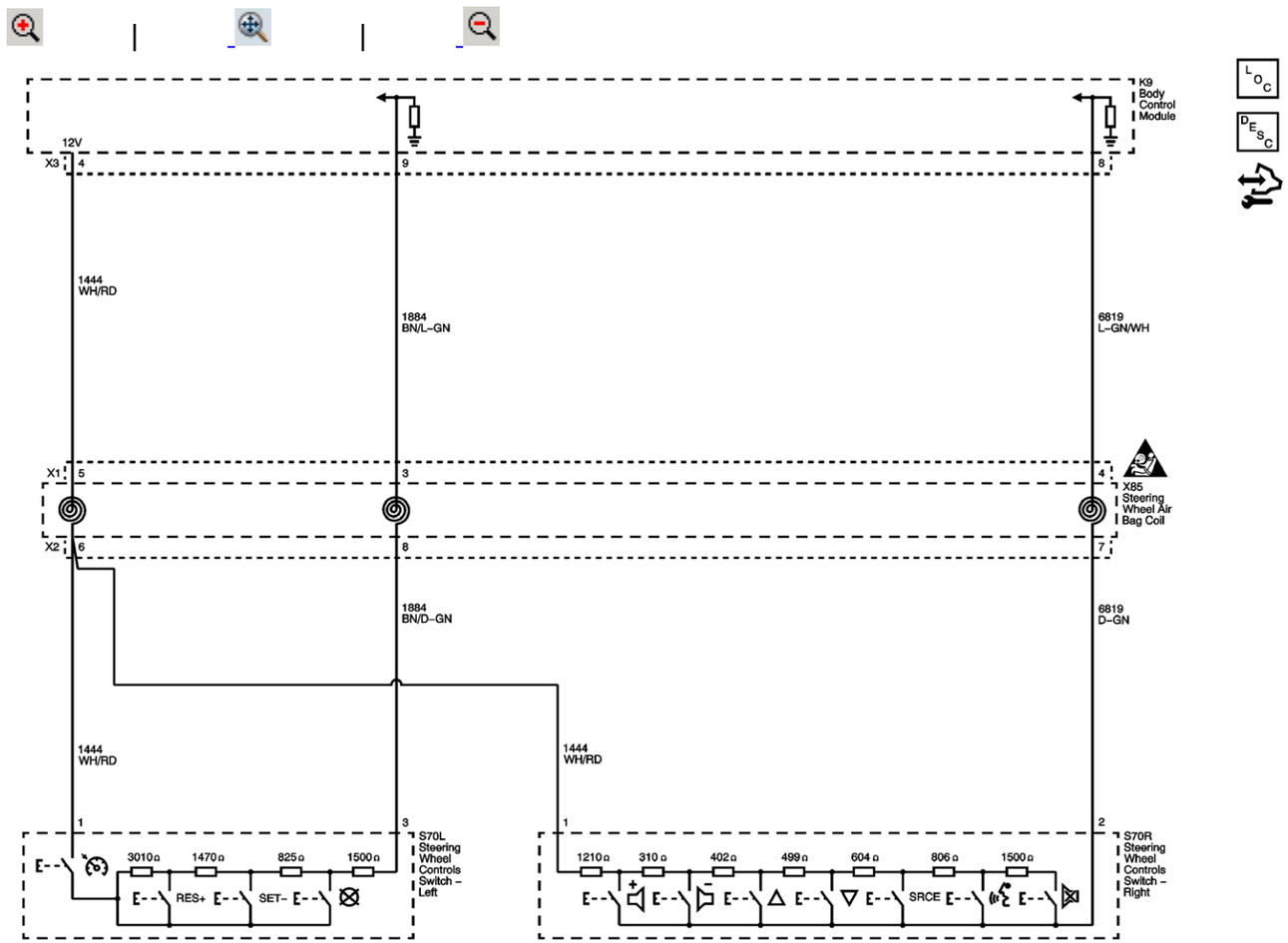

Master Electrical Component List

Steering Wheel Controls Description and Operation

Master Electrical Schematic Icons

© Copyright Chevrolet. All rights reserved

Symptoms - Secondary and Configurable Customer Controls

Important: The following steps must be completed before using the symptom tables.

1. Perform the Diagnostic System Check - Vehicle before using the symptom tables in order to verify that all of the following are true:
   - There are no DTCs set.
   - The control modules can communicate via the serial data link.
2. Review the system description and operation in order to familiarize yourself with the system functions. Refer to Steering Wheel Controls Description and Operation .

Visual/Physical Inspection

- Inspect for aftermarket devices which could affect the operation of the steering wheel controls. Refer to Checking Aftermarket Accessories .
- Inspect the easily accessible or visible system components, for obvious damage or conditions, which could cause the symptom.

Intermittent

Faulty electrical connections or wiring may be the cause of intermittent conditions. Refer to Testing for Intermittent Conditions and Poor Connections .

Symptom List

Refer to a symptom diagnostic procedure from the following list in order to diagnose the symptom:

Refer to Steering Wheel Controls Malfunction in order to diagnose the symptom.

&#169© Copyright Chevrolet. All rights reserved

Steering Wheel Controls Malfunction

Diagnostic Instructions

- Perform the Diagnostic System Check - Vehicle prior to using this diagnostic procedure.
- Review Strategy Based Diagnosis for an overview of the diagnostic approach.
- Diagnostic Procedure Instructions provides an overview of each diagnostic category.

Diagnostic Fault Information

Circuit	Short to Ground	Open/High Resistance	Short to Voltage	Signal Performance
B+ Voltage Reference	1	1	--	--
Signal	1	1	1	--
1. Steering Wheel Controls Inoperative				

Circuit/System Description

The body control module (BCM) supplies voltage to the audio steering wheel control switches and monitors the reindicator. Each switch state is associated to a set resistance value and when pressed a specific voltage drop occurs across the resistor unique to the switch. The BCM identifies the switch selection and activates the feature.

Diagnostic Aids

- This diagnostic is for the audio steering wheel controls.
- Before diagnosis of the steering wheel controls, ensure the primary controls of the associated component are functioning properly.
- If a single switch function is inoperative, test the suspect switch. Refer to component testing.

Reference Information

Schematic Reference

Steering Wheel Secondary/Configurable Control Schematics

Connector End View Reference

Component Connector End Views

Description and Operation

Steering Wheel Controls Description and Operation

Electrical Information Reference

- Circuit Testing
- Connector Repairs
- Testing for Intermittent Conditions and Poor Connections
- Wiring Repairs

Scan Tool Reference

Control Module References for scan tool information

Circuit/System Verification

Vehicle in Service Mode, observe the scan tool SWC Bank 1 status while pressing and releasing the switches. The reading should be SW1-SW7 identifying the switch pressed, and Idle when released.

Circuit/System Testing

1. Vehicle OFF, disconnect the harness connector at the S70R steering wheel control switch - right.
2. Vehicle in Service Mode, test for B+ between the voltage reference circuit terminal 1 and ground.
   If less than the specified value, test the voltage reference circuit for a short to ground or an open/high resistance. If the circuit tests normal, replace the K9 body control module.
3. Test for B+ between the voltage reference circuit terminal 1 and the signal circuit terminal 2.
   If less than the specified value, test the signal circuit for a short to voltage or an open/high resistance. If the circuit tests normal, replace the K9 body control module.
4. Vehicle OFF, disconnect the X3 harness connector at the K9 body control module.
5. Test for infinite resistance between the signal circuit terminal 2 and ground.
   If less than the specified value, test the signal circuit for a short to ground.
6. If all circuits test normal, test or replace the S70R steering wheel control switch - right.

Repair Instructions

Perform the Diagnostic Repair Verification after completing the diagnostic procedure.

- Radio and Telephone Control Switch Replacement
- Control Module References for BCM replacement, programming and setup

&#169© Copyright Chevrolet. All rights reserved

Steering Wheel Controls Description and Operation

The steering wheel control switches duplicate the function of the primary controls of the associated component, through a network of momentary contact switches and a series of resistors. The body control module (BCM) supplies voltage to the switches and monitors the reindicator. When a switch is pressed, a specific voltage drops across the resistor unique to that switch. The BCM identifies the switch selected and sends a serial data message to the component controlled by the switch, activating the feature.

This section is intended to diagnose the circuits between the BCM and the steering wheel control switches. If the primary control for the device is inoperative, refer to the appropriate section for the component the steering wheel control switch is used for.

© Copyright Chevrolet. All rights reserved

Cruise Control Schematics

Cruise Control

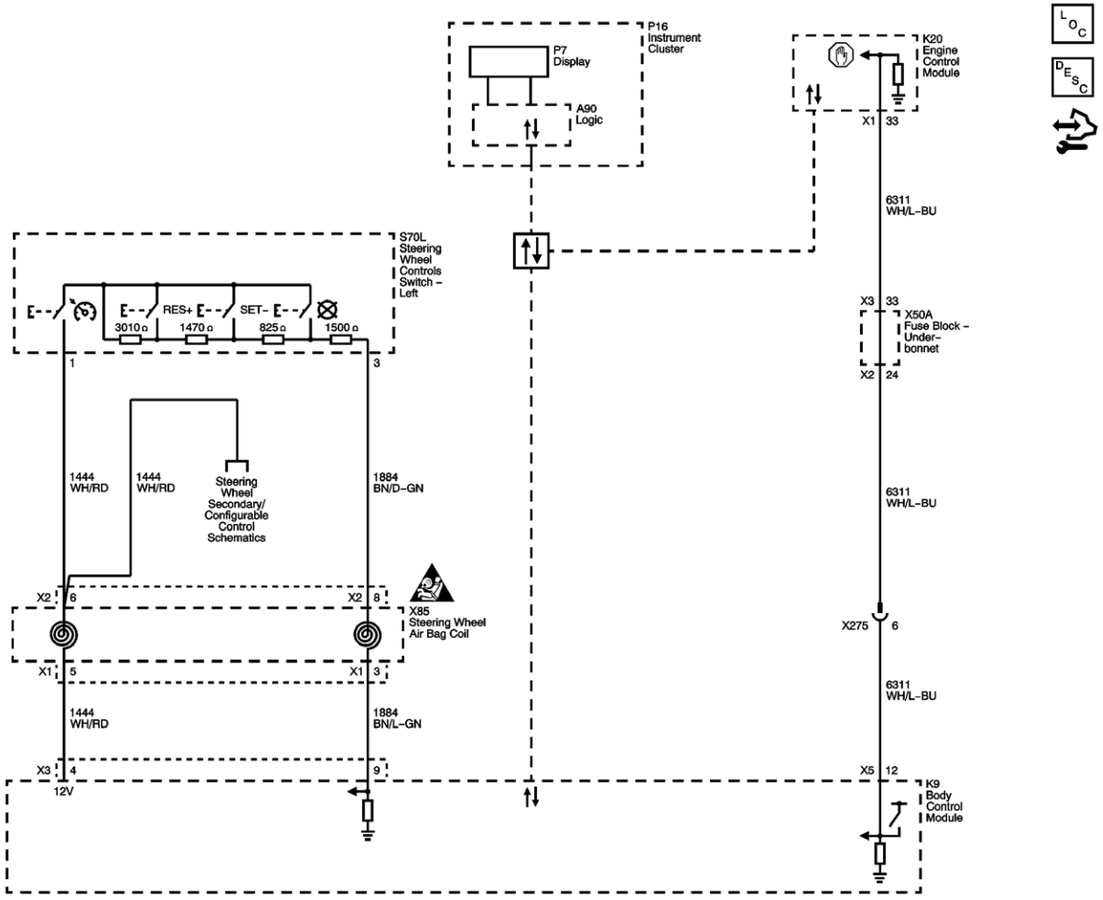

Master Electrical Component List

Cruise Control Description and Operation

Data Communication Schematics

Steering Wheel Controls

Master Electrical Schematic Icons

© Copyright Chevrolet. All rights reserved

DTC B3794

Diagnostic Instructions

- Perform the Diagnostic System Check - Vehicle prior to using this diagnostic procedure.
- Review Strategy Based Diagnosis for an overview of the diagnostic approach.
- Diagnostic Procedure Instructions provides an overview of each diagnostic category.

DTC Descriptors

DTC B3794 01: Cruise Control Function Request Circuit Short To B+

DTC B3794 08: Cruise Control Function Request Circuit Signal Invalid

DTC B3794 59: Cruise Control Function Request Circuit/Component Protection Time Out

Diagnostic Fault Information

Circuit	Short to Ground	Open/High Resistance	Short to Voltage	Signal Performance
B+ Voltage Reference	1	B3794 08	B3794 59	B3794 08
Cruise Control Switch Signal	1	B3794 08	B3794 01	B3794 08
1. Cruise Control Malfunction				

Circuit/System Description

The cruise control switch is an input to the body control module (BCM). The BCM monitors the cruise control on/off, set/coast, resume/accelerate and cancel switches via the cruise control switch signal circuit in order to detect when the driver has requested to perform a cruise control function. The BCM detects a specific voltage signal on the cruise control switch signal circuit when a switch is applied. The engine control module (ECM) receives the requested cruise control switch function from the BCM via a serial data message.

Conditions for Running the DTC

- The engine is running.
- The cruise switch is ON.

Conditions for Setting the DTC

- The BCM detects an invalid voltage signal on the cruise control switch signal circuit.
- The above condition is present for greater than 1 second.

Actions Taken When the DTC Sets

- The malfunction indicator lamp (MIL) will not illuminate.
- The cruise control system is disabled.

Conditions for Clearing the DTC

- The condition responsible for setting the DTC no longer exists.
- A history DTC will clear after 40 malfunction-free ignition cycles have occurred.

Reference Information

Schematic Reference

Cruise Control Schematics

Connector End View Reference

Component Connector End Views

Description and Operation

Cruise Control Description and Operation

Electrical Information Reference

- Circuit Testing
- Connector Repairs
- Testing for Intermittent Conditions and Poor Connections
- Wiring Repairs

Scan Tool Reference

Control Module References for scan tool information

Circuit/System Verification

Engine ON, while rotating the steering wheel to both steering stops, observe the scan tool Cruise Control Switch parameter while pressing each of the cruise control switches. The parameter should toggle between On, Off, Resume and Set as the applicable switch is pressed.

Circuit/System Testing

1. Vehicle OFF, disconnect the harness connector at the S70L steering wheel controls switch-left.
2. Vehicle in Service Mode, test for B+ between the voltage reference circuit terminal 1 and ground.
   If less than the specified value, test the reference circuit for a short to ground or an open/high resistance. If the circuit tests normal, replace the BCM.
3. Test for B+ between the voltage reference circuit terminal 1 and the signal circuit terminal 3.
   If less than the specified value, test the signal circuit for a short to voltage or an open/high resistance. If the circuit tests normal, replace the BCM.
4. Vehicle OFF, disconnect the X3 harness connector at the K9 BCM.
5. Test for infinite resistance between the signal circuit terminal 9 and ground.
   If less than the specified value, test the signal circuit for a short to ground.
6. If all circuits test normal, test or replace the S70L steering wheel controls switch-left.

Repair Instructions

Perform the Diagnostic Repair Verification after completing the repair.

Control Module References for BCM replacement, programming and setup

&#169© Copyright Chevrolet. All rights reserved

DTC P0564

Diagnostic Instructions

- Perform the Diagnostic System Check - Vehicle prior to using this diagnostic procedure.
- Review Strategy Based Diagnosis for an overview of the diagnostic approach.
- Diagnostic Procedure Instructions provides an overview of each diagnostic category.

DTC Descriptor

DTC P0564: Cruise Control Multifunction Switch Circuit

Diagnostic Fault Information

Circuit	Short to Ground	High Resistance	Open	Short to Voltage	Signal Performance
B+	1	P0564	1	-	P0564
Cruise Control ON/OFF Switch Signal	1	P0564	1	-	P0564
Cruise Control Resume/Accel. Switch Signal	1	-	1	-	-
Cruise Control Set/Coast Switch Signal	1	-	1	-	-
1. Cruise Control Malfunction					

Circuit/System Description

The cruise control switch is an input to the body control module (BCM). The BCM monitors the cruise control on/off, set/coast, the resume/accelerate and cancel switches via the cruise control switch signal circuit in order to detect when the driver has requested to perform a cruise control function. The BCM detects a predetermined voltage signal when a cruise control function switch is applied, with each switch having a different voltage value.

Conditions for Running the DTC

- The engine is running.
- The cruise switch is ON.

Conditions for Setting the DTC

- The ECM detects an invalid voltage signal on the cruise control switch signal circuit.
- The above condition is present for greater than 2 seconds.
- The ECM runs this diagnostic every 0.05 second.

Actions Taken When the DTC Sets

- The malfunction indicator lamp (MIL) will not illuminate.
- The cruise control system is disabled.

Conditions for Clearing the DTC

- The condition responsible for setting the DTC no longer exists.
- A history DTC will clear after 40 malfunction-free ignition cycles have occurred.

Reference Information

Schematic Reference

Cruise Control Schematics

Connector End View Reference

Component Connector End Views

Description and Operation

Cruise Control Description and Operation

Electrical Information Reference

- Circuit Testing
- Connector Repairs
- Testing for Intermittent Conditions and Poor Connections
- Wiring Repairs

Scan Tool Reference

Control Module References for scan tool information

Circuit/System Verification

Vehicle ON, while rotating the steering wheel to both steering stops, observe the scan tool Cruise Control Switch parameter while pressing each of the cruise control switches. The parameter should toggle between On, Off, Resume and Set as the applicable switch is pressed.

Circuit/System Testing

1. Vehicle OFF, disconnect the harness connector at the S70L steering wheel controls switch-left.
2. Vehicle in Service Mode, test for B+ between the voltage reference circuit terminal 1 and ground.
   If less than the specified value, test the voltage reference circuit for a short to ground or an open/high resistance. If the circuit tests normal, replace the BCM.
3. Test for B+ between the voltage reference circuit terminal 1 and the signal circuit terminal 3.
   If less than the specified value, test the signal circuit for a short to voltage or an open/high resistance. If the circuit tests normal, replace the BCM.
4. Vehicle OFF, disconnect the X3 harness connector at the K9 BCM.
5. Test for infinite resistance between the signal circuit terminal 9 and ground.
   If less than the specified value, test the signal circuit for a short to ground.
6. If all circuits test normal, test or replace the S70L steering wheel controls switch-left.

Repair Instructions

Perform the Diagnostic Repair Verification after completing the repair.

Control Module References for BCM or ECM replacement, programming and setup

&#169© Copyright Chevrolet. All rights reserved

DTC P0571

Diagnostic Instructions

- Perform the Diagnostic System Check - Vehicle prior to using this diagnostic procedure.
- Review Strategy Based Diagnosis for an overview of the diagnostic approach.
- Diagnostic Procedure Instructions provides an overview of each diagnostic category.

DTC Descriptor

DTC P0571: Cruise Control Brake Switch Circuit

Circuit/System Description

The engine control module (ECM) monitors the brake pedal position sensor. When the brake pedal is applied, the ECM detects a predetermined voltage signal. The ECM sends a serial data message to the engine control module (BCM) indicating the status of the brake lamps.

This diagnostic test functions on the assumption that a sudden decrease in vehicle speed is caused by a brake pedal application. When the ECM detects that there is a 4.2 km/h (2.6 mph) or greater decrease in vehicle speed within 0.25 seconds without a transition of the stop lamp switch, the ECM sets DTC P0571.

Conditions for Running the DTC

- The engine speed is greater than 700 RPM.
- The traction control system or the antilock brake system are not active and have not failed.
- The vehicle speed is greater than 48 km/h (30 mph).
- The diagnostic will disable when the wheel speed is less than 16 km/h (10 mph).

Conditions for Setting the DTC

The BCM detects either a low voltage signal on the brake lamp switch signal circuit when the serial data message from the ECM indicates the brakes are applied, or a high voltage signal on the brake lamp switch signal circuit when the serial data message from the ECM indicates the brakes are not applied.

Actions Taken When the DTC Sets

- The cruise control system is disabled.
- The malfunction indicator lamp (MIL) will not illuminate.

Conditions for Clearing the DTC

- The condition responsible for setting the DTC no longer exists.
- A history DTC will clear after 40 malfunction-free ignition cycles have occurred.

Reference Information

Schematic Reference

- Cruise Control Schematics
- Exterior Lights Schematics
- Antilock Brake System Schematics

Connector End View Reference

Component Connector End Views

Description and Operation

Cruise Control Description and Operation

Electrical Information Reference

- Circuit Testing
- Connector Repairs
- Testing for Intermittent Conditions and Poor Connections
- Wiring Repairs

Scan Tool Reference

Control Module References for scan tool information

Circuit/System Verification

1. Vehicle OFF, disconnect the X1 harness connector as the ECM.
2. Connect a test lamp between the control circuit terminal 33 and ground.
3. Vehicle in Service Mode, verify the test lamp turns ON and OFF when pressing and releasing the brake pedal.
   If the test lamp is always ON, test the control circuit for a short to voltage. If the circuit tests normal, replace the BCM.
   If the test lamp is always OFF, test the control circuit for a short to ground or an open/high resistance. If the circuit tests normal, replace the BCM.
4. If all test normal, replace the ECM.

Repair Instructions

Perform the Diagnostic Repair Verification after completing the repair.

Control Module References for BCM or ECM replacement, programming and setup

&#169© Copyright Chevrolet. All rights reserved

DTC P0703

Diagnostic Instructions

- Perform the Diagnostic System Check - Vehicle prior to using this diagnostic procedure.
- Review Strategy Based Diagnosis for an overview of the diagnostic approach.
- Diagnostic Procedure Instructions provides an overview of each diagnostic category.

DTC Descriptor

DTC P0703: Brake Switch Circuit 2

Circuit/System Description

The engine control module (ECM) monitors the brake pedal position sensor. When the brake pedal is applied, the ECM detects a predetermined voltage signal. The ECM sends a serial data message to the body control module (BCM) indicating the status of the stop lamps.

Conditions for Running the DTC

The engine is ON.

Conditions for Setting the DTC

- The BCM receives an invalid brake pedal status serial data message from the ECM.
- This diagnostic runs continuously.

Actions Taken When the DTC Sets

- The malfunction indicator lamp (MIL) will not illuminate.
- The cruise control system is disabled.

Conditions for Clearing the DTC

- The condition responsible for setting the DTC no longer exists.
- A history DTC will clear after 40 malfunction-free ignition cycles have occurred.

Reference Information

Schematic Reference

Cruise Control Schematics

Connector End View Reference

Component Connector End Views

Description and Operation

Cruise Control Description and Operation

Electrical Information Reference

- Circuit Testing
- Connector Repairs
- Testing for Intermittent Conditions and Poor Connections
- Wiring Repairs

Scan Tool Reference

Control Module References for scan tool information

Circuit/System Verification

1. Verify that DTC P0571 is not set.
   If the brake system or brake lights do not operate properly, refer to DTC P0571 .
2. Verify that DTC P0703 is not set.
   If DTC P0703 is set, replace the K20 ECM. Clear the DTC and road test the vehicle. If DTC P0703 resets, replace the K9 BCM.

Repair Instructions

Perform the Diagnostic Repair Verification after completing the diagnostic procedure.

Control Module References for BCM or ECM replacement, setup, and programming

&#169© Copyright Chevrolet. All rights reserved

Symptoms - Cruise Control

Note: The following steps must be completed before using the symptom tables.

1. Before using the symptom diagnostic table, perform the Diagnostic Trouble Code (DTC) List - Vehicle in order to verify the following conditions:
   - There are no DTCs set.
   - The module can communicate via the serial data.
2. Review the system operation in order to understand the system functions. Refer to Cruise Control Description and Operation .

Visual/Physical Inspection

- Inspect for aftermarket devices which can affect the operation of the cruise control system. Refer to Checking Aftermarket Accessories .
- Inspect the accessible system components or the visible system components for obvious damage or for obvious conditions which can cause the symptom.

Intermittent

Faulty electrical connections or wiring may be the cause of intermittent conditions. Refer to Testing for Intermittent Conditions and Poor Connections .

Symptom List

Refer to Cruise Control Malfunction in order to diagnose the symptom.

&#169© Copyright Chevrolet. All rights reserved

Cruise Control Indicator Malfunction

Diagnostic Instructions

- Perform the Diagnostic System Check - Vehicle prior to using this diagnostic procedure.
- Review Strategy Based Diagnosis for an overview of the diagnostic approach.
- Diagnostic Procedure Instructions provides an overview of each diagnostic category.

Circuit/System Description

The instrument panel cluster (IPC) illuminates the cruise control engaged indicator based on serial data messages received from the engine control module (BCM) or the powertrain control module (ECM). The indicator is commanded ON when the cruise control switch is turned ON and turned OFF with the system disengaged.

Diagnostic Aids

This diagnostic assumes the cruise control system is functioning normally and there are no DTCs set. If the cruise control system is malfunctioning, refer to Cruise Control Malfunction .

Reference Information

Schematic Reference

- Cruise Control Schematics
- Instrument Cluster Schematics

Connector End View Reference

Component Connector End Views

Description and Operation

Cruise Control Description and Operation

Electrical Information Reference

- Circuit Testing
- Connector Repairs
- Testing for Intermittent Conditions and Poor Connections
- Wiring Repairs

Scan Tool Reference

Control Module References for scan tool information

Circuit/System Verification

Vehicle in Service Mode, perform the All Indicators test. Verify the cruise control indicator illuminates.

If the indicator does not illuminate, replace the P16 instrument cluster.

Repair Instructions

Perform the Diagnostic Repair Verification after completing the repair.

Control Module References for Instrument Cluster replacement, programming and setup

&#169© Copyright Chevrolet. All rights reserved

Cruise Control Malfunction

Diagnostic Instructions

- Perform the Diagnostic System Check - Vehicle prior to using this diagnostic procedure.
- Review Strategy Based Diagnosis for an overview of the diagnostic approach.
- Diagnostic Procedure Instructions provides an overview of each diagnostic category.

Diagnostic Fault Information

Circuit	Short to Ground	Open/High Resistance	Short to Voltage	Signal Performance
B+ Voltage Reference	1	B3794 08	B3794 59	B3794 08
Cruise Control Switch Signal	1	B3794 08	B3794 01	B3794 08
1. Cruise Control Malfunction				

Circuit/System Description

The cruise control switch is an input to the body control module (BCM). The BCM monitors the cruise control on/off, set/coast, resume/accelerate and cancel switches via the cruise control switch signal circuit in order to detect when the driver has requested to perform a cruise control function. The BCM detects a specific voltage signal on the cruise control switch signal circuit when a switch is applied. The engine control module (ECM) receives the requested cruise control switch function from the BCM via a serial data message.

Reference Information

Schematic Reference

Cruise Control Schematics

Connector End View Reference

Component Connector End Views

Description and Operation

Cruise Control Description and Operation

Electrical Information Reference

- Circuit Testing
- Connector Repairs
- Testing for Intermittent Conditions and Poor Connections
- Wiring Repairs

Scan Tool Reference

Control Module References for scan tool information

Circuit/System Verification

Engine ON, while rotating the steering wheel to both steering stops, observe the scan tool Cruise Control Switch parameter while pressing each of the cruise control switches. The parameter should toggle between On, Off, Resume and Set as the applicable switch is pressed.

Circuit/System Testing

1. Vehicle OFF, disconnect the harness connector at the K20 steering wheel control switch-left.
2. Vehicle in Service Mode, test for B+ between the voltage reference circuit and ground.
   If less than the specified value, test the voltage reference circuit for a short to ground or an open/high resistance. If the circuit tests normal, replace the BCM.
3. Test for B+ between the voltage reference circuit and the signal circuit.
   If less than the specified value, test the signal circuit for a short to voltage or an open/high resistance. If the circuit tests normal, replace the BCM.
4. Vehicle OFF, disconnect the X3 harness connector at the K9 BCM.
5. Test for infinite resistance between the signal circuit terminal 9 and ground.
   If less than the specified value, test the signal circuit for a short to ground.
6. If all circuits test normal, test or replace the K20 steering wheel control switch-left.

Repair Instructions

Perform the Diagnostic Repair Verification after completing the diagnostic procedure.

Control Module References for BCM replacement, programming and setup

&#169© Copyright Chevrolet. All rights reserved

Cruise Control Switch Replacement

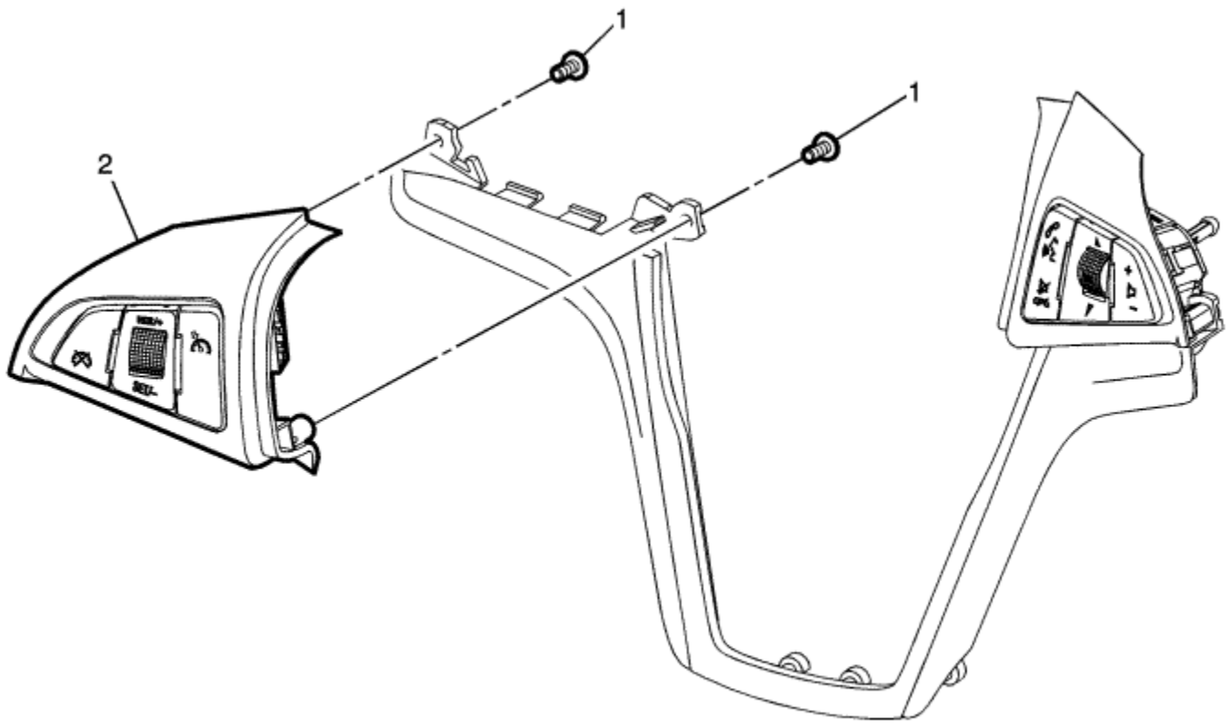

Callout	Component Name
Preliminary Procedure Remove the steering wheel lower cover. Refer to Steering Wheel Spoke Lower Cover Replacement .	
1	Steering Wheel Lower Cover Fastener (Qty: 2)

	Caution: Refer to Fastener Caution in the Preface section.
2	Cruise Control Switch Assembly **Procedure** Disconnect the electrical connector.

© Copyright Chevrolet. All rights reserved

Cruise Control Description and Operation

Cruise control is a speed control system that maintains a desired vehicle speed under normal driving conditions at speeds above 40 km/h (25 mph). Steep grades may cause variations in the selected vehicle speeds.

The following are the main components of the cruise control system:

- The accelerator pedal
- The brake pedal position (BPP) sensor
- The body control module (BCM)
- The cruise control on/off switch
- The cruise control cancel switch
- The + RES switch
- The - SET switch
- The engine control module (ECM)
- The throttle actuator control (TAC) motor
- The vehicle speed sensor (VSS)

The body control module (BCM) monitors the signal circuit of the cruise control switches, which are located on the steering wheel. The BCM relays the cruise control switch status to the engine control module (ECM) via the serial data circuit. The ECM uses the status of the cruise control switch to determine when to capture and maintain the vehicle speed. The ECM monitors the vehicle speed signal circuit in order to determine the desired vehicle speed. The ECM uses the TAC motor in order to maintain the vehicle speed.

Voltage is supplied to the cruise control switch via the steering wheel control switch reference voltage circuit supplied by the BCM. The cruise control function switches are arranged in a resistive ladder design, with each cruise control function switch having a different resistance value. The BCM detects a specific voltage value that is associated with the cruise control function switch being activated. When the normally open cruise control on/off switch is turned ON, the switch closes and the BCM supplies a ground to the cruise control switch ON indicator circuit as it becomes illuminated. The BCM sends a GMLAN serial data message to the ECM indicating that the on/off switch is active. Similarly, when the normally open + RES switch or the normally open - SET switch are pressed, the switch closes and the BCM detects the predetermined voltage signal on the cruise control resume/accel and set/coast switch signal circuit. The BCM sends a GMLAN serial data message to the ECM indicating that the + RES switch or the - SET switch is active. The + RES switch or the - SET switch will remain inactive when the BCM has not received the predetermined voltage signal from the on/off switch.

Cruise Control Engaged

The cruise control system will engage and adjust vehicle speeds, based on the activation of the following cruise control switches:

- On/off
- + RES
- - SET

To engage the Cruise Control System, ensure that the vehicle speed is above 40.2 km/h (25 mph), turn the cruise On/Off switch ON and momentarily press the - SET switch. The ECM will engage the Cruise Control System and record the vehicle speed. The ECM sends a GMLAN serial data message to the instrument panel cluster (IPC) in order to illuminate the Cruise Engaged indicator in the IPC.

Pressing the accelerator pedal while the cruise control system is engaged, allows the driver to override the cruise control system in order to accelerate the vehicle beyond the current set vehicle speed. When the accelerator pedal is released, the vehicle will decelerate and resume the current set vehicle speed. The driver can also override the current set vehicle speed via the - SET switch and the + RES switch. When the cruise control system is engaged, pressing and holding the - SET switch will allow the vehicle to decelerate from the current set vehicle speed without deactivating the cruise control system. When the - SET switch is released, the ECM will record the vehicle speed and maintain the vehicle speed as the new set vehicle speed. When the cruise control system is engaged, momentarily pressing the - SET switch will allow the vehicle to decelerate at 1.6 km/h (1 mph) increments for each time that the - SET is momentarily pressed, with a minimum vehicle speed of 37 km/h (23 mph).

Pressing and holding the + RES switch, when the cruise control system is engaged, will allow the vehicle to accelerate to a greater vehicle speed than the current set vehicle speed. When the + RES switch is released, the ECM will record the vehicle speed and maintain the vehicle speed as the new set vehicle speed. When the cruise control system is engaged, momentarily pressing the + RES switch will allow the vehicle to accelerate at 1.6 km/h (1 mph) increments for each time that the + RES switch is momentarily pressed, with the maximum acceleration total of 16 km/h (10 mph) over the current set vehicle speed. Momentarily activating the + RES switch will recall the previous vehicle speed, after the cruise control system is disengaged by pressing the brake pedal or CANCEL switch.

Cruise Control Disengaged

The engine control module (ECM) disengages the cruise control operation based on the signals from the following switches:

- The brake pedal position (BPP) sensor
- The cruise control on/off switch
- The cruise control cancel switch

The Cruise Control System will disengage when the brake pedal is applied. The body control module (BCM) monitors the BPP sensor via the BPP sensor signal circuit as the voltage signal increases while the pedal reaches the fully applied position. The ECM monitors the BPP signal through a discrete input and a GMLAN serial data message signal from the BCM indicating the brake status. When both signals indicate the brake pedal is applied, the ECM will disengage the cruise control system.

The Cruise Control System will also disengage when the cruise control on/off switch is switched OFF, or the cruise control cancel switch is activated. The body control module (BCM) determines when the cruise control cancel switch is activated. When the normally open cancel switch is closed, the BCM detects the predetermined voltage signal on the cruise control function switch circuit. The vehicle speed stored in the memory of the engine control module will be erased when the cruise control On/Off switch is turned OFF, or the ignition switch is turned OFF. The BCM sends a GMLAN serial data message to the ECM in order to disengage the cruise control system. The Cruise Control System will disengage when the ECM detects that a driver override function has been active for approximately 60 seconds. When the Cruise Control System has been disengaged, the ECM sends a GMLAN serial message to the instrument panel cluster (IPC) in order to turn OFF the Cruise Engaged indicator.

Every time the cruise control system is disengaged, the ECM will keep track of the reason for system disengagement. The last 8 disengagement reasons will be recorded

within the ECM memory. The scan tool will display the last 8 Cruise Disengage History parameters, in which one out of approximately 50 possible reasons will be displayed in each of these 8 parameters. For the disengagement reason to be displayed within the scan tool parameter either the cruise control system is active and disengagement is requested, or engagement of the system is requested but a fault is present. For a list of each disengagement reason along with each definition, refer to Engine Control Module Scan Tool Information .

Cruise Control Inhibited

The engine control module (ECM) inhibits the cruise control operation when any of the following conditions exist:

- A cruise control system DTC has been set.
- The vehicle speed is less than 40.2 km/h (25 mph).
- The vehicle speed is too high.
- The vehicle is in PARK, REVERSE, NEUTRAL, or 1st gear.
- The engine RPM is too low.
- The engine RPM is too high.
- The system voltage is not between 9-16 V.
- The antilock brake system (ABS) / traction control system (TCS) is active for more than 2 seconds.

&#169© Copyright Chevrolet. All rights reserved

Temperature Versus Resistance

°C	°F	ECT or RCT Ohms	IAT Ohms
Temperature vs Resistance Values (Approximate)			
100	212	155	197
90	194	208	255
80	176	283	336
70	158	392	447
60	140	552	605
50	122	793	833
45	113	958	995
40	104	1165	1166
35	95	1425	1395
30	86	1755	1663
25	77	2176	1995
20	68	2717	2420
15	59	3428	2995
10	50	4356	3601
5	41	5578	4600
0	32	7198	5490
-5	23	9362	7201
-10	14	12278	8594
-15	5	16229	9185
-20	-4	21653	13846
-30	-22	39631	23026
-40	-40	75529	39656

© Copyright Chevrolet. All rights reserved

Altitude Versus Barometric Pressure

Altitude Measured in Meters (m)	Altitude Measured in Feet (ft)	Barometric Pressure Measured in Kilopascals (kPa)	Barometric Pressure Measured in Pounds Per Square Inch (psi)
Determine your altitude by contacting a local weather station or by using another reference source.			
4 267	14,000	56-64	8.1-9.3
3 962	13,000	58-66	8.4-9.6
3 658	12,000	61-69	8.8-10.0
3 353	11,000	64-72	9.3-10.4
3 048	10,000	66-74	9.6-10.7
2 743	9,000	69-77	10.0-11.2
2 438	8,000	71-79	10.3-11.5
2 134	7,000	74-82	10.7-11.9
1 829	6,000	77-85	11.2-12.3
1 524	5,000	80-88	11.6-12.8
1 219	4,000	83-91	12.0-13.2
914	3,000	87-95	12.6-13.8
610	2,000	90-98	13.1-14.2
305	1,000	94-102	13.6-14.8
0	0 Sea Level	96-104	13.9-15.1
-305	-1,000	101-105	14.6-15.2

© Copyright Chevrolet. All rights reserved

Ignition System Specifications

Application	Specification	
	Metric	English
Ignition Type	Ignition Coil Module	
Firing Order	1-3-4-2	
Spark Plug Torque	25 N·m	18 lb ft
Spark Plug Gap	0.70 mm	0.027 in
Spark Plug Type	Refer to Electronic Parts Catalogue	

© Copyright Chevrolet. All rights reserved

Fastener Tightening Specifications

Application	Specification	
	Metric	English
300-Volt Cable Connector Fastener	8 N·m	71 lb in
Accessory DC Power Control Module Nuts	22 N·m	195 lb in
Accessory DC Power Control Module Bolts	19 N·m	168 lb in
Accelerator Pedal Fastener	9 N·m	80 lb in
Battery Cover Fastener	9 N·m	80 lb in
Battery Energy Control Module Fastener	9 N·m	80 lb in
Battery Hold Down Fastener	9 N·m	80 lb in
Battery Tray Fastener (1)	58 N·m	43 lb ft
Battery Tray Fastener (2)	22 N·m	16 lb ft
Bus Bar Fastener	9 N·m	80 lb in
Camshaft Position Actuator Solenoid Valve Fasteners	8 N·m	71 lb in
Camshaft Position Sensor Fasteners	8 N·m	71 lb in
Circuit Breaker Fastener	6 N·m	53 lb in
Coolant Fitting Fasteners	3 N·m	27 lb in
Coolant Hose Clamp	4 N·m	35 lb in
Crankshaft Position Sensor Fastener	8 N·m	71 lb in
Drive Motor Battery Current Sensor Fastener	9 N·m	80 lb in
Drive Motor Generator Power Inverter Module Cover Fastener	9 N·m	80 lb in
Drive Motor Generator Power Inverter Module Circuit Harness Fastener	9 N·m	80 lb in
Drive Motor Generator Power Inverter Control Module Fastener	9 N·m	80 lb in
Engine Control Module Bracket Fasteners	9 N·m	80 lb in
Evaporative Emission Canister Purge Solenoid Fastener	10 N·m	89 lb in
Evaporative Emission Canister Vent Valve Fastener	7 N·m	62 lb in
Fuel Injection Fuel Rail Fasteners	8 N·m	71 lb in
Fuel Pump Flow Control Module Fastener	10 N·m	89 lb in

Fuel Tank Filler Pipe Fastener	9 N·m	80 lb in
Filler Tank Filler Hose Clamps	4 N·m	35 lb in
Fuel Tank Strap Fasteners	20 N·m	15 lb ft
Ground Strap Fastener	8 N·m	71 lb in
Heated Oxygen Sensor 1 and 2	42 N·m	31 lb ft
High Voltage Disconnect Housing Fastener	9 N·m	80 lb in
Ignition Coil Fasteners	8 N·m	71 lb in
Junction Block Relay Fastener	9 N·m	80 lb in
Junction Block Relay Ground Fastener	9 N·m	80 lb in
Knock Sensor Fastener	20 N·m	15 lb ft
Liquid Fuel Pressure Sensor	19 N·m	14 lb ft
Manifold Absolute Pressure Sensor Fastener	5 N·m	44 lb in
Spark Plugs	25 N·m	18 lb ft
Throttle Body Fastener	8 N·m	71 lb in

© Copyright Chevrolet. All rights reserved

Adhesives, Fluids, Lubricants, and Sealers

Application	Type of Material	GM Part Number	
		United States	Canada
All Purpose Parts Cleaner	Cleaner	12378553	88900920
Anti-Seize Compound	Lubricant	88862477	88862478
Engine Oil	5W-30 Oil - Synthetic	12345610	993193

© Copyright Chevrolet. All rights reserved

Engine Controls Schematics

Figure 1: Power, Ground, MIL and Data Communication
Figure 2: 5-Volt and Low Reference Busses
Figure 3: Engine Data Sensors - Pressure and Temperature
Figure 4: Engine Data Sensors - Oxygen Sensors
Figure 5: Engine Data Sensors - Throttle Controls
Figure 6: Ignition Controls - Ignition Coil Module
Figure 7: Ignition Controls - Sensors
Figure 8: Fuel Controls -- Fuel Pump Controls
Figure 9: Fuel Controls - Fuel Injectors
Figure 10: Fuel Controls - Evaporative Emission Controls
Figure 11: Controlled/Monitored Subsystem References

© Copyright Chevrolet. All rights reserved

DTC P0010 or P0013

Diagnostic Instructions

- Perform the Diagnostic System Check - Vehicle prior to using this diagnostic procedure.
- Review Strategy Based Diagnosis for an overview of the diagnostic approach.
- Diagnostic Procedure Instructions provides an overview of each diagnostic category.

DTC Descriptors

DTC P0010: Inlet Camshaft Position Actuator Solenoid Valve Control Circuit

DTC P0013: Exhaust Camshaft Position Actuator Solenoid Valve Control Circuit

Diagnostic Fault Information

Circuit	Short to Ground	Open/High Resistance	Short to Voltage	Signal Performance
Inlet Actuator Solenoid Control	P0010	P0010, P0011	P0010	P0011
Exhaust Actuator Solenoid Control	P0013	P0013, P0014	P0013	P0014
Inlet Actuator Solenoid Low Reference	-	P0010, P0011	-	P0011
Exhaust Actuator Solenoid Low Reference	-	P0013, P0014	-	P0014

Circuit/System Description

The camshaft position (CMP) actuator system enables the engine control module (ECM) to change the timing of the camshaft while the engine is operating. The ECM controls the camshaft position actuator magnet duty cycle by controlling the amount of ON time. The magnet controls the amount of engine oil flow to the CMP actuator by extending a pintle within the solenoid. The pintle acts against a spool valve in the CMP actuator mechanism which is attached to the front of the camshaft. As the spool valve is moved, oil is directed to the CMP actuator, which rotates the camshaft. The ECM can only command the camshaft position actuator to retard the valve timing from the camshaft park position, or advance the valve timing back to the park position. The ECM controls the camshaft position actuator magnet by supplying a 12 V pulse width modulated (PWM) signal. The ECM supplies a ground to the low reference circuit.

Conditions for Running the DTC

- The engine is running.
- The ignition voltage is greater than 11 V.
- The camshaft position actuator is commanded ON.
- The DTCs run continuously when the above conditions are met.

Conditions for Setting the DTC

The ECM detects that the commanded state of the driver and the actual state of the control circuit do not match for greater than 5 s.

Action Taken When the DTC Sets

DTCs P0010 and P0013 are Type B DTCs.

Conditions for Clearing the DTC

DTCs P0010 and P0013 are Type B DTCs.

Diagnostic Aids

If the condition is intermittent, move the related harnesses and connectors, with the engine running, while monitoring the scan tool Camshaft Position Actuator Solenoid Valve Control Circuit status parameters. The circuit status parameters will change from OK, or Not Run, to Malfunction if there is a condition with the circuit or connection.

Reference Information

Schematic Reference

Engine Controls Schematics

Connector End View Reference

Component Connector End Views

Description and Operation

- Camshaft Actuator System Description
- Hybrid Modes of Operation Description

Electrical Information Reference

- Circuit Testing
- Connector Repairs
- Testing for Intermittent Conditions and Poor Connections
- Wiring Repairs

DTC Type Reference

Powertrain Diagnostic Trouble Code (DTC) Type Definitions

Scan Tool Reference

Control Module References for scan tool information

Circuit/System Verification

1. Engine running, observe the scan tool control circuit status parameters listed below:
   - Inlet/Exhaust Camshaft Position Actuator Solenoid Valve Control Circuit High Voltage Test Status
   - Inlet/Exhaust Camshaft Position Actuator Solenoid Valve Control Circuit Open Test Status
   - Inlet/Exhaust Camshaft Position Actuator Solenoid Valve Control Circuit Low Voltage Test Status

   Each parameter should display OK or Not Run.
2. Operate the vehicle within the conditions for running the DTC to verify the DTC does not reset. You may also operate the vehicle within the conditions that you observed from the freeze frame/failure records data.

Circuit/System Testing

1. Vehicle OFF, disconnect the harness connector at the appropriate Q6 camshaft position actuator solenoid valve.

   Note: A test lamp must be used for this test. The control circuit is pulled-up to a low current voltage. The current is too low to illuminate a test lamp. A voltage on the control circuit is normal.

2. Vehicle in Service Mode, verify that a test lamp does not illuminate between the control circuit terminal 2 and ground.
   If the test lamp illuminates, test the control circuit for a short to voltage. If the circuit tests normal, replace the ECM.
3. Vehicle OFF, all systems OFF. It may take up to 2 minutes for all vehicle systems to power down. Test for less than 5 Ω between the low reference circuit terminal 1 and ground.
   If greater than the specified value, test the low reference circuit for an open/high resistance. If the circuit tests normal, replace the ECM.
4. Connect the DMM negative lead to the control circuit terminal 2. Connect the DMM positive lead to B+. Set the DMM on the diode setting. Command the CMP Actuator Solenoid Valve ON and OFF with a scan tool. The DMM should transition from OL when commanded OFF to less than 1 V when commanded ON.
   If the circuit voltage does not correspond to the specified values, test the control circuit for an open/high resistance or a short to ground. If the circuit tests normal,

replace the ECM.

5. If all circuits/connections test normal, test or replace the Q6 camshaft position actuator solenoid valve.

Component Testing

Static Test

1. Vehicle OFF, disconnect the harness connector at the appropriate Q6 camshaft position actuator solenoid valve.
2. Test for 5.0-9.0 Ω between the solenoid control terminal 2 and the low reference terminal 1 at the camshaft position actuator solenoid valve.
   If not within the specified range, replace the Q6 camshaft position actuator solenoid valve.
3. Test for infinite resistance between each terminal of the solenoid and the solenoid housing.
   If not the specified value, replace the Q6 camshaft position actuator solenoid valve.

Dynamic Test

1. Remove the appropriate Q6 camshaft position actuator solenoid valve.
2. Install a 10 A fused jumper wire between the control circuit terminal 2 and 12 V. Momentarily install a jumper wire between the low reference terminal 1 and ground. The pintle should extend.

   Note:
   - The camshaft position actuator solenoid pintle should be facing downward for this test.
   - Do not allow electrical current to flow through the camshaft position actuator solenoid for greater than 1-2 s.

   If the function does not perform as specified, replace the Q6 camshaft position actuator solenoid valve.

Repair Instructions

Perform the Diagnostic Repair Verification after completing the diagnostic procedure.

- Camshaft Position Actuator Solenoid Valve Replacement : Exhaust → Intake
- Control Module References for replacement, setup and programming

&#169© Copyright Chevrolet. All rights reserved

DTC P0011 or P0014

Diagnostic Instructions

- Perform the Diagnostic System Check - Vehicle prior to using this diagnostic procedure.
- Review Strategy Based Diagnosis for an overview of the diagnostic approach.
- Diagnostic Procedure Instructions provides an overview of each diagnostic category.

DTC Descriptors

DTC P0011: Inlet Camshaft Position System Performance

DTC P0014: Exhaust Camshaft Position System Performance

Diagnostic Fault Information

Circuit	Short to Ground	Open/High Resistance	Short to Voltage	Signal Performance
Inlet Actuator Solenoid Control	P0010	P0010, P0011	P0010	P0011
Exhaust Actuator Solenoid Control	P0013	P0013, P0014	P0013	P0014
Inlet Actuator Solenoid Low Reference	-	P0010, P0011	-	P0011
Exhaust Actuator Solenoid Low Reference	-	P0013, P0014	-	P0014

Circuit/System Description

The camshaft position (CMP) actuator system enables the engine control module (ECM) to change the timing of the camshaft while the engine is operating. The ECM controls the camshaft position actuator magnet duty cycle by controlling the amount of ON time. The magnet controls the amount of engine oil flow to the CMP actuator by extending a pintle within the solenoid. The pintle acts against a spool valve in the CMP actuator mechanism which is attached to the front of the camshaft. As the spool valve is moved, oil is directed to the CMP actuator, which rotates the camshaft. The ECM can only command the camshaft position actuator to retard the valve timing from the camshaft park position, or advance the valve timing back to the park position. The ECM controls the camshaft position actuator magnet by supplying a 12 V pulse width modulated (PWM) signal. The ECM supplies a ground to the low reference circuit.

Conditions for Running the DTC

- DTCP0010, P0013, P0016, P0017, P0335, P0336, P0340, P0341, P0365, or P0366 is not set.
- The engine is running.
- The ignition voltage is greater than 11 V.
- The CMP actuator is enabled and commanded greater than 0°.
- The rate of change in the camshaft position is less than 3° for 4 s.

Conditions for Setting the DTC

The ECM detects a difference of greater than 8° between the camshaft position angle position and the desired camshaft position for greater than 30 s.

Action Taken When the DTC Sets

- DTCs P0011 and P0014 are Type B DTCs.
- The CMP actuator solenoid valve - inlet and CMP actuator solenoid valve - exhaust are commanded to the park position.

Conditions for Clearing the DTC

DTCs P0011 and P0014 are Type B DTCs.

Diagnostic Aids

- The engine oil condition has a major impact on the camshaft actuator system.
- A low oil level condition may set this DTC. The engine may require an oil change. Inquire with the customer when the last oil change was performed. You may also monitor the scan tool Engine Oil Life Remaining parameter. Advise the customer an oil change may be required.
- Inspect the engine for any recent engine mechanical repairs. An incorrectly installed camshaft, camshaft actuator, or timing belt can cause this DTC to set.
- A resistance on either circuit greater than 8 Ω on the inlet or exhaust CMP actuator solenoid valve control circuit may set this DTC. If you suspect high resistance, ground the control circuit while the engine is idling. The scan tool Inlet or Exhaust CMP Actuator Solenoid Valve Control Circuit Low Voltage Test Status parameter should display Malfunction. If the parameter displays OK, test the control circuit for high resistance.

Reference Information

Schematic Reference

Engine Controls Schematics

Connector End View Reference

Component Connector End Views

Description and Operation

- Camshaft Actuator System Description
- Hybrid Modes of Operation Description

Electrical Information Reference

- Circuit Testing
- Connector Repairs
- Testing for Intermittent Conditions and Poor Connections
- Wiring Repairs

DTC Type Reference

Powertrain Diagnostic Trouble Code (DTC) Type Definitions

Scan Tool Reference

Control Module References for scan tool information

Circuit/System Verification

Note:

- The engine oil level and the oil pressure are critical to the correct operation of the camshaft position (CMP) actuator system. Verify that the engine has the correct oil level and the correct oil pressure before continuing with this diagnostic.
- The engine oil condition has a major impact on the camshaft actuator system. Debris in the oil can interfere with the camshaft position actuator solenoid and the mechanical camshaft actuator operation. Inspect for dirty or degraded crankcase oil. The engine may require an oil change. Inquire with the customer when the last oil change was performed. You may also monitor the scan tool Engine Oil Life Remaining parameter. Advise the customer an oil change may be required.

1. Verify the engine oil pressure. Refer to Oil Pressure Diagnosis and Testing
2. Vehicle in Service Mode, observe the DTC information with a scan tool. Verify DTC P0010, P0013, P0016, P0017, P0335, P0336, P0340, P0341, P0365, or P0366 is not set.
   If a DTC is set, refer to Diagnostic Trouble Code (DTC) List - Vehicle
3. Engine running at operating temperature, command the appropriate Inlet or Exhaust CMP Actuator to 20° with a scan tool. The Desired Inlet or Exhaust Camshaft Position parameter value should match the Inlet or Exhaust Camshaft Position angle parameter value.
4. Observe the Inlet or Exhaust Camshaft Position Variance value on the scan tool. The Inlet or Exhaust Camshaft Position Variance value will increment for several seconds until the Inlet or Exhaust Camshaft Position angle value matches the Desired Inlet or Exhaust Camshaft Position value. The Inlet or Exhaust Camshaft Position Variance value should then return to 0°.

5. Operate the vehicle within the conditions for running the DTC, to verify the DTC does not reset. You may also operate the vehicle within the conditions that you observed from the Freeze Frame/Failure Records data.

Circuit/System Testing

1. Vehicle OFF, disconnect the harness connector at the appropriate Q6 camshaft position actuator solenoid valve.
2. Vehicle OFF, all systems OFF. It may take up to 2 minutes for all vehicle systems to power down. Test for less than 2 Ω between the low reference circuit terminal 1 and ground.
   If greater than the specified value, test the low reference circuit for an open/high resistance. If the circuit tests normal, replace the ECM.

   Note: A test lamp must be used for this test. The control circuit is pulled-up to a low current voltage. The current is too low to illuminate a test lamp. A voltage on the control circuit is normal.

3. Vehicle in Service Mode, verify that a test lamp does not illuminate between the control circuit terminal 2 and ground.
   If the test lamp illuminates, test the control circuit for a short to voltage. If the circuit tests normal, replace the ECM.
4. Connect the DMM negative lead to the control circuit terminal 2. Connect the DMM positive lead to B+. Set the DMM on the diode setting. Command the CMP Actuator Solenoid ON and OFF with a scan tool. The DMM should transition from OL when commanded OFF to less than 1 V when commanded ON.
   If the circuit voltage does not correspond to the specified values, test the control circuit for an open/high resistance or a short to ground. If the circuit tests normal, replace the ECM.
5. Vehicle OFF, swap the appropriate Q6 camshaft position actuator solenoid valve with a Q6 camshaft position actuator solenoid valve that is operating correctly.

   Note: This step tests the mechanical camshaft position actuator which is part of the inlet and exhaust sprocket assembly.

6. Engine idling, command the appropriate Camshaft Position Actuator from 0° to 20° and back to zero while observing the appropriate scan tool Inlet/Exhaust Camshaft Position Variance parameters. The Inlet/Exhaust Camshaft Position Variance should be less than 2° in each of the commanded states.
   If greater than the specified value, replace the mechanical camshaft position actuator.
7. If all circuits and components test normal, replace the Q6 camshaft position actuator solenoid valve.

Component Testing

Static Test

1. Vehicle OFF, disconnect the harness connector at the appropriate Q6 camshaft position actuator solenoid valve.
2. Test for 5.0-9.0 Ω between the solenoid control terminal 2 and the low reference terminal 1 at the camshaft position actuator solenoid valve.
   If not within the specified range, replace the Q6 camshaft position actuator solenoid valve.
3. Test for infinite resistance between each terminal of the solenoid and the solenoid housing.
   If not the specified value, replace the Q6 camshaft position actuator solenoid valve.

Dynamic Test

1. Remove the appropriate Q6 camshaft position actuator solenoid valve.
2. Install a 10 A fused jumper wire between the control circuit terminal 2 and 12 V. Momentarily install a jumper wire between the low reference terminal 1 and ground. The pintle should extend.

Note:

- The camshaft position actuator solenoid pintle should be facing downward for this test.
- Do not allow electrical current to flow through the camshaft position actuator solenoid for greater than 1-2 s.

If the function does not perform as specified, replace the Q6 camshaft position actuator solenoid valve.

Repair Instructions

Perform the Diagnostic Repair Verification after completing the diagnostic procedure.

- Camshaft Position Actuator Solenoid Valve Replacement : Exhaust → Intake
- Camshaft Inlet and Exhaust Sprocket Replacement
- Control Module References for replacement, setup and programming

&#169© Copyright Chevrolet. All rights reserved

DTC P0016 or P0017

Diagnostic Instructions

- Perform the Diagnostic System Check - Vehicle prior to using this diagnostic procedure.
- Review Strategy Based Diagnosis for an overview of the diagnostic approach.
- Diagnostic Procedure Instructions provides an overview of each diagnostic category.

DTC Descriptors

DTC P0016: Crankshaft Position - Inlet Camshaft Position Not Plausible

DTC P0017: Crankshaft Position - Exhaust Camshaft Position Not Plausible

Circuit/System Description

The engine control module (ECM) uses the crankshaft position sensor and the CMP actuator solenoid valves sensor information to monitor the correlation between the crankshaft and the camshaft positions.

Conditions for Running the DTC

- DTCP0335, P0336, P0340, P0341, P0365, P0366, P0641 or P0651 is not set.
- The engine is cranking or running.
- The camshaft position actuator solenoid valves are in the parked position.
- The crankshaft and camshaft position signals are synchronised.
- The DTCs run continuously when the above conditions are met.

Conditions for Setting the DTC

The ECM detects the CMP actuator solenoid valve - inlet or CMP actuator solenoid valve - exhaust is greater than 10° before or after the nominal position for 4 out of 5 camshaft revolutions in relation to the crankshaft angle while the engine is spinning.

Action Taken When the DTC Sets

DTCs P0016 and P0017 are Type B DTCs.

Conditions for Clearing the DTC

DTCs P0016 and P0017 are Type B DTCs.

Diagnostic Aids

The following conditions can also set the DTC:

- A short to ground in a CMP actuator solenoid valve control circuit.
- Inspect the engine for any recent engine mechanical repairs. An incorrectly installed camshaft, camshaft actuator, CMP sensor, crankshaft position sensor, or timing chain.
- Excessive crankshaft end play.
- An actuator that is in the full advance or retard position.
- A crankshaft reluctor wheel that has moved in relationship to top dead centre (TDC).
- Observing the desired and actual camshaft angle parameters, with a scan tool before a DTC sets, may help to isolate whether a condition is specific to one camshaft, or caused by a condition with the crankshaft timing.

Reference Information

Schematic Reference

Engine Controls Schematics

Connector End View Reference

Component Connector End Views

Description and Operation

Camshaft Actuator System Description

Hybrid Modes of Operation Description

Electrical Information Reference

- Circuit Testing
- Connector Repairs
- Testing for Intermittent Conditions and Poor Connections
- Wiring Repairs

DTC Type Reference

Powertrain Diagnostic Trouble Code (DTC) Type Definitions

Scan Tool Reference

Control Module References for scan tool information

Circuit/System Verification

1. Vehicle in Service Mode, observe the DTC information with a scan tool. DTC P0010, P0011, P0013, P0014, P0335, P0336, P0340, P0341, P0365 or P0366 should not be set.
   If a DTC is set, refer to Diagnostic Trouble Code (DTC) List - Vehicle .
2. Engine idling at the normal operating temperature. DTCs P0016 or P0017 should not set.
   If a DTC sets, inspect for the following:
   - The correct installation of the Q6F CMP actuator solenoid valve - inlet or Q6E CMP actuator solenoid valve - exhaust
   - The correct installation of the B26 Crankshaft Position Sensor
   - A timing chain tensioner condition
   - An incorrectly installed timing chain
   - Excessive play in the timing chain
   - A timing chain that jumped teeth
   - A crankshaft reluctor wheel that has moved in relationship to top dead center (TDC) on the crankshaft
3. Operate the vehicle within the conditions for running the DTC to verify the DTC does not reset. You may also operate the vehicle within the conditions that are captured in the freeze frame/failure records data.

Repair Instructions

Perform the Diagnostic Repair Verification after completing the diagnostic procedure.

Camshaft Timing Chain Replacement

&#169© Copyright Chevrolet. All rights reserved

DTC P0030, P0036, P0053, P0054, P0135, or P0141

Diagnostic Instructions

- Perform the Diagnostic System Check - Vehicle prior to using this diagnostic procedure.
- Review Strategy Based Diagnosis for an overview of the diagnostic approach.
- Diagnostic Procedure Instructions provide an overview of each diagnostic category.

DTC Descriptors

DTC P0030: HO2S Heater Control Circuit Sensor 1

DTC P0036: HO2S Heater Control Circuit Sensor 2

DTC P0053: HO2S Heater Resistance Sensor 1

DTC P0054: HO2S Heater Resistance Sensor 2

DTC P0135: HO2S Heater Performance Sensor 1

DTC P0141: HO2S Heater Performance Sensor 2

Diagnostic Fault Information

Circuit	Short to Ground	High Resistance	Open	Short to Voltage	Signal Performance
HO2S Heater Voltage Supply	P0030, P0036, P0102, P0132, P0135, P0138, P0141, P0443, P0458, P0598, *	P0030, P0036, P0132, P0134, P0135, P0138, P0140, P0141	P0030, P0036, P0102, P0132, P0134, P0135, P0138, P0140, P0141, P0443, P0458, P0598	P0690	P0135, P0141
HO2S Heater Control	P0030, P0036, P0053, P0054, P0135, P0141	P0030, P0036, P0132, P0134, P0135, P0138, P0140, P0141	P0030, P0036, P0132, P0134, P0135, P0138, P0140, P0141	P0030, P0036, P0132, P0134, P0135, P0138, P0140, P0141	P0135, P0141

HO2S High Signal	P0131, P0137	P0132, P0134, P0138, P0140	P0132, P0134, P0138, P0140	P0132, P0134, P0138, P0140	P0133, P013A, P013B, P013E, P013F, P1133, P2A00
HO2S Low Signal	P0131, P0137	P0132, P0134, P0138, P0140	P0132, P0134, P0138, P0140	P0132, P0134, P0138, P0140	P0133, P013A, P013B, P013E, P013F, P1133, P2A00
*Opens Fuse					

Typical Scan Tool Data

HO2S 1 or 2 Heater

Circuit	Short to Ground	Open	Short to Voltage
Operating Conditions: **Engine Running** ***Parameter Normal Range:*** **0.3-2.5 A**			
Ignition Voltage	0 A	0 A	0.3-2.5 A
HO2S Heater Low Control	0 A	0 A	0 A

Circuit/System Description

The heated oxygen sensors (HO2S) are used for fuel control and post-catalyst monitoring. Each HO2S compares the oxygen content of the surrounding air with the oxygen content in the exhaust stream. Each HO2S must reach operating temperature to provide an accurate voltage signal. A heating element inside each of the HO2S minimises the time required for the sensor to reach operating temperature. Voltage is provided to the heater by an ignition voltage circuit through a fuse. With the engine running, ground is provided to the heater by the HO2S heater low control circuit, through a low side driver within the engine control module (ECM). The ECM uses pulse-width modulation (PWM) to control the HO2S heater operation to maintain a specific HO2S operating temperature range.

Conditions for Running the DTC

P0030 and P0036

- The ignition voltage is greater than 11 V.
- Engine speed is greater than 400 RPM.
- DTC P0030 and P0036 run continuously when the above conditions are met.

P0053 and P0054

- DTCsP0111, P0112, P0113, P0114, P0116, P0117, P0118, P0119, P0128, or P2610 are not set.

- The vehicle is OFF for greater than 8 h.
- The engine coolant temperature (ECT) and the inlet air temperature (IAT) are within 8°C (14°F).
- The ECT is between -30 to +45°C (-22 to +113°F).
- The ignition voltage is less than 32 V.
- The engine run time is less than 275 ms.
- DTC P0053 and P0054 run once per cold start-up when the above conditions are met.

P0135 and P0141

- DTCs P0116, P0117, P0118, P0119, or P0128 are not set.
- The ignition voltage is between 10-32 V.
- The HO2S heaters are at operating temperature.
- The scan tool HO2S Heater device control is not active.
- The commanded HO2S heater duty cycle is greater than 0 percent.
- DTC P0135 and P0141 run twice per ignition cycle when the above conditions are met for 120 s.

Conditions for Setting the DTC

P0030 and P0036

The ECM detects that the commanded state of the driver and the actual state of the control circuit do not match for greater than 7 s.

P0053 and P0054

The ECM detects the HO2S heater is not within a specified resistance range at engine start-up.

P0135 and P0141

The ECM detects the HO2S heater current is less than 0.30 A or greater than 2.5 A for more than 10 s.

Action Taken When the DTC Sets

DTC P0030, P0036, P0053, P0054, P0135, and P0141 are Type B DTCs.

Conditions for Clearing the DTC

DTC P0030, P0036, P0053, P0054, P0135, and P0141 are Type B DTCs.

Diagnostic Aids

- If the condition is intermittent, move the related harnesses and connectors, with the engine running, while monitoring the scan tool circuit status parameters for the component. The circuit status parameters change from OK or Not Run to Malfunction if there is a condition with the circuit or a connection.
- An open fuse in the HO2S heater circuit may be caused by the heater element in one of the sensors. The condition may not be present until the sensor operates for a period of time. If no fault is present in the heater circuit, monitor the amperage of each heater with a scan tool to determine if one of the heater elements is the cause of the open fuse. Inspect the sensor pigtail or the harness for contacting the exhaust system.

Reference Information

Schematic Reference

Engine Controls Schematics

Connector End View Reference

Component Connector End Views

Description and Operation

Hybrid Modes of Operation Description

Electrical Information Reference

- Circuit Testing
- Connector Repairs
- Testing for Intermittent Conditions and Poor Connections
- Wiring Repairs

DTC Type Reference

Powertrain Diagnostic Trouble Code (DTC) Type Definitions

Scan Tool Reference

Control Module References for scan tool information

Circuit/System Verification

1. Engine running at operating temperature, command the appropriate HO2S heater ON and OFF with a scan tool while observing the circuit test status parameters listed below.
   - HO2S 1 or 2 Heater Control Circuit Low Voltage Test Status
   - HO2S 1 or 2 Heater Control Circuit Open Test Status
   - HO2S 1 or 2 Heater Control Circuit High Voltage Test Status

   Each parameter should display OK or Not Run.
2. Observe the scan tool HO2S 1 or 2 Heater parameters. The amperage should be within 0.2-1.5 A.
3. Move the related wiring and connectors while observing the HO2S 1 or 2 Heater parameters with a scan tool. The parameters should not change with movement.
   If movement affects the parameter, repair the appropriate harness or connector.
4. Operate the vehicle within the Conditions for Running the DTC to verify the DTC does not reset. You may also operate the vehicle within the conditions that you observed from the Freeze Frame/Failure Records data.

Circuit/System Testing

1. Vehicle OFF, disconnect the harness connector at the appropriate B52 heated oxygen sensor.
2. Vehicle in Service Mode, verify that a test lamp illuminates between the ignition voltage circuit terminal listed below and ground.
   - B52 HO2S 1 terminal 1
   - B52 HO2S 2 terminal D

   If the test lamp does not illuminate, test the ignition voltage circuit for a short to ground or an open/high resistance. If the circuit tests normal and the ignition voltage circuit fuse is open, test all components connected to the ignition voltage circuit and replace as necessary.
3. Observe the scan tool HO2S 1 or 2 Heater Control Open Circuit Test Status parameter. The parameter should display Malfunction.
   If not the specified value, test the heater control circuit terminal listed below for a short to ground, or for a short to voltage. If the circuit tests normal, replace the K20 ECM.
   - B52 HO2S 1 terminal 2
   - B52 HO2S 2 terminal E
4. Connect a 3 A fused jumper wire between the appropriate heater control circuit terminal listed below and ground. Observe the scan tool HO2S 1 or 2 Heater Control Circuit Low Voltage Test Status parameter. The parameter should transition from OK to Malfunction.
   If not the specified value, test the heater control circuit terminal listed below for an open/high resistance. If the circuit tests normal, replace the K20 ECM.
   - B52 HO2S 1 terminal 2
   - B52 HO2S 2 terminal E
5. Vehicle OFF, connect a 10 A fused jumper wire between the appropriate heater control circuit terminal and ignition voltage circuit terminal listed below:
   - B52 HO2S 1 ignition voltage circuit terminal 1 to control circuit terminal 2
   - B52 HO2S 2 ignition voltage circuit terminal D to control circuit terminal E
6. Engine running, observe the HO2S 1 or 2 Control Circuit High Voltage Test Status parameter. The parameter should transition from Not Run to Malfunction.
   If not the specified value, test the control circuit and the ignition voltage circuit for high resistance. If the circuits test normal, replace the K20 ECM.
7. If all circuits test normal, test or replace the B52 heated oxygen sensor.

Repair Instructions

Perform the Diagnostic Repair Verification after completing the diagnostic procedure.

- Heated Oxygen Sensor Replacement - Sensor 1
- Heated Oxygen Sensor Replacement - Sensor 2
- Perform the scan tool Heated Oxygen Sensor Resistance Learn Reset after replacing a HO2S.
- Control Module References for ECM replacement, setup, and programming

&#169© Copyright Chevrolet. All rights reserved

DTC P0101

Diagnostic Instructions

- Perform the Diagnostic System Check - Vehicle prior to using this diagnostic procedure.
- Review Strategy Based Diagnosis for an overview of the diagnostic approach.
- Diagnostic Procedure Instructions provides an overview of each diagnostic category.

DTC Descriptor

DTC P0101: Mass Air Flow (MAF) Sensor Performance

Diagnostic Fault Information

Circuit	Short to Ground	High Resistance	Open	Short to Voltage	Signal Performance
Ignition Voltage	P0102, P121B	P0101, P0102	P0102	P0690	P0101
MAF Sensor Signal	P0102	P0102	P0101, P0102	P0102	P0101, P1101
MAF Control	P0101, P121B	P0101, P0102	P0101, P0102	P0101, P0102, P121C	-

Typical Scan Tool Data

MAF Sensor

Circuit	Short to Ground	Open	Short to Voltage
Operating Conditions: Vehicle ON, normal operating temperature and engine speed between 1,375 and 1,425 RPM ***Parameter Normal Range:*** 1,800-2,400 Hz			
Ignition Voltage	0 Hz	0 Hz	-
MAF Sensor Signal	0 Hz	0 Hz	0 Hz
MAF Control	-	0 Hz	-

Circuit/System Description

The mass air flow (MAF) sensor is integrated with the inlet air temperature (IAT) sensor. The MAF sensor is an air flow meter that measures the amount of air entering the engine. The engine control module (ECM) uses the MAF sensor signal to provide the correct fuel delivery for all engine speeds and loads. The air flow and engine speed are very dependent on the battery pack state of charge. A small quantity of air entering the engine indicates a low load condition. A large quantity of air entering the engine indicates a high load condition.

The ECM applies 5 volts to the MAF sensor on the MAF sensor signal circuit. The sensor uses the voltage to produce a frequency based on the inlet air flow through the sensor bore.

The MAF sensor is supplied power through the powertrain relay and a fuse. The ECM enables the MAF sensor only during engine run mode by grounding the MAF control circuit via a solid state devise called a driver. The driver is equipped with a feedback circuit that is pulled-up to a voltage. The ECM monitors the status of the driver. If the ECM detects an incorrect voltage for the commanded state of the driver, a MAF sensor supply voltage low side driver control circuit DTC is set.

Conditions for Running the DTC

- DTCs P0102, P0103, P0107, P0108, P0111, P0112, P0113, P0114, P0116, P0117, P0118, P0119, P0128, P0335, and P0336 are not set.
- The engine speed is between 500 and 8,000 RPM.
- The IAT Sensor is between -20 and +125°C (-4 and +257°F).
- The ECT Sensor is between -7 and +125°C (+19 and +257°F).
- The DTC runs continuously when the above conditions are met.

Conditions for Setting the DTC

The ECM detects that the MAF sensor signal is not within a predetermined range of the calculated MAF value.

Action Taken When the DTC Sets

DTC P0101 is a Type B DTC.

Conditions for Clearing the DTC

DTC P0101 is a Type B DTC.

Diagnostic Aids

- Inspect the harness of the MAF sensor to verify that it is not routed too close to the following components:
  - The ignition coil module
  - Any solenoids
  - Any relays
  - Any motors

- Any type of contamination on the MAF sensor heating elements will degrade the proper operation of the sensor. Certain types of contaminants act as a heat insulator, which will impair the response of the sensor to airflow changes. Water or snow can create the opposite effect, and cause the signal to increase rapidly. Inspect for any contamination, water intrusion, or debris on the sensing elements of the MAF sensor. If debris is present, clean the sensor. If the sensor cannot be cleaned, replace the sensor.
- A high resistance may cause a driveability concern before this DTC sets.
- Certain aftermarket air filters may cause this DTC to set.
- Certain aftermarket air induction systems may cause this DTC to set.
- Modifications to the air induction system may cause this DTC to set.

Reference Information

Schematic Reference

Engine Controls Schematics

Connector End View Reference

Component Connector End Views

Description and Operation

Hybrid Modes of Operation Description

Electrical Information Reference

- Circuit Testing
- Connector Repairs
- Testing for Intermittent Conditions and Poor Connections
- Wiring Repairs

DTC Type Reference

Powertrain Diagnostic Trouble Code (DTC) Type Definitions

Scan Tool Reference

Control Module References for scan tool information

Special Tools

J 38522 Variable Signal Generator.

For equivalent regional tools, refer to Special Tools : Diagnostic Tools .

Circuit/System Verification

Note: To ensure a proper engine load, this diagnostic should be performed when the Hybrid/EV Battery Pack Charge Remaning parameter is at least 40%.

1. Observe the DTC information with a scan tool. Verify that DTC P121B and P121C are not set.
   If any of the DTCs are set, refer to DTC P121B or P121C .
2. Vehicle ON, engine speed between 1,375 and 1,425 RPM, normal operating temperature. Verify the scan tool MAF Sensor parameter is between 1,800 and 2,400 Hz.
3. Operate the vehicle within the conditions for running the DTC to verify the DTC does not reset. You may also operate the vehicle within the conditions that you observed from the freeze frame/failure records data.

Circuit/System Testing

1. Verify the following conditions do not exist:
   - A dirty, restricted, or deteriorating air filter element
   - A leaking, loose, or cracked PCV pipe or seal
   - A restricted or collapsed air inlet duct
   - A misaligned, leaking, or damaged air inlet duct
   - Any objects blocking the air inlet probe of the B75B mass air flow/inlet air temperature sensor
   - Any contamination or debris on the sensing elements in the probe of the B75B mass air flow/inlet air temperature sensor
   - A cracked, damaged, or leaking B75B mass air flow/inlet air temperature sensor housing
   - Any water intrusion in the induction system
   - Any snow or ice build-up at the air cleaner or B75B mass air flow/inlet air temperature sensor in cold climates
   - Any vacuum leak
   - A B74 MAP sensor seal that is leaking, missing, or damaged
   - Q38 Throttle body for dirt, debris, and coking. Refer to Throttle Body Inspection and Cleaning .
   - A damaged Q38 throttle body blade or shaft
   - Missing, restricted, or leaking exhaust components. Refer to Symptoms - Engine Exhaust .

   If you find any of the above conditions, repair as necessary.
2. Vehicle OFF, disconnect the harness connector at the B75B mass air flow/inlet air temperature sensor.
3. Vehicle in Service Mode, test for 4.8-5.2 V between the signal circuit terminal 5 and ground.
   If less than the specified range, test the signal circuit for a short to ground or an open/high resistance. If the circuit tests normal, replace the K20 ECM.

If greater than the specified range, test the signal circuit for a short to voltage. If the circuit tests normal, replace the K20 ECM.

4. Verify that a test lamp illuminates between the ignition voltage circuit terminal 4 and ground.
   If the test lamp does not illuminate, test the ignition voltage circuit for a short to ground or an open/high resistance. If the circuit tests normal and the ignition voltage circuit fuse is open, test or replace the components on the ignition voltage circuit.
5. Connect the test lamp between the MAF control circuit terminal 2 and the ignition voltage circuit terminal 4.
6. Vehicle in Service Mode, command the MAF Sensor Supply Voltage Low Side Driver ON and OFF with a scan tool. The test lamp should turn ON and OFF when changing between the commanded states.
   If the test lamp is always ON, test the control circuit for a short to ground. If the circuit tests normal, replace the K20 ECM.
   If the test lamp is always OFF, test the control circuit for a short to voltage or an open/high resistance. If the circuit tests normal, replace the K20 ECM.
7. Vehicle OFF, connect the red lead of the J 38522 to the signal circuit terminal 5 at the harness connector. Connect the battery voltage supply to B+, and the black lead to ground.
8. Set the J 38522 to the following specifications.
   - Signal switch to 5 V
   - Frequency switch to 5 KHz
   - Duty Cycle switch to Normal

   Note: The engine may run rough and stall.

9. Vehicle ON, engine running, observe the scan tool MAF Sensor Hz parameter. The parameter should be between 4,950 and 5,025 Hz.
   If not within the specified range, replace the K20 ECM.
10. If all circuits test normal, test or replace the B75B mass air flow/intake air temperature sensor.

Repair Instructions

Perform the Diagnostic Repair Verification after completing the diagnostic procedure.

- Air Cleaner Element Replacement
- Mass Airflow Sensor with Inlet Air Temperature Sensor Replacement
- Throttle Body Assembly Replacement
- Control Module References for ECM replacement, setup, and programming

&#169© Copyright Chevrolet. All rights reserved

DTC P0102 or P0103

Diagnostic Instructions

- Perform the Diagnostic System Check - Vehicle prior to using this diagnostic procedure.
- Review Strategy Based Diagnosis for an overview of the diagnostic approach.
- Diagnostic Procedure Instructions provides an overview of each diagnostic category.

DTC Descriptors

DTC P0102: Mass Air Flow (MAF) Sensor Circuit Low Frequency

DTC P0103: Mass Air Flow (MAF) Sensor Circuit High Frequency

Diagnostic Fault Information

Circuit	Short to Ground	High Resistance	Open	Short to Voltage	Signal Performance
Ignition Voltage	P0102, P121B	P0101, P0102	P0102	P0690	P0101
MAF Sensor Signal	P0102	P0102	P0101, P0102	P0102	P0101, P1101
MAF Control	P0101, P121B	P0101, P0102	P0101, P0102	P0101, P0102, P121C	-

Typical Scan Tool Data

MAF Sensor

Circuit	Short to Ground	Open	Short to Voltage
Operating Conditions: Vehicle ON, normal operating temperature and engine speed between 1,375 and 1,425 RPM ***Parameter Normal Range:*** 1,800-2,400 Hz			
Ignition Voltage	0 Hz	0 Hz	-
MAF Sensor Signal	0 Hz	0 Hz	0 Hz
MAF Control	-	0 Hz	-

Circuit/System Description

The mass air flow (MAF) sensor is integrated with the inlet air temperature (IAT) sensor. The MAF sensor is an air flow meter that measures the amount of air entering the engine. The engine control module (ECM) uses the MAF sensor signal to provide the correct fuel delivery for all engine speeds and loads. The air flow and engine speed are very dependent on the battery pack state of charge. A small quantity of air entering the engine indicates a low load condition. A large quantity of air entering the engine indicates a high load condition.

The ECM applies 5 volts to the MAF sensor on the MAF sensor signal circuit. The sensor uses the voltage to produce a frequency based on the inlet air flow through the sensor bore.

The MAF sensor is supplied power through the powertrain relay and a fuse. The ECM enables the MAF sensor only during engine run mode by grounding the MAF control circuit via a solid state devise called a driver. The driver is equipped with a feedback circuit that is pulled-up to a voltage. The ECM monitors the status of the driver. If the ECM detects an incorrect voltage for the commanded state of the driver, a MAF sensor supply voltage low side driver control circuit DTC is set.

Conditions for Running the DTC

- The engine is running for greater than 1 s.
- The engine speed is greater than 300 RPM.
- The ignition voltage is greater than 10 V.
- The above conditions are met for greater than 1 s.
- These DTCs run continuously when the above conditions are met.

Conditions for Setting the DTC

P0102

The ECM detects that the MAF sensor signal is less than 1,800 Hz or 0 g/s for greater than 30 s.

P0103

The ECM detects that the MAF Sensor is greater than 14,500 Hz or 108 g/s for greater than 30 s.

Action Taken When the DTC Sets

DTCs P0102 and P0103 are Type B DTCs.

Conditions for Clearing the MIL/DTC

DTCs P0102 and P0103 are Type B DTCs.

Diagnostic Aids

- Verify the integrity of the air induction system by inspecting for the following conditions:
  - Any water intrusion in the induction system
  - Any contamination or debris on the sensing elements of the MAF sensor
  - Damaged components
- Verify that any electrical aftermarket devices are properly connected and grounded. Refer to Checking Aftermarket Accessories .

Reference Information

Schematic Reference

Engine Controls Schematics

Connector End View Reference

Component Connector End Views

Description and Operation

Hybrid Modes of Operation Description

Electrical Information Reference

- Circuit Testing
- Connector Repairs
- Testing for Intermittent Conditions and Poor Connections
- Wiring Repairs

DTC Type Reference

Powertrain Diagnostic Trouble Code (DTC) Type Definitions

Scan Tool Reference

Control Module References for scan tool information

Special Tools

J 38522 Variable Signal Generator.

For equivalent regional tools, refer to Special Tools : Diagnostic Tools

Circuit/System Verification

Note: To ensure a proper engine load, this diagnostic should be performed when the Hybrid/EV Battery Pack Charge Remaning parameter is at least 40%.

1. Observe the DTC information with a scan tool. Verify that DTC P121B and P121C are not set.
   If any of the DTCs are set, refer to DTC P121B or P121C .
2. Vehicle ON, engine speed between 1,375 and 1,425 RPM, normal operating temperature. Verify the scan tool MAF Sensor parameter is between 1,800 and 2,400 Hz.
3. Operate the vehicle within the conditions for running the DTC to verify the DTC does not reset. You may also operate the vehicle within the conditions that you observed from the freeze frame/failure records data.

Circuit/System Testing

1. Vehicle OFF, disconnect the harness connector at the B75B mass air flow/inlet air temperature sensor.
2. Vehicle in Service Mode, test for 4.8-5.2 V between the signal circuit terminal 5 and ground.
   If less than the specified range, test the signal circuit for a short to ground or an open/high resistance. If the circuit tests normal, replace the K20 ECM.
   If greater than the specified range, test the signal circuit for a short to voltage. If the circuit tests normal, replace the K20 ECM.
3. Verify that a test lamp illuminates between the ignition voltage circuit terminal 4 and ground.
   If the test lamp does not illuminate, test the ignition voltage circuit for a short to ground or an open/high resistance. If the circuit tests normal and the ignition voltage circuit fuse is open, test or replace the components on the ignition voltage circuit.
4. Connect the test lamp between the MAF control circuit terminal 2 and the ignition voltage circuit terminal 4.
5. Vehicle in Service Mode, command the MAF Sensor Supply Voltage Low Side Driver ON and OFF with a scan tool. The test lamp should turn ON and OFF when changing between the commanded states.
   If the test lamp is always ON, test the control circuit for a short to ground. If the circuit tests normal, replace the K20 ECM.
   If the test lamp is always OFF, test the control circuit for a short to voltage or an open/high resistance. If the circuit tests normal, replace the K20 ECM.
6. Vehicle OFF, connect the red lead of the J 38522 to the signal circuit terminal 5 at the harness connector. Connect the battery voltage supply to B+, and the black lead to ground.
7. Set the J 38522 to the following specifications.
   - Signal switch to 5 V
   - Frequency switch to 5 KHz
   - Duty Cycle switch to Normal

   Note: The engine may run rough and stall.

8. Engine running, observe the scan tool MAF Sensor Hz parameter. The parameter should be between 4,950 and 5,025 Hz.
   If not within the specified range, replace the K20 ECM.

9. If all circuits test normal, test or replace the B75B mass air flow/intake air temperature sensor.

Repair Instructions

Perform the Diagnostic Repair Verification after completing the diagnostic procedure.

- Mass Airflow Sensor with Inlet Air Temperature Sensor Replacement
- Control Module References for ECM replacement, setup, and programming

&#169© Copyright Chevrolet. All rights reserved

DTC P0106

Diagnostic Instructions

- Perform the Diagnostic System Check - Vehicle prior to using this diagnostic procedure.
- Review Strategy Based Diagnosis for an overview of the diagnostic approach.
- Diagnostic Procedure Instructions provides an overview of each diagnostic category.

DTC Descriptor

DTC P0106: Manifold Absolute Pressure (MAP) Sensor Performance

Diagnostic Fault Information

Circuit	Short to Ground	High Resistance	Open	Short to Voltage	Signal Performance
5 V Reference	P0107, P0697	P0106, P0107	P0106, P0107	P0106, P0107, P0697	P0106, P0107
MAP Sensor Signal	P0107	P0106, P0107	P0107	P0106, P0108	P0106, P0107, P1101
Low Reference	-	P0106, P0108	P0106, P0108	-	P0106, P0108

Typical Scan Tool Data

MAP Sensor

Circuit	Short to Ground	Open	Short to Voltage
Operating Conditions: Engine Running ***Parameter Normal Range:*** 2-16 psi - Varies with altitude			
5 V Reference	0 psi	0 psi	18+psi
MAP Sensor Signal	0 psi	0 psi	18+psi
Low Reference	-	18+psi	-

Circuit Description

The manifold absolute pressure (MAP) sensor measures the pressure inside the intake manifold. Pressure in the inlet manifold is affected by engine speed, throttle opening, air temperature, and barometric pressure (BARO). A diaphragm within the MAP sensor is displaced by the pressure changes that occur from the varying load and operating conditions of the engine. The sensor translates this action into electrical resistance. The MAP sensor wiring includes 3 circuits. The engine control module (ECM) supplies a regulated 5 V to the sensor on a 5 V reference circuit. The ECM supplies a ground on a low reference circuit. The MAP sensor provides a signal voltage to the ECM, relative to the pressure changes, on the MAP sensor signal circuit. The ECM converts the signal voltage input to a pressure value.

Under normal operation the highest pressure that can exist in the inlet manifold is equal to BARO. This occurs when the engine is operated at wide-open throttle (WOT) or when the vehicle is ON while the engine is OFF. Under these conditions, the ECM uses the MAP sensor to determine the current BARO. The lowest manifold pressures occur when the vehicle is idling or decelerating. MAP can range from 1.5 psi, when pressures are low, to as much as 15 psi when pressures are high, depending on the BARO. The ECM monitors the MAP sensor signal for pressure outside of the normal range.

Conditions for Running the DTC

Condition 1

- DTCP0102, P0103, P0107, P0108, P010C, P010D, P0111-P0114, P0116-P0119, P0128, P0401, P0405, P0406, P042E, P0335, or P0336 is not set.
- The IAT and ECT Sensor parameters are between -20 and +125°C (-4 and 257°F).
- Engine speed is between 500 and 8000 RPM.

Condition 2

- DTC P0107, P0108, P2227-P2230, or P2610 is not set.
- Engine not rotating.

This DTC runs continuously when either of the above conditions are met.

Conditions for Setting the DTC

The engine control module (ECM) detects that the MAP sensor pressure is not within range of the calculated pressure that is derived from the system of models for more than 0.5 s.

Action Taken When the DTC Sets

DTC P0106 is a Type B DTC.

Conditions for Clearing the MIL/DTC

DTC P0106 is a Type B DTC.

Diagnostic Aids

- A skewed or stuck engine coolant temperature (ECT) or IAT sensor will cause the calculated models to be inaccurate and may cause this DTC to run when it should not. Refer to Temperature Versus Resistance .
- The BARO that is used by the ECM to calculate the air flow models is initially based on the MAP sensor at Vehicle ON. When the engine is running, the ECM will continually update the BARO value near wide open throttle using the MAP sensor and a calculation. A skewed MAP sensor will cause the BARO value to be inaccurate. Use the scan tool and compare the BARO parameter at Vehicle ON to the Altitude vs. Barometric Pressure Table. Refer to Altitude Versus Barometric Pressure .
- A skewed MAP sensor will also cause the first and second intake manifold models to disagree with the actual MAP sensor measurements. Use the scan tool and compare the MAP Sensor parameter to a known good vehicle, under various operating conditions.

Reference Information

Schematic Reference

Engine Controls Schematics

Connector End View Reference

Component Connector End Views

Description and Operation

Hybrid Modes of Operation Description

Electrical Information Reference

- Circuit Testing
- Connector Repairs
- Testing for Intermittent Conditions and Poor Connections
- Wiring Repairs

DTC Type Reference

Powertrain Diagnostic Trouble Code (DTC) Type Definitions

Scan Tool Reference

Control Module References for scan tool information

Special Tools

J-23738-A Vacuum Pump

For equivalent regional tools, refer to Special Tools : Diagnostic Tools .

Circuit/System Verification

1. Vehicle in Service Mode, verify DTC P0697 is not set.
   If DTC P0697 is set, refer to DTC P0641, P0651, P0697, or P06A3 : ECM .
2. Determine the current vehicle testing altitude. Vehicle in Service Mode, observe the scan tool BARO Sensor parameter. Compare the parameter to the Altitude Versus Barometric Pressure table. The BARO sensor pressure parameter should be within the specified range indicated in the table.
3. Observe the scan tool MAP sensor parameter. Engine running, the MAP Sensor parameter should change.
4. Operate the vehicle within the conditions for running the DTC to verify the DTC does not reset. You may also operate the vehicle within the conditions that you observed from the freeze frame/failure records data.

Circuit/System Testing

1. Verify the integrity of the air induction system by inspecting for the following conditions:
   - Any damaged components
   - Loose or improper installation
   - Improperly routed vacuum hoses
   - Any vacuum leak
   - Any type of restriction
   - MAP sensor seal that is missing or damaged
2. Verify that restrictions do not exist in the exhaust system. Refer to Restricted Exhaust .
3. Vehicle OFF, disconnect the harness connector at the B74 MAP sensor.
4. Vehicle OFF, all systems OFF. It may take up to 2 minutes for all vehicle systems to power down. Test for less than 5 Ω between the low reference circuit terminal 2 and ground.
   If greater than the specified value, test the low reference circuit for an open/high resistance. If the circuit tests normal, replace the K20 ECM.
5. Vehicle in Service Mode, test for 4.8-5.2 V between the 5 V reference circuit terminal 1 and ground.
   If less than the specified range, test the 5 V reference circuit for a short to ground or an open/high resistance. If the circuit tests normal, replace the K20 ECM.
   If greater than the specified range, test the 5 V reference circuit for a short to voltage. If the circuit tests normal, replace the K20 ECM.
6. Verify the scan tool MAP Sensor parameter is less than 0.5 V.
   If greater than the specified range, test the signal circuit terminal 3 for a short to voltage. If the circuit tests normal, replace the K20 ECM.
7. Install a 3 A fused jumper wire between the signal circuit terminal 3 and the 5 V reference circuit terminal 1. Verify the scan tool MAP Sensor parameter is greater than 4.7 V.

If less than the specified range, test the signal circuit for a short to ground or an open/high resistance. If the circuit tests normal, replace the K20 ECM.

8. If all circuits test normal, test or replace the MAP sensor.

Component Testing

Note: You must perform the Circuit/System Testing in order to verify the integrity of the MAP sensor circuits before proceeding with the Component Testing.

Skewed Sensor Test

1. Vehicle in Service Mode, observe the MAP sensor scan tool parameter.
2. Use the observed MAP Sensor scan tool parameter that is closest to a value that is indicated in the first column of the table.
3. Connect the *J-23738-A* to the port of the B74 MAP sensor.
4. Apply 5 in Hg of vacuum to the B74 MAP sensor, with the *J-23738-A*. The MAP sensor parameter in the first column of the table should decrease by 2.5 psi. The acceptable range is indicated in the second column of the table.
5. Apply 10 in Hg of vacuum to the B74 MAP sensor using the *J-23738-A*. The MAP sensor parameter in the first column of the table should decrease by 5 psi. The acceptable range is indicated in the third column of the table.

Vehicle in Service Mode, MAP Sensor Parameter	MAP Sensor Parameter With 5 Inches of Vacuum Applied	MAP Sensor Parameter With 10 Inches of Vacuum Applied
15 psi	11.5-12.5 psi	9.0-10.0 psi
14 psi	10.5-12.0 psi	8.0-9.5 psi
13 psi	10.0-11.0 psi	7.5-9.0 psi
12 psi	8.5-10.0 psi	6.0-7.5 psi
10 psi	7.0-8.5 psi	4.5-6.0 psi
9 psi	5.5-7.0 psi	3.0-4.5 psi

Erratic Signal Test

1. Vehicle OFF, remove the B74 MAP sensor.
2. Install a 3 A fused jumper wire between the 5 V reference circuit terminal 1 and the corresponding terminal of the B74 MAP sensor.
3. Install a jumper wire between the low reference terminal 2 of the B74 MAP sensor and ground.
4. Install a jumper wire at terminal 3 of the B74 MAP sensor.
5. Connect a DMM between the jumper wire from the terminal 3 of the B74 MAP sensor and ground.
6. Vehicle in Service Mode, with the *J-23738-A*, slowly apply vacuum to the sensor while observing the voltage on the DMM. The voltage should vary between 4.9-0.2 V without any spikes or dropouts.

   If the voltage is erratic, replace the B74 MAP sensor.

Repair Instructions

Perform the Diagnostic Repair Verification after completing the diagnostic procedure.

- Manifold Absolute Pressure Sensor Replacement
- Control Module References for ECM replacement, setup, and programming

&#169© Copyright Chevrolet. All rights reserved

DTC P0107 or P0108

Diagnostic Instructions

- Perform the Diagnostic System Check - Vehicle prior to using this diagnostic procedure.
- Review Strategy Based Diagnosis for an overview of the diagnostic approach.
- Diagnostic Procedure Instructions provides an overview of each diagnostic category.

DTC Descriptors

DTC P0107: Manifold Absolute Pressure (MAP) Sensor Circuit Low Voltage

DTC P0108: Manifold Absolute Pressure (MAP) Sensor Circuit High Voltage

Diagnostic Fault Information

Circuit	Short to Ground	High Resistance	Open	Short to Voltage	Signal Performance
5 V Reference	P0107, P0697	P0106, P0107	P0106, P0107	P0106, P0107, P0697	P0106, P0107
MAP Sensor Signal	P0107	P0106, P0107	P0107	P0106, P0108	P0106, P0107, P1101
Low Reference	-	P0106, P0108	P0106, P0108	-	P0106, P0108

Typical Scan Tool Data

MAP Sensor

Circuit	Short to Ground	Open	Short to Voltage
Operating Conditions: Engine Running ***Parameter Normal Range:*** 2-16 psi - Varies with altitude			
5 V Reference	0 psi	0 psi	18+psi
MAP Sensor Signal	0 psi	0 psi	18+psi

Low Reference	-	18+psi	-

Circuit Description

The manifold absolute pressure (MAP) sensor measures the pressure inside the intake manifold. Pressure in the inlet manifold is affected by engine speed, throttle opening, air temperature, and barometric pressure (BARO). A diaphragm within the MAP sensor is displaced by the pressure changes that occur from the varying load and operating conditions of the engine. The sensor translates this action into electrical resistance. The MAP sensor wiring includes 3 circuits. The engine control module (ECM) supplies a regulated 5 V to the sensor on a 5 V reference circuit. The ECM supplies a ground on a low reference circuit. The MAP sensor provides a signal voltage to the ECM, relative to the pressure changes, on the MAP sensor signal circuit. The ECM converts the signal voltage input to a pressure value.

Under normal operation the highest pressure that can exist in the inlet manifold is equal to BARO. This occurs when the engine is operated at wide-open throttle (WOT) or when the vehicle is ON while the engine is OFF. Under these conditions, the ECM uses the MAP sensor to determine the current BARO. The lowest manifold pressures occur when the vehicle is idling or decelerating. MAP can range from 1.5 psi, when pressures are low, to as much as 15 psi when pressures are high, depending on the BARO. The ECM monitors the MAP sensor signal for pressure outside of the normal range.

Conditions for Running the DTC

These DTCs run continuously.

Conditions for Setting the DTC

P0107

The ECM detects that the MAP sensor voltage is less than 0.2 V for greater than 4 s.

P0108

The ECM detects that the MAP sensor voltage is greater than 4.5 V for greater than 4 s.

Action Taken When the DTC Sets

DTCs P0107 and P0108 are Type B DTCs.

Conditions for Clearing the MIL/DTC

DTCs P0107 and P0108 are Type B DTCs.

Reference Information

Schematic Reference

Engine Controls Schematics

Connector End View Reference

Component Connector End Views

Description and Operation

Hybrid Modes of Operation Description

Electrical Information Reference

- Circuit Testing
- Connector Repairs
- Testing for Intermittent Conditions and Poor Connections
- Wiring Repairs

DTC Type Reference

Powertrain Diagnostic Trouble Code (DTC) Type Definitions

Scan Tool Reference

Control Module References for scan tool information

Special Tools

J-23738-A Vacuum Pump

For equivalent regional tools, refer to Special Tools : Diagnostic Tools .

Circuit/System Verification

1. Vehicle in Service Mode, verify DTC P0697 is not set.
   If a DTC is set, refer to DTC P0641, P0651, P0697, or P06A3 : ECM .
2. Vehicle in Service Mode, observe the scan tool MAP sensor parameter. Engine running, the MAP Sensor parameter should change.
3. Operate the vehicle within the conditions for running the DTC to verify the DTC does not reset. You may also operate the vehicle within the conditions that you observed from the freeze frame/failure records data.

Circuit/System Testing

1. Vehicle OFF, disconnect the harness connector at the B74 MAP sensor.
2. Vehicle OFF, all systems OFF. It may take up to 2 minutes for all vehicle systems to power down. Test for less than 5 Ω between the low reference circuit terminal 2 and ground.
   If greater than the specified value, test the low reference circuit for an open/high resistance. If the circuit tests normal, replace the K20 ECM.
3. Vehicle in Service Mode, test for 4.8-5.2 V between the 5 V reference circuit terminal 1 and ground.
   If less than the specified range, test the 5 V reference circuit for a short to ground or an open/high resistance. If the circuit tests normal, replace the K20 ECM.
   If greater than the specified range, test the 5 V reference circuit for a short to voltage. If the circuit tests normal, replace the K20 ECM.
4. Verify the scan tool MAP Sensor parameter is less than 0.5 V.
   If greater than the specified range, test the signal circuit terminal 3 for a short to voltage. If the circuit tests normal, replace the K20 ECM.
5. Install a 3 A fused jumper wire between the signal circuit terminal 3 and the 5 V reference circuit terminal 1. Verify the scan tool MAP Sensor parameter is greater than 4.7 V.
   If less than the specified range, test the signal circuit for a short to ground or an open/high resistance. If the circuit tests normal, replace the K20 ECM.
6. If all circuits test normal, test or replace the B74 MAP sensor.

Component Testing

Note: You must perform the Circuit/System Testing in order to verify the integrity of the MAP sensor circuits before proceeding with the Component Testing.

Skewed Sensor Test

1. Vehicle in Service Mode, observe the MAP sensor scan tool parameter.
2. Use the observed MAP Sensor scan tool parameter that is closest to a value that is indicated in the first column of the table.
3. Connect the *J-23738-A* to the port of the B74 MAP sensor.
4. Apply 5 in Hg of vacuum to the B74 MAP sensor, with the *J-23738-A*. The MAP sensor parameter in the first column of the table should decrease by 2.5 psi. The acceptable range is indicated in the second column of the table.
5. Apply 10 in Hg of vacuum to the B74 MAP sensor using the *J-23738-A*. The MAP sensor parameter in the first column of the table should decrease by 5 psi. The acceptable range is indicated in the third column of the table.

Vehicle in Service Mode, MAP Sensor Parameter	MAP Sensor Parameter With 5 Inches of Vacuum Applied	MAP Sensor Parameter With 10 Inches of Vacuum Applied
15 psi	11.5-12.5 psi	9.0-10.0 psi
14 psi	10.5-12.0 psi	8.0-9.5 psi
13 psi	10.0-11.0 psi	7.5-9.0 psi
12 psi	8.5-10.0 psi	6.0-7.5 psi
10 psi	7.0-8.5 psi	4.5-6.0 psi
9 psi	5.5-7.0 psi	3.0-4.5 psi

Erratic Signal Test

1. Vehicle OFF, remove the B74 MAP sensor.
2. Install a 3 A fused jumper wire between the 5 V reference circuit terminal 1 and the corresponding terminal of the B74 MAP sensor.
3. Install a jumper wire between the low reference terminal 2 of the B74 MAP sensor and ground.
4. Install a jumper wire at terminal 3 of the B74 MAP sensor.
5. Connect a DMM between the jumper wire from the terminal 3 of the B74 MAP sensor and ground.
6. Vehicle in Service Mode, with the *J-23738-A*, slowly apply vacuum to the sensor while observing the voltage on the DMM. The voltage should vary between 4.9-0.2 V without any spikes or dropouts.
   If the voltage is erratic, replace the B74 MAP sensor.

Repair Instructions

Perform the Diagnostic Repair Verification after completing the diagnostic procedure.

- Manifold Absolute Pressure Sensor Replacement
- Control Module References for ECM replacement, setup, and programming

&#169© Copyright Chevrolet. All rights reserved

DTC P0111

Diagnostic Instructions

- Perform the Diagnostic System Check - Vehicle prior to using this diagnostic procedure.
- Review Strategy Based Diagnosis for an overview of the diagnostic approach.
- Diagnostic Procedure Instructions provides an overview of each diagnostic category.

DTC Descriptor

DTC P0111: Intake Air Temperature (IAT) Sensor Performance

Diagnostic Fault Information

IAT Sensor

Circuit	Short to Ground	Open/High Resistance	Short to Voltage	Signal Performance
IAT Sensor Signal	P0112, P0114	P0111, P0113, P0114	P0113*, P0114	P0111
Low Reference	-	P0111, P0113, P0114	P0113*, P0114	P0111
*Internal ECM or sensor damage may occur if the circuit is shorted to B+.				

Typical Scan Tool Data

IAT Sensor

Circuit	Short to Ground	Open or High Resistance	Short to Voltage
Operating Conditions: Engine Running ***Parameter Normal Range:*** Varies with ambient temperature			
IAT Sensor Signal	150°C (302°F)	-40°C (-40°F)	-40°C (-40°F)*
Low Reference	-	-40°C (-40°F)	-40°C (-40°F)*

*Internal ECM or sensor damage may occur if the circuit is shorted to B+

Typical Scan Tool Data

ECT Sensor

Circuit	Short to Ground	Open or High Resistance	Short to Voltage
Operating Conditions: Engine Running ***Parameter Normal Range:*** Varies with coolant temperature			
ECT Sensor Signal	150°C (302°F)	-40°C (-40°F)	-40°C (-40°F)*
Low Reference	-	-40°C (-40°F)	-40°C (-40°F)*
*Internal ECM or sensor damage may occur if the circuit is shorted to B+			

Circuit/System Description

The intake air temperature (IAT) sensor is integrated with the mass air flow (MAF) sensor. It is a variable resistor that measures the temperature of the air entering the engine. The IAT sensor has a signal circuit and a low reference circuit. The engine control module (ECM) supplies 5 volts to the IAT signal circuit and a ground for the IAT low reference circuit.

IAT	IAT Resistance	IAT Signal Voltage
Cold	High	High
Warm	Low	Low

Conditions for Running the DTC

- DTCs P0112, P0113, P0117, P0118 are not set.
- The vehicle has been OFF at least 8 hours.
- Vehicle in Service Mode.
- The ECT start-up signal is colder than 60°C (140°F).
- This DTC runs once per ignition cycle when the enabling conditions are met.

Conditions for Setting the DTC

The ECM determines the absolute difference between IAT start-up temperature and the ECT start-up temperature is greater than 40°C (72°F).

Action Taken When the DTC Sets

DTC P0111 is a Type B DTC.

Conditions for Clearing the DTC

DTC P0111 is a Type B DTC.

Diagnostic Aids

- An IAT sensor that is skewed, due to more resistance than is normal, can widen the spread between the 2 sensors and cause this DTC to set. Measure and record the resistance of the IAT sensor at various ambient temperatures, and then compare those measurements to the Temperature vs. Resistance Table. Refer to Temperature Versus Resistance .
- A slight to moderate resistance in the IAT sensor signal circuit or low reference circuit will increase the range between these two sensors. This condition results in a greater voltage on the IAT sensor signal circuit, which is interpreted by the ECM as a colder IAT.
- Inspect the mass air flow/inlet air temperature sensor terminals for corrosion.

Reference Information

Schematic Reference

Engine Controls Schematics

Connector End View Reference

Component Connector End Views

Description and Operation

Hybrid Modes of Operation Description

Electrical Information Reference

- Circuit Testing
- Connector Repairs
- Testing for Intermittent Conditions and Poor Connections
- Wiring Repairs

DTC Type Reference

Powertrain Diagnostic Trouble Code (DTC) Type Definitions

Scan Tool Reference

Control Module References for scan tool information

Circuit/System Verification

Note: Perform Step 1 of this verification procedure only if the vehicle has been OFF for 8 hours or more.

1. Vehicle in Service Mode, observe the following scan tool parameters. The readings should be within 40°C (72°F) of each other.
   - Start-Up IAT
   - Start-Up ECT
2. Engine running, observe the scan tool IAT sensor parameter. The reading should be between -38 and +149°C (-36 and +300°F), depending on the current ambient temperature and the vehicle operating conditions.
3. Operate the vehicle within the conditions for running the DTC to verify that the DTC does not reset. You may also operate the vehicle within the conditions that you observed from the freeze frame/failure records data.

Circuit/System Testing

1. Vehicle OFF, disconnect the harness connector at the B75B mass air flow/inlet air temperature sensor.
2. Vehicle OFF, all systems OFF. It may take up to 2 minutes for all vehicle systems to power down. Test for less than 5 Ω between the low reference circuit terminal 1 and ground.
   If greater than the specified range, test the low reference circuit for an open/high resistance. If the circuit tests normal, replace the K20 ECM.
3. Vehicle in Service Mode, verify the scan tool IAT Sensor parameter is colder than -39°C (-38°F).
   If warmer than the specified range, test the signal circuit for a short to ground. If the circuit tests normal, replace the K20 ECM.

   Note: If the fuse in the jumper wire opens, the signal circuit is shorted to a voltage and the ECM or the sensor may be damaged.

4. Install a 3 A fused jumper wire between the signal circuit terminal 3 and ground. Verify the scan tool IAT Sensor parameter is warmer than 149°C (300°F).
   If colder than the specified range, test the signal circuit for a short to voltage or an open/high resistance. If the circuit tests normal, replace the K20 ECM.
5. If all circuits test normal, test or replace the B75B mass air flow/intake air temperature sensor.

Component Testing

1. Vehicle OFF, disconnect the harness connector at the B75B mass air flow/inlet air temperature sensor.

   Note: A thermometer can be used to test the sensor off the vehicle.

2. Test the IAT sensor by varying the sensor temperature while monitoring the sensor resistance. Compare the readings with the Temperature Versus Resistance . The resistance values should be in range of the table values.

If not within the specified range, replace the B75B mass air flow/inlet air temperature sensor.

Repair Instructions

Perform the Diagnostic Repair Verification after completing the diagnostic procedure.

- Mass Airflow Sensor with Inlet Air Temperature Sensor Replacement
- Control Module References for ECM replacement, setup, and programming

&#169© Copyright Chevrolet. All rights reserved

DTC P0112, P0113, or P0114

Diagnostic Instructions

- Perform the Diagnostic System Check - Vehicle prior to using this diagnostic procedure.
- Review Strategy Based Diagnosis for an overview of the diagnostic approach.
- Diagnostic Procedure Instructions provides an overview of each diagnostic category.

DTC Descriptors

DTC P0112: Inlet Air Temperature (IAT) Sensor Circuit Low Voltage

DTC P0113: Inlet Air Temperature (IAT) Sensor Circuit High Voltage

DTC P0114: Inlet Air Temperature (IAT) Sensor Circuit Intermittent

Diagnostic Fault Information

IAT Sensor

Circuit	Short to Ground	Open/High Resistance	Short to Voltage	Signal Performance
IAT Sensor Signal	P0112, P0114	P0111, P0113, P0114	P0113*, P0114	P0111
Low Reference	-	P0111, P0113, P0114	P0113*, P0114	P0111
*Internal ECM or sensor damage may occur if the circuit is shorted to B+.				

Typical Scan Tool Data

IAT Sensor

Circuit	Short to Ground	Open or High Resistance	Short to Voltage
Operating Conditions: Engine Running			

Parameter Normal Range: Varies with ambient temperature			
IAT Sensor Signal	150°C (302°F)	-40°C (-40°F)	-40°C (-40°F)*
Low Reference	-	-40°C (-40°F)	-40°C (-40°F)*
*Internal ECM or sensor damage may occur if the circuit is shorted to B+			

Circuit/System Description

The intake air temperature (IAT) sensor is integrated with the mass air flow (MAF) sensor. It is a variable resistor that measures the temperature of the air entering the engine. The IAT sensor has a signal circuit and a low reference circuit. The engine control module (ECM) supplies 5 volts to the IAT signal circuit and a ground for the IAT low reference circuit.

IAT	IAT Resistance	IAT Signal Voltage
Cold	High	High
Warm	Low	Low

Conditions for Running the DTCs

P0112 or P0113

- The engine is running.
- These DTCs run continuously when the above condition is met.

P0114

- Service Mode is active.
  OR
- The engine is running.
- This DTC runs continuously when the above condition is met.

Conditions for Setting the DTCs

P0112

The ECM detects that the IAT sensor signal is warmer than 149°C (300°F) for greater than 5 s.

P0113

Note: The scan tool display range is between -40 and + 150°C (-40 and +302°F).

The ECM detects that the IAT sensor signal is colder than -59°C (-72°F) for greater than 5 s.

P0114

The ECM detects that the IAT sensor signal is intermittent or has abruptly changed greater than 125°C (257°F) warmer or colder for greater than 5 s.

Action Taken When the DTCs Set

DTCs P0112, P0113 and P0114 are Type B DTCs.

Conditions for Clearing the MIL/DTC

DTCs P0112, P0113 and P0114 are Type B DTCs.

Diagnostic Aids

- An IAT sensor signal circuit or low reference circuit that is shorted to the MAF sensor signal circuit can cause a DTC P0113 to set. This condition causes a rapid fluctuation in the IAT Sensor parameter.
- An IAT sensor signal circuit that is shorted to the MAF sensor ignition circuit can cause a DTC P0113 and/or a DTC P0114 to set.

Reference Information

Schematic Reference

Engine Controls Schematics

Connector End View Reference

Component Connector End Views

Description and Operation

Hybrid Modes of Operation Description

Electrical Information Reference

- Circuit Testing

- Connector Repairs
- Testing for Intermittent Conditions and Poor Connections
- Wiring Repairs

DTC Type Reference

Powertrain Diagnostic Trouble Code (DTC) Type Definitions

Scan Tool Reference

Control Module References for scan tool information

Circuit/System Verification

1. Engine running, observe the scan tool IAT sensor parameter. The reading should be between -38 and +149°C (-36 and +300°F).
2. Operate the vehicle within the conditions for running the DTC to verify that the DTC does not reset. You may also operate the vehicle within the conditions that you observed from the freeze frame/failure Records data.

Circuit/System Testing

1. Vehicle OFF, disconnect the harness connector at the B75B mass air flow/inlet air temperature sensor.
2. Vehicle OFF, all systems OFF. It may take up to 2 minutes for all vehicle systems to power down. Test for less than 5 Ω between the low reference circuit terminal 1 and ground.
   If greater than the specified range, test the low reference circuit for an open/high resistance. If the circuit tests normal, replace the K20 ECM.
3. Vehicle in Service Mode, verify the scan tool IAT Sensor parameter is colder than -39°C (-38°F).
   If warmer than the specified range, test the signal circuit terminal 3 for a short to ground. If the circuit tests normal, replace the K20 ECM.

   Note: If the fuse in the jumper wire opens, the signal circuit is shorted to a voltage and the ECM or the sensor may be damaged.

4. Install a 3 A fused jumper wire between the signal circuit terminal 3 and ground. Verify the scan tool IAT Sensor parameter is warmer than 149°C (300°F).
   If colder than the specified range, test the signal circuit for a short to voltage or an open/high resistance. If the circuit tests normal, replace the K20 ECM.
5. If all circuits test normal, test or replace the B75B mass air flow/intake air temperature sensor.

Component Testing

1. Vehicle OFF, disconnect the harness connector at the B75B mass air flow/inlet air temperature sensor.

   Note: A thermometer can be used to test the sensor off the vehicle.

2. Test the IAT sensor by varying the sensor temperature while monitoring the sensor resistance. Compare the readings with the Temperature Versus Resistance . The

resistance values should be in range of the table values.

If not within the specified range, B75B mass air flow/inlet air temperature sensor.

Repair Instructions

Perform the Diagnostic Repair Verification after completing the diagnostic procedure.

- Mass Airflow Sensor with Inlet Air Temperature Sensor Replacement
- Control Module References for ECM replacement, setup, and programming

&#169© Copyright Chevrolet. All rights reserved

DTC P0116

Diagnostic Instructions

- Perform the Diagnostic System Check - Vehicle prior to using this diagnostic procedure.
- Review Strategy Based Diagnosis for an overview of the diagnostic approach.
- Diagnostic Procedure Instructions provides an overview of each diagnostic category.

DTC Descriptor

DTC P0116: Engine Coolant Temperature (ECT) Sensor Performance

Diagnostic Fault Information

Circuit	Short to Ground	Open/High Resistance	Short to Voltage	Signal Performance
Signal Circuit	P0117, P0119	P0118	P0118*	P0116, P0119, P0128
Low Reference	-	P0118, P0119	-	P0119, P0128
*ECM or sensor damage may occur if the circuit is shorted to B+.				

Typical Scan Tool Data

ECT Sensor

Circuit	Short to Ground	Open	Short to Voltage
Operating Conditions: Engine Running in closed loop ***Parameter Normal Range:*** Varies with coolant temperature			
Signal	140°C (284°F)	-40°C (-40°F)	-40°C (-40°F)
Low Reference	-	-40°C (-40°F)	-40°C (-40°F)

Circuit/System Description

The engine coolant temperature (ECT) sensor is a variable resistor that measures the temperature of the engine coolant. The engine control module (ECM) supplies 5 V to the ECT sensor signal circuit and a ground for the low reference circuit.

The purpose of this diagnostic is to determine if the input from the ECT sensor is skewed warmer than normal. The internal clock of the ECM will record the amount of time the engine is OFF. If the required engine OFF time is met at start-up, the ECM will compare the temperature difference between the actual measured ECT and IAT sensors.

Conditions for Running the DTC

- DTCs P0111, P0112, P0113, P0114, P0117, P0118, and P2610 are not set.
- The vehicle and the propulsion system has been off for greater than 8 hours before the engine is started.
- The engine is running.
- The inlet air temperature (IAT) is warmer than -7°C (19°F).
- This DTC runs once per ignition cycle when the above conditions are met.

Conditions for Setting the DTC

The ECM detects the difference of the temperature of the ECT and IAT sensors is greater than 20°C (68F).

Action Taken When the DTC Sets

DTC P0116 is a Type B DTC.

Conditions for Clearing the DTC

DTC P0116 is a Type B DTC.

Diagnostic Aids

- Inspect the ECT sensor terminals for corrosion.
- An intake air temperature (IAT) sensor that is biased colder at various ambient temperatures due to greater resistance than is normal will increase the range between these 2 sensors. Measure and record the resistance of the IAT sensor at various ambient temperatures, then compare those measurements to the Temperature vs. Resistance table. Refer to Temperature Versus Resistance .
- A slight to moderate resistance in the IAT sensor signal circuit or low reference circuit will increase the range between these two sensors. This condition results in a greater voltage on the IAT sensor signal circuit, which is interpreted by the ECM as a colder IAT.
- If the condition is intermittent, allow the vehicle to sit for greater then 8 hours with the Vehicle OFF and the propulsion system inactive, may help isolate the condition. Compare the scan tool Radiator Coolant Temperature Sensor and ECT Sensor temperature sensor values at vehicle ON. The Radiator Coolant Temperature Sensor and the ECT Sensor parameters should display within 3°C (5°F).

Reference Information

Schematic Reference

Engine Controls Schematics

Connector End View Reference

Component Connector End Views

Description and Operation

Hybrid Modes of Operation Description

Electrical Information Reference

- Circuit Testing
- Connector Repairs
- Testing for Intermittent Conditions and Poor Connections
- Wiring Repairs

DTC Type Reference

Powertrain Diagnostic Trouble Code (DTC) Type Definitions

Scan Tool Reference

Control Module References for scan tool information

Circuit/System Verification

1. Vehicle in Service Mode, observe the DTC information with a scan tool. Verify that DTC P0111, P0112, P0113, P0114, P0117, or P0118 are not set.
   If any of the DTCs are set, refer to Diagnostic Trouble Code (DTC) List - Vehicle .
2. Vehicle OFF, inspect the cooling system surge tank for the proper coolant level. Refer to Loss of Coolant and Cooling System Draining and Filling .
3. Engine ticking over for 15 minutes with the A/C OFF.

   Note: Depending on ambient temperature, it may take up to 4 minutes for the temperatures to equalise.

4. Command the engine coolant thermostat heater to 100 percent with a scan tool. Increase the engine speed to wide open throttle. Observe the scan tool RCT and the ECT sensor parameters. The RCT and the ECT sensor parameters should be within 20°C (68°F).

5. Operate the vehicle within the conditions for running the DTC to verify the DTC does not reset. You may also operate the vehicle within the conditions that you observed from the freeze frame/failure records data.

Circuit/System Testing

1. Vehicle OFF, disconnect the harness connector at the B34 engine coolant temperature sensor.
2. Vehicle OFF, all systems OFF. It may take may take up to 2 minutes for all vehicle systems to power down. Test for less than 5 Ω between the low reference circuit terminal 2 and ground.
   If greater than the specified range, test the low reference circuit for an open/high resistance. If the circuit tests normal, replace the K20 engine control module.
3. Vehicle in Service Mode, verify the scan tool ECT sensor parameter is colder than -39°C (-38°F).
   If warmer than the specified range, test the signal circuit terminal 1 for a short to ground. If the circuit tests normal, replace the K20 engine control module.

   Note: If the fuse in the jumper wire opens, the signal circuit is shorted to a voltage and the sensor may be damaged.

4. Install a 3 A fused jumper wire between the signal circuit terminal 1 and the low reference circuit terminal 2. Verify the scan tool ECT Sensor parameter is warmer than 140°C (284°F).
   If less than the specified range, test the signal circuit for a short to voltage or an open/high resistance. If the circuit tests normal, replace the K20 engine control module.
5. If all circuits test normal, test or replace the B34 engine coolant temperature sensor.

Component Testing

Static Test

1. Vehicle OFF, remove the B34 engine coolant temperature sensor.

   Note: A thermometer can be used to test the sensor off the vehicle.

2. Test the B34 engine coolant temperature sensor by varying the sensor temperature while monitoring the sensor resistance. Compare the readings with the Temperature Versus Resistance table and verify that the resistance is within 5% of the specification.
   If not within the specified range, replace the B34 engine coolant temperature sensor.

Repair Instructions

Perform the Diagnostic Repair Verification after completing the diagnostic procedure.

- Engine Coolant Temperature Sensor Replacement : Thermostat → Water Outlet
- Control Module References for ECM replacement, setup, and programming

&#169© Copyright Chevrolet. All rights reserved

DTC P0117, P0118, or P0119

Diagnostic Instructions

- Perform the Diagnostic System Check - Vehicle prior to using this diagnostic procedure.
- Review Strategy Based Diagnosis for an overview of the diagnostic approach.
- Diagnostic Procedure Instructions provides an overview of each diagnostic category.

DTC Descriptors

DTC P0117: Engine Coolant Temperature (ECT) Sensor Circuit Low Voltage

DTC P0118: Engine Coolant Temperature (ECT) Sensor Circuit High Voltage

DTC P0119: Engine Coolant Temperature (ECT) Sensor Circuit Intermittent

Diagnostic Fault Information

Circuit	Short to Ground	Open/High Resistance	Short to Voltage	Signal Performance
Signal Circuit	P0117, P0119	P0118	P0118*	P0116, P0119, P0128
Low Reference	-	P0118, P0119	-	P0119, P0128
*ECM or sensor damage may occur if the circuit is shorted to B+.				

Typical Scan Tool Data

ECT Sensor

Circuit	Short to Ground	Open	Short to Voltage
Operating Conditions: Engine Running ***Parameter Normal Range:*** Varies with coolant temperature			

ECT Sensor Signal	140°C (284°F)	-40°C (-40°F)	-40°C (-40°F)
Low Reference	-	-40°C (-40°F)	-40°C (-40°F)

Circuit/System Description

The engine coolant temperature (ECT) sensor is a variable resistor that measures the temperature of the engine coolant. The engine control module (ECM) supplies 5 V to the ECT sensor signal circuit and a ground for the low reference circuit. This diagnostic checks for an open, short to ground or an intermitten circuit condition between the ECM and ECT sensor.

Conditions for Running the DTC

P0117

- Vehicle ON, or the engine is running.
- This DTC runs continuously when the above conditions are met.

P0118

- The engine run time is greater than 10 s.
- The inlet air temperature (IAT) sensor is greater than 0°C (32°F).
- This DTC runs continuously when the above conditions are met.

P0119

- DTC P0117 or P0118 are not set.
- Vehicle ON, or the engine is running.
- This DTC runs continuously when the above conditions are met.

Conditions for Setting the DTC

P0117

The ECM detects that the ECT sensor signal is warmer than 149°C (300°F) for greater than 5 s.

P0118

Note: The scan tool display range is between -40°C to +150°C (-40°F to +302°F).

The ECM detects that the ECT sensor signal is colder than -59°C (-74°F) for greater than 5 s.

P0119

The ECM detects that the ECT sensor signal has abruptly changed by a minimum of 5°C (9°F), warmer or colder for greater than 3 s.

Action Taken When the DTC Sets

- DTCs P0117, P0118 and P0119 are Type B DTCs
- The cooling fans will be commanded ON.
- The engine is forced ON and Autostop is disabled.

Conditions for Clearing the DTC

DTCs P0117, P0118 and P0119 are Type B DTCs

Reference Information

Schematic Reference

Engine Controls Schematics

Connector End View Reference

Component Connector End Views

Description and Operation

Cooling System Description and Operation

Hybrid Modes of Operation Description

Electrical Information Reference

- Circuit Testing
- Connector Repairs
- Testing for Intermittent Conditions and Poor Connections
- Wiring Repairs

DTC Type Reference

Powertrain Diagnostic Trouble Code (DTC) Type Definitions

Scan Tool Reference

Control Module References for scan tool information

Circuit/System Verification

1. Engine running, observe the scan tool ECT Sensor parameter. The reading should be between -39 to +139°C (-38 to +282°F).
2. Engine running, observe the scan tool ECT Sensor parameter while moving the related wiring harness and harness connectors. The reading should not change abruptly.
   If the reading changes abruptly, repair the wiring harness or the harness connectors.
3. Operate the vehicle within the Conditions for Running the DTC to verify the DTC does not reset. You may also operate the vehicle within the conditions that you observed from the Freeze Frame/Failure Records data.

Circuit/System Testing

1. Vehicle OFF, disconnect the harness connector at the B34 engine coolant temperature sensor.
2. Vehicle OFF, all systems OFF. This may take up to 2 minutes for all vehicle systems to power down. Test for less than 5 Ω between the low reference circuit terminal 1 and ground.
   If greater than the specified range, test the low reference circuit for an open/high resistance. If the circuit tests normal, replace the K20 engine control module.
3. Vehicle in Service Mode, verify the scan tool ECT Sensor is colder than -39°C (-38.2°F).
   If warmer than the specified range, test the signal circuit terminal 2 for a short to ground. If the circuit tests normal, replace the K20 engine control module.
4. Install a 3 A fused jumper wire between the signal circuit terminal 2 and the low reference circuit terminal 2. Verify the scan tool ECT Sensor is warmer than 140°C (284°F).
   If colder than the specified range, test the signal circuit for a short to voltage or an open/high resistance. If the circuit tests normal, replace the K20 engine control module.
5. If all circuits test normal, test or replace the B34 engine coolant temperature sensor.

Component Testing

Static Test

1. Vehicle OFF, remove the B34 engine coolant temperature sensor.

   Note: A thermometer can be used to test the sensor off the vehicle.

2. Test the B34 engine coolant temperature sensor by varying the sensor temperature while monitoring the sensor resistance. Compare the readings with the Temperature Versus Resistance table and verify that the resistance is within 5% of the specification.

If not within the specified range, replace the B34 engine coolant temperature sensor.

Repair Instructions

Perform the Diagnostic Repair Verification after completing the diagnostic procedure.

- Engine Coolant Temperature Sensor Replacement : Thermostat → Water Outlet
- Control Module References for ECM replacement, setup, and programming

&#169© Copyright Chevrolet. All rights reserved

DTC P0121-P0123, P0222, P0223, or P2135

Diagnostic Instructions

- Perform the Diagnostic System Check - Vehicle prior to using this diagnostic procedure.
- Review Strategy Based Diagnosis for an overview of the diagnostic approach.
- Diagnostic Procedure Instructions provides an overview of each diagnostic category.

DTC Descriptors

DTC P0121: Throttle Position Sensor 1 Performance

DTC P0122: Throttle Position Sensor 1 Circuit Low Voltage

DTC P0123: Throttle Position Sensor 1 Circuit High Voltage

DTC P0222: Throttle Position Sensor 2 Circuit Low Voltage

DTC P0223: Throttle Position Sensor 2 Circuit High Voltage

DTC P2135: Throttle Position Sensors 1-2 Not Plausible

Diagnostic Fault Information

Circuit	Short to Ground	High Resistance	Open	Short to Voltage	Signal Performance
5 V Reference	P06A3	-	P0122, P0222,	P06A3	P0121
TP Sensor 1 Signal	P0122	P2119, P2135, P2176	P0122	P0123, P2135	P0121, P2135
TP Sensor 2 Signal	P0222	P2135	P0223	P0223, P2135	P0121, P2135
Low Reference	-	-	P0122, P0223	-	-

Typical Scan Tool Data

Throttle Position Sensor 1

Circuit	Short to Ground	Open	Short to Voltage
Operating Conditions: Engine running ***Parameter Normal Range:*** TP Sensor 1 3.0-4.0 V			
5 V Reference	0.00 V	0.00 V	4-5 V
TP Sensor 1 Signal	0.00 V	0.00 V	5.00 V
Low Reference	-	4-5 V	-

Throttle Position Sensor 2

Circuit	Short to Ground	Open	Short to Voltage
Operating Conditions: Engine running ***Parameter Normal Range:*** TP Sensor 2 1.4-2.4 V			
5 V Reference	0-0.5 V	0-0.5 V	3-5 V
TP Sensor 2 Signal	0.00 V	5.00 V	5.00 V
Low Reference	-	4-5 V	-

Circuit/System Description

The throttle body assembly contains 2 throttle position (TP) sensors. The TP sensors are mounted to the throttle body assembly and are not serviceable. The TP sensors provide a signal voltage that changes relative to throttle blade angle. The engine control module (ECM) supplies the TP sensors with a common 5 V reference circuit, a common low reference circuit, and 2 independent signal circuits.

The TP sensors have opposite functionality. TP sensor 1 signal voltage decreases and TP sensor 2 signal voltage increases.

Conditions for Running the DTC

P0121

- DTCs P0102, P0103, P0107, P0108, P0111, P0112, P0113, P0114, P0116, P0117, P0118, P0119, P0128, P0335, or P0336 is not set.
- The engine speed is between 500-8,000 RPM.
- The engine coolant temperature (ECT) is between -7 to +125°C (19-257°F).
- The inlet air temperature (IAT) is between -20 to +125°C (-4 to +257°F).
- The DTC runs continuously when the above conditions are met.

P0122, P0123, P0222, P0223

- DTC P06A3 is not set.
- The run/crank voltage is greater than 6.4 V.
- The ignition is ON.
- The DTCs runs continuously when the above conditions are met.

P2135

- DTCs P0122, P0123, P0222, P0223, and P06A3 is not set.
- The run/crank voltage is greater than 6.4 V.
- The ignition is ON.
- The DTC runs continuously when the above conditions are met.

Conditions for Setting the DTC

P0121

The ECM detects that the TP sensor 1 voltage is stuck in range for greater than 1 s.

P0122

The ECM detects that the TP sensor 1 voltage is less than 0.32 V for greater than 1 s.

P0123

The ECM detects that the TP sensor 1 voltage is greater than 4.7 V for greater than 1 s.

P0222

The ECM detects that the TP sensor 2 voltage is less than 0.25 V for greater than 1 s.

P0223

The ECM detects that the TP sensor 2 voltage is greater than 4.6 V for greater than 1 s.

P2135

The ECM detects that TP sensor 1 and TP sensor 2 disagree greater than 7-10 percent for greater than 1 s.

Action Taken When the DTC Sets

P0121

- DTC P0121 is a Type B DTC.
- A message centre displays Propulsion Power is Reduced.
- Under certain conditions, the ECM commands the engine OFF.

P0122, P0123, P0222, P0223, or P2135

- DTC P0122, P0123, P0222, P0223, and P2135 are Type A DTCs.
- A message centre displays Propulsion Power is Reduced.
- Under certain conditions, the ECM commands the engine OFF.

Conditions for Clearing the DTC

- DTC P0121 is a Type B DTC.
- DTC P0122, P0123, P0222, P0223, and P2135 are Type A DTCs.

Diagnostic Aids

A high resistance condition on the throttle position and throttle actuator control circuits could cause a DTC to set.

Reference Information

Schematic Reference

Engine Controls Schematics

Connector End View Reference

Component Connector End Views

Description and Operation

Hybrid Modes of Operation Description

Throttle Actuator Control (TAC) System Description

Electrical Information Reference

- Circuit Testing
- Connector Repairs
- Testing for Intermittent Conditions and Poor Connections
- Wiring Repairs

DTC Type Reference

Powertrain Diagnostic Trouble Code (DTC) Type Definitions

Scan Tool Reference

Control Module References for scan tool information

Circuit/System Verification

1. Vehicle in Service Mode.
2. Verify DTC P06A3 is not set.
   If any of the DTCs are set
   Refer to DTC P0641, P0651, P0697, or P06A3 : ECM for further diagnosis.
   If none of the DTCs are set
3. Verify the scan tool Throttle Body Idle Air Flow Compensation parameter is less than 90 %.
   90 % or greater
   Refer to Throttle Body Inspection and Cleaning
   If less than 90 %
4. Verify the scan tool Throttle Position Sensor 1 and Throttle Position Sensor 2 voltage parameters are between 1.0-4.0 V.
   If not between 1.0-4.0 V
   Refer to Circuit/System Testing
   If between 1.0-4.0 V
5. Verify the Throttle Position Sensors 1 and 2 Agree/Disagree parameter displays Agree while performing the Throttle Sweep Test with a scan tool.
   If Disagree
   Test or replace the Q38 throttle body assembly.
   If Agree
6. Verify DTC P0121, P0122, P0123, P0222, P0223, and P2135 is not set.
   If any of the DTCs are set

Refer to Circuit/System Testing

If none of the DTCs are set

7. Operate the vehicle within the Conditions for Running the DTC. You may also operate the vehicle within the conditions that you observed from the Freeze Frame/Failure Records data.
8. Verify a DTC does not set.

   If any DTC sets

   Refer to Diagnostic Trouble Code (DTC) List - Vehicle for further diagnosis.

   If no DTCs set
9. All OK

Circuit/System Testing

Note: Disconnecting the throttle body harness connector causes additional DTCs to set.

1. Vehicle OFF, and all vehicle systems OFF, disconnect the harness connector at Q38 throttle body assembly. It may take up to 2 minutes for all vehicle systems to power down.
2. Test for less than 5 Ω between the low reference circuit terminal C and ground.

   If 5 Ω or greater

   2.1. Vehicle OFF, disconnect the harness connector at the K20 engine control module.

   2.2. Test for less than 2 Ω in the low reference circuit end to end.

   If 2 Ω or greater, repair the open/high resistance in the circuit.

   If less than 2 Ω, replace the K20 engine control module.

   If less than 5 Ω
3. Vehicle in Service Mode.
4. Test for 4.8-5.2 V between the 5 V reference circuit terminal E and ground.

   If less than 4.8 V

   4.1. Vehicle OFF, disconnect the harness connector at the K20 engine control module.

   4.2. Test for infinite resistance between the 5 V reference circuit and ground.

   If less than infinite resistance, repair the short to ground on the circuit.

   If infinite resistance

   4.3. Test for less than 2 Ω in the 5 V reference circuit end to end.

   If 2 Ω or greater, repair the open/high resistance in the circuit.

   If less than 2 Ω, replace the K20 engine control module.

   If greater than 5.2 V

   4.1. Vehicle OFF, disconnect the harness connector at the K20 engine control module, vehicle in Service Mode.

   4.2. Test for less than 1 V between the 5 V reference circuit and ground.

   If 1 V or greater, repair the short to voltage on the circuit.

   If less than 1 V, replace the K20 engine control module.

If between 4.8-5.2 V

5. Vehicle in Service Mode.
6. Test for less than 1 V between the throttle position sensor 1 signal circuit terminal D and ground.

   If 1 V or greater

   6.1. Vehicle OFF, disconnect the harness connector at the K20 engine control module, vehicle in Service Mode.
   6.2. Test for less than 1 V between the signal circuit terminal D and ground.
   If 1 V or greater, repair the short to voltage on the circuit.
   If less than 1 V, replace the K20 engine control module.

   If less than 1 V

7. Install a 3 A fused jumper wire between throttle position sensor 1 signal circuit terminal D and the 5 V reference circuit terminal E.
8. Verify the scan tool Throttle Position Sensor 1 voltage parameter is greater than 4.8 V.

   If less than 4.8 V

   8.1. Vehicle OFF, disconnect the harness connector at the K20 engine control module.
   8.2. Test for infinite resistance between the signal circuit terminal and ground.
   If less than infinite resistance, repair the short to ground on the circuit.
   If infinite resistance
   8.3. Test for less than 2 Ω in the signal circuit end to end.
   If 2 Ω or greater, repair the open/high resistance in the circuit.
   If less than 2 Ω, replace the K20 engine control module.

   If greater than 4.8 V

9. Test for 4.8-5.2 V between the throttle position sensor 2 signal circuit terminal F and ground.

   If less than 4.8 V

   9.1. Vehicle OFF, disconnect the harness connector at the K20 engine control module.
   9.2. Test for infinite resistance between the signal circuit and ground.
   If less than infinite resistance, repair the short to ground on the circuit.
   If infinite resistance
   9.3. Test for less than 2 Ω in the 5 V reference circuit end to end.
   If 2 Ω or greater, repair the open/high resistance in the circuit.
   If less than 2 Ω, replace the K20 engine control module.

   If greater than 5.2 V

   9.1. Vehicle OFF, disconnect the harness connector at the K20 engine control module, vehicle in Service Mode.
   9.2. Test for less than 1 V between the signal circuit and ground.
   If 1 V or greater, repair the short to voltage on the circuit.
   If less than 1 V, replace the K20 engine control module.

   If between 4.8-5.2 V

10. Test or replace the Q38 throttle body assembly.

Repair Instructions

- Throttle Body Assembly Replacement
- Control Module References for ECM replacement, programming and setup

Repair Verification

1. Install any components that have been removed or replaced during diagnosis.
2. Perform any adjustments, programming or setup procedures that are required when a component is removed or replaced.
3. Clear the DTCs with a scan tool.
4. Vehicle OFF and all vehicle systems OFF. It may take up to 2 minutes for all vehicle systems to power down.
5. Vehicle in Service Mode.
6. Verify the Throttle Position Sensors 1 and 2 Agree/Disagree parameter displays Agree while performing the Throttle Sweep Test with a scan tool.
   If Disagree
   Test or replace the Q38 throttle body assembly.
   If Agree
7. If the repair was related to a DTC, duplicate the Conditions for Running the DTC and use the Freeze Frame/Failure Records, if applicable, in order to verify the DTC does not reset.
   If any DTC sets
   Refer to Diagnostic Trouble Code (DTC) List - Vehicle for further diagnosis.
   If no DTC sets
8. All OK

&#169© Copyright Chevrolet. All rights reserved

DTC P0128

Diagnostic Instructions

- Perform the Diagnostic System Check - Vehicle prior to using this diagnostic procedure.
- Review Strategy Based Diagnosis for an overview of the diagnostic approach.
- Diagnostic Procedure Instructions provides an overview of each diagnostic category.

DTC Descriptor

DTC P0128: Engine Coolant Temperature (ECT) Below Thermostat Regulating Temperature

Diagnostic Fault Information

Circuit	Short to Ground	Open/High Resistance	Short to Voltage	Signal Performance
ECT Sensor Signal	P0117, P0119	P0118	P0118*	P0116, P0119, P0128
Low Reference	-	P0118, P0119	-	P0119, P0128
*ECM or sensor damage may occur if the circuit is shorted to B+				

Typical Scan Tool Data

ECT Sensor

Circuit	Short to Ground	Open	Short to Voltage
Operating Conditions: Engine Running in closed loop ***Parameter Normal Range:*** Varies with coolant temperature			
ECT Sensor Signal	150°C (302°F)	-40°C (-40°F)	-40°C (-40°F)
Low Reference	-	-40°C (-40°F)	-40°C (-40°F)

Circuit/System Description

The engine control module (ECM) monitors the temperature of the engine coolant for engine control and as enabling criteria for some diagnostics.The ECM monitors the amount of time to reach a predetermined temperature based on the Start up ECT sensor. The ECM uses this temperature to determine if the engine has warmed up to the thermostat regulating temperature. If the engine coolant temperature does not increase normally or does not reach the thermostat regulating temperature, diagnostics that use the ECT as enabling criteria, may not run when expected. If the engine coolant temperature fails to reach the thermostat regulating temperature, before a predetermined amount of time, the DTC sets.

Conditions for Running the DTC

- DTCs P0101, P0102, P0103, P0111, P0112, P0113, P0114, P0116, P0117, P0118, P00B3, P00B4, P00B6 or P010C are not set.
- The start-up ECT sensor is between -10 to +59°C (14 to +138°F).
- The calculated airflow into the engine is greater than 1 g/s.
- The engine OFF time is greater than 30 min.
- The thermostat commanded duty cycle is less than 50%.
- The DTC runs once per ignition cycle when the above conditions are met.

Conditions for Setting the DTC

The ECM detects that the amount of time it takes for the ECT sensor to reach target temperature has exceeded a calibrated time.

Action Taken When the DTC Sets

- DTC P0128 is a Type B DTC.
- The engine is forced ON and Autostop is disabled.

Conditions for Clearing the DTC

DTC P0128 is a Type B DTC.

Reference Information

Schematic Reference

Engine Controls Schematics

Connector End View Reference

Component Connector End Views

Description and Operation

Hybrid Modes of Operation Description

Electrical Information Reference

- Circuit Testing
- Connector Repairs
- Testing for Intermittent Conditions and Poor Connections
- Wiring Repairs

DTC Type Reference

Powertrain Diagnostic Trouble Code (DTC) Type Definitions

Scan Tool Reference

Control Module References for scan tool information

Circuit/System Verification

1. Vehicle OFF, inspect the cooling system surge tank for the proper coolant level. Refer to Loss of Coolant and Cooling System Draining and Filling .
2. Vehicle in Service Mode, observe the DTC information with a scan tool. DTC P00B7, P0597, P0598, P0599, or P2181 should not be set.
   If a DTC is set, refer to Diagnostic Trouble Code (DTC) List - Vehicle .
3. Engine running for 15 min with the A/C OFF.

   Note: Depending on ambient temperature, it may take up to 4 min for the temperatures to equalise.

4. Command the engine coolant thermostat heater to 0% with a scan tool. Increase the engine speed to wide open throttle. Observe the scan tool ECT Sensor parameter. The temperature should increase to greater than 75°C (167°F).
   If less than the specified value, replace the E41 engine coolant thermostat heater.
5. Command the engine coolant thermostat heater to 100% with a scan tool. Increase the engine speed to wide open throttle. Observe the scan tool radiator coolant temperature sensor and the ECT Sensor parameters. The radiator coolant temperature sensor and the ECT Sensor parameters should be within 20°C (68°F).
6. Engine idling, observe the DTC information with a scan tool. DTC P0128 should not set.
7. Operate the vehicle within the Conditions for Running the DTC to verify the DTC does not reset. You may also operate the vehicle within the conditions that you observed from the freeze frame/failure records data.

Circuit/System Testing

1. Vehicle OFF, disconnect the harness connector at the B34 engine coolant temperature sensor.

2. Vehicle OFF, all systems OFF. It may take up to 2 minutes for all vehicle systems to power down.Test for less than 5 Ω between the low reference circuit terminal 2 and ground.
   If greater than the specified range, test the low reference circuit for an open/high resistance. If the circuit tests normal, replace the K20 engine control module.
3. Vehicle in Service Mode, verify the scan tool ECT Sensor parameter is colder than -39°C (-38°F).
   If warmer than the specified range, test the signal circuit terminal 2 for a short to ground. If the circuit tests normal, replace the K20 engine control module.

   Note: If the fuse in the jumper wire opens, the signal circuit is shorted to a voltage and the sensor may be damaged.

4. Install a 3A fused jumper wire between the signal circuit terminal 2 and the low reference circuit terminal 1. Verify the scan tool ECT Sensor parameter is greater than 130°C (266°F).
   If less than the specified range, test the signal circuit for a short to voltage or an open/high resistance. If the circuit tests normal, replace the K20 engine control module.
5. If all circuits test normal, test or replace the B34 engine coolant temperature sensor.

Component Testing

Static Test

1. Vehicle OFF, remove the engine coolant temperature sensor.

   Note: A thermometer can be used to test the sensor off the vehicle.

2. Test the B34 engine coolant temperature sensor by varying the sensor temperature while monitoring the sensor resistance. Compare the readings with the Temperature Versus Resistance table and verify that the resistance is within 5% of the specification.
   If not within the specified range, replace the B34 engine coolant temperature sensor.

Repair Instructions

Perform the Diagnostic Repair Verification after completing the diagnostic procedure.

- Engine Coolant Temperature Sensor Replacement : Thermostat → Water Outlet
- Control Module References for ECM replacement, setup, and programming

&#169© Copyright Chevrolet. All rights reserved

DTC P0131, P0132, P0134, P0137, P0138, or P0140

Diagnostic Instructions

- Perform the Diagnostic System Check - Vehicle prior to using this diagnostic procedure.
- Review Strategy Based Diagnosis for an overview of the diagnostic approach.
- Diagnostic Procedure Instructions provide an overview of each diagnostic category.

DTC Descriptors

DTC P0131: HO2S Circuit Low Voltage Sensor 1

DTC P0132: HO2S Circuit High Voltage Sensor 1

DTC P0134: HO2S Circuit Insufficient Activity Sensor 1

DTC P0137: HO2S Circuit Low Voltage Sensor 2

DTC P0138: HO2S Circuit High Voltage Sensor 2

DTC P0140: HO2S Circuit Insufficient Activity Sensor 2

Diagnostic Fault Information

Circuit	Short to Ground	High Resistance	Open	Short to Voltage	Signal Performance
HO2S Heater Voltage Supply	P0030, P0036, P0102, P0132, P0135, P0138, P0141, P0443, P0458, P0598, *	P0030, P0036, P0132, P0134, P0135, P0138, P0140, P0141	P0030, P0036, P0102, P0132, P0134, P0135, P0138, P0140, P0141, P0443, P0458, P0598	P0690	P0135, P0141
HO2S Heater Control	P0030, P0036, P0053, P0054, P0135, P0141	P0030, P0036, P0132, P0134, P0135, P0138, P0140, P0141	P0030, P0036, P0132, P0134, P0135, P0138, P0140, P0141	P0030, P0036, P0132, P0134, P0135, P0138, P0140, P0141	P0135, P0141

HO2S High Signal	P0131, P0137	P0132, P0134, P0138, P0140	P0132, P0134, P0138, P0140	P0132, P0134, P0138, P0140	P0133, P013A, P013B, P013E, P013F, P1133, P2A00
HO2S Low Signal	P0131, P0137	P0132, P0134, P0138, P0140	P0132, P0134, P0138, P0140	P0132, P0134, P0138, P0140	P0133, P013A, P013B, P013E, P013F, P1133, P2A00
*Opens Fuse					

Typical Scan Tool Data

HO2S 1 or 2

Circuit	Short to Ground	Open	Short to Voltage
Operating Conditions: Engine Running ***Parameter Normal Range:*** 200-800 mV			
HO2S 1 or 2 High Signal	0 mV	1,850-1,950 mV	1,850-1,950 mV
HO2S 1 or 2 Low Signal	0 mV	1,850-1,950 mV	1,850-1,950 mV

Circuit/System Description

The heated oxygen sensors (HO2S) are used for fuel control and catalyst monitoring. Each HO2S compares the oxygen content of the surrounding air with the oxygen content of the exhaust stream. When the engine is started, the engine control module (ECM) operates in an open loop mode, ignoring the HO2S signal voltage while calculating the air to fuel ratio. While the engine runs, the HO2S heats up and begins to generate a voltage within a range of 0-1,900 mV. Once sufficient HO2S voltage fluctuation is observed by the control module, closed loop is entered. The control module uses the HO2S voltage to determine the air-to-fuel ratio. An HO2S voltage that increases toward 1,000 mV indicates a rich fuel mixture. An HO2S voltage that decreases toward 0 mV indicates a lean fuel mixture.

The heating elements inside each HO2S heat the sensor to bring the sensor up to operating conditions faster. This allows the system to enter closed loop earlier and the control module to calculate the air to fuel ratio sooner.

This ECM uses a high bias voltage on the high and low signal circuits of the HO2S. The voltage measured between the low signal terminal and ground varies based on the temperature of the sensor and will typically be between 0-1,000 mV under normal operating conditions. The value of the high signal terminal measured to ground is equal to the value of the low signal measured to ground plus the 1,900 mV bias between the low signal and the high signal. In closed loop, the sensor functions in the same voltage range as systems with the low bias voltage. In open loop or open circuit conditions, the high bias voltage is present and takes the voltage outside of the normal operating range for easier fault detection.

Conditions for Running the DTC

P0131 or P0137

- DTCs P0106, P0107, P0108, P0122, P0123, P0201, P0202, P0203, P0204, P0222, P0223, P0442, P0443, P0449, P0452, P0453, P0455, P16F3, P2101, or P2135 are not set.
- The engine is running.
- The ignition voltage is between 10-32 V.
- The fuel system is in Closed Loop.
- The fuel control system is not in decel fuel cut off.
- The ECM is not performing any intrusive diagnostic tests.
- A scan tool output device control is not active.
- The fuel level is greater than 10 percent.
- Fuel has less than or equal to 87 percent ethanol.
- The DTCs run continuously when the above conditions are met for 5 s.

P0132 or P0138

- DTCsP0106, P0107, P0108, P0122, P0123, P0201, P0202, P0203, P0204 , P0222, P0223, P0411, P0442, P0443, P0449, P0452, P0453, P0455, P16F3, P2101, P2135, P2440, P2444 are not set.
- The ignition voltage is between 10-32 V.
- Fuel has less than or equal to 87 percent ethanol.
- The engine is running for greater than 195 s.
- The fuel level is greater than 10 percent.
- The fuel control is not in power enrichment.
- The DTCs run continuously when the above conditions are met for 5 s.

P0134 or P0140

- DTCsP0101, P0102, P0103, P0122, P0123, P0222, P0223, P16F3, P2101, P2103, P2135 are not set.
- The HO2S heaters are at operating temperature.
- The ignition voltage is between 10-32 V.
- The engine run time is greater than 150 s.
- DTC P0134 runs continuously when the above conditions are met.

Conditions for Setting the DTC

P0131 or P0137

The ECM detects that the HO2S voltage is less than 50 mV for greater than 48 s for DTC P0131 or 54 s for DTC P0137.

P0132 or P0138

The ECM detects that the HO2S voltage is greater than 1,050 mV for greater than 13 s.

P0134 or P0140

The ECM detects that the HO2S voltage is greater than 1,700 mV for greater than 25 s.

Action Taken When the DTC Sets

DTCs P0131, P0132, P0137, and P0138 are Type B DTCs.

Conditions for Clearing the DTC

DTCs P0131, P0132, P0137, and P0138 are Type B DTCs.

Reference Information

Schematic Reference

Engine Controls Schematics

Connector End View Reference

Component Connector End Views

Description and Operation

Hybrid Modes of Operation Description

Electrical Information Reference

- Circuit Testing
- Connector Repairs
- Testing for Intermittent Conditions and Poor Connections
- Wiring Repairs

DTC Type Reference

Powertrain Diagnostic Trouble Code (DTC) Type Definitions

Scan Tool Reference

Control Module References for scan tool information

Circuit/System Verification

1. Vehicle in Service Mode, observe the DTC information with a scan tool. Verify no HO2S heater DTCs are set.
   If a DTC is set, refer to Diagnostic Trouble Code (DTC) List - Vehicle .
2. Engine running, observe the appropriate scan tool HO2S 1 or 2 voltage parameter. The reading should vary between 50-1,050 mV.
3. Operate the vehicle within the conditions for running the DTC to verify the DTC does not reset. You may also operate the vehicle within the conditions that you observed from the freeze frame/failure records data.

Circuit/System Testing

1. Vehicle OFF, disconnect the harness connector at the appropriate B52 HO2S.
2. Vehicle in Service Mode, observe the scan tool HO2S 1 or 2 voltage parameter. The parameter should display between 1,850-1,950 mV.
   If less than the specified range, test the high and low signal circuits for a short to ground. If both signal circuits test normal, replace the K20 ECM.
3. Test for 1,850-3,000 mV between the high signal circuit terminal listed below and ground.
   - B52 HO2S 1 high signal terminal 4
   - B52 HO2S 2 high signal terminal B

   If less than the specified range, test the high signal circuit for an open/high resistance. If the circuit tests normal, replace the K20 ECM.
   If greater than the specified range, test the high signal circuit for a short to voltage. If the circuit tests normal, replace the K20 ECM.
4. Connect a 3 A fused jumper wire between the high signal circuit and low signal circuit terminals listed below:
   - B52 HO2S 1 high signal circuit terminal 4 to low signal circuit terminal 3
   - B52 HO2S 2 high signal circuit terminal B to low signal circuit terminal A

   Note: The low signal circuit is tied to a pull-up circuit within the ECM. A voltage of 0-1,100 mV on the low signal circuit is normal.

5. Verify the scan tool HO2S 1 or 2 voltage parameter displays 0.0 mV.
   If greater than the specified range, test the low signal circuit for an open/high resistance or for a short to voltage. If the circuit tests normal, replace the K20 ECM.
6. Verify none of the following conditions exist:
   - Lean or rich fuel injectors--Refer to Fuel Injector Solenoid Coil Test
   - Water intrusion in the B52 HO2S harness connector
   - Low or high fuel system pressure--Refer to Fuel System Diagnosis
   - Fuel that is contaminated--Refer to Alcohol/Contaminants-in-Fuel Diagnosis

     Fuel saturation of the evaporative emission (EVAP) canister

-
- Exhaust leaks
- Engine vacuum leaks
- Engine oil consumption--Refer to Oil Consumption Diagnosis
- Engine coolant consumption--Refer to Loss of Coolant

If you find any of the above conditions, repair as necessary.

7. If all circuits test normal, test or replace the appropriate B52 HO2S.

Repair Instructions

Perform the Diagnostic Repair Verification after completing the diagnostic procedure.

- Heated Oxygen Sensor Replacement - Sensor 1
- Heated Oxygen Sensor Replacement - Sensor 2
- Perform the scan tool Heated Oxygen Sensor Resistance Learn Reset after replacing a HO2S.
- Control Module References for ECM replacement, setup, and programming

&#169© Copyright Chevrolet. All rights reserved

DTC P0133, P013A, P013B, P013E, P013F, P1133, P2270, P2271, or P2A00

Diagnostic Instructions

- Perform the Diagnostic System Check - Vehicle prior to using this diagnostic procedure.
- Review Strategy Based Diagnosis for an overview of the diagnostic approach.
- Diagnostic Procedure Instructions provide an overview of each diagnostic category.

DTC Descriptors

DTC P0133: HO2S Slow Response Sensor 1

DTC P013A: HO2S Slow Response Rich to Lean Sensor 2

DTC P013B: HO2S Slow Response Lean to Rich Sensor 2

DTC P013E: HO2S Delayed Response Rich to Lean Sensor 2

DTC P013F: HO2S Delayed Response Lean to Rich Sensor 2

DTC P1133: HO2S Insufficient Switching Sensor 1

DTC P2270: HO2S Signal Stuck Lean Sensor 2

DTC P2271: HO2S Signal Stuck Rich Sensor 2

DTC P2A00: HO2S Circuit Closed Loop Performance Sensor 1

Diagnostic Fault Information

Circuit	Short to Ground	High Resistance	Open	Short to Voltage	Signal Performance
HO2S Heater	P0030, P0036, P0102, P0132,	P0030, P0036, P0132,	P0030, P0036, P0102, P0132, P0134,		

Voltage Supply	P0135, P0138, P0141, P0443, P0458, P0598, *	P0134, P0135, P0138, P0140, P0141	P0135, P0138, P0140, P0141, P0443, P0458, P0598	P0690	P0135, P0141
HO2S Heater Control	P0030, P0036, P0053, P0054, P0135, P0141	P0030, P0036, P0132, P0134, P0135, P0138, P0140, P0141	P0030, P0036, P0132, P0134, P0135, P0138, P0140, P0141	P0030, P0036, P0132, P0134, P0135, P0138, P0140, P0141	P0135, P0141
HO2S High Signal	P0131, P0137	P0132, P0134, P0138, P0140	P0132, P0134, P0138, P0140	P0132, P0134, P0138, P0140	P0133, P013A, P013B, P013E, P013F, P1133, P2A00
HO2S Low Signal	P0131, P0137	P0132, P0134, P0138, P0140	P0132, P0134, P0138, P0140	P0132, P0134, P0138, P0140	P0133, P013A, P013B, P013E, P013F, P1133, P2A00
*Opens Fuse					

Typical Scan Tool Data

HO2S 1 or 2

Circuit	Short to Ground	Open	Short to Voltage
Operating Conditions: Engine Running ***Parameter Normal Range:*** 200-800 mV			
HO2S 1 or 2 High Signal	0 mV	1,850-1,950 mV	1,850-1,950 mV
HO2S 1 or 2 Low Signal	0 mV	1,850-1,950 mV	1,850-1,950 mV

Circuit/System Description

The heated oxygen sensors (HO2S) are used for fuel control and catalyst monitoring. Each HO2S compares the oxygen content of the surrounding air with the oxygen content of the exhaust stream. When the engine is started, the engine control module (ECM) operates in an open loop mode, ignoring the HO2S signal voltage while calculating the air to fuel ratio. While the engine runs, the HO2S heats up and begins to generate a voltage within a range of 0-1,900 mV. Once sufficient HO2S voltage fluctuation is observed by the ECM, closed loop is entered. The ECM uses the HO2S voltage to determine the air to fuel ratio. An HO2S voltage that increases toward 1,000 mV indicates a rich fuel mixture. An HO2S voltage that decreases toward 0 mV indicates a lean fuel mixture.

The heating elements inside each HO2S heat the sensor to bring the sensor up to operating conditions faster. This allows the system to enter closed loop earlier and the ECM to calculate the air to fuel ratio sooner.

This ECM uses a high bias voltage on the high and low signal circuits of the HO2S. The voltage measured between the low signal terminal and ground varies based on the temperature of the sensor and will typically be between 0-1,000 mV under normal operating conditions. The value of the high signal terminal measured to ground is equal to the value of the low signal measured to ground plus the 1,900 mV bias between the low signal and the high signal. In closed loop, the sensor functions in the same voltage range as systems with the low bias voltage. In open loop or open circuit conditions, the high bias voltage is present and takes the voltage outside of the normal operating

range for easier fault detection.

Conditions for Running the DTC

P0133 or P1133

- DTCsP0101, P0102, P0103, P0106, P0107, P0108, P0111, P0112, P0113, P0114, P0116, P0117, P0118, P0119, P0122, P0123, P0128, P0131, P0132, P0134, P0201, P0202, P0203, P0204, P0222, P0223, P0300, P0301, P0302, P0303, P0304, P0442, P0443, P0449, P0452, P0453, P0455, P16F3, P2101, P2135 are not set.
- The engine coolant temperature (ECT) is greater than 50°C (122°F).
- The ignition voltage is between 10-32 V.
- The fuel level is greater than 10 percent.
- The engine run time is greater than 90 s.
- The inlet air temperature (IAT) is greater than -40°C (-40°F).
- The HO2S heater is ON for greater than 40 s.
- The fuel alcohol content is less than 87 percent ethanol.
- The engine speed is between 1,000-3,500 RPM.
- Barometric (BARO) pressure is greater than 70 kPa (10 psi).
- The mass air flow (MAF) is between 17-40 g/s.
- The fuel system is in Closed Loop.
- A scan tool output device control is not active.
- The fuel control system is not in decel fuel cut-off (DFCO)
- The fuel control state is not in Power Enrichment.
- The DTCs run once per drive cycle when the above conditions are met for greater than 1 s.

P013A or P013E

- DTCs P0101, P0102, P0103, P0106, P0107, P0108, P0111, P0112, P0113, P0114, P0116, P0117, P0118, P0119, P0122, P0123, P0128, P0171, P0172, P0201, P0202, P0203, P0204, P0222, P0223, P0300, P0301, P0302, P0303, P0304, P16F3, P2101, or P2135 are not set.
- The ignition voltage is between 10-32 V.
- The fuel level is greater than 10 percent.
- DTC P2270 has run and passed.
- DTC P013E has run and passed for P013A.
  Then
- The fuel control system is in decel fuel cut-off (DFCO)
- The DTCs run once per drive cycle when the above conditions are met.

P013B or P013F

- DTCs P0101, P0102, P0103, P0106, P0107, P0108, P0111, P0112, P0113, P0114, P0116, P0117, P0118, P0119, P0122, P0123, P0128, P0171, P0172, P0201, P0202, P0203, P0204, P0222, P0223, P0300, P0301, P0302, P0303, P0304, P16F3, P2101, or P2135 are not set.
- DTCsP013A, P013E, P013F, P2270, and P2271 have run and passed.
- DTCs P013F has run and passed for P013B.
- The ignition voltage is between 10-32 V.
- The fuel level is more than 10 percent.
  Then
- The fuel control system is in fuel enrichment mode.
- The DTCs run once per drive cycle when the above conditions are met.

P2270 or P2271

- DTCsP0101, P0102, P0103, P0106, P0107, P0108, P0111, P0112, P0113, P0114, P0116, P0117, P0118, P0119, P0122, P0123, P0128, P0171, P0172, P0201, P0202, P0203, P0204, P0222, P0223, P0300, P0301, P0302, P0303, P0304, P16F3, P2101, P2135 are not set.
- The ignition voltage is between 10-32 V.
- The fuel level is greater than 10 percent.
- The engine speed is between 1,800-3,500 RPM.
- The airflow is between 18-28 g/s.
- The vehicle speed is between 40-145 km/h (25-90 MPH).
- The fuel control system is in decel fuel cut-off (DFCO)
- The engine is operating in Closed Loop.
- The evaporative emission (EVAP) diagnostics are not in control of purge.
- The HO2S heater is ON for greater than 60 s.
- The catalyst temperature is between 0-1,000°C (32-1,832°F).
- DTCs P013A, P013E, and P2270 have run and passed. --P2271 only
- DTC P2270 runs once per trip when all of the above conditions have been met for 3 s.
- DTC P2271 runs once per trip.

P2A00

- DTCsP0106, P0107, P0108, P0116, P0117, P0118, P0119, P0122, P0123, P0128, P0131, P0132, P0201, P0202, P0203, P0204, P0222, P0223, P16F3, P2101, P2135 are not set.
- The ignition voltage is between 10-32 V.
- The engine run time is greater than 100 s.
- The engine speed is between 1,000-3,400 RPM.
- The ignition voltage is between 10-32 V.
- The engine air flow is between 4-30 g/s.
- The engine coolant temperature is warmer than 70°C (158°F).

- The fuel control system is not in decel fuel cut-off (DFCO)
- The fuel control system is in fuel enrichment mode.
- DTC P2A00 runs continuously when the above conditions are met for 5 s.

Conditions for Setting the DTC

P0133

- The ECM detects that the heated oxygen sensor (HO2S) 1 rich to lean or lean to rich average response time is greater than a calibrated threshold value.
- DTC P0133 sets within 60 s when the above condition is met.

P013A

The accumulated mass air flow monitored during rich to lean transitions between 450-150 mV is greater than a calibrated value.

P013B

The accumulated mass air flow monitored during rich to lean transitions between 350-600 mV is greater than a calibrated value.

P013E

- The ECM detects that the heated oxygen sensor (HO2S) 2 cannot achieve voltage below 450 mV.
  and
- The accumulated mass air flow monitored during the Delayed Response Test under DFCO is greater than a calibrated value.

P013F

- The ECM detects that the heated oxygen sensor (HO2S) 2 cannot achieve voltage above 350 mV.
  and
- The accumulated mass air flow monitored during the Delayed Response Test is greater than a calibrated value.

P1133

- The ECM detects that the heated oxygen sensor (HO2S) 1 rich-to-lean counts, or the lean-to-rich counts are less than a calibrated value.
- DTC P1133 sets within 60 s when the above condition is met.

P2270

- The heated oxygen sensor (HO2S) 2 sensor cannot achieve voltage greater than 850 mV.
  and
- The accumulated mass air flow monitored during the Stuck Lean Voltage Test is greater than a calibrated value.

P2271

- The ECM detects that the heated oxygen sensor (HO2S) 2 sensor cannot achieve voltage less than 100 mV.
  and
- The accumulated mass air flow monitored during the stuck rich voltage test is greater than a calibrated value.

P2A00

- The HO2S 1 is greater than 1,100 mV for greater than 5 s and the engine is not in closed loop.
- DTC P2A00 sets within 25 s when the above condition is met.

Action Taken When the DTC Sets

- DTCs P0133, P013E, P013F, P1133, P2270, P2271, P2A00 are Type B DTCs.
- DTCs P013A and P013B are Type A DTCs.

Conditions for Clearing the DTC

- DTCs P0133, P013E, P013F, P1133, P2270, P2271, P2A00 are Type B DTCs.
- DTCs P013A and P013B are Type A DTCs.

Reference Information

Schematic Reference

Engine Controls Schematics

Connector End View Reference

Component Connector End Views

Description and Operation

Hybrid Modes of Operation Description

Electrical Information Reference

- Circuit Testing
- Connector Repairs
- Testing for Intermittent Conditions and Poor Connections
- Wiring Repairs

DTC Type Reference

Powertrain Diagnostic Trouble Code (DTC) Type Definitions

Scan Tool Reference

Control Module References for scan tool information

Circuit/System Verification

1. Vehicle ON, observe the DTC information with a scan tool. Verify no other HO2S DTCs are set.
   If a DTC is set, refer to Diagnostic Trouble Code (DTC) List - Vehicle .
2. Operate the vehicle within the Conditions for Running the DTC to verify the DTC does not reset. You may also operate the vehicle within the conditions that you observed from the Freeze Frame/Failure Records data.

Circuit/System Testing

1. Verify none of the following conditions exist:
   - Lean or rich fuel injectors--Refer to Fuel Injector Solenoid Coil Test
   - Water intrusion in the B52 HO2S harness connector
   - Low or high fuel system pressure--Refer to Fuel System Diagnosis
   - Fuel that is contaminated--Refer to Alcohol/Contaminants-in-Fuel Diagnosis
   - Fuel saturation of the evaporative emission (EVAP) canister
   - Exhaust leaks
   - Engine vacuum leaks
   - Engine oil consumption--Refer to Oil Consumption Diagnosis
   - Engine coolant consumption--Refer to Loss of Coolant

   If you find any of the above conditions, repair as necessary.
2. Vehicle OFF, disconnect the harness connector at the appropriate B52 heated oxygen sensor.

3. Vehicle in Service Mode, observe the scan tool HO2S 1 or 2 voltage parameter. The parameter should display between 1,850-1,950 mV.
   If less than the specified range, test the high and low signal circuits for a short to ground. If both signal circuits test normal, replace the K20 ECM.
4. Test for 1,850-3,000 mV between the high signal circuit terminal listed below and ground.
   - B52 HO2S 1 high signal terminal 4
   - B52 HO2S 2 high signal terminal B

   If less than the specified range, test the high signal circuit for an open/high resistance. If the circuit tests normal, replace the K20 ECM.
   If greater than the specified range, test the high signal circuit for a short to voltage. If the circuit tests normal, replace the K20 ECM.
5. Vehicle OFF, connect a 3 A fused jumper wire between the high signal circuit and the low signal circuit terminals listed below.
   - B52 HO2S 1 high signal circuit terminal 4 to low signal circuit terminal 3
   - B52 HO2S 2 high signal circuit terminal B to low signal circuit terminal A

   Note: The low signal circuit is tied to a pull-up circuit within the ECM. A voltage of 0-1,100 mV on the low signal circuit is normal.

6. Vehicle in Service Mode, verify the scan tool HO2S 1 or 2 voltage parameter displays 0.0 mV.
   If greater than the specified range, test the low signal circuit for an open/high resistance or for a short to voltage. If the circuit tests normal, replace the K20 ECM.
7. If all circuits test normal, test or replace the B52 HO2S.

Repair Instructions

Perform the Diagnostic Repair Verification after completing the diagnostic procedure.

- Heated Oxygen Sensor Replacement - Sensor 1
- Heated Oxygen Sensor Replacement - Sensor 2
- Perform the scan tool Heated Oxygen Sensor Resistance Learn Reset after replacing a HO2S.
- Control Module References for ECM replacement, setup, and programming

&#169© Copyright Chevrolet. All rights reserved

DTC P0171 or P0172

Diagnostic Instructions

- Perform the Diagnostic System Check - Vehicle prior to using this diagnostic procedure.
- Review Strategy Based Diagnosis for an overview of the diagnostic approach.
- Diagnostic Procedure Instructions provides an overview of each diagnostic category.

DTC Descriptors

DTC P0171: Fuel Trim System Lean

DTC P0172: Fuel Trim System Rich

Circuit/System Description

The engine control module (ECM) controls the air/fuel metering system in order to provide the best possible combination of driveability, fuel economy, and emission control. The ECM monitors the heated oxygen sensor (HO2S) signal voltage and adjusts the fuel delivery based on the signal voltage while in Closed Loop. A change made to the fuel delivery changes the long and short term fuel trim (FT) values. The short term FT values change rapidly in response to the HO2S voltage signals. These changes fine tune the engine fuelling. The long term FT makes coarse adjustments in order to maintain an optimum air/fuel ratio. The ideal FT values are around zero percent. A positive FT value indicates that the ECM is adding fuel in order to compensate for a lean condition. A negative FT value indicates that the ECM is reducing the amount of fuel in order to compensate for a rich condition.

Conditions for Running the DTC

- DTCs P0030, P0053, P0101, P0102, P0103, P0106, P0107, P0108, P0112, P0113, P0114, P0121, P0122, P0123, P0131, P0132, P0133, P0134, P0135, P0201, P0202, P0203, P0204, P0300, P0301, P0302, P0303, P0304, P0442, P0455, P0458, and P2A00 are not set.
- The engine is in Closed Loop.
- The catalyst monitor intrusive test, post HO2S intrusive test, device controls and EVAP leak test are not active.
- The engine coolant temperature (ECT) is between -38 to +130°C (-36.4 to +266°F).
- The inlet air temperature (IAT) is between -20 to +150°C (-4 to +302°F).
- The manifold absolute pressure (MAP) is between 15-255 kPa (2-37 PSI).

- The engine speed is between 400-6,100 RPM.
- The engine airflow is between 1-512 g/s.
- The fuel level is greater than 10%.
- The barometric pressure (BARO) is more than 70 kPa.
- These DTCs run continuously when the above conditions have been met.

Conditions for Setting the DTC

- The long term FT weighted average value is more or less than a calibrated value.
- The above condition is present for approximately 3 min after the conditions for running the DTC have been met.

Action Taken When the DTC Sets

DTCs P0171 and P0172 are type B DTCs.

Conditions for Clearing the DTC

DTCs P0171 and P0172 are type B DTCs.

Diagnostic Aids

- The system will become lean if a fuel injector is not supplying enough fuel -- P0171.
- A lean condition may be present during high fuel demand due to a fuel pump that does not deliver enough fuel, a plugged fuel filter, or a restricted fuel pipe -- P0172.
- The system will become rich if a fuel injector is supplying too much fuel -- P0172.
- An exhaust system leak that may not be audible but can cause a DTC to set.
- Certain aftermarket air filters may cause a DTC to set.
- Certain aftermarket induction systems or modifications to the air induction system may cause a DTC to set.
- Certain aftermarket exhaust system components may cause a DTC to set.

Reference Information

Schematic Reference

Engine Controls Schematics

Connector End View Reference

Component Connector End Views

Description and Operation

Hybrid Modes of Operation Description

Electrical Information Reference

- Circuit Testing
- Connector Repairs
- Testing for Intermittent Conditions and Poor Connections
- Wiring Repairs

DTC Type Reference

Powertrain Diagnostic Trouble Code (DTC) Type Definitions

Scan Tool Reference

Control Module References for scan tool information

Circuit/System Verification

1. Vehicle in Service Mode, verify that other DTCs are not set.
   If any DTCs are set, refer to Diagnostic Trouble Code (DTC) List - Vehicle .
2. Observe the MAP Sensor parameter. The MAP Sensor pressure should be within the range specified for your altitude. Refer to Altitude Versus Barometric Pressure .
   If not within the specified range, refer to DTC P0106 .
3. Vehicle ON, engine speed between 1,375--1,425 RPM, normal operating temperature. Verify the scan tool MAF Sensor parameter is between 1,800-2,400 Hz.
   If not within the specified range, refer to DTC P0101 .
4. Observe the Long Term Fuel Trim parameter with a scan tool. The reading should be between -19 to +24%.
   If not within the specified range, verify none of the following conditions exist:

   P0171

   - Vacuum hoses for splits, kinks, and improper connections.
   - Insufficient fuel in the tank.
   - Low fuel pressure, refer to Fuel System Diagnosis .
   - Ethanol concentration greater than 15%, refer to Alcohol/Contaminants-in-Fuel Diagnosis .
   - Fuel contamination, refer to Alcohol/Contaminants-in-Fuel Diagnosis .

- Malfunctioning fuel injectors, refer to Fuel Injector Solenoid Coil Test .
- Missing, loose, or leaking exhaust components from the Heated Oxygen Sensor 1 forward, refer to Symptoms - Engine Exhaust .
- Vacuum leaks at the inlet manifold, the throttle body, and the fuel injector O-rings.
- The air induction system and the air inlet ducts for leaks or for a missing air filter element.
- A cracked EVAP canister.
- Evaporative pipes obstructed or leaking.
- The crankcase ventilation system for leaks.

P0172

- Vacuum hoses for splits, kinks, and improper connections
- The air inlet duct for being collapsed or restricted
- The air filter for being dirty or restricted
- Objects blocking the throttle body
- Excessive fuel in the crankcase due to leaking fuel injectors
- The EVAP control system for improper operation, refer to Evaporative Emission Control System Diagnosis .
- Excessive fuel pressure, refer to Fuel System Diagnosis .
- Malfunctioning fuel injectors, refer to Fuel Injector Solenoid Coil Test .
- Fuel contamination, refer to Alcohol/Contaminants-in-Fuel Diagnosis .

5. If all conditions test normal, test the engine for a mechanical condition. Refer to Symptoms - Engine Mechanical
6. Operate the vehicle within the conditions for running the DTC to verify the DTC does not reset. You may also operate the vehicle within the conditions that you observed from the freeze frame/failure records data.

Repair Instructions

Perform the Diagnostic Repair Verification after completing the diagnostic procedure.

&#169© Copyright Chevrolet. All rights reserved

DTC P018B-P018D

Diagnostic Instructions

- Perform the Diagnostic System Check - Vehicle prior to using this diagnostic procedure.
- Review Strategy Based Diagnosis for an overview of the diagnostic approach.
- Diagnostic Procedure Instructions provides an overview of each diagnostic category.

DTC Descriptors

DTC P018B: Fuel Pressure Sensor Performance

DTC P018C: Fuel Pressure Sensor Circuit Low Voltage

DTC P018D: Fuel Pressure Sensor Circuit High Voltage

Diagnostic Fault Information

Circuit	Short to Ground	Open/High Resistance	Short to Voltage	Signal Performance
5 V Reference	P018C, P0641	P018C	P018D, P0641	P06A6
Signal	P018C	P018C	P018D	P018B
Low Reference	-	P018D	-	P06A6

Circuit/System Description

The fuel pressure sensor is located on the fuel line. The fuel pressure sensor monitors the fuel pressure in the fuel line. The fuel pump control module monitors the voltage signal from the fuel pressure sensor.

Conditions for Running the DTC

- The engine is running.
- DTC P018C, P018D, P0231, P0232, P023F, P064A, P1255 or P06A6 are not active.

- DTC P0641 has not failed this ignition cycle.
- Fuel pump control is enabled and the fuel pump control state is normal.
- The engine has been running for at least 5 seconds.

Conditions for Setting the DTC

The fuel pump control module does not detect a change in the fuel pressure of at least 30 kPa (4.4 psi) when the fuel pump is operating. The fuel pressure sensor performance diagnostic provides a means to detect fuel pressure sensor output that is stuck within the normal operating range of the sensor.

Action Taken When the DTC Sets

DTC P018B, P018C and P018D are Type A DTCs.

Conditions for Clearing the DTC

DTC P018B, P018C and P018D are Type A DTCs.

Diagnostic Aids

Using the Failure Records data may help locate an intermittent condition. If you cannot duplicate the DTC, the information in the Failure Records can help determine how many miles since the DTC set. The Fail Counter and Pass Counter can help determine how many ignition cycles that the diagnostic test reported a pass and/or a fail.

Reference Information

Schematic Reference

Engine Controls Schematics

Connector End View Reference

Component Connector End Views

Description and Operation

Fuel System Description

Electrical Information Reference

- Circuit Testing

- Testing for Intermittent Conditions and Poor Connections
- Connector Repairs
- Wiring Repairs

DTC Type Reference

Powertrain Diagnostic Trouble Code (DTC) Type Definitions

Scan Tool Reference

Control Module References for scan tool information

Circuit/System Testing

Note: Verify that the fuel tank is not empty. Only perform this diagnostic if there is at least 2 gallons of fuel in the fuel tank. Clear the DTC, and start and run the engine. Verify that the DTC P018B resets before proceeding with the circuit system testing. If the DTC does not reset, refer to diagnostic aids.

1. Vehicle OFF, disconnect the harness connector at the B47 fuel pressure sensor.
2. Vehicle OFF. It may take up to 2 minutes for all vehicle systems to power down. Test for less than 10 Ω between the low reference circuit terminal 2 and ground.
   If greater than the specified range, test the low reference circuit for an open/high resistance. If the circuit tests normal, replace the K27 fuel pump flow control module.
3. Vehicle in Service Mode, test for 4.8-5.2 V between the B47 fuel pressure sensor 5 V reference circuit terminal 3 and ground.
   If less than the specified range, test the 5 V reference circuit for a short to ground or an open/high resistance. If the circuit tests normal, replace the K27 fuel pump flow control module.
   If greater than the specified range, test the 5 V reference circuit for a short to voltage. If the circuit tests normal, replace the K27 fuel pump flow control module.
4. Verify the scan tool fuel pressure sensor voltage is less than 1 V.
   If greater than the specified range, test the signal circuit terminal 1 for a short to voltage. If the circuit tests normal, replace the K27 fuel pump flow control module.
5. Install a 3 A fused jumper wire between the signal circuit terminal 1 and the 5 V reference circuit terminal 3. Verify the scan tool fuel pressure sensor voltage is greater than 4.8 V.
   If less than the specified range, test the signal circuit for a short to ground or an open/high resistance. If the circuit tests normal, replace the K27 fuel pump flow control module.
6. If all circuits test normal, replace the B47 fuel pressure sensor.

Repair Instructions

Perform the Diagnostic Repair Verification after completing the repair.

- Fuel Pressure Sensor Replacement - Fuel Feed Pipe
- Control Module References for fuel pump control module replacement, programming and setup

&#169© Copyright Chevrolet. All rights reserved

DTC P0201, P0202, P0203, or P0204

Diagnostic Instructions

- Perform the Diagnostic System Check - Vehicle prior to using this diagnostic procedure.
- Review Strategy Based Diagnosis for an overview of the diagnostic approach.
- Diagnostic Procedure Instructions provides an overview of each diagnostic category.

DTC Descriptor

DTC P0201: Cylinder 1 Injector Control Circuit

DTC P0202: Cylinder 2 Injector Control Circuit

DTC P0203: Cylinder 3 Injector Control Circuit

DTC P0204: Cylinder 4 Injector Control Circuit

Diagnostic Fault Information

Circuit	Short to Ground	Open/High Resistance	Short to Voltage
Ignition Voltage	P0AB9, P0AC4, P0201, P0202, P0203, P0204, P16E0	P0AB9, P0AC4, P0201, P0202, P0203, P0204, P16E0	-
Fuel Injector 1 Control	P0201, P0300	P0201, P0300	P0201, P0300
Fuel Injector 2 Control	P0202, P0300	P0202, P0300	P0202, P0300
Fuel Injector 3 Control	P0203, P0300	P0203, P0300	P0203, P0300
Fuel Injector 4 Control	P0204, P0300	P0204, P0300	P0204, P0300

Circuit/System Description

The engine control module (ECM) enables the appropriate fuel injector pulse for each cylinder. Ignition voltage is supplied to the fuel injectors. The ECM controls each fuel injector by grounding the control circuit via a solid state device called a driver. The ECM monitors the status of each driver. If the ECM detects an incorrect voltage for the commanded state of the driver, a fuel injector control circuit DTC sets.

Conditions for Running the DTC

- The engine is running.
- The ignition voltage is greater than 11 V for greater than 5 s.
- These DTCs run continuously when the above conditions are met.

Conditions for Setting the DTC

- The ECM detects an incorrect voltage on the fuel injector control circuit.
- The above condition is met for greater than 6 s.

Action Taken When the DTC Sets

DTCs P0201, P0202, P0203, and P0204 are Type B DTCs.

Conditions for Clearing the DTC

DTCs P0201, P0202, P0203, and P0204 are Type B DTCs.

Diagnostic Aids

- High resistance in the circuits of the injectors may set a misfire DTC without setting an injector DTC. Test the injector circuits of the affected cylinders for a high resistance if you suspect a condition.
- Performing the Fuel Injector Solenoid Coil Test may help isolate an intermittent condition.

Reference Information

Schematic Reference

Engine Controls Schematics

Connector End View Reference

Component Connector End Views

Description and Operation

- Fuel System Description

- Hybrid Modes of Operation Description

Electrical Information Reference

- Circuit Testing
- Connector Repairs
- Testing for Intermittent Conditions and Poor Connections
- Wiring Repairs

DTC Type Reference

Powertrain Diagnostic Trouble Code (DTC) Type Definitions

Scan Tool Reference

Control Module References for scan tool information

Special Tools

J 34730-2C Test Lamp

For equivalent regional tools, refer to Special Tools : Diagnostic Tools .

Circuit/System Verification

1. Engine running, observe the following control circuit status parameters:
   - Cylinder 1-4 Injector Control Circuit Low Voltage Test Status
   - Cylinder 1-4 Injector Control Circuit Open Test Status
   - Cylinder 1-4 Injector Control Circuit High Voltage Test Status

   Each parameter should toggle between OK and Not Run or Not Run and OK.
2. Observe the DTC information with a scan tool. DTCs P0201, P0202, P0203, or P0204 should not set.
3. Operate the vehicle within the Conditions for Running the DTC to verify the DTC does not reset. You may also operate the vehicle within the conditions that you observed from the Freeze Frame/Failure Records data.

Circuit/System Testing

1. Vehicle OFF, disconnect the harness connector at the appropriate Q17 fuel injector.
2. Vehicle in Service Mode, verify that a test lamp illuminates between the ignition circuit terminal 1 and ground.

If the test lamp does not illuminate, test the ignition circuit for a short to ground or an open/high resistance. If the circuit tests normal and the ignition circuit fuse is open, test all components connected to the ignition circuit and replace as necessary.

3. Test for 2.5-3.5 V between the control circuit terminal 2 and ground.
   If less than the specified range, test the control circuit for a short to ground or an open/high resistance. If the circuit tests normal, replace the K20 ECM.
   If greater than the specified range, test the control circuit for a short to voltage. If the circuit tests normal, replace the K20 ECM.
4. Vehicle OFF, connect a *J 34730-2C* Test Lamp to the Q17 fuel injector harness connector.
5. Engine running, the test lamp should flash.
   If the test lamp is always ON, test the control circuit for a short to ground. If the circuit tests normal, replace the K20 ECM.
   If the test lamp is always OFF, test the control circuit for a short to voltage or an open/high resistance. If the circuit tests normal, replace the K20 ECM.
6. If all circuits test normal, test or replace the Q17 fuel injector.

Component Testing

- Fuel Injector Solenoid Coil Test
- Fuel Injector Balance Test

Repair Instructions

Perform the Diagnostic Repair Verification after completing the diagnostic procedure.

- Fuel Injector Replacement
- Control Module References for ECM replacement, setup, and programming

&#169© Copyright Chevrolet. All rights reserved

DTC P0231, P0232, or P023F

Diagnostic Instructions

- Perform the Diagnostic System Check - Vehicle prior to using this diagnostic procedure.
- Review Strategy Based Diagnosis for an overview of the diagnostic approach.
- Diagnostic Procedure Instructions provides an overview of each diagnostic category.

DTC Descriptors

DTC P0231: Fuel Pump Control Circuit Low Voltage

DTC P0232: Fuel Pump Control Circuit High Voltage

DTC P023F: Fuel Pump Control Circuit

Diagnostic Fault Information

Circuit	Short to Ground	Open/High Resistance	Short to Voltage	Signal Performance
Control	P0231	P023F	P0232	P023F, P2635
Low Reference	-	P023F	-	P023F, P2635

Circuit/System Description

The engine control module (ECM) supplies voltage to the fuel pump control module when the ECM detects that the ignition is on. The voltage from the ECM to the fuel pump control module remains active for 2 seconds, unless the engine is in crank or run. While this voltage is being received, the fuel pump control module supplies a varying voltage to the fuel tank pump module in order to maintain the desired fuel rail pressure.

Conditions for Running the DTC

P0231, P023F

The ignition voltage is between 9-18 V.

P0232

The control enable voltage signal supplied for the ECM to fuel pump control module is inactive for 4 seconds after engine has been shut off.

Conditions for Setting the DTC

The fuel pump control module detects a fault on the fuel pump voltage circuit that is less than 11 V or greater than 18 V.

Action Taken When the DTC Sets

DTCs P0231, P0232, and P023F are Type A DTCs.

Conditions for Clearing the DTC

DTCs P0231, P0232, and P023F are Type A DTCs.

Diagnostic Aids

Using the Failure Records data may help locate an intermittent condition. If you cannot duplicate the DTC, the information in the Failure Records can help determine how many miles since the DTC set. The Fail Counter and Pass Counter can help determine how many ignition cycles that the diagnostic test reported a pass and/or a fail.

On vehicles equipped with a high pressure mechanical pump on Direct Fuel Injection engines, the vehicle may continue to run even though the pump in the fuel tank is not operating.

Reference Information

Schematic Reference

Engine Controls Schematics

Connector End View Reference

Component Connector End Views

Description and Operation

Fuel System Description

Electrical Information Reference

- Circuit Testing
- Connector Repairs
- Testing for Intermittent Conditions and Poor Connections
- Wiring Repairs

DTC Type Reference

Powertrain Diagnostic Trouble Code (DTC) Type Definitions

Scan Tool Reference

Control Module References for scan tool information

Circuit/System Verification

Vehicle in Service Mode, command the fuel pump ON and OFF using the scan tool ECM fuel pump output control. The fuel pump should turn ON and OFF.

Circuit/System Testing

1. Vehicle OFF, disconnect the harness connector at the G12 fuel pump.
2. Connect a test lamp between the control circuit terminal 1 and ground.
3. Vehicle in Service Mode, command the G12 fuel pump ON and OFF with a scan tool. The test lamp should turn ON and OFF, as commanded.
   If the test lamp is always ON, test the control circuit for a short to voltage. If the circuit tests normal, replace the K27 fuel pump control module.
   If the test lamp is always OFF, test the control circuit for a short to ground or an open/high resistance. If the circuit tests normal, replace the K27 fuel pump control module.
4. Vehicle OFF, connect a test lamp between the control circuit terminal 1 and the low reference circuit terminal 2.
5. Vehicle in Service Mode, command the G12 fuel pump ON with a scan tool. The test lamp should illuminate.
   If the test lamp does not illuminate, test the low reference circuit terminal 2 for a short-circuit to voltage or an open/high resistance. If the circuit tests normal, replace the K27 fuel pump control module.
6. If all circuits test normal, replace the G12 fuel pump.

Repair Instructions

Perform the Diagnostic Repair Verification after completing the repair.

- Fuel Tank Fuel Pump Module Replacement
- Control Module References for fuel pump control module replacement, programming and setup

&#169© Copyright Chevrolet. All rights reserved

DTC P025A

Diagnostic Instructions

- Perform the Diagnostic System Check - Vehicle prior to using this diagnostic procedure.
- Review Strategy Based Diagnosis for an overview of the diagnostic approach.
- Diagnostic Procedure Instructions provides an overview of each diagnostic category.

DTC Descriptor

DTC P025A: Fuel Pump Control Module Enable Circuit

Diagnostic Fault Information

Circuit	Short to Ground	Open or High Resistance	Short to Voltage	Signal Performance
FPCM Control	P025A	P025A	-	P025A

Circuit/System Description

The engine control module (ECM) supplies voltage to the fuel pump control module when the ECM detects that the ignition is on. The voltage from the ECM to the fuel pump control module remains active for 2 seconds, unless the engine is in crank or run. While this voltage is being received, the fuel pump control module supplies a varying voltage to the fuel tank pump module in order to maintain the desired fuel rail pressure.

Conditions for Running the DTC

The engine is running.

Conditions for Setting the DTC

The serial data message from the ECM to the fuel pump control module does not agree with the state of the control enable voltage signal supplied from the ECM to the fuel pump control module for more than 2 seconds.

Action Taken When the DTC Sets

DTC P025A is a Type A DTC.

Conditions for Clearing the DTC

DTC P025A is a Type A DTC.

Reference Information

Schematic Reference

Engine Controls Schematics

Connector End View Reference

Component Connector End Views

Description and Operation

Fuel System Description

Electrical Information Reference

- Circuit Testing
- Connector Repairs
- Testing for Intermittent Conditions and Poor Connections
- Wiring Repairs

DTC Type Reference

Powertrain Diagnostic Trouble Code (DTC) Type Definitions

Scan Tool Reference

Control Module References for scan tool information

Circuit/System Testing

1. Vehicle OFF, disconnect the harness connector at the K27 fuel pump control module.
2. Vehicle OFF, connect a test lamp between the control circuit terminal 20 and ground.
3. Vehicle in Service Mode, command the ECM fuel pump enable command ON and OFF with a scan tool. The test lamp should turn ON and OFF when changing between the commanded states.
   If the test lamp is always ON, test the control circuit for a short to voltage. If the circuit tests normal, replace the K20 ECM.
   If the test lamp is always OFF, test the control circuit for a short to ground or an open/high resistance. If the circuit tests normal, replace the K20 ECM.
4. If all circuits test normal, replace the K27 fuel pump control module.

Repair Instructions

Perform the Diagnostic Repair Verification after completing the repair.

Control Module References for ECM or fuel pump control module replacement, programming and setup

&#169© Copyright Chevrolet. All rights reserved

DTC P0300-P0304

Diagnostic Instructions

- Perform the Diagnostic System Check - Vehicle prior to using this diagnostic procedure.
- Review Strategy Based Diagnosis for an overview of the diagnostic approach.
- Diagnostic Procedure Instructions provides an overview of each diagnostic category.

DTC Descriptors

DTC P0300: Engine Misfire Detected

DTC P0301: Cylinder 1 Misfire Detected

DTC P0302: Cylinder 2 Misfire Detected

DTC P0303: Cylinder 3 Misfire Detected

DTC P0304: Cylinder 4 Misfire Detected

Circuit/System Description

The engine control module (ECM) uses information from the crankshaft position sensor in order to determine when an engine misfire is occurring and uses information from the camshaft position sensors in order to determine which cylinder is misfiring. By monitoring variations in the crankshaft rotation speed for each cylinder, the ECM is able to detect individual misfire events. If the ECM detects a misfire rate sufficient to cause emission levels to exceed mandated standards, DTC P0300 sets. Under certain driving conditions, a misfire rate can be high enough to cause the 3-way catalyst to overheat, possibly damaging the converter. The malfunction indicator lamp (MIL) will flash ON and OFF when converter overheating, damaging conditions are present and DTC P0300 is set. DTCs P0301-P0304 correspond to cylinders 1-4. If the ECM is able to determine that a specific cylinder is misfiring, the DTC for that cylinder will also set.

Conditions for Running the DTC

- DTCs P0016, P0068, P0101, P0102, P0103, P0106, P0107, P0108, P0111, P0112, P0113, P0117, P0118, P0119, P0122, P0123, P0222, P0223, P0335, P0336, P0606, P0651, P0697, P06A3, P16F3, P2101, P2122, P2123, P2127, P2135, and P2138 are not set.

- When DTC P0315 is set, the engine speed must be greater than 1,000 RPM.
- Engine run time is greater than 2 crankshaft revolutions.
- The engine speed is between 1,250 and 4,750 RPM.
- The ignition voltage is between 9 and 32 V.
- The engine coolant temperature (ECT) is between -7 and +125°C (+19 and +257°F).
- When the startup ECT is colder than -7°C (+19°F), this diagnostic will be delayed until the ECT is warmer than +21°C (+69°F).
- The fuel level is greater than 10 percent.
- The ECM is not in fuel shut-off, or decel fuel cut-off mode.
- DTCs P0300-P0304 run continuously when the above conditions are met.

Conditions for Setting the DTC

The ECM is detecting a crankshaft rotation speed variation indicating a misfire sufficient to cause emission or catalyst damaging levels to exceed mandated standards.

Action Taken When the DTC Sets

- DTCs P0300-P0304 are Type B DTCs.
- When the MIL is flashing the fuel injector may be disabled for the misfiring cylinder to protect the catalytic converter.
- Depending on the conditions that set the DTC, the engine may go into Open Loop.

Conditions for Clearing the DTC

DTCs P0300-P0304 are Type B DTCs.

Diagnostic Aids

- The Crankshaft Position System Variation Learn procedure may need to be performed. Refer to Crankshaft Position System Variation Learn .
- A high resistance condition on any fuel injector control circuit can cause an engine misfire P0300-P0304 DTC to set without setting a fuel injector circuit P0201-P0204 DTC.
- A high resistance condition on any ignition control (IC) circuit can cause an engine misfire P0300-P0304 DTC to set without setting an IC circuit P0351-P0354 DTC.
- Inspect the following for possible sources of vibration:
  - Water pump and belt
  - A damaged reluctor wheel

Reference Information

Schematic Reference

Engine Controls Schematics

Connector End View Reference

Component Connector End Views

Description and Operation

- Fuel System Description
- Hybrid Modes of Operation Description

Electrical Information Reference

- Circuit Testing
- Connector Repairs
- Testing for Intermittent Conditions and Poor Connections
- Wiring Repairs
- Powertrain Component Views

DTC Type Reference

Powertrain Diagnostic Trouble Code (DTC) Type Definitions

Scan Tool Reference

Control Module References for scan tool information

Special Tools

- J 26792 HEI Spark Tester.
- J 36012-A Ignition System Diagnosis Harness.

For equivalent regional tools, refer to Special Tools : Diagnostic Tools .

Circuit/System Verification

1. Engine running at normal operating temperature, verify there is no abnormal engine noise.
   If there is an abnormal engine noise, refer to Symptoms - Engine Mechanical .
2. Observe the DTC information with a scan tool. Verify that DTC P0201-P0204, P0315, P0335, P0336, P0351-P0354 are not set.

If any of the DTCs are set, refer to Diagnostic Trouble Code (DTC) List - Vehicle .

Note: A misfire may only occur when the engine is under a load. An engine load may be necessary to verify the condition.

3. Observe the scan tool Misfire Current Counter parameters. The Misfire Current Counters should not be incrementing.
4. Operate the vehicle within the conditions for running the DTC to verify the DTC does not reset. You may also operate the vehicle within the conditions that you observed from the freeze frame/failure records data.

Circuit/System Testing

Note: You must perform the Circuit/System Verification first.

1. Verify that the following conditions do not exist:
   - Vacuum hose splits, kinks, and incorrect connections
   - Engine vacuum leaks
   - Crankcase ventilation system vacuum leaks
   - Fuel pressure that is too low or too high--Refer to Fuel System Diagnosis .
   - Contaminated fuel--Refer to Alcohol/Contaminants-in-Fuel Diagnosis .
   - Restricted exhaust system--Refer to Restricted Exhaust .

   If you find any of the above conditions, repair as necessary.
2. Vehicle OFF, remove the K35 ignition coil module harness connector and remove the K35 ignition coil module.
3. Inspect the K35 ignition coil module spark plug boots for the following conditions:
   - Damage
   - Carbon tracking
   - Oil contamination
   - Water intrusion

   If you find any of the above conditions, repair as necessary.
4. Connect the harness connector to the K35 ignition coil module.

   Note: It may be necessary to secure the J 36012-A to the spark plug boots with electrical tape.

5. Install the J 36012-A to the spark plug boots.
6. Install the J 26792 between the spark plug boot of the misfiring cylinder and ground.
7. Connect the remaining wires to the appropriate cylinders.

   Note: An erratic or weak spark is considered a no spark condition.

8. Attempt to start the engine and observe the J 26792 . The spark tester should spark.

If there is no spark, refer to Electronic Ignition System Diagnosis .

9. Vehicle OFF, remove the spark plug from the misfiring cylinder. Verify the following conditions do not exist with the spark plug:
   - Gas, coolant, or oil fouled--Refer to Spark Plug Inspection .
   - Cracked, worn, incorrectly gapped--Refer to Ignition System Specifications .

   If there is a condition with the spark plug, replace the spark plug.
10. Exchange the suspected spark plug with another cylinder that is operating correctly.
11. Engine running, observe the scan tool Misfire Current Counters. The misfire should not follow the spark plug exchange.
    If the misfire follows the spark plug, replace the spark plug.
12. If all conditions test normal, test or inspect for the following:
    - A lean or rich fuel injector--Refer to Fuel Injector Solenoid Coil Test .
    - An engine mechanical condition--Refer to Symptoms - Engine Mechanical .

Repair Instructions

- Ignition Coil Replacement
- Spark Plug Replacement

Repair Verification

Perform the Diagnostic Repair Verification after completing the diagnostic procedure.

1. Install any components that have been removed or replaced during diagnosis.
2. Perform any adjustments, programming or setup procedures that are required when a component is removed or replaced.
3. Clear the DTCs with a scan tool.
4. Vehicle OFF for 60 s.
5. Engine running, observe the Misfire Current Counters with a scan tool. The Misfire Current Counters should not be incrementing.
   If the Misfire Current Counters are incrementing, a misfire still exists.
6. If the repair was related to a DTC, duplicate the Conditions for Running the DTC and use the freeze frame/failure records, if applicable, in order to verify the DTC does not reset. If the DTC resets or another DTC is present, refer to Diagnostic Trouble Code (DTC) List - Vehicle and perform the appropriate diagnostic procedure.
7. To verify that the performance of the catalytic converter has not been affected by the condition that set this DTC, perform the Repair Verification for DTC P0420. Refer to DTC P0420 .

&#169© Copyright Chevrolet. All rights reserved

DTC P0315

Diagnostic Instructions

- Perform the Diagnostic System Check - Vehicle prior to using this diagnostic procedure.
- Review Strategy Based Diagnosis for an overview of the diagnostic approach.
- Diagnostic Procedure Instructions provides an overview of each diagnostic category.

DTC Descriptor

DTC P0315: Crankshaft Position System Variation Not Learned

Circuit/System Description

The crankshaft position system variation learn feature is used to calculate reference period errors caused by slight build tolerance variations in the crankshaft position sensor, crankshaft, and crankshaft position sensor position. The calculated error allows the engine control module (ECM) to accurately compensate for reference period variations. This enhances the ability of the ECM to detect misfire events over a wide range of engine speeds and load conditions. The ECM stores the crankshaft position system variation learn values after a learn procedure has been performed. If the actual crankshaft position system variation learn values are not stored within the crankshaft position compensating value look up table, then DTC P0300 may set. If the crankshaft position variation system learn values are not stored in the ECM memory, or a proper ECM power down does not occur after completing the Crankshaft Position System Variation Learn procedure, then DTC P0315 sets.

Conditions for Running the DTC

The diagnostic runs continuously when the vehicle is ON.

Conditions for Setting the DTC

The ECM detects that the crankshaft position system variation learn values are not stored in memory.

Action Taken When the DTC Sets

DTC P0315 is a Type A code.

Conditions for Clearing the MIL/DTC

DTC P0315 is a Type A code.

Diagnostic Aids

- To ensure the battery pack has sufficient state of charge to get crankshaft position variation learn values with the lowest engine noise present, this procedure should be perform when the Hybrid/EV Battery Pack Charge Remaining parameter is at least 40%.
- DTC P0315 may set after the programming of other vehicle modules has been performed.

Reference Information

Schematic Reference

Engine Controls Schematics

Connector End View Reference

Component Connector End Views

Description and Operation

Hybrid Modes of Operation Description

Electrical Information Reference

- Circuit Testing
- Connector Repairs
- Testing for Intermittent Conditions and Poor Connections
- Wiring Repairs

DTC Type Reference

Powertrain Diagnostic Trouble Code (DTC) Type Definitions

Scan Tool Reference

Control Module References for scan tool information

Circuit/System Verification

Note: The Crankshaft Position System Variation Learn procedure may have to be repeated up to 5 times before the procedure is successful.

1. Perform the Crankshaft Position System Variation Learn procedure. Refer to Crankshaft Position System Variation Learn .
2. If the Crankshaft Position System Variation Learn procedure cannot be performed successfully, inspect for the following conditions:
   - The Service Mode is active, until the battery is discharged
   - Interference in the signal circuit of the B26 crankshaft position sensor
   - An ECM power disconnect, with Vehicle in Service Mode, that may have erased the crankshaft position system variation values and set DTC P0315
   - Any debris between the crankshaft position sensor and the reluctor wheel
   - A damaged or misaligned reluctor wheel
   - Any worn crankshaft main bearings
   - Excessive crankshaft runout
   - A damaged crankshaft

   If the ECM is still unable to complete the learn procedure, replace the K20 ECM.

Repair Instructions

Perform the Diagnostic Repair Verification after completing the diagnostic procedure.

Control Module References for ECM replacement, setup, and programming

&#169© Copyright Chevrolet. All rights reserved

DTC P0324, P0326, or P06B6

Diagnostic Instructions

- Perform the Diagnostic System Check - Vehicle prior to using this diagnostic procedure.
- Review Strategy Based Diagnosis for an overview of the diagnostic approach.
- Diagnostic Procedure Instructions provides an overview of each diagnostic category.

DTC Descriptors

DTC P0324: Knock Sensor System Performance

DTC P0326: Knock Sensor Performance

DTC P06B6: Control Module Knock Sensor Processor Performance

Diagnostic Fault Information

Circuit	Short to Ground	Open/High Resistance	Short to Voltage	Signal Performance
Knock Sensor Signal	P0327	P0325	P0328	P0326
Knock Sensor Low Reference	P0327	P0325, P06B6	P0328	P0326

Circuit/System Description

The knock sensor enables the engine control module (ECM) to control the ignition timing for the best possible performance while protecting the engine from potentially damaging levels of detonation. The knock sensor produces an alternating current (AC) voltage signal that varies depending on the vibration level during engine operation. The ECM adjusts the spark timing based on the amplitude and the frequency of the knock sensor signal. The ECM receives the knock sensor signal through 2 isolated circuits. The ECM learns a minimum knock sensor noise level for all of the engine speed ranges. The ECM monitors for a normal knock sensor signal. The ECM monitors the internal knock sensor processor by verifying a 20 KHz signal generated on the signal circuit is detected on the sensor low reference circuit.

Conditions for Running the DTC

P0324 and P0326-Condition 1

- Engine speed is between 600 and 8,500 RPM.
- Engine is running for greater than 2 s.
- The engine coolant temperature (ECT) is warmer than -40°C (-40°F).
- The inlet air temperature (IAT) is warmer than -40°C (-40°F).
- The DTCs run continuously when the above conditions are met.

P0326-Condition 2

- Engine speed is greater than 2,000 RPM.
- Engine is running for greater than 1 s.
- The ECT is warmer than -40°C (-40°F).
- The IAT is warmer than -40°C (-40°F).
- The DTC runs continuously when the above conditions are met.

P06B6

- Engine speed is between 600 and 5,000 RPM.
- Engine is running greater than 5 s.
- The DTC runs continuously when the above conditions are met.

Conditions for Setting the DTC

P0324

The ECM detects that the knock sensor signal indicates an excessive engine knock or noise is present in at least a single cylinder.

P0326

- The ECM detects that the knock sensor signal indicates the sensor harness is connected, but the sensor is not properly bolted to the engine.
  OR
- The ECM detects that the knock sensor signal indicates an excessive engine knock is present.

P06B6

The ECM has detected an internal knock sensor processor fault.

Action Taken When the DTC Sets

- DTCs P0324, P0326, and P06B6 are Type B DTCs.
- The ignition timing is retarded to reduce the potential of engine damaging spark knock.

Conditions for Clearing the DTC

DTCs P0324, P0326, and P06B6 are Type B DTCs.

Reference Information

Schematic Reference

Engine Controls Schematics

Connector End View Reference

Component Connector End Views

Description and Operation

Hybrid Modes of Operation Description

Electrical Information Reference

- Circuit Testing
- Connector Repairs
- Testing for Intermittent Conditions and Poor Connections
- Wiring Repairs

DTC Type Reference

Powertrain Diagnostic Trouble Code (DTC) Type Definitions

Scan Tool Reference

Control Module References for scan tool information

Circuit/System Verification

1. Engine running, observe the DTC information with a scan tool. Verify DTC P0325, P0327, P0328, and P06B6 is not set.
   If DTC P0325, P0327, or P0328 is set with P06B6, refer to DTC P0325, P0327, or P0328 for further diagnosis.
   If DTC P06B6 is set, and no external knock sensor circuit issues exist, replace the K20 ECM.
2. Vehicle OFF, inspect for the following:
   - The B68 knock sensor for physical damage. A sensor that is dropped or damaged may cause a DTC to set
   - The sensor for proper installation. A sensor that is loose or not at the correct torque may cause a DTC to set. Refer to Fastener Tightening Specifications .
   - The sensor mounting surface for burrs, casting flash, and foreign material
   - The sensor must be clear of hoses, brackets, and engine electrical wiring
   - Loose brackets
   - Water pump and belt
   - An engine mechanical condition--Refer to Symptoms - Engine Mechanical

   If a condition is found, repair as necessary.
3. If there is no mechanical condition, test or replace the B68 knock sensor.
4. Operate the vehicle within the conditions for running the DTC to verify the DTC does not reset. You may also operate the vehicle within the conditions that you observed from the freeze frame/failure Records data.

Repair Instructions

Perform the Diagnostic Repair Verification after completing the diagnostic procedure.

- Knock Sensor Replacement
- Control Module References for ECM replacement, setup, and programming

&#169© Copyright Chevrolet. All rights reserved

DTC P0325, P0327, or P0328

Diagnostic Instructions

- Perform the Diagnostic System Check - Vehicle prior to using this diagnostic procedure.
- Review Strategy Based Diagnosis for an overview of the diagnostic approach.
- Diagnostic Procedure Instructions provides an overview of each diagnostic category.

DTC Descriptors

DTC P0325: Knock Sensor Circuit

DTC P0327: Knock Sensor Circuit Low Voltage

DTC P0328: Knock Sensor Circuit High Voltage

Diagnostic Fault Information

Circuit	Short to Ground	Open/High Resistance	Short to Voltage	Signal Performance
Knock Sensor Signal	P0327	P0325	P0328	P0326
Knock Sensor Low Reference	P0327	P0325, P06B6	P0328	P0326

Circuit/System Description

The knock sensor enables the engine control module (ECM) to control the ignition timing for the best possible performance while protecting the engine from potentially damaging levels of detonation. The knock sensor produces an alternating current (AC) voltage signal that varies depending on the vibration level during engine operation. The ECM adjusts the spark timing based on the amplitude and the frequency of the knock sensor signal. The ECM receives the knock sensor signal through 2 isolated circuits. The ECM learns a minimum knock sensor noise level for all of the engine speed ranges. The ECM monitors for a normal knock sensor signal. The ECM monitors the internal knock sensor processor by verifying a 20 KHz signal generated on the signal circuit is detected on the sensor low reference circuit.

Conditions for Running the DTC

P0325

- Engine speed is between 600 and 8,500 RPM.
- Engine is running at least 5 s.
- The ECT is warmer than -40°C (-40°F).
- The IAT is warmer than -40°C (-40°F).
- The DTC runs continuously when the above conditions are met.

P0327 and P0328

- Engine speed is less than 8,500 RPM.
- The DTCs run continuously when the above condition is met.

Conditions for Setting the DTC

P0325

The ECM detects that a knock sensor signal circuit is open.

P0327

The ECM detects that a knock sensor signal circuit is shorted to ground.

P0328

The ECM detects that a knock sensor signal circuit is shorted to voltage.

Action Taken When the DTC Sets

- DTCs P0325, P0327, and P0328 are Type B DTCs.
- The ignition timing is retarded to reduce the potential of engine damaging spark knock.

Conditions for Clearing the DTC

DTCs P0325, P0327, and P0328 are Type B DTCs.

Diagnostic Aids

- Inspect the knock sensor for physical damage. A sensor that is dropped or damaged may cause a DTC to set.
- The sensor mounting surface must be free of burrs, casting flash, and foreign material.
- The sensor must be clear of hoses, brackets, and engine electrical wiring.

Reference Information

Schematic Reference

Engine Controls Schematics

Connector End View Reference

Component Connector End Views

Description and Operation

Hybrid Modes of Operation Description

Electrical Information Reference

- Testing for Intermittent Conditions and Poor Connections
- Circuit Testing
- Wiring Repairs
- Connector Repairs

DTC Type Reference

Powertrain Diagnostic Trouble Code (DTC) Type Definitions

Scan Tool Reference

Control Module References for scan tool information

Circuit/System Verification

1. Engine running, observe the DTC information with a scan tool. DTC P0325, P0327, or P0328 should not set.
2. Move the related harnesses and connectors for the knock sensor circuits while observing the scan tool parameters listed below. The parameters should display NO.
   - Cylinder 1 Knock Detected

- Cylinder 2 Knock Detected
- Cylinder 3 Knock Detected
- Cylinder 4 Knock Detected

If the parameters change, repair the wiring or the harness connectors.

3. Observe the DTC information with a scan tool. DTC P0325, P0327, or P0328 should not set.
4. Operate the vehicle within the conditions for running the DTC to verify the DTC does not reset. You may also operate the vehicle within the conditions that you observed from the freeze frame/failure records data.

Circuit/System Testing

1. Verify the B68 knock sensor is properly tightened, refer to Fastener Tightening Specifications .
   If not the specified value, correct the condition as appropriate.
2. Vehicle OFF, disconnect the harness connector at the B68 knock sensor.
3. Vehicle in Service Mode, measure for 1-4 V between each of the following circuits and ground on the K20 ECM side of the harness connector:
   - The signal circuit, terminal 1
   - The low reference circuit, terminal 2

   If less than the specified range, test the circuits for a short to ground or an open/high resistance. If the circuits test normal, replace the K20 ECM.
   If greater than the specified range, test the circuits for a short to voltage. If the circuits test normal, replace the K20 ECM.
4. If all circuits test normal, replace the B68 knock sensor.

Repair Instructions

Perform the Diagnostic Repair Verification after completing the diagnostic procedure.

- Knock Sensor Replacement
- Control Module References for ECM replacement, programming and setup.

&#169© Copyright Chevrolet. All rights reserved

DTC P0335 or P0336

Diagnostic Instructions

- Perform the Diagnostic System Check - Vehicle prior to using this diagnostic procedure.
- Review Strategy Based Diagnosis for an overview of the diagnostic approach.
- Diagnostic Procedure Instructions provide an overview of each diagnostic category.

DTC Descriptors

DTC P0335: Crankshaft Position Sensor Circuit

DTC P0336: Crankshaft Position Sensor Performance

Diagnostic Fault Information

Circuit	Short to Ground	Open/High Resistance	Short to Voltage	Signal Performance
Crankshaft Position Sensor 5 V Reference	P0172, P0335, P0606 , P0651	P0335	P0172, P0335, P0606, P0651	P0145A, P0336
Crankshaft Position Sensor Signal	P0172, P0335	P0172, P0335, P0606	P0172, P0335	P0336
Low Reference	-	P0172, P0335, P0606	-	P0336

Circuit/System Description

The crankshaft position sensor detects crankshaft speed and position. The crankshaft position sensor produces an alternating current (AC) voltage of different amplitude and frequency. The frequency depends on the velocity of the crankshaft, and the AC voltage output depends on the crankshaft position and battery voltage. The crankshaft position sensor works in conjunction with a 58 tooth reluctor wheel attached to the crankshaft. The engine control module (ECM) can synchronise the ignition timing, fuel injector timing, and spark knock control based on the crankshaft position sensor and the camshaft position sensor inputs. The crankshaft position sensor is also used to detect misfire.

Conditions for Running the DTC

P0335 Condition 1

- DTCs P0101, P0102 and P0103 are not set.
- The engine is attempting to start and the camshaft position sensor pulses are being received.
- Calculated Air Flow is greater than 3.0 g/s.

Condition 2

- DTC P0651 is not active.
- The engine is running.

Condition 3

- DTCs P0365, P0366, P0641, and P0651, are not set.
- The engine is running or the engine is attempting to start.

P0336 Condition 1

- DTCs P0335 or P0651 are not set.
- Calculated Air Flow is greater than 3.0 g/s.
- Engine speed is greater than 450 RPM.

Condition 2

- DTC P0651 is not set.
- The engine is running.

Condition 3

- DTCs P0101, P0102, and P0103 are not set.
- Engine is attempting to start and the camshaft position sensor pulses are being received.
- Calculated Air Flow is greater than 3.0 g/s.

Condition 4

- DTCs P0365, P0366, P0641, and P0651 are not set.
- The engine is running or the engine is attempting to start.

The DTCs run continuously once the above conditions are met.

Conditions for Setting the DTC

P0335

DTC P0335 sets if one of the conditions listed below occur:

- The ECM detects that the engine has been attempting to start for greater than 4 s without a crankshaft position sensor pulse.
- Engine running and the ECM does not detect a crankshaft position sensor pulse for 0.7 s.

P0336

DTC P0336 sets if one of the conditions listed below occur:

- The ECM detects that the engine has been attempting to start for greater than 1.5 s without detecting the synchronisation gap on the reluctor wheel.
- The ECM detects that the engine is running, but greater than 10 crankshaft resynchronisation have occurred within 10 s.
- The ECM detects that the engine is running for greater than 0.4 s without detecting the synchronisation gap on the reluctor wheel.
- The ECM detects that the engine is running, but receives less than 51 or greater than 65 crankshaft position sensor pulses, during one engine revolution.

Action Taken When the DTC Sets

- DTCs P0335 and P0336 are Type B DTCs.
- The Driver Information Centre displays Engine not available, Service Soon and Propulsion power is reduced.

Conditions for Clearing the DTC

DTCs P0335 and P0336 are Type B DTCs.

Diagnostic Aids

The following conditions may also set the DTCs:

- Physical damage to the crankshaft position sensor or the reluctor wheel
- Excessive play or looseness of the crankshaft position sensor or the reluctor wheel
- Improper installation of the crankshaft position sensor or the reluctor wheel
- Foreign material passing between the crankshaft position sensor and the reluctor wheel
- Excessive air gap between the crankshaft position sensor and the reluctor wheel
- The ECM uses the camshaft position sensors to determine engine speed and position when there is a crankshaft position sensor condition.

Reference Information

Schematic Reference

Engine Controls Schematics

Connector End View Reference

Component Connector End Views

Description and Operation

- Electronic Ignition System Description
- Hybrid Modes of Operation Description

Electrical Information Reference

- Circuit Testing
- Connector Repairs
- Testing for Intermittent Conditions and Poor Connections
- Wiring Repairs

DTC Type Reference

Powertrain Diagnostic Trouble Code (DTC) Type Definitions

Scan Tool Reference

Control Module References for scan tool information

Circuit/System Verification

Note: If you were sent here from Engine Cranks But Does Not Run, proceed to Circuit/System Testing.

1. Vehicle in Service Mode, observe the DTC information with a scan tool. Verify DTCs P0651, P2618, or P2619 are not set.
   If a DTC is set, refer to Diagnostic Trouble Code (DTC) List - Vehicle for further diagnosis.
2. Attempt to start the engine. Observe the scan tool Engine Speed parameter. The scan tool should indicate an engine speed greater than 0 RPM.
3. Attempt to start the engine. Observe the scan tool HPCM Engine Speed parameter. The scan tool should indicate an engine speed greater than 0 RPM.
   If the above condition exists, refer to DTCs P2618 or P2619 for further diagnosis.

4. Move the related harnesses/connectors of the B26 crankshaft position sensor and verify the engine does not stumble, stall, or change engine speed.
   If the above condition exists, repair the harness/connectors as necessary.
5. Attempt to start the engine. Observe the DTC information with a scan tool. DTC P0335 and P0336 should not set.
6. Operate the vehicle within the conditions for running the DTC to verify the DTC does not reset. You may also operate the vehicle within the conditions that you observed from the freeze frame/failure records data.

Circuit/System Testing

1. Vehicle OFF. Disconnect the harness connector at the B26 crankshaft position sensor.
2. Vehicle OFF, all systems OFF. It may take 2 minutes for all vehicle systems to power down. Test for less than 5 Ω between the low reference circuit terminal 2 and ground.
   If greater than the specified range, test the circuit for an open/high resistance. If the circuit tests normal, replace the K20 ECM.
3. Vehicle in Service Mode, test for 4.8-5.2 V between the 5 V reference circuit terminal 1 and ground.
   If less than the specified range, test the 5 V reference circuit for a short to ground or an open/high resistance. If the circuit tests normal, replace the K20 ECM.
   If greater than the specified range, test the 5 V reference circuit for a short to voltage. If the circuit tests normal, replace the K20 ECM.
4. Test for 4.8-5.2 V between the signal circuit terminal 3 and ground.
   If less than the specified range, test the signal circuit for a short to ground or an open/high resistance. If the circuit tests normal, replace the K20 ECM.
   If greater than the specified range, test the signal circuit for a short to voltage. If the circuit tests normal, replace the K20 ECM.
5. Vehicle OFF, connect a 3 A fused jumper wire to the signal circuit terminal 3.
6. Vehicle ON, momentarily touch the end of the fused jumper wire to ground while monitoring the scan tool Crankshaft Position Sensor Active Counter. The parameter should increment.
   If the parameter does not increment, replace the K20 ECM.
7. If all circuits test normal, replace the B26 Crankshaft Position Sensor.

Repair Instructions

Perform the Diagnostic Repair Verification after completing the diagnostic procedure.

- Crankshaft Position Sensor Replacement
- Control Module References for engine control module replacement, setup, and programming

&#169© Copyright Chevrolet. All rights reserved

DTC P0340 or P0365

Diagnostic Instructions

- Perform the Diagnostic System Check - Vehicle prior to using this diagnostic procedure.
- Review Strategy Based Diagnosis for an overview of the diagnostic approach.
- Diagnostic Procedure Instructions provide an overview of each diagnostic category.

DTC Descriptors

DTC P0340: Intake Camshaft Position Sensor Circuit

DTC P0365: Exhaust Camshaft Position Sensor Circuit

Diagnostic Fault Information

Circuit	Short to Ground	Open/High Resistance	Short to Voltage	Signal Performance
Intake Camshaft Position Sensor 5 V Reference Circuit	P0452, P0532, P0641	P0340	P0453, P0533, P0641,	-
Exhaust Camshaft Position Sensor 5 V Reference Circuit	P0452, P0532, P0641	P0365	P0453, P0533, P0641,	-
Intake camshaft position sensor signal circuit	P0340	P0340	P0340	P0341
Exhaust Camshaft Position Sensor Signal Circuit	P0365	P0365	P0365	P0366
Inlet Camshaft Position Sensor Low Reference	-	P0340	P0340	-
Exhaust Camshaft Position Sensor Low Reference	-	P0365	P0365	-

Circuit/System Description

Each camshaft is equipped with a camshaft position sensor that the engine control module (ECM) monitors. The camshaft position sensor is a hall effect switch that works in conjunction with a 4X reluctor wheel. The reluctor wheels are mounted to the camshaft position actuators that are mounted to the end of the camshafts. The ECM uses the camshaft position sensor signals in order to determine the position of the camshafts. The ECM supplies 5 V to the camshaft position sensors on the 5 V reference circuits and supplies a ground on the low reference circuits. The camshaft position sensors provide a signal to the ECM on the signal circuits.

Conditions for Running the DTC

P0340 Condition 1

- DTCs P0101, P0102, and P0103 are not set.
- The engine is attempting to start.
- Calculated Air Flow is greater than 3.0 g/s.

Condition 2

- Engine is running.
- DTC P0641 is not set.

Condition 3

- Engine is attempting to start.
- DTCs P0335, P0336, P0641 or P0651, are not set.

Condition 4

- Receiving crankshaft pulses.
- DTCs P0335, P0336, P0641 or P0651, are not set.

P0365 Condition 1

- Engine is attempting to start.
- DTCs P0101, P0102, or P0103 are not set.
- Calculated Air Flow is greater than 3.0 g/s.

Condition 2

- Engine is running.
- DTC P0641 is not set.

Condition 3

- Engine is attempting to start.
- DTCs P0335, P0336, P0641 or P0651, are not set.

Condition 4

- Crankshaft is synchronised to camshaft.
- DTCs P0335, P0336, P0641 or P0651, are not set.

The DTCs run continuously once the above conditions are met.

Conditions for Setting the DTC

Condition 1

- The time since the last camshaft position pulse is greater than 5.5 s.
- The ECM detects that the engine is attempting to start for greater than 4 s, without a camshaft position sensor pulse.

Condition 2

Fewer than 4 camshaft pulses have been received in greater than 3 s.

Condition 3

No camshaft sensor pulses have been received during the first engine cycle.

Condition 4

The number of camshaft pulses received during 100 engine cycles equals 0.

Action Taken When the DTC Sets

- DTCs P0340, and P0365 are Type B DTCs.
- The camshaft position actuator is commanded to the park position.

Conditions for Clearing the DTC

DTCs P0340, and P0365 are Type B DTCs.

Reference Information

Schematic Reference

Engine Controls Schematics

Connector End View Reference

Component Connector End Views

Description and Operation

Hybrid Modes of Operation Description

Electrical Information Reference

- Circuit Testing
- Connector Repairs
- Testing for Intermittent Conditions and Poor Connections
- Wiring Repairs

DTC Type Reference

Powertrain Diagnostic Trouble Code (DTC) Type Definitions

Scan Tool Reference

Control Module References for scan tool information

Circuit/System Verification

1. Vehicle in Service Mode, observe the DTC information with a scan tool. DTC P0641 should not be set.
   If DTC P0641 is set, refer to DTC P0641, P0651, P0697, or P06A3 : ECM .
2. Engine running, observe the scan tool Inlet or Exhaust Camshaft Position Active Counter parameters. The parameters should be incrementing.
3. Observe the DTC information with a scan tool. DTC P0340 or P0365 should not set.
4. Operate the vehicle within the conditions for running the DTC to verify the DTC does not reset. You may also operate the vehicle within the conditions that you observed from the freeze frame/failure records data.

Circuit/System Testing

1. Vehicle OFF. Disconnect the harness connector at the appropriate B23 camshaft position sensor.
2. Vehicle OFF, all systems OFF. It may take 2 minutes for all Vehicle systems to power down. Test for less than 5 Ω between the low reference circuit terminal 2 and

ground.
If greater than the specified range, test the low reference circuit for an open/high resistance. If the circuit tests normal, replace the K20 ECM.

3. Vehicle in Service Mode, test for 4.8-5.2 V between the 5 V reference circuit terminal 1 and ground.
   If less than the specified range, test the 5 V reference circuit for a short to ground or an open/high resistance. If the circuit tests normal, replace the K20 ECM.
   If greater than the specified range, test the 5 V reference circuit for a short to voltage. If the circuit tests normal, replace the K20 ECM.
4. Test for 4.8-5.2 V between the signal circuit terminal 3 and ground.
   If less than the specified range, test the signal circuit for a short to ground or an open/high resistance. If the circuit tests normal, replace the K20 ECM.
   If greater than the specified range, test the signal circuit for a short to voltage or an open/high resistance. If the circuit tests normal, replace the K20 ECM.
5. If all circuits test normal, test or replace the B23 Camshaft Position Sensor.

Repair Instructions

Perform the Diagnostic Repair Verification after completing the diagnostic procedure.

- Camshaft Position Sensor Replacement : Intake → Exhaust
- Control Module References for Engine Control Module replacement, setup, and programming

&#169© Copyright Chevrolet. All rights reserved

DTC P0341 or P0366

Diagnostic Instructions

- Perform the Diagnostic System Check - Vehicle prior to using this diagnostic procedure.
- Review Strategy Based Diagnosis for an overview of the diagnostic approach.
- Diagnostic Procedure Instructions provide an overview of each diagnostic category.

DTC Descriptors

DTC P0341: Intake Camshaft Position Sensor Performance

DTC P0366: Exhaust Camshaft Position Sensor Performance

Diagnostic Fault Information

Circuit	Short to Ground	Open/High Resistance	Short to Voltage	Signal Performance
Intake Camshaft Position Sensor 5 V Reference	P0452, P0532, P0641	P0340, P0365	P0453, P0533, P0641,	-
Exhaust Camshaft Position Sensor 5 V Reference	P0452, P0532, P0641	P0365	P0453, P0533, P0641,	-
Inlet Camshaft Position Sensor Signal	P0340	P0340	P0340	P0341
Exhaust Camshaft Position Sensor Signal	P0365	P0365	P0365	P0366
Inlet Camshaft Position Sensor Low Reference	-	P0340	P0340	-
Exhaust Camshaft Position Sensor Low Reference	-	P0365	P0365	-

Circuit/System Description

Each camshaft is equipped with a camshaft position sensor that the engine control module (ECM) monitors. The camshaft position sensor is a hall effect switch that works in conjunction with a 4X reluctor wheel. The reluctor wheels are mounted to the camshaft position actuators that are mounted to the end of the camshafts. The ECM uses the camshaft position sensor signals in order to determine the position of the camshafts. The ECM supplies 5 V to the camshaft position sensors on the 5 V reference circuits and supplies a ground on the low reference circuits. The camshaft position sensors provide a signal to the ECM on the signal circuits.

Conditions for Running the DTC

Condition 1

- DTCs P0335, P0336, P0641, or P0651, are not set.
- Engine is attempting to start.

Condition 2

- DTCs P0335, P0336, P0641, or P0651, are not set.
- Crankshaft is synchronised to the camshaft.

Conditions for Setting the DTC

Condition 1

The ECM detects a signal from the camshaft position sensor, but the number of pulses are less than 4 or greater than 6 of what is expected for one crankshaft revolution.

Condition 2

The number of camshaft pulses received during 100 engine cycles is less than 398 or greater than 402.

Action Taken When the DTC Sets

DTCs P0341 and P0366 are Type B DTCs.

Conditions for Clearing the DTC

DTCs P0341 and P0366 are Type B DTCs.

Diagnostic Aids

A high resistance condition on the camshaft position sensor circuits may cause a DTC to set.

Reference Information

Schematic Reference

Engine Controls Schematics

Connector End View Reference

Component Connector End Views

Description and Operation

Hybrid Modes of Operation Description

Electrical Information Reference

- Circuit Testing
- Connector Repairs
- Testing for Intermittent Conditions and Poor Connections
- Wiring Repairs

DTC Type Reference

Powertrain Diagnostic Trouble Code (DTC) Type Definitions

Scan Tool Reference

Control Module References for scan tool information

Circuit/System Verification

1. Vehicle in Service Mode, observe the DTC information with a scan tool. DTC P0641 should not be set.
   If DTC P0641 is set, refer to DTC P0641, P0651, P0697, or P06A3 : ECM .
2. Engine running, observe the scan tool Inlet or Exhaust Camshaft Position Active Counter parameter. The parameters should be incrementing.
3. Observe the DTC information with a scan tool. DTC P0341 or P0366 should not set.
4. Operate the vehicle within the conditions for running the DTC to verify the DTC does not reset. You may also operate the vehicle within the conditions that you observed from the freeze frame/failure records data.

Circuit/System Testing

1. Vehicle OFF, inspect the appropriate B23 camshaft position sensor for the correct installation.
   If the B23 camshaft position sensor is loose, inspect the sensor and the O-ring for damage, and replace as necessary.
2. Disconnect the harness connector at the appropriate B23 camshaft position sensor.

3. Vehicle OFF, all systems OFF. It may take 2 minutes for all vehicle systems to power down. Test for less than 5 Ω between the low reference circuit terminal 2 and ground.
   If greater than the specified range, test the low reference circuit for an open/high resistance. If the circuit tests normal, replace the K20 ECM.
4. Vehicle in Service Mode, test for 4.8-5.2 V between the 5 V reference circuit terminal 1 and ground.
   If less than the specified range, test the 5 V reference circuit for a short to ground, or an open/high resistance. If the circuit tests normal, replace the K20 ECM.
   If greater than the specified range, test the 5 V reference circuit for a short to voltage. If the circuit tests normal, replace the K20 ECM.
5. Test for 4.8-5.2 V between the signal circuit terminal 3 and ground.
   If less than the specified range, test the signal circuit for a short to ground, or an open/high resistance. If the circuit tests normal, replace the K20 ECM.
   If greater than the specified range, test the signal circuit for a short to voltage. If the circuit tests normal, replace the K20 ECM.
6. Vehicle OFF, connect a 3 A fused jumper wire to the signal circuit terminal 3.
7. Vehicle in Service Mode, momentarily touch the end of the fused jumper wire to ground while monitoring the scan tool parameters listed below. The parameters should increment.
   - Inlet Camshaft Position Active Counter
   - Exhaust Camshaft Position Active Counter
   - If the parameters do not increment, replace the K20 ECM.
8. Inspect the engine for the following conditions:
   - Physical damage to the B23 camshaft position sensor or the reluctor wheel
   - Excessive play or looseness of the B23 camshaft position sensor or the reluctor wheel
   - Excessive camshaft end play
   - Improper installation of the B23 camshaft position sensor or the reluctor wheel
   - Foreign material passing between the B23 camshaft position sensor and the reluctor wheel
   - The timing chain and tensioner for wear or damage

     If any of the above conditions exists, repair as necessary.
9. If all circuits test normal, replace the B23 camshaft position sensor.

Repair Instructions

Perform the Diagnostic Repair Verification after completing the diagnostic procedure.

- Camshaft Position Sensor Replacement : Intake → Exhaust
- Camshaft Timing Chain Replacement
- Control Module References for Engine Control Module replacement, setup, and programming

&#169© Copyright Chevrolet. All rights reserved

DTC P0351-P0354

Diagnostic Instructions

- Perform the Diagnostic System Check - Vehicle prior to using this diagnostic procedure.
- Review Strategy Based Diagnosis for an overview of the diagnostic approach.
- Diagnostic Procedure Instructions provide an overview of each diagnostic category.

DTC Descriptor

DTC P0351: Ignition Coil 1 Control Circuit

DTC P0352: Ignition Coil 2 Control Circuit

DTC P0353: Ignition Coil 3 Control Circuit

DTC P0354: Ignition Coil 4 Control Circuit

Diagnostic Fault Information

Circuit	Short to Ground	Open/High Resistance	Short to Voltage	Signal Performance
Ignition Voltage	*	P0AB9, P0AC4, P16E0**	-	-
Ignition Coil 1 Control Circuit	P0300, P0351	P0300, P0351	P0300, P0351	-
Ignition Coil 2 Control Circuit	P0300, P0352	P0300, P0352	P0300, P0352	-
Ignition Coil 3 Control Circuit	P0300, P0353	P0300, P0353	P0300, P0353	-
Ignition Coil 4 Control Circuit	P0300, P0354	P0300, P0354	P0300, P0354	-
Ignition Coil Module Low Reference	-	-	-	-
Ignition Coil Ground Circuit	-	-	-	-
*The engine cranks but does not run and opens the fuse that supplies voltage to the ignition coil. **The engine cranks but does not run.				

Circuit/System Description

Ignition voltage is supplied to the ignition coil. The engine control module (ECM) provides an ground for the ignition coil control circuits. When the ECM removes the ground path of the ignition primary coil, the magnetic field produced by the coil collapses. The collapsing magnetic field produces a voltage in the secondary coil which ignites the spark plugs. The sequencing and timing are controlled by the ECM.

Conditions for Running the DTC

- The engine is running.
- The ignition voltage is greater than 5 V.
- The DTC runs continuously once the above condition is met.

Conditions for Setting the DTC

The ECM detects that the commanded state of the driver and the actual state of the control circuit do not match for greater than 5 s.

Action Taken When the DTC Sets

DTCs P0351, P0352, P0353 and P0354 are Type B DTCs.

Conditions for Clearing the DTC

DTCs P0351, P0352, P0353 and P0354 are Type B DTCs.

Diagnostic Aids

If the condition is intermittent, moving the related harnesses and connectors, with the engine running, while monitoring the appropriate scan tool Misfire Current Cylinder parameter and the appropriate Ignition Coil Control Circuit Status parameter this may help isolate the condition.

Reference Information

Schematic Reference

Engine Controls Schematics

Connector End View Reference

Component Connector End Views

Description and Operation

- Electronic Ignition System Description
- Hybrid Modes of Operation Description

Electrical Information Reference

- Circuit Testing
- Connector Repairs
- Testing for Intermittent Conditions and Poor Connections
- Wiring Repairs

DTC Type Reference

Powertrain Diagnostic Trouble Code (DTC) Type Definitions

Scan Tool Reference

Control Module References for scan tool information

Circuit/System Verification

1. Start the engine.
2. Observe the scan tool Cylinder 1-4 Current Misfire Counter parameters. The counters should not be incrementing.
3. Observe the appropriate Ignition Coil Control Circuit Status parameter should read OK.
4. Operate the vehicle within the conditions for running the DTC to verify the DTC does not reset. You may also operate the vehicle within the conditions that you observed from the freeze frame/failure records data.

Circuit/System Testing

1. Vehicle OFF, disconnect the harness connector at the K35 ignition coil module.
2. Vehicle in Service Mode, verify that a test lamp does not illuminate between the appropriate control circuit listed below and ground.
   - Ignition coil 1 control terminal D
   - Ignition coil 2 control terminal E
   - Ignition coil 3 control terminal F
   - Ignition coil 4 control terminal G

   If the test lamp illuminates, test the control circuit for a short to voltage. If the circuit tests normal, replace the K20 ECM.
3. Verify that a test lamp does not illuminate between the appropriate control circuit listed below and B+.

- Ignition coil 1 control terminal D
- Ignition coil 2 control terminal E
- Ignition coil 3 control terminal F
- Ignition coil 4 control terminal G

If the test lamp illuminates, test the control circuit for a short to ground. If the circuit tests normal, replace the K20 ECM.

4. Vehicle OFF, all systems OFF. This may take up to 2 minutes for all vehicle systems to power down.
5. Connect a 3 A fused jumper wire to the appropriate control circuit listed below and ground.
   - Ignition coil 1 control terminal D
   - Ignition coil 2 control terminal E
   - Ignition coil 3 control terminal F
   - Ignition coil 4 control terminal G

   Note: This procedure needs to be performed quickly because once DTC P0AB9 or P16E0 sets, the engine will not turn over. If this occurs, turn the Vehicle OFF, all systems OFF. This may take up to 2 minutes for all vehicle systems to power down and then retest.

6. Attempt to start the engine, observe the appropriate Ignition Coil 1-4 Control Circuit Low Voltage Test Status parameter with a scan tool. The parameter should display Malfunction.
   If not the specified value, test the control circuit for an open/high resistance. If the circuit tests normal, replace the K20 ECM.
7. If all circuits test normal, test or replace the K35 ignition coil module.

Repair Instructions

Perform the Diagnostic Repair Verification after completing the diagnostic procedure.

- Ignition Coil Replacement
- Control Module References for engine control module replacement, setup, and programming

&#169© Copyright Chevrolet. All rights reserved

DTC P0420

Diagnostic Instructions

- Perform the Diagnostic System Check - Vehicle prior to using this diagnostic procedure.
- Review Strategy Based Diagnosis for an overview of the diagnostic approach.
- Diagnostic Procedure Instructions Provides An overview of each diagnostic category.

DTC Descriptor

DTC P0420: Catalyst System Low Efficiency

Circuit/System Description

A 3-way catalyst controls emissions of hydrocarbons, CO and NOX. The catalyst within the converter promotes a chemical reaction, which oxidises the hydrocarbon(s) and the CO that are present in the exhaust gas. This process converts the hydrocarbon(s) and the CO into water vapor and CO2, and reduces the NOX, converting the NOX into nitrogen. The catalyst also stores oxygen. The ECM monitors this process by using heated oxygen sensors (HO2S) that are in the exhaust stream before and after the 3- way catalyst. The HO2S produces an output signal that the ECM uses to calculate the oxygen storage capacity of the catalyst. This indicates the ability of the catalyst to convert the exhaust emissions efficiently. The ECM monitors the efficiency of the catalyst by monitoring the HO2S during an off-idle, ECM commanded Decel Fuel Cut Off (DFCO) event. When the catalyst is functioning properly, the post catalyst HO2S response to the fuel conditions during the DFCO event is slow compared to the response of the pre catalyst HO2S. When the post HO2S response is near that of the pre HO2S, the oxygen storage capability and efficiency of the catalyst may be degraded below an acceptable threshold.

Conditions for Running the DTC

- DTC P0030, P0036, P0053, P0054, P0101, P0102, P0103, P0106, P0107, P0108, P0111, P0112, P0113, P0114, P0116, P0117, P0118, P0119, P0121, P0122, P0123, P0128, P0131, P0132, P0133, P0134, P0135, P0137, P0138, P013A, P013B, P013E, P013F, P0140, P0141, P0171, P0172, P0178, P0179, P0201, P0202, P0203, P0204, P0222, P0223, P0300, P0301, P0302, P0303, P0304, P1133, P16F3, P2101, P2135, P2269, P2270, P2271, or P2A00 is not set.
- The engine speed is between 1,800-3,500 RPM to enable the catalyst diagnostic. Once the engine speed is in range, the engine speed must be between 1,700-3,650 RPM to keep the test enabled.
- The accelerator pedal position is less than 100 %.
- The evaporative emission (EVAP) purge is not commanded ON.

- The HO2S heaters are ON for greater than 60 s.
- The air flow into the engine is between 18-28 g/s.
- The system voltage is between 10-32 V.
- The vehicle speed is between 40-145 km/h (25-90 MPH) to enable the catalyst diagnostic. To keep the test enabled the vehicle speed cannot change greater than 5 km/h (3 MPH).
- The catalyst calculated temperature is less than 1,000°C (1,832°F).
- The engine is operating in closed loop.
- The engine is operating in Decel Fuel Cut Off (DFCO).

This diagnostic attempts one test during each valid OFF-idle period once the above conditions have been met. This diagnostic attempts up to 6 tests during each drive cycle.

Conditions for Setting the DTC

The ECM determines that the efficiency of the catalyst has degraded below a calibrated threshold.

Action Taken When the DTC Sets

DTC P0420 is a Type A DTC.

Conditions for Clearing the DTC

DTC P0420 is a Type A DTC.

Diagnostic Aids

Inspect for the following conditions, which may cause a catalyst to degrade:

- An engine misfire
- High engine oil or high coolant consumption
- Retarded spark timing
- A weak or poor spark
- A lean fuel mixture
- A rich fuel mixture
- A damaged oxygen sensor or wiring harness

Reference Information

Schematic Reference

Engine Controls Schematics

Connector End View Reference

Component Connector End Views

Description and Operation

Hybrid Modes of Operation Description

Electrical Information Reference

- Circuit Testing
- Connector Repairs
- Testing for Intermittent Conditions and Poor Connections
- Wiring Repairs

DTC Type Reference

Powertrain Diagnostic Trouble Code (DTC) Type Definitions

Scan Tool Reference

Control Module References for scan tool information

Circuit/System Verification

1. Vehicle in Service Mode, observe the DTC information with a scan tool. Verify there are no other DTCs set.
   If a DTC is set, refer to Diagnostic Trouble Code (DTC) List - Vehicle for further diagnosis.
2. Engine running, operate the vehicle within the Conditions for Running the DTC. Observe the scan tool Catalyst Monitor Not At Idle Test Conditions Met parameter. The parameter will change to Yes when the Conditions have been met.
   If not the specified value, operate the vehicle within the Conditions for Running the DTC.
3. Monitor the scan tool Catalyst Monitor Test State parameter. When the parameter indicates Active, the Catalyst Monitor Test is running.
4. Continue to monitor the parameter. When the parameter indicates Inactive, the Catalyst Monitor Test has completed.
5. When the test has completed, the Catalyst Monitor Test Counter parameter will increment by one and the Catalyst Monitor Test Result parameter will indicate Pass, Fail, or No Decision.
   If no decision has been made, repeat steps 2-4 until the Test Result parameter indicates Pass or Fail.

Circuit/System Testing

1. Verify the following conditions do not exist with the catalytic converter:
   - Dents
   - A severe discolouration caused by excessive temperatures
   - Road damage
   - An internal rattle caused by damaged catalyst substrate
   - Restrictions

     If a condition is found, replace the catalytic converter.
2. Verify the following conditions do not exist with the exhaust system:
   - Leaks
   - Physical damage
   - Loose or missing hardware

     If a condition is found, repair the exhaust system.
3. Verify the following conditions do not exist with the B52B Heated Oxygen Sensor 2.
   - The HO2S is not at the correct torque
   - Damage

     If a condition is found, repair or replace the B52B Heated Oxygen Sensor 2 as necessary.
4. If all physical conditions test normal, test or replace the catalytic converter.

Repair Instructions

- Restricted Exhaust
- Exhaust Leakage
- Heated Oxygen Sensor Replacement - Sensor 2
- Catalytic Converter Replacement
- Symptoms - Engine Exhaust

Repair Verification

1. Install any components that have been removed or replaced during diagnosis.
2. Perform any adjustments, programming or setup procedures that are required when a component is removed or replaced.
3. Clear the DTCs with a scan tool.
4. Vehicle OFF for 60 s.
5. Engine running, operate the vehicle within the Conditions for Running the DTC. Observe the scan tool Catalyst Monitor Not At Idle Test Conditions Met parameter. The parameter will change to Yes when the Conditions have been met.

   If not the specified value, operate the vehicle within the Conditions for Running the DTC.
6. Monitor the scan tool Catalyst Monitor Test State parameter. When the parameter indicates Active, the Catalyst Monitor Test is running.

7. Continue to monitor the parameter. When the parameter indicates Inactive, the Catalyst Monitor Test has completed
8. When the test has completed, the Catalyst Monitor Test Counter parameter will increment by one and the Catalyst Monitor Test Result parameter will indicate Pass, Fail, or No Decision.
   If no decision has been made, repeat steps 5-7 until the Test Result parameter indicates Pass or Fail.
9. If the repair was related to a DTC, duplicate the Conditions for Running the DTC and use the Freeze Frame/Failure Records, if applicable, in order to verify the DTC does not reset. If the DTC resets or another DTC is present, refer to the Diagnostic Trouble Code (DTC) List - Vehicle and perform the appropriate diagnostic procedure.

&#169© Copyright Chevrolet. All rights reserved

DTC P043E, P043F, or P145F

Diagnostic Instructions

- Perform the Diagnostic System Check - Vehicle prior to using this diagnostic procedure.
- Review Strategy Based Diagnosis for an overview of the diagnostic approach.
- Diagnostic Procedure Instructions provides an overview of each diagnostic category.

DTC Descriptors

DTC P043E: Evaporative Emission (EVAP) System Reference Orifice Flow Insufficient

DTC P043F: Evaporative Emission (EVAP) System Reference Orifice Flow Excessive

DTC P145F: Evaporative Emission (EVAP) System Reference Orifice Performance

Circuit/System Description

The evaporative emission (EVAP) system uses a EVAP leak detection pump to test for system leaks. The EVAP leak detection pump assembly consists of the following components:

- EVAP leak detection pump with reference orifice
- EVAP leak detection pump switching valve
- EVAP leak detection pump pressure sensor

The engine control module (ECM) monitors the pressure across the reference orifice with the EVAP leak detection pump pressure sensor. When all conditions are met, the ECM commands the vacuum pump ON and monitors the EVAP leak detection pump pressure sensor. If the ECM detects the pressure is too low, too high, or not stabilised, a DTC sets.

Conditions for Running the DTC

- DTCs P0101, P0102, P0103, P0106, P0107, P0108, P0111, P0112, P0113, P0114, P0116, P0117, P0118, P0119, P0121, P0122, P0123, P0128, P012B, P012C, P012D, P0222, P0223, P0449, P0451, P0452, P0453, P0461, P0462, P0463, P0498, P0499, P0502, P0503, P06E4, P0722, P0723, P1221, P1458, P1459, P145A, P145C,

P145D, P145E, P2066, P2067, P2068, P2400, P2401, P2402, P2418, P2419, P2420, P2421, P2422, P2450, P2537, P2610, U0073, U0074, U0140, or U182D is not set.

- The vehicle is OFF.
- The propulsion system is not active.
- The refueling request button is not pressed
- A service bay test is not active
- The purge valve is closed
- The vent solenoid valve is closed
- The EVAP Leak Detection Pump switching valve is in the vent position
- The EVAP Leak Detection Pump vacuum pump is ON
- The odometer is greater than 16 km (10 mi)
- The barometric pressure (BARO) is between 70-110 kPa (10-16 PSI)
- The fuel level is between 10-90%
- The engine coolant temperature is less than 40°C (104°F)
- The inlet air temperature is between 4-45°C (39-113°F)
- The system voltage is greater than 10 V
- The vehicle speed less than 1.6 km/h (1 MPH)
- There are three possible time windows for this test to run. Up to that point, and through this time period, the propulsion system must not be active. These time windows are: 5.0, 7.0 or 9.5 hours.

Conditions for Setting the DTC

P043E

- The ECM detects the EVAP leak detection pump pressure is greater than 4 kPa (0.58 PSI) after 6 minutes.
  OR
- The ECM detects the EVAP leak detection pump pressure is greater than 4.5 kPa (0.65 PSI) after 10 s.

P043F

- The ECM detects the EVAP leak detection pump pressure is less than 1.18 kPa (0.17 PSI) after 6 minutes.
  OR
- The ECM detects the EVAP leak detection pump pressure is less than 1.18 kPa (0.17 PSI) after 30 s.

P145F

The ECM detects the difference between the first EVAP leak detection pump pressure measurement is greater than 0.51 kPa (0.073 PSI) then the second measurement after 30 s.

Action Taken When the DTC Sets

DTCs P043E, P043F and P145F are Type B DTCs.

Conditions for Clearing the DTC

DTCs P043E, P043F and P145F are Type B DTCs.

Diagnostic Aids

- Inspect the tube and clamps from the EVAP leak detection pump to the vent solenoid for damage. A damage/open tube may allow debris to enter the pump and plug the reference orifice.
- Remove the EVAP leak detection pump and look inside the pump opening for any debris that could restrict or plug the reference orifice. The reference orifice is a small opening at the 2 o'clock position in the pump vacuum opening. Inspect for missing or damage O-rings.
- With the fresh air tube removed from the EVAP leak detection pump assembly, blow controlled air, 5-10 PSI, into this tube. There should be air escaping from behind the fuel fill pocket indicating this tube and filter are not restricted.
- A switching valve stuck in the pump position can cause insufficient flow.
- This part is not serviceable. It is very important that no debris be found in the pump fresh air inlet or vacuum openings, the tube between the vent solenoid valve and EVAP leak detection pump assembly as this could cause a P043E to set.

Reference Information

Schematic Reference

Engine Controls Schematics

Connector End View Reference

Component Connector End Views

Description and Operation

Evaporative Emission Control System Description

Hybrid Modes of Operation Description

Electrical Information Reference

- Circuit Testing

- Connector Repairs
- Testing for Intermittent Conditions and Poor Connections
- Wiring Repairs

DTC Type Reference

Powertrain Diagnostic Trouble Code (DTC) Type Definitions

Scan Tool Reference

Control Module References for scan tool information

Circuit/System Verification

1. Vehicle in Service Mode, verify the scan tool BARO pressure is within the range specified in the Altitude Versus Barometric Pressure table.
2. Record the EVAP leak detection pump pressure sensor reading. The reading should be 1.18-4 kPa (0.17-0.58 PSI) less than BARO.
3. Command the EVAP Leak Detection Pump Command ON with the scan tool and monitor the EVAP leak detection pump pressure. Observe this for a steady or increasing PSI.
   - If the PSI is increasing, then there is a restriction in the orifice.
   - If the PSI is steady, then the orifice is good.
4. Operate the vehicle within the Conditions for Running the DTC to verify the DTC does not reset. You may also operate the vehicle within the conditions that you observed from the Freeze Frame/Failure Records data.

Circuit/System Testing

Note: The reference orifice is a small opening at the 2 o'clock position in the pump vacuum opening.

1. Vehicle OFF, remove the Q63 EVAP leak detection pump. Inspect the reference orifice within the pump for a restriction/blockage. The reference orifice should not be restricted.
   If the reference orifice is restricted, inspect and repair any of the conditions listed below:
   - The EVAP leak detection pump to the vent solenoid tube and clamps for damage
   - A missing or damage EVAP leak detection pump O-rings
   - The fresh air tube near the fuel fill pocket for a restriction
   - The fresh air tube for a restriction
2. If all components test normal, replace the Q63 EVAP system leak detection pump assembly.

Repair Instructions

Perform the Diagnostic Repair Verification after completing the diagnostic procedure.

- Evaporative Emission System Vacuum Leak Detection Pump Replacement
- Control Module References for ECM replacement, setup, and programming

&#169© Copyright Chevrolet. All rights reserved

DTC P0442 or P0455

Diagnostic Instructions

- Perform the Diagnostic System Check - Vehicle prior to using this diagnostic procedure.
- Review Strategy Based Diagnosis for an overview of the diagnostic approach.
- Diagnostic Procedure Instructions provides an overview of each diagnostic category.

DTC Descriptors

DTC P0442: Evaporative Emission (EVAP) System Small Leak Detected

DTC P0455: Evaporative Emission (EVAP) System Large Leak Detected

Circuit/System Description

This DTC tests the evaporative emission (EVAP) system for a small and large leak when the Vehicle is turned OFF and the correct conditions are met. The propulsion system needs to be OFF for several hours before the small and large leak tests run. The EVAP leak detection pump creates a vacuum across a 0.51 mm (0.020 in) reference orifice. This reference vacuum is then compared to the vacuum level created in the fuel tank to determine if a leak exists

The following table illustrates the relationship between the ON and OFF states, and the OPEN or CLOSED states of the EVAP components:

Engine Control Module Command	EVAP Canister Purge Solenoid Valve	EVAP Canister Vent Solenoid Valve	Vacuum Pump	Switch Valve
ON	Open	Open/Venting	Pump Runs	Pump Position/Not Venting
OFF	Closed	Closed/Not Venting	Pump OFF	Vent Position

Conditions for Running the DTC

- DTCs P043E, P043F, P06E4, P0111, P0112, P0113, P0114, P0117, P0118, P0116, P0119, P0128, P0449, P0498, P0499, P1458, P145A, P145C, P145D, P145E, P145F, P0451, P0452, P0453, P0461, P0462, P0463, P0502, P0503, P0722, P0723, P1459, P2066, P2067, P2068, P2400, P2401, P2402, P2418, P2419, P2420, P2421, P2422, P2450, P2537, P2610, U0140, U182D, U0073, U0074, is not set
- The barometric pressure (BARO) is between 70-110 kPa (10-16 PSI).

- The fuel level is between 10-90 %.
- The ECT is less than 40°C (104°F).
- The IAT is between 4-45°C (39-113°F).
- The system voltage is greater than 10 V.
- Vehicle speed less than 1.6 km/h (1 MPH).
- A refuelling event needs to be detected prior to running this test --P0455 only.
- There are three possible time windows for this test to run. Up to that point and through this time period the propulsion system must not be active. These time windows are: 5.0, 7.0 or 9.5 hours.

Conditions for Setting the DTC

P0442

DTC P0442 sets when the EVAP leak detection pump pressure sensor (gauge) vacuum reading is less than the 0.51 mm (0.020 in) reference orifice vacuum measurement plus a calibrated value for greater than 6 min.

P0455

DTC P0455 sets after a refueling event has been detected and the small/large leak diagnostics have not passed. If the EVAP leak detection pump pressure sensor (gauge) vacuum reading is less than the 0.51 mm (0.020 in) reference orifice vacuum measurement and times a calibrated value for greater than 6 min.

Action Taken When the DTC Sets

DTCs P0442 and P0455 are Type B DTCs.

Conditions for Clearing the DTC

DTCs P0442 and P0455 are Type B DTCs.

Diagnostic Aids

- The EVAP system can be filled with smoke more quickly and completely by injecting smoke at the purge tube and commanding the vent solenoid valve open. For example, when injecting smoke at the purge tube, remove the filler cap or temporarily leave the vent solenoid valve open until smoke is observed. Close the system and continue testing. If using a fuel cap adapter at the filler neck, disconnect the purge tube at the EVAP canister purge solenoid valve until smoke is observed.
- To help locate intermittent leaks, use the *EN 41413-200* Evaporative Emissions System Tester to introduce smoke into the EVAP system. Move all EVAP components while observing smoke with a high intensity white light.
- To improve the visibility of the smoke exiting the EVAP system, observe the suspected leak area from different angles with a high intensity white light.
- If a small leak is difficult to find, it may be necessary to remove the EVAP components and test them one at a time using the adapters in the GE-41413-300 .

Reference Information

Schematic Reference

Engine Controls Schematics

Connector End View Reference

Component Connector End Views

Description and Operation

Evaporative Emission Control System Description

Hybrid Modes of Operation Description

Electrical Information Reference

- Circuit Testing
- Connector Repairs
- Testing for Intermittent Conditions and Poor Connections
- Wiring Repairs

DTC Type Reference

Powertrain Diagnostic Trouble Code (DTC) Type Definitions

Scan Tool Reference

Control Module References for scan tool information

Special Tools

- CH-48096 EVAP Service Access Port Tool
- GE-41413-300 EVAP Cap And Plug Kit
- J 41413-200 Evaporative Emissions System Tester
- GE-41413-SPT High Intensity White Light
- J 41415-30 Fuel Tank Cap Adapter

For equivalent regional tools, refer to Special Tools : Diagnostic Tools .

Circuit/System Verification

1. Verify the following conditions do not exist in the EVAP system:
   - Loose, incorrect, missing, or damaged fuel fill cap
   - A damaged EVAP purge solenoid
   - Disconnected, incorrectly routed, kinked, or damaged EVAP pipes and hoses
   - A damaged EVAP vent valve or EVAP canister

   If you find any of the above conditions, repair as necessary.

   Note: Refer to the J 41413-200 operation manual for detailed instructions in Evaporative Emission Control System Diagnosis

2. Disconnect the purge tube at the quick connector on the evaporative emission canister side of the Q12 evaporative emission canister purge solenoid valve and install the CH-48096
3. Connect the J 41413-200 to the CH-48096
4. Use the flow meter on the J 41413-200 calibrated to 0.51 mm (0.020 in) to determine if there is a leak in the evaporative emission system.

   Note:
   - Larger volume fuel tanks and/or those with lower fuel levels may require several minutes for the floating indicator to stabilise.
   - Ensure that the vehicle underbody temperature is similar to the ambient temperature and allow the surrounding air to stabilise before starting the diagnostic procedure. The system flow will be less with higher temperatures.

5. Use the remote switch to activate the J 41413-200 and compare the flow meter's stable floating indicator position to the red flag. The floating indicator should be below the red flag.
6. Operate the vehicle within the conditions for running the DTC to verify the DTC does not reset. You may also operate the vehicle within the conditions that you observed from the freeze frame/failure records data.

Circuit/System Testing

1. Vehicle OFF, turn the nitrogen/smoke valve on the control panel to SMOKE.

2. Vehicle in Service Mode, command the EVAP vent solenoid ON with a scan tool.

Note:
- The fuel sender may need to be accessed to inspect some of the EVAP system components.
- Larger volume fuel tanks and/or those with lower fuel levels may require several minutes for the floating indicator to stabilise.
- Introduce smoke at 15 second intervals while testing the system.

3. Use the remote switch to introduce smoke into the EVAP system.

4. Verify that smoke is not exiting the entire EVAP system with the GE-41413-SPT

If smoke is observed, repair the condition as necessary.

Repair Verification

1. Install any components or connectors that have been removed or replaced during diagnosis.
2. Perform any adjustment, programming or setup procedures that are required when a component or module is removed or replaced.
3. Clear the DTCs
4. Vehicle OFF, all systems OFF, this may take up to 2 minutes.
5. Vehicle in Service Mode, seal the EVAP system and use the flow meter on the J 41413-200 , calibrated to 0.51 mm (0.020 in) to determine that there is no leak in the EVAP system. Use the remote switch to activate the J 41413-200 and compare the flow meter's stable floating indicator position to the red flag. The floating indicator should be below the red flag.
   If floating indicator is above the red flag, a leak still exists.
6. If the repair was related to a DTC, duplicate the conditions for running the DTC and use the freeze frame/failure records, if applicable, in order to verify the DTC does not reset. If the DTC resets or another DTC is present, refer to the Diagnostic Trouble Code (DTC) List - Vehicle and perform the appropriate diagnostic procedure.

Repair Instructions

Perform the Diagnostic Repair Verification after completing the diagnostic procedure.

- Evaporative Emission Canister Vent Solenoid Valve Replacement
- Evaporative Emission Canister Replacement
- Evaporative Emission Canister Purge Solenoid Valve Replacement
- Fuel Tank Fuel Pump Module Replacement

&#169© Copyright Chevrolet. All rights reserved

DTC P0443, P0458, or P0459

Diagnostic Instructions

- Perform the Diagnostic System Check - Vehicle prior to using this diagnostic procedure.
- Review Strategy Based Diagnosis for an overview of the diagnostic approach.
- Diagnostic Procedure Instructions provides an overview of each diagnostic category.

DTC Descriptors

DTC P0443 : Evaporative Emission (EVAP) Purge Solenoid Valve Control Circuit

DTC P0458: Evaporative Emission (EVAP) Purge Solenoid Valve Control Circuit Low Voltage

DTC P0459: Evaporative Emission (EVAP) Purge Solenoid Valve Control Circuit High Voltage

Diagnostic Fault Information

Circuit	Short to Ground	Open/High Resistance	Short to Voltage
Ignition 1 Voltage	P0030, P0036, P0102, P0135, P0138, P0141, P0443, P0458, P0598	P0030, P0036, P0102, P0135, P0138, P0141, P0443, P0458, P0598	-
Evaporative Emission Purge Solenoid Valve Control	P0458	P0443	P0459

Circuit/System Description

The evaporative emission (EVAP) purge solenoid valve is used to purge fuel vapor from the EVAP canister to the inlet manifold. The EVAP purge solenoid valve is pulse width modulated (PWM). Ignition voltage is supplied directly to the EVAP purge solenoid valve. The engine control module (ECM) controls the solenoid by grounding the control circuit with a solid state device called a driver. The driver is equipped with a feedback circuit that is pulled-up to a voltage. The ECM can determine if the control circuit is open, shorted to ground, or shorted to a voltage by monitoring the feedback voltage.

Conditions for Running the DTC

- The vehicle is ON.
- The powertrain relay voltage is greater than 11 V.
- DTCs P0443, P0458 and P0459 run continuously when the above conditions are met.

Conditions for Setting the DTC

The ECM detects that the commanded state of the driver and the actual state of the control circuit do not match for a minimum of 5 s.

Action Taken When the DTC Sets

DTCs P0443, P0458 and P0459 are Type B DTCs.

Conditions for Clearing the DTC

DTCs P0443, P0458 and P0459 are Type B DTCs.

Reference Information

Schematic Reference

Engine Controls Schematics

Connector End View Reference

Component Connector End Views

Description and Operation

Evaporative Emission Control System Description

Hybrid Modes of Operation Description

Electrical Information Reference

- Circuit Testing
- Connector Repairs
- Testing for Intermittent Conditions and Poor Connections

- Wiring Repairs

DTC Type Reference

Powertrain Diagnostic Trouble Code (DTC) Type Definitions

Scan Tool Reference

Control Module References for scan tool information

Circuit/System Verification

1. Vehicle in Service Mode, command the EVAP purge solenoid valve to 50 percent with a scan tool. You should hear the solenoid clicking.
2. Engine running, command the EVAP purge solenoid valve from 0 to 50 percent and back to 0 percent with a scan tool while observing the control circuit status parameters listed below:
   - EVAP Purge Solenoid Valve Control Circuit High Voltage Test Status
   - EVAP Purge Solenoid Valve Control Circuit Open Test Status
   - EVAP Purge Solenoid Valve Control Circuit Low Voltage Test Status

   Each parameter should display OK or Not Run.
3. Operate the vehicle within the conditions for running the DTC to verify the DTC does not reset. You may also operate the vehicle within the conditions that you observed from the freeze frame/failure records data.

Circuit/System Testing

1. Vehicle OFF, disconnect the harness connector at the Q12 evaporative emission purge solenoid valve.
2. Vehicle in Service Mode, verify that a test lamp illuminates between the ignition voltage circuit terminal 1 and ground.
   If the test lamp does not illuminate, test the ignition voltage circuit for a short to ground or an open/high resistance. If the circuit tests normal and the ignition voltage circuit fuse is open, test all components connected to the ignition voltage circuit and replace as necessary.
3. Test for 2.5-3.5 V between the control circuit terminal 2 and ground
   If less than the specified range, test the control circuit for a short to ground or an open/high resistance. If the circuit/connections test normal, replace the K20 engine control module.
   If greater than the specified range, test the control circuit for a short to voltage. If the circuit tests normal, replace the K20 engine control module.
4. Command the EVAP purge solenoid valve from 0 to 100 percent with a scan tool. The DMM should transition from 2.5-3.5 V at 0 percent, to less than 0.2 V when commanded to 100 percent.
   If the circuit voltage does not correspond to the specified values, replace the K20 engine control module
5. If all circuits test normal, test or replace the Q12 evaporative emission purge solenoid valve

Component Testing

1. Vehicle OFF, disconnect the harness connector at the Q12 evaporative emission purge solenoid valve

2. Test for 25.0-30.0 Ω between the control terminal 2 and the ignition voltage terminal 1.

   If not within the specified range, replace the Q12 evaporative emission purge solenoid valve

Repair Instructions

Perform the Diagnostic Repair Verification after completing the diagnostic procedure.

- Evaporative Emission Canister Purge Solenoid Valve Replacement
- Control Module References for ECM replacement, setup, and programming

&#169© Copyright Chevrolet. All rights reserved

DTC P0449, P0498, or P0499

Diagnostic Instructions

- Perform the Diagnostic System Check - Vehicle prior to using this diagnostic procedure.
- Review Strategy Based Diagnosis for an overview of the diagnostic approach.
- Diagnostic Procedure Instructions provides an overview of each diagnostic category.

DTC Descriptors

DTC P0449: Evaporative Emission (EVAP) Vent Solenoid Valve Control Circuit

DTC P0498: Evaporative Emission (EVAP) Vent Solenoid Valve Control Circuit Low Voltage

DTC P0499: Evaporative Emission (EVAP) Vent Solenoid Valve Control Circuit High Voltage

Diagnostic Fault Information

Circuit	Short to Ground	Open/High Resistance	Short to Voltage
B+	P0498	P0449, P0498	-
Evaporative Emission Vent Solenoid Valve Control	P0498	P0449	P0499

Circuit/System Description

The EVAP vent solenoid valve controls fresh airflow into the EVAP canister. Battery voltage is supplied to the normally closed evaporative emission (EVAP) vent solenoid valve. The ECM grounds the EVAP vent solenoid valve control circuit through an internal switch called a driver. The ECM monitors the status of the driver. The driver is equipped with a feedback circuit that is pulled-up to a voltage. The ECM can determine if the control circuit is open, shorted to ground, or shorted to a voltage by monitoring the feedback voltage.

Conditions for Running the DTC

DTCs P0449, P0498 and P0499 run continuously when the above conditions are met.

Conditions for Setting the DTC

The ECM detects that the commanded state of the driver and the actual state of the control circuit do not match for greater than 5 s.

Action Taken When the DTC Sets

DTCs P0449, P0498 and P0499 are Type B DTCs.

Conditions for Clearing the DTC

DTCs P0449, P0498 and P0499 are Type B DTCs.

Diagnostic Aids

Where multiple DTCs set look for a common root cause like battery feeds, grounds, splices, etc.

Reference Information

Schematic Reference

Engine Controls Schematics

Connector End View Reference

Component Connector End Views

Description and Operation

Evaporative Emission Control System Description

Hybrid Modes of Operation Description

Electrical Information Reference

- Circuit Testing
- Connector Repairs
- Testing for Intermittent Conditions and Poor Connections
- Wiring Repairs

DTC Type Reference

Powertrain Diagnostic Trouble Code (DTC) Type Definitions

Scan Tool Reference

Control Module References for scan tool information

Circuit/System Verification

1. Vehicle in Service Mode, command the EVAP vent solenoid valve ON and OFF with a scan tool. Listen for a click when the valve operates.
2. Vehicle in Service Mode, observe the EVAP vent solenoid output control parameters with a scan tool.
   - EVAP Vent Solenoid Valve Output Circuit High Voltage Test Status
   - EVAP Vent Solenoid Valve Output Circuit Open Test Status
   - EVAP Vent Solenoid Valve Output Circuit Low Voltage Test Status

   Each parameter should display OK or Not Run.
3. Operate the vehicle within the conditions for running the DTC to verify the DTC does not reset. You may also operate the vehicle within the conditions that you observed from the freeze frame/failure records data.

Circuit/System Testing

1. Vehicle OFF, disconnect the harness connector at the Q13 evaporative emission vent solenoid valve.
2. Vehicle in Service Mode, verify that a test lamp illuminates between the battery voltage circuit terminal 2 and ground.
   If the test lamp does not illuminate, test the battery voltage circuit for a short to ground or an open/high resistance. If the circuit tests normal and the battery voltage circuit fuse is open, test all components connected to the battery voltage circuit and replace as necessary.
3. Test for 2.5-3.5 V between the control circuit terminal 1 and ground.
   If less than the specified range, test the control circuit for a short to ground or an open/high resistance. If the circuit/connections test normal, replace the K20 engine control module.
   If greater than the specified range, test the control circuit for a short to voltage. If the circuit tests normal, replace the K20 engine control module.
4. Command the EVAP vent solenoid valve On and Off with a scan tool. The DMM should transition from 2.5-3.5 V when commanded Off, to less than 0.2 V when commanded On..
   If the circuit voltage does not correspond to the specified values, replace the K20 engine control module.
5. If all circuits test normal, test or replace the Q13 evaporative emission vent solenoid valve.

Component Testing

1. Vehicle OFF, disconnect the harness connector at the Q13 evaporative emission vent solenoid valve.
2. Test for 25.0-30.0 Ω between the control terminal 1 and the battery voltage terminal 2.

If not within the specified range, replace the Q13 evaporative emission vent solenoid valve.

3. Test for no air flow through the Q13 evaporative emission vent solenoid valve by applying vacuum to the pump side of the valve. It should hold 1-2 in. Hg (3-7 kPa) for 30 s.
   If not within the specified range, replace the Q13 evaporative emission vent solenoid valve.
4. Reconnect the harness connector at the Q13 evaporative emission vent solenoid valve.
5. Command the Q13 evaporative emission vent solenoid valve On with a scan tool and apply vacuum to the pump side of the valve. It should not hold vacuum.
   If not within the specified range, replace the Q13 evaporative emission vent solenoid valve.

Repair Instructions

Perform the Diagnostic Repair Verification after completing the diagnostic procedure.

- Evaporative Emission Canister Vent Solenoid Valve Replacement
- Control Module References for ECM replacement, setup, and programming

&#169© Copyright Chevrolet. All rights reserved

DTC P0451-P0453

Diagnostic Instructions

- Perform the Diagnostic System Check - Vehicle prior to using this diagnostic procedure.
- Review Strategy Based Diagnosis for an overview of the diagnostic approach.
- Diagnostic Procedure Instructions provide an overview of each diagnostic category.

DTC Descriptors

DTC P0451: Fuel Tank Pressure (FTP) Sensor Performance

DTC P0452: Fuel Tank Pressure (FTP) Sensor Circuit Low Voltage

DTC P0453: Fuel Tank Pressure (FTP) Sensor Circuit High Voltage

Diagnostic Fault Information

Circuit	Short to Ground	Open/High Resistance	Short to Voltage	Signal Performance
FTP Sensor 5 V Reference	P0452, P0532, P0641	P0452	P0453, P0533,P0641 *	-
FTP Sensor Signal	P0452	P0452	P0453 *	-
FTP Sensor Low Reference	-	P0453, P0463, P1458, P145A	-	-
* Internal ECM or FTP sensor damage may occur if the circuit is shorted to B+.				

Typical Scan Tool Data

Fuel Tank Pressure Sensor

Circuit	Short to Ground	Open	Short to Voltage
Operating Conditions: Vehicle in Service Mode			

Parameter Normal Range: 0.15-4.85 V			
FTP Sensor 5 V Reference	0 V	0-1.5 V	5 V
FTP Sensor Signal	0 V	0 V	3-5 V
FTP Sensor Low Reference	-	4-5 V	-

Circuit/System Description

The fuel tank pressure (FTP) sensor measures the pressure or vacuum in the evaporative emission (EVAP) system. The engine control module (ECM) supplies a 5 V reference and a low reference circuit to the FTP sensor. The FTP sensor signal voltage varies depending on EVAP system pressure or vacuum.

The following tables illustrate relationship examples between the FTP sensor and the ON and OFF states, and the OPEN or CLOSED states of the EVAP components:

FTP Relationship

Fuel Tank Pressure	FTP in. H2O/PSI	FTP Signal Voltage
Pressure	Positive Value, 14.9 in. H2O / 0.54 PSI	High, 4.73 V
No Pressure	Near Zero, 0 in. H2O / 0.001 PSI	2.6 V
Vacuum	Negative Value, -2.37 in. H2O / -0.08 PSI	Low, 2.3 V

FTP to EVAP Leak Detection Pump Assembly Relationship

Fuel Tank Pressure	FTP Sensor	EVAP Leak Detection Pump Switch Valve	Vent Valve	EVAP Leak Detection Pump Pressure
Pressure or Vacuum	Positive or Negative Value	Vent	Closed	100 kPa (14.50 PSI) *
Vacuum	Negative Value - 1 kPa (0.15 PSI)	Pump/Not Venting	Open	99 kPa (14.36 PSI) **
Pressure	Positive Value - 3 kPa (0.44 PSI)	Pump/Not Venting	Open	103 kPa (14.94 PSI) **
* Equivalent to barometric pressure reading. ** The values are examples only. Your readings may vary from this depending on the pressure or vacuum in the system and barometric pressure.				

Conditions for Running the DTC

P0451

Condition 1:

- DTCs P0101, P0102, P0103, P0106, P0107, P0108, P0111, P0112, P0113, P0114, P0116, P0117, P0118, P0119, P0121, P0122, P0123, P0128, P012B, P012C, P012D, P0222, P0223, P0449, P0452, P0453, P0461, P0462, P0463, P0498, P0499, P0502, P0503, P06E4, P06E4, P0722, P0723, P1221, P1459, P145A, P2066, P2067,

P2068, P2400, P2401, P2402, P2418, P2419, P2420, U0140, U182D, U0073, U0074, P2537 or P2610 is not set.
- DTC P1458 or P145D are not present when the test failed this ignition cycle.
- The barometric pressure (BARO) is between 70-110 kPa (10 -16 PSI).
- The fuel level is between 10-90 %.
- The engine coolant temperature (ECT) is less than 40°C (104°F).
- The inlet air temperature (IAT) is between 4°-45°C (39°-113°F).
- The propulsion system is not active.
- The vehicle is OFF.
- The service bay test is not active.
- The refuelling request button is not pressed.
- The battery voltage is greater than 10 V.
- The vehicle speed is less than 1.6 km/h (1 MPH).
- There are three possible time windows for this test to run. Up to that point and through this time period the propulsion system must not be active. These time windows are: 5.0, 7.0 or 9.5 hours.
- The DTC runs once per drive cycle and immediately after a code clear when the above conditions are met.

Condition 2:

- DTCs P0068, P0071, P0072, P0073, P010C, P010D, P0101, P0102, P0103, P0106, P0107, P0108, P0111, P0112, P0113, P0114, P012B, P012C, P012D, P0121, P0122, P0123, P0222, P0223, P0442, P0443, P0449, P0452, P0453, P0455, P0458, P0459, P0498, P0499, P0502, P0503, P0722, P0723, P0606, P1104, P1221, P145A, P145D, P145E, P1458, P1459, P16F3, P2100, P2101, P2102, P2103, P2400, P2401, P2402, P2418, P2419, P2420, P2422 or P2450 is not set.
- The barometric pressure (BARO) is between 70-110 kPa (10-16 PSI).
- The outside air temperature (OAT) is between 4°-35°C (39-102°F).
- The engine is running.
- The run/crank voltage is greater than 11 V.
- The EVAP Purge solenoid valve is not enabled.
- The refueling request button is not pressed
- The DTC runs once per drive cycle when the above conditions are met.

P0452 and P0453

- Vehicle ON or the engine is running.
- DTCs P0452 and P0453 run continually when the above conditions are met.

Conditions for Setting the DTC

P0451

The ECM detects the difference between the FTP sensor and the EVAP leak detection pump (ELDP) pressure is greater than 0.747 kPa (0.11 PSI) for greater than 5 s

P0452

The ECM detects the FTP sensor voltage is less than 0.15 V for greater than 8 s.

P0453

The ECM detects the FTP sensor voltage is greater than 4.85 V for greater than 8 s.

Action Taken When the DTC Sets

DTCs P0451, P0452 and P0453 are Type B DTCs.

Conditions for Clearing the DTC

DTCs P0451, P0452 and P0453 are Type B DTCs.

Diagnostic Aids

- A restriction in the EVAP canister or vent lines that keeps the FTP and EVAP leak detection pump sensor from comparing each others value.
- Since this is a sealed system there could be a pressure or vacuum existing in the system.
- A vent valve stuck closed will affect performance.
- A switching valve stuck in the vent position will affect performance.
- Ensure that the reference port on the FTP sensor is unobstructed.
- Scan tool output controls, snapshot, and the plot function can help detect erratic sensor operation.

Reference Information

Schematic Reference

Engine Controls Schematics

Connector End View Reference

Component Connector End Views

Description and Operation

Evaporative Emission Control System Description

Hybrid Modes of Operation Description

Electrical Information Reference

- Circuit Testing
- Connector Repairs
- Testing for Intermittent Conditions and Poor Connections
- Wiring Repairs

DTC Type Reference

Powertrain Diagnostic Trouble Code (DTC) Type Definitions

Scan Tool Reference

Control Module References for scan tool information

Special Tools

J 41413-200 Evaporative Emissions System Tester

For equivalent regional tools, refer to Special Tools : Diagnostic Tools .

Circuit/System Verification

Note: The order of these steps is important. If not followed properly you will be bleeding off any pressure or vacuum in the system and not see any change in the EVAP leak detection pump sensor.

P0451

1. Vehicle in Service Mode, observe and note the EVAP Leak Detection Pump Pressure with a scan tool.
2. Observe and note the FTP sensor pressure.
   If the FTP is 0 in. H2O (0 PSI), 0.15-0.29 PSI pressure or vacuum will need to added to the EVAP system.
   If the FTP is 15 in. H2O (0.54 PSI), you will need to reduce the pressure or vacuum by 0.15-0.29 PSI before proceeding as this is outside the readable range of the FTP sensor.

   Note: Ambient and vehicle component temperature must be above 0°C (32°F) to command the switching valve. This prevents erroneous results and damage to the EVAP leak detection pump assembly.

3. Command the EVAP Leak Detection Pump Switching Valve Command to Not Venting and command the EVAP Vent Solenoid Valve Command ON.
4. Observe and note the EVAP Leak Detection Pump Pressure, and Fuel Tank Pressure Sensor with a scan tool.
5. Subtract the second EVAP Leak Detection Pump Pressure reading from the first reading. This value equals what the Fuel Tank Pressure Sensor should be (ELDP reading 2 - ELDP reading 1 = FTP reading 2). The Fuel Tank Pressure Sensor should be within 0.747 kPa (0.11 PSI).

P0452 and P0453

1. Request a refuelling event. This opens the vent valve to bleed off any pressure or vacuum.
2. Remove the fuel cap.
3. Vehicle in Service Mode.
4. Observe the scan tool FTP sensor parameter.
5. The FTP sensor parameter should be 2.63 V at 0 kPa (0 PSI).

Circuit/System Testing

1. Vehicle OFF, disconnect the harness connector B150 fuel tank pressure sensor.

   Note: Testing for steps 2-6 is performed on the ECM side of the harness connector.

2. Vehicle OFF, all systems OFF. It may take up to 2 minutes for all vehicle systems to power down. Test for less than 5 Ω between the B150 fuel tank pressure sensor low reference circuit terminal 2 and ground.
   If greater than the specified range, test the low reference circuit for an open/high resistance. If the circuit tests normal, replace the K20 engine control module.
3. Vehicle in Service Mode, test for 4.8-5.2 V between the B150 fuel tank pressure sensor 5 V reference circuit terminal 3 and ground.
   If less than the specified range, test the 5 V reference circuit for a short to ground or an open/high resistance. If the circuit tests normal, replace the K20 engine control module.
   If greater than the specified range, test the 5 V reference circuit for a short to voltage. If the circuit tests normal, replace the K20 engine control module.
4. Verify the scan tool FTP sensor parameter is less than 0.2 V.
   If greater than the specified range, test the B150 fuel tank pressure sensor circuit terminal 1 for a short to voltage. If the circuit tests normal, replace the K20 engine control module.
5. Install a 3 A fused jumper wire between the B150 fuel tank pressure sensor signal circuit terminal 1 and the 5 V reference circuit terminal 3. Verify the scan tool FTP sensor parameter is greater than 4.7 V.
   If less than the specified range, test the signal circuit for a short to ground or an open/high resistance. If the circuit tests normal, replace the K20 engine control module.

   Note: Testing for this step is performed on the EVAP assembly side of the harness connector.

6. Remove the EVAP assembly and test, inspect, and repair the items listed below. If all items test normal, replace the B150 fuel tank pressure sensor
   - Poor connection at the X350 harness connector
   - Open or shorted 5 V reference circuit

- Open or shorted sensor signal circuit
- Open low reference circuit

Repair Instructions

Perform the Diagnostic Repair Verification after completing the diagnostic procedure.

- Fuel Tank Pressure Sensor Replacement
- Control Module References for ECM replacement, setup, and programming.

&#169© Copyright Chevrolet. All rights reserved

DTC P0497

Diagnostic Instructions

- Perform the Diagnostic System Check - Vehicle prior to using this diagnostic procedure.
- Review Strategy Based Diagnosis for an overview of the diagnostic approach.
- Diagnostic Procedure Instructions provides an overview of each diagnostic category.

DTC Descriptor

DTC P0497: Evaporative Emission (EVAP) System No Flow During Purge

Circuit/System Description

This DTC tests for proper inlet manifold vacuum flow to the evaporative emission (EVAP) system. The engine control module (ECM) opens the EVAP canister purge solenoid valve and the EVAP canister vent solenoid valve. The ECM then monitors the fuel tank pressure (FTP) sensor and EVAP leak detection pump pressure sensor to determine if a vacuum is being drawn on the EVAP system. If vacuum in the EVAP system is less than a predetermined value within a predetermined time, this DTC sets.

Conditions for Running the DTC

- DTCs P0068, P0071, P0072, P0073, P0106, P0107, P0108, P0122, P0123, P0222, P0223, P0443, P0449, P0451, P0452, P0453, P0455, P0458, P0459, P0498, P0499, P0502, P0503, P0606, P0722, P0723, P16F3, P1104, P1458, P1459, P145A, P145D, P145E, P2100, P2101, P2102, P2103, P2400, P2401, P2402, P2418, P2419, P2420, P2422, P2450 is not set.
- The EVAP purge solenoid is open.
- The EVAP vent solenoid is open.
- The EVAP leak detection pump switching valve transitions from vent to not vent, pumping, to vent.
- The EVAP leak detection pump is OFF.
- The ignition voltage is greater than 11 volts.
- The barometric pressure (BARO) is between 70-110 kPa (10-16 PSI).
- The outside air temperature is between 4-35°C (39-95°F).
- The engine RPM to enable is between 1500-3400
- The engine RPM to re-enable is between 1600-3300

- The engine vacuum to enable is between 10-37 kPa (1.5-5.4 PSI)
- The engine vacuum to re-enable is between 11-35 kPa (1.6-5.1 PSI)
- The engine airflow to enable is between 9-34 gps
- The engine airflow to re-enable is between 10-32 gps
- The purge flow to enable is greater than 0.14 gps
- The purge flow to re-enable is greater than 0.13 gps
- The purge duty cycle to enable is greater than 15 %
- The purge duty cycle to re-enable is greater than 16 %
- The requested purge flow to enable is greater than 1.45 %
- The delivered purge flow to re-enable is greater than 1.40 %
- The delivered purge flow to enable is greater than 1.10 %
- The engine is running
- The purge is enabled
- The refuelling request button is not pressed
- The device control is less than 0.5 seconds
- The fuel tank protection is not active.

DTC P0497 will run once per trip with propulsion system active and engine ON.

Conditions for Setting the DTC

After an initial time delay of 3 s when the FTP sensor reading is greater than 0.39 kPa (0.056 PSI)

Or

After an initial time delay of 3 s when the FTP sensor reading is less than 0.39 kPa (0.056 PSI), plus an EVAP leak detection pump switching valve delay time of 0.2 s.

If the EVAP leak detection pump pressure sensor, gauge, indicates a vacuum change less than 2 kPa (0.29 PSI) for 20 s, then a low purge flow failure has been detected.

Action Taken When the DTC Sets

DTC P0497 is a Type B DTC.

Conditions for Clearing the MIL/DTC

DTC P0497 is a Type B DTC.

Diagnostic Aids

- A temporary blockage in the EVAP canister purge solenoid valve, purge pipe or EVAP canister could cause an intermittent condition. Inspect and repair any restriction in the EVAP system.
- A EVAP vent solenoid valve stuck closed can cause this DTC to set.
- A EVAP leak detection pump switching valve stuck in the vent or pump position can cause this DTC to set.
- A fuel tank fuel pump module assembly not fully seated in the fuel tank can cause this DTC to set.
- A loose fuel cap can cause this DTC to set.

Reference Information

Schematic Reference

Engine Controls Schematics

Connector End View Reference

Component Connector End Views

Description and Operation

Evaporative Emission Control System Description

Hybrid Modes of Operation Description

Electrical Information Reference

- Circuit Testing
- Connector Repairs
- Testing for Intermittent Conditions and Poor Connections
- Wiring Repairs

DTC Type Reference

Powertrain Diagnostic Trouble Code (DTC) Type Definitions

Scan Tool Reference

Control Module References for scan tool information

Special Tools

- J 41413-200 Evaporative Emissions System Tester (EEST)
- GE-41413-300 EVAP Cap And Plug Kit
- GE-41413-SPT High Intensity White Light
- CH-48096 EVAP Service Access Port Tool

For equivalent regional tools, refer to Special Tools : Diagnostic Tools .

Circuit/System Verification

1. Verify the following conditions do not exist in the EVAP system:
   - A loose, missing, or damaged fuel fill cap.
   - A stuck closed, blocked, or restricted EVAP canister purge solenoid valve.
   - A blockage or restriction in the EVAP canister purge solenoid valve vacuum supply hose, purge pipe, EVAP canister or vapor pipe.

   If you find any of the above conditions, repair as necessary.

   Note: Refer to *EN 41413-200* Evaporative Emissions System Tester operation manual for detailed instructions in Evaporative Emission Control System Diagnosis
2. Connect the CH-48096 to the EVAP purge solenoid valve. Connect the J 41413-200 to CH-48096 .
3. Be sure the EVAP leak detection pump switching valve is in the vent position and the vent solenoid is open.
4. Use the flow meter on the J 41413-200 calibrated to 0.51 mm (0.020 in) to determine there is no leak in the EVAP system.
   If a leak is detected, use the J 41413-200 to apply smoke to the EVAP system until the leak is located following the Evaporative Emission Control System Diagnosis .
5. To improve the visibility of the smoke exiting the EVAP system, observe the suspected leak area from different angles with the GE-41413-SPT .
6. Operate the vehicle within the conditions for running the DTC to verify the DTC does not reset. You may also operate the vehicle within the conditions that you observed from the freeze frame/failure records data.

Circuit/System Testing

Note: Perform the Circuit/System Verification before proceeding with the Circuit/System Testing.

1. Remove the J 41413-200 installed during verification then install a vacuum gauge to the CH-48096
2. Engine running observe the vacuum gauge. Vacuum should not be present.
   If there is vacuum present test or replace the Q12 EVAP purge solenoid valve.
3. Observe the vacuum gauge while commanding the Q12 EVAP purge solenoid valve on with the scan tool. Vacuum should be present from 10-100 %
   If no vacuum is present test or replace the Q12 EVAP purge solenoid valve.
4. Command the EVAP Test and observe the FTP sensor voltage with a scan tool. The FTP sensor parameter should be less than 0.60 volts within 60 seconds.
   If the FTP sensor parameter is less than the specified range, repair the blocked purge path.

Repair Instructions

Perform the Diagnostic Repair Verification after completing the diagnostic procedure.

- Evaporative Emission Canister Purge Solenoid Valve Replacement
- Evaporative Emission Canister Vent Solenoid Valve Replacement
- Evaporative Emission Canister Replacement
- Evaporative Emission System Vacuum Leak Detection Pump Replacement

&#169© Copyright Chevrolet. All rights reserved

DTC P0601-P0604, P0606, P062B, P062F, P0630, P16F3, or P2610 - ECM

Diagnostic Instructions

- Preform the Diagnostic System Check - Vehicle prior to using this diagnostic procedure.
- Review Strategy Based Diagnosis for an overview of the diagnostic approach.
- Diagnostic Procedure Instructions provides an overview of each diagnostic category.

DTC Descriptors

DTC P0601: Control Module Read Only Memory Performance

DTC P0602: Control Module Not Programmed

DTC P0603: Control Module Long Term Memory Reset

DTC P0604: Control Module Random Access Memory Performance

DTC P0606: Control Module Processor Performance

DTC P062F: Control Module Long Term Memory Performance

DTC P0630: VIN Not Programmed or Mismatched - Engine Control Module (ECM)

DTC P16F3: Control Module Redundant Memory Performance

DTC P2610: Control Module Ignition off Timer Performance

Circuit/System Description

This diagnostic applies to internal microprocessor integrity conditions within the engine control module (ECM). This diagnostic also addresses if the ECM is not programmed.

The ECM monitors its ability to read and write to the memory. It also monitors a timing function.

Conditions for Running the DTC

P0601, P0602, P0630, P16F3

- The vehicle is ON.
- These DTCs run continuously when the above condition is met.

P0603, P062F

- The vehicle is ON.
- These DTCs run once per ignition cycle.

P0604

- The vehicle is ON for greater than 30 s.
- DTC P0604 runs continuously when the above condition is met.

P0606

- The system voltage is greater than 11 V.
- DTC P0606 runs continuously when the above condition is met.

P2610

- Vehicle OFF.
- The ECM is not powered down.
- DTC P2610 runs continuously when the above conditions are met.

Conditions for Setting the DTC

The ECM detects an internal failure or incomplete programming for more than 10 s.

Action Taken When the DTC Sets

- DTCs P0601, P0602, P0603, P0604, P0606, P062F, P0630, and P16F3 are Type A DTCs.
- DTC P2610 is a Type B DTC.

Conditions for Clearing the DTC

- DTCs P0601, P0602, P0603, P0604, P0606, P062F, P0630, and P16F3 are Type A DTCs.
- DTC P2610 is a Type B DTC.

Diagnostic Aids

Low voltage or a momentary loss of power or ground to the ECM may cause a DTC to set. Verify the following:

- The battery cables are clean and tight, and the battery is fully charged. Refer to Battery Inspection/Test
- The ECM ground circuits do not have an open circuit or high resistance.
- The ECM power circuits do not have an open circuit, short to ground, or high resistance.

Reference Information

Schematic Reference

Engine Controls Schematics

Connector End View Reference

Component Connector End Views

Description and Operation

Hybrid Modes of Operation Description

Electrical Information Reference

- Circuit Testing
- Connector Repairs
- Testing for Intermittent Conditions and Poor Connections
- Wiring Repairs

DTC Type Reference

Powertrain Diagnostic Trouble Code (DTC) Type Definitions

Scan Tool Reference

Control Module References for scan tool information

Circuit/System Verification

1. Vehicle in Service Mode, clear the DTC information with a scan tool. Observe the DTC information with the scan tool.
2. Verify that DTC P0335 or P0651 is not set.
   If DTC P0335 or P0651 is set, refer to DTC P0335 or P0336 or DTC P0641, P0651, P0697, or P06A3 : ECM .
3. Verify that DTC P0602 or P0630 is not set.
   If DTC P0602 or P0630 is set, program the K20 ECM. Refer to Control Module References . If DTC P0602 or P0630 resets, replace the K20 ECM.
4. Verify that DTC P0601, P0603, P0604, P0606, P062F, P16F3, or P2610 is not set.
   If a DTC set this ignition, replace the K20 ECM.

Repair Instructions

Perform the Diagnostic Repair Verification after completing the diagnostic procedure.

Control Module References for control module replacement, programming and setup.

© Copyright Chevrolet. All rights reserved

DTC P0601-P0604, P0606, or P062F - Fuel Pump Control Module

Diagnostic Instructions

- Perform the Diagnostic System Check - Vehicle prior to using this diagnostic procedure.
- Review Strategy Based Diagnosis for an overview of the diagnostic approach.
- Diagnostic Procedure Instructions provides an overview of each diagnostic category.

DTC Descriptors

DTC P0601: Control Module Read Only Memory (ROM)

DTC P0602: Control Module Not Programmed

DTC P0603: Control Module Long Term Memory Reset

DTC P0604: Control Module Random Access Memory (RAM)

DTC P0606: Control Module Internal Performance

DTC P062F: Control Module Long Term Memory Performance

Circuit/System Description

The internal fault detection is handled inside the fuel pump control module. No external circuits are involved.

Conditions for Running the DTC

The fuel pump control module runs the program to detect an internal fault when power up is commanded. The only requirements are voltage and ground. This program runs even if the voltage is out of the valid operating range.

Conditions for Setting the DTC

The fuel pump control module has detected an internal malfunction.

Action Taken When the DTC Sets

DTC P0601, P0602, P0603, P0604, P0606 and P062F are type A DTCs.

Conditions for Clearing the DTC

DTC P0601, P0602, P0603, P0604, P0606 and P062F are type A DTCs.

Reference Information

Schematic Reference

Engine Controls Schematics

Connector End View Reference

Component Connector End Views

Description and Operation

Fuel System Description

Electrical Information Reference

- Circuit Testing
- Connector Repairs
- Testing for Intermittent Conditions and Poor Connections
- Wiring Repairs

DTC Type Reference

Powertrain Diagnostic Trouble Code (DTC) Type Definitions

Scan Tool Reference

Control Module References for scan tool information

Circuit/System Verification

Note: This DTC may be stored as a history DTC without affecting the operation of the module. If stored only as a history DTC and not retrieved as a current DTC, do not replace the module.

1. Verify that DTC P0602 is not set.
   If the DTC is set, program the K27 fuel pump control module.
2. Verify that DTCs P0601, P0603, P0604, P0606, and P062F are not set.
   If the DTCs are set, program the K27 fuel pump control module. If the DTCs reset, replace the K27 fuel pump control module.

Repair Instructions

Perform the Diagnostic Repair Verification after completing the diagnostic procedure.

Control Module References for fuel pump control module replacement, programming and setup

© Copyright Chevrolet. All rights reserved

DTC P0628 or P0629

Diagnostic Instructions

- Perform the Diagnostic System Check - Vehicle prior to using this diagnostic procedure.
- Review Strategy Based Diagnosis for an overview of the diagnostic approach.
- Diagnostic Procedure Instructions provides an overview of each diagnostic category.

DTC Descriptors

DTC P0628: Fuel Pump Enable Circuit Low Voltage

DTC P0629: Fuel Pump Enable Circuit High Voltage

Diagnostic Fault Information

Circuit	Short to Ground	Open/High Resistance	Short to Voltage
Fuel Pump Enable	P0628, P069E, P0AC4	P0629, P069E, P0AC4	P0629, P069E

Circuit/System Description

The engine control module (ECM) provides ignition voltage to the fuel pump flow control module whenever the engine is cranking or running. The ECM enables the fuel pump flow control module as long as the engine is cranking or running, and ignition system reference pulses are received. While this enable voltage is being received, the fuel pump flow control module supplies a varying voltage to the fuel tank fuel pump module in order to maintain the desired fuel line pressure.

Conditions for Running the DTC

- The engine speed is greater than 0 RPM.
- The ignition voltage is greater than 11 V.
- The DTCs run continuously when the conditions above are met.

Conditions for Setting the DTC

The ECM detects that the commanded state of the driver and the actual state of the control circuit do not match for greater than 2.5 s.

Action Taken When the DTC Sets

DTCs P0628 and P0629 are Type B DTCs.

Conditions for Clearing the DTC

DTCs P0628 and P0629 are Type B DTCs.

Reference Information

Schematic Reference

Engine Controls Schematics

Connector End View Reference

Component Connector End Views

Description and Operation

Hybrid Modes of Operation Description

Electrical Information Reference

- Circuit Testing
- Connector Repairs
- Testing for Intermittent Conditions and Poor Connections
- Wiring Repairs

DTC Type Reference

Powertrain Diagnostic Trouble Code (DTC) Type Definitions

Scan Tool Reference

Control Module References for scan tool information

Circuit/System Verification

1. Attempt to start the engine. Observe the DTC information with a scan tool. DTC P0628 or P0629 should not set.
2. Vehicle in Service Mode, command the Fuel Pump Enable ON and OFF with a scan tool while observing the control circuit status parameters listed below:
   - Fuel Pump Enable Circuit Low Voltage Test Status
   - Fuel Pump Enable Circuit Open Test Status
   - Fuel Pump Enable Circuit High Voltage Test Status

   Each parameter should toggle between OK and Not Run or Not Run and OK.
3. Engine running, command the Fuel Pump Enable ON and OFF with a scan tool while observing the control circuit status parameters listed below:
   - Fuel Pump Enable Circuit Low Voltage Test Status
   - Fuel Pump Enable Circuit Open Test Status
   - Fuel Pump Enable Circuit High Voltage Test Status

   Each parameter should toggle between OK and Not Run or Not Run and OK.
4. Operate the vehicle within the Conditions for Running the DTC to verify the DTC does not reset. You may also operate the vehicle within the conditions that you observed from the Freeze Frame/Failure Records data.

Circuit/System Testing

1. Vehicle OFF, disconnect the K27 fuel pump control module harness connector.
2. Vehicle OFF, all systems OFF. It may take up to 2 minutes for all vehicle systems to power down. Test for 0 V on the enable circuit terminal 20.
   If greater than the specified value, test for a short to voltage on the enable circuit. If the circuit/connections test normal, replace the K20 ECM.
3. Vehicle in Service Mode, command the Fuel Pump Enable ON with a scan tool.
4. Test for B+ on the enable circuit terminal 20.
   If less than the specified range, test for a short to ground or an open/high resistance on the enable circuit. If the circuit/connections test normal, replace the K20 ECM.
5. If all circuits/connections test normal, replace the K27 fuel pump control module.

Repair Instructions

Perform the Diagnostic Repair Verification after completing the diagnostic procedure.

- Fuel Pump Flow Control Module Replacement
- Control Module References for ECM or fuel pump control module replacement, setup, and programming

&#169© Copyright Chevrolet. All rights reserved

DTC P0641 or P06A6 - Fuel Pump Control Module

Diagnostic Instructions

- Perform the Diagnostic System Check - Vehicle prior to using this diagnostic procedure.
- Review Strategy Based Diagnosis for an overview of the diagnostic approach.
- Diagnostic Procedure Instructions provides an overview of each diagnostic category.

DTC Descriptors

DTC P0641: 5 V Reference Circuit

DTC P06A6: 5 V Reference Performance

Diagnostic Fault Information

Circuit	Short to Ground	Open/High Resistance	Short to Voltage	Signal Performance
5 V Reference	P018C, P0641, P06A6	P018C	P018D, P0641, P06A6	P06A6
Signal	P018C	P018B, P018C	P018D	P018B
Low Reference	-	P0641, P06A6	-	P06A6

Circuit/System Description

The fuel pressure sensor is located on the fuel line. The fuel pressure sensor monitors the fuel pressure in the fuel line. The fuel pump control module monitors the voltage signal from the fuel pressure sensor.

Conditions for Running the DTC

The engine is running.

Conditions for Setting the DTC

The fuel pump control module detects that the fuel pressure 5 V reference is above or below a predetermined voltage threshold.

Action Taken When the DTC Sets

DTCs P0641 and P06A6 are Type A DTCs.

Conditions for Clearing the DTC

DTCs P0641 and P06A6 are Type A DTCs.

Diagnostic Aids

Using the Failure Records data may help locate an intermittent condition. If you cannot duplicate the DTC, the information in the Failure Records can help determine how many miles since the DTC set. The Fail Counter and Pass Counter can help determine how many ignition cycles that the diagnostic test reported a pass and/or a fail.

Reference Information

Schematic Reference

Engine Controls Schematics

Connector End View Reference

Component Connector End Views

Description and Operation

Fuel System Description

Electrical Information Reference

- Circuit Testing
- Connector Repairs
- Testing for Intermittent Conditions and Poor Connections
- Wiring Repairs

DTC Type Reference

Powertrain Diagnostic Trouble Code (DTC) Type Definitions

Scan Tool Reference

Control Module References for scan tool information

Circuit/System Testing

1. Vehicle OFF, disconnect harness connector of the B47 fuel pressure sensor.
2. Vehicle OFF, test for less than 1.0 Ω between the low reference circuit terminal 2 and ground.
   If greater than the specified range, test the low reference circuit for an open/high resistance. If the circuit tests normal, replace the K27 fuel pump control module.
3. Vehicle in Service Mode, test for 4.8-5.2 V between the 5 V reference circuit terminal 3 and ground.
   If less than the specified range, test the 5 V reference circuit for a short to ground or an open/high resistance. If the circuit tests normal, replace the K27 fuel pump control module.
   If greater than the specified range, test the 5 V reference circuit for a short to voltage. If the circuit tests normal, replace the K27 fuel pump control module.
4. If all circuits test normal, replace the B47 fuel pressure sensor.

Repair Instructions

Perform the Diagnostic Repair Verification after completing the repair.

- Fuel Pressure Sensor Replacement - Fuel Feed Pipe
- Control Module References for fuel pump control module replacement, programming and setup

© Copyright Chevrolet. All rights reserved

DTC P0641, P0651, P0697, or P06A3 - ECM

Diagnostic Instructions

- Perform the Diagnostic System Check - Vehicle prior to using this diagnostic procedure.
- Review Strategy Based Diagnosis for an overview of the diagnostic approach.
- Diagnostic Procedure Instructions provides an overview of each diagnostic category.

DTC Descriptors

DTC P0641: 5V Reference 1 Circuit

DTC P0651: 5V Reference 2 Circuit

DTC P0697: 5V Reference 3 Circuit

DTC P06A3: 5V Reference 4 Circuit

Circuit/System Description

The engine control module (ECM) has four internal 5 V reference circuits. Each internal reference circuit provides external 5 V reference circuits for more than one sensor. A short to ground or short to voltage on one external 5 V reference circuit can affect all components connected to the same internal 5 V reference circuit.

Conditions for Running the DTC

DTCs P0641, P0651, P0697, and P06A3 run continuously when the ignition voltage is greater than 6.4 V.

Conditions for Setting the DTC

The ECM detects a voltage out of tolerance condition on the 5 V reference 1, 2, 3, or 4 circuit for less than 1 s.

Action Taken When the DTC Sets

DTCs P0641, P0651, P0697, and P06A3 are Type A DTCs.

Conditions for Clearing the DTC

DTCs P0641, P0651, P0697, and P06A3 are Type A DTCs.

Diagnostic Aids

P0641

The 5 V reference 1 circuit provides 5 V to the following sensors:

- The exhaust camshaft position sensor
- The intake camshaft position sensor
- The A/C refrigerant pressure sensor
- The fuel tank pressure sensor

P0651

The 5 V reference 2 circuit provides 5 V to the following sensors:

- The crankshaft position sensor
- The evaporative emission system leak detection pump assembly

P0697

The 5 V reference 3 circuit provides 5 V to the following sensors:

- The accelerator pedal position (APP) sensor 2
- The manifold absolute pressure (MAP) sensor

P06A3

The 5 V reference 4 circuit provides 5 V to the following sensors:

- The accelerator pedal position (APP) sensor 1
- The throttle body throttle position sensors 1 and 2

It may be possible to locate the fault by disconnecting one component at a time from the appropriate 5 V reference circuit while viewing the corresponding 5-volt Reference 1-4 Circuit Status parameter on the scan tool. The scan tool parameter will change from Malfunction to OK when the source of the fault is disconnected. If all 5 V reference

components have been disconnected and a fault is still indicated, the fault may exist in the wiring harness.

Reference Information

Schematic Reference

Engine Controls Schematics

Connector End View Reference

Component Connector End Views

Description and Operation

Hybrid Modes of Operation Description

Electrical Information Reference

- Circuit Testing
- Connector Repairs
- Testing for Intermittent Conditions and Poor Connections
- Wiring Repairs

DTC Type Reference

Powertrain Diagnostic Trouble Code (DTC) Type Definitions

Scan Tool Reference

Control Module References for scan tool information

Circuit/System Verification

1. Vehicle in Service Mode, observe the DTC information with a scan tool. DTCs P0641, P0651, P0697, and P06A3 should not set.
2. Observe the circuit status parameters listed below:
   - 5 V Reference 1 Circuit Status
   - 5 V Reference 2 Circuit Status
   - 5 V Reference 3 Circuit Status

- 5 V Reference 4 Circuit Status

  Each parameter should display OK.

3. Operate the vehicle within the conditions for running the DTC to verify the DTC does not reset. You may also operate the vehicle within the conditions that you observed from the freeze frame/failure records data.

Circuit/System Testing

Note: Additional DTCs will set when disconnecting components

1. Vehicle OFF, disconnect the harness connector at all appropriate sensors for the applicable DTC. Refer to Diagnostic Aids.
2. Vehicle in Service Mode, test for 4.8-5.2 V between one of the 5 V reference circuits and ground.

   If less than the specified range, test for a short to ground on the 5 V reference circuit for each of the affected components. If all circuits test normal, replace the K20 ECM.

   If greater than the specified range, test for a short to voltage on the 5 V reference circuit for each of the affected components. If all circuits test normal, replace the K20 ECM.

   Note: A short to voltage on the signal circuit of certain components may cause this DTC to set.

3. Connect each component associated with the 5 V reference circuit one at a time while monitoring the appropriate scan tool 5 V Reference 1, 2, 3, or 4 parameter. The voltage should display 4.8-5.2 V.

   If not within the specified range when a component is connected, test the signal circuit of the component for a short to voltage. If the circuit tests normal, replace the component.

Repair Instructions

Perform the Diagnostic Repair Verification after completing the diagnostic procedure.

- Accelerator Pedal Position Sensor Replacement
- Air Conditioning Refrigerant Pressure Sensor Replacement - High Pressure
- Air Conditioning Refrigerant Pressure Sensor Replacement - Low Pressure
- Camshaft Position Sensor Replacement : Intake → Exhaust
- Crankshaft Position Sensor Replacement
- Evaporative Emission System Vacuum Leak Detection Pump Replacement
- Fuel Tank Pressure Sensor Replacement
- Manifold Absolute Pressure Sensor Replacement
- Throttle Body Assembly Replacement
- Control Module References for replacement, setup, and programming.

© Copyright Chevrolet. All rights reserved

DTC P0650

Diagnostic Instructions

- Perform the Diagnostic System Check - Vehicle prior to using this diagnostic procedure.
- Review Strategy Based Diagnosis for an overview of the diagnostic approach.
- Diagnostic Procedure Instructions provides an overview of each diagnostic category.

DTC Descriptor

DTC P0650: Malfunction Indicator Lamp (MIL) Control Circuit

Diagnostic Fault Information

Circuit	Short to Ground	Open/High Resistance	Short to Voltage	Signal Performance
Ignition Voltage	P0650	P0650	-	-
MIL Control	P0650/MIL ON	P0650	P0650	-

Circuit/System Description

The malfunction indicator lamp (MIL) illuminates to inform the driver that an emission system fault has occurred and the engine control system requires service. Ignition voltage is supplied directly to the MIL and, when the emission system fault occurs, the engine control module (ECM) turns the MIL ON by grounding the MIL control circuit. Under normal operating conditions, the MIL should be ON only when the vehicle is ON and the engine is OFF.

Conditions for Running the DTC

- The vehicle is ON or the engine is running.
- Ignition voltage is greater than 11 V.
- The DTC runs continuously when the above conditions are met.

Conditions for Setting the DTC

The ECM detects that the commanded state of the MIL driver and the actual state of the control circuit do not match for greater than 5 s.

Action Taken When the DTC Sets

DTC P0650 is a Type B DTC, with no MIL request.

Conditions for Clearing the DTC

DTC P0650 is a Type B DTC, with no MIL request.

Diagnostic Aids

If the condition is intermittent, move the related harnesses and connectors with the Vehicle in Service Mode, and with the engine running while monitoring the scan tool MIL control circuit status parameters. The MIL control circuit status parameters will change from OK or Not Run to Malfunction if there is a condition with the circuit or a connection.

Reference Information

Schematic Reference

- Engine Controls Schematics
- Instrument Cluster Schematics

Connector End View Reference

Component Connector End Views

Description and Operation

Hybrid Modes of Operation Description

Electrical Information Reference

- Circuit Testing
- Connector Repairs
- Testing for Intermittent Conditions and Poor Connections
- Wiring Repairs

DTC Type Reference

Powertrain Diagnostic Trouble Code (DTC) Type Definitions

Scan Tool Reference

Control Module References for scan tool information

Circuit/System Verification

1. Engine running, command the MIL ON and OFF with a scan tool. The MIL should turn ON and OFF as commanded.
2. Command the MIL ON and OFF with a scan tool while observing the control circuit status parameters listed below:
   - MIL Control Circuit Low Voltage Test Status
   - MIL Control Circuit Open Test Status
   - MIL Control Circuit High Voltage Test Status

   Each parameter should display OK or Not Run.
3. Vehicle in Service Mode, command the MIL ON and OFF with a scan tool while observing the control circuit status parameters listed below:
   - MIL Control Circuit Low Voltage Test Status
   - MIL Control Circuit Open Test Status
   - MIL Control Circuit High Voltage Test Status

   Each parameter should display OK or Not Run.
4. Operate the vehicle within the conditions for running the DTC to verify the DTC does not reset. You may also operate the vehicle within the conditions you observed from the Freeze Frame/Failure Records data.

Circuit/System Testing

1. Vehicle in Service Mode, verify that the P16 instrument cluster warning indicators are illuminated.
   If the P16 instrument cluster indicators are not illuminated, test the ignition circuit terminal 31 for a short to ground or an open/high resistance. If the circuit tests normal and the ignition circuit fuse is open, replace the P16 instrument cluster.
2. Vehicle OFF, disconnect the harness connector X1 at the K20 engine control module.
3. Vehicle in Service Mode, observe the MIL. The MIL should not illuminate.
   If the MIL is illuminated, test the control circuit terminal 52 X1 for a short to ground. If the circuit tests normal, replace the P16 instrument cluster.
4. Connect a 3 A fused jumper wire between the control circuit terminal 52 X1 and ground. The MIL should illuminate.
   If the MIL does not illuminate, test the control circuit for a short to voltage or an open/high resistance. If the circuit tests normal, replace the K20 engine control module.

Repair Instructions

Perform the Diagnostic Repair Verification after completing the diagnostic procedure.

- Instrument Cluster Replacement
- Control Module References for ECM replacement, setup, and programming

&#169© Copyright Chevrolet. All rights reserved

DTC P0685, P0689, P0690, or P1682

Diagnostic Instructions

- Perform the Diagnostic System Check - Vehicle prior to using this diagnostic procedure.
- Review Strategy Based Diagnosis for an overview of the diagnostic approach.
- Diagnostic Procedure Instructions provides an overview of each diagnostic category.

DTC Descriptors

DTC P0685: Engine Controls Ignition Relay Control Circuit

DTCP0689: Engine Controls Ignition Relay Feedback Circuit Low Voltage

DTC P0690: Engine Controls Ignition Relay Feedback Circuit High Voltage

DTC P1682: Ignition 1 Switch Circuit 2

Diagnostic Fault Information

Powertrain Relay

Circuit	Short to Ground	Open/High Resistance	Short to Voltage
Relay Control Circuit	C0242, P0690, P1682	C0242, P0102, P0141, P0598, P0689, P0AB9, P0AC4, P1682	C0242, P0102, P0135, P0141, P0598, P0685, P0689, P0AB9, P0AC4, P1682, U0168
Relay Feedback Circuit	C0242, P0689, P1682	C0242, P0689, P1682	P0690

Run/Crank Relay

Circuit	Short to Ground	Open/High Resistance	Short to Voltage

Ignition 1 Signal	C0848, C1241, P0335* , P0700, P0AB9, P2535*, P2535**, P2535***, P2537, U0100, U1818, U1861	C0848, C1241, P0335*, P0700, P0AB9, P2535*, P2535**, P2535***, P2537, U0100, U1818, U1861	1
1. Engine continues to operate with Vehicle OFF. * Hybrid powertrain control module DTC ** Transmission control module DTC *** Hybrid powertrain control module 2 DTC			

Typical Scan Tool Data

Engine Controls Ignition Relay Control Circuit Open, Low Voltage, High Voltage Test Status--Component Commanded OFF, Vehicle OFF

Circuit	Short to Ground	Open	Short to Voltage
Operating Conditions: Component commanded OFF and Vehicle OFF. ***Parameter Normal Range:*** The following illustrates the normal parameter state with no circuit conditions: • Component OFF - OK for Open/Low Voltage Test Status and Not Run for High Voltage Test Status • Component ON - Not Run for Open/Low Voltage Test Status and OK for High Voltage Test Status			
Battery Voltage	-	Malfunction	-
Engine Controls Ignition Relay Control Circuit	Malfunction	Malfunction	Not Run

Engine Controls Ignition Relay Control Circuit Open, Low Voltage, High Voltage Test Status--Component Commanded ON

Circuit	Short to Ground	Open	Short to Voltage
Operating Conditions: Component commanded ON ***Parameter Normal Range:*** The following illustrates the normal parameter state with no circuit conditions: • Component OFF - OK for Open/Low Voltage Test Status and Not Run for High Voltage Test Status • Component ON - Not Run for Open/Low Voltage Test Status and OK for High Voltage Test Status			
Battery Voltage	-	Not Run	-
Engine Controls Ignition Relay Control Circuit	Not Run	Not Run	Malfunction

Circuit/System Description

There are 2 ignition voltage circuits supplied to the engine control module (ECM). One is supplied by the powertrain relay, or EC ignition relay, and the other is supplied by the

Run/Crank relay. The ECM monitors and compares the ignition voltage supplied by the 2 relays.

Conditions for Running the DTC

P0685

- The vehicle is ON.
- The ignition voltage is greater than 11 V.
- The DTC runs continuously when the above conditions are met.

P0689

- DTC P0685 is not set.
- The powertrain relay is commanded on.
- The ignition voltage is greater than 11 V.
- The DTC runs continuously when the above conditions are met.

P0690

- DTC P0685 is not set.
- The powertrain relay is commanded on.
- The DTC runs continuously when the above conditions are met.

P1682

- The powertrain relay is commanded on.
- The ignition voltage is greater than 5.5 V.
- The DTC runs continuously when the above conditions are met.

Conditions for Setting the DTC

P0685

The ECM detects that the commanded state of the driver and the actual state of the control circuit do not match for greater than 2 s.

P0689

The ECM detects the engine controls ignition relay feedback circuit is less than 5 V when the powertrain relay is commanded ON.

P0690

- The ECM detects the engine controls ignition relay feedback circuit is greater than 2 V when the powertrain relay is commanded OFF.
- The condition is present for greater than 4 s.

P1682

The ECM detects that the voltage level difference is greater than 3 V between the 2 ignition voltage circuits for less than 1 s.

Action Taken When the DTC Sets

P0685, P0690

- DTCs P0685 and P0690 are Type B DTCs.
- A message centre displays Propulsion Power is Reduced.
- Under certain conditions, the ECM commands the engine OFF.

P0689

- DTC P0689 is a Type C DTC.
- A message centre displays Propulsion Power is Reduced.
- Under certain conditions, the ECM commands the engine OFF.

P1682

- DTC P1682 is a Type A DTC.
- A message centre displays Propulsion Power is Reduced.
- Under certain conditions, the ECM commands the engine OFF.

Conditions for Clearing the DTC

- DTCs P0685 and P0690 are Type B DTCs.
- DTC P0689 is a Type C DTC.
- DTC P1682 is a Type A DTC.

Reference Information

Schematic Reference

- Engine Controls Schematics
- Power Distribution Schematics

Connector End View Reference

Component Connector End Views

Description and Operation

Hybrid Modes of Operation Description

Electrical Information Reference

- Circuit Testing
- Connector Repairs
- Electrical Centre Identification Views
- Testing for Intermittent Conditions and Poor Connections
- Wiring Repairs

DTC Type Reference

Powertrain Diagnostic Trouble Code (DTC) Type Definitions

Scan Tool Reference

Control Module References for scan tool information

Circuit/System Verification

Note:

- A short to voltage on a power feed circuit for another component may cause DTC P0690 to set. If any other DTC is set, diagnose that DTC first.
- If you were sent here from Engine Cranks But Does Not Run, proceed to Circuit/System Testing.

1. Vehicle in Service Mode, observe the DTC information with a scan tool. Verify no other DTCs are set.
   If a DTC is set, refer to Diagnostic Trouble Code (DTC) List - Vehicle for further diagnosis.
2. Command the Engine Controls Ignition Relay ON and OFF with a scan tool while observing the following parameters:

- Engine Controls Ignition Relay Control Circuit Low Voltage Test Status
- Engine Controls Ignition Relay Control Circuit Open Test Status
- Engine Controls Ignition Relay Control Circuit High Voltage Test Status

  Each parameter should display OK or Not Run in each commanded state.

3. Observe the scan tool DTC information. DTC P0685, P0689, P0690, or P1682 should not set.
4. Operate the vehicle within the conditions for running the DTC to verify the DTC does not reset. You may also operate the vehicle within the conditions that you observed from the freeze frame/failure records data.

Circuit/System Testing

Note: You must perform the Circuit/System Verification before proceeding with Circuit/System Testing unless sent here from Engine Cranks But Does Not Run.

1. Vehicle OFF, disconnect the KR75 powertrain relay.
2. Verify a test lamp illuminates between ground and the relay circuit terminals listed below:
   - Terminal 86
   - Terminal 30

   If the test lamp does not illuminate, test the relay battery voltage circuit for an open/high resistance.

   Note: High resistance in the circuit/underhood fuse block for either the powertrain relay or the run/crank relay can cause DTC P1682 to set.

3. Vehicle in Service Mode, verify that a test lamp does not illuminate between the ignition voltage circuit terminal 87 and ground.
   If the test lamp illuminates, test the ignition voltage circuit for a short to voltage.
4. Connect a 20 A fused jumper wire between the relay switch B+ circuit terminal 30 and the relay switch ignition voltage circuit terminal 87.
5. Observe the scan tool Engine Controls Ignition Relay Feedback Signal parameter. The ECM should communicate, and the parameter should display B+.
   If not the specified value, or the ECM does not communicate, test the ignition voltage circuit between the powertrain relay and the ECM for a short to ground or for an open circuit/high resistance. If the circuit/connections test normal, replace the K20 ECM.
6. Vehicle OFF, connect a DMM set to the diode setting between control circuit terminal 85 and ground. Verify the DMM displays OL.
   If not the specified value, test the control circuit for a short to ground. If the circuit tests normal, replace the K20 ECM.
7. Vehicle in Service Mode, verify the DMM displays less than 1 V.
   If not within the specified range, test the control circuit terminal 85 for a short to voltage or an open/high resistance. If the circuit tests normal, replace the K20 ECM.
8. If all circuits test normal, replace the KR75 powertrain relay.

Component Testing

1. Vehicle OFF, disconnect the KR75 powertrain relay.
2. Test for 70-110 Ω between terminals 85 and 86 of the KR75 powertrain relay.
   If not within the specified range, replace the KR75 powertrain relay.
3. Test for infinite resistance between the following terminals of the KR75 powertrain relay:

- 30 and 86
- 30 and 87
- 30 and 85
- 85 and 87

  If not the specified value, replace the KR75 powertrain relay.

4. Install a 20 A fused jumper wire between relay terminal 85 and 12 V. Install a jumper wire between relay terminal 86 and ground. Test for less than 2 Ω between terminals 30 and 87.
   If greater than the specified range, replace the KR75 powertrain relay.

Repair Instructions

Perform the Diagnostic Repair Verification after completing the diagnostic procedure.

- Relay Replacement : Within an Electrical Centre → Attached to Wire Harness
- Control Module References for ECM replacement, setup, and programming

&#169© Copyright Chevrolet. All rights reserved

DTC P069E

Diagnostic Instructions

- Perform the Diagnostic System Check - Vehicle prior to using this diagnostic procedure.
- Review Strategy Based Diagnosis for an overview of the diagnostic approach.
- Diagnostic Procedure Instructions provides an overview of each diagnostic category.

DTC Descriptor

DTC P069E: Fuel Pump Control Module Requested MIL Illumination

Circuit/System Description

The fuel pump control module uses the serial data network to signal the engine control module (ECM) that the fuel pump control module is requesting malfunction indicator lamp (MIL) illumination. A DTC is set in the fuel pump control module, and the request for MIL illumination is sent when the fuel pump control module determines that a failure that affects emissions has occurred in the fuel pump control system. When the ECM receives the message from the fuel pump control module, DTC P069E will set in the ECM.

Conditions for Running the DTC

- Vehicle ON for greater than 3 s.
- DTC P069E runs continuously when the above condition is met.

Conditions for Setting the DTC

The fuel pump control module requests the ECM to illuminate the MIL.

Action Taken When the DTC Sets

DTC P069E is a Type A DTC.

Conditions for Clearing the DTC

DTC P069E is a Type A DTC.

Reference Information

Description and Operation

Hybrid Modes of Operation Description

DTC Type Reference

Powertrain Diagnostic Trouble Code (DTC) Type Definitions

Scan Tool Reference

Control Module References for scan tool information

Circuit/System Verification

Note: Correct any engine control DTCs before diagnosing fuel pump control module DTCs.

1. DTC P069E is an informational DTC. If there are no engine control DTCs set, refer to Diagnostic Trouble Code (DTC) List - Vehicle for diagnosis of fuel pump control module DTCs.
2. Operate the vehicle within the Conditions for Running the DTC to verify the DTC does not reset. You may also operate the vehicle within the conditions that you observed from the Freeze Frame/Failure Records data.

Repair Instructions

Perform the Diagnostic Repair Verification after completing the diagnostic procedure.

&#169© Copyright Chevrolet. All rights reserved

DTC P0700

Diagnostic Instructions

- Perform the Diagnostic System Check - Vehicle prior to using this diagnostic procedure.
- Review Strategy Based Diagnosis for an overview of the diagnostic approach.
- Diagnostic Procedure Instructions provides an overview of each diagnostic category.

DTC Descriptor

DTC P0700: Transmission Control Module Requested MIL Illumination

Circuit/System Description

This DTC indicates that an emission related transmission DTC has set in the transmission control module (TCM). The engine control module (ECM) receives the TCM information over the serial data circuit. The ECM illuminates the malfunction indicator lamp (MIL) when the TCM sends a message over the serial data circuit requesting MIL illumination. The DTC information for the ECM will only display DTC P0700, but the freeze frame/failure records data may display the transmission DTC that set.

Conditions for Running the DTC

- Vehicle ON for greater than 3 s.
- DTC P0700 runs continuously when the above condition is met.

Conditions for Setting the DTC

The TCM has set an emissions related DTC.

Action Taken When the DTC Sets

DTC P0700 is a Type A DTC.

Conditions for Clearing the DTC

DTC P0700 is a Type A DTC.

Reference Information

Description and Operation

- Hybrid Modes of Operation Description
- Transmission General Description

DTC Type Reference

Powertrain Diagnostic Trouble Code (DTC) Type Definitions

Scan Tool Reference

Control Module References for scan tool information

Circuit/System Verification

Note: : Correct any engine control DTCs before diagnosing TCM DTCs.

1. DTC P0700 is an informational DTC. If there are no other engine control DTCs set, refer to Diagnostic Trouble Code (DTC) List - Vehicle for diagnosis of TCM DTCs.
2. Operate the vehicle within the Conditions for Running the DTC to verify the DTC does not reset. You may also operate the vehicle within the conditions that you observed from the Freeze Frame/Failure Records data.

Repair Instructions

Perform the Diagnostic Repair Verification after completing the diagnostic procedure.

&#169© Copyright Chevrolet. All rights reserved

DTC P0AC4

Diagnostic Instructions

- Perform the Diagnostic System Check - Vehicle prior to using this diagnostic procedure.
- Review Strategy Based Diagnosis for an overview of the diagnostic approach.
- Diagnostic Procedure Instructions provides an overview of each diagnostic category.

DTC Descriptor

DTC P0AC4: Hybrid Powertrain Control Module Requested MIL Illumination

Circuit/System Description

This DTC indicates the hybrid powertrain control module has set an emission related hybrid powertrain DTC. The hybrid powertrain control module sends a message via the serial data circuit to the engine control module (ECM) requesting illumination of the malfunction indicator lamp (MIL). When the ECM receives the message, DTC P0AC4 will set. The DTC information for the ECM will only display DTC P0AC4, but the freeze frame/failure records data may display the hybrid powertrain DTC that set.

Conditions for Running the DTC

- Vehicle ON for greater than 3 s.
- DTC P0AC4 runs continuously when the above condition is met.

Conditions for Setting the DTC

The hybrid powertrain control module has set an emission related DTC.

Action Taken When the DTC Sets

DTC P0AC4 is a Type A DTC.

Conditions for Clearing the DTC

DTC P0AC4 is a Type A DTC.

Reference Information

Description and Operation

Hybrid Modes of Operation Description

DTC Type Reference

Powertrain Diagnostic Trouble Code (DTC) Type Definitions

Scan Tool Reference

Control Module References for scan tool information

Circuit/System Verification

Note: Correct any engine control DTCs before diagnosing hybrid powertrain control module DTCs.

1. DTC P0AC4 is an informational DTC. If there are no other engine control DTCs set, refer to Diagnostic Trouble Code (DTC) List - Vehicle for diagnosis of hybrid powertrain control module DTCs.
2. Operate the vehicle within the Conditions for Running the DTC to verify the DTC does not reset. You may also operate the vehicle within the conditions that you observed from the Freeze Frame/Failure Records data.

Repair Instructions

Perform the Diagnostic Repair Verification after completing the diagnostic procedure.

&#169© Copyright Chevrolet. All rights reserved

DTC P1101

Diagnostic Instructions

- Perform the Diagnostic System Check - Vehicle prior to using this diagnostic procedure.
- Review Strategy Based Diagnosis for an overview of the diagnostic approach.
- Diagnostic Procedure Instructions provides an overview of each diagnostic category.

DTC Descriptors

DTC P1101: Inlet Air Flow System Performance

Diagnostic Fault Information

Circuit	Short to Ground	High Resistance	Open	Short to Voltage	Signal Performance
Ignition Voltage	P0102, P121B	P0101, P0102	P0102	P0690	P0101
MAF Sensor Signal	P0102	P0102	P0101, P0102	P0102	P0101, P1101
MAF Control	P0101, P121B	P0101, P0102	P0101, P0102	P0101, P0102, P121C	-

Typical Scan Tool Data

MAF Sensor

Circuit	Short to Ground	Open	Short to Voltage
Operating Conditions: Vehicle ON, normal operating temperature and engine speed between 1,375 and 1,425 RPM ***Parameter Normal Range:*** 1,800-2,400 Hz			
Ignition Voltage	0 Hz	0 Hz	-
MAF Sensor Signal	0 Hz	0 Hz	0 Hz
MAF Control	-	0 Hz	-

Circuit/System Description

The mass air flow (MAF) sensor is integrated with the inlet air temperature (IAT) sensor. The MAF sensor is an air flow meter that measures the amount of air entering the engine. The engine control module (ECM) uses the MAF sensor signal to provide the correct fuel delivery for all engine speeds and loads. The air flow and engine speed are very dependent on the battery pack state of charge. A small quantity of air entering the engine indicates a low load condition. A large quantity of air entering the engine indicates a high load condition.

The ECM applies 5 volts to the MAF sensor on the MAF sensor signal circuit. The sensor uses the voltage to produce a frequency based on the inlet air flow through the sensor bore.

The MAF sensor is supplied power through the powertrain relay and a fuse. The ECM enables the MAF sensor only during engine run mode by grounding the MAF control circuit via a solid state devise called a driver. The ECM monitors the status of the driver. If the ECM detects an incorrect voltage for the commanded state of the driver, a MAF sensor supply voltage control circuit DTC is set.

Conditions for Running the DTC

- DTCs P0102, P0103, P0107, P0108, P0111, P0112, P0113, P0114, P0116, P0117, P0118, P0119, P0128, P0335, and P0336 are not set.
- The engine speed is between 500 and 8,000 RPM.
- The IAT Sensor is between -20 and +125°C (-4 and +257°F).
- The ECT Sensor is between -7 and +125°C (+19 and +257°F).
- This DTC runs continuously within the enabling conditions.

Action Taken When the DTC Sets

DTC P1101 is a Type B DTC.

Conditions for Clearing the MIL/DTC

DTC P1101 is a Type B DTC.

Diagnostic Aids

- A steady or intermittent high resistance of 15 Ω or greater on the ignition voltage circuit will cause the MAF sensor signal to be increased by as much as 60 g/s. To pinpoint this condition perform a voltage drop test on the circuit.
- Any type of contamination on the MAF sensor heating elements will degrade the proper operation of the sensor. Certain types of contaminants act as a heat insulator, which will impair the response of the sensor to airflow changes. Water or snow can create the opposite effect, and cause the signal to increase rapidly.
- Depending on the current ambient temperature, and the vehicle operating conditions, a MAF sensor signal circuit that is shorted to the IAT signal circuit will increase or decrease the MAF sensor signal that is interpreted by the ECM. Additionally it may cause a rapid fluctuation in the IAT Sensor parameter.
- Certain aftermarket air filters may cause this DTC to set.
- Certain aftermarket air induction systems may cause this DTC to set.
- Modifications to the air induction system may cause this DTC to set.

Reference Information

Schematic Reference

Engine Controls Schematics

Connector End View Reference

Component Connector End Views

Description and Operation

Hybrid Modes of Operation Description

Electrical Information Reference

- Circuit Testing
- Connector Repairs
- Testing for Intermittent Conditions and Poor Connections
- Wiring Repairs

DTC Type Reference

Powertrain Diagnostic Trouble Code (DTC) Type Definitions

Scan Tool Reference

Control Module References for scan tool information

Special Tools

J 38522 Variable Signal Generator.

For equivalent regional tools, refer to Special Tools : Diagnostic Tools .

Circuit/System Verification

Note: To ensure a proper engine load, this diagnostic should be performed when the Hybrid/EV Battery Pack Charge Remaning parameter is at least 40%.

1. Vehicle in Service Mode, observe the DTC information with a scan tool. Verify that DTC P0697 is not set.
   If DTC P0697 is set, refer to DTC P0641, P0651, P0697, or P06A3 : ECM , for further diagnosis.
2. Observe the scan tool MAP Sensor pressure parameter and compare to the Altitude Versus Barometric Pressure table. The MAP sensor reading should be within the specified range.
   If not within the specified range, refer to DTC P0106 , for further diagnosis.
3. Vehicle ON, engine speed between 1,375 and 1,425 RPM, normal operating temperature. Verify the scan tool MAF Sensor parameter is between 1,800 and 2,400 Hz.
4. Operate the vehicle within the conditions for running the DTC to verify the DTC does not reset. You may also operate the vehicle within the conditions that you observed from the freeze frame/failure records data.

Circuit/System Testing

1. Verify the following conditions do not exist:
   - A dirty, restricted, or deteriorating air filter element
   - A leaking, loose, or cracked PCV pipe or seal
   - A restricted or collapsed air inlet duct
   - A misaligned, leaking, or damaged air inlet duct
   - Any objects blocking the air inlet probe of the B75B mass air flow/inlet air temperature sensor
   - Any contamination or debris on the sensing elements in the probe of the B75B mass air flow/inlet air temperature sensor
   - A cracked, damaged, or leaking B75B mass air flow/inlet air temperature sensor housing
   - Any water intrusion in the induction system
   - Any snow or ice build-up at the air cleaner or B75B mass air flow/inlet air temperature sensor in cold climates
   - Any vacuum leak
   - A B74 MAP sensor seal that is leaking, missing, or damaged
   - Q38 Throttle body for dirt, debris, and coking. Refer to Throttle Body Inspection and Cleaning .
   - A damaged Q38 throttle body blade or shaft
   - Missing, restricted, or leaking exhaust components. Refer to Symptoms - Engine Exhaust .

   If you find any of the above conditions, repair as necessary.
2. Vehicle OFF, disconnect the harness connector at the B75B mass air flow/inlet air temperature sensor.
3. Vehicle in Service Mode, test for 4.8-5.2 V between the signal circuit terminal 5 and ground.
   If less than the specified range, test the signal circuit for a short to ground or an open/high resistance. If the circuit tests normal, replace the K20 ECM.
   If greater than the specified range, test the signal circuit for a short to voltage. If the circuit tests normal, replace the K20 ECM.
4. Verify that a test lamp illuminates between the ignition voltage circuit terminal 4 and ground.
   If the test lamp does not illuminate, test the ignition voltage circuit for a short to ground or an open/high resistance. If the circuit tests normal and the ignition voltage circuit fuse is open, test or replace the components on the ignition voltage circuit.
5. Connect the test lamp between the MAF control circuit terminal 2 and the ignition voltage circuit terminal 4.
6. Vehicle in Service Mode, command the MAF Sensor Supply Voltage Low Side Driver ON and OFF with a scan tool. The test lamp should turn ON and OFF when

changing between the commanded states.
If the test lamp is always ON, test the control circuit for a short to ground. If the circuit tests normal, replace the K20 ECM.
If the test lamp is always OFF, test the control circuit for a short to voltage or an open/high resistance. If the circuit tests normal, replace the K20 ECM.

7. Vehicle OFF, connect the red lead of the J 38522 to the signal circuit terminal 5 at the harness connector. Connect the battery voltage supply to B+, and the black lead to ground.
8. Set the J 38522 to the following specifications.
   - Signal switch to 5 V
   - Frequency switch to 5 KHz
   - Duty Cycle switch to Normal

   Note: The engine may run rough and stall.

9. Engine running, observe the scan tool MAF Sensor Hz parameter. The parameter should be between 4,950 and 5,025 Hz.
   If not within the specified range, replace the K20 ECM.
10. If all circuits test normal, test or replace the B75B mass air flow/inlet air temperature sensor.

Repair Instructions

Perform the Diagnostic Repair Verification after completing the diagnostic procedure.

- Air Cleaner Element Replacement
- Mass Airflow Sensor with Inlet Air Temperature Sensor Replacement
- Throttle Body Assembly Replacement
- Control Module References for ECM replacement, setup, and programming

&#169© Copyright Chevrolet. All rights reserved

DTC P121B or P121C

Diagnostic Instructions

- Perform the Diagnostic System Check - Vehicle prior to using this diagnostic procedure.
- Review Strategy Based Diagnosis for an overview of the diagnostic approach.
- Diagnostic Procedure Instructions provides an overview of each diagnostic category.

DTC Descriptors

DTC P121B: Mass Air Flow (MAF) Sensor Supply Voltage Control Circuit Low

DTC P121C: Mass Air Flow (MAF) Sensor Supply Voltage Control Circuit High

Diagnostic Fault Information

Circuit	Short to Ground	High Resistance	Open	Short to Voltage	Signal Performance
Ignition Voltage	P0102, P121B	P0101, P0102	P0102	P0690	P0101
MAF Sensor Signal	P0102	P0102	P0101, P0102	P0102	P0101, P1101
MAF Control	P0101, P121B	P0101, P0102	P0101, P0102	P0101, P0102, P121C	-

Circuit/System Description

The mass air flow (MAF) sensor is integrated with the inlet air temperature (IAT) sensor. The MAF sensor is an air flow meter that measures the amount of air entering the engine. The engine control module (ECM) uses the MAF sensor signal to provide the correct fuel delivery for all engine speeds and loads. The air flow and engine speed are very dependent on the battery pack state of charge. A small quantity of air entering the engine indicates a low load condition. A large quantity of air entering the engine indicates a high load condition.

The ECM applies 5 volts to the MAF sensor on the MAF sensor signal circuit. The sensor uses the voltage to produce a frequency based on the inlet air flow through the sensor bore.

The MAF sensor is supplied power through the powertrain relay and a fuse. The ECM enables the MAF sensor only during engine run mode by grounding the MAF control

circuit via a solid state devise called a driver. The driver is equipped with a feedback circuit that is pulled-up to a voltage. The ECM monitors the status of the driver. If the ECM detects an incorrect voltage for the commanded state of the driver, a MAF sensor supply voltage low side driver control circuit DTC is set.

Conditions for Running the DTC

P121B

- Vehicle ON and the engine is not running.
- The DTC runs continuously when the above conditions are met for greater than 1 s.

P121C

- The engine is running.
- The DTC runs continuously when the above conditions are met for greater than 1 s.

Conditions for Setting the DTC

P121B

The ECM detects the commanded and actual states of the MAF control circuit do not match for greater than 4 s.

P121C

The ECM detects the commanded and actual states of the MAF control circuit do not match for greater than 4 s.

Action Taken When the DTC Sets

DTCs P121B and P121C are Type B DTCs.

Conditions for Clearing the MIL/DTC

DTCs P121B and P121C are Type B DTCs.

Reference Information

Schematic Reference

Engine Controls Schematics

Connector End View Reference

Component Connector End Views

Description and Operation

Hybrid Modes of Operation Description

Electrical Information Reference

- Circuit Testing
- Connector Repairs
- Testing for Intermittent Conditions and Poor Connections
- Wiring Repairs

DTC Type Reference

Powertrain Diagnostic Trouble Code (DTC) Type Definitions

Scan Tool Reference

Control Module References for scan tool information

Circuit/System Verification

1. Vehicle in Service Mode, observe the control circuit status parameters listed below with a scan tool:
   - MAF Sensor Supply Voltage Control Circuit Low Voltage Test Status
   - MAF Sensor Supply Voltage Control Circuit Open Test Status
   - MAF Sensor Supply Voltage Control Circuit High Voltage Test Status

   Each parameter should display OK or Not Run.
2. Engine running, observe the control circuit status parameters listed below with a scan tool:
   - MAF Sensor Supply Voltage Control Circuit Low Voltage Test Status
   - MAF Sensor Supply Voltage Control Circuit Open Test Status
   - MAF Sensor Supply Voltage Control Circuit High Voltage Test Status

   Each parameter should display OK or Not Run.
3. Operate the vehicle within the conditions for running the DTC to verify the DTC does not reset. You may also operate the vehicle within the conditions that you observed from the freeze frame/failure records data.

Circuit/System Testing

1. Vehicle OFF, disconnect the harness connector at the B75B mass air flow/inlet air temperature sensor.
2. Vehicle in Service Mode, verify that a test lamp illuminates between the ignition voltage circuit terminal 4 and ground.
   If the test lamp does not illuminate, test the ignition voltage circuit for a short to ground or an open/high resistance. If the circuit tests normal and the ignition voltage circuit fuse is open, test or replace the components on the ignition voltage circuit.
3. Connect the test lamp between the control circuit terminal 2 and the ignition voltage circuit terminal 4.
4. Vehicle in Service Mode. Command the MAF Sensor Supply Voltage Low Side Driver ON and OFF with a scan tool. The test lamp should turn ON and OFF when changing between the commanded states.
   If the test lamp is always ON, test the control circuit for a short to ground. If the circuit tests normal, replace the K20 ECM.
   If the test lamp is always OFF, test the control circuit for a short to voltage or an open/high resistance. If the circuit tests normal, replace the K20 ECM.
5. If all circuits test normal, test or replace the B75B mass air flow/inlet air temperature sensor.

Repair Instructions

Perform the Diagnostic Repair Verification after completing the diagnostic procedure.

- Mass Airflow Sensor with Inlet Air Temperature Sensor Replacement
- Control Module References for ECM replacement, setup, and programming

&#169© Copyright Chevrolet. All rights reserved

DTC P1255 or P064A

Diagnostic Instructions

- Perform the Diagnostic System Check - Vehicle prior to using this diagnostic procedure.
- Review Strategy Based Diagnosis for an overview of the diagnostic approach.
- Diagnostic Procedure Instructions provides an overview of each diagnostic category.

DTC Descriptors

DTC P064A: Fuel Pump Control Module Performance

DTC P1255: Fuel Pump Control Module Driver Over-temperature

Circuit/System Description

The engine control module (ECM) supplies voltage to the fuel pump control module when the ECM detects that the ignition is on. The voltage from the ECM to the fuel pump control module remains active for 2 seconds, unless the engine is in crank or run. While this voltage is being received, the fuel pump control module supplies a varying voltage to the fuel tank pump module in order to maintain the desired fuel rail pressure.

Conditions for Running the DTC

The engine is running.

Conditions for Setting the DTC

The fuel pump control module detects an over-temperature fault.

Action Taken When the DTC Sets

DTCs P064A and P1255 are Type A DTCs.

Conditions for Clearing the DTC

DTCs P064A and P1255 are Type A DTCs.

Diagnostic Aids

Using the Failure Records data may help locate an intermittent condition. If you cannot duplicate the DTC, the information in the Failure Records can help determine how many miles since the DTC set. The Fail Counter and Pass Counter can help determine how many ignition cycles that the diagnostic test reported a pass and/or a fail.

Reference Information

Schematic Reference

Engine Controls Schematics

Connector End View Reference

Component Connector End Views

Description and Operation

Fuel System Description

Electrical Information Reference

- Circuit Testing
- Connector Repairs
- Testing for Intermittent Conditions and Poor Connections
- Wiring Repairs

DTC Type Reference

Powertrain Diagnostic Trouble Code (DTC) Type Definitions

Scan Tool Reference

Control Module References for scan tool information

Circuit/System Testing

1. Verify that DTC P0231, P0232 or P023F are not set.
   If any of those codes are set, refer to Diagnostic Trouble Code (DTC) List - Vehicle .
2. Ensure that the entire undercarriage of the vehicle is clean, especially around the area where the K27 fuel pump control module is located. Clear all codes from the K27 fuel pump control module and test drive the vehicle. Verify that DTC P1255 or P064A do not set.
   If DTC P1255 or P064A reset, replace the K27 fuel pump control module.

Repair Instructions

Perform the Diagnostic Repair Verification after completing the diagnostic procedure.

Control Module References for fuel pump control module replacement, programming and setup

&#169© Copyright Chevrolet. All rights reserved

DTC P1400

Diagnostic Instructions

- Perform the Diagnostic System Check - Vehicle prior to using this diagnostic procedure.
- Review Strategy Based Diagnosis for an overview of the diagnostic approach.
- Diagnostic Procedure Instructions provide an overview of each diagnostic category.

DTC Descriptor

DTC P1400: Cold Start Emission Reduction Control System

Circuit/System Description

The catalyst must be warmed to efficiently reduce the emissions. The cold start strategy is to reduce the amount of time it takes to warm the catalyst. During a cold start, the engine spark timing is altered to allow the catalyst to warm quickly. This diagnostic monitors the following to build an exhaust energy model:

- Spark advance
- Engine airflow
- Engine coolant temperature
- Engine run time

The actual model is then compared to the expected exhaust energy model.

Conditions for Running the DTC

- DTCs P0101, P0102, P0103, P0106, P0107, P0108, P0112, P0113, P0114, P0116, P0117, P0118, P0121, P0122, P0123, P0201, P0202, P0203, P0204, P0222, P0223, P0300, P0301, P0302, P0303, P0304, P0335, P0336, P0351, P0352, P0353, P0354, P0641, P0651, P0697, P06A3, P2122, P2123, P2127, P2128, P2135, and P2138 are not set.
- The engine coolant temperature (ECT) sensor is greater than -10°C (14°F).
- The calculated 3-way catalyst temperature is less than 350°C (662°F).
- The engine control module (ECM) will exit the diagnostic if the calculated 3-way catalyst temperature is greater than 550°C (1022°F) when the engine run time is greater

than 30 s.
- The ECM will exit the diagnostic if the engine run time is greater than a calibrated value.
- This DTC runs within the first 15 s of start-up. This diagnostic runs once per trip when a cold start has been determined.

Conditions for Setting the DTC

The actual exhaust energy model does not match the expected exhaust energy model.

Action Taken When the DTC Sets

DTC P1400 is a Type A DTC.

Conditions for Clearing the DTC

DTC P1400 is a Type A DTC.

Reference Information

Description and Operation

Hybrid Modes of Operation Description

DTC Type Reference

Powertrain Diagnostic Trouble Code (DTC) Type Definitions

Scan Tool Reference

Control Module References for scan tool information

Circuit/System Verification

1. Vehicle OFF, allow the engine to cool to be within the temperatures listed in the Conditions for Running the DTC.
2. Engine running for at least 30 s, observe the scan tool DTC information. DTC P1400 should run and pass.
3. Operate the vehicle within the Conditions for Running the DTC to verify the DTC does not reset. You may also operate the vehicle within the conditions that you observed from the Freeze Frame/Failure Records data.

Circuit/System Testing

1. Verify that none of the conditions listed below exists with the air inlet system:
   - Damage, restriction, or modification
   - Dirty or deteriorating air filter element
   - Crankcase ventilation system for correct operation.
   - Water intrusion
   - Vacuum leak and other unmetered air downstream of the mass air flow (MAF) sensor
   - Intake manifold leak

   If a condition is found, repair as necessary.
2. Verify that none of the conditions listed below exists with the exhaust system:
   - Water intrusion
   - Exhaust leak
   - Damaged, restricted, or modified exhaust system - Refer to Symptoms - Engine Exhaust .

   If a condition is found, repair as necessary.
3. If all of the above conditions test normal, inspect for an engine mechanical condition that could alter the air flow into the combustion chamber. Refer to Symptoms - Engine Mechanical .

Repair Instructions

Perform the Diagnostic Repair Verification after completing the diagnostic procedure.

&#169© Copyright Chevrolet. All rights reserved

DTC P1458-P145A

Diagnostic Instructions

- Perform the Diagnostic System Check - Vehicle prior to using this diagnostic procedure.
- Review Strategy Based Diagnosis for an overview of the diagnostic approach.
- Diagnostic Procedure Instructions provides an overview of each diagnostic category.

DTC Descriptors

DTC P1458: Evaporative Emission (EVAP) System Leak Detection Pump Pressure Sensor Performance

DTC P1459: Evaporative Emission (EVAP) System Leak Detection Pump Pressure Sensor Circuit Low Voltage

DTC P145A: Evaporative Emission (EVAP) System Leak Detection Pump Pressure Sensor Circuit High Voltage

Circuit/System Description

The evaporative emission (EVAP) system uses a EVAP leak detection pump to test for system leaks. The EVAP leak detection pump assembly consists of three main components:

- EVAP leak detection pump with reference orifice
- EVAP leak detection pump switching valve
- EVAP leak detection pump pressure sensor

The EVAP leak detection pump pressure sensor performs a correlation to barometric pressure (BARO). After a short delay period, the EVAP leak detection pump pressure sensor, absolute, reading is compared to the BARO. Large deviations will increment the fail counter threshold and sets a P1458.

There are two different threshold calibrations used in the comparison to the BARO. A smaller threshold is used when there has been a recent BARO update and then a larger threshold value is used when there has not been a recent BARO update.

Conditions for Running the DTC

P1458

Condition 1:

- DTCs P043E, P043F, P0101, P0102, P0103, P0106, P0107, P0108, P0111, P0112, P0113, P0114, P0116, P0117, P0118, P0119, P0121, P0122, P0123, P0128, P145A, P145C, P145D, P145E, P145F, P012B, P012C, P012D, P0222, P0223, P0443, P0449, P0451, P0452, P0453, P0458, P0459, P0461, P0462, P0463, P0498, P0499, P0502, P0503, P06E4, P0722, P0723, P1221, P1458, P1459, P2066, P2067, P2068, P2400, P2401, P2402, P2418, P2419, P2420, P2421, P2422, P2450, P2537, P2610, U0073, U0074, U0140, U182D is not set.
- The barometric pressure (BARO) is between than 70-110 kPa (10-16 PSI).
- The fuel level is between 10-90%.
- The propulsion system is not active.
- The engine coolant temperature (ECT) is less than 40°C (104°F).
- The inlet air temperature (IAT) is between 4-45°C (39-113°F).
- The battery voltage is greater than 10 V.
- Vehicle speed is less than 1.6 km/h (1 MPH).
- No ignition key up during this test.
- No refuelling request button is pressed.
- A service bay test is not active.
- The device control exceeds 0.5 seconds
- There are three possible time windows for this test to run. Up to that point and through this time period the propulsion system must not be active. These time windows are: 5.0, 7.0 or 9.5 hours.

Condition 2:

- DTCs P0068, P0071, P0072, P0073, P0101, P0102, P0103, P0106, P0107, P0108, P010C, P010D, P0111, P0112, P0113, P0114, P0121, P0122, P0123, P012B, P012C, P012D, P0222, P0223, P0442, P0443, P0449, P0452, P0453, P0455, P0458, P0459, P0498, P0499, P0502, P0503, P0606, P0722, P0723, P16F3, P1104, P1221, P1458, P1459, P145A, P145D, P145E, P2100, P2101, P2102, P2103, P2400, P2401, P2402, P2418, P2419, P2420, P2422, P2450 is not set.
- The barometric pressure (BARO) is between 70-110 kPa (10-16 PSI).
- The outside air temperature (OAT) is between 4-35°C (39-102°F).
- The propulsion system is active and the engine is running.
- The system voltage is greater than 11 V.
- The purge is not enabled.
- A refueling request button is not pressed.
- The device control exceeds 0.5 seconds.
- The FTP sensor performance diagnostic P0451 is running.
- The EVAP system no purge flow diagnostic P0497 is running.

P1459 and P145A

Runs any time the ECM is awake and the propulsion system is active or not active.

Conditions for Setting the DTC

P1458

- When the propulsion system is not active - If the difference between the EVAP system leak detection pump pressure sensor, absolute, reading and the BARO value is 3 kPa (0.44 PSI) for 14 s.
- When the propulsion system is active, and after a stabilisation time of 10 s - When a recent BARO update has occurred within the last 0.1 km (0.06 mi), if the difference between the EVAP system leak detection pump pressure sensor, absolute, reading and the BARO value from the MAP sensor is 15 kPa (2.17 PSI).
- When a recent BARO update has not occurred within the last 0.1 km (0.06 mi) - If the difference between the EVAP system leak detection pump pressure sensor, absolute, reading and the BARO value from the MAP sensor is 20 kPa (2.9 PSI).

P1459

The ECM detects that the EVAP system leak detection pump pressure sensor signal is less than 0.7 V for greater than 8 s.

P145A

The ECM detects that the EVAP system leak detection pump pressure sensor signal is greater than 4.85 V for greater than 8 s.

Action Taken When the DTC Sets

DTCs P1458, P1459 and P145A are Type B DTCs.

Conditions for Clearing the DTC

DTCs P1458, P1459 and P145A are Type B DTCs.

Diagnostic Aids

- A normal BARO reading of the vehicle's geographic location will help to determine if a BARO sensor is significantly off its reading.
- The diagnostic does not run when purge is enabled because it can influence the EVAP leak detection pump pressure sensor reading if there is any restriction in the fresh air plumbing.
- Test for a plugged 5 micron in-line vent filter between the EVAP system leak detection pump and the fuel fill neck.
- This diagnostic is disabled when P0451 or P0497 is currently running.

Reference Information

Schematic Reference

Engine Controls Schematics

Connector End View Reference

Component Connector End Views

Description and Operation

Evaporative Emission Control System Description

Hybrid Modes of Operation Description

Electrical Information Reference

- Circuit Testing
- Connector Repairs
- Testing for Intermittent Conditions and Poor Connections
- Wiring Repairs

DTC Type Reference

Powertrain Diagnostic Trouble Code (DTC) Type Definitions

Scan Tool Reference

Control Module References for scan tool information

Circuit/System Verification

1. Vehicle in Service Mode, compare the BARO reading against the EVAP leak detection pump sensor reading with a scan tool. Compare this to the Altitude vs. Barometric Pressure Table referenced here Altitude Versus Barometric Pressure .
   A variance of more than 3 kPa (0.44 PSI) indicates a skewed BARO or EVAP leak detection pump sensor.
2. Operate the vehicle within the conditions for running the DTC to verify the DTC does not reset. You may also operate the vehicle within the conditions that you observed from the freeze frame/failure records data.

Circuit/System Testing

1. Vehicle OFF, disconnect the harness connector at the Q63 EVAP system leak detection pump assembly.

   Note: Testing for steps 2-5 is performed on the ECM side of the harness connector.

2. Vehicle OFF, all systems OFF. It may take up to 2 minutes for all vehicle systems to power down. Test for less than 5 Ω between the Q63 EVAP system leak detection pump pressure sensor low reference circuit terminal 8 and ground.
   If greater than the specified range, test the low reference circuit for an open/high resistance. If the circuit tests normal, replace the K20 ECM.
3. Vehicle in Service Mode, test for 4.8-5.2 V between the Q63 EVAP system leak detection pump 5 V reference circuit terminal 6 and ground.
   If less than the specified range, test the 5 V reference circuit for a short to ground or an open/high resistance. If the circuit tests normal, replace the K20 ECM.
   If greater than the specified range, test the 5 V reference circuit for a short to voltage. If the circuit tests normal, replace the K20 ECM.
4. Verify the scan tool EVAP leak detection pump pressure sensor parameter is less than 0.2 V.
   If greater than the specified range, test the Q63 EVAP system leak detection pump signal circuit terminal 7 for a short to voltage. If the circuit tests normal, replace the K20 ECM.
5. Install a 3 A fused jumper wire between the Q63 EVAP system leak detection pump signal circuit terminal 7 and the 5 V reference circuit terminal 6. Verify the scan tool EVAP leak detection pump pressure sensor parameter is greater than 4.7 V.
   If less than the specified range, test the signal circuit for a short to ground or an open/high resistance. If the circuit tests normal, replace the K20 ECM.

   Note: Note: Testing for this step is performed on the EVAP leak detection pump assembly side of the harness connector.

6. Remove the EVAP assembly and test, inspect, and repair the items listed below. If the items test normal, replace the Q63 EVAP system leak detection pump assembly.
   - Poor connection at the X351 harness connector
   - Open or shorted 5 V reference circuit
   - Open or shorted sensor signal circuit
   - Open low reference circuit

Repair Instructions

Perform the Diagnostic Repair Verification after completing the diagnostic procedure.

- Evaporative Emission System Vacuum Leak Detection Pump Replacement
- Control Module References for ECM replacement, setup, and programming

&#169© Copyright Chevrolet. All rights reserved

DTC P145C or P145D

Diagnostic Instructions

- Perform the Diagnostic System Check - Vehicle prior to using this diagnostic procedure.
- Review Strategy Based Diagnosis for an overview of the diagnostic approach.
- Diagnostic Procedure Instructions provides an overview of each diagnostic category.

DTC Descriptors

DTC P145C: Evaporative Emission (EVAP) System Leak Detection Pump Stuck Off

DTC P145D: Evaporative Emission (EVAP) System Leak Detection Pump Stuck On

Circuit/System Description

The evaporative emission (EVAP) system uses a EVAP leak detection pump to test for system leaks. The EVAP leak detection pump assembly consists of the following components:

- EVAP leak detection pump with reference orifice
- EVAP leak detection pump switching valve
- EVAP leak detection pump pressure sensor

The EVAP leak detection vacuum pump stuck off test is performed by comparing an initial stabilised EVAP leak detection pump pressure sensor, absolute, reading to a second stabilised reading for a short period of time.

The EVAP leak detection vacuum pump stuck on test is performed after the switching valve transitions from vent to not venting, pump, position. If after the second EVAP leak detection pump pressure sensor reading, a difference between the two pressure readings indicates the EVAP leak detection vacuum pump is stuck on.

Conditions for Running the DTC

P145C and P145D

- DTCs P043E, P043F, P0101, P0102, P0103, P0106, P0107, P0108, P0111, P0112, P0113, P0114, P0116, P0117, P0118, P0119, P0121, P0122, P0123, P0128, P012B, P012C, P012D, P0222, P0223, P0449, P0451, P0452, P0453, P0461, P0462, P0463, P0498, P0499, P0502, P0503, P06E4, P0722, P0723, P1221, P1458, P1459, P145A, P145C, P145D, P145E, P2066, P2067, P2068, P2400, P2401, P2402, P2418, P2419, P2420, P2421, P2422, P2450, P2537, P2610, U0073, U0074, U0140, U182D is not set.
- The propulsion system is not active
- The EVAP purge valve is closed
- The EVAP vent solenoid valve is closed
- The EVAP Leak Detection Pump switching valve is in the vent position
- The EVAP Leak Detection Pump vacuum pump is ON
- The odometer greater than 16 km (10 mi)
- The barometric pressure (BARO) is between 70-110 kPa (10-16 PSI)
- The fuel level is between 10-90%
- The engine coolant temperature is less than 40°C (104°F)
- The inlet air temperature is between 4-45°C (39-113°F)
- The system voltage is greater than 10 V
- The vehicle speed is less than 1.6 km/h (1 MPH)
- No ignition key up during test
- The refuelling request button is not pressed
- A service bay test is not active
- The device control is not active
- There are three possible time windows for this test to run. Up to that point and through this time period the propulsion system must not be active. These time windows are: 5.0, 7.0 or 9.5 hours

Conditions for Setting the DTC

P145C

The EVAP leak detection pump is commanded ON during the first reference orifice vacuum measurement and the stabilized EVAP leak detection pump pressure sensor vacuum reading is less than 0.1 kPa (0.01 PSI) for greater than 6 min.

Or

The EVAP leak detection pump is commanded ON during the second reference orifice vacuum measurement and the stabilized EVAP leak detection pump pressure sensor vacuum reading is less than 0.1 kPa (0.01 PSI) for greater than 30 s.

P145D

The EVAP leak detection pump is commanded OFF for the first time and the EVAP leak detection pump switching valve has transitioned from vent to not venting, pump position. The difference between an initial EVAP leak detection pump pressure sensor reading and a second EVAP leak detection pump pressure sensor reading is greater

than 1 kPa (0.14 PSI) for greater than 8 s.

Or

The EVAP leak detection pump is commanded OFF for the second time and the EVAP leak detection pump pressure sensor vacuum reading is greater than 1.18 kPa (0.17 PSI) for greater than 14 s.

Action Taken When the DTC Sets

DTCs P145C and P145D are Type B DTCs.

Conditions for Clearing the DTC

DTCs P145C and P145D are Type B DTCs.

Reference Information

Schematic Reference

Engine Controls Schematics

Connector End View Reference

Component Connector End Views

Description and Operation

Evaporative Emission Control System Description

Hybrid Modes of Operation Description

Electrical Information Reference

- Circuit Testing
- Connector Repairs
- Testing for Intermittent Conditions and Poor Connections
- Wiring Repairs

DTC Type Reference

Powertrain Diagnostic Trouble Code (DTC) Type Definitions

Scan Tool Reference

Control Module References for scan tool information

Circuit/System Verification

- Vehicle in Service Mode, verify the scan tool parameter for the EVAP leak detection pump pressure compared against the conditions for setting.
  If found out of range proceed to Circuit/System Testing.
- Verify that DTCs P2400, P2401 or P2402 is not set.
  If any of the DTCs are set refer to Powertrain Diagnostic Trouble Code (DTC) Type Definitions .
  If none of the DTCs are set.
- Inspect for any aftermarket devices added that might have spliced into wire harness circuits that control the EVAP leak detection pump.
- Operate the vehicle within the conditions for running the DTC to verify the DTC does not reset. You may also operate the vehicle within the conditions that you observed from the freeze frame/failure records data.

Circuit/System Testing

1. If DTCs P2400, P2401 or P2402 are present repair these before proceeding, Powertrain Diagnostic Trouble Code (DTC) Type Definitions
2. If none of the above DTCs are present verify the scan tool parameter for the EVAP leak detection pump pressure.
   If found out of range, replace the Q63 evaporative emission system leak detection pump assembly.

Repair Instructions

Perform the Diagnostic Repair Verification after completing the diagnostic procedure.

Evaporative Emission System Vacuum Leak Detection Pump Replacement

&#169© Copyright Chevrolet. All rights reserved

DTC P145E

Diagnostic Instructions

- Perform the Diagnostic System Check - Vehicle prior to using this diagnostic procedure.
- Review Strategy Based Diagnosis for an overview of the diagnostic approach.
- Diagnostic Procedure Instructions provides an overview of each diagnostic category.

DTC Descriptors

DTC P145E: Evaporative Emission (EVAP) System Leak Detection Pump to Vent Solenoid Valve Leak Detected

Circuit/System Description

The evaporative emission (EVAP) system uses a EVAP leak detection pump to test for system leaks. The EVAP leak detection pump assembly consists of the following components:

- EVAP leak detection pump with reference orifice
- EVAP leak detection pump switching valve
- EVAP leak detection pump pressure sensor

This DTC sets when the ECM detects with a leak 0.51 mm (0.020 in) between the EVAP leak detection pump and the EVAP vent solenoid valve.

Conditions for Running the DTC

- DTCs P0101, P0102, P0103, P0106, P0107, P0108, P0111, P0112, P0113, P0114, P0116, P0117, P0118, P0119, P0121, P0122, P0123, P0128, P012B, P012C, P012D, P0222, P0223, P0449, P0452, P0453, P0461, P0462, P0463, P0498, P0499, P0502, P0503, P06E4, P0722, P0723, P1221, P1459, P145A, P2066, P2067, P2068, P2400, P2401, P2402, P2418, P2419, P2420, P2537, P2610, U0073, U0074, U0140, U182D, P043E, P043F, P0451, P1458, P145C, P145D and P2450 are not set
- The EVAP purge valve is closed
- The EVAP vent solenoid valve transitions to closed
- The EVAP leak detection pump switching valve in not venting, pump position
- The EVAP leak detection pump vacuum pump is ON

- The odometer greater than 16 km (10 mi)
- The barometric pressure (BARO) is between 70-110 kPa (10-16 PSI)
- The fuel level is between 10-90%
- The engine coolant temperature is less than 40°C (104°F)
- The inlet air temperature is between 4-45°C (39-113°F)
- The system voltage is greater than 10 V
- The vehicle speed is less than 1.6 km/h (1 MPH)
- No ignition key up during this test
- The refuelling request button is not pressed
- A service bay test is not active
- The device control is not active
- There are three possible time windows for this test to run. Up to that point and through this time period the propulsion system must not be active. These time windows are: 5.0, 7.0 or 9.5 hours.

Conditions for Setting the DTC

The ECM detects, the vacuum reading is less than the reference vacuum for greater than 30 s.

Action Taken When the DTC Sets

DTC P145E is a Type B DTC.

Conditions for Clearing the DTC

DTC P145E is a Type B DTC.

Diagnostic Aids

- The EVAP system can be filled with smoke at the fresh air side of the vacuum pump using the adapters in the GE-41413-300 .
- Smoke seen coming out of the fresh air side of the EVAP leak detection pump assembly is not consider a failed part. This includes the electrical connection port as diagnostics will not detect a leak on the fresh air side of the system.
- To help locate intermittent leaks, use the J 41413-200 to introduce smoke into the EVAP system. Move all the EVAP components while observing for smoke with a high intensity white light.
- To improve the visibility of the smoke exiting the EVAP system, observe the suspected leak area from different angles with the GE-41413-SPT .
- If a small leak is difficult to find, it may be necessary to remove the EVAP components and test them one at a time using the adapters in the GE-41413-300 .
- Operate the vehicle within the conditions for running the DTC to verify the DTC does not reset. You may also operate the vehicle within the conditions that you observed from the freeze frame/failure records data.

Reference Information

Schematic Reference

Engine Controls Schematics

Connector End View Reference

Component Connector End Views

Description and Operation

Evaporative Emission Control System Description

Hybrid Modes of Operation Description

Electrical Information Reference

- Circuit Testing
- Connector Repairs
- Testing for Intermittent Conditions and Poor Connections
- Wiring Repairs

DTC Type Reference

Powertrain Diagnostic Trouble Code (DTC) Type Definitions

Scan Tool Reference

Control Module References for scan tool information

Special Tools

- GE-41413-300 EVAP Cap And Plug Kit
- GE-41413-SPT High Intensity White Light
- J 41413-200 Evaporative Emissions System Tester (EEST)

For equivalent regional tools, refer to Special Tools : Diagnostic Tools .

Circuit/System Verification

1. Verify the following conditions do not exist in the EVAP system:
   - Disconnected, incorrectly routed, kinked, or damaged EVAP pipes, O rings and hoses.
   - A damaged EVAP vent solenoid valve.

   If you find any of the above conditions, repair as necessary.

   Note: Refer to the J 41413-200 operation manual for detailed instructions in Evaporative Emission Control System Diagnosis

2. Disconnect the fresh air tube at the quick connector on the Q63 evaporative emission system leak detection pump and using adapters in the GE-41413-300 , specifically GE 41413-323, connect the J 41413-200

   Note: Ensure that the vehicle underbody temperature is similar to the ambient temperature and allow the surrounding air to stabilise before starting the diagnostic procedure. The system flow will be less with higher temperatures.

3. Use the flow meter on the J 41413-200 calibrated to 0.51 mm (0.020 in) determine if there is a leak in the evaporative emission system. Compare the flow meter's stable floating indicator position to the red flag. The floating indicator should be below the red flag.
   If a leak is detected, use the J 41413-200 to apply smoke to the EVAP system until the leak is located following the Evaporative Emission Control System Diagnosis
4. Operate the vehicle within the conditions for running the DTC to verify the DTC does not reset. You may also operate the vehicle within the conditions that you observed from the freeze frame/failure records data

Circuit/System Testing

Note: Refer to the J 41413-200 operation manual for detailed instructions.

1. Disconnect the Q13 evaporative emission vent solenoid valve from the hose going to the EVAP leak detection pump and install *GE 41413-324* female EEST to fuel tank adapter and *GE 41413-310* green cap to plug the hose.
2. Using J 41413-200 connected to the fresh air side of the Q63 evaporative emission system leak detection pump test the hose between the Q13 evaporative emission vent solenoid valve and the Q63 evaporative emission system leak detection pump for a leak.
   If a leak is detected repair the affected component.
3. If no leak is found test the Q13 evaporative emission vent solenoid valve for a leak.
4. Test for no air flow through the Q13 evaporative emission vent solenoid valve by applying vacuum to the pump side of the valve. It should hold 1-2 in. Hg (3-7 kPa) for 30 s.
   If not within the specified range, replace the Q13 evaporative emission vent solenoid valve.

Repair Instructions

Perform the Diagnostic Repair Verification after completing the diagnostic procedure

- Evaporative Emission System Vacuum Leak Detection Pump Replacement

- Evaporative Emission Canister Vent Solenoid Valve Replacement

&#169© Copyright Chevrolet. All rights reserved

DTC P1461

Diagnostic Instructions

- Perform the Diagnostic System Check - Vehicle prior to using this diagnostic procedure.
- Review Strategy Based Diagnosis for an overview of the diagnostic approach.
- Diagnostic Procedure Instructions provides an overview of each diagnostic category.

DTC Descriptor

DTC P1461: Evaporative Emission (EVAP) System Pressure Incorrect During Fuel Fill Door Open Request

Circuit/System Description

The Hybrid Powertrain Control Module 2 (HPCM2) monitors the fuel tank pressure (FTP) during a fuel fill door open request. If the FTP pressure does not fall within a predetermined range within 30 seconds this DTC sets.

Conditions for Running the DTC

- The HPCM2 is active.
- The fuel fill door open switch is pressed.

Conditions for Setting the DTC

The Hybrid Powertrain Control Module 2 detects the FTP sensor reading does not fall within a predetermined value for greater than 30 s.

Action Taken When the DTC Sets

The DTC P1461 is a type A DTC.

Conditions for Clearing the DTC

The DTC P1461 is a type A DTC.

Diagnostic Aids

- A restriction in the EVAP canister or vent lines that might hold FTP pressure could affect this.
- This DTC will not prevent the fuel fill door from opening.
- A vent valve stuck closed could affect this.
- Ensure that the reference port on the FTP sensor is unobstructed.
- Operate the vehicle within the conditions for running the DTC to verify the DTC does not reset. You may also operate the vehicle within the conditions that you observed from the freeze frame/failure records data.

Reference Information

Schematic Reference

- Engine Controls Schematics
- Release Systems Schematics : Tailgate Schematics → Release System Schematics

Connector End View Reference

Component Connector End Views

Description and Operation

- Evaporative Emission Control System Description
- Hybrid Modes of Operation Description
- Fuel Fill Door Description and Operation (Fuel Door)

Electrical Information Reference

- Circuit Testing
- Connector Repairs
- Testing for Intermittent Conditions and Poor Connections
- Wiring Repairs

DTC Type Reference

Powertrain Diagnostic Trouble Code (DTC) Type Definitions

Scan Tool Reference

Control Module References for scan tool information

Special Tools

For equivalent regional tools, refer to Special Tools : Diagnostic Tools .

Circuit Verification

1. Vehicle in Service Mode, observe and note the FTP pressure with a scan tool.
2. Request a refuelling event. The FTP reading should be at 0 inches of H20.
   If not, test and repair any vent restriction.
3. Using a scan tool, observe the following HPCM2 Fuel System parameters:
   - Refuel System Vent Requested
   - Refuel System Vented

   These parameters should show yes for vented.

Repair Instructions

- Perform the Diagnostic Repair Verification after completing the diagnostic procedure.
- Fuel Tank Pressure Sensor Replacement
- Control Module References for ECM and Hybrid Control Module 2 replacement, setup, and programming.

&#169© Copyright Chevrolet. All rights reserved

DTC P1516, P2101, P2119, or P2176

Diagnostic Instructions

- Perform the Diagnostic System Check - Vehicle prior to using this diagnostic procedure.
- Review Strategy Based Diagnosis for an overview of the diagnostic approach.
- Diagnostic Procedure Instructions provides an overview of each diagnostic category.

DTC Descriptors

DTC P1516: Throttle Actuator Control (TAC) Module Throttle Actuator Position Performance

DTC P2101: Throttle Actuator Position Performance

DTC P2119: Throttle Closed Position Performance

DTC P2176: Minimum Throttle Position Not Learned

Diagnostic Fault Information

Circuit	Short to Ground	Open/High Resistance	Short to Voltage	Signal Performance
Motor Control 1	P1516, P2101, P2176	P1516, P2101, P2176	P1516, P2101, P2176	P1516, P2101, P2176
Motor Control 2	P1516, P2101, P2176	P1516, P2101, P2176	P1516, P2101, P2176	P1516, P2101, P2176

Circuit/System Description

The engine control module (ECM) controls the throttle valve by applying a varying voltage to the control circuits of the throttle actuator control (TAC) motor. The ECM monitors the duty cycle that is required to actuate the throttle valve. The ECM monitors the throttle position (TP) sensors 1 and 2 to determine the actual throttle valve position.

Conditions for Running the DTC

P1516

- The ignition is ON or the engine is operating.
- The run/crank voltage is greater than 6.4 V.
- The DTC runs continuously when the above conditions are met.

P2101

- DTC P1682 is not set.
- The run/crank voltage is greater than 6.4 V.
- The engine is running or the following conditions are met:
  - The engine is not running.
  - The ignition voltage is greater than 11 V.
  - The TAC system is not in the Battery Saver mode.
  - The ECM is commanding the throttle.
  - The ECM has learned the minimum throttle position.
- The DTC runs continuously when the above conditions are met.

P2119

- DTC P06A3 is not set.
- The powertrain relay voltage is greater than 5.5 V.
- The TP sensor 1 voltage is greater than 1.76 V.
- The TP sensor 2 voltage is greater than 1.7 V.
- The ECM is not commanding the throttle blade.
- The DTC runs when the ignition is turned to the OFF position, when the above conditions are met.

P2176

- The ignition is ON.
- The run/crank voltage is greater than 6.4 V.
- The ECM enable the minimum throttle learn procedure.
- DTC P2176 run continuously when the above conditions are met.

Conditions for Setting the DTC

P1516

The actual throttle position does not match the predicted throttle position for greater than 1 s.

P2101

The actual throttle position does not match the predicted throttle position for greater than 1 s.

P2119

The ECM detects that the throttle blade did not return to the default position when the TAC motor is de-energised for greater than 1 s.

P2176

The ECM detects that both throttle position (TP) sensors were greater than a predetermined voltage during the minimum throttle learn procedure for greater than 2 s.

Action Taken When the DTC Sets

- DTCs P1516, P2101, and P2176 are Type A DTCs.
- DTC P2119 is a Type C DTC.
- A message centre displays Propulsion Power is Reduced.
- Under certain conditions, the ECM commands the engine OFF.

Conditions for Clearing the DTC

- DTCs P1516, P2101, and P2176 are Type A DTCs.
- DTC P2119 is a Type C DTC.

Diagnostic Aids

- Inspect for a condition in which the throttle valve may have been held open. For example, ice may have formed in the throttle bore causing the throttle valve not to close.
- A high resistance condition on the throttle position and throttle actuator control circuits could cause a DTC to set.
- A low battery condition may cause a DTC to set.

Reference Information

Schematic Reference

Engine Controls Schematics

Connector End View Reference

Component Connector End Views

Description and Operation

Hybrid Modes of Operation Description

Throttle Actuator Control (TAC) System Description

Electrical Information Reference

- Circuit Testing
- Connector Repairs
- Testing for Intermittent Conditions and Poor Connections
- Wiring Repairs

DTC Type Reference

Powertrain Diagnostic Trouble Code (DTC) Type Definitions

Scan Tool Reference

Control Module References for scan tool information

Circuit/System Verification

Note: A low 12 V battery voltage or charging system condition may cause a DTC to set.

1. Vehicle in Service Mode.
2. Verify DTC P0121, P0122, P0123, P0222, P0223, P0562, P0563, or P2135 is not set.
   If any of the DTCs are set
   Refer to Diagnostic Trouble Code (DTC) List - Vehicle for further diagnosis.
   If none of the DTCs are set
3. Verify the scan tool Throttle Body Idle Air Flow Compensation parameter is less than 90 %.
   90 % or greater
   Refer to Throttle Body Inspection and Cleaning
   If less than 90 %
4. Clear the DTCs with a scan tool.
5. Vehicle OFF and all vehicle systems OFF. It may take up to 2 minutes for all vehicle systems to power down.

6. Vehicle in Service Mode.
7. Verify the scan tool TAC Motor parameter displays Enabled.
   If Disabled
   Refer to Circuit/System Testing
   If Enabled
8. Verify DTC P1516, P2101, P2119, or P2176 is not set.
   If any of the DTCs are set
   Refer to Circuit/System Testing
   If none of the DTCs are set

   Note: If there is a condition with the throttle body, the TAC Motor Command parameter will go to 99 % for a predetermined amount of time and then a DTC sets. Once a DTC is set, the TAC Motor Command parameter will go to 0 % and the TAC Motor parameter will display Disabled.

9. Verify the scan tool TAC Motor parameter displays Enabled while performing the Throttle Sweep Test with a scan tool.
   If Disabled

   Note: Before replacing the throttle body assembly, make sure the TAC motor control circuits are not shorted to B+.

   Test or replace the Q38 throttle body assembly.
   If Enabled
10. Operate the vehicle within the Conditions for Running the DTC. You may also operate the vehicle within the conditions that you observed from the Freeze Frame/Failure Records data.
11. Verify a DTC does not set.
    If any DTC sets
    Refer to Diagnostic Trouble Code (DTC) List - Vehicle for further diagnosis.
    If no DTCs set
12. All OK

Circuit/System Testing

1. Vehicle OFF.

   Warning: Turn OFF the ignition before inserting fingers into the throttle bore. Unexpected movement of the throttle blade could cause personal injury.

2. Verify the conditions listed below do not exist with the Q38 throttle body assembly:
   - A throttle blade that is not in the rest position
   - A throttle blade that is binding open or closed
   - A throttle blade that is free to move open or closed without spring pressure

   If a condition is found

Test or replace the Q38 throttle body assembly.

If a condition is not found

3. Vehicle OFF.

Note: Disconnecting the throttle body harness connector may cause additional DTCs to set.

4. Disconnect the harness connector at the Q38 throttle body assembly, vehicle in Service Mode.
5. Verify that a test lamp does not illuminate between each motor control circuit listed below and ground.
   - TAC Motor Control Closed circuit terminal A
   - TAC Motor Control Open circuit terminal B

   If the test lamp illuminates

   5.1. Vehicle OFF, disconnect the harness connector at the K20 engine control module, vehicle in Service Mode.
   5.2. Test for less than 1 V between the control circuit and ground.
   If 1 V or greater, repair the short to voltage on the circuit.

   If the test lamp is always OFF
6. Verify that a test lamp does not illuminate between each motor control circuit listed below and B+.
   - TAC Motor Control Closed circuit terminal A
   - TAC Motor Control Open circuit terminal B

   If the test lamp illuminates

   6.1. Vehicle OFF, disconnect the harness connector at the K20 engine control module.
   6.2. Test for infinite resistance between the control circuit and ground.
   If less than infinite resistance, repair the short to ground on the circuit.
   If infinite resistance, replace the K20 engine control module.
   If the test lamp is always OFF
7. Vehicle OFF, set the DMM to the 40 V scale, select the Min/Max Recording Mode, and set the Peak Min/Max response time to 1 ms.

   Note:
   - The DMM Min/Max Recording Mode and the response time of 1 ms must be reset after testing each circuit.
   - The vehicle must be OFF and the ECM completely powered down before testing each circuit.

8. Verify the Max voltage is within 1 V of B+ while using DMM Min/Max Recording Mode function on each control circuit listed below with the vehicle in Service Mode.
   - TAC Motor Control Closed circuit terminal A
   - TAC Motor Control Open circuit terminal B

   If not within 1 V of B+

   8.1. Vehicle OFF, disconnect the harness connector at the K20 engine control module.
   8.2. Test for less than 2 Ω in the control circuit end to end.
   If 2 Ω or greater, repair the open/high resistance in the circuit.

If less than 2 Ω, replace the K20 engine control module.

If within 1 V of B+

9. Test or replace the Q38 throttle body assembly.

Repair Instructions

- Throttle Body Assembly Replacement
- Control Module References for ECM replacement, programming and setup

Repair Verification

1. Install any components that have been removed or replaced during diagnosis.
2. Perform any adjustments, programming or setup procedures that are required when a component is removed or replaced.
3. Clear the DTCs with a scan tool.
4. Vehicle OFF and all vehicle systems OFF. It may take up to 2 minutes for all vehicle systems to power down.
5. Vehicle in Service Mode.
6. Verify the scan tool TAC Motor parameter displays Enabled while performing the Throttle Sweep Test with a scan tool.

   If Disabled

   Test or replace the Q38 throttle body assembly.

   If Enabled
7. If the repair was related to a DTC, duplicate the Conditions for Running the DTC and use the Freeze Frame/Failure Records, if applicable, in order to verify the DTC does not reset.

   If any DTC sets

   Refer to Diagnostic Trouble Code (DTC) List - Vehicle for further diagnosis.

   If no DTC sets
8. All OK

&#169© Copyright Chevrolet. All rights reserved

DTC P15F9

Diagnostic Instructions

- Perform the Diagnostic System Check - Vehicle prior to using this diagnostic procedure.
- Review Strategy Based Diagnosis for a overview of the diagnostic approach.
- Diagnostic Procedure Instructions provides an overview of each diagnostic category.

DTC Descriptor

DTC P15F9: Hybrid System Engine Speed Control Intervention Request Type Signal Message Counter Incorrect

Circuit/System Description

The hybrid powertrain control module is constantly sending serial data messages to the ECM regarding the operating state of the powertrain propulsion system. These messages are sent in a continuously repeating series of rolling counts with associated password protect samples and each count/sample is assigned a value. The ECM uses the values, during a propulsion system mode shift, to determine when and at what RPM to idle the internal combustion engine. When the ECM determines that too many of the counts/samples contain an error value, the ECM sets DTC P15F9.

Conditions for Running the DTC

- DTC U1817 is not set.
- The engine run time is greater than 0.5 s.
- No other CAN errors are present.
- DTC P15F9 runs continuously when the above conditions are met.

Conditions for Setting the DTC

The ECM detects that 10 of 16 counts/samples contain an error value.

Action Taken When the DTC Sets

DTC P15F9 is a Type B DTC

Conditions for Clearing the DTC

DTC P15F9 is a Type B DTC.

Diagnostic Aids

An intermittent fault in the CAN circuits will cause the ECM to set DTC P15F9.

Reference Information

Description and Operation

Hybrid Modes of Operation Description

DTC Type Reference

Powertrain Diagnostic Trouble Code (DTC) Type Definitions

Scan Tool Reference

Control Module References for scan tool information

Circuit/System Verification

> **Note:** Correct any engine control DTCs before diagnosing hybrid powertrain control module DTCs.

1. DTC P15F9 is an informational DTC. If there are no other engine control DTCs set, refer to Diagnostic Trouble Code (DTC) List - Vehicle for diagnosis of hybrid powertrain control module DTCs.
2. Operate the vehicle within the Conditions for Running the DTC to verify the DTC does not reset. You may also operate the vehicle within the conditions that you observed from the Freeze Frame/Failure Records data.

Repair Instructions

Perform the Diagnostic Repair Verification after completing the diagnostic procedure.

&#169© Copyright Chevrolet. All rights reserved

DTC P15FB

Diagnostic Instructions

- Perform the Diagnostic System Check - Vehicle prior to using this diagnostic procedure.
- Review Strategy Based Diagnosis for a overview of the diagnostic approach.
- Diagnostic Procedure Instructions provides an overview of each diagnostic category.

DTC Descriptor

DTC P15FB: Brake Pedal Position Sensor Signal Message Counter Incorrect

Circuit/System Description

The electronic brake control module (EBCM) monitors the brake pedal position sensor in order to provide emission related brake pedal position information to the engine control module (ECM). The EBCM sends the information, via the serial data circuit, to the ECM in a continuously repeating series of 16 rolling counts, with each count assigned a value. When the ECM determines that too many of the counts have an incorrect value, the ECM sets DTC P15FB.

Conditions for Running the DTC

- The vehicle is ON.
- DTC P15FB runs continuously when the above condition is met.

Conditions for Setting the DTC

The ECM detects that too many of the rolling counts have an incorrect value.

Action Taken When the DTC Sets

- DTC P15FB is a Type B DTC.
- Brake pedal position is defaulted to 0 for as long as the fault is active.

Conditions for Clearing the DTC

DTC P15FB is a Type B DTC.

Reference Information

Description and Operation

Hybrid Modes of Operation Description

DTC Type Reference

Powertrain Diagnostic Trouble Code (DTC) Type Definitions

Scan Tool Reference

Control Module References for scan tool information.

Circuit/System Verification

1. DTC P15FB is an informational DTC. If there are no other engine control DTCs set, refer to Diagnostic Trouble Code (DTC) List - Vehicle for diagnosis of EBCM DTCs.
2. Operate the vehicle within the Conditions for Running the DTC to verify the DTC does not reset. You may also operate the vehicle within the conditions that you observed from the Freeze Frame/Failure Records data.

Repair Instructions

Perform the Diagnostic Repair Verification after completing the diagnostic procedure.

&#169© Copyright Chevrolet. All rights reserved

DTC P162D

Diagnostic Instructions

- Perform the Diagnostic System Check - Vehicle prior to using this diagnostic procedure.
- Review Strategy Based Diagnosis for an overview of the diagnostic approach.
- Diagnostic Procedure Instructions provides an overview of each diagnostic category.

DTC Descriptor

DTC P162D: Evaporative Emission (EVAP) System Alarm Clock Signal Not Received

Circuit/System Description

The wake up signal circuit is energised by the hybrid powertrain control module 2 to immediately activate other control modules connected to this circuit when the body control module (BCM) signals the powertrain control module 2 that serial data is required.

Depending on the option content, control modules that may receive the wake up signal are as follows:

- 14 V Power Module
- Battery Charger
- Battery Energy Control Module (BECM)
- Electronic Brake Control Module (EBCM)
- A/C Compressor
- Transmission Control Module (TCM)
- Engine Control Module (ECM)
- Power Inverter Module

Conditions for Running the DTC

- DTC's P0502, P0503, P0722, P0723, P2610, U182D, U0073, U0074 or P2537 is not set.
- The vehicle power mode master requires serial data communication to occur.

- The hybrid powertrain control module 2 attempts to wake up the control modules connected to its control module output wake up circuit.
- A service bay test is not active

Conditions for Setting the DTC

At Propulsion System Active, if the ECM did not receive feedback from the hybrid powertrain control module 2 that the alarm clock was set, and any one of the three wake-up timer events did not occur, then the DTC fails.

Action Taken When the DTC Sets

- DTC P162D is a type B DTC.
- The control modules are never signaled; therefore the specific subsystems will not function.
- The vehicle will not start while the circuit is shorted to ground.
- The MIL will illuminate after the 2nd ignition cycle, along with several DIC messages.

Conditions for Clearing the DTC

DTC P162D is a type B DTC.

Diagnostic Aids

Short to ground will also set multiple no communication codes for high speed GMLAN control modules.

Reference Information

Schematic Reference

- Data Communication Schematics
- Control Module References

Connector End View Reference

Component Connector End Views

Description and Operation

Data Link Communications Description and Operation

Hybrid Modes of Operation Description

Electrical Information Reference

- Circuit Testing
- Connector Repairs
- Testing for Intermittent Conditions and Poor Connections
- Wiring Repairs

DTC Type Reference

Powertrain Diagnostic Trouble Code (DTC) Type Definitions

Scan Tool Reference

Control Module References for scan tool information

Special Tools

EL-48900

For equivalent regional tools, refer to Special Tools .

Circuit/System Testing

Danger: Always perform the High Voltage Disabling procedure prior to servicing any High Voltage component or connection. Personal Protection Equipment (PPE) and proper procedures must be followed.

The High Voltage Disabling procedure will perform the following tasks:

- Identify how to disable high voltage.
- Identify how to test for the presence of high voltage.
- Identify condition under which high voltage is always present and personal protection equipment (PPE) and proper procedures must be followed.

Before working on any high voltage system, be sure to wear the following Personal Protection Equipment:

- Safety glasses with appropriate side shields when within 15 metres (50 feet) of the vehicle, either indoors or outdoors.
- Certified and up-to-date Class "0" Insulation gloves rated at 1000V with leather protectors.
  - Visually and functionally inspect the gloves before use.
  - Wear the Insulation gloves with leather protectors at all times when working with the high voltage battery assembly, whether the system is energised or not.

Failure to follow the procedures exactly as written may result in serious injury or death.

Note: Use the schematic to identify the following:

- The control modules that share the K114B hybrid powertrain control module 2 terminal 69 X2 accessory wake-up serial data 2 circuit
- The control module B+, ignition, ground, communication enable and serial data circuit terminals

1. Vehicle OFF, disconnect the X2 harness connectors at the K114B hybrid powertrain control module 2.
2. Vehicle OFF, all systems OFF, all keys at least 3 metres away from vehicle, all access doors closed. It may take up to 2 minutes for all vehicle systems to power down. Test for greater than 100 Ω, but less than infinite resistance, between the accessory wake-up serial data 2 circuit terminal 69 X2 and ground.
   If less than the specified range, refer below to Testing the Accessory Wake-Up Serial Data 2 Circuits for a Short to Ground.
   If infinite resistance, test the accessory wake-up serial data 2 circuit for an open/high resistance.
3. Verify that a test lamp illuminates between each B+ circuit terminal and ground.
   If the test lamp does not illuminate, test the B+ circuit for a short to ground or an open/high resistance. If the circuit tests normal and the B+ circuit fuse is open, replace the K114B hybrid powertrain control module 2.
4. Verify that a test lamp illuminates between each ignition circuit terminal and ground.
   If the test lamp does not illuminate, test the ignition circuit for a short to ground or an open/high resistance. If the circuit tests normal and the ignition circuit fuse is open, replace the K114B hybrid powertrain control module 2.
5. If the circuits test normal, replace the K114B hybrid powertrain control module 2.

Testing the Accessory Wake-Up Serial Data 2 Circuits for a Short to Ground

1. Perform the High Voltage Disabling procedure before proceeding with this diagnostic. Refer to High Voltage Disabling .
2. Reconnect the 12 V battery.
3. Vehicle OFF, disconnect the harness connector at an easily accessible control module that shares the K114B hybrid powertrain control module 2 terminal 69 X2 accessory wake-up serial data 2 circuit.
4. Test for less than 100 Ω between the K114B hybrid powertrain control module 2 accessory wake-up serial data 2 circuit terminal 69 X2 and ground.
   If greater than the specified range, replace the control module that was just disconnected.
5. Repeat step 1 until all control modules on the K114B hybrid powertrain control module 2 accessory wake-up serial data 2 circuit terminal 69 X2 have been disconnected.
6. Repair the short to ground on the accessory wake-up serial data 2 circuit.

Repair Instructions

Perform the Diagnostic Repair Verification after completing the diagnostic procedure.

Control Module References for control module replacement, programming and setup.

&#169© Copyright Chevrolet. All rights reserved

DTC P1B12

Diagnostic Instructions

- Perform the Diagnostic System Check - Vehicle prior to using this diagnostic procedure.
- Review Strategy Based Diagnosis for a overview of the diagnostic approach.
- Diagnostic Procedure Instructions provides an overview of each diagnostic category.

DTC Descriptor

DTC P1B12: Driver Intended Brake Torque Fault

Circuit/System Description

The electronic brake control module (EBCM) monitors the brake pedal position sensor in order to provide emission related brake pedal position information to the engine control module (ECM). The EBCM sends the information, via the serial data circuit, to the ECM in a continuously repeating series of 16 rolling counts, with each count assigned a value. When the ECM determines that too many of the counts have an incorrect value, the ECM sets DTC P1B12.

Conditions for Running the DTC

- The propulsion system is active.
- DTC P1B12 runs continuously when the above condition is met.

Conditions for Setting the DTC

The ECM detects that 10 of the 16 rolling counts have an incorrect value.

Action Taken When the DTC Sets

DTC P1B12 is a Type C DTC.

Conditions for Clearing the DTC

DTC P1B12 is a Type C DTC.

Reference Information

Description and Operation

Hybrid Modes of Operation Description

DTC Type Reference

Powertrain Diagnostic Trouble Code (DTC) Type Definitions

Scan Tool Reference

Control Module References for scan tool information.

Circuit/System Verification

Note: Correct any engine control DTCs before diagnosing EBCM DTCs.

1. DTC P1B12 is an informational DTC. If there are no other engine control DTCs set, refer to Diagnostic Trouble Code (DTC) List - Vehicle for diagnosis of EBCM DTCs.
2. Operate the vehicle within the Conditions for Running the DTC to verify the DTC does not reset. You may also operate the vehicle within the conditions that you observed from the Freeze Frame/Failure Records data.

Repair Instructions

Perform the Diagnostic Repair Verification after completing the diagnostic procedure.

&#169© Copyright Chevrolet. All rights reserved

DTC P1E00

Diagnostic Instructions

- Perform the Diagnostic System Check - Vehicle Prior to using this diagnostic procedure.
- Review Strategy Based Diagnosis for an overview of the diagnostic approach.
- Diagnostic Procedure Instructions provides an overview of each diagnostic category.

DTC Descriptor

DTC P1E00: Hybrid Powertrain Control Module 2 Requested MIL Illumination

Circuit/System Description

This diagnostic trouble code (DTC) indicates that an emission related DTC has set in the hybrid powertrain control module 2. The hybrid powertrain control module 2 sends a message, via the serial data circuit, to the engine control module (ECM) requesting illumination of the malfunction indicator lamp (MIL). When the ECM receives the message, DTC P1E00 will set in the ECM.

Conditions for Running the DTC

- The vehicle is ON for greater than 3 s.
- DTC P1E00 runs continuously when the above condition is met.

Conditions for Setting the DTC

The hybrid powertrain control module 2 has set an emission related DTC.

Action Taken When the DTC Sets

DTC P1E00 is a Type A DTC.

Conditions for Clearing the DTC

DTC P1E00 is a Type A DTC.

Reference Information

Description and Operation

Hybrid Modes of Operation Description

DTC Type Reference

Powertrain Diagnostic Trouble Code (DTC) Type Definitions

Scan Tool Reference

Control Module References for scan tool information

Circuit/System Verification

Note: Correct any engine control DTCs before diagnosing hybrid powertrain control module 2 DTCs.

1. DTC P1E00 is an informational DTC. If there are no other engine control DTCs set, refer to Diagnostic Trouble Code (DTC) List - Vehicle for diagnosis of hybrid powertrain control module 2 DTCs.
2. Operate the vehicle within the Conditions for Running the DTC to verify the DTC does not reset. You may also operate the vehicle within the conditions that you observed from the Freeze Frame/Failure Records data.

Repair Instructions

Perform the Diagnostic Repair Verification after completing the diagnostic procedure.

&#169© Copyright Chevrolet. All rights reserved

DTC P2122, P2123, P2127, P2128, or P2138

Diagnostic Instructions

- Perform the Diagnostic System Check - Vehicle prior to using this diagnostic procedure.
- Review Strategy Based Diagnosis for an overview of the diagnostic approach.
- Diagnostic Procedure Instructions provides an overview of each diagnostic category.

DTC Descriptors

DTC P2122: Accelerator Pedal Position (APP) Sensor 1 Circuit Low Voltage

DTC P2123: Accelerator Pedal Position (APP) Sensor 1 Circuit High Voltage

DTC P2127: Accelerator Pedal Position (APP) Sensor 2 Circuit Low Voltage

DTC P2128: Accelerator Pedal Position (APP) Sensor 2 Circuit High Voltage

DTC P2138: Accelerator Pedal Position (APP) Sensors 1-2 Not Plausible

Diagnostic Fault Information

Circuit	Short to Ground	Open/High Resistance	Short to Voltage	Signal Performance
Accelerator Pedal Position (APP) Sensor 1 5 V Reference	P06A3	P2122, P2138	P06A3, P2135	P2138
Accelerator Pedal Position (APP) Sensor 2 5 V Reference	P0106, P0107, P0108, P0697	P2127, P2138	P0106, P0107, P0108, P0697	P2138
Accelerator Pedal Position (APP) Sensor 1 Signal	P2122	P2122, P2138	P2123	P2138
Accelerator Pedal Position (APP) Sensor 2 Signal	P2127	P2127, P2138	P2128, P2138	P2138
Accelerator Pedal Position (APP) Sensor 1 Low Reference	-	P2123, P2138	-	P2138
Accelerator Pedal Position (APP) Sensor 2 Low Reference	-	P2128, P2138	-	P2138

Typical Scan Tool Data

APP Sensor 1

Circuit	Short to Ground	Open	Short to Voltage
Operating Conditions: The engine is operating. ***Parameter Normal Range:*** APP Sensor 1 0.88-1.08 V			
APP Sensor 1 5 V Reference	0.00 V	0.00 V	2-3 V
APP Sensor 1 Signal	0.00 V	0.00 V	4-5 V
APP Sensor 1 Low Reference	-	4-5 V	-

APP Sensor 2

Circuit	Short to Ground	Open	Short to Voltage
Operating Conditions: The engine is operating. ***Parameter Normal Range:*** APP Sensor 2 0.39-0.59 V			
APP Sensor 2 5 V Reference	0.00 V	0.00 V	1-3 V
APP Sensor 2 Signal	0.00 V	0.00 V	2-5 V
APP Sensor 2 Low Reference	-	4-5 V	-

Circuit/System Description

The accelerator pedal assembly contains 2 accelerator pedal position (APP) sensors. The APP sensors are mounted to the accelerator pedal assembly and are not serviceable. The APP sensors provide a signal voltage that changes relative to pedal position. The engine control module (ECM) supplies each APP sensor with a 5 V reference circuit, a low reference circuit, and a signal circuit. Both the APP sensors 1 and 2 signal percentages increase as the pedal is depressed, from approximately 0% at rest to above 95% when fully depressed.

The ECM provides the accelerator pedal position or driver torque request to the hybrid powertrain control module. The hybrid powertrain control module determines how the torque output will be distributed between the two electric motors and the engine.

Conditions for Running the DTC

P2122, P2123, P2127, P2128

- DTC P0697 is not set - P2127 or P2128.
- DTC P06A3 is not set - P2122 or P2123.
- The ignition is ON or the engine is running
- The run/crank voltage is greater than 6.4 V.

- The DTCs run continuously when the above conditions are met.

P2138

- DTCs P06A3, P0697, P2122, P2123, P2127, or P2128 are not set.
- The ignition is ON or the engine is running
- The run/crank voltage is greater than 6.4 V.
- The DTC runs continuously when the above conditions are met.

Conditions for Setting the DTC

P2122

The ECM detects that the APP sensor 1 voltage is less than 0.46 V for greater than 1 s.

P2123

The ECM detects that the APP sensor 1 voltage is greater than 4.7 V for greater than 1 s.

P2127

The ECM detects that the APP sensor 2 voltage is less than 0.32 V for greater than 1 s.

P2128

The ECM detects that APP sensor 2 voltage is greater than 2.6 V for greater than 0.5 s.

P2138

The voltage difference between APP sensor 1 and APP sensor 2 exceeds a predetermined value for greater than 1 s.

Action Taken When the DTC Sets

- DTCs P2122, P2123, P2127, and P2128, and P2138 are Type A DTCs.
- A message centre displays Propulsion Power is Reduced.

Conditions for Clearing the DTC

DTCs P2122, P2123, P2127, and P2128, and P2138 are Type A DTCs.

Diagnostic Aids

- A high resistance condition on the accelerator pedal sensor circuits could cause a DTC to set.
- Ensure that the in-line harness connector seals are installed correctly. Improper installation could result in water intrusion into the connector and cause a DTC to set.

Reference Information

Schematic Reference

Engine Controls Schematics

Connector End View Reference

Component Connector End Views

Description and Operation

Hybrid Modes of Operation Description

Throttle Actuator Control (TAC) System Description

Electrical Information Reference

- Circuit Testing
- Connector Repairs
- Testing for Intermittent Conditions and Poor Connections
- Wiring Repairs

DTC Type Reference

Powertrain Diagnostic Trouble Code (DTC) Type Definitions

Scan Tool Reference

Control Module References for scan tool information

Circuit/System Verification

1. Vehicle in Service Mode.
2. Verify DTC P0697 or P06A3 is not set.
   If any of the DTCs are set
   Refer to for DTC P0641, P0651, P0697, or P06A3 : ECM further diagnosis.
   If none of the DTCs are set
3. Verify the APP Sensor 1 Circuit Status and APP Sensor 2 Circuit Status displays OK.
   If Malfunction is displayed
   Refer to Circuit/System Testing
   If OK is displayed
4. Verify the scan tool APP Sensor 1 and 2 Agree/Disagree parameter displays Agree while performing the tests listed below:
   - Rapidly depress the accelerator pedal from the rest position to the wide open throttle position (WOT) and release pedal. Repeat the procedure several times.
   - Slowly depress the accelerator pedal to WOT and then slowly return the pedal to closed throttle. Repeat the procedure several times.

   If Disagree
   Refer to Circuit/System Testing
   If Agree
5. Verify that DTC P2122, P2123, P2127, P2128, or P2138 is not set.
   If any of the DTCs are set
   Refer to Circuit/System Testing
   If none of the DTCs set
6. Operate the vehicle within the Conditions for Running the DTC. You may also operate the vehicle within the conditions that you observed from the Freeze Frame/Failure Records data.
7. Verify DTC P2122, P2123, P2127, P2128, or P2138 is not set.
   If any DTC sets
   Refer to Circuit/System Testing
   If no DTCs set
8. All OK

Circuit/System Testing

1. Vehicle OFF and all vehicle systems OFF, disconnect the harness connector at the B107 accelerator pedal assembly. It may take up to 2 minutes for all vehicle systems to power down.
2. Test for less than 5 Ω between each low reference circuit terminal listed below and ground.
   - Low reference circuit terminal 4 or A
   - Low reference circuit terminal 5 or D

   If 5 Ω or greater
   2.1. Vehicle OFF, disconnect the harness connector at the K20 engine control module.
   2.2. Test for less than 2 Ω in the low reference circuit end to end.

If 2 Ω or greater, repair the open/high resistance in the circuit.
If less than 2 Ω, replace the K20 engine control module.

If less than 5 Ω

3. Vehicle in Service Mode.
4. Test for 4.8-5.2 V between each 5 V reference circuit terminal listed below and ground.
   - 5 V reference circuit terminal 1 or C
   - 5 V reference circuit terminal 2 or F

   If less than 4.8 V

   4.1. Vehicle OFF, disconnect the harness connector at the K20 engine control module.
   4.2. Test for infinite resistance between the 5 V reference circuit and ground.
   If less than infinite resistance, repair the short to ground on the circuit.
   If infinite resistance
   4.3. Test for less than 2 Ω in the 5 V reference circuit end to end.
   If 2 Ω or greater, repair the open/high resistance in the circuit.
   If less than 2 Ω, replace the K20 engine control module.

   If greater than 5.2 V

   4.1. Vehicle OFF, disconnect the harness connector at the K20 engine control module, vehicle in Service Mode.
   4.2. Test for less than 1 V between the 5 V reference circuit and ground.
   If 1 V or greater, repair the short to voltage on the circuit.
   If less than 1 V, replace the K20 engine control module.

If between 4.8-5.2 V

5. Verify each APP sensor voltage parameter is less than 0.2 V.

   If 0.2 V or greater

   5.1. Vehicle OFF, disconnect the harness connector at the K20 engine control module, vehicle in Service Mode.
   5.2. Test for less than 1 V between the signal circuit terminal listed below and ground.
   - APP sensor 1 signal circuit terminal 3 or E
   - APP sensor 2 signal circuit terminal 6 or B

   If 1 V or greater, repair the short to voltage on the circuit.
   If less than 1 V, replace the K20 engine control module.

If less than 0.2 V

6. Install a 3 A fused jumper wire between each signal circuit terminal listed below and the 5 V reference circuit terminal 1.
   - APP sensor 1 signal circuit terminal 3 or E
   - APP sensor 2 signal circuit terminal 6 or B
7. Verify the scan tool APP sensor voltage parameter is greater than 4.8 V.

   If 4.8 V or less

   7.1. Vehicle OFF, disconnect the harness connector at the K20 engine control module.

7.2. Test for infinite resistance between the signal circuit terminal and ground.
If less than infinite resistance, repair the short to ground on the circuit.
If infinite resistance
7.3. Test for less than 2 Ω in the signal circuit end to end.
If 2 Ω or greater, repair the open/high resistance in the circuit.
If less than 2 Ω, replace the K20 engine control module.

If greater than 4.8 V

8. Test or replace the B107 accelerator pedal assembly.

Repair Instructions

Perform the Diagnostic Repair Verification after completing the repair.

- Accelerator Pedal Position Sensor Replacement
- Control Module References for ECM replacement, programming and setup

&#169© Copyright Chevrolet. All rights reserved

DTC P219A

Diagnostic Instructions

- Perform the Diagnostic System Check - Vehicle prior to using this diagnostic procedure.
- Review Strategy Based Diagnosis for an overview of the diagnostic approach.
- Diagnostic Procedure Instructions provides an overview of each diagnostic category.

DTC Descriptor

DTC P219A: Fuel Trim Cylinder Balance Bank 1

Circuit/System Description

The Fuel Trim Cylinder Balance diagnostic detects a rich or lean cylinder to cylinder air/fuel ratio imbalance. The diagnostic monitors the heated oxygen sensor (HO2S) signal frequency and amplitude characteristics by calculating an accumulated voltage over a predetermined sample period. An imbalance is indicated when multiple samples of the accumulated voltage are consistently higher than the desired value.

Conditions for Running the DTC

- DTCs P0101, P0102, P0103, P0106, P0107, P0108, P0116, P0117, P0118, P0119, P0122, P0123, P0128, P0201 - P0204, P0222, P0223, P0300, P0301 - P0304, P0442, P0443, P0455, P0458, P0461, P0462, P0463, P16F3, P2101, P2135 are not set.
- A scan tool device control is not active.
- The intrusive diagnostics are not active.
- The engine overspeed protection is not active.
- The fuel control is in air-fuel Closed Loop status for greater than 1 s.
- The system voltage is greater than 10.9 V.
- The engine coolant temperature is greater than -20°C (-4°F).
- The engine speed is between 1,350-4,800 RPM.
- The fuel level is greater than 10%.

Conditions for Setting the DTC

Multiple samples of the pre-catalyst HO2S accumulated voltage are consistently greater than the desired value.

Action Taken When the DTC Sets

DTC P219A is a Type A DTC.

Conditions for Clearing the DTC

DTC P219A is a Type A DTC.

Diagnostic Aids

- The air fuel imbalance diagnostic is very sensitive to heated oxygen sensor (HO2S) design. An aftermarket sensor or an incorrect part number may cause a DTC to set.
- Monitoring the misfire current counters, or misfire graph, may help to isolate the cylinder that is causing the condition.
- Certain aftermarket air filters may cause a DTC to set.
- Certain aftermarket air induction systems or modifications to the air induction system may cause a DTC to set.
- Certain aftermarket exhaust system components may cause a DTC to set.

Reference Information

Schematic Reference

Engine Controls Schematics

Connector End View Reference

Component Connector End Views

Description and Operation

Hybrid Modes of Operation Description

Electrical Information Reference

- Circuit Testing
- Testing for Intermittent Conditions and Poor Connections
- Wiring Repairs
- Connector Repairs

DTC Type Reference

Powertrain Diagnostic Trouble Code (DTC) Type Definitions

Scan Tool Reference

Control Module References for scan tool information

Circuit/System Testing

1. Vehicle in Service Mode, observe the scan tool DTC information. Verify there are no other DTCs set.
   If a DTC is set, refer to Diagnostic Trouble Code (DTC) List - Vehicle for further diagnosis.
2. Engine running, observe the MAP sensor parameter. The reading should be between 14-110 kPa (2-16 PSI).
   If not within the specified range, refer to DTC P0106 .
3. Vehicle OFF, verify that none of the conditions listed below exists:
   - Inspect the air induction system for modified, damaged, leaking, or restricted components.
   - Inspect the crankcase ventilation system for improper operation.
   - Inspect the vacuum hoses for splits, kinks, and improper connections.
   - Inspect for vacuum leaks at the inlet manifold, the throttle body, and the fuel injector O-rings.
   - Test for a restricted, damaged, leaking, or modified exhaust system from the catalytic converter forward. Refer to Symptoms - Engine Exhaust .
   - Test the fuel injectors for improper operation. Refer to Fuel Injector Solenoid Coil Test .
   - Test for fuel contamination. Refer to Alcohol/Contaminants-in-Fuel Diagnosis .
   - Test for excessive fuel in the crankcase due to leaking injectors.
   - Test the ignition system for improper operation. Refer to Electronic Ignition System Diagnosis .
4. If all the above conditions test normal, test the engine for any mechanical conditions which could alter the flow into the combustion chamber. Refer to Symptoms - Engine Mechanical .

Repair Instructions

Perform the Diagnostic Repair Verification after completing the diagnostic procedure.

&#169© Copyright Chevrolet. All rights reserved

DTC P2400-P2402

Diagnostic Instructions

- Perform the Diagnostic System Check - Vehicle prior to using this diagnostic procedure.
- Review Strategy Based Diagnosis for an overview of the diagnostic approach.
- Diagnostic Procedure Instructions provides an overview of each diagnostic category.

DTC Descriptors

DTC P2400: Evaporative Emission (EVAP) System Leak Detection Pump Control Circuit

DTC P2401: Evaporative Emission (EVAP) System Leak Detection Pump Control Circuit Low Voltage

DTC P2402: Evaporative Emission (EVAP) System Leak Detection Pump Control Circuit High Voltage

Diagnostic Fault Information

Circuit	Short to Ground	Open/High Resistance	Short to Voltage
B+	P2400, P2419	P2400, P2418	-
Evaporative Emission System Leak Detection Pump Control	P2401	P2400	P2402

Circuit/System Description

The evaporative emission (EVAP) system uses an EVAP leak detection pump to test for system leaks. The EVAP leak detection pump assembly consists of the following components:

- EVAP leak detection pump with reference orifice
- EVAP leak detection pump switching valve
- EVAP leak detection pump pressure sensor

The ECM commands the EVAP leak detection pump control circuit through an internal switch called a driver. The ECM monitors the commanded and actual status of the

driver. If the ECM detects they do not match a DTC sets.

Conditions for Running the DTC

- The vehicle is ON.
- P2400, P2401 and P2402 run continuously when the above conditions are met.

Conditions for Setting the DTC

The ECM detects that the commanded state of the driver and the actual state of the control circuit do not match for a minimum of 5 s.

Action Taken When the DTC Sets

DTCs P2400, P2401 and P2402 are Type B DTCs.

Conditions for Clearing the DTC

DTCs P2400, P2401 and P2402 are Type B DTCs.

Diagnostic Aids

- The EVAP leak detection pump is very quiet. You might feel it running rather than hear it.
- The devices have to be in their commanded state.
- Where multiple DTCs set look for a common root cause like battery feeds, grounds, splices, etc.

Reference Information

Schematic Reference

Engine Controls Schematics

Connector End View Reference

Component Connector End Views

Description and Operation

Evaporative Emission Control System Description

Hybrid Modes of Operation Description

Electrical Information Reference

- Circuit Testing
- Connector Repairs
- Testing for Intermittent Conditions and Poor Connections
- Wiring Repairs

DTC Type Reference

Powertrain Diagnostic Trouble Code (DTC) Type Definitions

Scan Tool Reference

Control Module References for scan tool information

Circuit/System Verification

Note: This EVAP leak detection pump is very quiet. You might feel it running rather than hear it.

1. Vehicle in Service Mode, observe the EVAP leak detection pump output control parameters with a scan tool.
   - EVAP Leak Detection Pump Output Circuit High Voltage Test Status
   - EVAP Leak Detection Pump Output Circuit Open Test Status
   - EVAP Leak Detection Pump Output Circuit Low Voltage Test Status

   Each parameter should display OK or Not Run.
2. Operate the vehicle within the conditions for running the DTC to verify the DTC does not reset. You may also operate the vehicle within the conditions that you observed from the freeze frame/failure records data.

Circuit/System Testing

1. Vehicle OFF, disconnect the harness connector at the Q63 evaporative emission system leak detection pump.
2. Vehicle in Service Mode, verify that a test lamp illuminates between the battery circuit terminal 3 and ground.
   If the test lamp does not illuminate, test the battery circuit for a short to ground or an open/high resistance. If the circuit tests normal and the battery circuit fuse is open, test all components connected to the battery circuit and replace as necessary.
3. Test for 2.5-3.5 V between the control circuit terminal 4 and ground.
   If less than the specified range, test the control circuit for a short to ground or an open/high resistance. If the circuit/connections test normal, replace the K20 ECM.
   If greater than the specified range, test the control circuit for a short to voltage. If the circuit tests normal, replace the K20 ECM.

4. Command the EVAP leak detection pump ON and OFF with a scan tool. The DMM should transition from 2.5-3.5 V when commanded OFF, to less than 0.2 V when commanded ON.
   If not the specified values, replace the K20 ECM.
5. If all circuits test normal, test or replace the Q63 evaporative emission system leak detection pump.

Repair Instructions

Perform the Diagnostic Repair Verification after completing the diagnostic procedure.

- Evaporative Emission System Vacuum Leak Detection Pump Replacement
- Control Module References for ECM replacement, setup, and programming

&#169© Copyright Chevrolet. All rights reserved

DTC P2418-P2420

Diagnostic Instructions

- Perform the Diagnostic System Check - Vehicle prior to using this diagnostic procedure.
- Review Strategy Based Diagnosis for an overview of the diagnostic approach.
- Diagnostic Procedure Instructions provides an overview of each diagnostic category.

DTC Descriptors

DTC P2418: Evaporative Emission (EVAP) System Leak Detection Pump Switching Valve Control Circuit

DTC P2419: Evaporative Emission (EVAP) System Leak Detection Pump Switching Valve Control Circuit Low Voltage

DTC P2420: Evaporative Emission (EVAP) System Leak Detection Pump Switching Valve Control Circuit High Voltage

Diagnostic Fault Information

Circuit	Short to Ground	Open/High Resistance	Short to Voltage
B+	P2400, P2419	P2400, P2418	-
EVAP Leak Detection Pump Switching Valve Control	P2419	P2418	P2420

Circuit/System Description

The evaporative emission (EVAP) system uses an EVAP leak detection pump to test for system leaks. The EVAP leak detection pump assembly consists of the following components:

- EVAP leak detection pump with reference orifice
- EVAP leak detection pump pressure sensor
- EVAP leak detection pump switching valve

The engine control module (ECM) commands the EVAP leak detection pump switching valve to vent or not venting, pumping, position by a switch called a driver. The ECM

monitors the commanded state of the driver and the actual state of the control circuit. If they do not match it sets a DTC. The switching valve is located inside the EVAP leak detection pump and is non-serviceable.

Conditions for Running the DTC

P2418, P2419 and P2420 run continuously when the above conditions are met.

Conditions for Setting the DTC

The ECM detects that the commanded state of the driver and the actual state of the control circuit do not match for a minimum of 5 s.

Action Taken When the DTC Sets

DTCs P2418, P2419 and P2420 are Type B DTCs.

Conditions for Clearing the DTC

DTCs P2418, P2419 and P2420 are Type B DTCs.

Diagnostic Aids

- Where multiple DTCs set look for a common root cause like battery feeds, grounds, splices, etc.
- Indeterminate state will display if the device is not in a commanded state. This is not to be considered a failure. Use the scan tool to exercise the device.

Reference Information

Schematic Reference

Engine Controls Schematics

Connector End View Reference

Component Connector End Views

Description and Operation

Evaporative Emission Control System Description

Hybrid Modes of Operation Description

Electrical Information Reference

- Circuit Testing
- Connector Repairs
- Testing for Intermittent Conditions and Poor Connections
- Wiring Repairs

DTC Type Reference

Powertrain Diagnostic Trouble Code (DTC) Type Definitions

Scan Tool Reference

Control Module References for scan tool information

Circuit/System Verification

1. Vehicle in Service Mode, observe the EVAP leak detection pump switching valve parameters with a scan tool.
   - EVAP Leak Detection Pump Switching Valve Output Circuit High Voltage Test Status
   - EVAP Leak Detection Pump Switching Valve Output Circuit Open Test Status
   - EVAP Leak Detection Pump Switching Valve Output Circuit Low Voltage Test Status

   Each parameter should display OK or Not Run.
2. Operate the vehicle within the conditions for running the DTC to verify the DTC does not reset. You may also operate the vehicle within the conditions that you observed from the freeze frame/failure records data.

Circuit/System Testing

1. Vehicle OFF, disconnect the harness connector at the Q63 evaporative emission system leak detection pump.
2. Vehicle in Service Mode, verify that a test lamp illuminates between the battery voltage circuit terminal 5 and ground.
   If the test lamp does not illuminate, test the battery voltage circuit for a short to ground or an open/high resistance. If the circuit tests normal and the battery voltage circuit fuse is open, test all components connected to the battery voltage circuit and replace as necessary.
3. Test for 2.5-3.5 V between the control circuit terminal 1 and ground.
   If less than the specified range, test the control circuit for a short to ground or an open/high resistance. If the circuit/connections test normal, replace the K20 ECM.
   If greater than the specified range, test the control circuit for a short to voltage. If the circuit tests normal, replace the K20 ECM.
4. Command the EVAP Leak Detection Pump Switching Valve to Venting and Not Venting with a scan tool. The DMM should transition from 2.5-3.5 V when commanded to Venting, to less than 0.2 V when commanded to Not Venting.
   If not the specified values, replace the K20 ECM.
5. If all circuits test normal, test or replace the Q63 evaporative emission system leak detection pump.

Repair Instructions

Perform the Diagnostic Repair Verification after completing the diagnostic procedure.

- Evaporative Emission System Vacuum Leak Detection Pump Replacement
- Control Module References for ECM replacement, setup, and programming

&#169© Copyright Chevrolet. All rights reserved

DTC P2422

Diagnostic Instructions

- Perform the Diagnostic System Check - Vehicle prior to using this diagnostic procedure.
- Review Strategy Based Diagnosis for an overview of the diagnostic approach.
- Diagnostic Procedure Instructions provides an overview of each diagnostic category.

DTC Descriptors

DTC P2422: Evaporative Emission (EVAP) Vent Solenoid Valve Stuck Closed

Circuit/System Description

The EVAP vent solenoid valve controls fresh airflow into the EVAP canister. Battery voltage is supplied to the normally closed evaporative emission (EVAP) vent solenoid valve. The ECM commands the solenoid valve open (venting) or closed (not venting) by grounding the EVAP vent solenoid valve output circuit through an internal switch called a driver. The ECM monitors the EVAP leak detection pump pressure sensor, gauge, to determine if a EVAP system pressure (vacuum) is near or above the reference pressure (vacuum) after a calibrated period of time. The ECM uses this reference to determine if the valve is stuck and sets the DTC when the vacuum exceeds a calibrated threshold.

Conditions for Running the DTC

- DTCs P043E, P043, P0101, P0102, P0103, P0106, P0107, P0108, P0111, P0112, P0113, P0114, P0116, P0117, P0118, P0119, P0121, P0122, P0123, P0128, P012B, P012C, P012D, P145C, P145D, P145E, P0222, P0223, P0449, P0451 P0452, P0453, P0461, P0462, P0463, P0498, P0499, P0502, P0503, P06E4, P0722, P0723, P1221, P1458, P1459, P145A, P2066, P2067, P2068, P2400, P2401, P2402, P2418, P2419, P2420, P2421, P2422, P2450, P2537, P2610, U0073, U0074, U0140, U182D is not set.
- The EVAP purge valve is closed
- The EVAP vent solenoid transitions from closed to open to closed
- The EVAP leak detection pump switching valve in not venting, pump position
- The EVAP leak detection pump is ON
- The odometer greater than 15.9 km (9.9 mi)
- The barometric pressure (BARO) is between 70-110 kPa (10-16 PSI)

- The fuel level is between 10-90%
- The engine coolant temperature less than 40°C (104°F)
- The inlet air temperature is between -4 -45°C (25 -113°F)
- The system voltage greater than 10 V
- The vehicle speed less than 1.6 km/h (1 MPH)
- There is no key up during test
- The refuelling request button is not pressed
- The service bay test is not active
- The device control exceeds 0.5 s
- There are three possible time windows for this test to run. Up to that point and through this time period the propulsion system must not be active. These time windows are: 5.0, 7.0 or 9.5 hours.

Conditions for Setting the DTC

Sufficient pressure or vacuum exist in the fuel tank system.

- The fuel tank pressure (FTP) sensor indicates a pressure greater than 0.697 kPa (0.1 PSI) or a vacuum less than -0.697 kPa (-0.1 PSI) and the vent solenoid is commanded OPEN.
- The change in the FTP sensor reading is less than 1 kPa (0.15 PSI) after 10 s.

Or

No pressure or vacuum exists in the fuel tank system

- The FTP sensor indicates a pressure less than 0.697 kPa (0.1 PSI) or a vacuum greater than -0.697 kPa (-0.1 PSI) and the vent solenoid is commanded OPEN
- The EVAP leak detection pump is commanded ON
- The 0.020" reference orifice vacuum measurement minus the EVAP leak detection pump sensor, gauge, vacuum reading is less than 0.3 kPa (0.04 PSI) after 5 s.

Action Taken When the DTC Sets

DTC P2422 is a Type B DTCs.

Conditions for Clearing the DTC

DTC P2422 is a Type B DTCs.

Diagnostic Aids

- A P0451 or P0497 can set with the Vehicle ON, the engine running and a stuck valve.

- A P0451 or P2422 can set with the Vehicle in Service Mode and a stuck valve.

Reference Information

Schematic Reference

Engine Controls Schematics

Connector End View Reference

Component Connector End Views

Description and Operation

Evaporative Emission Control System Description

Hybrid Modes of Operation Description

Electrical Information Reference

- Circuit Testing
- Connector Repairs
- Testing for Intermittent Conditions and Poor Connections
- Wiring Repairs

DTC Type Reference

Powertrain Diagnostic Trouble Code (DTC) Type Definitions

Scan Tool Reference

Control Module References for scan tool information

Circuit/System Verification

1. Engine running, observe the DTC information with a scan tool. DTC P0449, P0498, or P0499 should not set.
2. Vehicle in Service Mode, command the EVAP vent solenoid valve ON and OFF with the scan tool. An audible click should be heard when the valve operates.
3. Vehicle in Service Mode, observe the EVAP vent solenoid valve output circuit parameters with a scan tool.
   - EVAP Vent Solenoid Valve Output Circuit High Voltage Test Status

- EVAP Vent Solenoid Valve Output Circuit Open Test Status
- EVAP Vent Solenoid Valve Output Circuit Low Voltage Test Status

  Each parameter should display OK or Not Run.

4. Operate the vehicle within the conditions for running the DTC to verify the DTC does not reset. You may also operate the vehicle within the conditions that you observed from the freeze frame/failure records data.

Component Testing

1. Vehicle OFF, disconnect the harness connector at the Q13 evaporative emission vent solenoid valve.
2. Test for 25.0-30.0 Ω between the control terminal 1 and the battery voltage terminal 2.
   If not within the specified range, replace the Q13 evaporative emission vent solenoid valve.
3. Test for no air flow through the Q13 evaporative emission vent solenoid valve by applying vacuum to the pump side of the valve. It should hold 1-2 in. Hg (3-7 kPa) for 30 s.
   If not within the specified range, replace the Q13 evaporative emission vent solenoid valve.
4. Reconnect the harness connector at the Q13 evaporative emission vent solenoid valve.
5. Energise the Q13 evaporative emission vent solenoid valve with a scan tool and apply vacuum to the pump side of the valve. It should not hold vacuum.
   If not within the specified range, replace the Q13 evaporative emission vent solenoid valve.

Repair Instructions

Perform the Diagnostic Repair Verification after completing the diagnostic procedure.

- Evaporative Emission Canister Vent Solenoid Valve Replacement
- Control Module References for ECM replacement, setup, and programming

&#169© Copyright Chevrolet. All rights reserved

DTC P2450

Diagnostic Instructions

- Perform the Diagnostic System Check - Vehicle prior to using this diagnostic procedure.
- Review Strategy Based Diagnosis for an overview of the diagnostic approach.
- Diagnostic Procedure Instructions provides an overview of each diagnostic category.

DTC Descriptors

DTC P2450: Evaporative Emission (EVAP) System Leak Detection Pump Switching Valve Performance

Circuit/System Description

The evaporative emission (EVAP) system uses a EVAP leak detection pump to test for system leaks. The EVAP leak detection pump assembly consists of the following components:

- EVAP leak detection pump with reference orifice
- EVAP leak detection pump switching valve
- EVAP leak detection pump pressure sensor

When the EVAP leak detection vacuum pump is ON, and the EVAP leak detection pump switching valve transitions from vent to not venting, pump, position, there should be an initial vacuum drop followed by a vacuum increase on a good system. The diagnostic looks for a difference relative to the reference vacuum, either an increase or decrease. No vacuum change indicates a problem with the EVAP leak detection pump switching valve and a P2450 is set. The switching valve is integral to the EVAP leak detection pump assembly and is non serviceable.

Conditions for Running the DTC

- DTCs P043E, P043F, P0451, P1458, P145C, P145D, P0101, P0102, P0103, P0106, P0107, P0108, P0111, P0112, P0113, P0114, P0116, P0117, P0118, P0119, P0121, P0122, P0123, P0128, P012B, P012C, P012D, P0222, P0223, P0449, P0452, P0453, P0461, P0462, P0463, P0498, P0499, P0502, P0503, P06E4, P0722, P0723, P1221, P1459, P145A, P2066, P2067, P2068, P2400, P2401, P2402, P2418, P2419, P2420, P2537, P2610, U0073, U0074, U0140, U182D and P2422 are not set.
- The purge solenoid valve is closed
- The vent solenoid valve is closed

- The vehicle is OFF
- The refuelling request button pressed
- A service bay test is not active
- The EVAP leak detection pump switching valve transitions from vent to not venting, pump position
- The EVAP leak detection vacuum pump is ON
- The odometer greater than 16 km (10 mi)
- The barometric pressure (BARO) is between 70-110 kPa (10-16 PSI)
- The fuel level is between 10-90%
- The engine coolant temperature is less than 40°C (104°F)
- The inlet air temperature is between 4-45°C (39-113°F)
- The system voltage is greater than 10 V
- The vehicle speed less than 1.6 km/h (1 MPH)
- There are three possible time windows for this test to run. Up to that point, and through this time period, the propulsion system must not be active. These time windows are: 5.0, 7.0 or 9.5 hours.

Conditions for Setting the DTC

The EVAP leak detection pump is commanded ON, and the EVAP leak detection pump switching valve transitions from vent to not venting, pump, position. If all conditions are not met after 5 s, then the EVAP leak detection pump switching value is stuck and the P2450 sets.

Action Taken When the DTC Sets

DTC P2450 is a Type B DTC.

Conditions for Clearing the DTC

DTC P2450 is a Type B DTC.

Reference Information

Schematic Reference

Engine Controls Schematics

Connector End View Reference

Component Connector End Views

Description and Operation

Evaporative Emission Control System Description

Hybrid Modes of Operation Description

Electrical Information Reference

- Circuit Testing
- Connector Repairs
- Testing for Intermittent Conditions and Poor Connections
- Wiring Repairs

DTC Type Reference

Powertrain Diagnostic Trouble Code (DTC) Type Definitions

Scan Tool Reference

Control Module References for scan tool information

Circuit/System Verification

1. Vehicle in Service Mode, observe the EVAP leak detection pump switching valve command parameter with a scan tool.
   The parameter should display Venting or Not Venting
2. Operate the vehicle within the conditions for running the DTC to verify the DTC does not reset. You may also operate the vehicle within the conditions that you observed from the freeze frame/failure records data.

Component Testing

Note: Ensure that the vehicle underbody temperature is similar to the ambient temperature and allow the surrounding air to stabilise before starting the diagnostic procedure.

1. Vehicle in Service Mode, command the EVAP Test with the scan tool and observe the following parameters.
   - The switching valve command status should change from Venting to Not Venting.
   - The EVAP leak detection pump command should show On
   - The EVAP vent solenoid valve command should show On
2. Observe and note the EVAP leak detection pump pressure and Fuel Tank Pressure.
   Both pressures should drop.
3. If status changes, but no pressure drop, remove the vent pipe and the fresh air pipe from the EVAP leak detection pump assembly.
   Look into the pump openings, inspect and repair any of the conditions listed below:

- The EVAP leak detection pump to the vent solenoid tube and clamps for damage or restriction
- Missing or damaged EVAP leak detection pump O-rings
- The fresh air tube near the fuel fill pocket for a restriction
- The fresh air tube for a restriction

4. If all components test normal, replace the Q63 EVAP leak detection pump assembly.

Repair Instructions

Perform the Diagnostic Repair Verification after completing the diagnostic procedure

- Evaporative Emission System Vacuum Leak Detection Pump Replacement
- Control Module References for ECM replacement, setup, and programming

&#169© Copyright Chevrolet. All rights reserved

DTC P2534 - Fuel Pump Control Module

Diagnostic Instructions

- Perform the Diagnostic System Check - Vehicle prior to using this diagnostic procedure.
- Review Strategy Based Diagnosis for an overview of the diagnostic approach.
- Diagnostic Procedure Instructions provides an overview of each diagnostic category.

DTC Descriptor

DTC P2534: Ignition 1 Switch Circuit Low Voltage

Diagnostic Fault Information

Circuit	Short to Ground	Open or High Resistance	Short to Voltage	Signal Performance
IGN Voltage	P2534	P2534	-	-

Circuit/System Description

The fuel pump control module monitors the ignition voltage circuit in order to determine if the voltage is within the normal operating range.

Conditions for Running the DTC

The engine is running.

Conditions for Setting the DTC

The FPCM detects that the IGN voltage is less than 6.0 V.

Action Taken When the DTC Sets

DTC P2534 is a Type A DTC.

Conditions for Clearing the DTC

DTC P2534 is a Type A DTC.

Reference Information

Schematic Reference

Engine Controls Schematics

Connector End View Reference

Component Connector End Views

Description and Operation

Fuel System Description

Electrical Information Reference

- Circuit Testing
- Connector Repairs
- Testing for Intermittent Conditions and Poor Connections
- Wiring Repairs

DTC Type Reference

Powertrain Diagnostic Trouble Code (DTC) Type Definitions

Scan Tool Reference

Control Module References for scan tool information

Circuit/System Testing

1. Verify that DTC P0562 is not set.
   If DTC P0562 is set, refer to Diagnostic Trouble Code (DTC) List - Vehicle .
2. Vehicle OFF, disconnect the harness connector of the K27 fuel pump control module.

3. Vehicle in Service Mode, verify that a test lamp illuminates between the ignition circuit terminal 21 and ground.
   If the test lamp does not illuminate, test the ignition circuit for a short to ground or an open/high resistance.
4. If all circuits test normal, replace the K27 fuel pump control module.

Repair Instructions

Perform the Diagnostic Repair Verification after completing the diagnostic procedure.

Control Module References for fuel pump control module replacement, programming and setup

© Copyright Chevrolet. All rights reserved

DTC P2537

Diagnostic Instructions

- Perform the Diagnostic System Check - Vehicle prior to using this diagnostic procedure.
- Review Strategy Based Diagnosis for an overview of the diagnostic approach.
- Diagnostic Procedure Instructions provides an overview of each diagnostic category.

DTC Descriptor

DTC P2537: Accessory Wakeup Serial Data 2

Diagnostic Fault Information

Circuit	Short to Ground	Open/High Resistance	Short to Voltage	Signal Performance
Accessory Wakeup Serial Data 2	C0561, P0335, P0700, P0AC4, P1E00, P2537, U0100, U1818, U1861	C0561, P0335, P0700, P0AC4, P1E00, P2537, U0100, U1818, U1861	P0AC4, P1E00	-

Circuit/System Description

The hybrid powertrain control module 2 supplies 12 V to the Accessory Wakeup Serial Data 2 circuit as a wakeup signal to the control modules listed below. This occurs when the body control module (BCM) signals the engine control module (ECM) that serial data is required.

- G1 A/C Compressor
- K1 14 V Power Module
- K16 Battery Energy Control Module (BECM)
- K17 Electronic Brake Control Module (EBCM)
- K20 Engine Control Module
- T6 Power Inverter Module
- T12 Transmission Control Module (TCM)
- T18 Battery Charger Control Module

Conditions for Running the DTC

- The propulsion system is active for greater than 0.5 s.
- The DTC runs once per ignition cycle when the above condition is met.

Conditions for Setting the DTC

The ECM detects that the state of the accessory line is low when it should be high.

Action Taken When the DTC Sets

DTC P2537 is a type B DTC.

Conditions for Clearing the DTC

DTC P2537 is a type B DTC.

Diagnostic Aids

A short to ground or an open/high resistance on the Accessory Wakeup Serial Data 2 circuit may set multiple no communication codes for high speed GMLAN control modules.

Reference Information

Schematic Reference

- Data Communication Schematics
- Engine Controls Schematics

Connector End View Reference

Component Connector End Views

Description and Operation

- Hybrid Modes of Operation Description
- Data Link Communications Description and Operation

Electrical Information Reference

- Circuit Testing
- Connector Repairs
- Testing for Intermittent Conditions and Poor Connections
- Wiring Repairs

Scan Tool Reference

Control Module References for scan tool information

Circuit/System Verification

1. Vehicle in Service Mode, observe the DTC information with a scan tool. DTC UXXXX should not be set.
   If a DTC is set, refer to Diagnostic Trouble Code (DTC) List - Vehicle for further diagnosis.
2. Observe the DTC information with a scan tool. DTC P2537 should not be set.
3. Operate the vehicle within the conditions for running the DTC to verify the DTC does not reset. You may also operate the vehicle within the conditions that you observed from the freeze frame/failure records data.

Circuit/System Testing

1. Vehicle OFF, disconnect the X2 harness connector at the K114B hybrid powertrain control module 2.
2. Vehicle in Service Mode, verify that a test lamp does not illuminate between the accessory wakeup serial data 2 circuit terminal 69 X2 of the harness connector and B+.
   If the test lamp illuminates, repair the circuit for a short to ground.
3. Connect a 3 A fused jumper wire between the accessory wakeup serial data 2 circuit terminal 69 X2 of the harness connector and B+. The scan tool Ignition Accessory Signal parameter should display ON.
   If the parameter does not display ON, repair the accessory wakeup serial data 2 circuit for an open/high resistance.
4. If all circuits test normal, replace the K20 ECM.

Repair Instructions

Perform the Diagnostic Repair Verification after completing the diagnostic procedure.

Control Module References for control module replacement, programming and setup

&#169© Copyright Chevrolet. All rights reserved

DTC P2618 or P2619

Diagnostic Instructions

- Perform the Diagnostic System Check - Vehicle prior to using this diagnostic procedure.
- Review Strategy Based Diagnosis for an overview of the diagnostic approach.
- Diagnostic Procedure Instructions provides an overview of each diagnostic category.

DTC Descriptors

DTC P2618: Crankshaft Position Signal Output Circuit Low Voltage

DTC P2619: Crankshaft Position Signal Output Circuit High Voltage

Diagnostic Fault Information

Circuit	Short to Ground	Open/High Resistance	Short to Voltage	Signal Performance
Crankshaft Position Sensor Output Circuit	P2618	P0AC4, P0335	C0242, C0561, P0335, P0606, P0700, P0AB9, P0AC4, P0AF8, P148A, P148C, P1E00, P2619, U0100, U0121, U1839, U186A, U1876, U1879	-

Circuit/System Description

The engine control module (ECM) outputs a signal through an output driver that replicates the crankshaft position signal. This output signal is used for the power inverter module. The ECM monitors the electrical integrity of the crankshaft position output signal to check for the signal being shorted to ground or shorted to power.

Conditions for Running the DTC

P2618

- The ignition voltage is greater than 11.0 V.
- The engine is not cranking.

- The crankshaft position output is commanded high.
- The DTC runs continuously when the above conditions are met.

P2619

- The ignition voltage is greater than 11.0 V.
- The engine is not cranking.
- The crankshaft position output is commanded low.
- The DTC runs continuously when the above conditions are met.

Conditions for Setting the DTC

The ECM detects that the commanded state of the driver and the actual state of the control circuit do not match for greater than 5 s.

Action Taken When the DTC Sets

DTCs P2618 and P2619 are Type B DTCs.

Conditions for Clearing the DTC

DTCs P2618 and P2619 are Type B DTCs.

Reference Information

Schematic Reference

Engine Controls Schematics

Connector End View Reference

Component Connector End Views

Description and Operation

- Electronic Ignition System Description
- Hybrid Modes of Operation Description

Electrical Information Reference

- Circuit Testing
- Connector Repairs
- Testing for Intermittent Conditions and Poor Connections
- Wiring Repairs

DTC Type Reference

Powertrain Diagnostic Trouble Code (DTC) Type Definitions

Scan Tool Reference

Control Module References for scan tool information

Circuit/System Verification

1. Engine running, observe the hybrid powertrain control module Engine Speed parameter with a scan tool. The reading should display an engine speed greater than 0 RPM.
2. Operate the vehicle within the conditions for running the DTC to verify the DTC does not reset. You may also operate the vehicle within the conditions that you observed from the freeze frame/failure records data.

Circuit/System Testing

Danger: Always perform the High Voltage Disabling procedure prior to servicing any High Voltage component or connection. Personal Protection Equipment (PPE) and proper procedures must be followed.

The High Voltage Disabling procedure will perform the following tasks:

- Identify how to disable high voltage.
- Identify how to test for the presence of high voltage.
- Identify condition under which high voltage is always present and personal protection equipment (PPE) and proper procedures must be followed.

Before working on any high voltage system, be sure to wear the following Personal Protection Equipment:

- Safety glasses with appropriate side shields when within 15 metres (50 feet) of the vehicle, either indoors or outdoors.
- Certified and up-to-date Class "0" Insulation gloves rated at 1000V with leather protectors.
  - Visually and functionally inspect the gloves before use.
  - Wear the Insulation gloves with leather protectors at all times when working with the high voltage battery assembly, whether the system is energised or not.

Failure to follow the procedures exactly as written may result in serious injury or death.

1. Vehicle OFF, disable high voltage at the A4 hybrid/EV battery pack. Refer to High Voltage Disabling .

2. Connect the 12 V battery.
3. Vehicle OFF, disconnect the X2 harness connector at the T6 power inverter module.
4. Vehicle in Service Mode, test for 0.04 V between the signal circuit terminal X2-5 and ground.
   If less than the specified range, test the signal circuit for a short to ground or an open/high resistance. If the circuit tests normal, replace the K20 ECM.
   If greater than the specified range, test the signal circuit for a short to voltage. If the circuit tests normal, replace the K20 ECM.

Repair Instructions

Perform the Diagnostic Repair Verification after completing the diagnostic procedure.

Control Module References for ECM or hybrid powertrain control module setup, and programming

&#169© Copyright Chevrolet. All rights reserved

DTC P2635 - Fuel Pump Control Module

Diagnostic Instructions

- Perform the Diagnostic System Check - Vehicle prior to using this diagnostic procedure.
- Review Strategy Based Diagnosis for an overview of the diagnostic approach.
- Diagnostic Procedure Instructions provides an overview of each diagnostic category.

DTC Descriptor

DTC P2635: Fuel Pump Flow Performance

Diagnostic Fault Information

Circuit	Short to Ground	Open/High Resistance	Short to Voltage	Signal Performance
Control	P0231	P023F	P0232	P023F, P2635
Low Reference	-	P023F	-	P023F, P2635

Circuit/System Description

The engine control module (ECM) supplies voltage to the fuel pump control module when the ECM detects that the ignition is on. The voltage from the ECM to the fuel pump control module remains active for 2 seconds, unless the engine is in crank or run. While this voltage is being received, the fuel pump control module closes the ground switch of the fuel pump and also supplies a varying voltage to the fuel tank pump module in order to maintain the desired fuel rail pressure.

Conditions for Running the DTC

- DTC P018B, P018C, P018D, P0231, P0232, P023F, P064A, P1255 or P06A6 are not active.
- DTC P0641 has not failed this ignition cycle.
- Fuel pump control is enabled and the fuel pump control state is normal.
- The system voltage is greater than 11 V.
- The engine has been running for more than 30 seconds.

- Low fuel level warning not present.

Conditions for Setting the DTC

This DTC sets when the fuel pump control module detects a predetermined fuel pressure performance degradation between the desired fuel rail pressure and the current fuel rail pressure.

Action Taken When the DTC Sets

DTC P2635 is a Type B DTC.

Conditions for Clearing the DTC

DTC P2635 is a Type B DTC.

Diagnostic Aids

Using the Failure Records data may help locate an intermittent condition. If you cannot duplicate the DTC, the information in the Failure Records can help determine how many miles since the DTC set. The Fail Counter and Pass Counter can help determine how many ignition cycles that the diagnostic test reported a pass and/or a fail.

On vehicles equipped with a high pressure mechanical pump on Direct Fuel Injection engines, the vehicle may continue to run even though the pump in the fuel tank is not operating.

Reference Information

Schematic Reference

Engine Controls Schematics

Connector End View Reference

Component Connector End Views

Description and Operation

Fuel System Description

Electrical Information Reference

- Circuit Testing
- Connector Repairs
- Testing for Intermittent Conditions and Poor Connections
- Wiring Repairs

DTC Type Reference

Powertrain Diagnostic Trouble Code (DTC) Type Definitions

Scan Tool Reference

Control Module References for scan tool information

Circuit/System Testing

Note: Do not replace the fuel pump control module based on a history DTC P2635. The DTC P2635 may be stored but that does not indicate a failure of the fuel pump control module. Refer to Strategy Based Diagnosis for further history DTC diagnostics.

1. Verify that DTCs P018C, P018D, P0231, P0232, or P023F are not set.
   If the DTC is set, refer to Diagnostic Trouble Code (DTC) List - Vehicle .
2. Vehicle OFF, disconnect the harness connector at the G12 fuel pump.
3. Vehicle OFF, test for less than 5.0 Ω between the G12 fuel pump low reference circuit terminal 2 and ground.
   If greater than the specified range, test the G12 fuel pump low reference circuit for a high resistance. If the circuit tests normal, replace the K27 fuel pump control module.
4. Vehicle OFF, install a test lamp between the control circuit terminal 1 and the low reference circuit terminal 2.
5. Vehicle in Service Mode, command the fuel pump ON and OFF with a scan tool. The test lamp should turn ON and OFF when changing between the commanded states.
   If the test lamp is always ON, test the control circuit for a short to voltage. If the circuit tests normal, replace the K27 fuel pump control module.
   If the test lamp is always OFF, test the control circuit for a short to ground or an open/high resistance. If the circuit tests normal, replace the K27 fuel pump control module.
6. Perform the Fuel System Diagnosis to verify proper fuel pressure.
   If the fuel pressure is not normal, replace the G12 fuel pump
7. If all circuits test normal, replace the K27 fuel pump control module.

Repair Instructions

Perform the Diagnostic Repair Verification after completing the repair.

- Fuel Tank Fuel Pump Module Replacement

- Control Module References for fuel pump control module replacement, programming and setup

© Copyright Chevrolet. All rights reserved

Symptoms - Engine Controls

Diagnostic Instructions

- Perform the Diagnostic System Check - Vehicle prior to using this diagnostic procedure.
- Review Strategy Based Diagnosis for an overview of the diagnostic approach.
- Diagnostic Procedure Instructions provides an overview of each diagnostic category.

Symptoms Description

Symptoms cover conditions that are not covered by DTCs. Certain conditions can cause multiple symptoms. These conditions are listed together under Symptoms Testing. Conditions that may only cause specific symptoms are listed separately under additional symptoms testing.

However, symptoms which affect the internal combustion engine (ICE) of a typical gas powered vehicle may not be noticeable on the Volt ICE. For the Volt ICE, symptoms such as, hesitation, sag, stumble, sluggishness, surging, and even engine stalling, are buffered by the Voltec propulsion system, which is designed to smooth out ICE irregularities. Even when the battery pack is depleted and the ICE is forced to run in order to sustain the charge, the battery pack should still have enough retained power to perform this buffering function. Refer to Hybrid Modes of Operation Description for more information.

Perform the symptoms testing before using the additional symptoms testing.

Symptoms Definition

Backfire: Fuel ignites in the inlet manifold or in the exhaust system, making a loud popping noise.

Cuts Out, Misfires: A steady pulsation or jerking that follows engine speed. The exhaust has a steady spitting sound.

Detonation/Spark Knock: A mild to severe ping which usually gets worse while under load. The engine makes sharp metallic knocks that change with throttle opening.

Dieseling, Run-On: The engine continues to run after the vehicle is turned OFF.

Engine Control Module (ECM) Commanded Reduced Engine Power: The ECM illuminates the Reduced Engine Power lamp and will limit engine power under potential engine damaging or emissions related conditions. A DTC may be not be set.

Fuel Odor: A noticeable smell of unburned fuel.

Hard Start: Engine does not start for a long time. The engine does eventually run, or may start but immediately stall.

Poor Fuel Economy: Fuel economy, as measured by an actual road test, is noticeably lower than expected. Also, the fuel economy is noticeably lower than it was on this vehicle at one time, as previously shown by an actual road test.

Poor Fuel Fill Quality: Difficulty when refuelling the vehicle.

Rough, Unstable Idle and/or Stalling: The engine runs unevenly. If severe, the engine or the vehicle may shake and the engine may stall.

Symptoms Verification

Before using the Symptom tables, perform the following inspections

- Verify the engine control module (ECM) and the malfunction indicator lamp (MIL) are operating correctly.
- Verify there are no DTCs stored.
- Verify the scan tool data is within the normal operating range.
- Verify there are no Bulletins available for the current symptom.
- Verify the vehicle tires are correctly inflated and meet original equipment specifications.
- Verify the Hybrid/EV Battery Pack state of charge. A low state of charge will force the engine to idle at a higher rpm. Refer to Plug-In Charging System Description and Operation .
- Perform the Visual/Physical Inspection in this section. The visual/physical inspection is extremely important, and can lead to correcting a condition without additional testing. It may also help to reveal the cause of an intermittent condition.

Identifying Intermittent Conditions

Many intermittent conditions occur with harness or connector movement due to engine torque, rough pavement, vibration or physical movements of a component. Refer to the following for a list of issues that may cause an intermittent condition:

- Moisture and water intrusion in connectors, terminals, and components
- Incomplete connector mating
- Poor terminal contact
- High circuit or component resistance-High resistance can include any resistance, regardless of the amount, which can interrupt the operation of the component.
- Harness that is too short or tight
- Wire insulation that is chaffed or cut
- High or low ambient temperature
- High or low engine coolant temperature
- High underhood temperature

- Excessive heat in a component or in a circuit due to circuit resistance, poor terminal contact, or high electrical load
- High or low system voltage
- High vehicle load conditions
- Rough road surfaces
- Electro-magnetic interference (EMI)/circuit interference from relays, solenoids or other electrical surge
- Incorrect installation of aftermarket, add on accessories

Visual/Physical Check

- Verify that the control module grounds are clean, tight, and correctly located.
- Verify that the vacuum hoses are not split or kinked, and are properly routed and connected.
- Verify that the air filter is clean and free from restrictions.
- Verify that there is no water intrusion in connectors, terminals, and components.
- Inspect the air inlet ducts for the following conditions:
  - Collapsed
  - Damaged areas
  - Looseness
  - Incorrect installation
  - Leaking
- Inspect for air leaks at the throttle body mounting area, the mass air flow (MAF) sensor and inlet manifold sealing surfaces.
- Inspect the wiring harness for the following conditions:
  - Poor connections
  - Pinches
  - Cuts
- Inspect for loose, damaged, unseated, or missing sensors/components.
- Inspect the terminals for corrosion and correct contact.

Symptoms Testing

Backfire, Cuts-Out, Misses, Detonation/Spark Knock, Dieseling/Run-On, ECM Commanded Reduced Engine Power, Fuel Odor, Hard Start, Poor Fuel Economy, Poor Fuel Fill Quality, or Rough, Unstable Idle and/or Stalling.

- Test or inspect the fuel system for the following conditions:
  - Incorrect operation, volume and pressure. Refer to Fuel System Diagnosis .
  - Leaking or improperly operating fuel injectors. Refer to Fuel Injector Solenoid Coil Test .

    Improper fuel quality. Refer to Alcohol/Contaminants-in-Fuel Diagnosis .

-

- Test or inspect the ignition system for the following conditions:

  Note: Observe the scan tool Cylinder 1-4 Current Misfire Counters and the Ignition Coil Control Circuit Status parameters to help isolate an ignition system condition.

  - Spark plugs for incorrect heat range, coolant or oil fouling, or an abnormal condition. Refer to Spark Plug Inspection and Spark Plug Replacement .
  - Secondary ignition system component susceptible to moisture. Wet down the secondary ignition system with water from a spray bottle. This may help locate damaged or deteriorated ignition system components. Look/listen for arcing or misfiring as the water is applied.
  - Weak spark. Use the J 26792 for testing and refer to Electronic Ignition System Diagnosis . For equivalent regional tools, refer to Special Tools : Diagnostic Tools .
- Test or inspect for the following conditions:
  - Items that can cause an engine to run lean or rich. Refer to DTC P0171 or P0172 for additional information.
  - An intermittent crankshaft position sensor condition. Observe the scan tool Crankshaft Position Resync Counter parameter. The Resync Counter parameter should remain at 0 during all operating conditions, and when moving the related harnesses and connectors between the crankshaft position sensor and the ECM.
  - Knock sensor system excessive spark retard activity. Observe the scan tool Knock Retard parameter for activity greater than 0° and refer to DTC P0324, P0326, or P06B6 and DTC P0325, P0327, or P0328 for further diagnosis.
  - Electromagnetic interference on the reference circuit, which can cause a misfire condition. You can usually detect electromagnetic interference with a scan tool by monitoring the engine speed parameter. A sudden increase in the engine speed parameter with little change in actual engine speed may be an indication that electromagnetic interference is present. Inspect the high voltage components near the ignition control circuit if a condition exists.
  - Inspect the heated oxygen sensors (HO2S) for contamination from fuel, silicon, or the incorrect use of RTV sealant. The sensors may have a white powdery coating resulting in a high, but false, signal voltage, which gives a rich exhaust indication.
  - A leaking or restricted positive crankcase ventilation system.
- Inspect the exhaust system components for the following:
  - Physical damage or possible internal malfunction.
  - Restricted 3-way catalysts.

  For more information, refer to Symptoms - Engine Exhaust
- Inspect the engine cooling system for the following conditions:
  - A thermostat with incorrect heat range. Refer to Thermostat Diagnosis .
  - Improperly operating engine cooling fans. Refer to DTC P1485-P1487 .
  - Improperly operating engine coolant thermostat heater. Refer to DTC P0597-P0599 .
  - Low engine coolant level. Refer to Cooling System Draining and Filling .
- Inspect the engine for the following mechanical failures:
  - Excessive oil in the combustion chamber or leaking valve seals
  - Incorrect cylinder compression
  - Sticking or leaking valves

  - Worn camshaft lobes
  - Incorrect valve timing
  - Broken valve springs
  - Excessive carbon buildup in the combustion chambers. Clean the chambers with top engine cleaner, if necessary. Follow the instructions on the can.
  - Incorrect engine parts
- If the above conditions do not address the symptom, refer to the additional symptoms tests.

Additional Symptoms Tests

Detonation/Spark Knock

- Test the engine for an overheating condition. Refer to Engine Overheating .
- Inspect for excessive carbon buildup in the combustion chambers. Clean the chambers with Top Engine Cleaner, if necessary. Follow the instructions on the can.

Engine Control Module (ECM) Commanded Reduced Engine Power

Review the scan tool Reduced Engine Power History parameter to determine the reason for the last reduced engine power event.

Fuel Odour

- Inspect for a Saturated EVAP canister. Refer to Evaporative Emission Control System Description .
- Inspect for a condition with the internal components of the fuel tank assembly. Refer to Fuel System Description .

Hard Start

- Test the engine coolant temperature (ECT) sensor. Compare the ECT sensor value to the inlet air temperature (IAT) sensor value on a cold engine. The ECT and IAT sensor values should be within approximately 3°C (5°F). If the ECT sensor is out of range with the IAT sensor, test the resistance of the ECT sensor. Refer to Temperature Versus Resistance for resistance specifications. Replace the ECT sensor if the resistance is not within specification. If the sensor is within the specification, test the ECT circuits for a high resistance.
- Test the fuel pump operation. The fuel pump should turn ON for 2 s when attempting to start the engine. Refer to Fuel Pump Electrical Circuit Diagnosis .
- Observe the Throttle Body Idle Airflow Compensation parameter with a scan tool. A value greater than 80 % may indicate an excessive accumulation of deposits in the throttle bore. Inspect the throttle body and bore and clean, if necessary. Refer to Throttle Body Inspection and Cleaning .

Poor Fuel Economy

- Inspect for heavy loads being carried or towed.
- Observe the Throttle Body Idle Airflow Compensation parameter with a scan tool. A value greater than 80 % may indicate an excessive accumulation of deposits in the

throttle bore. Inspect the throttle body and bore and clean, if necessary. Refer to Throttle Body Inspection and Cleaning .

Poor Fuel Fill Quality

- Inspect for restricted vent lines
- Inspect for high fuel temperature
- Inspect for a condition with the internal components of the fuel tank assembly

For more information, refer to the following:

- Engine Controls Schematics
- Fuel System Description
- Evaporative Emission Control System Description

Rough, Unstable Idle and/or Stalling

- Inspect the engine mounts. Refer to Engine Mount Inspection .
- Observe the Throttle Body Idle Airflow Compensation parameter with a scan tool. A value greater than 80 % may indicate an excessive accumulation of deposits in the throttle bore. Inspect the throttle body and bore and clean, if necessary. Refer to Throttle Body Inspection and Cleaning .

&#169© Copyright Chevrolet. All rights reserved

Poor Fuel Fill Quality

Condition	Causes
DEFINITION: During the fuelling process a continual, occasional or no fuel nozzle shut-off condition has occurred.	
Difficult to fill	• Fuel fill limiter vent valve stuck closed • Evaporative emission (EVAP) canister restricted • High fuel temperature • Fuel filler hose is kinked • Faulty dispensing nozzle
Over fill	• Fill limiter vent valve stuck open or leaking • Fuel inlet check valve stuck open
Pre-mature shut-off of the fuel dispensing nozzle occurs immediately after engaging dispensing nozzle, tank empty	• Restricted vapour lines or fuel fill pipe • High fuel temperature • Inlet check valve at tank stuck closed, fill pipe full of fuel • Fuel tank full, gauge not accurate
Pre-mature shut-off of the fuel dispensing nozzle, more than 1/8 of tank capacity dispensed	• Kinked, pinched or plugged lines in fuel tank vent system • EVAP canister restricted • Fuel limiting vent valve stuck closed or obstruction at top of fuel tank
Fuel Spitback	• Restricted EVAP canister • High fuel temperature

&#169© Copyright Chevrolet. All rights reserved

Malfunction Indicator Lamp (MIL) Diagnosis

Diagnostic Instructions

- Perform the Diagnostic System Check - Vehicle prior to using this diagnostic procedure.
- Review Strategy Based Diagnosis for an overview of the diagnostic approach.
- Diagnostic Procedure Instructions provides an overview of each diagnostic category.

Circuit/System Description

The malfunction indicator lamp (MIL) illuminates to inform the driver that an emission system fault has occurred and the engine control system requires service. Ignition voltage is supplied directly to the MIL and, when the emission system fault occurs, the engine control module (ECM) turns the MIL ON by grounding the MIL control circuit. Under normal operating conditions, the MIL should be ON only when the vehicle is ON and the engine is OFF.

Diagnostic Aids

If the condition is intermittent, move the related harnesses and connectors with the vehicle ON and the engine OFF, and with the engine running while monitoring the scan tool MIL control circuit status parameters. The MIL control circuit status parameters will change from OK or Not Run to Malfunction if there is a condition with the circuit or a connection.

Reference Information

Schematic Reference

- Engine Controls Schematics
- Instrument Cluster Schematics

Connector End View Reference

Component Connector End Views

Description and Operation

Hybrid Modes of Operation Description

Electrical Information Reference

- Circuit Testing
- Connector Repairs
- Testing for Intermittent Conditions and Poor Connections
- Wiring Repairs

Scan Tool Reference

Control Module References for scan tool information

Circuit/System Verification

Note: Any MIL requesting DTCs that may be set should be diagnosed first.

1. Engine running, command the MIL ON and OFF with a scan tool. The MIL should turn ON and OFF as commanded.
2. Command the MIL ON and OFF with a scan tool while observing the control circuit status parameters listed below:
   - MIL Control Circuit Low Voltage Test Status
   - MIL Control Circuit Open Test Status
   - MIL Control Circuit High Voltage Test Status

   Each parameter should display OK or Not Run.
3. Vehicle in Service Mode, command the MIL ON and OFF with a scan tool while observing the control circuit status parameters listed below:
   - MIL Control Circuit Low Voltage Test Status
   - MIL Control Circuit Open Test Status
   - MIL Control Circuit High Voltage Test Status

   Each parameter should display OK or Not Run.

Circuit/System Testing

1. Vehicle in Service Mode, verify that the P16 instrument cluster warning indicators are illuminated.
   If the P16 instrument cluster indicators are not illuminated, test the ignition circuit terminal 31 for a short to ground or an open/high resistance. If the circuit tests normal and the ignition circuit fuse is open, replace the P16 instrument cluster.
2. Vehicle OFF, disconnect the harness connector X1 at the K20 engine control module.
3. Vehicle in Service Mode, observe the MIL. The MIL should not illuminate.
   If the MIL is illuminated, test the control circuit terminal 52 X1 for a short to ground. If the circuit tests normal, replace the P16 instrument cluster.

4. Connect a 3 A fused jumper wire between the control circuit terminal 52 X1 and ground. The MIL should illuminate.
   If the MIL does not illuminate, test the control circuit for a short to voltage or an open/high resistance. If the circuit tests normal, replace the K20 engine control module.

Repair Instructions

Perform the Diagnostic Repair Verification after completing the diagnostic procedure.

- Instrument Cluster Replacement
- Control Module References for ECM replacement, setup, and programming

&#169© Copyright Chevrolet. All rights reserved

Engine Cranks But Does Not Run

Diagnostic Instructions

- Perform the Diagnostic System Check - Vehicle prior to using this diagnostic procedure.
- Review Strategy Based Diagnosis for an overview of the diagnostic approach.
- Diagnostic Procedure Instructions provides an overview of each diagnostic category.

Circuit/System Description

The engine cranks but does not run is an organised approach to identify a condition which prevents the engine from starting. This diagnostic directs the technician to the appropriate system diagnosis.

Diagnostic Aids

- When the engine is started, it is cranked by the 300 V drive motor/generator, which can rotate the engine to operating speed (800 RPM) within just a few hundred milliseconds. However, it may be difficult to determine the running state of the engine. Observe the scan tool ICE Status parameter to determine the running state of the engine. The parameter will display one of the following values:
  - Engine Stalled
  - Invalid
  - OFF
  - Running
  - Silent Start
  - Stop
  - Start
- Some failure conditions can make the engine appear to start, run briefly, then stall, which results in the following two DIC messages being displayed:
  - Engine Not Available, Service Vehicle Soon
  - Propulsion Power Reduced
- Inspect the engine for good secure electrical grounds.
- Insufficient fuel can prevent the engine from starting. Thoroughly inspect the fuel delivery system for sufficient fuel volume to the fuel injectors. Inspect the fuel supply components for partial blockage or restrictions.

- Fuel injectors with partially blocked and restricted nozzles, or a malfunctioning solenoid, can prevent the engine from starting. Refer to Fuel Injector Solenoid Coil Test .
- There may be fuel spray at the fuel injectors and the indicated fuel pressure may be correct, yet there may not be enough fuel for combustion to take place. If the fuel injectors and the injector circuit are OK, and fuel spray is detected, the fuel injector ON time may be inadequate. If the engine control module (ECM) receives incorrect inputs from the various information sensors, the fuel delivered by the fuel injectors may be inadequate for the engine to start. Check all the engine data parameters with a scan tool and compare the values indicated with the expected values or the values from a known vehicle in good condition.
- Inspect the engine for good secure electrical grounds.
- Water or foreign material in the fuel can prevent the engine from starting. During freezing weather, the water can freeze inside the fuel system. After 30 min in a heated repair shop, the water may melt and allow the engine to start. The malfunction may not recur until parked overnight in freezing temperatures.
- Under extreme weather conditions, or over a period of time, the ignition system may become susceptible to moisture. This condition may become serious enough to prevent the engine from starting. Bring the vehicle into a dry, heated garage and allow it to dry out for several hours. If the engine then starts, inspect for an ignition system that is susceptible to moisture.

Reference Information

Schematic Reference

Engine Controls Schematics

Connector End View Reference

Component Connector End Views

Description and Operation

Hybrid Modes of Operation Description

Electrical Information Reference

- Circuit Testing
- Connector Repairs
- Testing for Intermittent Conditions and Poor Connections
- Wiring Repairs

Scan Tool Reference

Control Module References for scan tool information.

Special Tools

- CH-48027 Digital Pressure Gauge.
- J 26792 HEI Spark Tester.
- J 36012-A Ignition System Diagnostic Harness.
- J 34730-2C Injector Tester.

For equivalent regional tools, refer to Special Tools : Diagnostic Tools .

Circuit/System Verification

Note: This diagnostic assumes the following:

- The battery is completely charged. See Battery Inspection/Test .
- There is adequate fuel in the fuel tank.

1. Attempt to start the engine while observing the DTC information with a scan tool. Verify that DTC P0117, P0118, P018B, P018C, P018D, P0119, P0121, P0122, P0123, P0222, P0223, P0231, P0232, P023F, P025A, P0335, P0336, P0513, P0562, P0563, P0601, P0602, P0603, P0604, P0606, P062F, P0628, P0629, P0633, P0641, P064A, P0685, P0689, P0690, P06A6, P1255, P1516, P1631, P1682, P16F3, P2101, P2119, P2135, P2176, P2610 or P2635 are not set.
   If any of the DTCs are set, refer to Diagnostic Trouble Code (DTC) List - Vehicle .
2. Attempt to start the engine while observing the scan tool Engine Speed parameter with a scan tool. The scan tool should indicate an engine speed greater than 0 RPM.
   If the engine speed is 0 RPM, refer to DTC P0335 or P0336 .
3. Vehicle in Service Mode, command the fuel pump enable ON with a scan tool while observing the circuit status parameters listed below:
   - Fuel Pump Enable Circuit High Voltage Test Status
   - Fuel Pump Enable Circuit Open Test Status
   - Fuel Pump Enable Circuit Low Voltage Test Status

   Each parameter should display OK or Not Run.

   If not the specified value, refer to Fuel Pump Electrical Circuit Diagnosis .
4. Vehicle OFF, install the CH-48027 . Refer to Fuel Pressure Gauge Installation and Removal .

   Note:
   - The fuel pump may need to be commanded ON a few times, in order to obtain the highest possible fuel pressure.
   - Do NOT start the engine for this test.

5. Vehicle in Service Mode, command the fuel pump enable ON with a scan tool. The fuel pressure should be between 365-414 kPa (53-60 PSI).
   If not within the specified range, refer to Fuel System Diagnosis .
6. Vehicle OFF, disconnect the harness connector at a Q17 Fuel Injector.
7. Connect the J 34730-2C to the fuel injector harness connector.
8. Vehicle ON, attempt to start the engine while observing the injector tester. The injector tester should flash or illuminate.
   If the injector tester does not flash or illuminate, refer to DTC P0201, P0202, P0203, or P0204 for further diagnosis.

Note: It may be necessary to secure the J 36012-A to the spark plug boots with electrical tape.

9. Install the J 36012-A to the spark plug boots.
10. Connect the J 26792 between the boot of a spark plug wire and ground.
11. Connect the remaining wires to the appropriate cylinders.

Note: An erratic or weak spark is considered a no spark condition.

12. Attempt to start the engine while observing the spark tester. The spark tester should spark.
    If there is no spark, refer to Electronic Ignition System Diagnosis .
13. Verify the following conditions do not exist:
    - Air inlet duct to the throttle body collapsed
    - Air filter and air inlet system restricted/obstructed
    - Spark plugs gas or coolant fouled
    - Skewed manifold absolute pressure (MAP) sensor
    - Skewed engine coolant temperature (ECT) sensor
    - Restricted exhaust system. Refer to Restricted Exhaust .
    - Fuel contamination. Refer to Alcohol/Contaminants-in-Fuel Diagnosis .
    - Engine mechanical condition, for example, worn timing chain or low compression. Refer to Symptoms - Engine Mechanical .

    If you find any of the above conditions, repair as necessary.

Repair Verification

Perform the Diagnostic Repair Verification after completing the diagnostic procedure.

- Ignition Coil Replacement
- Spark Plug Replacement

&#169© Copyright Chevrolet. All rights reserved

Fuel System Diagnosis

Diagnostic Instructions

- Perform the Diagnostic System Check - Vehicle prior to using this diagnostic procedure.
- Review Strategy Based Diagnosis for an overview of the diagnostic approach.
- Diagnostic Procedure Instructions provides an overview of each diagnostic category.

Circuit/System Description

The engine control module (ECM) supplies voltage to the fuel pump control module when power up is commanded. The voltage from the ECM to the fuel pump control module remains active for two seconds, unless the engine is in Crank or Run. While this voltage is being received, the fuel pump control module closes the ground switch of the fuel pump and also supplies a varying voltage to the fuel tank fuel pump module in order to maintain the desired fuel line pressure.

The fuel system is an electronic returnless on-demand design. A returnless fuel system reduces the internal temperature of the fuel tank by not returning hot fuel from the engine to the fuel tank. Reducing the internal temperature of the fuel tank results in lower evaporative emissions.

The fuel tank stores the fuel supply. An electric turbine style fuel pump attaches to the fuel tank fuel pump module inside the fuel tank. The fuel pump supplies high pressure fuel through the fuel feed pipe to the fuel injection system. The fuel pump also supplies fuel to a venturi pump located on the bottom of the fuel tank fuel pump module. The function of the venturi pump is to fill the fuel tank fuel pump module reservoir. The fuel tank fuel pump module contains a reverse flow check valve. The check valve maintains fuel pressure in the fuel feed pipe and the fuel rail in order to prevent long cranking times.

Reference Information

Description and Operation

- Fuel System Description
- Hybrid Modes of Operation Description

Electrical Information Reference

- Circuit Testing
- Connector Repairs

- Testing for Intermittent Conditions and Poor Connections
- Wiring Repairs

Scan Tool Reference

Control Module References for scan tool information

Special Tools

- *CH 48027* Digital Pressure Gauge
- *EN 37287* Fuel Line Shut-Off Adapters

For equivalent regional tools, refer to Special Tools : Diagnostic Tools .

Circuit/System Verification

Note:
- Inspect the fuel system for damage or external leaks before proceeding.
- Verify that adequate fuel is in the fuel tank before proceeding.
- The scan tool Fuel Pump Enable may need to be commanded ON a few times in order to obtain the highest possible fuel pressure.
- Before proceeding with this test review the User Manual CH 48027-5 for Safety Information and Instructions.

1. Vehicle in Service Mode, observe the DTC information with a scan tool. DTC P018B, P018C, P018D, P0231, P0232, P023F, P025A, P0562, P0563, P0601-P0604, P0606, P062F, P0641, P064A, P06A6, P1255, P2534, P2635, U0073, U0100 or U0140 should not be set.
   If a DTC is set, refer to Diagnostic Trouble Code (DTC) List - Vehicle .
2. Vehicle OFF, all accessories OFF, install a *CH 48027* Gauge . Refer to Fuel Pressure Gauge Installation and Removal

   Note: DO NOT perform the Fuel System Diagnosis if the engine coolant temperature is above 60°C (150°F). High fuel pressure readings may result due to hot soak fuel boiling. With the engine OFF, the fuel pressure may increase beyond the pressure relief regulator valve's setting point of 690 kPa (100 psi) ± 5 percent.

3. Vehicle in Service Mode, command the Fuel Pump Enable ON with a scan tool.
4. Verify the fuel pressure is between 379-427 kPa (55-62 psi) with the fuel pump operating.
5. Engine running at normal operating temperature, the Fuel Pump Control Module Fuel Pressure Sensor parameter should read between 296-310 kPa (43-45 psi).

Circuit/System Testing

Note:
- The scan tool Fuel Pump Enable may need to be commanded ON a few times in order to obtain the highest possible fuel pressure.
- DO NOT start the engine.

1. Vehicle in Service Mode, command the Fuel Pump Enable ON with a scan tool.
2. Observe the fuel pressure gauge while the fuel pump is operating. Verify the fuel pressure is between 379-427 kPa (55-62 psi).
   If the fuel pressure is greater than the specified range, replace the fuel tank fuel pump module.
   If the fuel pressure is less than the specified range, test, inspect, and repair the items listed below. If all items test normal, replace the fuel tank fuel pump module.
   - Restricted fuel feed pipe
   - Inspect the harness connectors and the ground circuits of the fuel pump for poor connections.
3. Verify that the fuel pressure does not decrease more than 34 kPa (5 psi) in 1 minute.
   If the fuel pressure decreases more than the specified value, perform the following procedure:
   3.1. Vehicle OFF, relieve the fuel pressure.
   3.2. Install the *EN 37287* Adapter between the fuel feed pipe and the fuel rail.
   3.3. Open the valve on the *EN 37287* Adapter .
   3.4. Vehicle in Service Mode, command the Fuel Pump Enable ON with a scan tool and bleed the air from the *CH 48027* Gauge .
   3.5. Command the Fuel Pump Enable ON and then OFF with a scan tool.
   3.6. Close the valve on the *EN 37287* Adapter .
   3.7. Monitor the fuel pressure for 1 minute.
   If the fuel pressure decreases more than 34 kPa (5 psi) within the specified time, locate and replace the leaking fuel injector(s).
   If the fuel pressure does not decrease more than 34 kPa (5 psi) within the specified time, replace the fuel tank fuel pump module.
4. Relieve the fuel pressure to 69 kPa (10 psi).
5. Verify that the fuel pressure does not decrease more than 14 kPa (2 psi) in 5 minutes.
   If the fuel pressure decreases more than the specified value, replace the fuel tank fuel pump module.
6. Operate the vehicle within the conditions of the customer's concern while monitoring the fuel pressure with the *CH 48027* Gauge . The fuel pressure should not drop off during acceleration, cruise or hard cornering.
   If the fuel pressure drops off, test, inspect, and repair the items listed below. If all items test normal, replace the fuel tank fuel pump module.
   - Restricted fuel feed pipe
   - Inspect the harness connectors and the ground circuits of the fuel pump for poor connections
7. If the fuel system tests normal, refer to Symptoms - Engine Controls , Fuel Injector Solenoid Coil Test , and Fuel Injector Balance Test .

Repair Instructions

Perform the Diagnostic Repair Verification after completing the diagnostic procedure.

- Fuel Feed Pipe Replacement : Chassis → Engine Compartment
- Fuel Injector Replacement
- Fuel Tank Fuel Pump Module Replacement

&#169© Copyright Chevrolet. All rights reserved

Fuel Pump Electrical Circuit Diagnosis

Diagnostic Instructions

- Perform the Diagnostic System Check - Vehicle prior to using this diagnostic procedure.
- Review Strategy Based Diagnosis for an overview of the diagnostic approach.
- Diagnostic Procedure Instructions provide an overview of each diagnostic category.

Diagnostic Fault Information

Circuit	Short to Ground	Open/High Resistance	Short to Voltage	Signal Performance
Fuel Pump High Signal	P0231	P023F	P0232	P023F, P2635
Fuel Pump Low Signal	-	P023F	-	P023F, P2635

Circuit/System Description

The engine control module (ECM) supplies voltage to the fuel pump control module when the ECM detects that the ignition is on. The voltage from the ECM to the fuel pump control module remains active for two seconds, unless the engine is in crank or run. While this voltage is being received, the fuel pump control module closes the ground switch of the fuel pump and also supplies a varying voltage to the fuel tank pump module in order to maintain the desired fuel rail pressure.

Reference Information

Schematic Reference

Engine Controls Schematics

Connector End View Reference

Component Connector End Views

Description and Operation

Fuel System Description

Electrical Information Reference

- Circuit Testing
- Connector Repairs
- Testing for Intermittent Conditions and Poor Connections
- Wiring Repairs

DTC Type Reference

Powertrain Diagnostic Trouble Code (DTC) Type Definitions

Scan Tool Reference

Control Module References for scan tool information

Circuit/System Verification

Vehicle in Service Mode, command the fuel pump ON and OFF using the scan tool ECM output control. The fuel pump should turn on and off.

Circuit/System Testing

1. Vehicle OFF, disconnect the harness connector at the G12 fuel pump.
2. Connect a test lamp between the control circuit terminal 1 and ground.
3. Vehicle in Service Mode, command the G12 fuel pump ON and OFF using a scan tool ECM fuel pump output control. The test lamp should turn ON and OFF, as commanded.
   If the test lamp is always ON, test the control circuit for a short to voltage. If the circuit tests normal, replace the K27 fuel pump control module.
   If the test lamp is always OFF, test the control circuit for a short to ground or an open/high resistance. If the circuit tests normal, replace the K27 fuel pump control module.
4. Vehicle OFF, connect a test lamp between the control circuit terminal 1 and the low reference circuit terminal 2.
5. Vehicle in Service Mode, command the G12 fuel pump ON using a scan tool. The test lamp should illuminate.
   If the test lamp does not illuminate, test the low reference circuit terminal 1 for a short-circuit to voltage or an open/high resistance. If the circuit tests normal, replace the K27 fuel pump control module.
6. If all circuits test normal, replace the G12 fuel pump.

Repair Instructions

Perform the Diagnostic Repair Verification after completing the diagnostic procedure.

- Fuel Tank Fuel Pump Module Replacement
- Control Module References for fuel pump control module replacement, programming and setup

&#169© Copyright Chevrolet. All rights reserved

Fuel Injector Solenoid Coil Test

Diagnostic Instructions

- Perform the Diagnostic System Check - Vehicle prior to using this diagnostic procedure.
- Review Strategy Based Diagnosis for an overview of the diagnostic approach.
- Diagnostic Procedure Instructions provides an overview of each diagnostic category.

Circuit/System Description

The engine control module (ECM) enables the appropriate fuel injector pulse for each cylinder. The ignition voltage is supplied directly to the fuel injectors. The ECM controls each fuel injector by grounding the control circuit via a solid state device called a driver. A fuel injector coil winding resistance that is too high or too low will affect the engine driveability. A fuel injector control circuit DTC may not set, but a misfire may be apparent. The fuel injector coil windings are affected by temperature. The resistance of the fuel injector coil windings will increase as the temperature of the fuel injector increases.

Reference Information

Schematic Reference

Engine Controls Schematics

Connector End View Reference

Component Connector End Views

Description and Operation

Hybrid Modes of Operation Description

Electrical Information Reference

- Circuit Testing
- Connector Repairs

- Testing for Intermittent Conditions and Poor Connections
- Wiring Repairs

Component Testing

Verify the resistance of each Q17 fuel injector with one of the following methods:

- If the engine coolant temperature (ECT) sensor is between 10-32°C (50-90°F), the resistance of each fuel injector should be 11-14 Ω. If the injectors measure OK, perform the Fuel Injector Balance Test. Refer to Fuel Injector Balance Test .
  If not within the specified range, replace the Q17 fuel injector.
- If the ECT sensor is not between 10-32°C (50-90°F), measure and record the resistance of each fuel injector. Subtract the lowest resistance value from the highest resistance value. The difference between the lowest value and the highest value should be equal to or less than 3 Ω. If the injectors measure OK, perform the Fuel Injector Balance Test. Refer to Fuel Injector Balance Test .
  If not within the specified range, add all of the fuel injector resistance values to obtain a total resistance value. Divide the total resistance value by the number of fuel injectors to obtain an average resistance value. Subtract the lowest individual fuel injector resistance value from the average resistance value. Compute the difference between the highest individual fuel injector resistance value and the average resistance value. Replace the Q17 fuel injector that displays the greatest difference above or below the average.

Repair Instructions

Perform the Diagnostic Repair Verification after completing the diagnostic procedure.

Fuel Injector Replacement

&#169© Copyright Chevrolet. All rights reserved

Fuel Injector Balance Test

Diagnostic Instructions

- Perform the Diagnostic System Check - Vehicle prior to using this diagnostic procedure.
- Review Strategy Based Diagnosis for an overview of the diagnostic approach.
- Diagnostic Procedure Instructions provide an overview of each diagnostic category.

Circuit/System Description

When performing the fuel injector balance test, the scan tool is first used to energise the fuel pump. The scan tool is then used to pulse each injector for a precise amount of time, allowing a measured amount of fuel to be injected. This causes a drop in the system fuel pressure that can be recorded and used to compare each injector.

Diagnostic Aids

- Monitoring the Cylinder 1-4 Current Misfire Counters may help to isolate the fuel injector that is causing the condition.
- Operating the vehicle over a wide temperature range may help isolate the fuel injector that is causing the condition.

Reference Information

Schematic Reference

Engine Controls Schematics

Connector End View Reference

Component Connector End Views

Description and Operation

Hybrid Modes of Operation Description

Electrical Information Reference

- Circuit Testing
- Connector Repairs
- Testing for Intermittent Conditions and Poor Connections
- Wiring Repairs

Scan Tool Reference

Control Module References for scan tool information

Special Tools

CH 48027 Digital Pressure Gauge

For equivalent regional tools, refer to Special Tools : Diagnostic Tools .

Note:
- DO NOT perform this test if the engine coolant temperature (ECT) is above 94°C (201°F). Irregular fuel pressure readings may result due to hot soak fuel boiling.
- Verify that adequate fuel is in the fuel tank before proceeding with this diagnostic.
- Before proceeding with this test review the User Manual CH 48027-5 for Safety Information and Instructions.

Fuel Injector Balance Test with Scan Tool

1. Verify the correct fuel system pressure. Refer to Fuel System Diagnosis .
2. Vehicle in Service Mode, command the Fuel Pump Enable ON and then OFF three times with a scan tool. On the last command, as the fuel pressure begins to slowly degrade and stabilise, select a fuel pressure within 34 kPa (5 psi) of the maximum pump pressure. Record this fuel pressure. This is the starting pressure at which you will pulse each injector.
3. With a scan tool, select the Fuel Injector Balance function within the Control Functions menu.
4. Select an injector to be tested.
5. Energise the fuel injector by depressing the Pulse Injector button on the scan tool at the previously selected pressure.
6. After the injector stops pulsing, select Min from the Display Mode on the *CH 48027* Gauge and record the Min pressure.

   Note: New test results will not be recorded if the Min/Max results are not cleared after each injector is tested.

7. Clear the Min/Max results on the *CH 48027* Gauge.
8. Select Normal from the Display Mode on the *CH 48027* Gauge.
9. Press Continue on the scan tool to select the next injector.
10. Repeat steps 4 through 9 for each fuel injector.
11. Subtract the minimum pressure from the starting pressure for one fuel injector. The result is the pressure drop value.
12. Obtain a pressure drop value for each fuel injector.

13. Add all of the individual pressure drop values except for the injector suspected of being faulty. This is the total pressure drop.
14. Divide the total pressure drop by the number of fuel injectors that were added together. This is the average pressure drop. The difference between any individual pressure drop and the average pressure drop should not be more than 20 kPa (3 psi).
    If the difference between any individual pressure drop and the average pressure drop is more than 20 kPa (3 psi), replace the fuel injector.

Repair Instructions

Perform the Diagnostic Repair Verification after completing the diagnostic procedure.

Fuel Injector Replacement

&#169© Copyright Chevrolet. All rights reserved

Alcohol/Contaminants-in-Fuel Diagnosis

Diagnostic Instructions

- Perform the Diagnostic System Check - Vehicle
- Review Strategy Based Diagnosis
- Diagnostic Procedure Instructions

Test Description

Water contamination in the fuel system may cause an engine to stall, not to start, or misfire in one or more cylinders. Water may collect near a single fuel injector at the lowest point in the fuel injection system, and cause a misfire in that cylinder. If the fuel system is contaminated with water, inspect the fuel system components for rust or deterioration.

Ethanol concentrations of greater than 10 percent can cause engine operating conditions and fuel system deterioration. Fuel with more than 10 percent ethanol may result in engine operating conditions such as a no start. Excessive concentrations of ethanol used in an engine not designed for it may cause fuel system corrosion, deterioration of rubber components, and fuel filter restriction.

Reference Information

Special Tools

CH 44175-A Fuel Composition Tester

For equivalent regional tools, refer to Special Tools : Diagnostic Tools .

System Verification

The fuel sample should be drawn from the bottom of the tank so that any water present in the tank will be detected. The sample should be bright and clear.

If the sample appears cloudy, or contaminated with water, as indicated by a water layer at the bottom of the sample, perform the Particulate Contaminants in Fuel Testing Procedure.
If alcohol contamination is suspected, perform the Alcohol in Fuel Testing procedure.

Alcohol in Fuel Testing with Special Tool

1. Test the fuel composition using *CH 44175-A* Fuel Composition Tester and Instruction Manual.
2. If water appears in the fuel sample, clean the fuel system.
3. Subtract 50 from the reading on the DMM in order to obtain the percentage of alcohol in the fuel sample.
4. If the fuel sample contains more than 15 percent ethanol, add fresh, regular gasoline to the vehicle's fuel tank.
5. Test the fuel composition.
6. If testing shows the ethanol percentage is still more than 15 percent, replace the fuel in the vehicle.

Alcohol in Fuel Testing without Special Tool

1. Using a 100 ml (3.38 oz) specified cylinder with 1 ml (0.034 oz) graduation marks, fill the cylinder with fuel to the 90 ml (3.04 oz) mark.
2. Add 10 ml (0.34 oz) of water in order to bring the total fluid volume to 100 ml (3.38 oz) and install a stopper.
3. Shake the cylinder vigorously for 10-15 seconds.
4. Carefully loosen the stopper in order to release the pressure.
5. Re-install the stopper and shake the cylinder vigorously again for 10-15 seconds.
6. Put the cylinder on a level surface for approximately 5 minutes in order to allow adequate liquid separation. If alcohol is present in the fuel, the volume of the lower layer, which would now contain both alcohol and water, will be more than 10 ml (0.34 oz). For example, if the volume of the lower layer is increased to 15 ml (0.51 oz), this indicates at least 5 percent alcohol in the fuel. The actual amount of alcohol may be somewhat more because this procedure does not extract all of the alcohol from the fuel.

Particulate Contaminants in Fuel Testing Procedure

1. Using an approved fuel container, draw approximately 0.5 liter (0.53 qt) of fuel.
2. Place the container on a level surface for approximately 5 minutes in order to allow settling of the particulate contamination. Particulate contamination will show up in various shapes and colours. Sand will typically be identified by white or light brown crystals. Rubber will appear as black and irregular particles.
3. Observe the fuel sample. If any physical contaminants or water are present, clean the fuel system.

Repair Instructions

Perform the Diagnostic Repair Verification after completing the diagnostic procedure.

Fuel Tank Draining

&#169© Copyright Chevrolet. All rights reserved

Evaporative Emission Control System Diagnosis

Reference Information

Special Tools

EN 41413-VLV EVAP Service Port Vent Fitting

For equivalent regional tools, refer to Special Tools : Diagnostic Tools .

Operating Instructions for the Evaporative Emission System Tester

Vehicle Setup

Note: A large difference between the vehicle temperature and shop temperature will seriously affect the accuracy of the tests. Always allow enough time, at least 15 m, for the vehicle temperature to adjust to the shop temperature.

Note: If the refuelling request button is pushed then the vent solenoid valve will remain open for 30 mins. The scan tool will be required to manually close the vent solenoid valve prior to testing and before the 30 min time expires. After 30 min the vent solenoid returns to it's natural closed state.

Note: If fuel level is 90% or greater it will take longer to fill the system with smoke because the fuel fill tube check valve will be closed and force any smoke to pass through the ORVR pipe and orifice.

1. Vehicle in Service Mode, open the bonnet. Position a large fan to blow air under the vehicle onto the fuel tank area.
2. Connect the red battery clip from the tester to the positive battery terminal at the underhood auxiliary fuse block X50B.

   Note: The vehicle 12 V battery must be fully charged for optimal tester performance and because every module will be awake in this powered mode.

3. Connect the black battery clip of the tester to chassis ground.

Flow Meter Test - Leak Detection

1. Open the nitrogen tank valve and turn the nitrogen/smoke valve on the front control panel to nitrogen.
2. Connect the hose to the correct test orifice on the bottom front of the tester. For orifice size, refer to the vehicle specific information found in the service procedures for DTCs that relate to evaporative emission (EVAP) system leaks.

3. Press and release the remote switch to activate the tester.
4. Position the sliding red flag on the flow meter to align with the floating indicator. When the red flag is set, press and release the remote switch to deactivate the tester.
5. Remove the hose from the test orifice and install the hose onto the vehicle. For proper connection location, and the special tool numbers for any adapters that may be required, refer to the service manual for the vehicle being tested. The vehicle specific information can be found in service procedures for DTCs that relate to EVAP system leaks.
6. Seal the EVAP system per instructions in the service manual. Most systems can be sealed using a scan tool output control for the evaporative emission (EVAP) canister vent solenoid valve. Other systems require that the system be plugged. Refer to the service manual for the vehicle being tested for specific instructions.

   Note:
   - Larger volume fuel tanks, and/or those with lower fuel levels, may require several minutes to fill with nitrogen.
   - Static buildup may cause the float indicator to stick. It may be necessary to tap on the flow meter to free the float.

7. Press and release the remote switch to activate the nitrogen flow and fill the system.
8. Compare the stable floating indicator position to the red flag. The floating indicator should be below the red flag. If above the red flag, go to the smoke procedure.
9. Press and release the remote switch to deactivate the tester.

Smoke Procedure - Locate the Leak

Note: It is not recommended to use the tester in an outside repair bay area because wind and sunlight may affect temperature and your ability to see the smoke.

1. Turn OFF any fans that may cause air movement around or near the vehicle.

   Note: Completely unwind the nitrogen/smoke hose from the bracket for optimal tester performance.

2. Connect the nitrogen/smoke hose to the vehicle as directed in the service manual. Some vehicles require that the nitrogen/smoke hose be connected at the front of the EVAP system at the EVAP service port. An adapter may be necessary. Other vehicles require the connection be made at the rear of the system using an adapter at the fuel fill cap. Consult the service manual for vehicle specific instructions regarding connection location and adapters.
3. Open the nitrogen tank valve and turn the nitrogen/smoke valve on the control panel to smoke.

   Note: The remote switch operates in a push ON, push OFF fashion.

4. Press and release the remote switch to activate the tester and inject smoke into the EVAP system.
5. Verify smoke has filled the EVAP system by opening the system opposite the end where smoke is injected. When injecting smoke at the service port, remove the fuel fill cap and temporarily leave the evaporative emission (EVAP) canister vent solenoid valve open, and EVAP leak detection pump switching valve in the vent position, until smoke is observed. Then close the system and continue testing. If using a special tool fuel fill cap adapter at the filler neck, use the *EN 41413-VLV* EVAP Service Port Vent Fitting tool at the service port until smoke is observed, then remove the *EN 41413-VLV* EVAP Service Port Vent Fitting tool and continue with the test.

   Note: Inject smoke in less than 2 min cycles for optimal tester performance.

6. Press and release the remote switch to deactivate the tester.

   Note: For optimal visual smoke performance, deactivate the smoke flow and allow the system pressure to drop. Allowing the smoke to exit through small holes at a low

flow rate greatly enhances visibility.

7. Introduce smoke into the system for an additional 60 s. Continue introducing smoke at 15 s intervals, as necessary.
8. Using a high-intensity white light, inspect the entire EVAP system path, and look for the source of the leak indicated by the exiting smoke. Introduce smoke at 15 s intervals, as needed, until the source of the leak is identified.

Temperature Variation Instructions

The Concern

Ideal circumstances for conducting the EVAP flow meter test require equal temperatures between the nitrogen gas and the vehicle EVAP system. Significant differences in temperature between them can result in a flow or pressure change during testing, causing misleading results. Typically, the evaporative emissions system tester is stored indoors, approximately 21°C (70°F). Vehicles brought in for diagnosis may have an EVAP system at significantly different temperatures -40 to +43°C (-40 to +110°F).

For Example

Note: With no temperature difference between the nitrogen gas and EVAP system, the resulting vehicle EVAP system pressure will remain stable at 3.2 kPa (22.3 PSI) once pressurised, providing no leaks are present.

When the EVAP flow meter tests are performed with significant differences in temperature between the nitrogen gas and the vehicle EVAP system, the following results can occur:

- An increase in flow during the flow meter test can be caused by a vehicle warm EVAP system cooling down.
- A decrease in flow during the flow meter test can be caused by a vehicle cool EVAP system warming up.

The Solution

When working on a vehicle with significant differences in temperature between the vehicle EVAP system and the nitrogen gas, allow the vehicle EVAP system temperature to stabilise as close as possible to the temperature of the nitrogen gas before conducting the Flow Meter Test.

&#169© Copyright Chevrolet. All rights reserved

Electronic Ignition System Diagnosis

Diagnostic Instructions

- Perform the Diagnostic System Check - Vehicle prior to using this diagnostic procedure.
- Review Strategy Based Diagnosis for an overview of the diagnostic approach.
- Diagnostic Procedure Instructions provides an overview of each diagnostic category.

Circuit/System Description

Ignition voltage is supplied to the ignition coil. The engine control module (ECM) provides an ground for the ignition coil control circuits. When the ECM removes the ground path of the ignition primary coil, the magnetic field produced by the coil collapses. The collapsing magnetic field produces a voltage in the secondary coil which ignites the spark plugs. The sequencing and timing are controlled by the ECM.

Diagnostic Aids

If the condition is intermittent, moving the related harnesses and connectors, with the engine running, while monitoring the appropriate scan tool Misfire Current Cylinder parameter and the appropriate Ignition Coil Control Circuit Status parameter this may help to isolate the condition.

Reference Information

Schematic Reference

Engine Controls Schematics

Connector End View Reference

Component Connector End Views

Description and Operation

- Electronic Ignition System Description
- Hybrid Modes of Operation Description

Electrical Information Reference

- Circuit Testing
- Connector Repairs
- Testing for Intermittent Conditions and Poor Connections
- Wiring Repairs

Scan Tool Reference

Control Module References for scan tool information

Circuit/System Testing

1. Vehicle OFF, disconnect the harness connector at the K35 ignition coil module.
2. Test for less than 5 Ω between the ground circuit terminal B and ground.
   If greater than the specified range, repair the ground circuit for an open/high resistance.
3. Vehicle OFF, all systems OFF. It may take up to 2 minutes for all the systems to power down. Test for less than 5 Ω between the low reference circuit terminal C and ground.
   If greater than the specified range, test the low reference circuit for an open/high resistance. If the circuit tests normal, replace the K20 ECM.
4. Vehicle in Service Mode, verify that a test lamp illuminates between the ignition voltage circuit terminal A and ground.
   If the test lamp does not illuminate, test the ignition voltage circuit for a short to ground or an open/high resistance. If the circuit tests normal and the ignition voltage circuit fuse is open, test all components connected to the ignition voltage circuit and replace as necessary.
5. If all circuits test normal, test or replace the K35 ignition coil module.

Repair Instructions

Perform the Diagnostic Repair Verification after completing the diagnostic procedure.

- Ignition Coil Replacement
- Control Module References for replacement, setup, and programming

&#169© Copyright Chevrolet. All rights reserved

Inspection/Maintenance System Check

Diagnostic Instructions

- Perform the Diagnostic System Check - Vehicle prior to using this diagnostic procedure.
- Review Strategy Based Diagnosis for an overview of the diagnostic approach.
- Diagnostic Procedure Instructions provides an overview of each diagnostic category.

Description

Several states require that a vehicle pass on-board diagnostic (OBD) system tests and the inspection/maintenance (I/M) emission inspection in order to renew number plates. This is accomplished by viewing the I/M System Status display on a scan tool. Using a scan tool, the technician can observe the I/M System Status in order to verify that the vehicle meets the criteria that complies with the local area requirements. While testing in the I/M System Status mode, some diagnostic trouble codes (DTCs) may occur that are called I/M Test DTCs. An I/M Test DTC is defined as a DTC that is currently commanding the MIL ON, and is stored in non-volatile memory. The intended use of this data is to prevent vehicles from passing I/M inspection without proper repair to the vehicle. These DTCs are not erasable from any scan tool command or erasable by disconnecting power to the controller. The I/M Test DTCs will be supported by all emissions related control modules. For example, Engine Control Modules (ECMs), Transmission Control Modules (TCMs), and Fuel Pump Control Modules (FPCMs). An I/M Test DTC will not be stored or erased from the control module except at the end of trip processing which occurs 5 s after vehicle OFF.

Conditions for Updating the I/M System Status

Each system requires at least one, and sometimes several, diagnostic tests. The results of these tests are reported by a DTC. A system monitor is complete when either all of the DTCs comprising the monitor have Run and Passed, or any one of the DTCs comprising the monitor have illuminated the malfunction indicator lamp (MIL). Once all of the tests are completed, the I/M System Status display will indicate YES in the Completed column.

For example, when the HO2S Heater Status indicates YES, either all of the oxygen sensor heater tests have passed or one of the tests has illuminated the MIL. If the vehicle has four heated oxygen sensors, either all four heater circuit tests have passed or one of the heater circuit tests has illuminated the MIL. The I/M System Status will indicate NO under the Completed column when any of the required tests for that system have not run. The following is a list of conditions that would set the I/M System Status indicator to NO:

- The vehicle is new from the factory and has not yet been driven through the necessary drive conditions to complete the tests.
- The 12 V battery has been disconnected or discharged below operating voltage.
- The control module power or ground has been interrupted.
- The control module has been reprogrammed.

- The control module DTCs have been cleared as part of a service procedure.

Conditions for Clearing I/M Test DTCs

1. Only the OBD II System can erase the I/M Test DTC. The OBD II system must determine that the malfunction that caused the I/M Test DTC to be stored is no longer present and is not commanding the MIL. Each of the following represents ways to clear an I/M Test DTC:
   - If the MIL goes out due to 3 passing drive cycles and the scan tool code clear is not used, the I/M Test DTC is erased at power down of the last drive cycle.
   - If a scan tool code clear is used to turn OFF the MIL, the I/M Test DTC is not erased, the DTC must PASS and not FAIL. The I/M Test DTC is erased at power down of the drive cycle.
   - If the controller is reflashed/reprogrammed, all I/M Test DTCs are erased.
2. For the OBD II System to run a single drive cycle for clearing an I/M Test DTC, all of the following conditions must occur:
   - Vehicle ON, engine run time is greater than 600 s.
   - Cumulative vehicle speed is greater than 41 km/h (25 mph) for greater than 300 s.
   - Continuous engine running, and vehicle speed is 0 km/h (0 mph) for greater than 30 s.
   - Vehicle OFF for 5 s.

Monitored Emission Control Systems

The OBD II system monitors all emission control systems that are on-board. Not all vehicles need every possible emission control system. For example, a vehicle may not be equipped with secondary air injection (AIR) or exhaust gas recirculation (EGR). The OBD II regulations require monitoring of the following; if equipped:

- The air conditioning system
- The catalytic converter efficiency
- Comprehensive component monitoring--Emission related inputs and outputs
- The evaporative emission (EVAP) system
- The fuel delivery system
- Heated catalyst monitoring
- Misfire monitoring
- The oxygen sensor system (O2S or HO2S)
- The oxygen sensor heater system (HO2S heater)

For the specific DTCs required for each system, refer to Inspection/Maintenance (I/M) Test DTC Table . Systems such as misfire and comprehensive components may not be listed in a system status list. These tests run continuously and do not require an I/M System Status indicator.

Diagnostic Aids

The I/M System Status display provides an indication of when the control module has completed the required tests. This does not necessarily mean that the test has passed, only that a decision was made. If the diagnostic fails, a DTC will indicate the failure. If a failure indication is present for a DTC associated with one of the I/M regulated

systems, it may prevent other required tests from running. For example, a DTC for the control circuit of the EVAP purge solenoid may not be listed in the Inspection/Maintenance System DTC Table because it is a continuous test. If this DTC is set, the Active Tests for the EVAP system may not run.

The I/M System Status information may be useful for a technician to determine if diagnostics have run when verifying repairs.

Circuit/System Verification

Vehicle in Service Mode, observe the scan tool I/M System Status indicators, and the I/M Test DTCs. All I/M System Status indicators should display YES, and no I/M Test DTCs should be present.

Circuit/System Testing

Note: Many DTC related repairs will instruct the technician to clear the DTC information. Clearing the DTC will reset the I/M System Status indicators to NO. Performing the I/M Complete System Set Procedure will set each of the I/M System Status indicators to YES.

1. Observe the ECM DTC information with a scan tool. Verify no DTCs are present.
   If a DTC is set that would prevent the I/M System Status tests from completing, diagnose that DTC before continuing. Refer to Diagnostic Trouble Code (DTC) List - Vehicle .
2. Review applicable service bulletins for software updates that would prevent the I/M System Status tests from completing.
   If a control module re-program or other repair is required, perform the Inspection/Maintenance Complete System Set Procedure .
3. Observe the scan tool I/M System Status indicators. The I/M System Status indicators should display Yes.
   If any I/M System Status indicators display NO, perform the Inspection/Maintenance Complete System Set Procedure .
4. Observe the I/M Test DTC and I/M System Status information with a scan tool. There should be no I/M Test DTCs, and there should be no I/M System Status indicators displaying NO.
   If an I/M Test DTC is set and all of the I/M System Status indicators are Yes, there is no need to perform the Complete System Set Procedure. Diagnose the DTC using the Diagnostic Trouble Code (DTC) List - Vehicle and refer to Conditions for Clearing the I/M Test DTCs.
   If an I/M Test DTC is set and the I/M System Status indicators are NO, diagnosis the DTC and perform the Inspection/Maintenance Complete System Set Procedure .

&#169© Copyright Chevrolet. All rights reserved

Inspection/Maintenance Complete System Set Procedure

Diagnostic Instructions

- Perform the Diagnostic System Check - Vehicle prior to using this diagnostic procedure.
- Review Strategy Based Diagnosis for an overview of the diagnostic approach.
- Diagnostic Procedure Instructions provides an overview of each diagnostic category.

Description

The purpose of the Inspection/Maintenance (I/M) complete system set procedure is to satisfy the enable criteria necessary to execute all of the I/M readiness diagnostics and complete the trips for those particular diagnostics. When all I/M monitored diagnostic tests are completed, the I/M System Monitor Indicators are set to YES. Perform the Inspection/Maintenance (I/M) Complete System Set Procedure if any I/M System Monitor indicators are set to NO.

Conditions for Meeting a Cold Start

- Ignition voltage between 10-32 V.
- Barometric pressure (BARO) between 10-16 psi.
- Engine coolant temperature (ECT) less than 40°C (104°F).
- Inlet air temperature (IAT) between 4-45°C (39-113°F).
- Fuel level between 10 and 90 %.

Circuit/System Verification

Vehicle in Service Mode, observe the scan tool Inspection/Maintenance (I/M) System Monitor and the I/M test DTCs. All I/M System Monitors should display YES, and there should be no I/M Test DTCs.

Inspection/Maintenance (I/M) System Set Procedure

Warning: Refer to Road Test Warning in the Preface section.

1. Vehicle ON, accelerate to a speed greater than 40 km/h (25 MPH) with engine speed greater than 1800 RPM.
2. Maintain the vehicle speed and engine speed until the engine reaches normal operating temperatures.

3. Park vehicle and ensure that the vehicle meets the conditions for a cold start listed above.
4. Allow vehicle to sit undisturbed for a minimum of 8 hours.
5. Vehicle in Service Mode, observe the Inspection/Maintenance (I/M) Monitors with a scan tool. All of the I/M System Monitors should display YES.
   If any of the I/M System Monitors display NO, refer to the Inspection/Maintenance (I/M) Test DTC Table for the monitor which did not display YES. The I/M System DTC Table identifies the DTCs associated with each I/M System Monitor.

   Note: An I/M Test DTC will not be stored or erased from the ECU except at the end of trip processing, which occurs 5 s after Vehicle OFF.

6. Observe the I/M Test DTC information with a scan tool. Verify there are no I/M Test DTCs present.
   If an I/M Test DTC is set, diagnose the DTC using the Diagnostic Trouble Code (DTC) List - Vehicle and refer to Inspection/Maintenance System Check .
7. Observe the ECM DTC information with a scan tool. Verify no DTCs are present.
   If a DTC is set, diagnose using the Diagnostic Trouble Code (DTC) List - Vehicle . After repairs, perform the Inspection/Maintenance Complete System Set Procedure to verify no further DTCs are set.

&#169© Copyright Chevrolet. All rights reserved

Inspection/Maintenance (I/M) Test DTC Table

System	DTCs Required to Set System Status to YES
If an I/M System Status indicator did NOT update to YES during the Inspection/Maintenance Complete System Set Procedure , review each indicator and reference this table to determine each DTC associated with the I/M System Status Indicator. Each DTC listed below has specific conditions that must be met for the diagnostic to run. Included within the conditions are additional DTCs which, if set, may inhibit the DTCs listed below from running. Reviewing and operating the vehicle within the Conditions for Running for each DTC listed below will allow the I/M System Status Indicators to transition to YES.	
Catalyst	DTC P0420
EVAP	• DTC P043E, P043F, or P145F • DTC P0442 or P0455 • DTC P0451-P0453
Fuel	DTC P219A
Oxygen Sensor	• DTC P0131, P0132, P0134, P0137, P0138, or P0140 • DTC P0133, P013A, P013B, P013E, P013F, P1133, P2270, P2271, or P2A00
Oxygen Sensor Heater	DTC P0030, P0036, P0053, P0054, P0135, or P0141
Camshaft Position	DTC P0011 or P0014

&#169© Copyright Chevrolet. All rights reserved

Engine Control Module Replacement

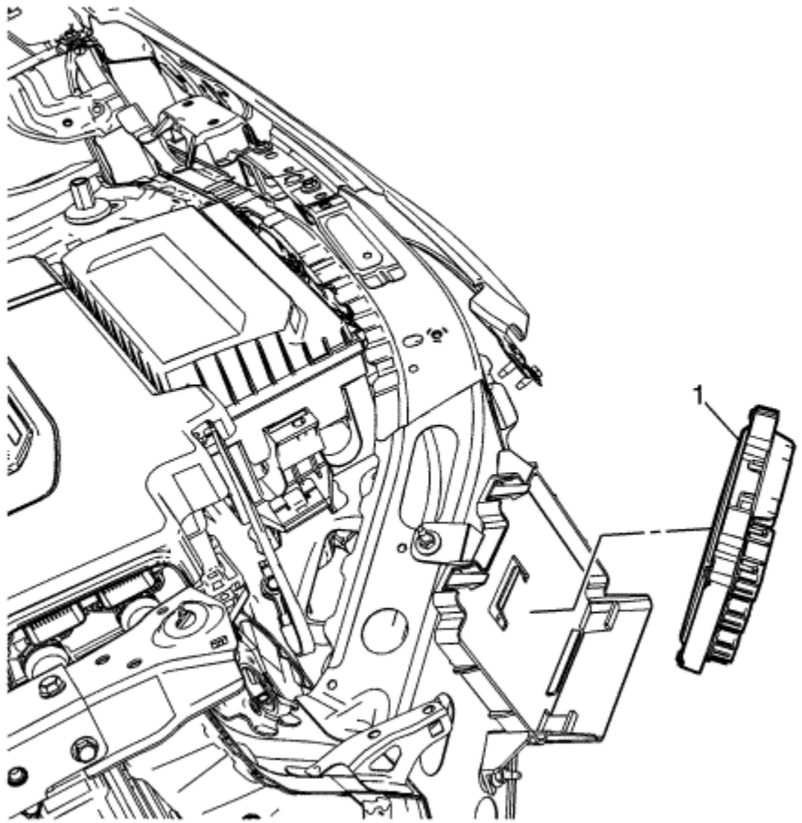

Callout	Component Name
Preliminary Procedure Remove the front bumper fascia. Refer to Front Bumper Fascia Removal and Installation : Volt → Ampera .	
	Engine Control Module

1	**Caution:** • Turn the ignition OFF when installing or removing the control module connectors and disconnecting or reconnecting the power to the control module (battery cable, powertrain control module (PCM)/engine control module (ECM)/transaxle control module (TCM) pigtail, control module fuse, jump leads, etc.) in order to prevent internal control module damage. • Control module damage may result when the metal case contacts battery voltage. DO NOT contact the control module metal case with battery voltage when servicing a control module, using battery booster cables, or when charging the vehicle battery. • In order to prevent any possible electrostatic discharge damage to the control module, do no touch the connector pins or the soldered components on the circuit board. • Remove any debris from around the control module connector surfaces before servicing the control module. Inspect the control module connector gaskets when diagnosing or replacing the control module. Ensure that the gaskets are installed correctly. The gaskets prevent contaminant intrusion into the control module. • The replacement control module must be programmed. **Procedure** 1. Record the current Engine Oil Life percentage, and use a scan tool to update the NEW ECM, if replacing. 2. Disconnect the negative battery cable. Refer to Battery Negative Cable Disconnection and Connection . 3. Disconnect the electrical connectors. 4. If replacing ECM, reprogram the ECM. Refer to Control Module References

&#169© Copyright Chevrolet. All rights reserved

Engine Control Module Bracket Replacement

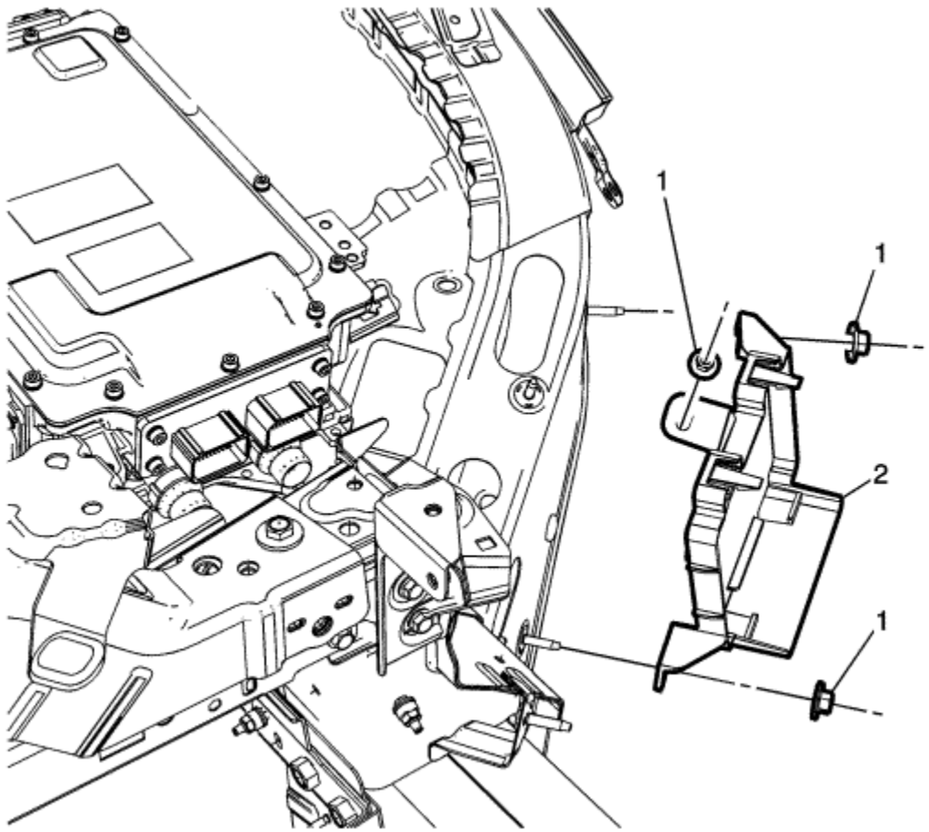

Callout	Component Name
Preliminary Procedure Remove the electronic control module. Refer to Engine Control Module Replacement .	
	Engine Control Module Bracket Fastener (Qty: 3)

1	**Caution:** Refer to Fastener Caution in the Preface section. **Tighten** 9 N·m (80 lb in)
2	Engine Control Module Bracket

© Copyright Chevrolet. All rights reserved

Crankshaft Position System Variation Learn

Note: The Crankshaft Position System Variation Learn procedure is required when the following service procedures have been performed, regardless of whether DTC P0315 is set:

- A crankshaft position sensor replacement
- An engine control module (ECM) replacement
- An engine replacement
- A crankshaft balancer replacement
- A crankshaft replacement
- Any engine repairs which disturb the crankshaft to crankshaft position sensor relationship.

Note: The ECM monitors certain component signals to determine if all the conditions are met to continue with the Crankshaft System Position Variation Learn procedure.

1. Vehicle in Service Mode, observe the DTC information with a scan tool. Verify no other DTCs are set, except DTCs P0300-P0304, or P0315.
   If DTCs are set, except DTCs P0300-P0304, or P0315, refer to Diagnostic Trouble Code (DTC) List - Vehicle for further diagnosis.

   Note: To ensure the battery pack has sufficient state of charge to get Crankshaft Position Variation Learn values with the lowest engine noise present, this procedure should be performed when the Hybrid/EV Battery Pack Charge Remaining parameter is at least 40%.

2. Select the Crankshaft Position Variation Learn procedure with a scan tool and perform the following:
   2.1. Block drive wheels.
   2.2. Set parking brake.
   2.3. DO NOT apply brake pedal.
   2.4. Turn the air conditioning (A/C) OFF.
   2.5. When directed, apply and hold brake pedal for the duration of the procedure.
   2.6. Vehicle ON, engine running at operating temperature.
   2.7. The vehicle must remain in Park or Neutral.

      Note: The ECM controls the engine speed during the Crankshaft Position System Variation Learn procedure.

   2.8. Tap and release the accelerator pedal to start the Crankshaft Position Variation Learn procedure.
3. The scan tool displays Learn In Progress.
4. The scan tool displays Learn Successful.

5. Verify DTC P0315 ran and passed This Ignition Cycle.
   If DTC P0315 failed or did not run This Ignition Cycle, or another DTC is present, refer to Diagnostic Trouble Code (DTC) List - Vehicle for further diagnosis.
6. Once the Crankshaft Position System Variation Learn procedure has successfully completed, and in order to store the crankshaft position system variation values in the ECM, turn OFF the vehicle and verify all vehicle systems are OFF. This may take up to 2 minutes.

&#169© Copyright Chevrolet. All rights reserved

Throttle/Idle Learn

Description

The engine control module (ECM) learns the airflow through the throttle body to ensure the correct engine speed. The learnt airflow values are stored within the ECM. These values are learned to adjust for production variation and will continuously learn during the life of the vehicle to compensate for reduced airflow due to throttle body coking. Anytime the throttle body airflow rate changes, for example due to cleaning or replacement, the values must be re-learned.

An engine that had a heavily coked throttle body that has been cleaned or replaced may take several drive cycles to learn out the coking. To accelerate the process, the scan tool has the ability to reset all learnt values back to zero. A new ECM will also have values set to zero.

The engine speed may be unstable or a DTC may set if the learned values do not match the actual airflow.

Conditions for Running the Throttle Learn Procedure

Reset Procedure

- DTCs P0101, P0102, P0103, P0106, P0107, P0108, P0116, P0117, P0118, P0121, P0122, P0123, P0128, P0171, P0172, P0201, P0202, P0203, P0204, P0222, P0223, P0300, P0351, P0352, P0353, P0354, P0601, P0604, P0606, P060D, P0641, P0651, P0697, P06A3, P1101, P1516, P2101, P2119, P2122, P2123, P2127, P2128, P2135, P2138, or P2176 are not set.
- Vehicle in Service Mode.
- The vehicle speed sensor (VSS) is 0 km/h (0 MPH).

Learn Procedure

- DTCs P0101, P0102, P0103, P0106, P0107, P0108, P0116, P0117, P0118, P0121, P0122, P0123, P0128, P0171, P0172, P0201, P0202, P0203, P0204, P0222, P0223, P0300, P0351, P0352, P0353, P0354, P0601, P0604, P0606, P060D, P0641, P0651, P0697, P06A3, P1101, P1516, P2101, P2119, P2122, P2123, P2127, P2128, P2135, P2138, or P2176 are not set.
- The engine speed is between 1,400-4,000 RPM.
- The manifold absolute pressure (MAP) is greater than 5 kPa.
- The mass air flow (MAF) is greater than 2 g/s.
- The ignition voltage is greater than 10 V.

Throttle Learn

Reset Procedure - Performed after the throttle body is cleaned or replaced

1. Vehicle in Service Mode, perform the Idle Learn Reset with a scan tool.
2. Engine running, monitor the TB Idle Airflow Compensation parameter with a scan tool. The TB Idle Airflow Compensation value should equal 0 %.
3. Clear the DTCs and return to the diagnostic that referred you here.

Learn Procedure - Performed after the ECM is programmed or replaced

Note: Do NOT perform this procedure if DTCs are set. Refer to Diagnostic Trouble Code (DTC) List - Vehicle .

1. Engine running for 3 minutes.
2. Monitor the Engine Speed with a scan tool.
3. The ECM will start to learn the new idle cells and the Engine Speed should start to decrease.
4. Vehicle OFF for 60 s.
5. Engine running for 3 minutes.
6. After the 3 minute run time the engine speed should be normal.
7. Once the engine speed has returned to normal, clear DTCs and return to the diagnostic that referred you here.

&#169© Copyright Chevrolet. All rights reserved

Engine Coolant Temperature Sensor Replacement - Thermostat

The engine coolant temperature sensor is integrated in the engine coolant thermostat housing. Refer to Water Inlet Replacement .

© Copyright Chevrolet. All rights reserved

Engine Coolant Temperature Sensor Replacement - Water Outlet

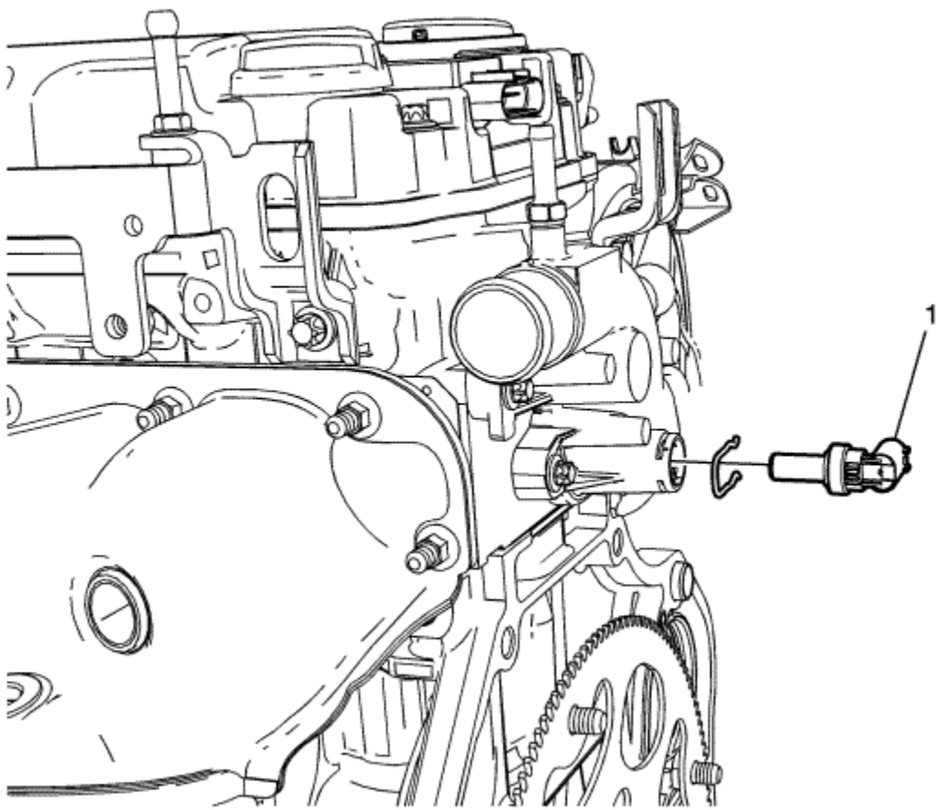

Callout	Component Name
Preliminary Procedure Partially drain the cooling system. Refer to Cooling System Draining and Filling .	
	Engine Coolant Temperature Sensor

1	**Procedure** 1. Remove the retaining clip. 2. Disconnect the electrical connector.

© Copyright Chevrolet. All rights reserved

Mass Airflow Sensor with Inlet Air Temperature Sensor Replacement

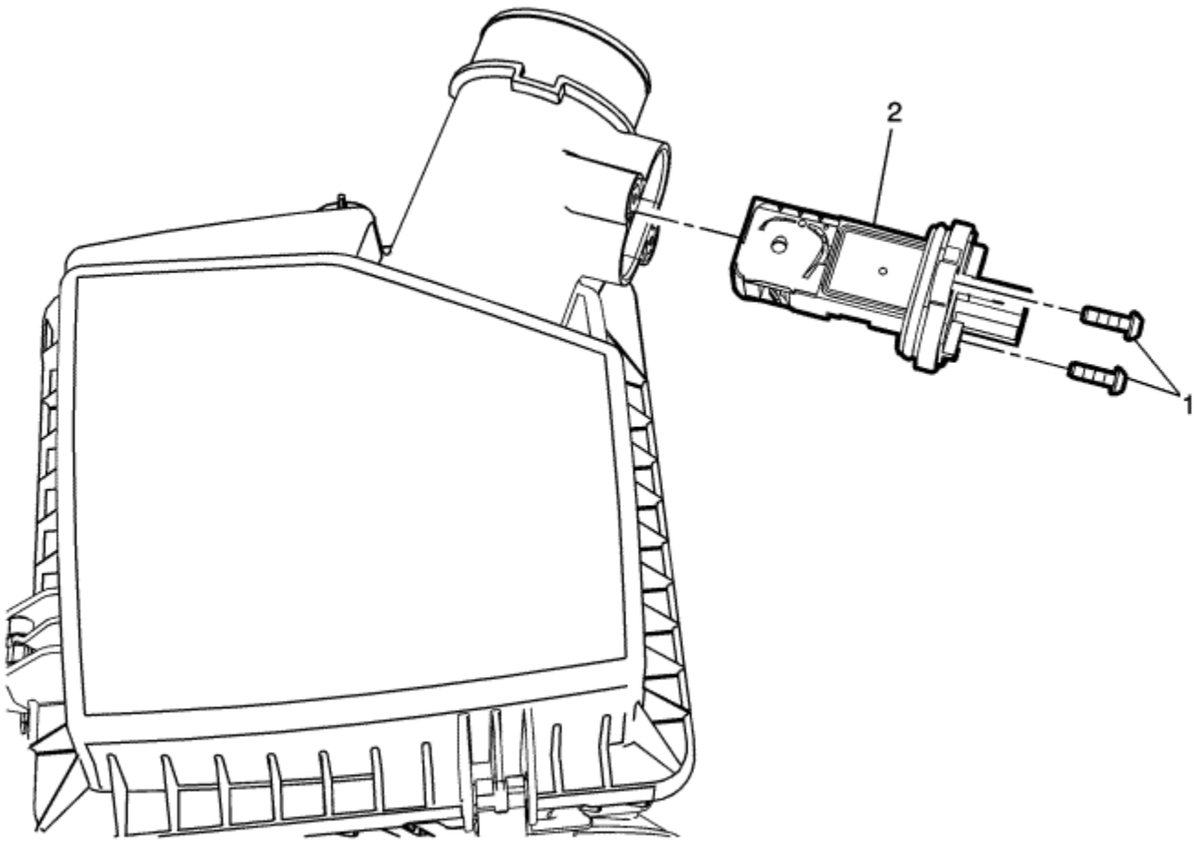

Callout	Component Name
1	Mass Airflow Sensor Fastener (Qty: 2) **Caution:** Refer to Fastener Caution in the Preface section.
	Mass Airflow Sensor with Intake Air Temperature Sensor

2	**Procedure** Disconnect the electrical connector.

© Copyright Chevrolet. All rights reserved

Manifold Absolute Pressure Sensor Replacement

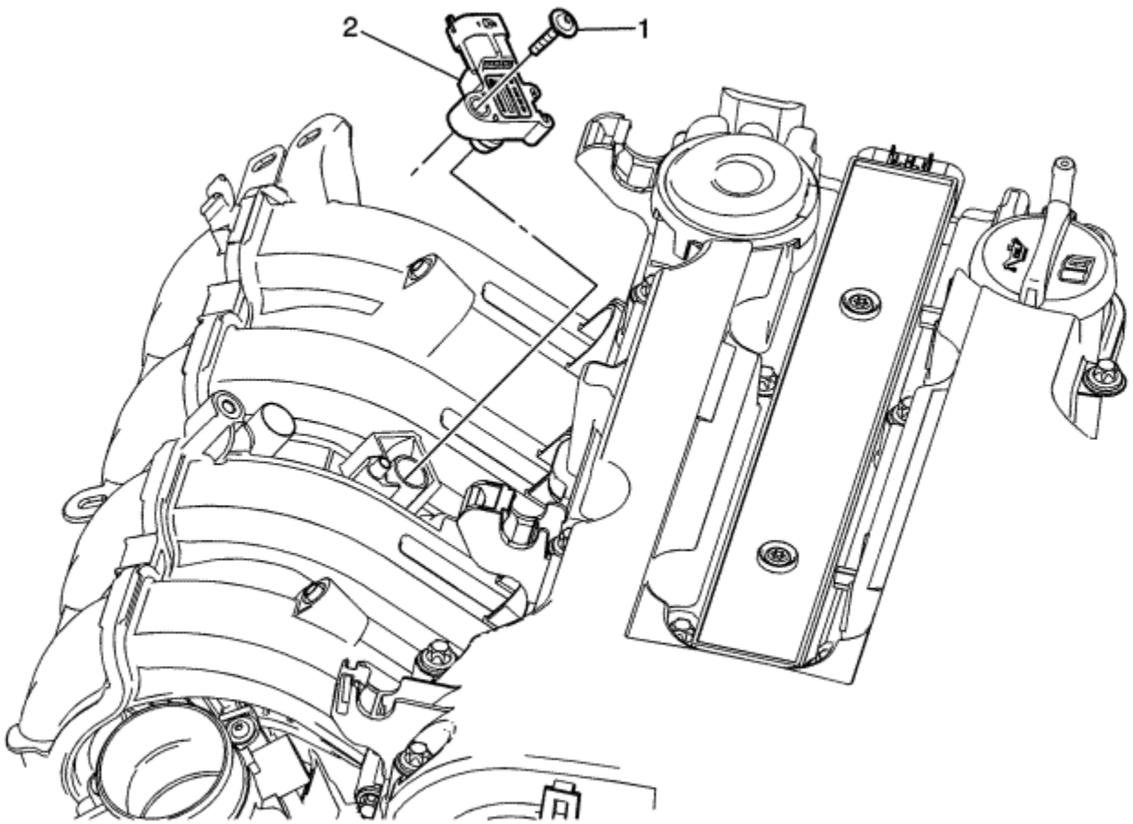

Callout	Component Name
Preliminary Procedure Remove the fuel injection fuel rail. Refer to Fuel Injection Fuel Rail Assembly Replacement .	
	Manifold Absolute Pressure Sensor Fastener

1	**Caution:** Refer to Fastener Caution in the Preface section. **Tighten** 5 N·m(44 lb in)
2	Manifold Absolute Pressure Sensor **Procedure** Disconnect the electrical connector.

© Copyright Chevrolet. All rights reserved

Heated Oxygen Sensor Replacement - Sensor 1

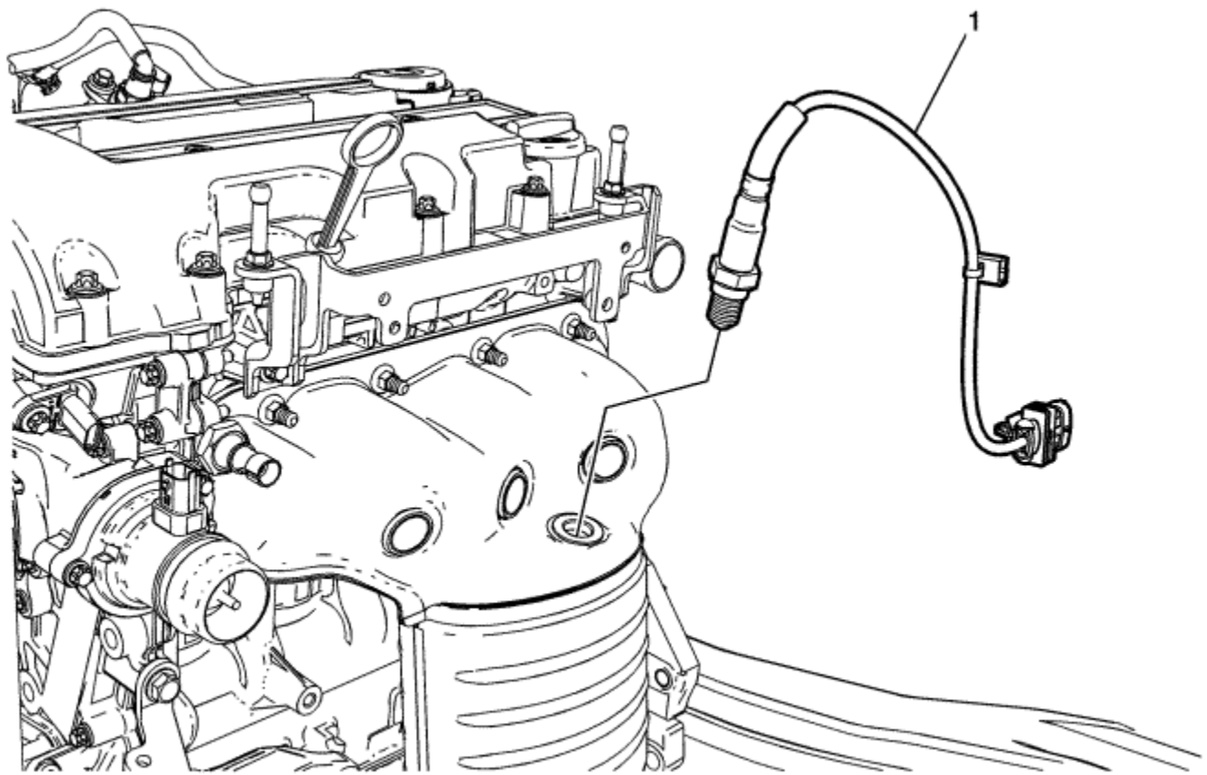

Callout	Component Name
Danger: Always perform the High Voltage Disabling procedure prior to servicing any High Voltage component or connection. Personal Protection Equipment (PPE) and proper procedures must be followed. The High Voltage Disabling procedure will perform the following tasks: Identify how to disable high voltage.	

-
- Identify how to test for the presence of high voltage.
- Identify condition under which high voltage is always present and personal protection equipment (PPE) and proper procedures must be followed.

Failure to follow the procedures exactly as written may result in serious injury or death.

Preliminary Procedure

Disable the high voltage system. Refer to High Voltage Disabling and High Voltage Enabling .

1	Heated Oxygen Sensor **Caution:** Refer to Heated Oxygen and Oxygen Sensor Caution in the Preface section. **Caution:** Refer to Fastener Caution in the Preface section. **Procedure** 1. Disconnect the electrical connector. 2. If reinstalling the old sensor, coat the threads with anti-seize compound. Refer to Adhesives, Fluids, Lubricants, and Sealers . **Tighten** 42 N·m (31 lb ft) **Special Tools** *EN-6129* Remover Installer For equivalent regional tools, refer to Special Tools : Diagnostic Tools .

&#169© Copyright Chevrolet. All rights reserved

Heated Oxygen Sensor Replacement - Sensor 2

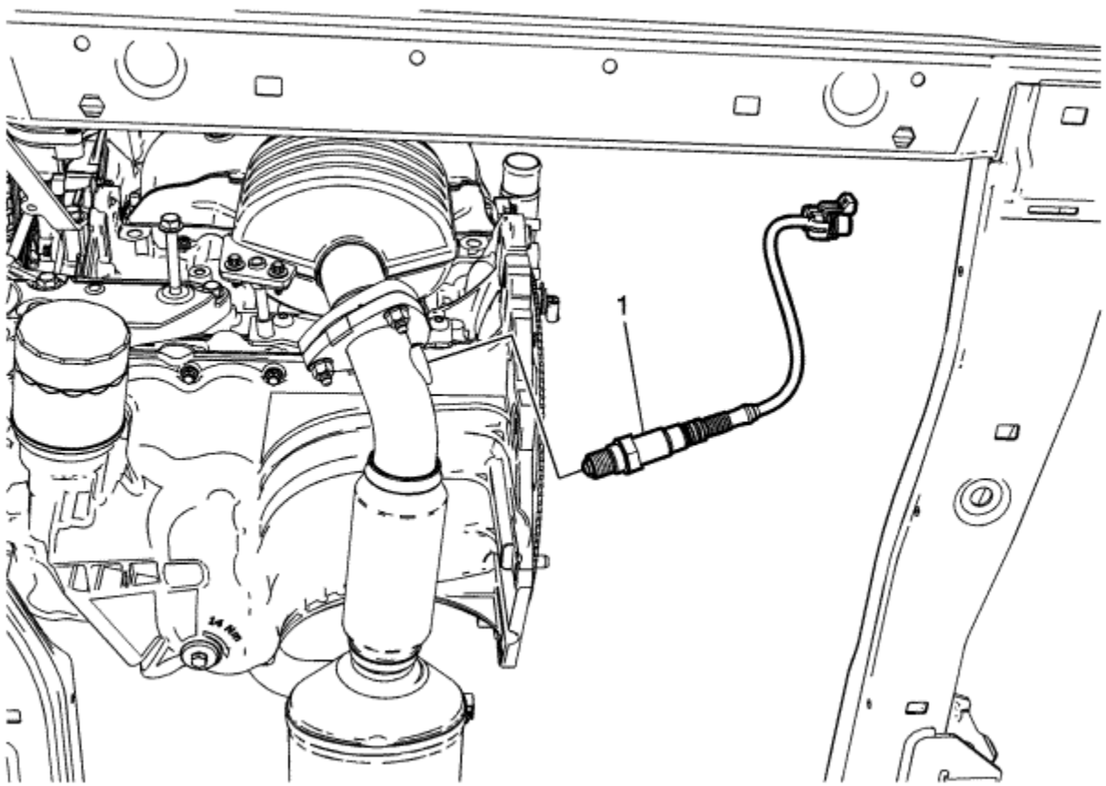

Callout	Component Name

Danger: Do not use a service jack in locations other than those specified to lift this vehicle. Lifting the vehicle with a jack in those other locations could cause the vehicle to slip off the jack and roll; this could cause injury or death.

Preliminary Procedure

Raise and support the vehicle. Refer to Lifting and Jacking the Vehicle .

1	Heated Oxygen Sensor **Caution:** Refer to Heated Oxygen and Oxygen Sensor Caution in the Preface section. **Caution:** Refer to Fastener Caution in the Preface section. **Procedure** 1. Disconnect the electrical connector. 2. If reinstalling the old sensor, coat the threads with anti-seize compound. Refer to Adhesives, Fluids, Lubricants, and Sealers . **Tighten** 42 N·m (31 lb ft) **Special Tools** *EN-6197* Remover Installer For equivalent regional tools, refer to Special Tools : Diagnostic Tools .

© Copyright Chevrolet. All rights reserved

Accelerator Pedal Position Sensor Replacement

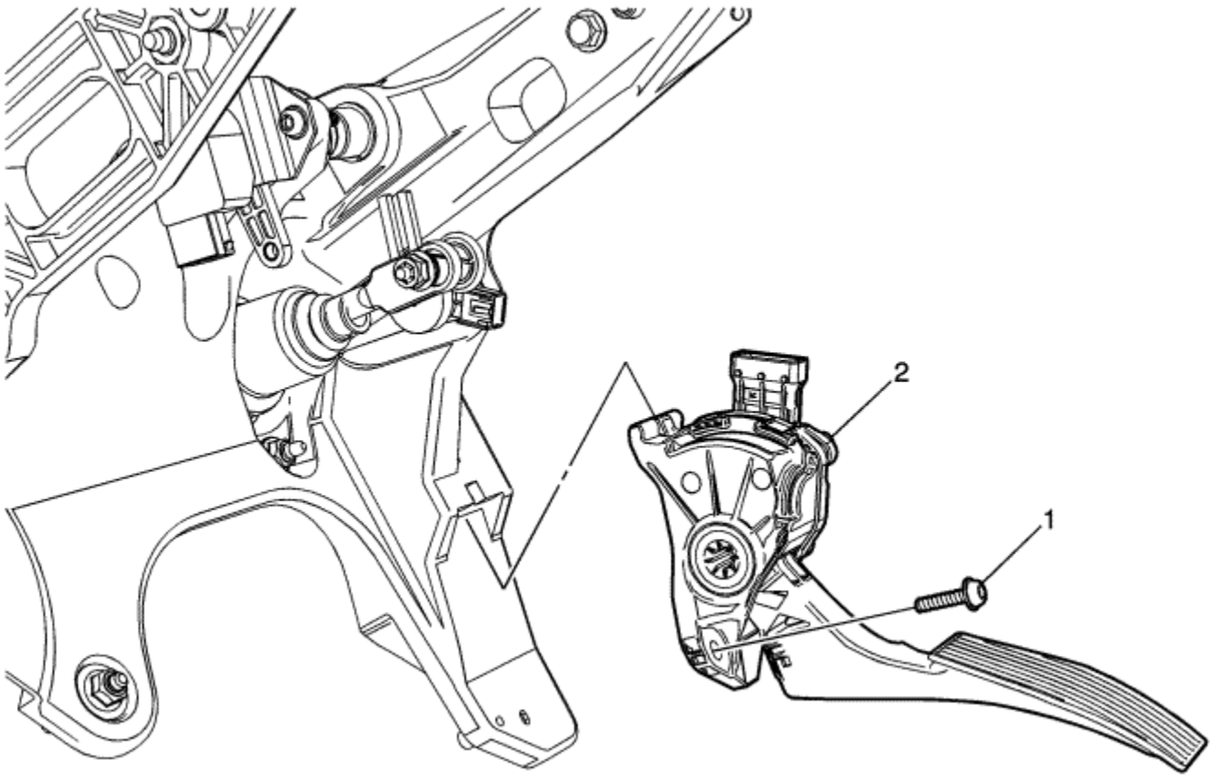

Callout	Component Name
1	Accelerator Pedal Fastener **Caution:** Refer to Fastener Caution in the Preface section. **Tighten** 9 N·m (80 lb in)

2	Accelerator Pedal Position Sensor **Procedure** Disconnect the electrical connector.

© Copyright Chevrolet. All rights reserved

Throttle Body Assembly Replacement

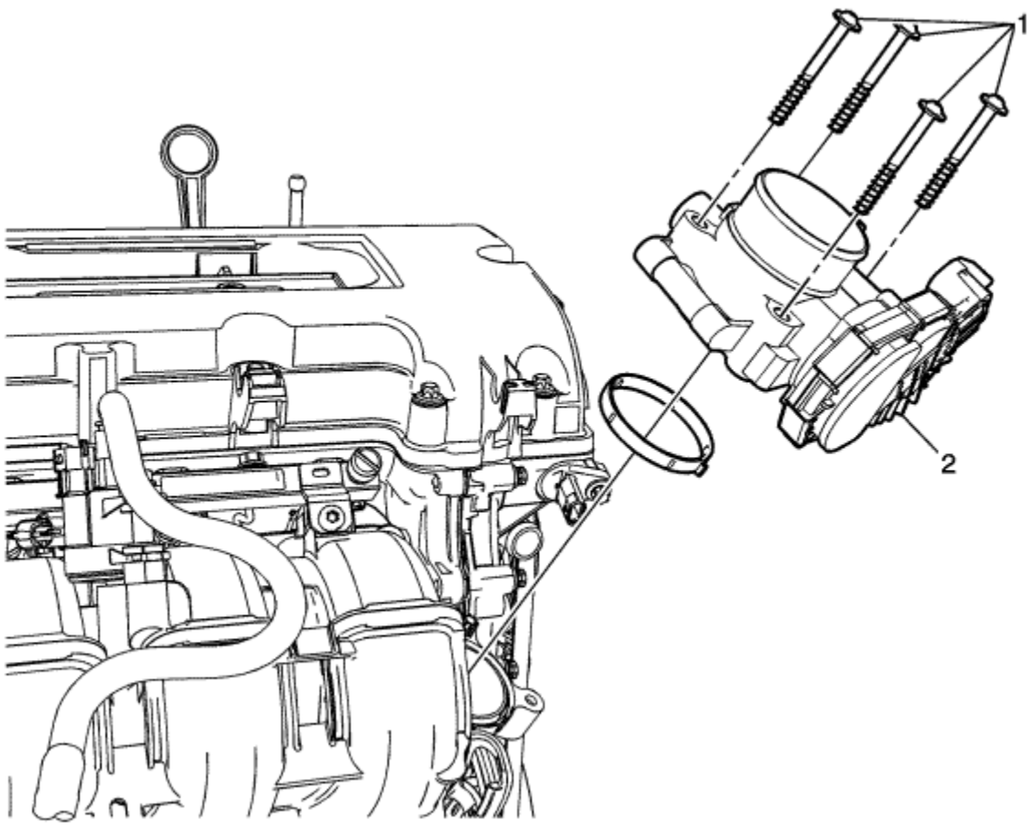

Callout	Component Name
	Preliminary Procedure **Remove the air cleaner outlet duct. Refer to Air Cleaner Outlet Duct Replacement .**
	Throttle Body Assembly Fastener (Qty: 4)

1	**Caution:** Refer to Fastener Caution in the Preface section. **Tighten** 8 N·m (71 lb in)
2	Throttle Body Assembly **Procedure** 1. Use a NEW seal. 2. Disconnect the electrical connector. 3. Perform the throttle learn procedure. Refer to Control Module References .

© Copyright Chevrolet. All rights reserved

Throttle Body Inspection and Cleaning

Note: Over extended time and mileage, deposits may accumulate on the back of the throttle valve plate. The source of the deposit is exhaust gas. Typically these deposits pose no problem. Occasionally the deposit may accumulate to a point where perceived pedal effort or throttle valve movement is effected. This procedure should not be performed on vehicles with mileage under 80,450 km (50,000 mi).

1. Remove the air cleaner outlet duct. Refer to Air Cleaner Outlet Duct Replacement .

   Warning: Turn OFF the ignition before inserting fingers into the throttle bore. Unexpected movement of the throttle blade could cause personal injury.

   Caution: Do not insert any tools into the throttle body bore in order to avoid damage to the throttle valve plate.

2. Inspect the throttle body bore and the throttle valve plate for deposits. You will need to open the throttle valve in order to inspect all surfaces.

   Caution: Do not use any solvent that contains Methyl Ethyl Ketone (MEK). This solvent may damage fuel system components.

3. Clean the throttle body bore and the throttle valve plate using a clean shop towel with an appropriate cleaner.
4. Install the air cleaner outlet duct. Refer to Air Cleaner Outlet Duct Replacement .

© Copyright Chevrolet. All rights reserved

Fuel Pressure Gauge Installation and Removal

Special Tools

EN-34730-91 Pressure Tester

For equivalent regional tools, refer to Special Tools : Diagnostic Tools .

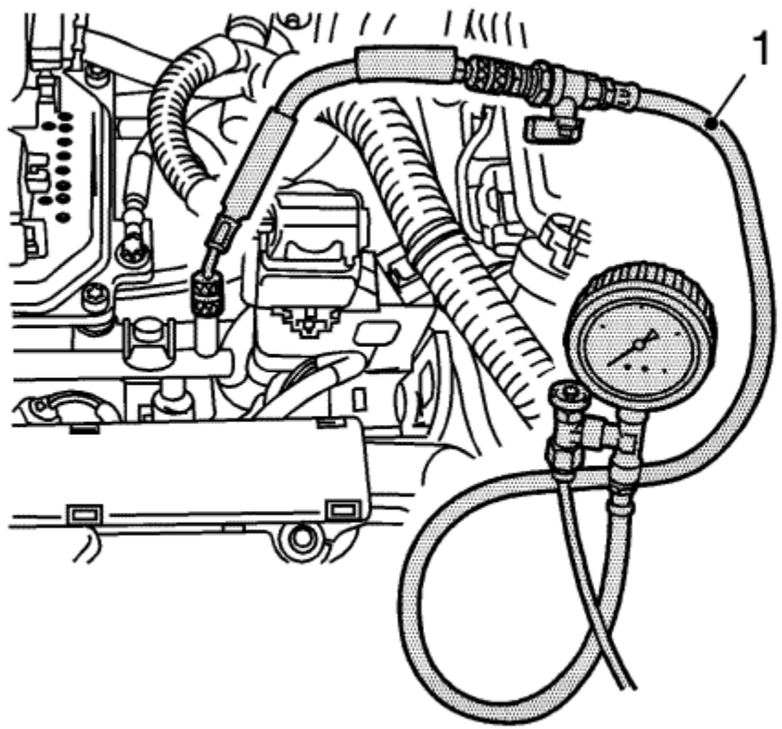

Warning: Petrol or petrol vapours are highly flammable. A fire could occur if an ignition source is present. Never drain or store petrol or diesel fuel in an open container,

due to the possibility of fire or explosion. Have a dry chemical (Class B) fire extinguisher nearby.

Warning: Remove the fuel tank cap and relieve the fuel system pressure before servicing the fuel system in order to reduce the risk of personal injury. After you relieve the fuel system pressure, a small amount of fuel may be released when servicing the fuel lines, the fuel injection pump, or the connections. In order to reduce the risk of personal injury, cover the fuel system components with a shop towel before disconnection. This will catch any fuel that may leak out. Place the towel in an approved container when the disconnection is complete.

1. Remove the resonator outlet duct. Refer to Air Cleaner Resonator Outlet Duct Replacement .
2. Remove the protective cap from the test connection.
3. Attach the *EN-34730-91* tester (1) to the test connection.
4. Install the resonator outlet duct. Refer to Air Cleaner Resonator Outlet Duct Replacement .
5. Start the engine.
   - Bleed the pressure tester at idling speed.
   - Collect the exiting fuel in a suitable container.
   - Read the fuel pressure from the pressure gauge.

   Caution: Clean all of the following areas before performing any disconnections in order to avoid possible contamination in the system:
   - The fuel pipe connections
   - The hose connections
   - The areas surrounding the connections

6. Remove the resonator outlet duct. Refer to Air Cleaner Resonator Outlet Duct Replacement .
7. Detach the pressure gauge *EN-34730-91* tester from the test connection.
8. Install the resonator outlet duct. Refer to Air Cleaner Resonator Outlet Duct Replacement .

&#169© Copyright Chevrolet. All rights reserved

Fuel Tank Draining

Special Tools

CH 45004 Fuel Tank Drain Hose

For equivalent regional tools, refer to Special Tools : Diagnostic Tools

Warning: Refer to Petrol/Petrol Vapours Warning in the Preface section.

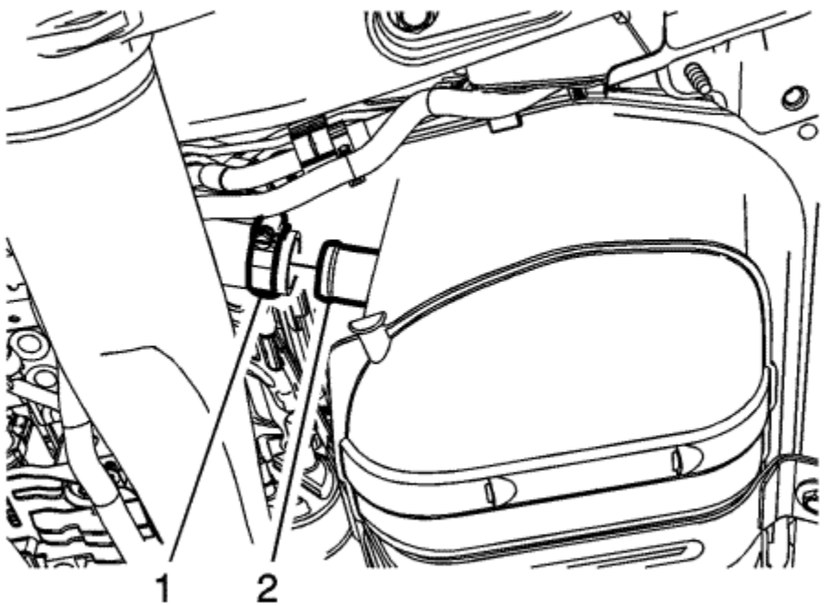

1. Remove the fuel fill cap.

   Danger: Do not use a service jack in locations other than those specified to lift this vehicle. Lifting the vehicle with a jack in those other locations could cause the vehicle to slip off the jack and roll; this could cause injury or death.

2. Raise and suitably support the vehicle. Refer to Lifting and Jacking the Vehicle .
3. Loosen the fuel fill pipe hose clamp (1) at the fuel tank.
4. Separate the fuel fill pipe hose from the fuel tank (2).
5. Using the *CH 45004* hose drain as much fuel from the tank as possible.

© Copyright Chevrolet. All rights reserved

Fuel Tank Replacement

Special Tools

- *CH-807* Closure Plug
- *EN-6015* Closure Plug

For equivalent regional tools, refer to Special Tools : Diagnostic Tools .

Removal Procedure

Danger: To avoid any vehicle damage, serious personal injury or death when major components are removed from the vehicle and the vehicle is supported by a hoist, support the vehicle with jack stands at the opposite end from which the components are being removed and strap the vehicle to the hoist.

Warning: Refer to Petrol/Petrol Vapours Warning in the Preface section.

Warning: Refer to Safety Glasses Warning in the Preface section.

1. Drain the fuel tank. Refer to Fuel Tank Draining .
2. Remove the rear axle. Refer to Rear Axle Replacement .

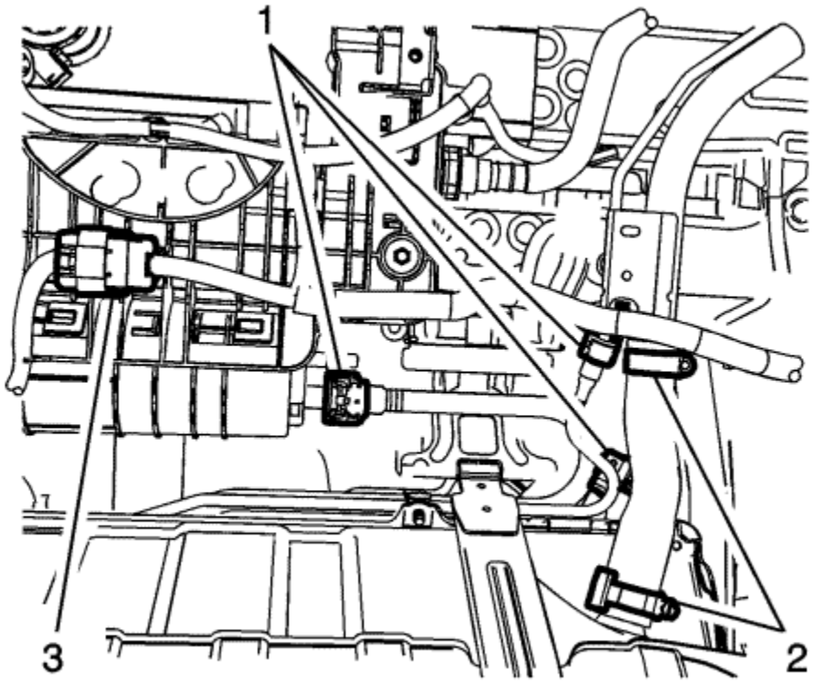

3. Disconnect the evaporative emission and fuel pipe connectors (1). Refer to Plastic Collar Quick Connect Fitting Service .
4. Close the fuel tank vent pipe and the evaporative emission hose with the *CH-807* plugs .
5. Close the fuel feed pipe and the fuel pump feed hose with the *EN-6015* plugs .
6. Loosen the hose clamps (2) and slide the filler tube away from the fuel tank.
7. Disconnect the fuel tank harness electrical connector (3).

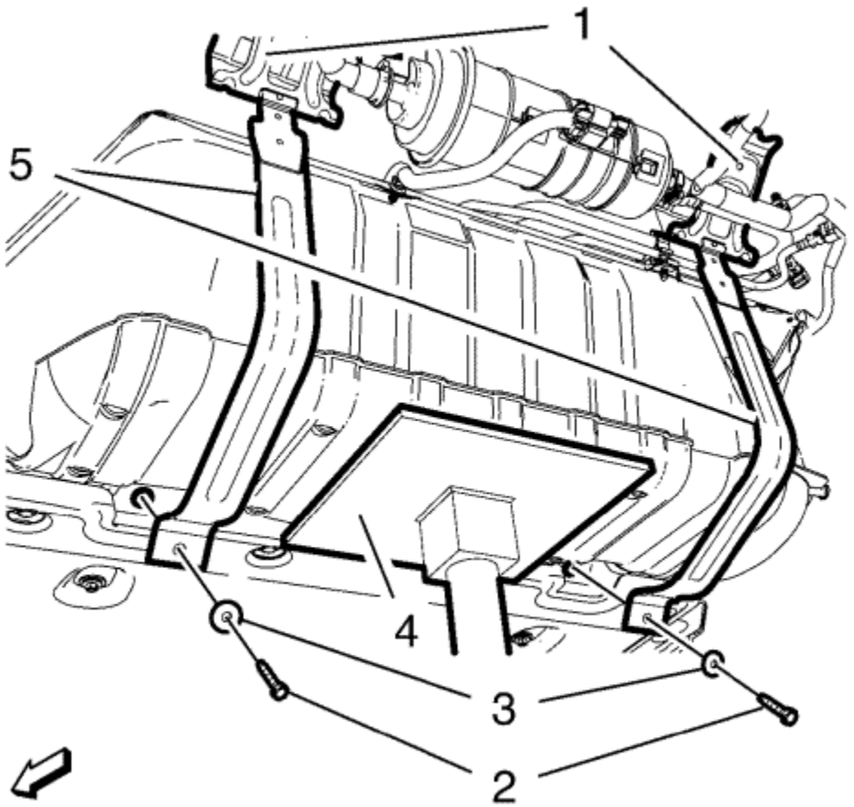

Warning: To help avoid personal injury, always use jack stands when you are working on or under any vehicle that is supported only by a jack.

Caution: When you are jacking or lifting a vehicle at the frame side rails or other prescribed lift points, be certain that the lift pads do not contact the catalytic converter, the brake pipes or the fuel lines. If such contact occurs, vehicle damage or unsatisfactory vehicle performance may result.

8. Support the fuel tank with a suitable adjustable jack (4) as shown in the graphic.
9. Remove the 2 fuel tank strap bolts (2) and the 2 fuel tank strap washers (3).
10. Remove the 2 fuel tank straps (5) from the 2 fuel tank strap rear brackets (1).

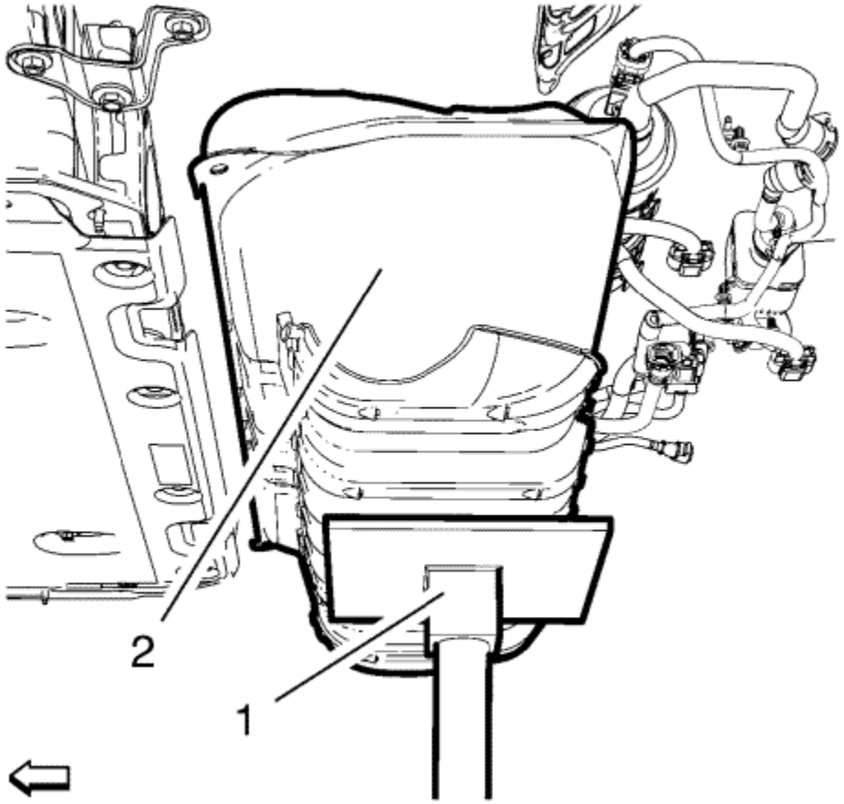

Note: A second technician is required.

11. Move the fuel tank (2) rearwards and lower the fuel tank slowly using the suitable adjustable jack (1).

Disassemble Procedure

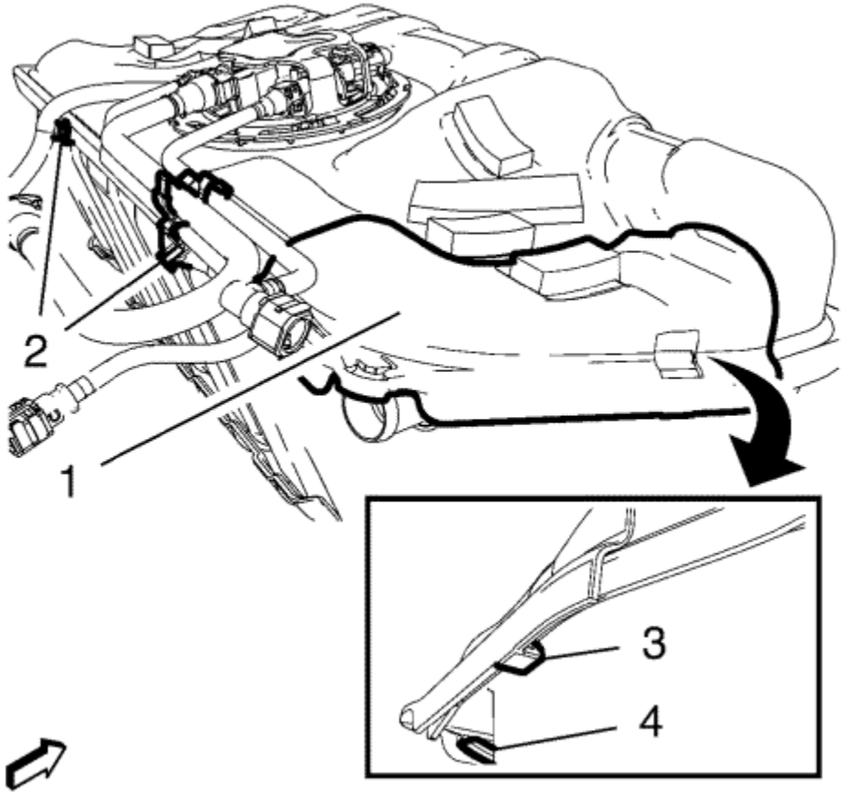

1. Unclip the 2 wiring harness clips (2) from the fuel tank.
2. Unclip the 2 fuel tank upper shield clips (3) and (4) and remove the fuel tank upper shield (1) from the fuel tank.
3. Remove the fuel tank fuel pump module. Refer to Fuel Tank Fuel Pump Module Replacement .

Assemble Procedure

1. Install the fuel tank fuel pump module. Refer to Fuel Tank Fuel Pump Module Replacement .

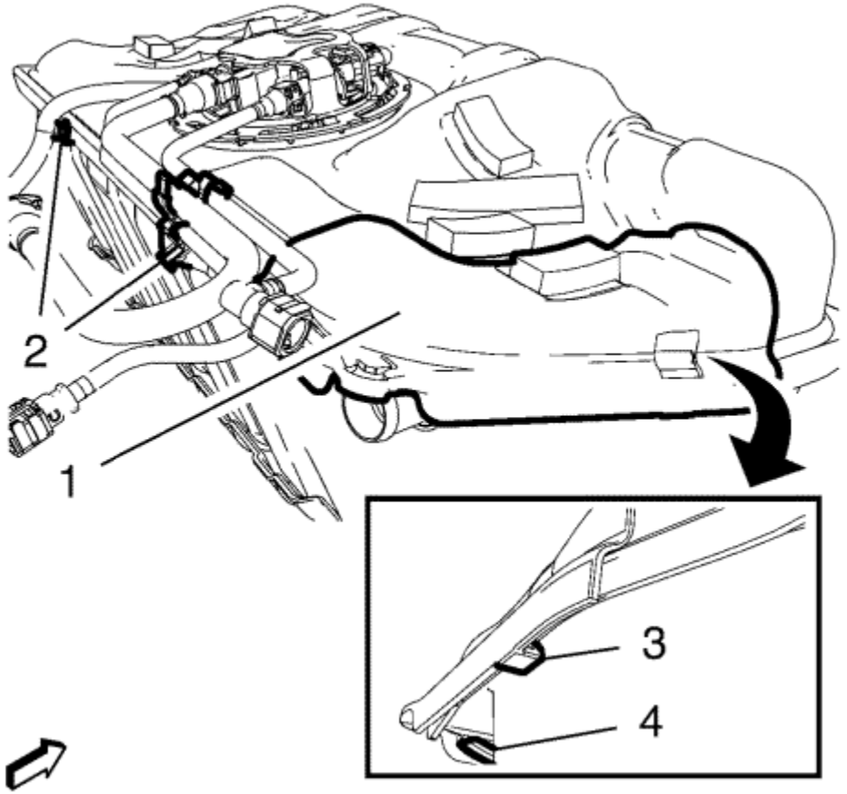

2. Install the fuel tank upper shield (1) to the fuel tank and attach the 2 fuel tank upper shield clips (3, 4).
3. Clip the 2 wiring harness clips (2) to the fuel tank.

Installation Procedure

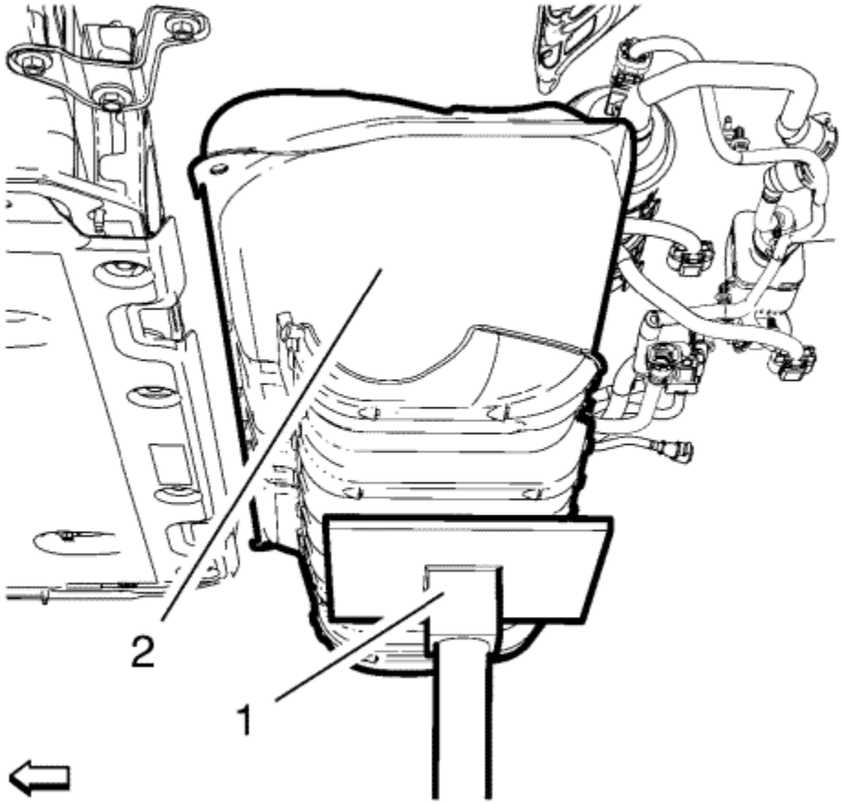

Note: A second technician is required.

1. Raise the fuel tank slowly using a suitable adjustable jack (1) and move the fuel tank (2) forwards.

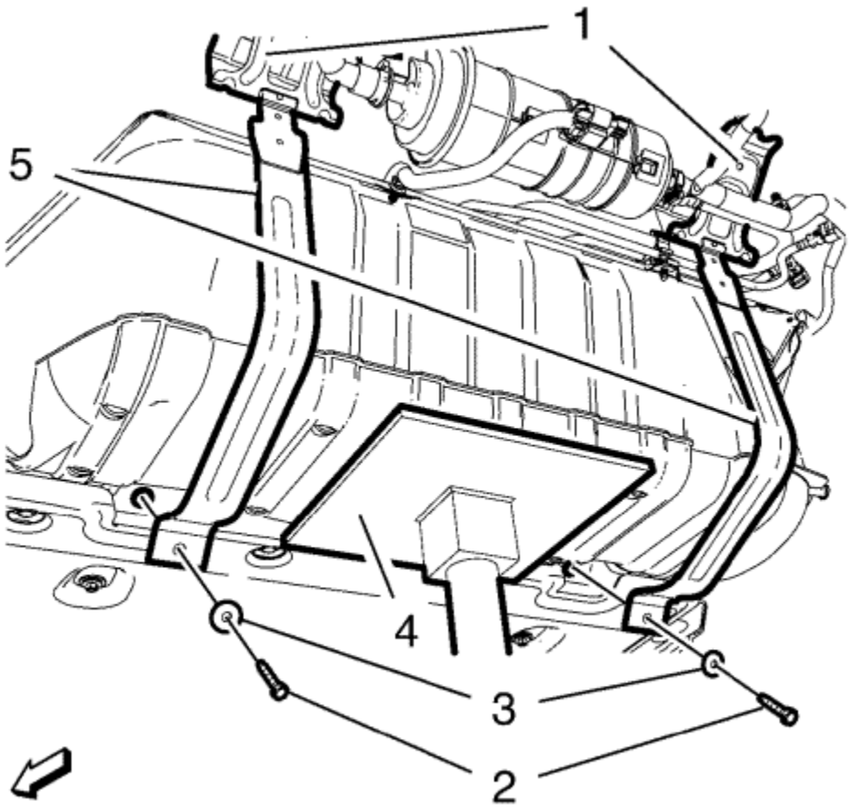

2. Install the 2 fuel tank straps (5) to the 2 fuel tank strap rear brackets (1).

   Caution: Refer to Fastener Caution in the Preface section.

3. Install the 2 fuel tank strap bolts (2) with the 2 fuel tank strap washers (1) and tighten to **20 N·m (15 lb ft)**.
4. Remove the suitable adjustable jack (4) from the fuel tank.

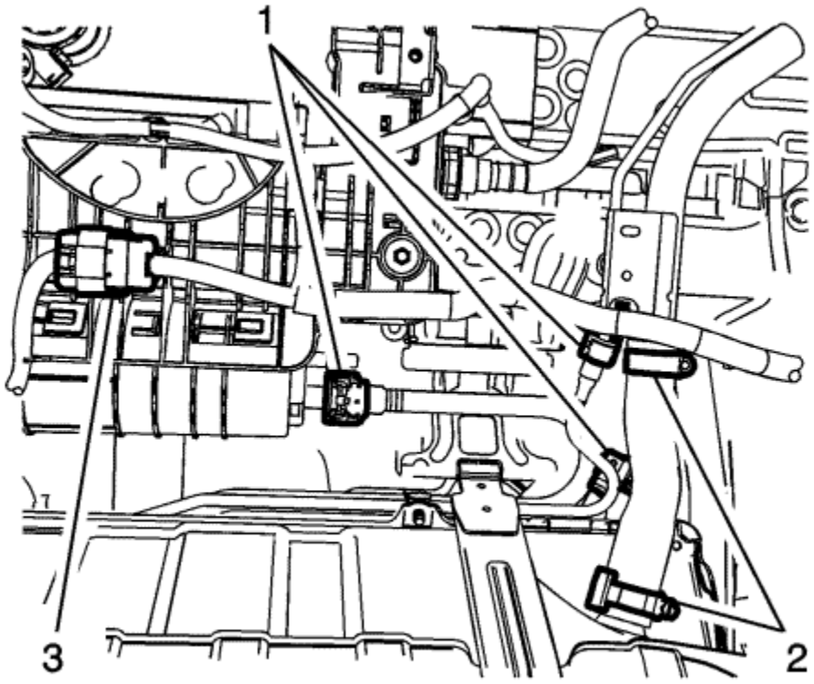

5. Connect the fuel tank harness electrical connector (3).
6. Remove the *CH-807* plugs from the fuel tank vent pipe and the evaporative emission hose.
7. Remove the *EN-6015* plugs from the fuel feed pipe and the fuel pump feed hose.
8. Slide the filler hose onto the tank and tighten the hose clamps (2) to **4 N·m (35 lb in)**.
9. Connect the evaporative emission and fuel pipe connectors (1). Refer to Plastic Collar Quick Connect Fitting Service .
10. Install the rear axle. Refer to Rear Axle Replacement .
11. Refill the fuel tank.

&#169© Copyright Chevrolet. All rights reserved

Fuel Pressure Sensor Replacement - Fuel Feed Pipe

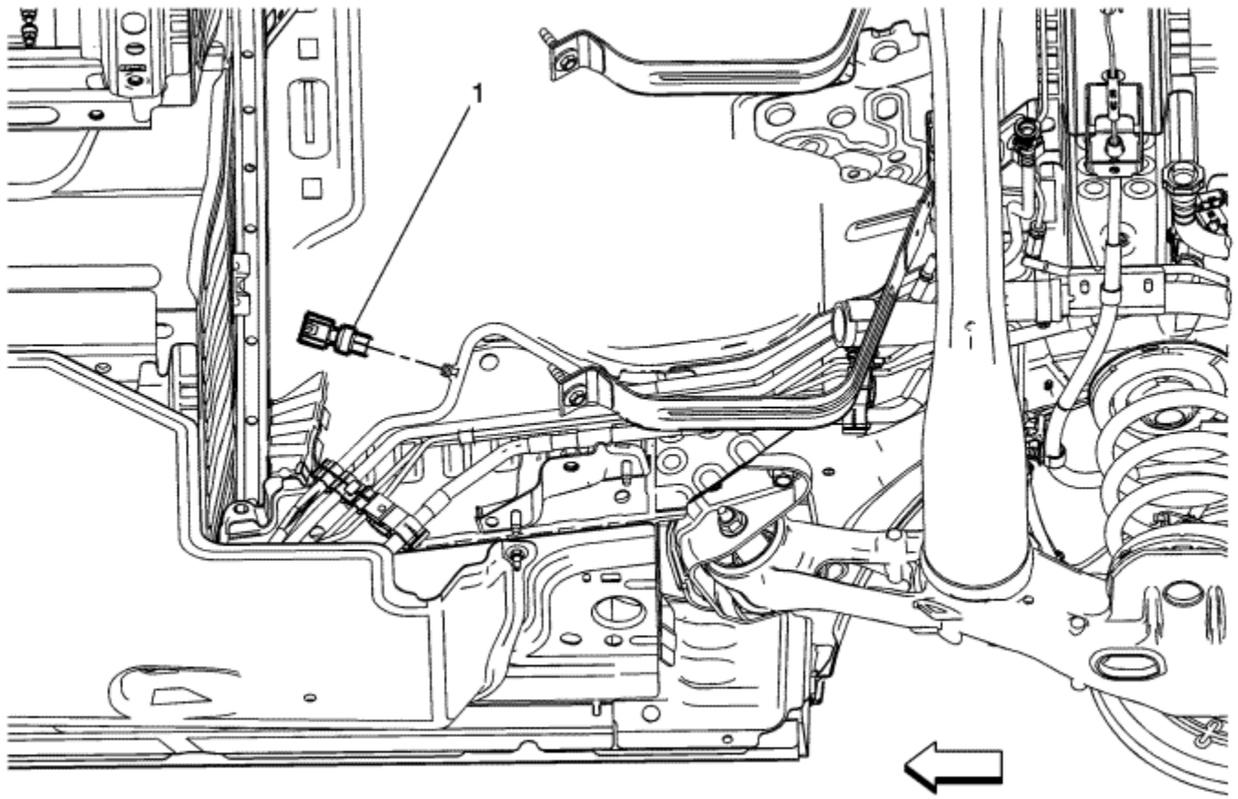

Callout	Component Name
Preliminary Procedure	

1. Remove the drive motor battery. Refer to Drive Motor Battery Replacement and Shipping Preparation .
2. Relive the fuel system pressure.
3. Disconnect the fuel pressure sensor electrical connector.

4. Place a drain pan underneath the vehicle.

1	Fuel Pressure Sensor **Caution:** Refer to Fastener Caution in the Preface section. **Tighten** 19 N·m(14 lb ft)

© Copyright Chevrolet. All rights reserved

Fuel Tank Filler Pipe Replacement

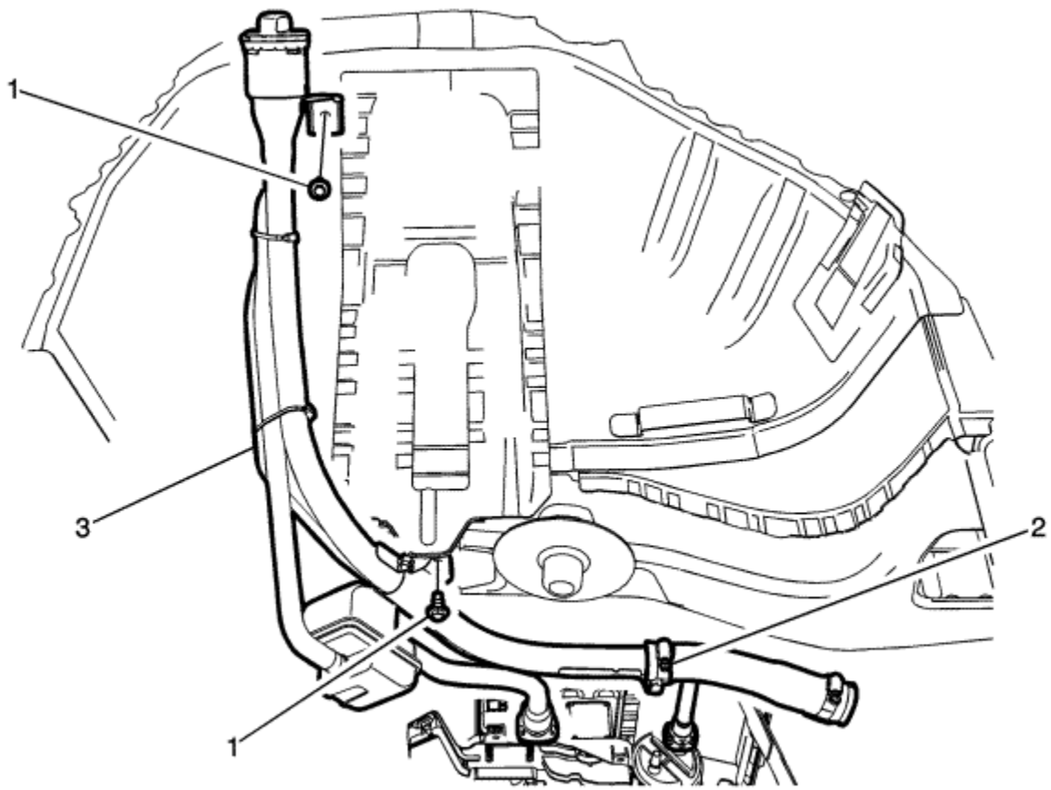

Callout	Component Name
Warning: Petrol or petrol vapours are highly flammable. A fire could occur if an ignition source is present. Never drain or store petrol or diesel fuel in an open container, due to the possibility of fire or explosion. Have a dry chemical (Class B) fire extinguisher nearby. **Preliminary Procedure**	

1. Remove the filler cap.
2. Remove the right rear wheelhouse liner. Refer to Rear Wheelhouse Panel Liner Replacement .
3. Disconnect the evaporative emission canister quick connect pipes. Refer to Plastic Collar Quick Connect Fitting Service

1	Fuel Tank Filler Pipe Fastener (Qty: 2) **Caution:** Refer to Fastener Caution in the Preface section. **Tighten** 9 N·m (80 lb in)
2	Fuel Tank Filler Pipe Hose Clamp **Tighten** 4 N·m(35 lb in)
3	Fuel Tank Filler Pipe

© Copyright Chevrolet. All rights reserved

Fuel Feed Pipe Replacement — Chassis

Removal Procedure

1. Remove the engine compartment fuel feed pipe. Refer to Fuel Feed Pipe Replacement : Chassis → Engine Compartment .
2. Remove the drivetrain and front suspension frame. Refer to Drivetrain and Front Suspension Frame Replacement .
3. Remove the fuel tank. Refer to Fuel Tank Replacement .

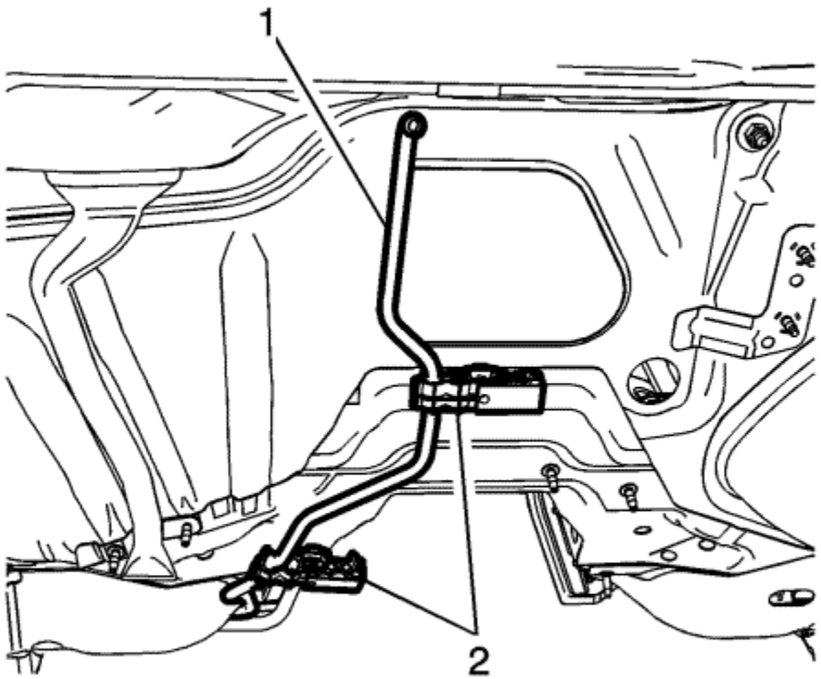

4. Remove the fuel feed pipe (1) from the plastic clips (2).

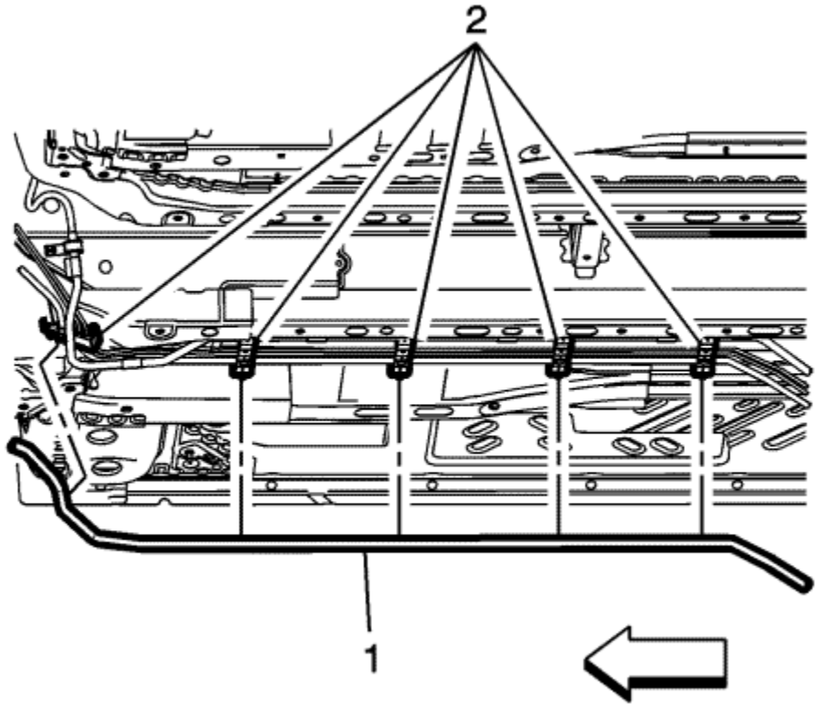

5. Remove the fuel feed pipe (1) from the plastic clips (2).

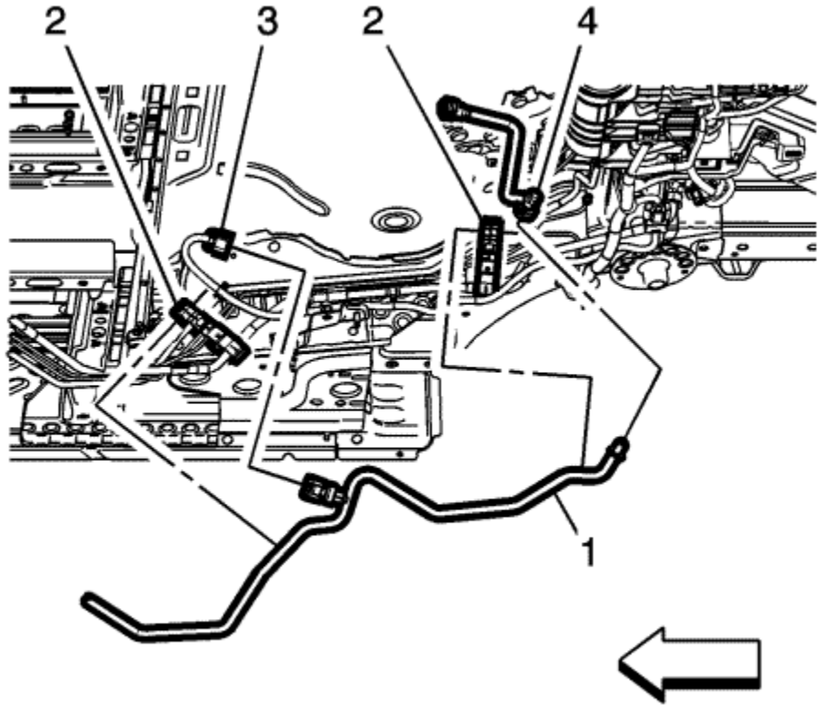

6. Remove the fuel feed pipe (1) from the plastic clips (2).
7. Disconnect the fuel pressure sensor electrical connector (3).
8. Disconnect the fuel feed pipe quick connect (4). Refer to Plastic Collar Quick Connect Fitting Service .

Installation Procedure

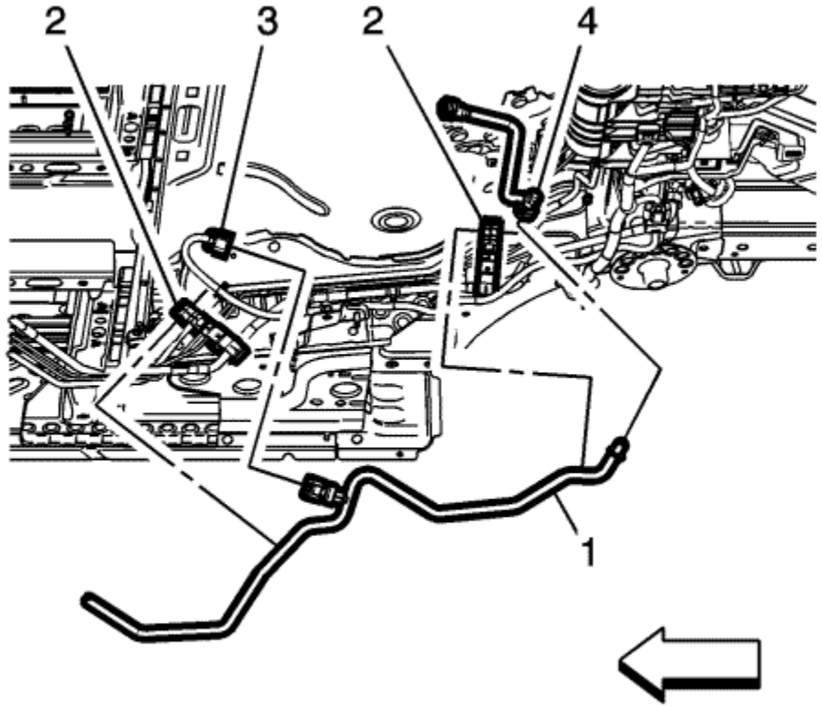

1. Connect the fuel feed pipe quick connect (4). Refer to Plastic Collar Quick Connect Fitting Service .
2. Install the fuel feed pipe (1) to the plastic clips (2).
3. Connect the fuel pressure sensor electrical connector (3).

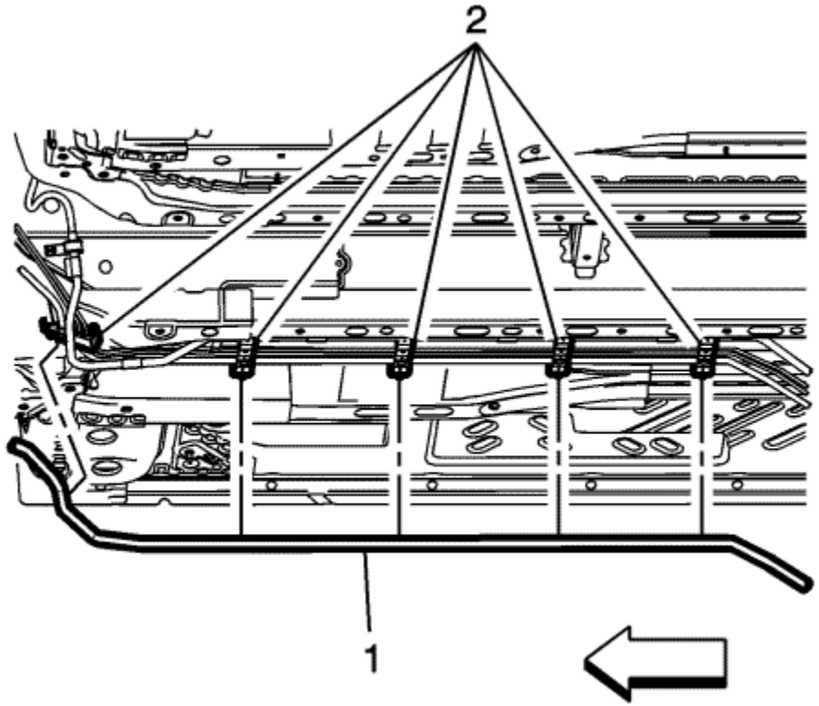

4. Install the fuel feed pipe (1) to the plastic clips (2).

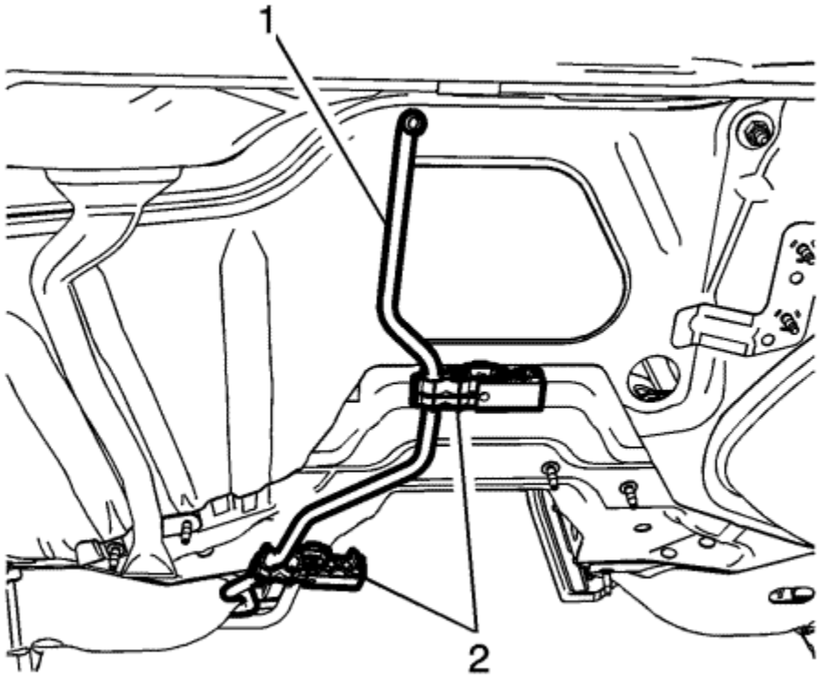

5. Install the fuel feed pipe (1) from the plastic clips (2).
6. Install the fuel tank. Refer to Fuel Tank Replacement .
7. Install the drivetrain and front suspension frame. Refer to Drivetrain and Front Suspension Frame Replacement .
8. Install the engine compartment fuel feed pipe. Refer to Fuel Feed Pipe Replacement : Chassis → Engine Compartment .

© Copyright Chevrolet. All rights reserved

Fuel Feed Pipe Replacement — Engine Compartment

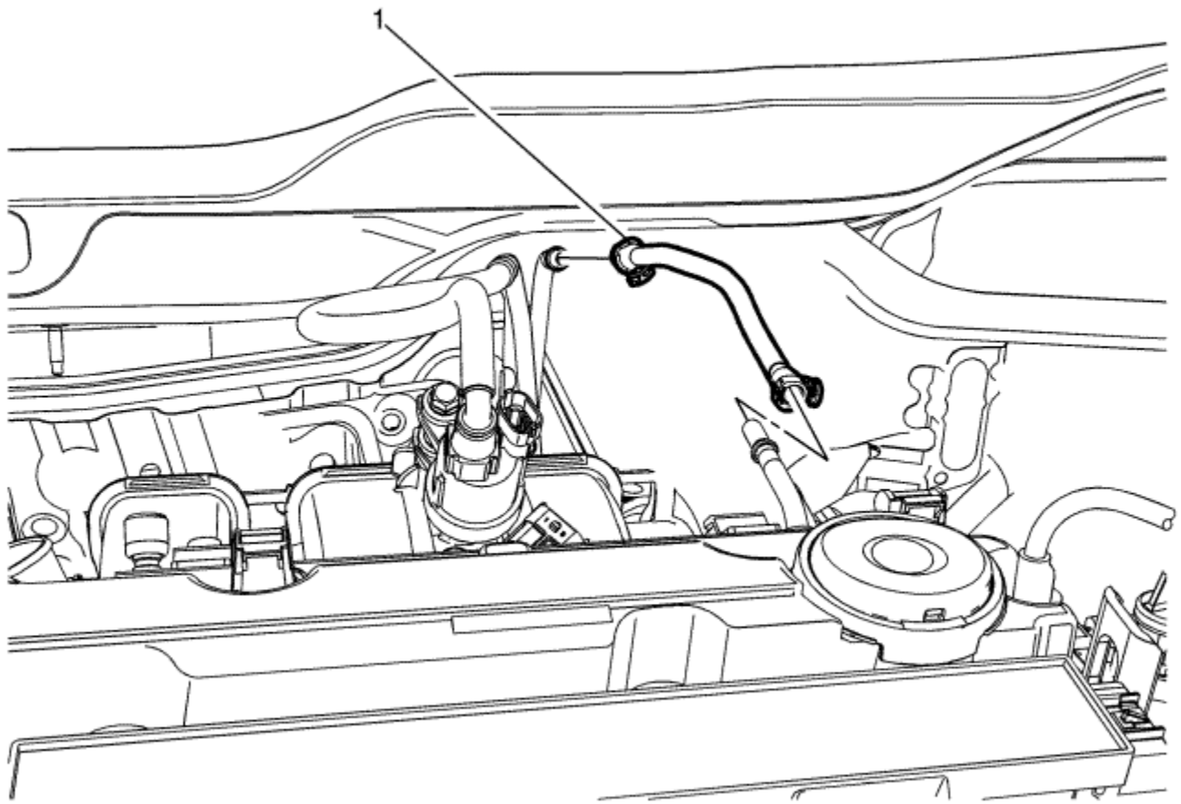

Callout	Component Name
	Preliminary Procedure
1.	Remove the air cleaner resonator. Refer to Air Cleaner Resonator Outlet Duct Replacement .
2.	Disconnect the fuel feed pipe connector. Refer to Plastic Collar Quick Connect Fitting Service .

1	Fuel Feed Pipe

© Copyright Chevrolet. All rights reserved

Fuel Tank Fuel Pump Module Replacement

Special Tools

CH 45722 Fuel Sender Lock Ring Wrench

For equivalent regional tools, refer to Special Tools : Diagnostic Tools .

Removal

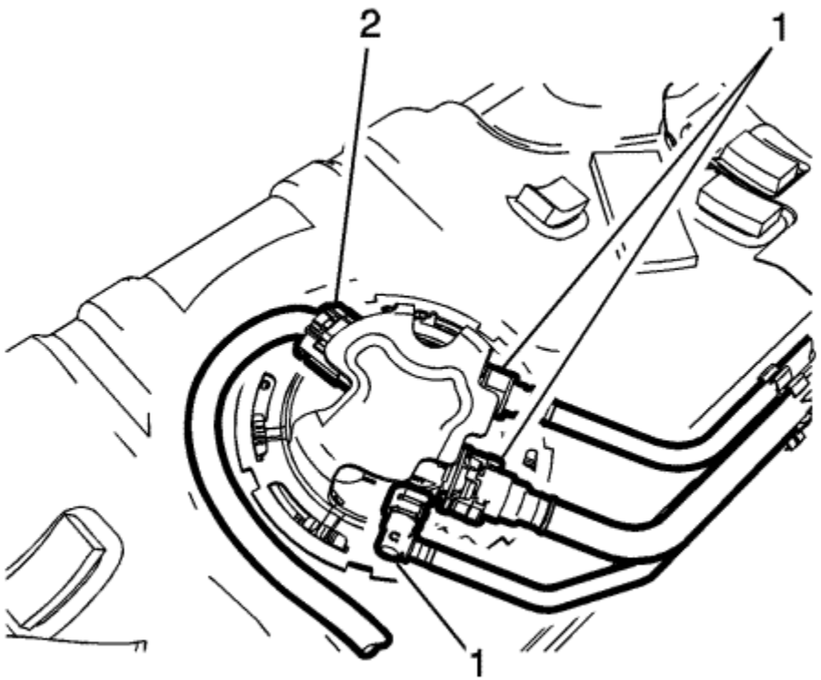

1. Remove the fuel tank. Refer to Fuel Tank Replacement .
2. Disconnect the evaporative emission and fuel lines (1). Refer to Plastic Collar Quick Connect Fitting Service .
3. Disconnect the electrical connector (2).

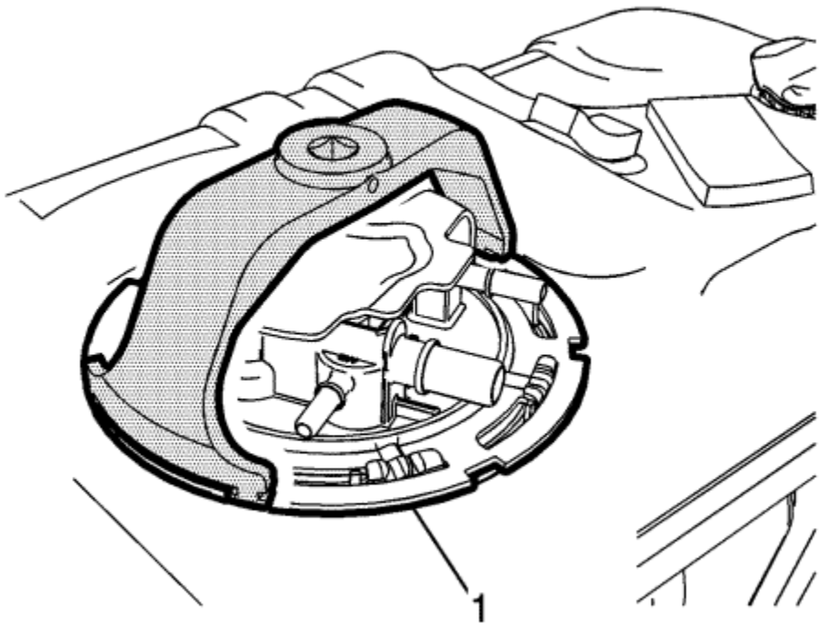

4. Using the *CH 45722* wrench, remove the lock ring (1) by turning counter-clockwise.

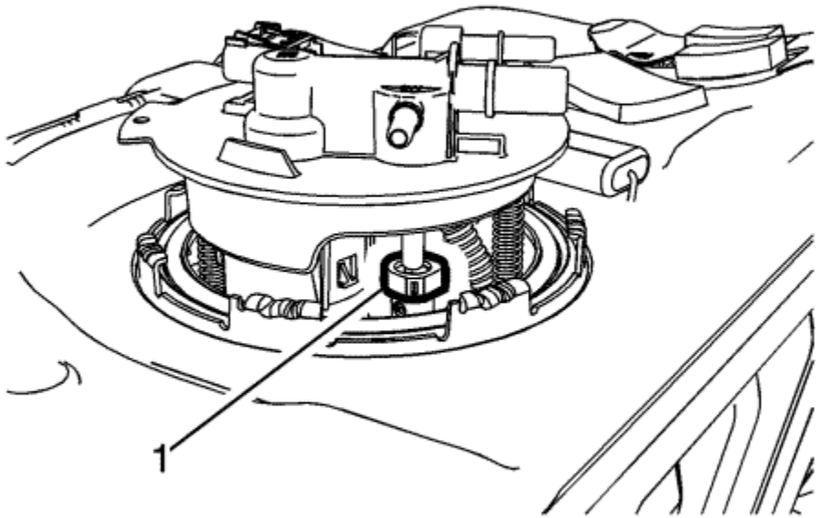

5. Partially raise the fuel pump module and disconnect the vent valve connector (1). Refer to Plastic Collar Quick Connect Fitting Service

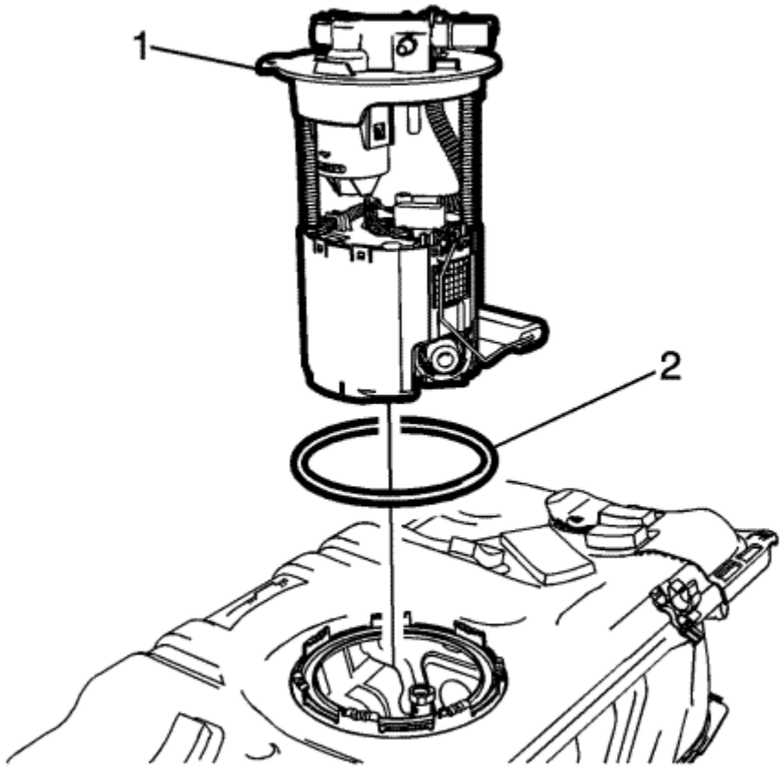

6. Remove the fuel pump module (1) and O-ring (2).

Installation Procedure

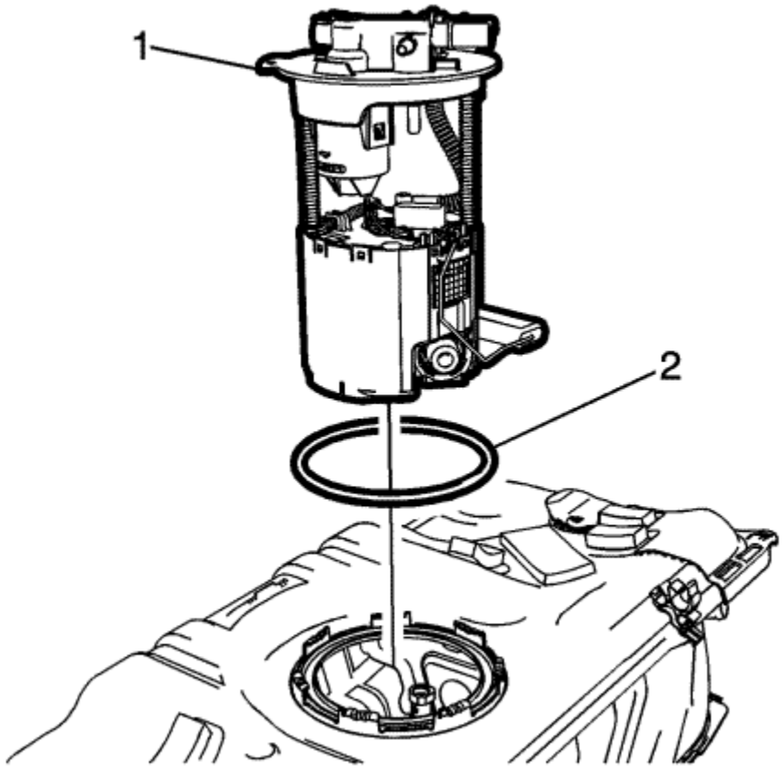

1. Install a NEW O-ring (2) and the fuel pump module (1).

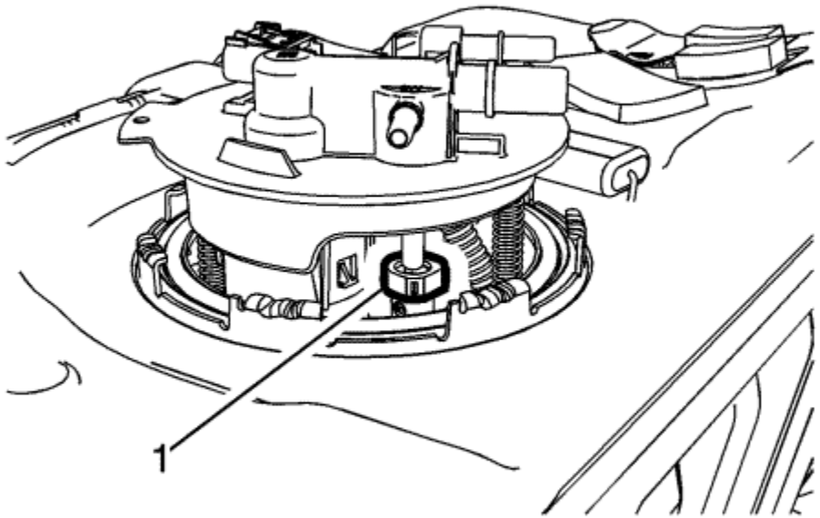

2. Connect the vent valve connector (1). Refer to Plastic Collar Quick Connect Fitting Service .

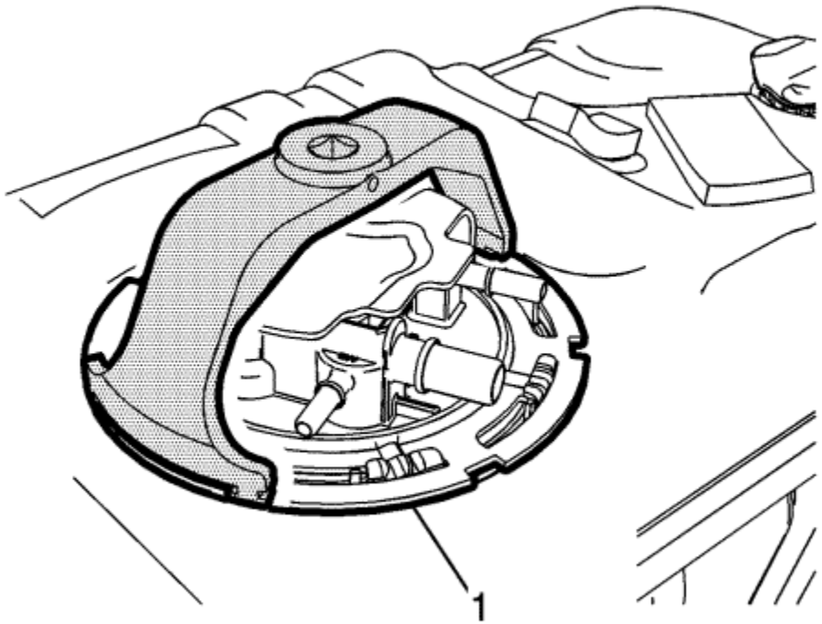

3. Using the *CH 45722* wrench, install the lock ring (1) by turning clockwise.

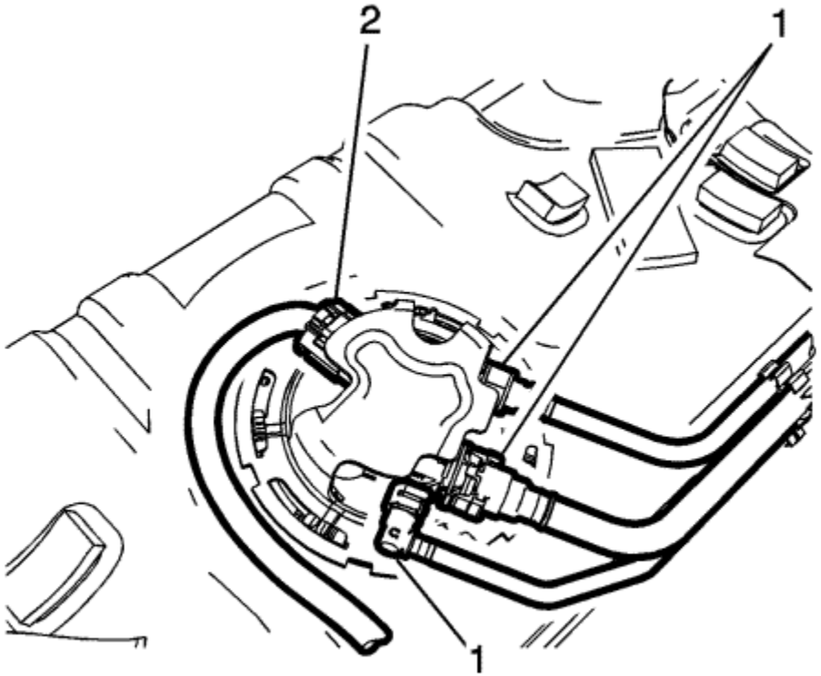

4. Connect the electrical connector (2).
5. Connect the evaporative emission and fuel lines (1). Refer to Plastic Collar Quick Connect Fitting Service .
6. Install the fuel tank. Refer to Fuel Tank Replacement .

© Copyright Chevrolet. All rights reserved

Fuel Pump Flow Control Module Replacement

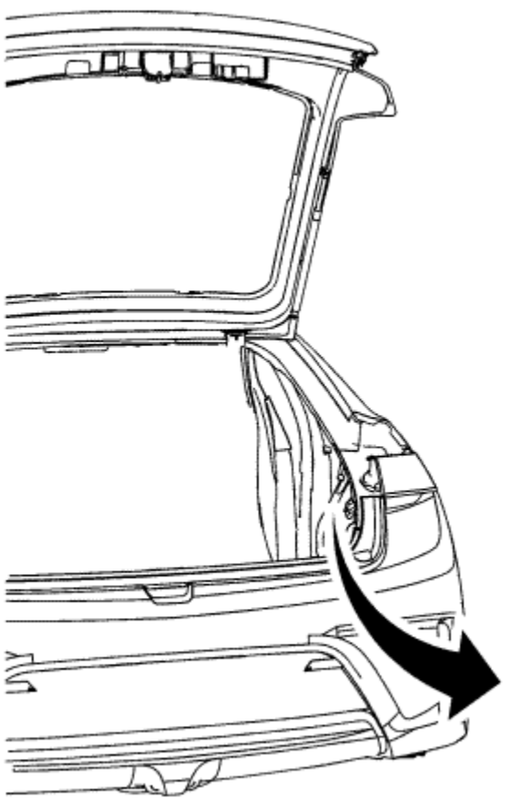

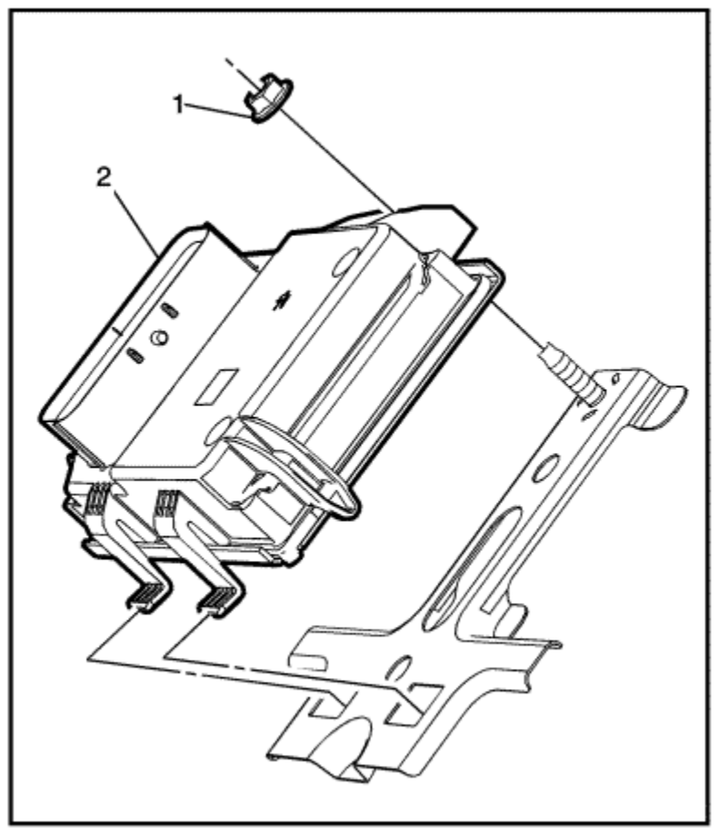

Callout	Component Name
Preliminary Procedure Remove the quarter trim panel. Refer to Quarter Inner Trim Finish Panel Replacement .	
	Fuel Pump Flow Control Module Fastener

1	**Caution:** Refer to Fastener Caution in the Preface section. **Tighten** 10 N·m(89 lb in)
2	Fuel Pump Flow Control Module **Procedure** If replacing, reprogram the control module. Refer to Control Module References

© Copyright Chevrolet. All rights reserved

Fuel Tank Pressure Sensor Replacement

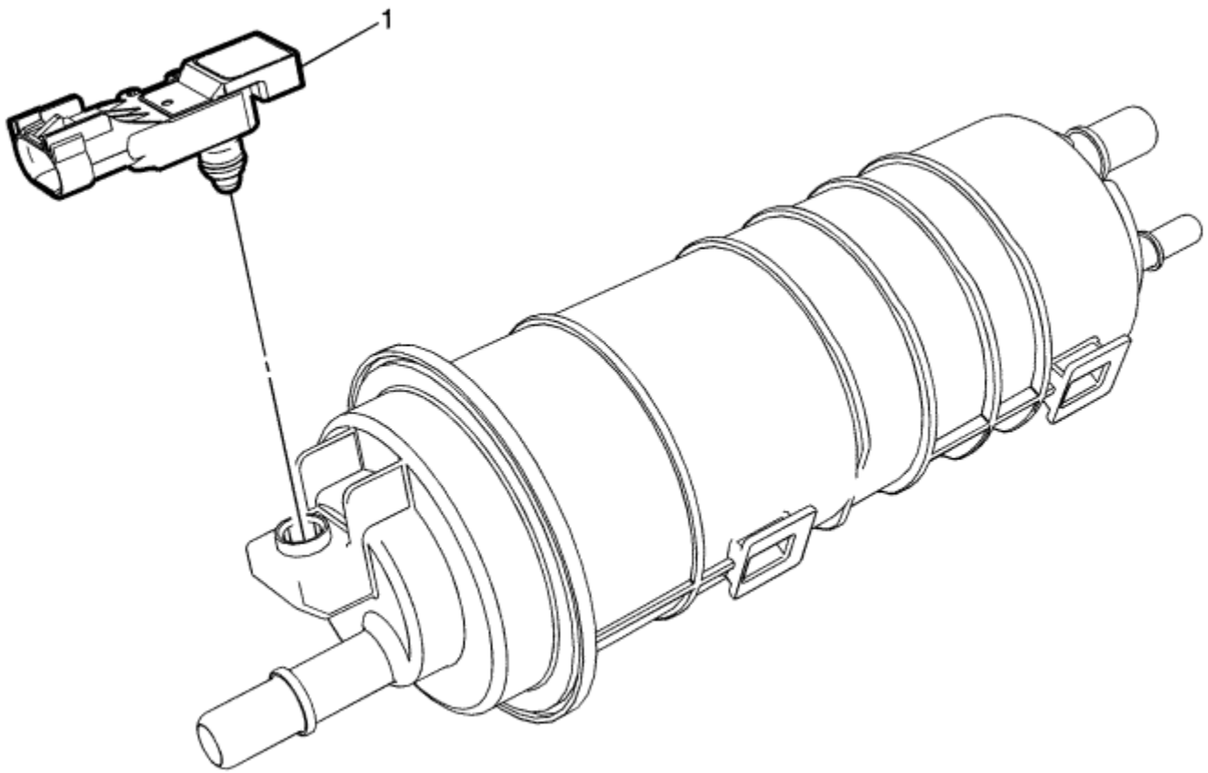

Callout	Component Name
Preliminary Procedure Remove the carbon canister. Refer to Evaporative Emission Canister Replacement .	
	Fuel Tank Fuel Pressure Sensor

1	**Procedure** Disconnect the electrical connector.

© Copyright Chevrolet. All rights reserved

Fuel Level Sensor Replacement

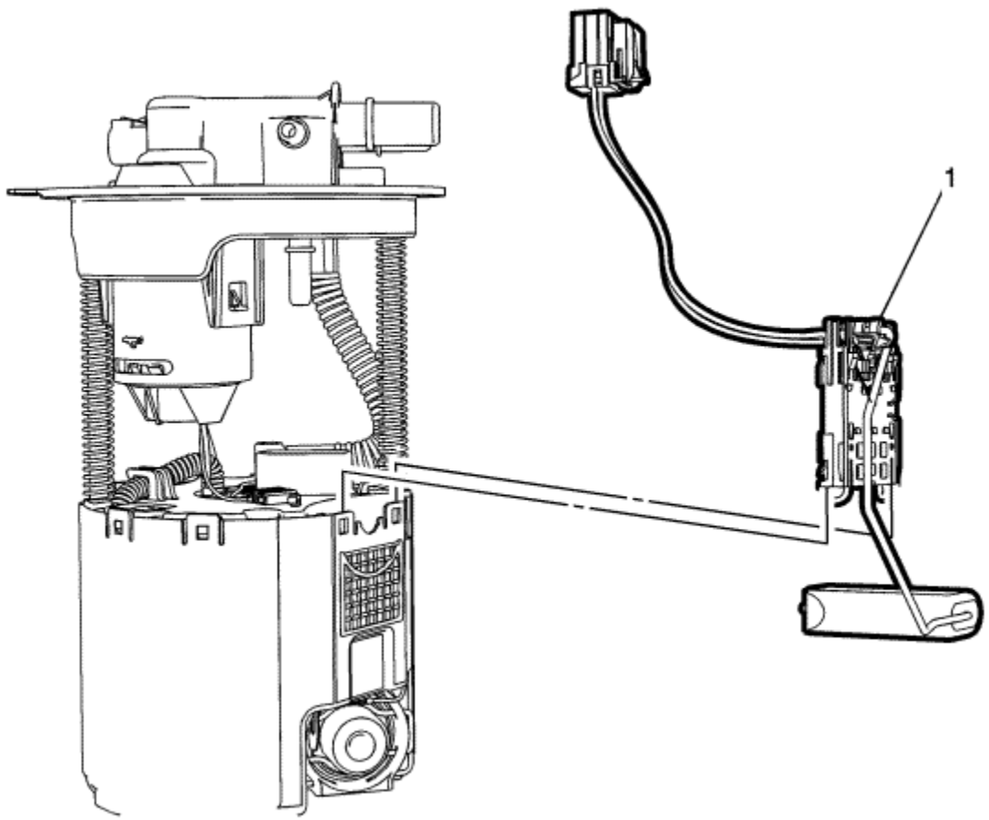

Callout	Component Name
Preliminary Procedure Remove the fuel pump module. Refer to Fuel Tank Fuel Pump Module Replacement .	
	Fuel Level Sensor

1	**Procedure** 1. Release the retaining tabs. 2. Disconnect the electrical connector.

© Copyright Chevrolet. All rights reserved

Plastic Collar Quick Connect Fitting Service

Removal Procedure

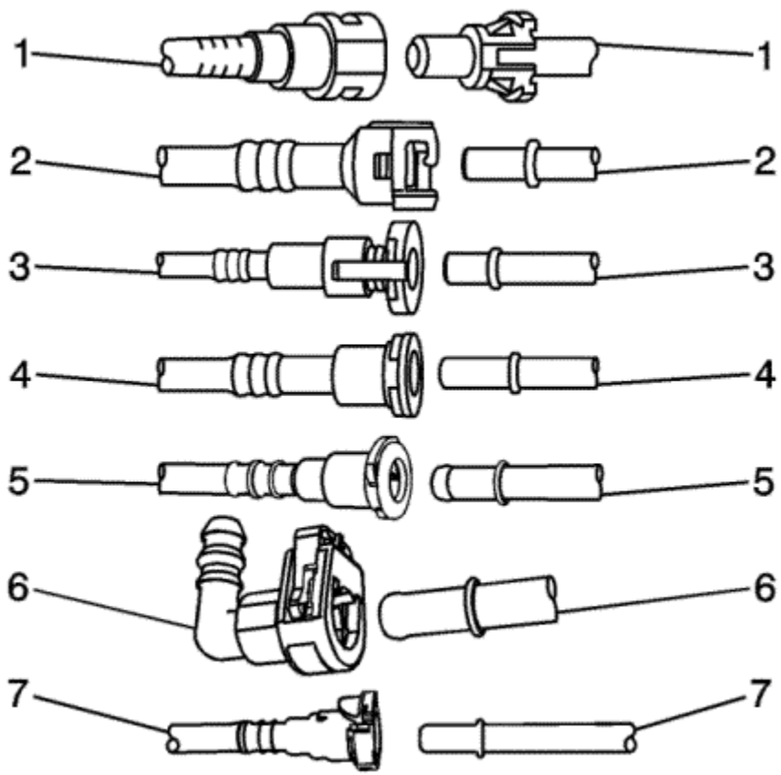

Warning: Refer to Petrol/Petrol Vapours Warning in the Preface section.

Note: There are several types of Plastic Collar Fuel and Evaporative Emission Quick Connect Fittings used on this vehicle.

- Bartholomew (1)
- Q Release (2)

- Squeeze to Release (3)
- Sliding Retainer (4)
- Global Connect (5)
- TI Loc (6)
- Safe Lock (7)

The following instructions apply to all of these types of Plastic Collar Quick Connect Fittings except where indicated.

Warning: Refer to Safety Glasses and Compressed Air Warning in the Preface section.

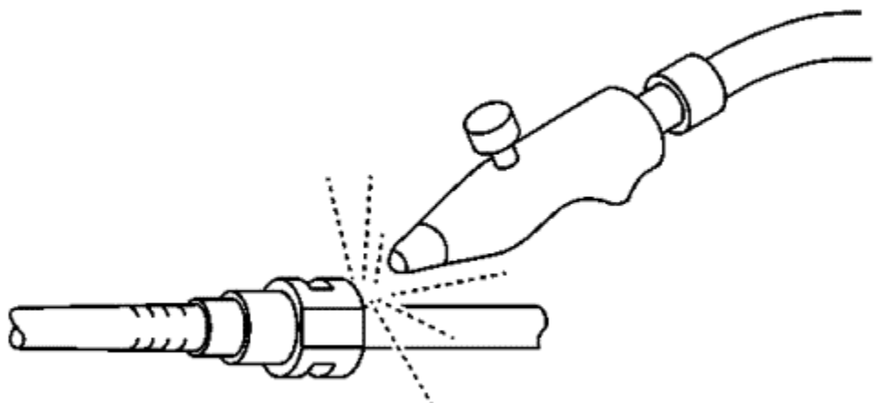

1. Using compressed air, blow any dirt out of the quick-connect fitting.

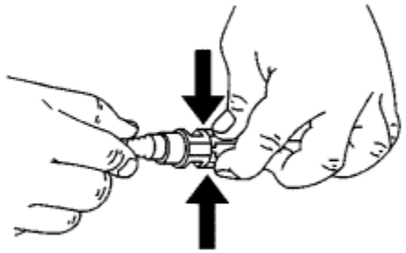

2. This step applies to Bartholomew style connectors ONLY. Squeeze the plastic quick-connect fitting release tabs.

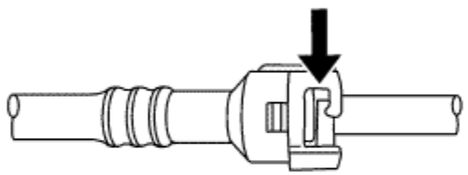

3. This step applies to Q Release style connectors ONLY. Release the fitting by Pushing the tab toward the other side of the slot in the fitting.

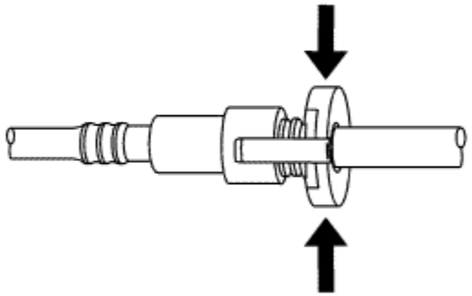

4. This step applies to Squeeze to Release style connectors ONLY. Squeeze where indicated by arrows on both sides of the plastic ring surrounding the quick-connect fitting.

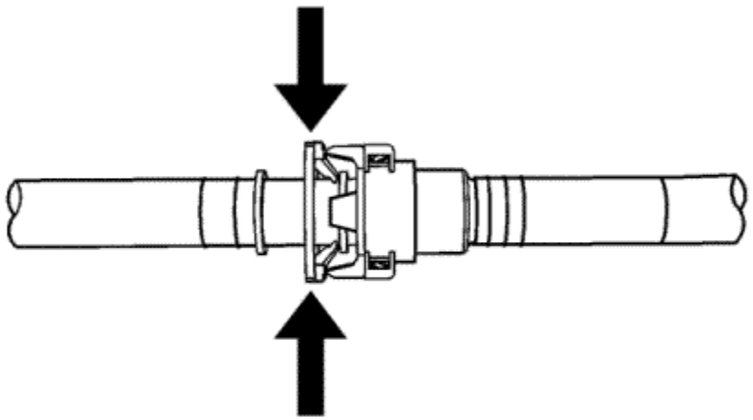

5. This step applies to Squeeze to Release style connectors ONLY. Push in the male side slightly in order to slide the retainer away from the retainers, squeeze where indicated by arrows on both sides of the plastic ring surrounding the quick-connect fitting.

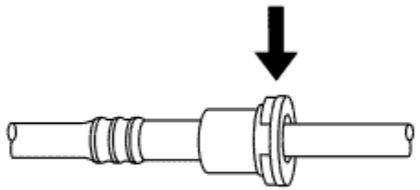

6. This step applies to Sliding Retainer style connectors ONLY. Release the fitting by pressing on one side of the release tab causing it to push in slightly. If the tab doesn't move try pressing the tab in from the opposite side. The tab will only move in one direction.

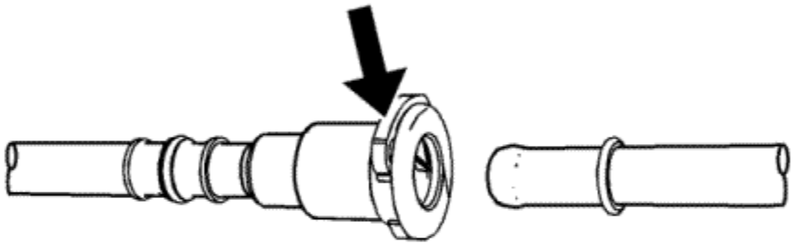

7. This step applies to the Global Connector style only. Push the connector toward the tube in order to release the pressure. Press and hold down the release mechanism, and pull the connector straight out.

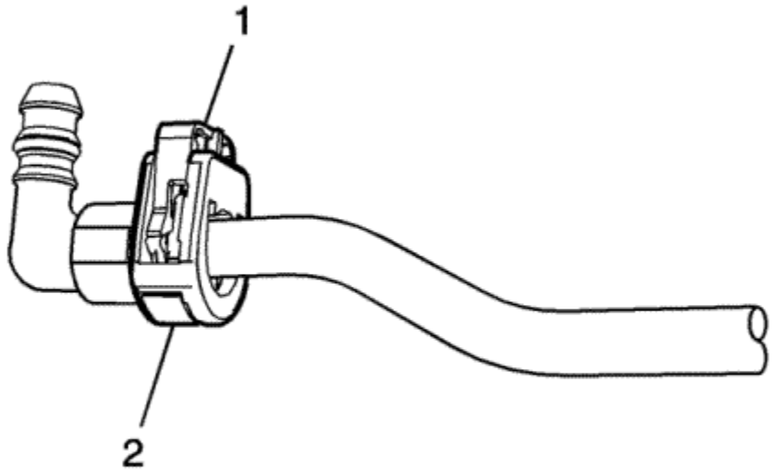

8. This step applies to the TI Loc style only. Push the connector toward the tube in order to release the pressure. Release the redundant latch (1) with two fingers or a flat bladed tool. Then press and hold down the bottom release mechanism (2) and pull the connector straight out.

   Warning: Refer to Relieving Fuel Pressure Warning in the Preface section.

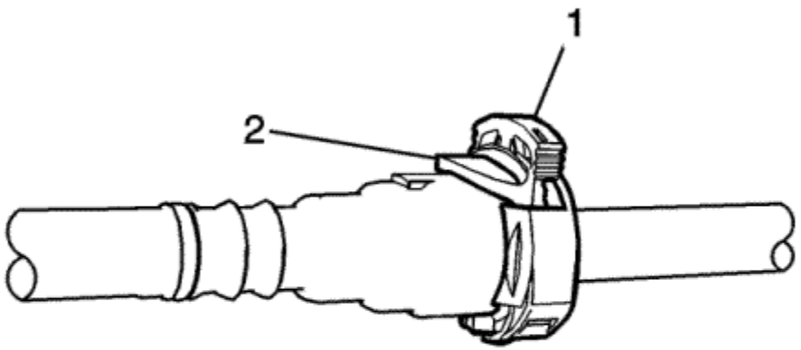

9. This step applies to the Safe Lock style only. Push the connector toward the tube in order to release the pressure. Release the second latch (1) with two fingers. Then press and hold down the bottom release mechanism (2) and pull the connector straight out.
10. Using a clean shop towel, wipe off the male pipe end.
11. Inspect both ends of the fitting for dirt and burrs.
12. Clean or replace components as necessary.

Installation Procedure

Warning: Refer to Fuel Pipe Fitting Warning in the Preface section.

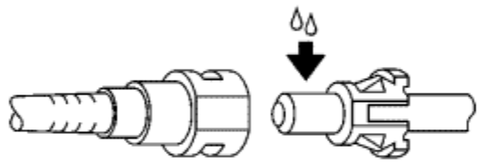

1. Apply a few drops of clean engine oil to the male pipe end.

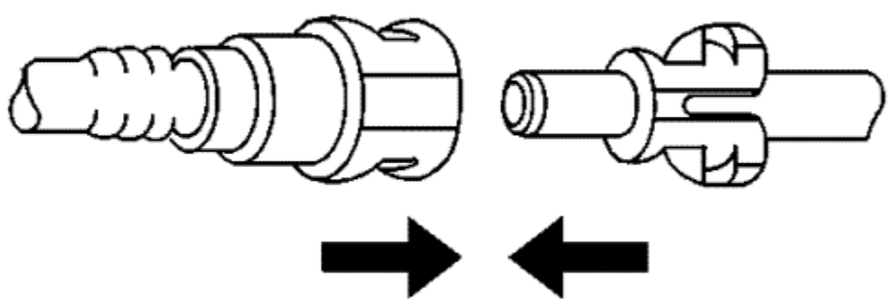

2. Push both sides of the quick-connect fitting together in order to cause the retaining feature to snap into place.

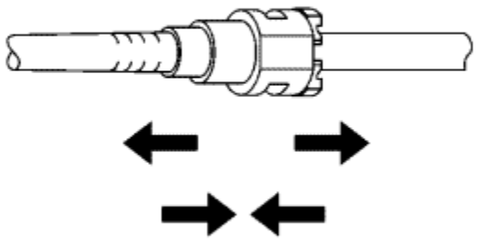

3. Pull on both sides of the quick-connect fitting to make sure the connection is secure.

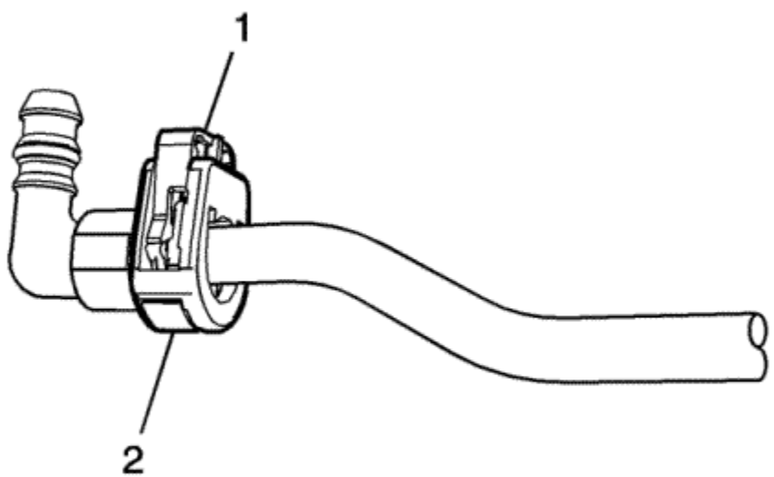

4. Insert the tube in the connector until the retainer snaps in place.
5. Push down on the redundant latch (1) until it is fully engaged and snapped into position.

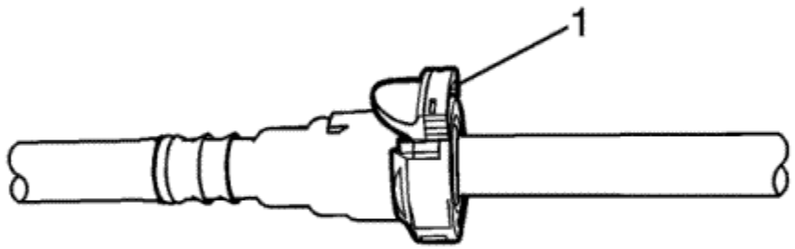

6. Insert the tube in the connector until the retainer snaps in place.
7. Push down on the second latch (1) in order to secure the connection.
8. Inspect for leaks using the following procedure:
   8.1. Turn the ignition ON, with the engine OFF for 2 seconds.
   8.2. Turn the ignition OFF, for 10 seconds.
   8.3. Turn the ignition ON, with the engine OFF for 2 seconds.
   8.4. Turn the ignition OFF.
   8.5. Inspect for leaks.

&#169© Copyright Chevrolet. All rights reserved

Fuel Injection Fuel Rail Assembly Replacement

Removal Procedure

1. Disconnect the battery negative cable. Refer Battery Negative Cable Disconnection and Connection .
2. Remove the resonator outlet duct. Refer to Air Cleaner Resonator Outlet Duct Replacement .
3. Disconnect the fuel feed pipe from the fuel rail. Refer to Plastic Collar Quick Connect Fitting Service .

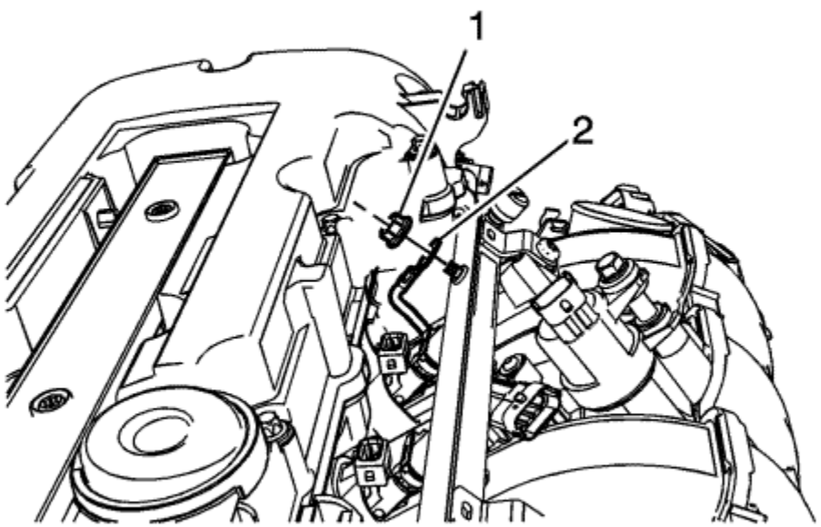

4. Remove the fuel injection ground fastener (1) and reposition the ground cable (2).
5. Disconnect the electrical connectors.

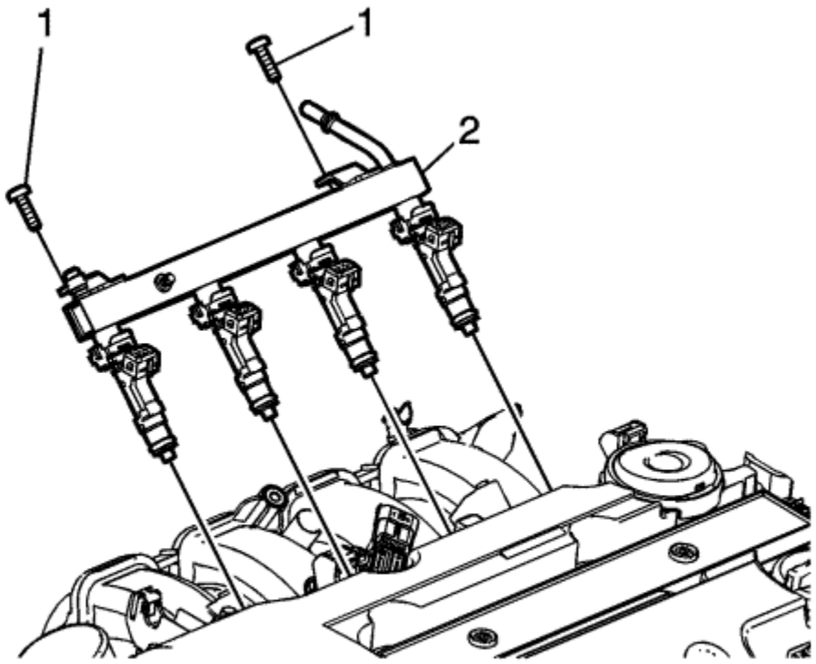

6. Remove the fuel injection fuel rail fasteners (1) and fuel injection fuel rail (2).
7. Remove the fuel injectors. Refer to Fuel Injector Replacement .

Installation Procedure

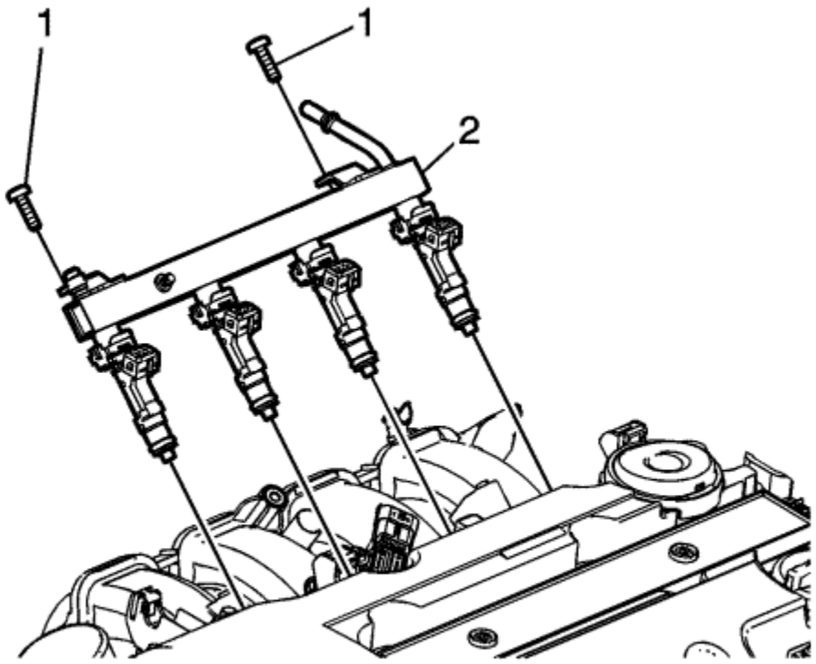

1. Install the injectors. Refer to Fuel Injector Replacement .
2. Use new O-rings and lubricate with clean engine oil. Refer to Adhesives, Fluids, Lubricants, and Sealers .

   Caution: Refer to Fastener Caution in the Preface section.

3. Install the fuel injection fuel rail assembly (2) and tighten the fasteners to **8 N·m (71 lb in)**.

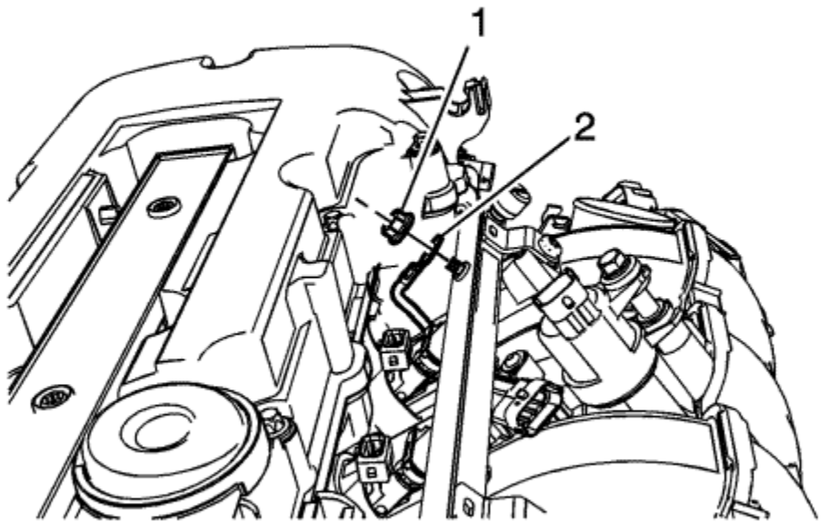

4. Reposition the ground cable (2), install the fuel injection ground fastener (1) and tighten to **4 N·m (35 lb in)**.
5. Connect the electrical connectors.
6. Connect the fuel feed pipe from the fuel rail. Refer to Plastic Collar Quick Connect Fitting Service .
7. Install the resonator outlet duct. Refer to Air Cleaner Resonator Outlet Duct Replacement .
8. Connect the battery negative cable. Refer Battery Negative Cable Disconnection and Connection .

© Copyright Chevrolet. All rights reserved

Fuel Injector Replacement

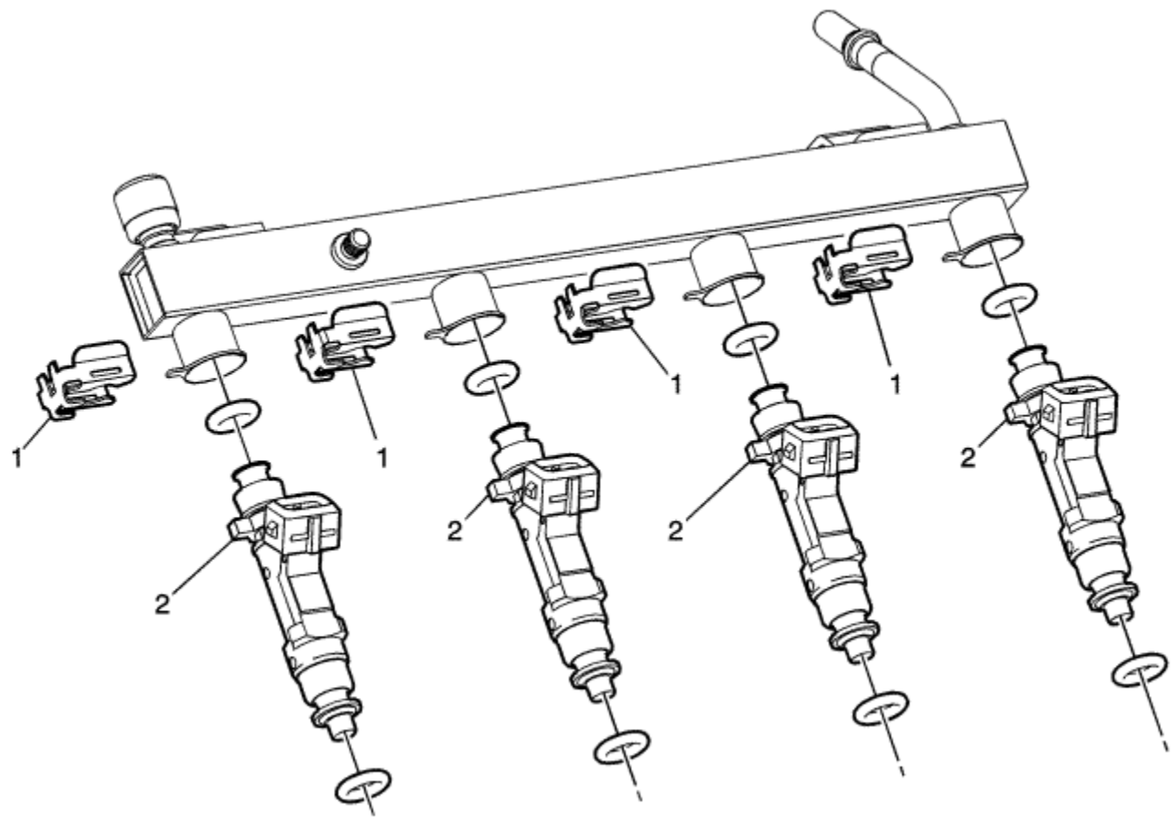

Callout	Component Name
Preliminary Procedures 1. Disconnect the battery negative cable. Refer to Battery Negative Cable Disconnection and Connection . 2. Remove the fuel injection fuel rail assembly. Refer to Fuel Injection Fuel Rail Assembly Replacement .	

1	Fuel Injector Clip (Qty: 4)
2	Fuel Injector (Qty: 4) **Procedure** 1. Use NEW fuel injector O-rings. 2. Lubricate the injector O-rings with clean engine oil.

© Copyright Chevrolet. All rights reserved

Evaporative Emission Canister Vent Solenoid Valve Replacement

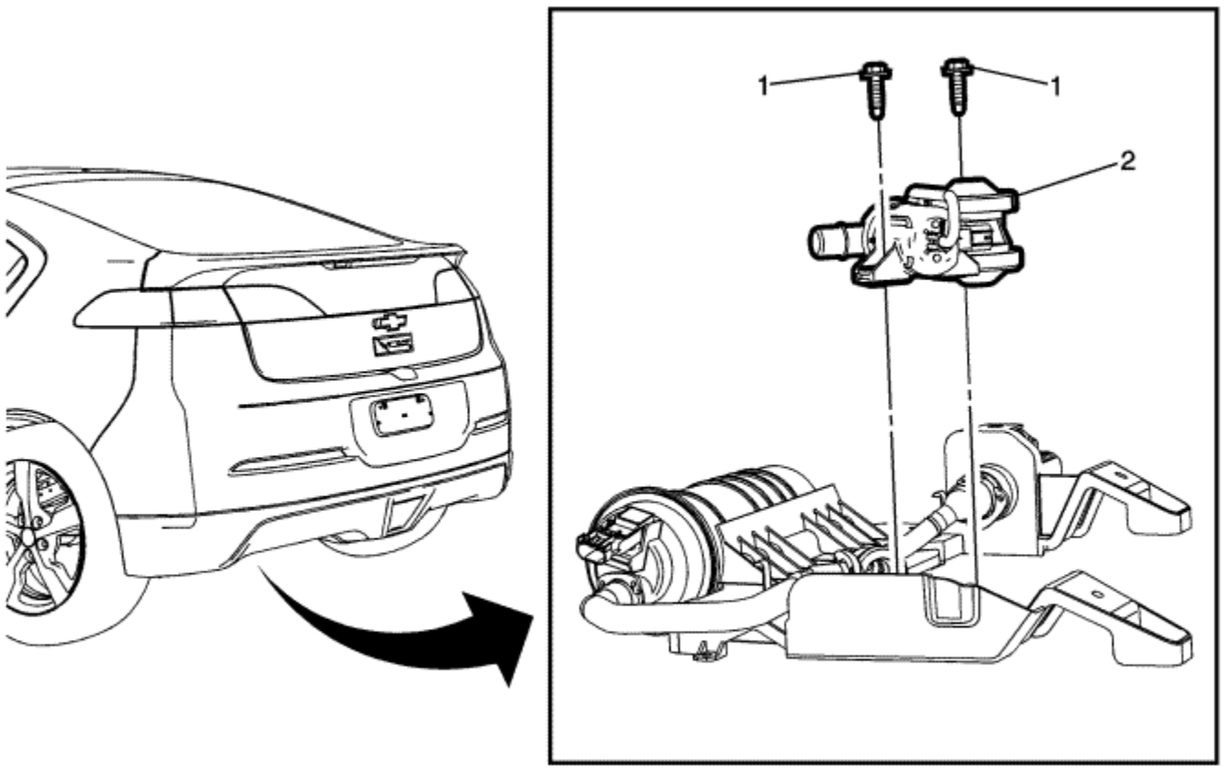

Callout	Component Name

Danger: Do not use a service jack in locations other than those specified to lift this vehicle. Lifting the vehicle with a jack in those other locations could cause the vehicle to slip off the jack and roll; this could cause injury or death.

Preliminary Procedure

1. Remove the rear underbody air deflector. Refer to Underbody Rear Air Deflector Replacement .
2. Lower the canister bracket to gain access to the vent solenoid valve.

1	Evaporative Emission Vent Solenoid Valve Fastener (Qty: 2) **Caution:** Refer to Fastener Caution in the Preface section. **Tighten** 7 N·m(62 lb in)
2	Evaporative Emission Vent Solenoid Valve **Procedure** 1. Disconnect the evaporative emission connectors. Refer to Plastic Collar Quick Connect Fitting Service . 2. Disconnect the electrical connector.

© Copyright Chevrolet. All rights reserved

Evaporative Emission Canister Replacement

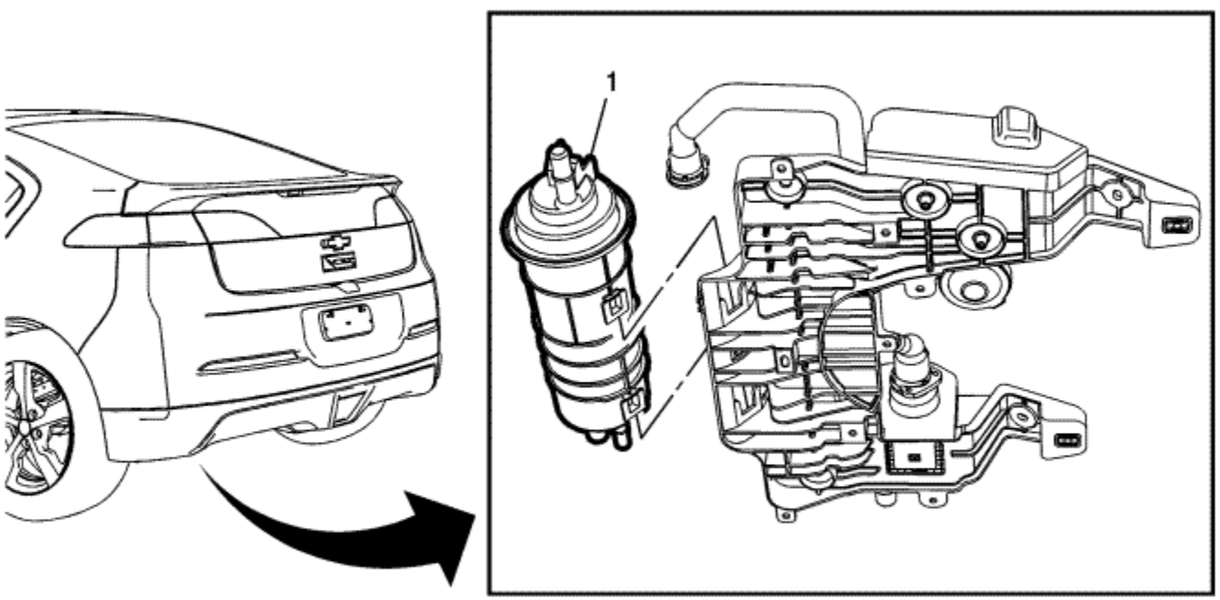

Callout	Component Name

Danger: Do not use a service jack in locations other than those specified to lift this vehicle. Lifting the vehicle with a jack in those other locations could cause the vehicle to slip off the jack and roll; this could cause injury or death.

Preliminary Procedure

Raise and support the vehicle. Refer to Lifting and Jacking the Vehicle .	
1	Evaporative Emission Canister **Procedure** 1. Disconnect the evaporative emission connectors. Refer to Plastic Collar Quick Connect Fitting Service . 2. Release the retaining tab using a flat bladed tool while simultaneously sliding the canister to the left. 3. Disconnect the fuel pressure sensor electrical connector. 4. Transfer parts as necessary.

© Copyright Chevrolet. All rights reserved

Evaporative Emission Canister Purge Solenoid Valve Replacement

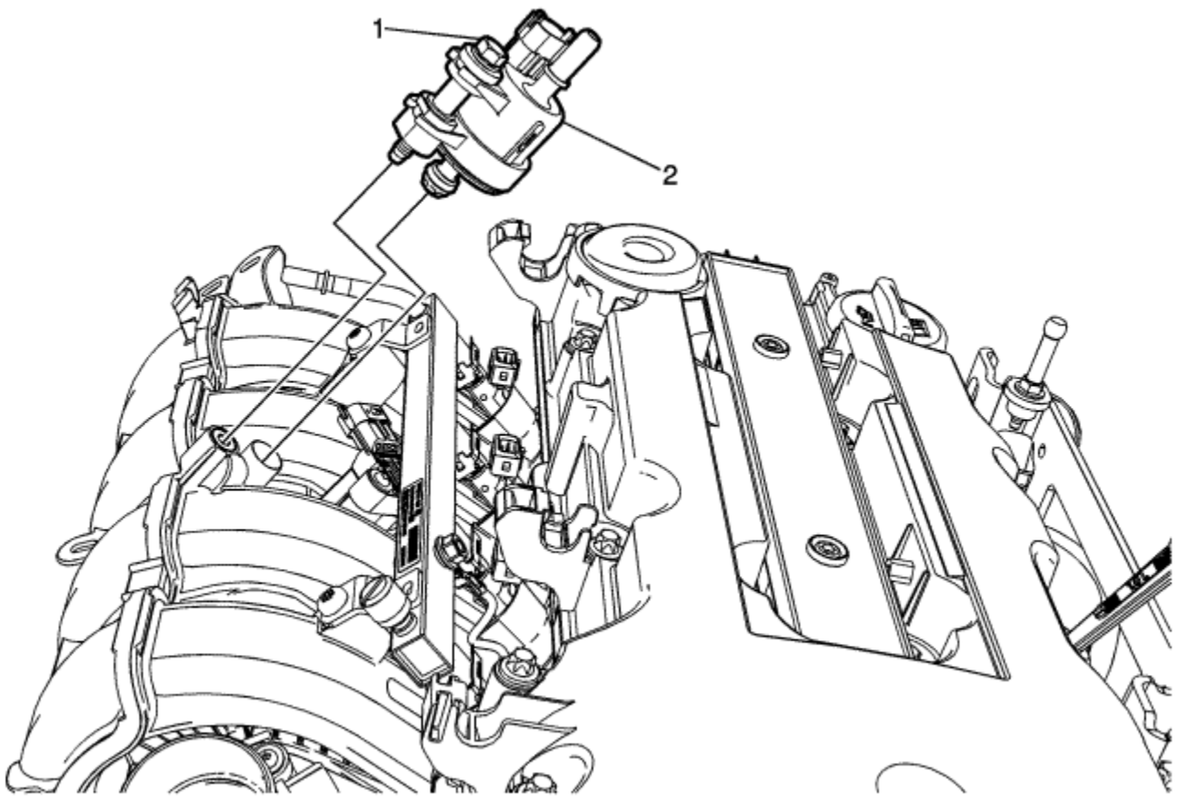

Callout	Component Name
	Preliminary Procedure
1.	Remove the air cleaner resonator outlet duct. Refer to Air Cleaner Resonator Outlet Duct Replacement .
2.	Disconnect the plastic connector. Refer to Plastic Collar Quick Connect Fitting Service

1	Evaporative Emission Canister Purge Solenoid Valve Fastener **Caution:** Refer to Fastener Caution in the Preface section. **Tighten** 10 N·m (89 lb in)
2	Evaporative Emission Canister Purge Solenoid Valve **Procedure** Disconnect the electrical connector.

© Copyright Chevrolet. All rights reserved

Evaporative Emission System Vacuum Leak Detection Pump Replacement

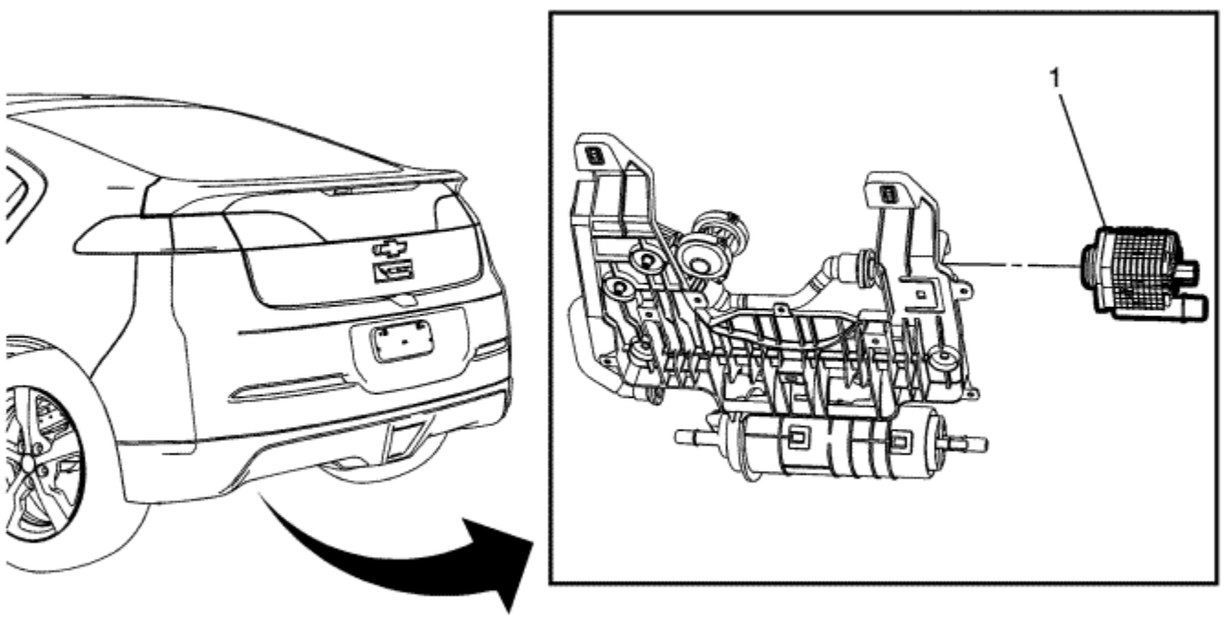

Callout	Component Name

Danger: Do not use a service jack in locations other than those specified to lift this vehicle. Lifting the vehicle with a jack in those other locations could cause the vehicle to slip off the jack and roll; this could cause injury or death.

Preliminary Procedure

Raise and support the vehicle. Refer to Lifting and Jacking the Vehicle .	
1	Evaporative Emission System Vacuum Leak Pump **Procedure** 1. Disconnect the evaporative emission connector. Refer to Plastic Collar Quick Connect Fitting Service . 2. Release the retaining tabs. 3. Disconnect the electrical connector.

© Copyright Chevrolet. All rights reserved

Evaporative Emission System Cleaning

Special Tools

GE 41413 Evaporative Pressure and Purge Station

For equivalent regional tools, refer to Special Tools : Diagnostic Tools .

Inspection Procedure

Caution: Use the EVAP Pressure/Purge Diagnostic Station CH 41413 in order to provide a clean, dry, low pressure gas source. Do not substitute any other pressurised gas source. Damage may result to the EVAP system.

Note: Proceed with the following procedure only if referenced by an evaporative emission diagnostic or repair procedure.

1. Turn OFF the ignition.
2. Remove the evaporative canister purge valve. Refer to Evaporative Emission Canister Purge Solenoid Valve Replacement .
3. Lightly tap the evaporative canister purge valve on a hard surface.
4. Inspect for carbon particles exiting either of the vacuum ports.
   - If no carbon particles were detected, but a blockage was detected during a diagnostic procedure, install the original evaporative canister purge valve. Continue with the cleaning procedure.
   - If carbon particles are found during the inspection procedure, continue with the cleaning procedure.
   - If a diagnostic procedure directed you to replace the evaporative canister purge valve and no carbon particles were detected, replace the evaporative canister purge valve. Return to the published service procedure.

Cleaning Procedure

1. Remove the evaporative canister. Refer to Evaporative Emission Canister Replacement .
2. Turn OFF the main valve on the *GE 41413* purge station .
3. Disconnect the hose from the diagnostic station pressure regulator.
4. Using a section of vacuum hose, connect one end onto the evaporative pressure/purge diagnostic station pressure regulator.
5. Connect the other end of the vacuum hose to the canister side of the purge pipe.
6. Turn ON the main nitrogen cylinder valve and continue to discharge nitrogen for 15 seconds.
7. If the nitrogen does not clear the blockage, replace the purge pipe.

8. Return the evaporative pressure/purge diagnostic station to the stations original condition.
9. Install a new evaporative canister. Refer to Evaporative Emission Canister Replacement .
10. Install a new evaporative canister purge valve. Refer to Evaporative Emission Canister Purge Solenoid Valve Replacement .
11. Return to the diagnostic table that sent you here.

&#169© Copyright Chevrolet. All rights reserved

Ignition Coil Replacement

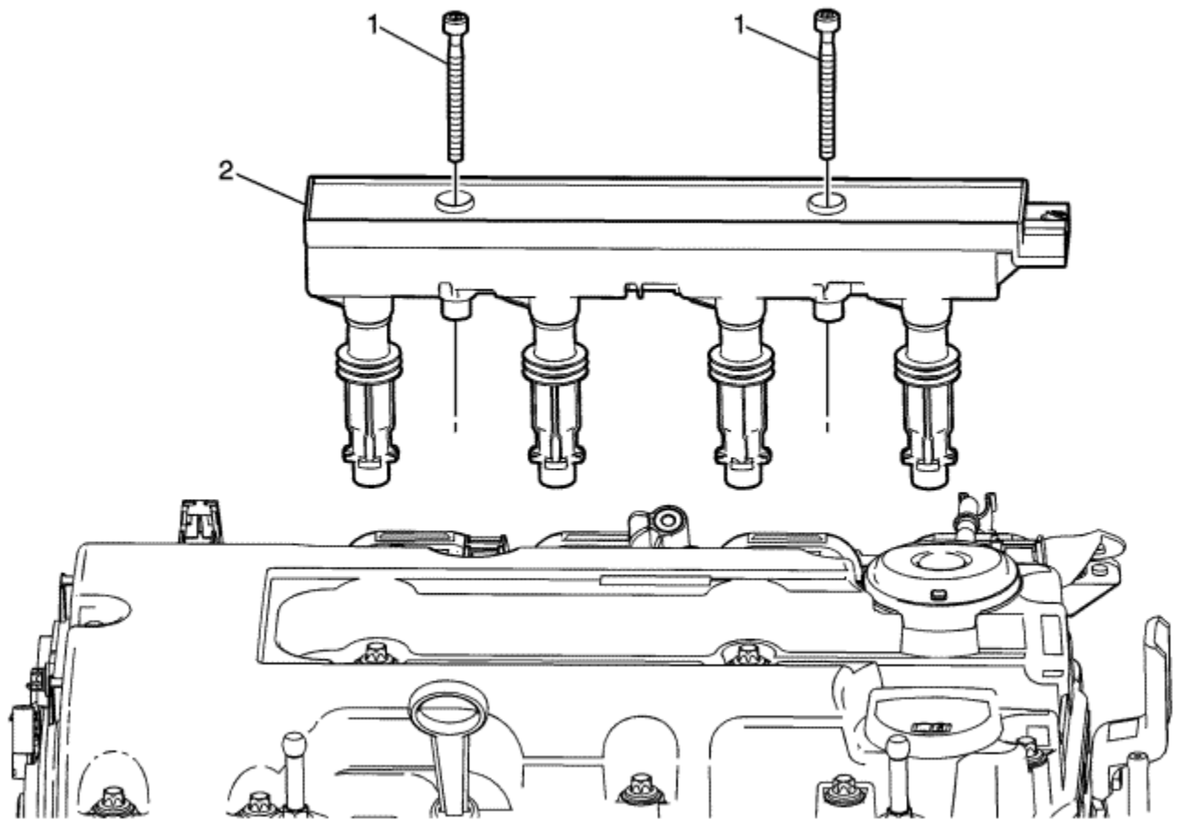

Callout	Component Name
Preliminary Procedure Remove the air cleaner resonator. Refer to Air Cleaner Resonator Outlet Duct Replacement .	
	Ignition Coil Fastener (Qty: 2)

1	**Caution:** Refer to Fastener Caution in the Preface section. **Tighten** 8 N·m(71 lb in) **Special Tools** *EN 6009* Remover and Installer Ignition Module For equivalent regional tools, Refer to Special Tools : Diagnostic Tools
2	Ignition Coil **Procedure** Disconnect the electrical connector.

© Copyright Chevrolet. All rights reserved

Spark Plug Inspection

Spark Plug Usage

1. Ensure that the correct spark plug is installed. An incorrect spark plug causes driveability conditions. Refer to the Electronic Parts Catalogue.
2. Ensure that the spark plug has the correct heat range. An incorrect heat range causes the following conditions:
   - Spark plug fouling--Colder plug
   - Pre-ignition causing spark plug and/or engine damage--Hotter plug

Spark Plug Inspection

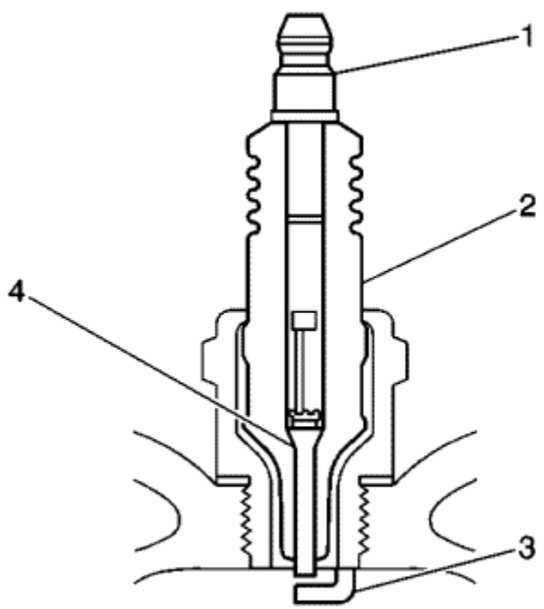

1. Inspect the terminal post (1) for damage.
   - Inspect for a bent or broken terminal post (1).

- Test for a loose terminal post (1) by twisting and pulling the post. The terminal post (1) should NOT move.

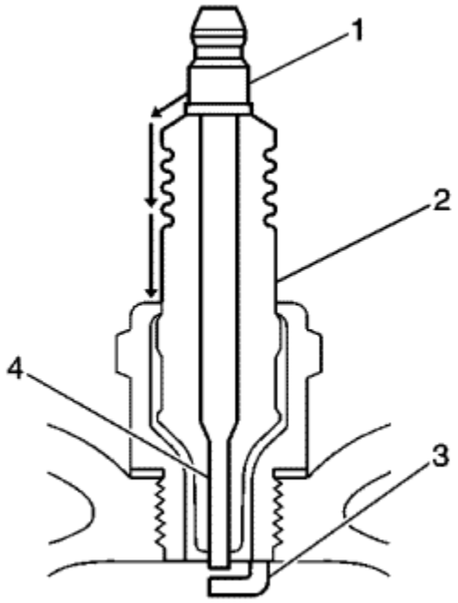

2. Inspect the insulator (2) for flash-over or carbon tracking, soot. This is caused by the electrical charge travelling across the insulator (2) between the terminal post (1) and ground. Inspect for the following conditions:
   - Inspect the spark plug boot for damage.
   - Inspect the spark plug recess area of the cylinder head for moisture, such as oil, coolant, or water. A spark plug boot that is saturated causes arcing to ground.

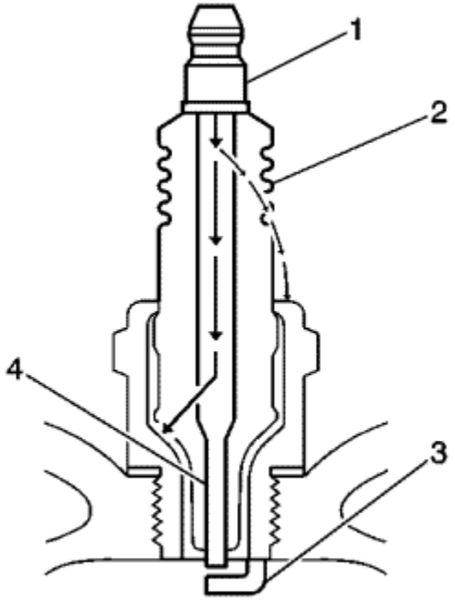

3. Inspect the insulator (2) for cracks. All or part of the electrical charge may arc through the crack instead of the electrodes (3, 4).

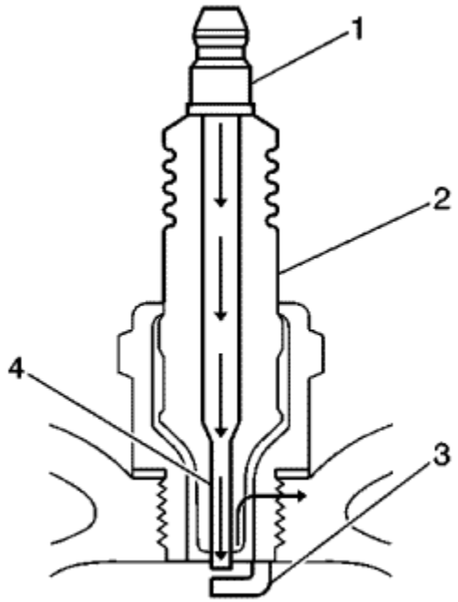

4. Inspect for evidence of improper arcing.
   - Measure the gap between the centre electrode (4) and the side electrode (3) terminals. Refer to Ignition System Specifications . An excessively wide electrode gap can prevent correct spark plug operation.
   - Inspect for the correct spark plug torque. Refer to Ignition System Specifications . Insufficient torque can prevent correct spark plug operation. An over torqued spark plug, causes the insulator (2) to crack.
   - Inspect for signs of tracking that occurred near the insulator tip instead of the centre electrode (4).
   - Inspect for a broken or worn side electrode (3).
   - Inspect for a broken, worn, or loose centre electrode (4) by shaking the spark plug.
5. A rattling sound indicates internal damage.
6. A loose centre electrode (4) reduces the spark intensity.
   - Inspect for bridged electrodes (3, 4). Deposits on the electrodes (3, 4) reduce or eliminates the gap.
   - Inspect for worn or missing platinum pads on the electrodes (3, 4) If equipped.
   - Inspect for excessive fouling.
   - Inspect the spark plug recess area of the cylinder head for swarf. Dirty or damaged threads can cause the spark plug not to seat correctly during installation.

Spark Plug Visual Inspection

1. Normal operation--Brown to greyish-tan with small amounts of white powdery deposits are normal combustion by-products from fuels with additives.

2. Carbon Fouled--Dry, fluffy black carbon, or soot caused by the following conditions:
   - Rich fuel mixtures
   - Leaking fuel injectors
   - Excessive fuel pressure
   - Restricted air filter element
   - Incorrect combustion
   - Reduced ignition system voltage output
   - Weak coils
   - Worn ignition wires
   - Incorrect spark plug gap
   - Excessive idling or slow speeds under light loads can keep spark plug temperatures so low that normal combustion deposits may not burn off.
   - Deposit Fouling--Oil, coolant, or additives that include substances such as silicone, very white coating, reduces the spark intensity. Most powdery deposits will not effect spark intensity unless they form into a glazing over the electrode.

&#169© Copyright Chevrolet. All rights reserved

Spark Plug Replacement

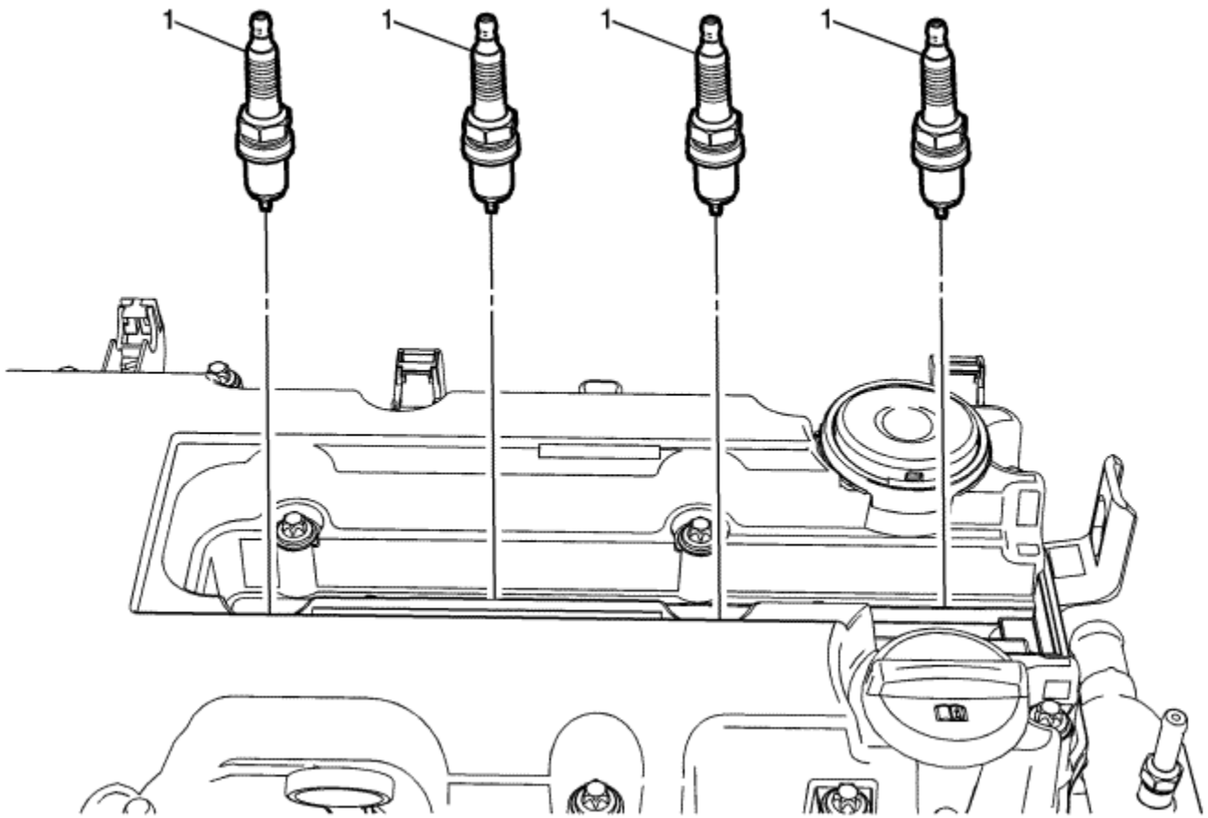

Callout	Component Name
Preliminary Procedure Remove the ignition coil. Refer to Ignition Coil Replacement .	
	Spark Plug (Qty: 4)

1	**Caution:** Refer to Fastener Caution in the Preface section. **Tighten** 25 N·m (18 lb ft) **Special Tools** *EN-194-E* Spark Plug Remover/Installer For equivalent regional tools, refer to Special Tools : Diagnostic Tools .

© Copyright Chevrolet. All rights reserved

Camshaft Position Actuator Solenoid Valve Replacement - Exhaust

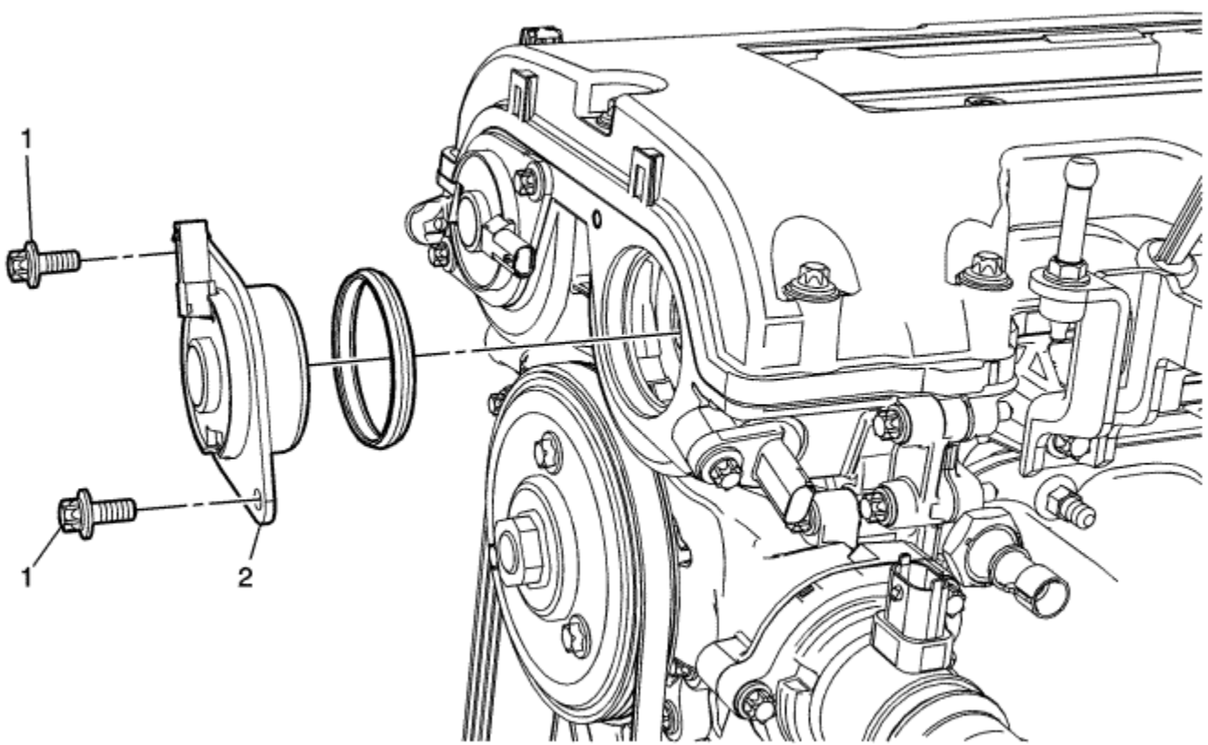

Callout	Component Name
Preliminary Procedure Remove the air cleaner assembly. Refer to Air Cleaner Assembly Replacement .	
	Camshaft Position Actuator Solenoid Valve Fastener (Qty: 2)

1	**Caution:** Refer to Fastener Caution in the Preface section. **Tighten** 8 N·m (71 lb in)
2	Camshaft Position Actuator Solenoid Valve **Procedure** Disconnect the electrical connector.

© Copyright Chevrolet. All rights reserved

Camshaft Position Actuator Solenoid Valve Replacement - Intake

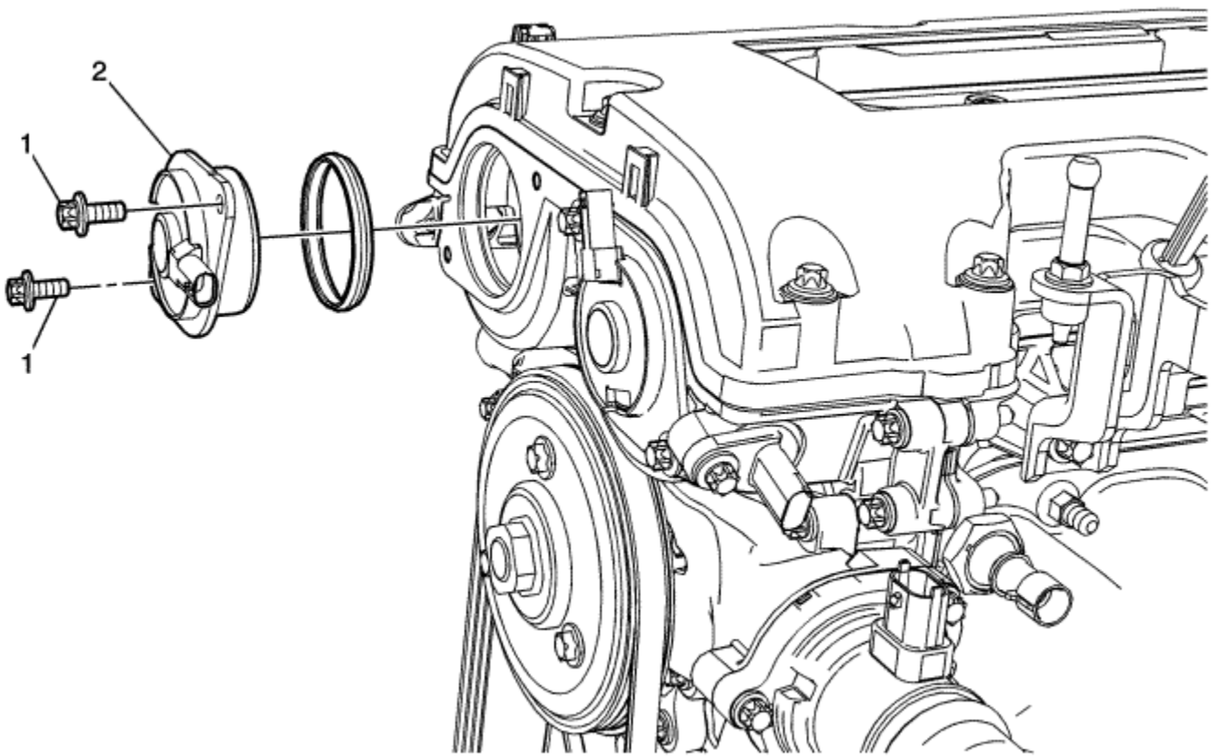

Callout	Component Name
	Preliminary Procedure **Remove the air cleaner assembly. Refer to Air Cleaner Assembly Replacement .**
	Camshaft Position Actuator Solenoid Valve Fastener (Qty: 2)

1	**Caution:** Refer to Fastener Caution in the Preface section. **Tighten** 8 N·m (71 lb in)
2	Camshaft Position Actuator Solenoid Valve **Procedure** Disconnect the electrical connector.

© Copyright Chevrolet. All rights reserved

Crankshaft Position Sensor Replacement

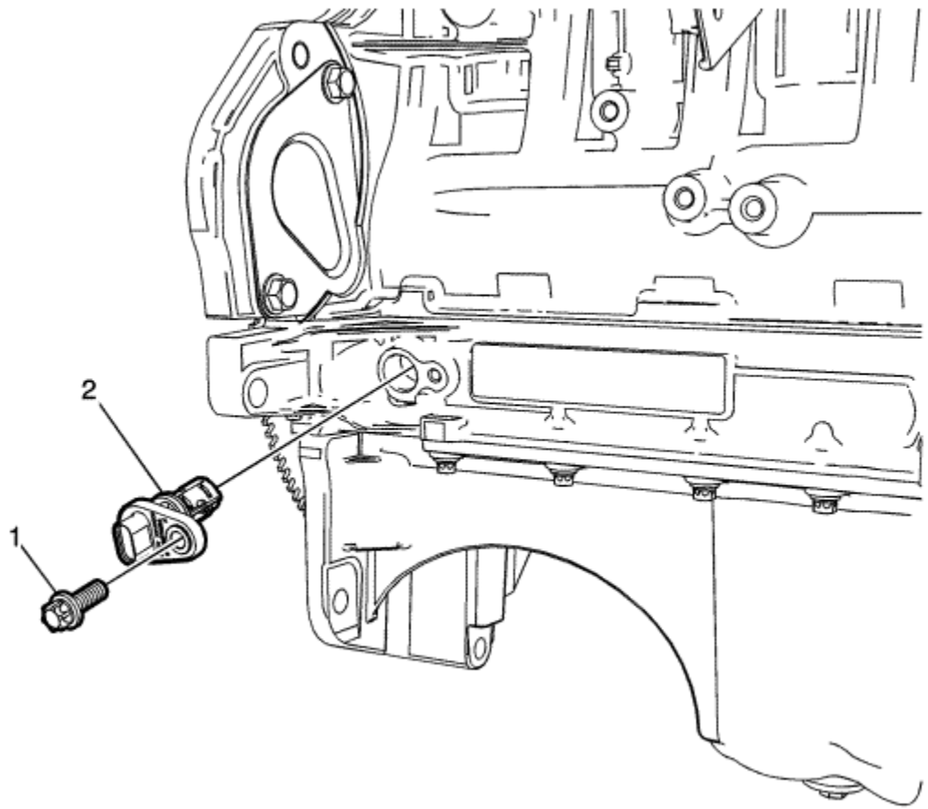

Callout	Component Name

Danger: Do not use a service jack in locations other than those specified to lift this vehicle. Lifting the vehicle with a jack in those other locations could cause the vehicle to slip off the jack and roll; this could cause injury or death.

Preliminary Procedure

Raise and support the vehicle. Refer to Lifting and Jacking the Vehicle .	
1	Crankshaft Position Sensor Fastener **Caution:** Refer to Fastener Caution in the Preface section. **Tighten** 8 N·m (71 lb in)
2	Crankshaft Position Sensor **Procedure** 1. Perform the crank variation learn procedure. Refer to Crankshaft Position System Variation Learn . 2. Disconnect the electrical connector.

© Copyright Chevrolet. All rights reserved

Camshaft Position Sensor Replacement - Exhaust

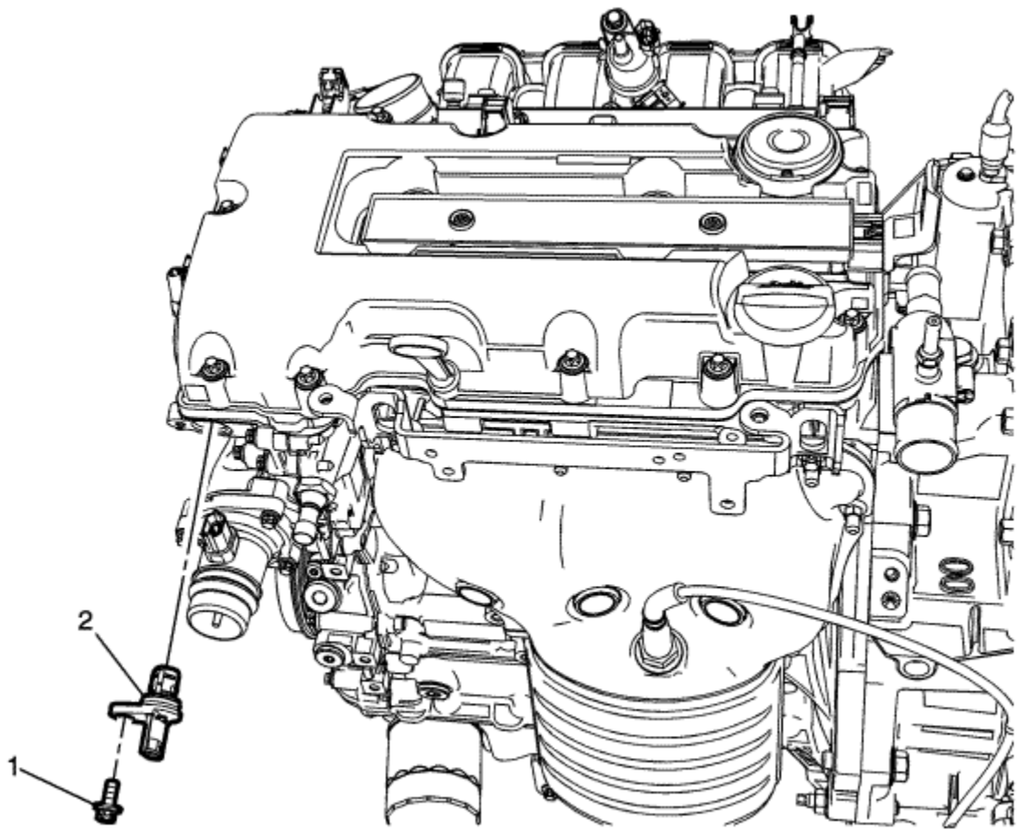

Callout	Component Name
Preliminary Procedure Remove the air cleaner assembly. Refer to Air Cleaner Assembly Replacement .	
	Camshaft Position Sensor Fastener

1	**Caution:** Refer to Fastener Caution in the Preface section. **Tighten** 8 N·m (71 lb in)
2	Camshaft Position Sensor **Procedure** Disconnect the electrical connector.

© Copyright Chevrolet. All rights reserved

Camshaft Position Sensor Replacement - Intake

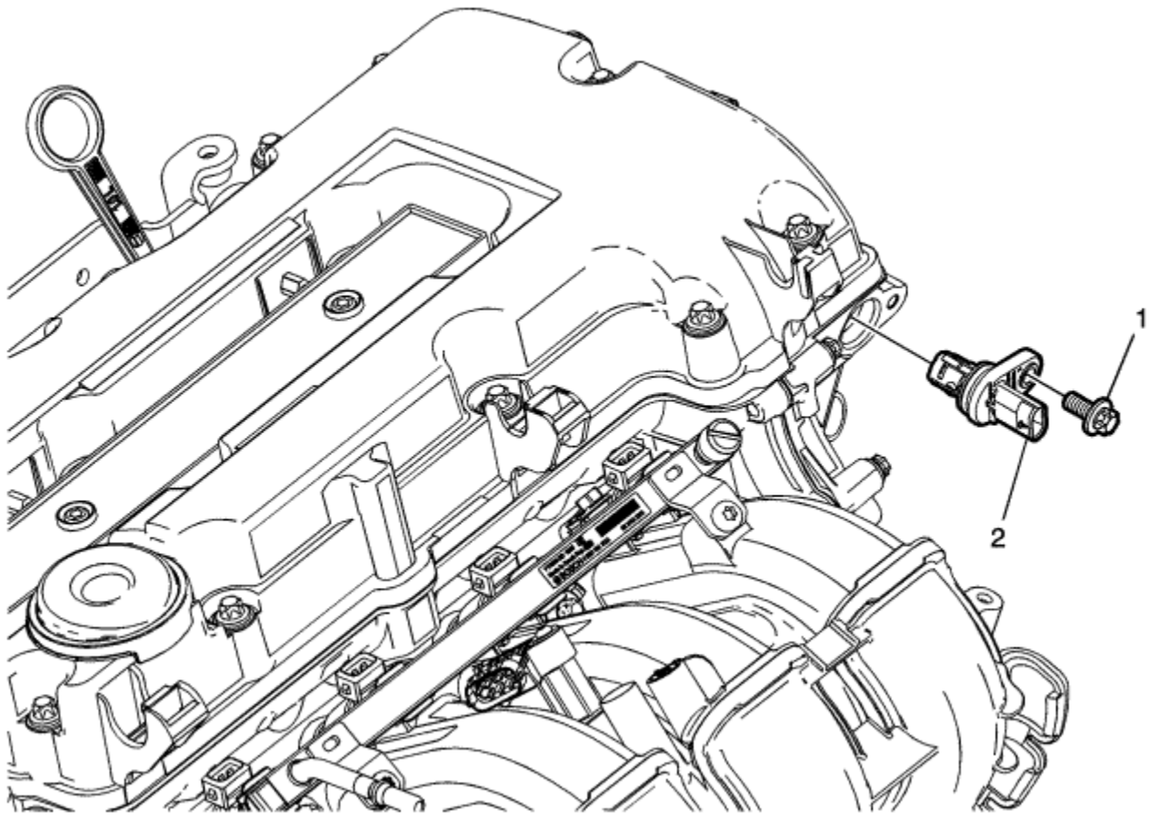

Callout	Component Name
Preliminary Procedure **Remove the air cleaner resonator duct. Refer to Air Cleaner Resonator Outlet Duct Replacement .**	
	Camshaft Position Sensor Fastener

1	**Caution:** Refer to Fastener Caution in the Preface section. **Tighten** 8 N·m (71 lb in)
2	Camshaft Position Sensor **Procedure** Disconnect the electrical connector.

© Copyright Chevrolet. All rights reserved

Knock Sensor Replacement

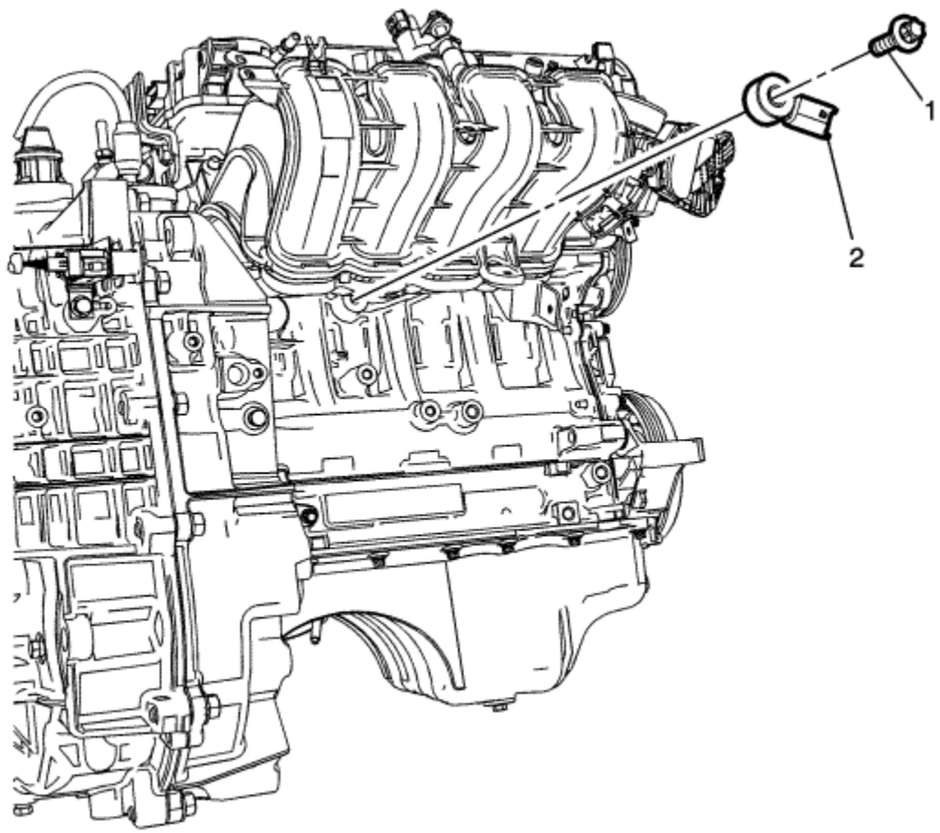

Callout	Component Name

Danger: Do not use a service jack in locations other than those specified to lift this vehicle. Lifting the vehicle with a jack in those other locations could cause the vehicle to slip off the jack and roll; this could cause injury or death.

Preliminary Procedure

Raise and support the vehicle. Refer to Lifting and Jacking the Vehicle .	
1	Knock Sensor Fastener **Caution:** Refer to Fastener Caution in the Preface section. **Tighten** 20 N·m (15 lb ft)
2	Knock Sensor **Procedure** Disconnect the electrical connector.

© Copyright Chevrolet. All rights reserved

Air Cleaner Outlet Duct Replacement

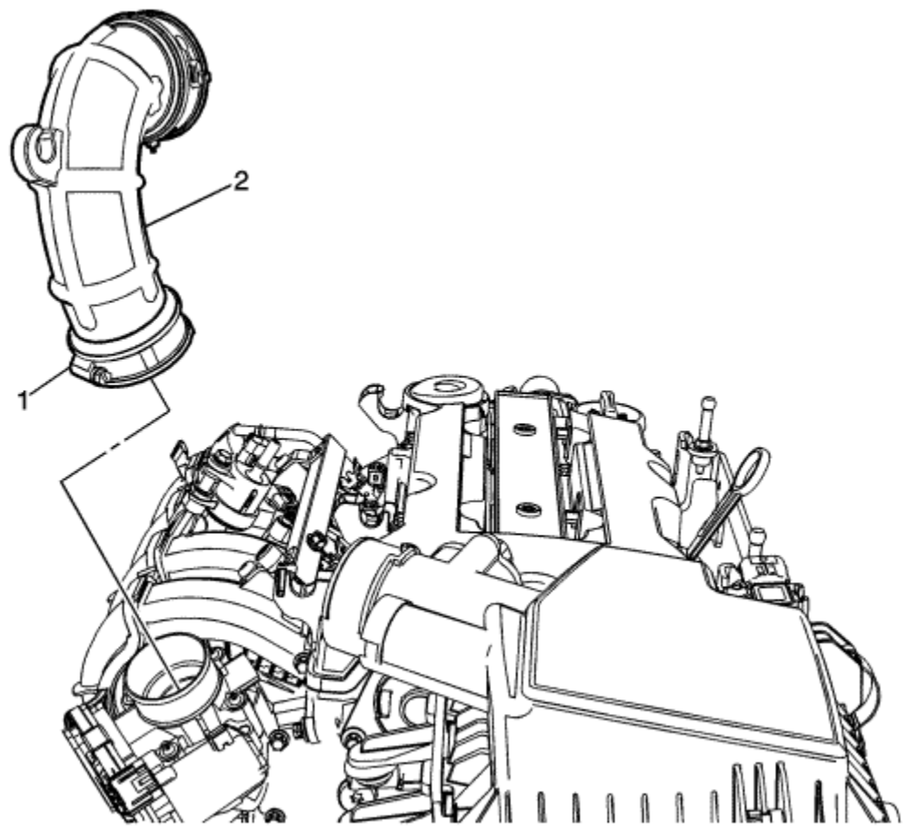

Callout	Component Name
Preliminary Procedure Remove the air cleaner resonator. Refer to Air Cleaner Resonator Outlet Duct Replacement .	
1	Air Cleaner Outlet Duct Clamp

	Caution: Refer to Fastener Caution in the Preface section.
2	Air Cleaner Outlet Duct

© Copyright Chevrolet. All rights reserved

Air Cleaner Resonator Outlet Duct Replacement

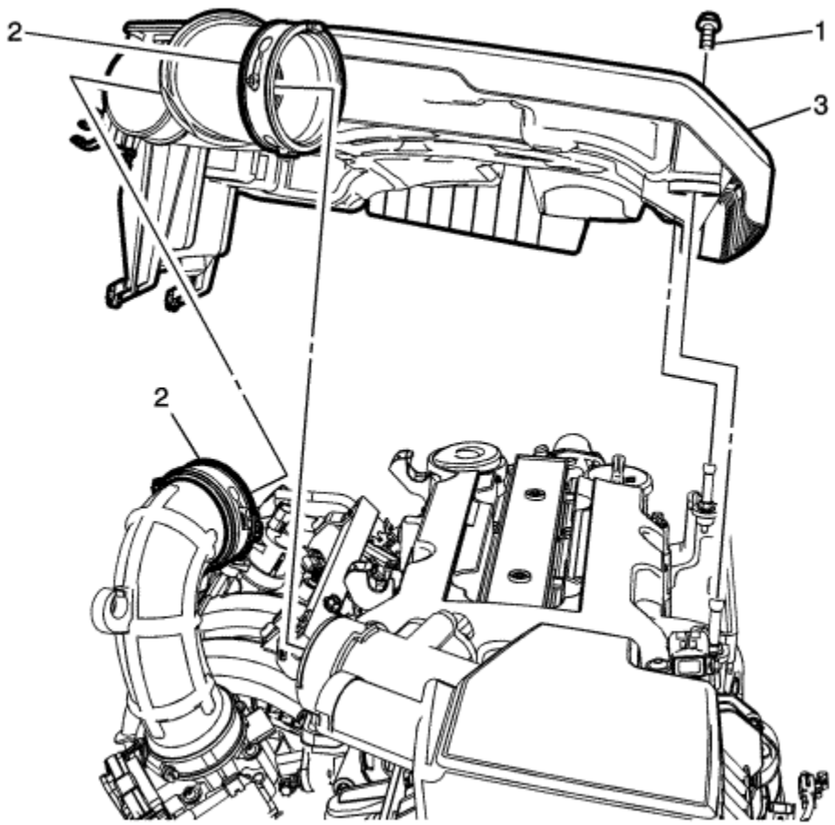

Callout	Component Name
Preliminary Procedure Remove the oil level indicator.	
	Air Cleaner Resonator Outlet Duct Fastener (Qty: 2)

1	**Caution:** Refer to Fastener Caution in the Preface section. **Tighten** 9 N·m (80 lb in)
2	Air Cleaner Resonator Outlet Duct Clamp (Qty: 2)
3	Air Cleaner Resonator Outlet Duct

© Copyright Chevrolet. All rights reserved

Air Cleaner Element Replacement

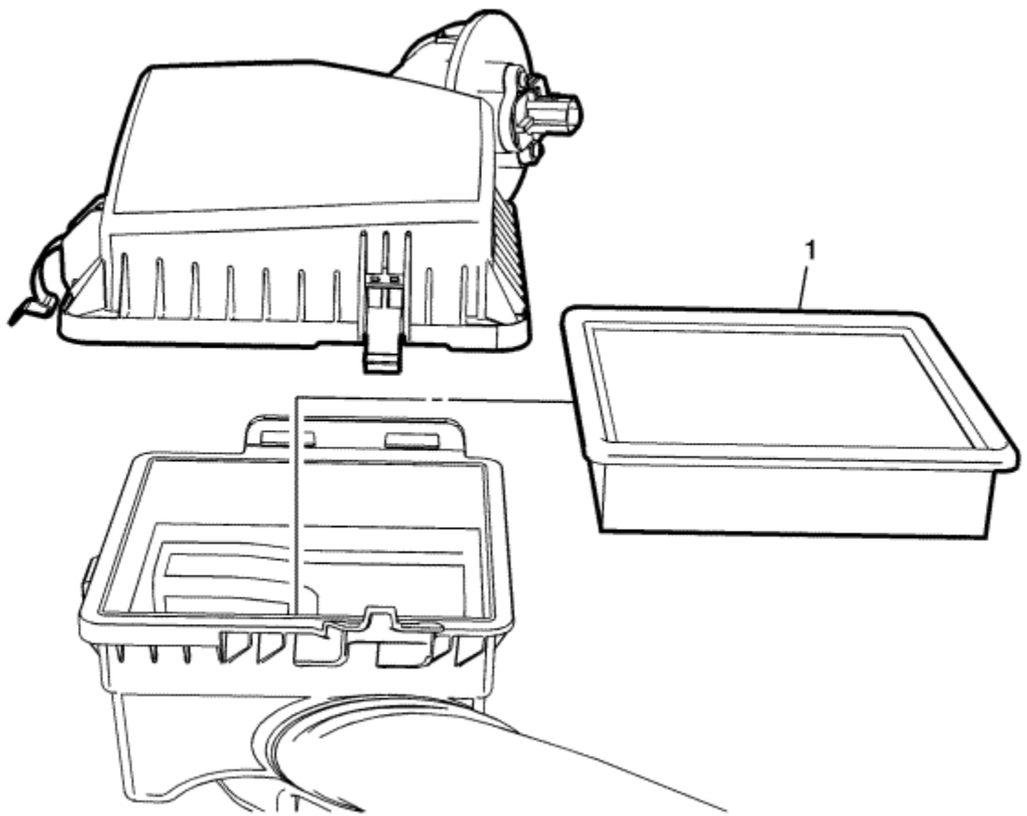

Callout	Component Name
Preliminary Procedure Disconnect the air cleaner resonator duct from the air cleaner. Refer to Air Cleaner Resonator Outlet Duct Replacement .	
	Air Cleaner Element

1	**Procedure** 1. Disconnect the mass airflow electrical connector. 2. Release the retaining tabs.

© Copyright Chevrolet. All rights reserved

Air Cleaner Assembly Replacement

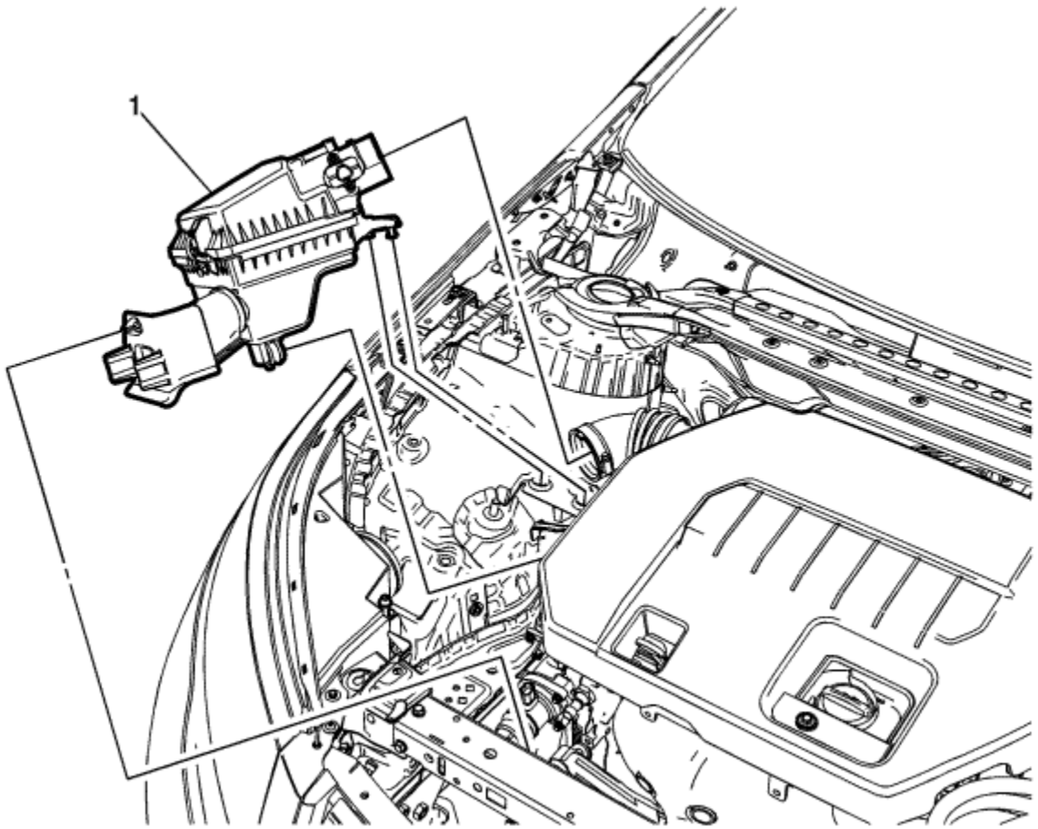

Callout	Component Name
Preliminary Procedure Disconnect the air cleaner resonator duct from the air cleaner assembly. Refer to Air Cleaner Resonator Outlet Duct Replacement .	
	Air Cleaner Assembly

1	**Note:** Ensure lower flap of Air Inlet Tube is positioned between Wiring Harness and CRFM, the Flap should not overlap harness. Squeezing the air inlet tube (squeezing the lower flap upward) during install, the flap will clear the harness and fall into the correct location when the upper retainer is secured. **Procedure** 1. Disconnect the electrical connectors. 2. Transfer parts as necessary.

© Copyright Chevrolet. All rights reserved

Camshaft Actuator System Description

Camshaft Position (CMP) Actuator System

The camshaft position (CMP) actuator system is an electro-hydraulic operated device used for a variety of engine performance and operational enhancements. These enhancements include lower emission output through exhaust gas dilution of the intake charge in the combustion chamber, a broader engine torque range, and improved fuel economy. The CMP actuator system accomplishes this by changing the angle or timing of the camshaft relative to the crankshaft position. The CMP actuator simply allows earlier or later intake and exhaust valve opening during the four stroke engine cycle. The CMP actuator cannot vary the duration of valve opening, or the valve lift.

During engine OFF, engine idling conditions, and engine shutdown, the camshaft actuator is held in the Park position. Internal to the CMP actuator assembly is a return spring and a locking pin. During non-phasing modes of the camshaft, the return spring rotates the camshaft back to the Park position, and the locking pin retains the CMP actuator sprocket to the camshaft.

CMP Actuator System Operation

The camshaft position (CMP) actuator system is controlled by the engine control module (ECM). The ECM sends a signal to a CMP actuator solenoid in order to control the amount of engine oil flow to a Cam Actuator passage. The pressurised engine oil is sent to unseat the locking pin, and to the vane and rotor assembly of the CMP actuator. There are 2 different passages for oil to flow through, a passage for cam advance and a passage for cam retard. The Cam Actuator is attached to a camshaft and is hydraulically operated in order to change the angle of the camshaft relative to crankshaft position (CKP). Engine oil pressure (EOP), viscosity, temperature and engine oil level can have an adverse affect on Cam Actuator performance.

© Copyright Chevrolet. All rights reserved

Electronic Ignition System Description

Electronic Ignition System Operation

The electronic ignition system produces and controls the high energy secondary spark. This spark ignites the compressed air/fuel mixture at precisely the correct time, providing optimal performance, fuel economy, and control of exhaust emissions. The engine control module (ECM) collects information from the crankshaft position sensor, and the inlet and exhaust camshaft position sensors to determine the sequence, dwell, and timing of the spark for each cylinder. The ECM transmits a frequency signal to the ignition coil assembly on the appropriate ignition control circuit to fire the spark plugs.

Crankshaft Position Sensor

The crankshaft position sensor is an externally magnetically biased digital output integrated circuit sensing device. The sensor provides a pulse for each magnetic pole of the encoder wheel on the crankshaft. The sensor produces an ON/OFF DC voltage of varying frequency, with 58 output pulses per crankshaft revolution. The frequency of the sensor output depends on the velocity of the crankshaft. The ECM uses sensor signal pulse to determine crankshaft speed and position to calculate the best timing for ignition and fuel injection. The ECM also uses crankshaft position sensor information to control camshaft phasing, and to detect cylinder misfire.

The crankshaft position sensor is connected to the engine control module by the circuits listed below:

- A 5 V reference circuit
- A low reference circuit
- A signal circuit

Crankshaft Encoder Wheel

The crankshaft encoder wheel is part of the crankshaft. The encoder wheel consists of 58 tooth and a reference gap. Each tooth on the encoder wheel is spaced 6° apart with a 12° space for the reference gap. The pulse from the reference gap is known as the sync pulse. The sync pulse is used to synchronize the ignition coil module firing sequence with the crankshaft position, while the other tooth provides cylinder location during a revolution.

Camshaft Position Sensors

The inlet and exhaust camshaft position sensors are each triggered by a notched reluctor wheel built onto the camshaft sprockets. The four signal pulses every camshaft revolution. Each notch is a different size which is used to identify the compression stroke of each cylinder and to enable sequential fuel injection. The camshaft position sensors are connected to the ECM by the circuits listed below:

- A 5 V reference circuit
- A low reference circuit
- A signal circuit

Ignition Coil Assembly

The ignition coil assembly integrates the 4 coils and the ignition control module within a single sealed component.

The ignition coil assembly has the following circuits:

- An ignition voltage circuit
- A ground
- A low reference circuit
- 4 ignition coil control circuits

The ECM controls the individual coils by transmitting timing pulses on the ignition coil circuit of each ignition coil to enable a spark event.

The spark plugs are connected to each coil by a short boot. The boot contains a spring that conducts the spark energy from the coil to the spark plug. The spark plug electrode is coated with platinum for long wear and higher efficiency.

Engine Control Module [ECM]

The ECM controls all ignition system functions, and constantly adjusts the spark timing. The ECM monitors information from various sensor inputs that include the following:

- The crankshaft position sensor
- The accelerator pedal position (APP)
- The manifold absolute pressure (MAP) sensor
- The inlet air temperature (IAT) sensor
- The vehicle speed sensor (VSS)
- The engine knock sensor
- The engine coolant temperature (ECT) sensor
- The mass airflow (MAF) sensor
- The camshaft position sensors

&#169© Copyright Chevrolet. All rights reserved

Engine Control Module Description

The Engine Control Module (ECM) interacts with many emission related components and systems, and monitors emission related components and systems for deterioration. OBD II diagnostics monitor the system performance and a diagnostic trouble code (DTC) sets if the system performance degrades. The ECM is part of a network and communicates with various other vehicle control modules.

Malfunction indicator lamp (MIL) operation and DTC storage are dictated by the DTC type. A DTC is ranked as a Type A or Type B if the DTC is emissions related. Type C is a non-emissions related DTC.

The ECM is the control centre of the engine controls system. Review the components and wiring diagrams in order to determine which systems are controlled by the ECM.

The ECM constantly monitors the information from various sensors and other inputs, and controls the systems that affect engine performance and emissions. The ECM also performs diagnostic tests on various parts of the system and can turn on the MIL when it recognises an operational problem that affects emissions. When the ECM detects a malfunction, the ECM stores a DTC. The condition area is identified by the particular DTC that is set. This aids the technician in making repairs.

ECM Function

The ECM can supply 5 V or 12 V to various sensors or switches. This is done through pull-up resistors to regulated power supplies within the ECM. In some cases, even an ordinary shop voltmeter will not give an accurate reading due to low input resistance. Therefore, a digital multimeter (DMM) with at least 10 mega ohms input impedance is required in order to ensure accurate voltage readings.

The ECM controls the output circuits by controlling the ground or the power feed circuit through transistors or a device called an output driver module.

EEPROM

The electronically erasable programmable read only memory (EEPROM) is an integral part of the ECM. The EEPROM contains program and calibration information that the ECM needs in order to control engine operation.

Special equipment, as well as the correct program and calibration for the vehicle, are required in order to reprogram the ECM.

Data Link Connector (DLC)

The data link connector (DLC) provides serial data communication for ECM diagnosis. This connector allows the technician to use a scan tool in order to monitor various serial data parameters and display DTC information. The DLC is located inside the driver's compartment, underneath the dash.

Malfunction Indicator Lamp (MIL)

The malfunction indicator lamp (MIL) is inside the instrument panel cluster (IPC). The MIL is controlled by the ECM and illuminates when the ECM detects a condition that affects vehicle emissions.

ECM Service Precautions

The ECM, by design, can withstand normal current draws that are associated with vehicle operations. However, care must be used in order to avoid overloading any of these circuits. When testing for opens or shorts, do not ground or apply voltage to any of the ECM circuits unless the diagnostic procedure instructs you to do so. These circuits should only be tested with a DMM unless the diagnostic procedure instructs otherwise.

Emissions Diagnosis For State I/M Programs

This OBD II equipped vehicle is designed to diagnose any conditions that could lead to excessive levels of the following emissions:

- Hydrocarbons (HC)
- Carbon monoxide (CO)
- Oxides of nitrogen (NOx)
- Evaporative emission (EVAP) system losses

Should this vehicle's on-board diagnostic system (ECM) detect a condition that could result in excessive emissions, the ECM turns ON the MIL and stores a DTC that is associated with the condition.

Aftermarket (Add-On) Electrical And Vacuum Equipment

Caution: Do not attach add-on vacuum operated equipment to this vehicle. The use of add-on vacuum equipment may result in damage to vehicle components or systems.

Caution: Connect any add-on electrically operated equipment to the vehicle's electrical system at the 12 V battery (power and ground) in order to prevent damage to the vehicle.

Aftermarket, add-on, electrical and vacuum equipment is defined as any equipment installed on a vehicle after leaving the factory that connects to the vehicle's electrical or vacuum systems. No allowances have been made in the vehicle design for this type of equipment.

Add-on electrical equipment, even when installed to these strict guidelines, may still cause the powertrain system to malfunction. This may also include equipment not connected to the vehicle electrical system, such as portable telephones and radios. Therefore, the first step in diagnosing any powertrain condition is to eliminate all of the aftermarket electrical equipment from the vehicle. After this is done, if the problem still exists, the problem may be diagnosed in the normal manner.

Electrostatic Discharge (ESD) Damage

Note: In order to prevent possible electrostatic discharge damage to the ECM, DO NOT touch the connector pins on the ECM.

The electronic components that are used in the control systems are often designed to carry very low voltage. These electronic components are susceptible to damage caused by electrostatic discharge. Less than 100 V of static electricity can cause damage to some electronic components. By comparison, it takes as much as 4,000 V for a person to even feel a static discharge.

There are several ways for a person to become statically charged. The most common methods of charging are by friction and by induction. An example of charging by friction is a person sliding across a car seat.

Charging by induction occurs when a person with well insulated shoes stands near a highly charged object and momentarily touches ground. Charges of the same polarity are drained off leaving the person highly charged with the opposite polarity. Static charges can cause damage, therefore, it is important to use care when handling and testing electronic components.

Emissions Control Information Label

The under bonnet Vehicle Emissions Control Information Label contains important emission specifications. This identifies the year, the displacement of the engine in litres, and the class of the vehicle.

This label is located in the engine compartment of every General Motors vehicle. If the label has been removed, it can be ordered from GM service parts operations (GMSPO).

&#169© Copyright Chevrolet. All rights reserved

Engine Maintenance and Fuel Monitor Description

Maintenance Mode Description

The maintenance modes are automated engine run cycles performed to mitigate the potential adverse affects to internal combustion engine (ICE) components due to limited or no engine run time. The engine control module (ECM) monitors ICE run time and fuel age and invokes the engine maintenance mode or the fuel maintenance mode when the threshold criteria is exceeded. Limited engine run time can result in component degradation, combustion by-product (water/fuel) accumulation in engine oil, and stale petrol which can lead to the following conditions:

- Insufficient engine lubrication
- Flat spots in bearings
- Water pump belt damage
- Fuel pump failure
- Blocked/restricted fuel injectors
- Rough engine operation due to stale fuel

The maintenance modes are also necessary to exercise emissions related equipment and to reduce the possibility of ICE no-start conditions. The ICE must start every time to prevent the vehicle occupants from being stranded.

Operation

Engine Maintenance Mode

The engine maintenance mode will run every 42 days if the ECM determines that the ICE run time has not been sufficient enough to purge the contaminants from the engine oil. The ECM commands the ICE to run for a contaminant burn-off time of at least 30 s after the engine coolant temperature (ECT) reaches 65°C (149°F), unless cold starts have been experienced since the last engine maintenance mode event. Between 15-90 s are added to the required contaminant burn-off time each time all of the following cold start criteria are met:

- ECT and inlet air temperature (IAT) are within 8°C (14°F) at engine start up.
- ECT and IAT are less than 20°C (68°F) at engine start up.
- ECT does not exceed 65°C (149°F) during the run cycle.

If an ECT or IAT sensor fault is present at an initial ignition cycle engine run event, a default time will be added to the required contaminant burn-off time.

The ICE runs continuously while the engine maintenance mode is active.

At power down, ICE run time duration above 65°C (149°F) ECT, is subtracted from the required contaminant burn-off time.

The engine maintenance mode timer (days since engine run) is reset to 0 when the required contaminant burn-off time is complete.

Fuel Maintenance Mode

When the ECM determines that the fuel age is greater than 365 days, the ICE will run until the fuel level is less than 1/3 tank. The ICE will cycle ON and OFF and will run as efficiently as possible while the fuel maintenance mode is active.

&#169© Copyright Chevrolet. All rights reserved

Evaporative Emission Control System Description

Typical Evaporative Emission (EVAP) System Hose Routing Diagram

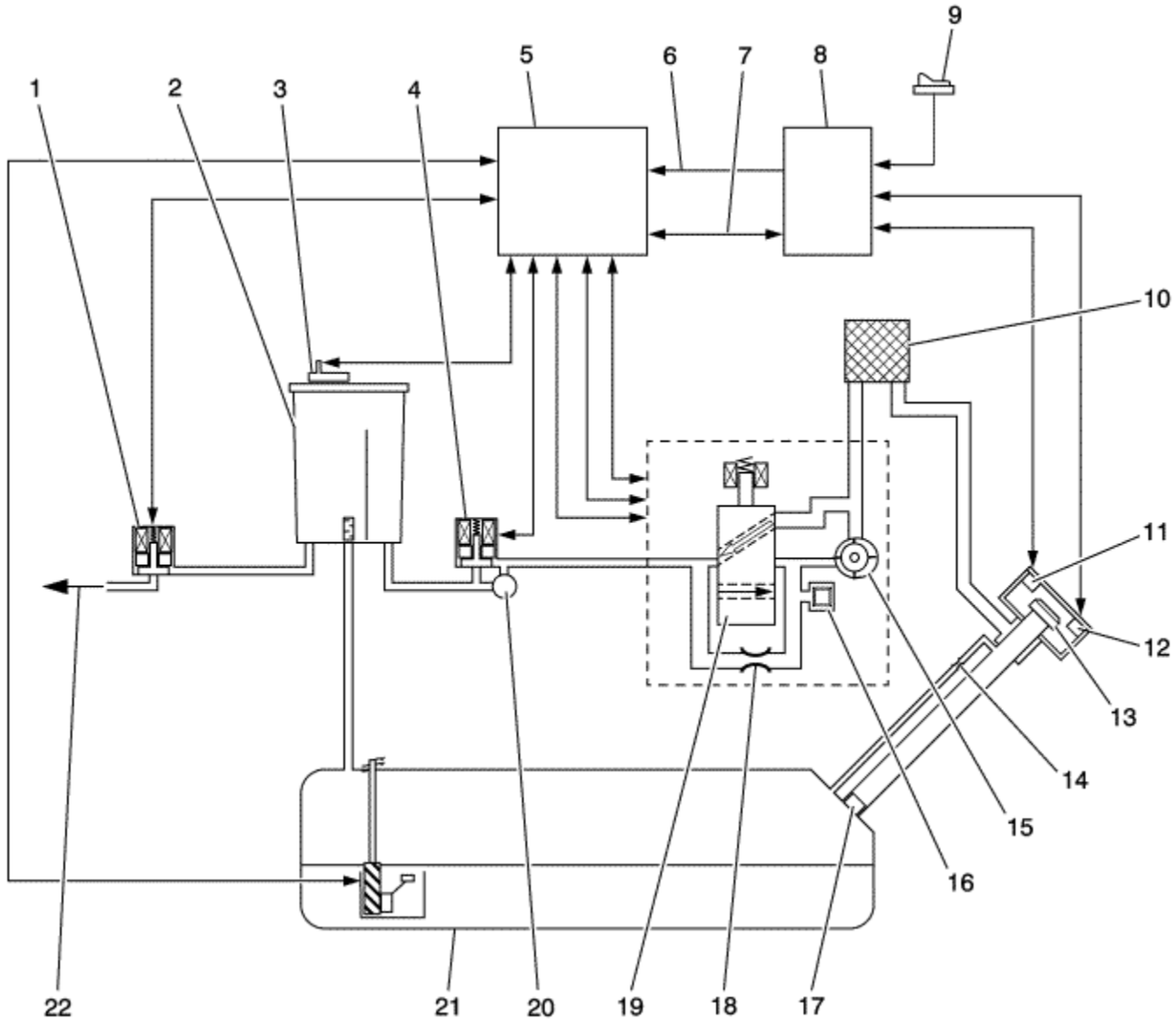

(1) Evaporative Emissions (EVAP) Purge Solenoid Valve
(2) EVAP Canister
(3) Fuel Tank Pressure Sensor
(4) EVAP Vent Solenoid Valve
(5) Engine Control Module (ECM)
(6) Accessory Wake-up Line
(7) Serial Data Communication

(8) Hybrid Powertrain Control Module 2 with Alarm Clock
(9) Refuel Request Switch
(10) Fresh Air Filter
(11) Fuel Fill Door Lock Solenoid
(12) Fuel Fill Door Position Sensor
(13) Fuel Filler Cap
(14) 2.54 mm (0.100 in) Orifice in Fuel Fill Vapor Recirculation Pipe
(15) EVAP Leak Detection Pump
(16) EVAP Leak Detection Pump Sensor
(17) Fuel Fill Pipe Inlet Check Valve
(18) EVAP Leak Detection Pump Reference Orifice 0.51 mm (0.020 in)
(19) EVAP Leak Detection Pump Switching Valve
(20) Relief Valve
(21) Fuel Tank
(22) To Engine Inlet Manifold Vacuum

EVAP System Operation

The evaporative emission (EVAP) control system limits fuel vapours from escaping into the atmosphere. Fuel tank vapours are allowed to move from the fuel tank, due to pressure in the tank, through the EVAP vapour tube, into the EVAP canister. Carbon in the canister adsorbs and stores the fuel vapors. The EVAP canister stores the fuel vapors until the engine is able to use them.

This vehicles sealed fuel system features a normally sealed fuel tank and canister to reduce canister loading during daily cycles. Different than the EVAP diagnostic hardware from conventional EVAP systems this vent solenoid valve is normally closed. This keeps the fuel vapor sealed in the fuel tank and canister. The vent solenoid valve is only open for canister purge, refueling, fuel tank pressure (FTP) sensor correlation or leak check with the EVAP leak detection pump. Additional, excessive pressure is vented through the vent hose and EVAP canister vent solenoid valve to the atmosphere at a predetermined limit. Diagnostics are performed with the propulsion system ON and OFF.

Propulsion System OFF

The engine control module (ECM) wake-up timer, which is located in the Hybrid Powertrain Control Module 2, activates the ECM at three predetermined times so that leak detection can occur. This is where the EVAP leak detection pump hardware is used. The ECM uses several tests to determine if the EVAP system is leaking or restricted. These tests execute with the engine OFF at 5, 7, or 9.5 hours after the vehicle has been shut OFF. These soak times allow the fuel temperature and pressure to stabilised.

Propulsion System ON

EVAP purge flow, FTP sensor and EVAP leak detection pump sensor performance diagnostics are conducted.

Purge Solenoid Valve Leak Test

This vehicle does not have a purge solenoid leak test. A leaking purge solenoid will set DTCs P0442 or P0455.

Large Leak Test

This vehicle does not have a engine running version of the large leak diagnostic. The large leak diagnostic only runs when the propulsion system is not active. This is accomplished by using the EVAP leak detection pump hardware and a prior refuelling event was detected.

Small Leak Test

This vehicle does not use the engine OFF natural vacuum diagnostic for small leak detection. Instead it uses the EVAP leak detection pump hardware. This test executes when the propulsion is not active at 5, 7, or 9.5 hours after the vehicle has been shut OFF.

EVAP System Components

The EVAP system consists of the following components:

EVAP Purge Solenoid Valve

The EVAP purge solenoid valve controls the flow of vapours from the EVAP system to the inlet manifold. The purge solenoid valve opens when commanded ON by the ECM. This normally closed valve is pulse width modulated (PWM) by the ECM to precisely control the flow of fuel vapor to the engine. This valve will also be opened during some portions of the EVAP testing when the engine is running, allowing engine vacuum to enter the EVAP system.

EVAP Canister

The canister is filled with carbon pellets used to adsorb and store fuel vapors. Fuel vapor is stored in the canister until the ECM determines that the vapor can be consumed in the normal combustion process.

Fuel Tank Pressure Sensor

The FTP sensor measures the difference between the pressure or vacuum in the fuel tank and outside air pressure. The ECM provides 5 V reference, ground and signal circuit to the FTP sensor. Depending on the vehicle, the sensor can be located in the vapour space on top of the fuel tank, in the vapour tube between the canister and the tank, or on the EVAP canister. The FTP sensor provides a signal voltage back to the ECM that can vary between 0.15-4.85 V. A high FTP sensor voltage indicates a fuel tank pressure. A low FTP sensor voltage indicates a fuel tank vacuum.

EVAP Vent Solenoid Valve

The EVAP vent solenoid valve controls fresh airflow into the EVAP canister. The EVAP vent solenoid valve is normally closed. This keeps vent fuel vapor sealed in the fuel tank and canister. The EVAP vent solenoid valve is similar to a conventional vent valve, but a conventional vent valve is normally open. This vent solenoid valve is only open for canister purge, refuelling, fuel tank pressure sensor correlation or leak check with the EVAP leak detection pump.

Relief Valve

This is a mechanical pressure relieve valve that is part of the vent solenoid valve assembly. It protects the fuel tank by relieving excessive pressure or excessive vacuum that could build up in the sealed fuel tank from environmental changes.

EVAP Leak Detection Pump Assembly

The leak detection pump assembly consists of three main components. These components are integral parts of the EVAP leak detection pump assembly and are not serviceable.

- EVAP leak detection pump with reference orifice
- EVAP leak detection pump switching valve
- EVAP leak detection pump pressure sensor

This leak detection pump assembly is used for FTP sensor correlation and leak checking the EVAP system for small and large system leaks.

- EVAP leak detection pump pressure sensor's primary purpose is to perform leak detection diagnostics. The sensor itself is diagnosed by a correlation to barometric pressure based off the MAP sensor.
- EVAP leak detection pump 0.51mm (0.020 in) reference orifice, working in conjunction with the EVAP leak detection pump and pressure sensor. This orifice is used to establish a vacuum reference baseline for diagnosing EVAP leaks
- EVAP leak detection pump switching valve switches from a vent position to a pump position depending on the EVAP diagnostics taking place.

Fresh Air Filter

An in-line 5 micron air filter exists between the EVAP leak detection pump fresh air inlet and behind the fuel tank fill door pocket to keep the pump hardware from becoming contaminated.

Vapour Recirculation Tube

A vapor path between the fuel fill pipe and the fuel tank is necessary to fully diagnose the EVAP system. It also accommodates service diagnostic procedures by allowing the entire EVAP system to be diagnosed from the either end of the system.

2.54mm (0.100 in) Orifice in Fuel Fill Vapor Recirculation Pipe

The orifice aids refuelling, onboard refueling vapor recovery (ORVR), to avoid canister overload while still allowing closed system leak detection and compliance with ORVR emissions standards.

Fuel Fill Door Lock Solenoid

Prevents fuel fill door opening prior to pressing the Refuel Request Switch.

Fuel Fill Door Position Switch

Provides input to the Hybrid Powertrain Control Module 2 to determine if the door position is open or closed.

Fuel Fill Cap

The fuel fill cap is equipped with a seal and has no relief valve.

Fuel Fill Pipe Check Valve

The check valve on the fuel fill pipe prevents spit-back during refuelling.

Refuel Request Switch

Note: There is a 30 minute time frame for refuelling to occur. If testing the EVAP system the vent solenoid valve will go back to it's normal closed state after 30 min.

Note: If more time is needed a second 1 second press of the switch will be required. Or use the scan tool to command the vent solenoid open, if necessary, for additional testing.

Located in the driver's door panel, this switch when pressed for 1 second, puts the EVAP diagnostics into an abort state, opens the vent solenoid valve for refuelling and releases the fuel fill door. A message will be displayed on the driver information centre. There is a 30 second timer on the door release mechanism allowing sufficient time to press on the fuel door to open it. If 30 seconds lapses before the fuel door is opened a second press of the refuel request switch will be required.

&#169© Copyright Chevrolet. All rights reserved

Fuel System Description

Fuel System Overview

The fuel system is an electronic returnless on-demand design. The returnless fuel system reduces the internal temperature of the fuel tank by not returning hot fuel from the engine to the fuel tank. Reducing the internal temperature of the fuel tank results in lower evaporative emissions.

An electric turbine style fuel pump attaches to the fuel tank fuel pump module inside the fuel tank. The fuel pump supplies high pressure fuel through the fuel feed pipe to the fuel injection system. The fuel tank fuel pump module contains a reverse flow check valve. The check valve maintains fuel pressure in the fuel feed pipe and the fuel rail in order to enable quick engine starts.

Electronic Returnless Fuel System

The electronic returnless fuel system is a microprocessor controlled fuel delivery system which transports fuel from the tank to the fuel rail. It functions as an electronic replacement for a traditional, mechanical fuel pressure regulator. The pressure relief regulator valve within the fuel tank provides an added measure of over-pressure protection. Desired fuel pressure is commanded by the engine control module (ECM), and transmitted to the fuel pump control module via a GMLAN serial data message. A fuel pressure sensor located on the fuel feed pipe provides the feedback the fuel pump control module requires for Closed Loop fuel pressure control.

Fuel Pump Control Module

The fuel pump control module is a serviceable GMLAN module. The fuel pump control module receives the desired fuel pressure message from the ECM and controls the fuel pump located within the fuel tank to achieve the desired fuel pressure. The fuel pump control module sends a 25 kHz PWM signal to the fuel pump, and pump speed is changed by varying the duty cycle of this signal. Maximum current supplied to the fuel pump is 15 A. A fuel pressure sensor located on the fuel feed pipe provides fuel pressure feedback to the fuel pump control module.

Fuel Pressure Sensor

The fuel pressure sensor is a serviceable 5 V, 3-pin device. It is located on the fuel feed pipe forward of the fuel tank, and receives power and ground from the fuel pump control module through a vehicle wiring harness. The sensor provides a fuel pressure signal to the fuel pump control module, which is used to provide Closed Loop fuel pressure control.

Fuel Tank

The fuel tank stores the fuel supply. The fuel tank is located in the rear of the vehicle. The fuel tank is held in place by 2 metal straps that are attached to the underbody. The

fuel tank is molded from high-density polyethylene.

Fuel Fill Pipe

The fuel fill pipe has a built-in restrictor in order to prevent refueling with leaded fuel.

Fuel Filler Cap

The fuel fill pipe has a tethered fuel filler cap. A torque-limiting device prevents the cap from being over-tightened. To install the cap, turn the cap clockwise until you hear audible clicks. This indicates that the cap is tightened to the proper torque and fully seated.

Fuel Tank Fuel Pump Module

The fuel tank fuel pump module consists of the following major components:

- The fuel level sensor
- The fuel pump and reservoir assembly
- The fuel filter
- The pressure relief regulator valve

Fuel Level Sensor

The fuel level sensor consists of a float, a wire float arm, and a ceramic resistor card. The position of the float arm indicates the fuel level. The fuel level sensor contains a variable resistor which changes resistance in correspondence with the position of the float arm.

Fuel Pump

The fuel pump is mounted in the fuel tank fuel pump module reservoir. The fuel pump is an electric turbine style pump which pumps fuel to the fuel injection system at a pressure that is based on feedback from the fuel pressure sensor. The fuel pump delivers a constant flow of fuel even during low fuel conditions and aggressive vehicle maneuvers. The fuel pump flex pipe acts to dampen the fuel pulses and noise generated by the fuel pump.

Pressure Relief Regulator Valve

The pressure relief regulator valve replaces the typical fuel pressure regulator used on a mechanical returnless fuel system. The pressure relief regulator valve is closed during normal vehicle operation. The pressure relief regulator valve is used to vent pressure during hot soaks and also functions as a fuel pressure regulator in the event of the fuel pump control module defaulting to 100 percent pulse width modulation (PWM) of the fuel pump. Due to variation in the fuel system pressures, the opening pressure for the pressure relief regulator valve is set higher than the pressure that is used on a mechanical returnless fuel system pressure regulator.

Nylon Fuel Pipes

Nylon pipes are constructed to withstand maximum fuel system pressure, exposure to fuel additives, and changes in temperature.

Heat resistant rubber hose or corrugated plastic conduit protects the sections of the pipes that are exposed to chafing, high temperature, or vibration.

Nylon fuel pipes are somewhat flexible and can be formed around gradual turns under the vehicle. However, if nylon fuel pipes are forced into sharp bends, the pipes kink and restrict the fuel flow. Also, once exposed to fuel, nylon pipes may become stiffer and are more likely to kink if bent too far. Take special care when working on a vehicle with nylon fuel pipes.

Quick-Connect Fittings

Quick-connect fittings provide a simplified means of installing and connecting fuel system components. The fittings consist of a unique female connector and a compatible male pipe end. O-rings, located inside the female connector, provide the fuel seal. Integral locking tabs inside the female connector hold the fittings together.

Fuel Rail Assembly

The fuel rail assembly is attached to the cylinder head. The fuel rail assembly performs the following functions:

- Positions the injectors in the inlet ports of the cylinder head
- Distributes fuel evenly to the injectors

Fuel Injectors

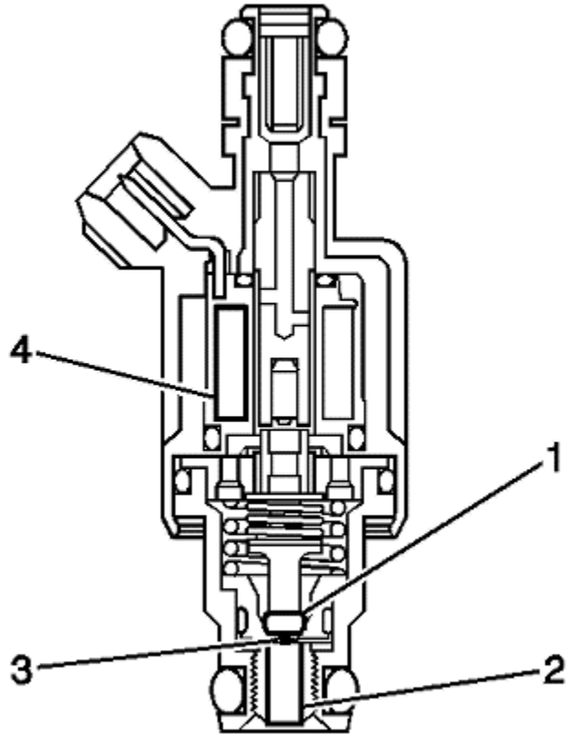

The fuel injector assembly is a solenoid device controlled by the ECM that meters pressurised fuel to a single engine cylinder. The ECM energises the high-impedance, 12 ohms, injector solenoid (4) to open a normally closed ball valve (1). This allows fuel to flow into the top of the injector, past the ball valve, and through a director plate (3) at the injector outlet. The director plate has machined holes that control the fuel flow, generating a spray of finely atomised fuel at the injector tip (2). Fuel from the injector tip is directed at the inlet valve, causing the fuel to become further atomised and vapourised before entering the combustion chamber. This fine atomisation improves fuel economy and emissions.

&#169© Copyright Chevrolet. All rights reserved

Throttle Actuator Control (TAC) System Description

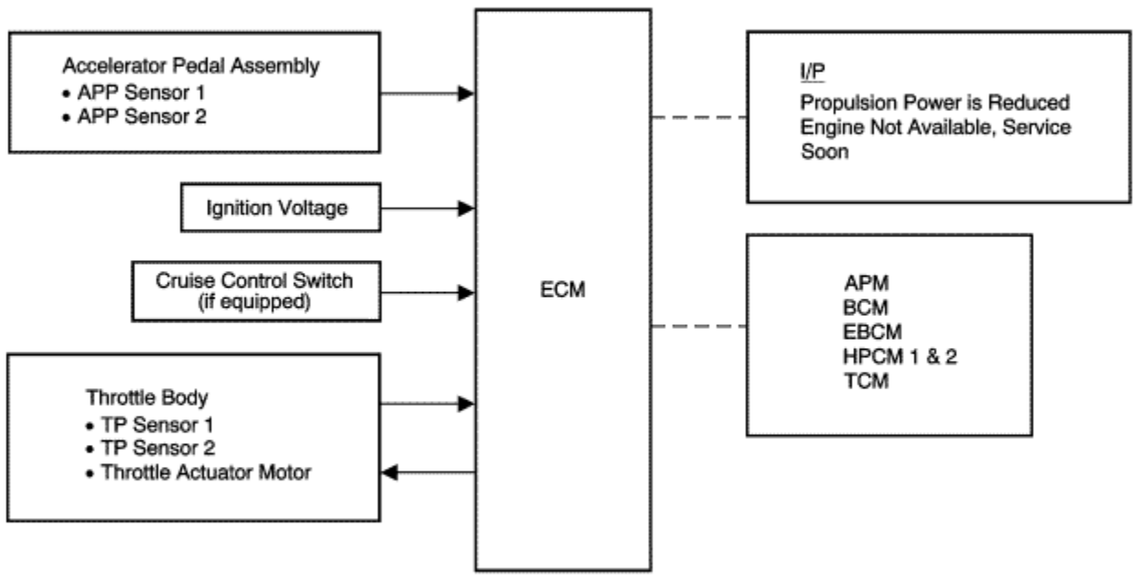

Circuit/System Description

The system torque coordination is provided by the hybrid powertrain control module. The engine control module (ECM) provides the accelerator pedal interface in which the driver requests a vehicle torque. These driver requests are coordinated and arbitrated within the ECM and the final driver requested torque is sent to the hybrid powertrain control module. The hybrid powertrain control module then determines how the torque output will be distributed between the two electric motors and the engine. After the torque distribution has been determined, torque reductions are imposed based upon system interrupts that are listed below:

- Vehicle stability
- Torque security
- Component overheating protection

The final arbitrated values are distributed to the system. Torque coordination of the system depends directly upon the high voltage battery pack state of charge.

This system is a distributed control system where the system torque is controlled over a system network. The system network consists of serial data communications between the controllers listed below:

- Engine control module (ECM)
- Hybrid powertrain control module 1 and 2 (HPCM 1 and 2)
- Transmission control module (TCM)
- Electronic brake control module (EBCM)
- Accessory Power Module (APM)

The hybrid powertrain control module determines the engine speed which is based on the high voltage battery pack state of charge. The ECM achieves throttle positioning by providing a pulse width modulated voltage to the throttle actuator motor. The throttle blade is spring loaded in both directions, and the default position is slightly open.

Modes Of Operation

Normal Mode

During the operation of the TAC system, several modes, or functions, are considered normal. The following modes may be entered during normal operations:

- Minimum pedal value--At Vehicle ON, the ECM updates the learned minimum pedal value.
- Minimum throttle position values--At Vehicle ON, the ECM updates the learned minimum throttle position value. In order to learn the minimum throttle position value, the throttle blade is moved to the closed position.
- Ice break mode--If the throttle blade is not able to reach a predetermined minimum throttle position, the ice break mode is entered. During the ice break mode, the ECM commands the maximum pulse width several times to the throttle actuator motor in the closing direction.
- Battery saver mode--After a predetermined time without engine speed, the ECM commands the battery saver mode. During the battery saver mode, the ECM disables the TAC motor control circuits, which removes the current draw used to maintain the engine speed and allows the throttle to return to the spring loaded default position.

Reduced Power Mode

When the ECM detects a condition with the TAC system, the ECM may enter a propulsion power reduced mode. Propulsion power reduced mode may cause one or more of the following conditions:

- Acceleration limiting--The ECM will continue to use the accelerator pedal for propulsion control, however, the vehicle acceleration is limited.
- Limited throttle mode--The ECM will continue to use the accelerator pedal for propulsion control, however, the propulsion power is reduced.
- Throttle default mode--The ECM will turn OFF the throttle actuator motor, and the throttle will return to the spring loaded default position.

- Forced idle mode--The ECM will ignore the accelerator pedal input.
- Engine shutdown mode--The ECM will disable fuel and de-energise the throttle actuator.

&#169© Copyright Chevrolet. All rights reserved

Special Tools - Diagnostic Tools

Illustration	Tool Number/Description
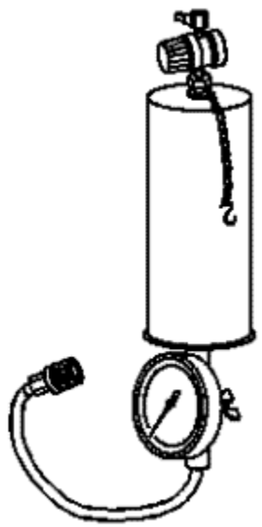	CH 35800-A J 35800-A Fuel Injector Cleaner
	CH 39021-380 J 39021-380 Fuel Injector Harness Adapter

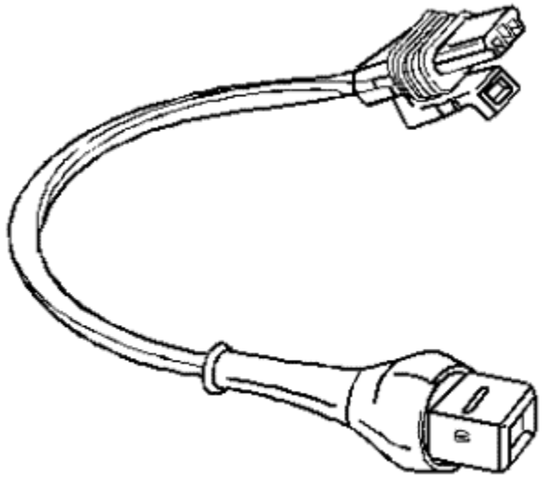	
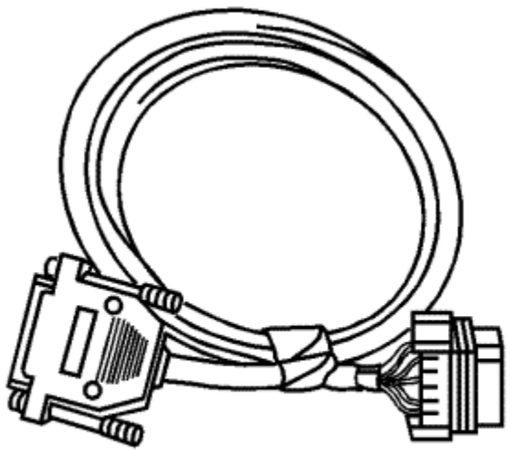	CH 39021-450 J 39021-450 Fuel Injector Harness Adapter

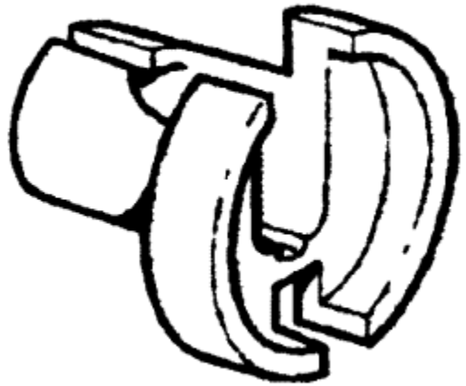	CH 41769-1 Fuel Line Quick Connect Separator 3/8
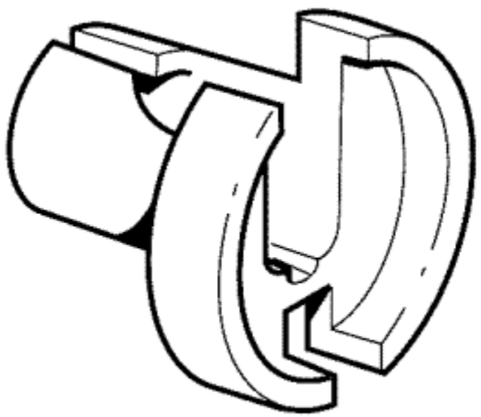	CH 41769-2 Fuel Line Quick Connect Separator 5/16
	CH 42220

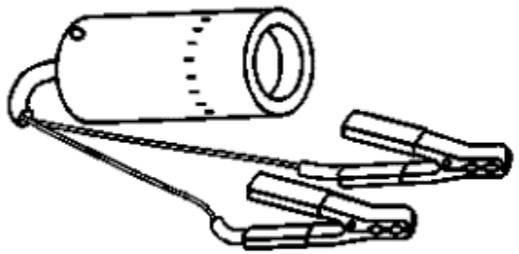	J 42220 Universal 12 Volt Leak Detection Lamp
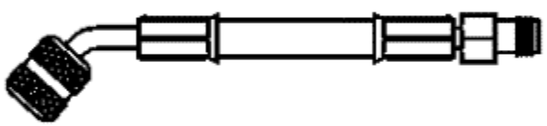	CH 42242 J 42242 Fuel Pressure Gauge Adapter

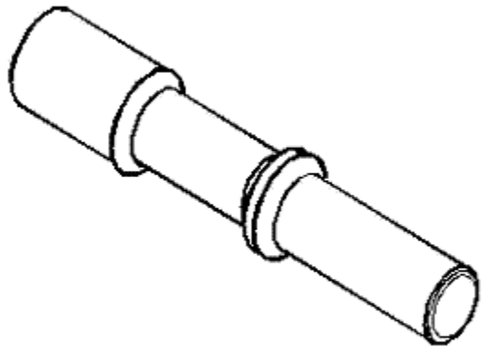	CH 42960-2 J 42960-2 Fuel Flapper Door Holder
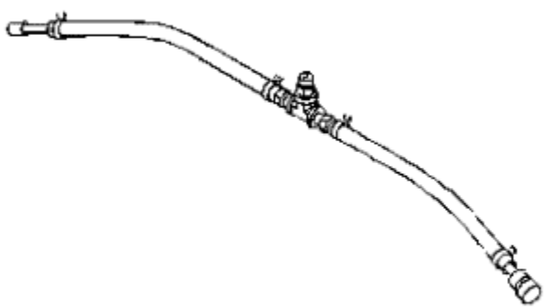	CH 42982 J 42982 Fuel Pressure Gauge Adapter

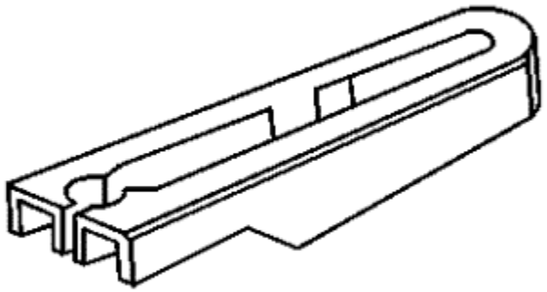	CH 43178 J 43178 Fuel Line Disconnect Tool
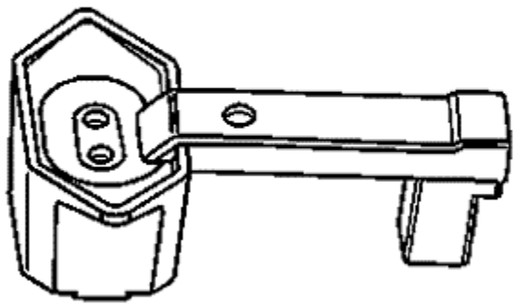	CH 44175 J 44175 Fuel Composition Testers Brazil - Use Local Equivalent
	CH 45004 J 45004

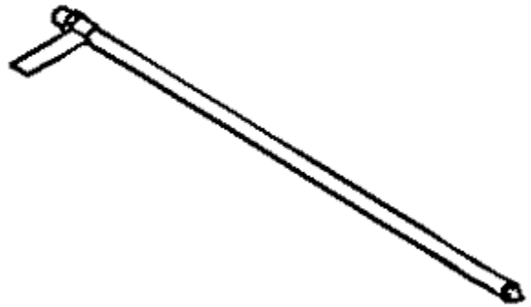	Fuel Tank Drain Hose Brazil - Use Local Equivalent
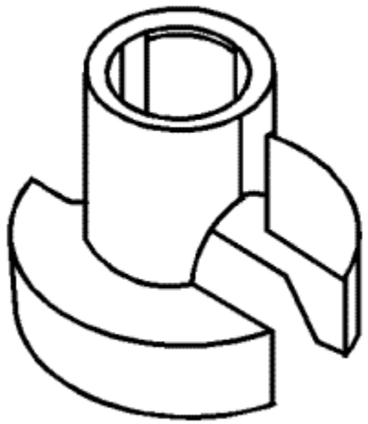	CH 47831 Fuel Line Disconnect Tool

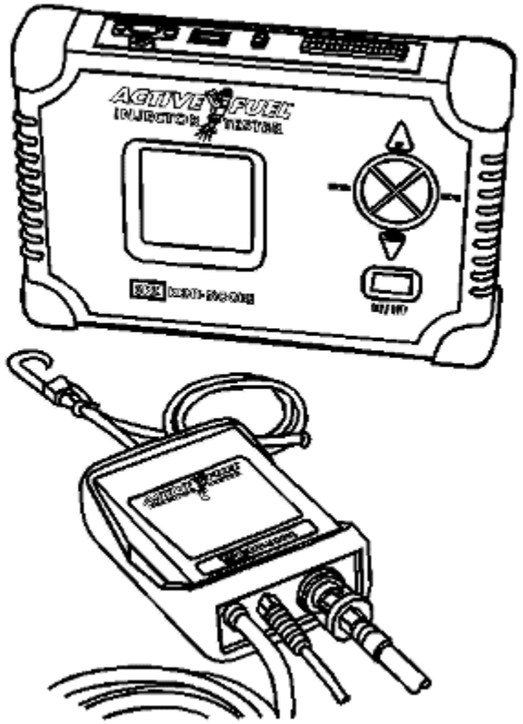	CH 47976 Active Fuel Injector Tester (AFIT)
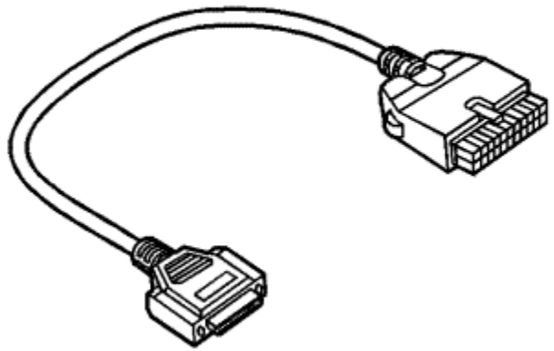	CH 47976-60 AFIT Harness Adapter

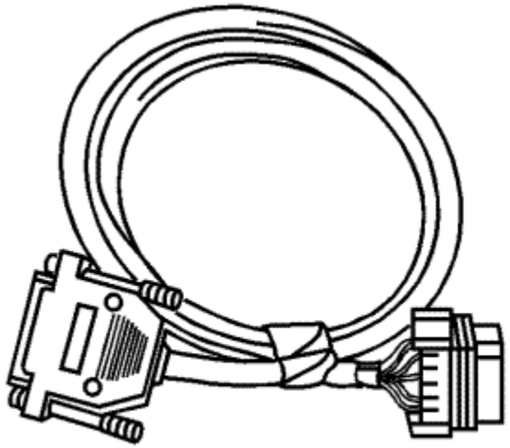	CH 47976-75 Fuel Injector Harness Adapter
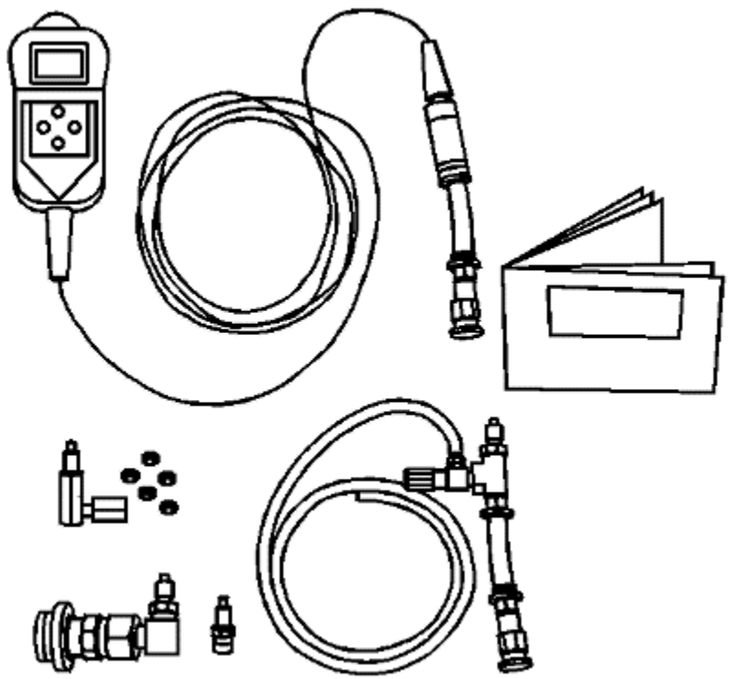	CH 48027 Digital Pressure gauge Brazil - Use Local Equivalent

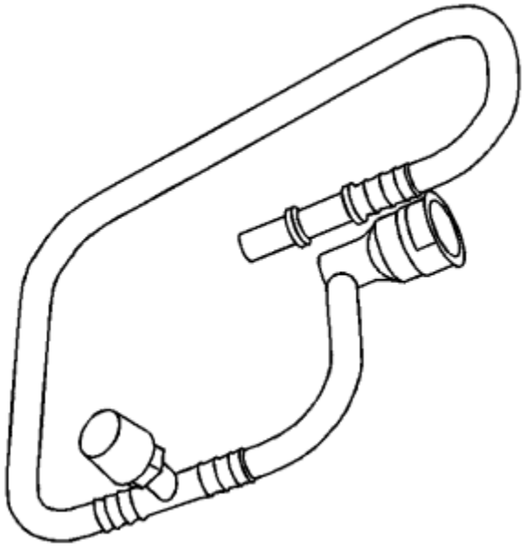	CH 48096 EVAP Service Access Port Tool
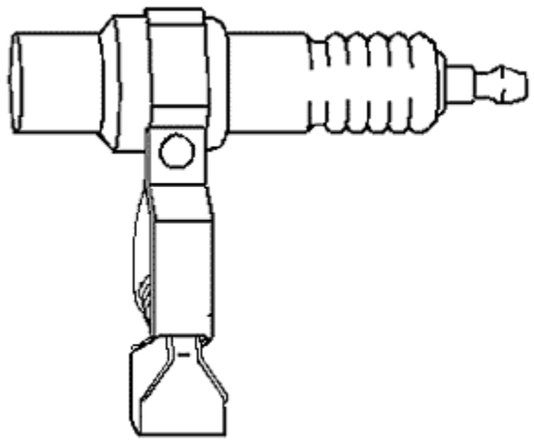	EL 26792 J 26792 HEI Spark Tester Brazil - Use Local Equivalent

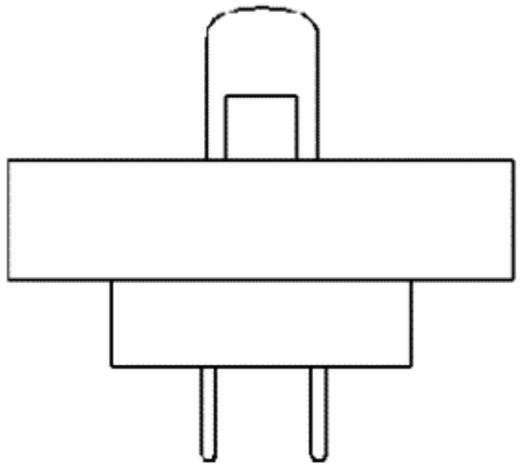	J 34730-2C Injector Test Lamp
	EL 39021 J 39021 Fuel Injector Coil and Balancer Tester
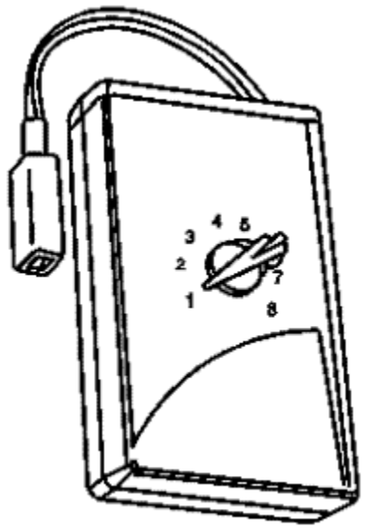	EL 39021-210 J 39021-210 Injector Tester Adapter Box

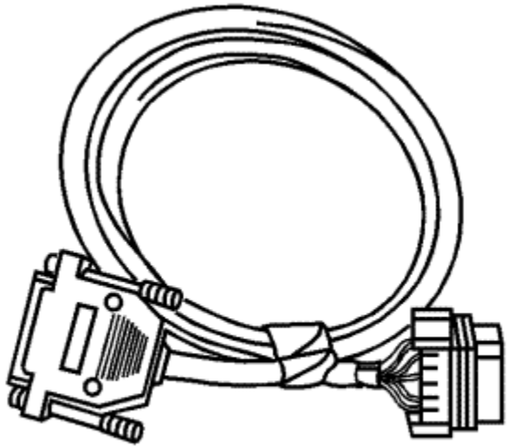	EL 39021-460 J 39021-460 Fuel Injector Test Adapter
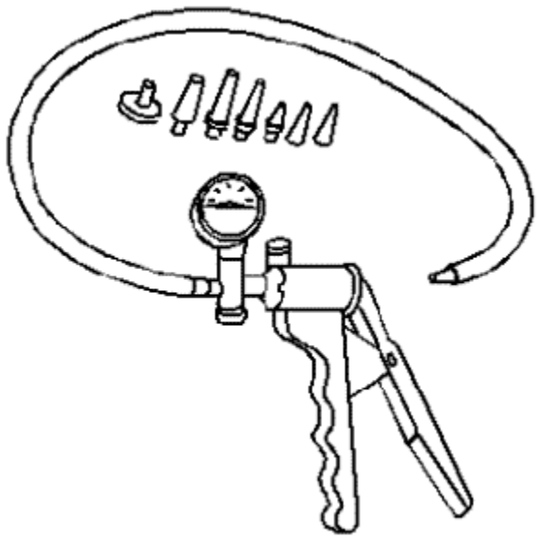	EN 23738-A J 23738-A Mityvac

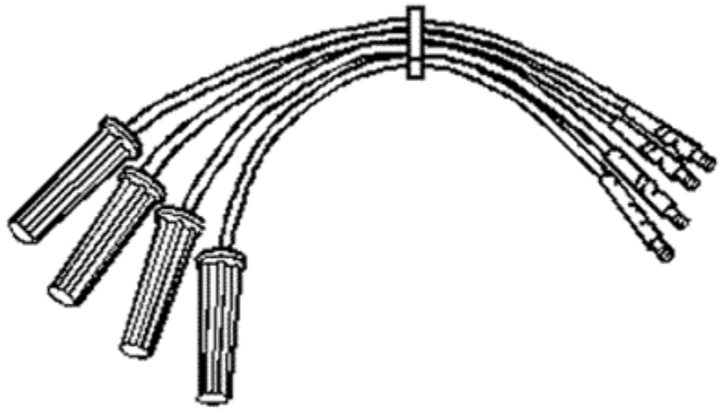

EN 36012-A

J 36012-A

Ignition System Diagnosis Harness

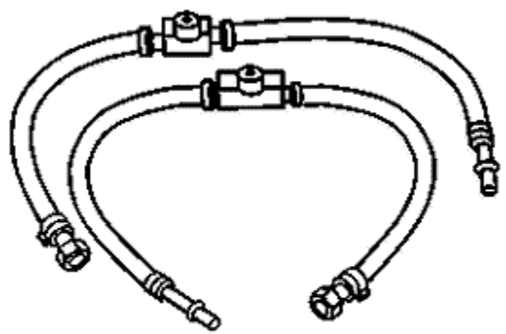

EN 37287

J 37287

Fuel Line Shut-Off Adapters (Flex Fuel)

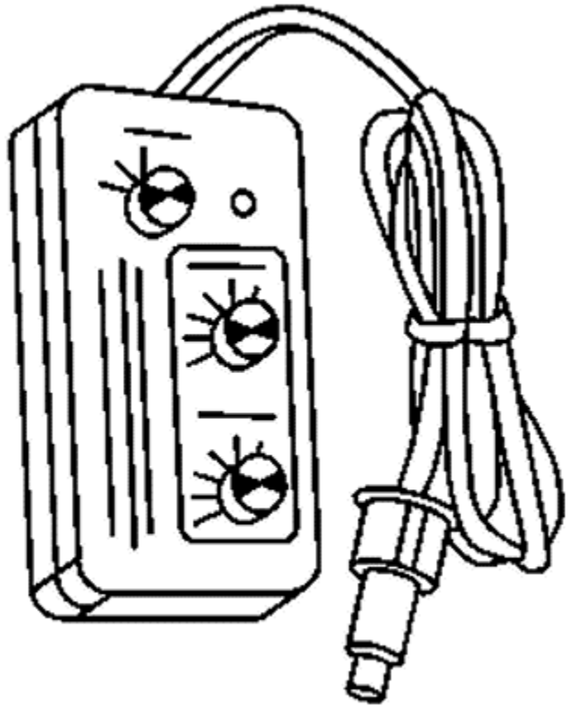	EN 38522 J 38522 Variable Signal Generator
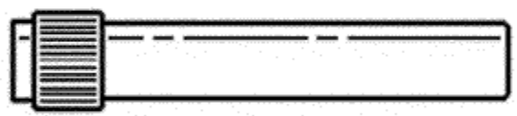	EN 41413-VLV J 41413-VLV EVAP Service Port Vent Fitting Brazil - Use Local Equivalent

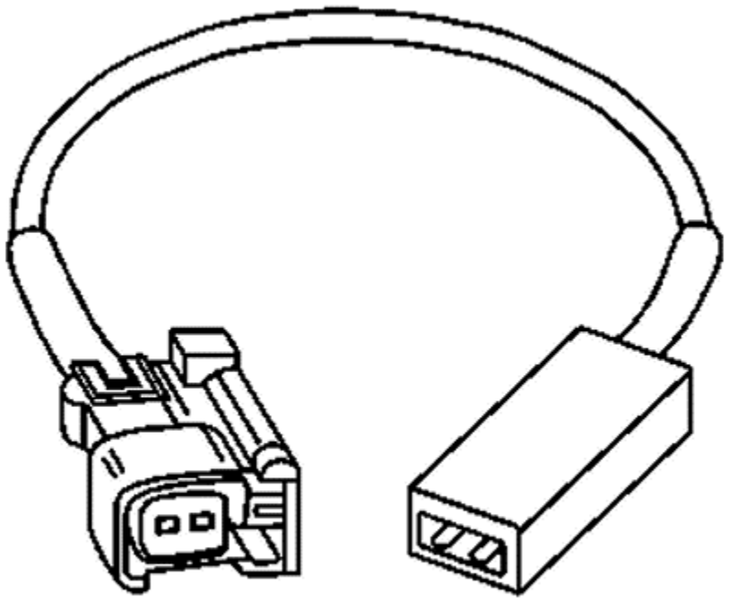	EN 44602 J 44602 Injector Test Adapter
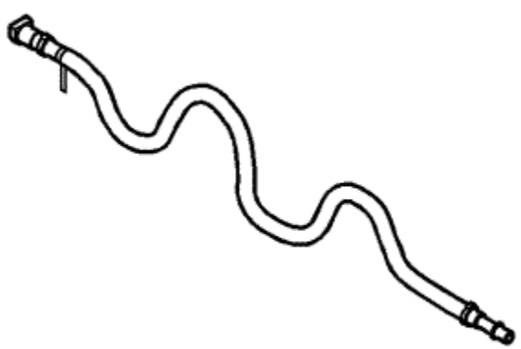	EN 47969 Fuel Supply Diagnostic Hose

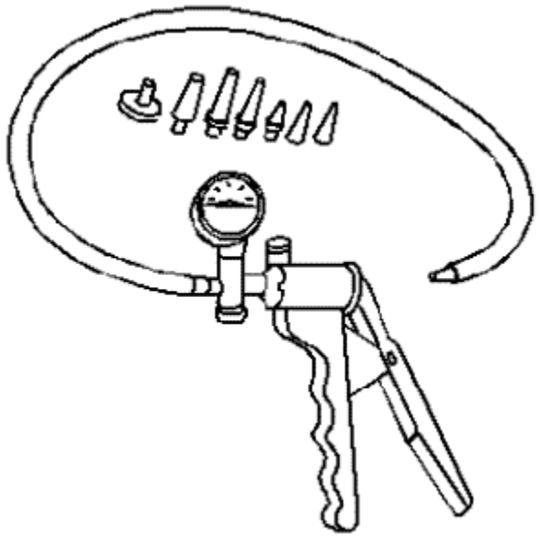	GE 23738-A J 23738-A Vacuum Pump
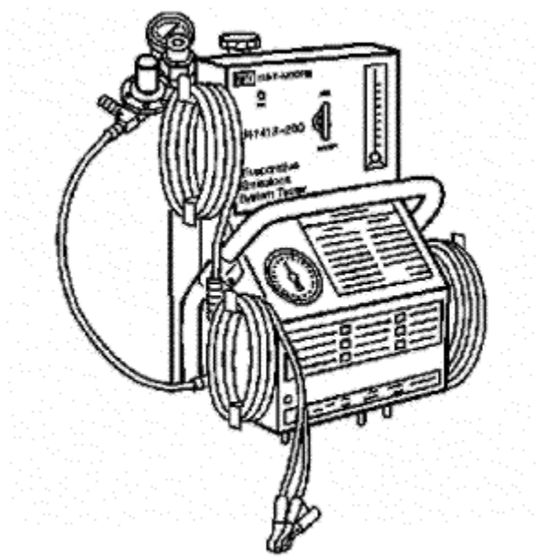	GE 41413-200 J 41413-200 Evaporative Emissions System Tester (EEST) Brazil - Use Local Equivalent

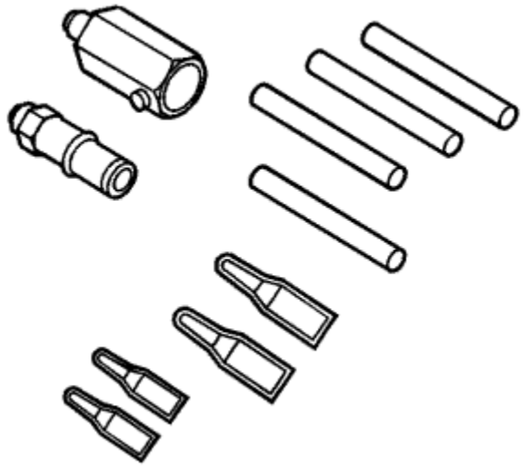	GE 41413-300 J 41413-300 EVAP Cap and Plug Kit Brazil - Use Local Equivalent
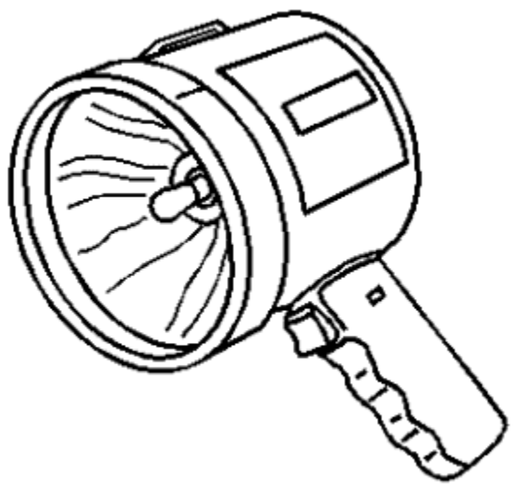	GE 41413-SPT J 41413-SPT High Intensity White Light Brazil - Use Local Equivalent

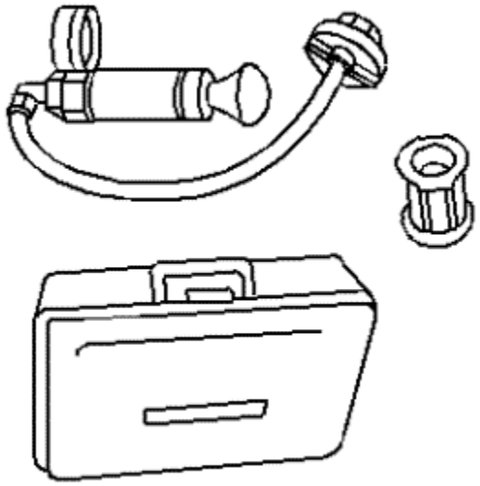	J 24460-A Cooling System Pressure Tester
	CH 41415-30 J 41415-30 Fuel Tank Cap Adapter Brazil - Use Local Equivalent

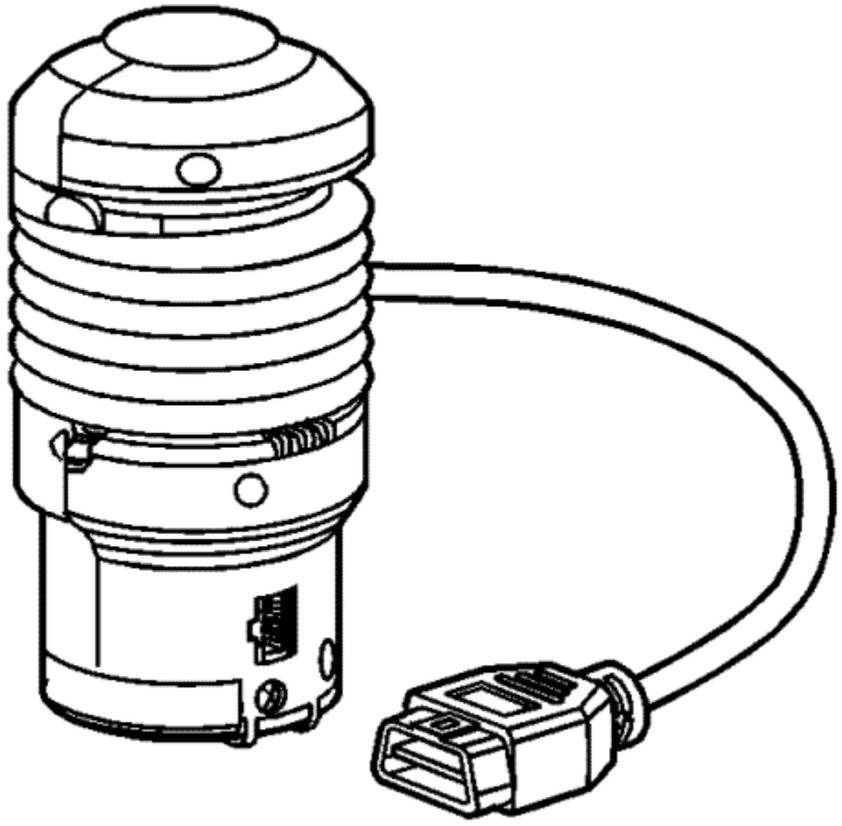

EN 42598-B

J 42598-B

Vehicle Data Recorder

© Copyright Chevrolet. All rights reserved

Fastener Tightening Specifications

Application	Specification	
	Metric	English
Coolant Recovery Reservoir Nut	9 N·m	80 lb in
Cooling Fan and Shroud Bolt	5 N·m	44 lb in
Radiator Upper Bracket Bolt	22 N·m	16 lb ft
Water Inlet Pipe Bolt	8 N·m	71 lb in
Water Outlet Pipe Bolt	8 N·m	71 lb in
Water Pump Bolts	8 N·m	71 lb in
Water Pump Pulley Bolts	10 N·m	89 lb in

© Copyright Chevrolet. All rights reserved

Engine Cooling System Specifications

Application	Specification	
	Metric	English
50/50 mixture of Dexcool® and distilled water		
Engine Cooling	7.3 L	7.7 qt

© Copyright Chevrolet. All rights reserved

Adhesives, Fluids, Lubricants, and Sealers

Application	Type of Material	GM Part Number	
		United States	Canada
EXTENDED LIFE COOLANT (DEXCOOL)	Fluid	12346290	10953464

© Copyright Chevrolet. All rights reserved

Engine Cooling Schematics

Engine Cooling Fans

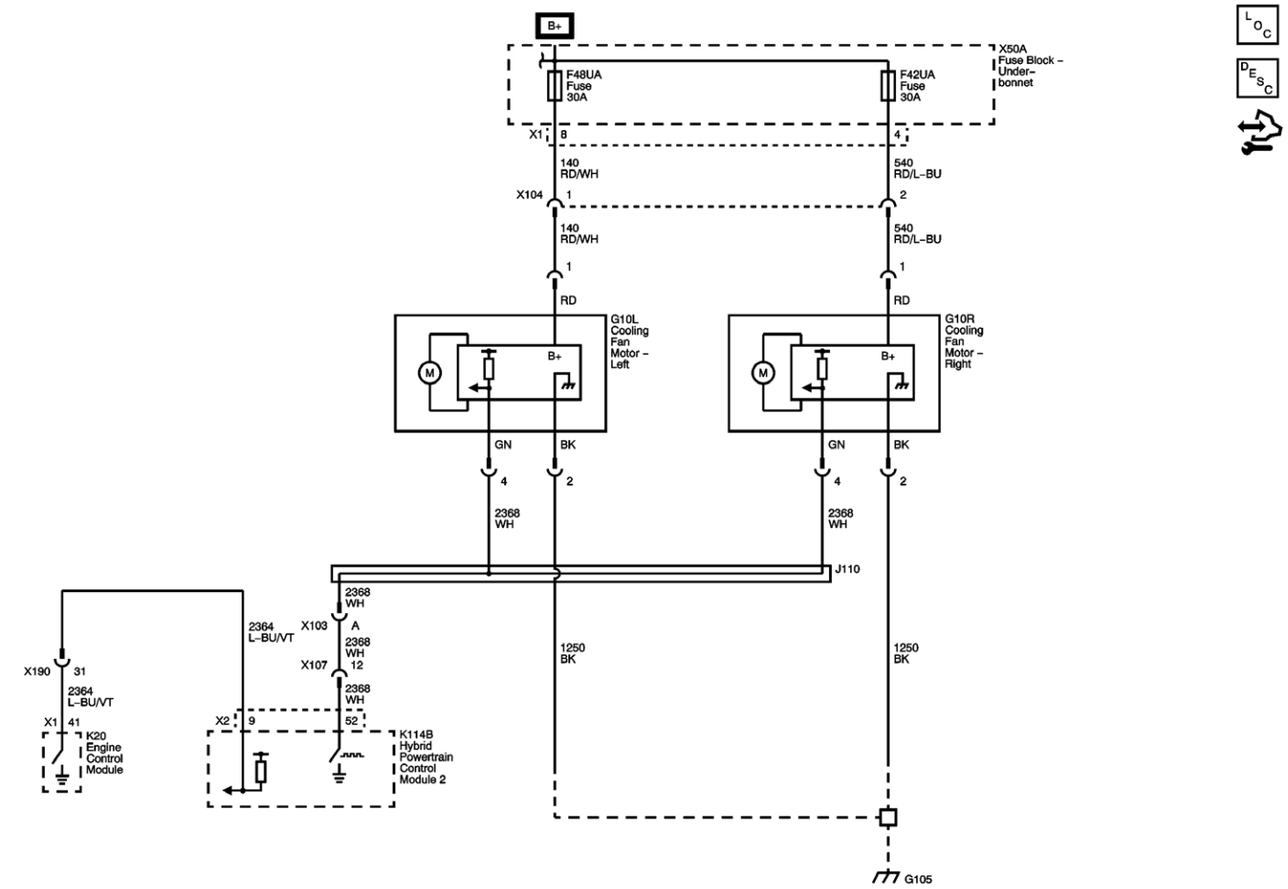

Master Electrical Component List

© Copyright Chevrolet. All rights reserved

DTC P00B3 or P00B4

Diagnostic Instructions

- Perform the Diagnostic System Check - Vehicle prior to using this diagnostic procedure.
- Review Strategy Based Diagnosis for an overview of the diagnostic approach.
- Diagnostic Procedure Instructions provides an overview of each diagnostic category.

DTC Descriptors

DTC P00B3: Radiator Coolant Temperature (RCT) Sensor Circuit Low Voltage

DTC P00B4: Radiator Coolant Temperature (RCT) Sensor Circuit High Voltage

Diagnostic Fault Information

Circuit	Short to Ground	Open/High Resistance	Short to Voltage	Signal Performance
Coolant Temperature Sensor Signal	P00B3	P00B4	P00B4*	P00B6
Low Reference	-	P00B4	P00B4*	P00B6
* Internal ECM or sensor damage may occur if the circuit is shorted to B+.				

Typical Scan Tool Data

Radiator Coolant Temperature Sensor

Circuit	Short to Ground	Open	Short to Voltage
Operating Conditions: Engine Running in Closed Loop ***Parameter Normal Range:*** Varies with ambient temperature			
Radiator Coolant Temperature Sensor Signal	140°C (284°F)	-40°C (-40°F)	-40°C (-40°F)*
Low Reference	-	-40°C (-40°F)	-40°C (-40°F)*

* Internal ECM or sensor damage may occur if the circuit is shorted to B+.

Circuit/System Description

The radiator coolant temperature (RCT) sensor is a variable resistor that measures the temperature of the engine coolant in the radiator. The engine control module (ECM) supplies 5 volts to the RCT signal circuit and supplies a ground to the low reference circuit.

The following table illustrates the difference between temperature, resistance, and voltage:

RCT	RCT Resistance	RCT Signal Voltage
Cold	High	High
Warm	Low	Low

Conditions for Running the DTC

P00B3

- The engine run time is greater than 10 seconds.
- The inlet air temperature (IAT) is colder than 70°C (158°F).
- The DTC runs continuously when the above conditions are met.

P00B4

- The engine run time is greater than 60 seconds.
- The inlet air temperature (IAT) is warmer than -7°C (19°F).
- The DTC runs continuously when the above conditions are met.

Conditions for Setting the DTC

P00B3

The ECM detects that the RCT sensor is warmer than 149°C (300°F) for greater than 10 seconds.

P00B4

Note: The scan tool only displays to -40°C (-40°F).

The ECM detects that the RCT sensor is colder than -60°C (-76°F) for greater than 10 seconds.

Action Taken When the DTC Sets

DTC P00B3 and P00B4 are Type B DTCs.

Conditions for Clearing the MIL/DTC

DTC P00B3 and P00B4 are Type B DTCs.

Diagnostic Aids

- As the thermostat opens, the RCT sensor temperature should rise steadily, then stabilise once the thermostat opens completely.
- Test the RCT sensor at various temperature levels in order to evaluate the possibility of a skewed sensor.
- If the vehicle has sat for greater than 8 hours, the RCT sensor and the ECT sensor values should display within 3°C (5°F).

Reference Information

Schematic Reference

Engine Controls Schematics

Connector End View Reference

Component Connector End Views

Description and Operation

Hybrid Modes of Operation Description

Electrical Information Reference

- Circuit Testing
- Connector Repairs
- Testing for Intermittent Conditions and Poor Connections
- Wiring Repairs

DTC Type Reference

Powertrain Diagnostic Trouble Code (DTC) Type Definitions

Scan Tool Reference

Control Module References for scan tool information

Circuit/System Verification

1. Engine running, observe the DTC information with a scan tool. DTCs P00B3 or P00B4 should not set.
2. Operate the vehicle within the conditions for running the DTC to verify the DTC does not reset. You may also operate the vehicle within the conditions that you observed from the freeze frame/failure records data.

Circuit/System Testing

1. Vehicle OFF, disconnect the harness connector at the B203 engine coolant temperature sensor.
2. Vehicle OFF, all systems OFF. It may take up to 2 minutes for all vehicle systems to power down. Test for less than 5 Ω between the low reference circuit terminal 1 and ground.
   If greater than the specified range, test the low reference circuit for an open/high resistance. If the circuit tests normal, replace the K20 ECM.
3. Vehicle in Service Mode, verify the scan tool Radiator Coolant Temperature Sensor parameter is at -40°C (-40°F).
   If warmer than the specified range, test the signal circuit terminal 2 for a short to ground. If the circuit tests normal, replace the K20 ECM.

   Note: If the fuse in the jumper wire opens, the signal circuit is shorted to a voltage and the sensor may be damaged.

4. Install a 1 A fused jumper wire between the signal circuit terminal 2 and the low reference circuit terminal 1. Verify the Radiator Coolant Temperature Sensor parameter is at 140°C (284°F).
   If less than the specified value, test the signal circuit for a short to voltage or an open/high resistance. If the circuit tests normal, replace the K20 ECM.
5. If all circuits test normal, test or replace the B203 engine coolant temperature sensor.

Component Testing

1. Vehicle OFF, remove the B203 engine coolant temperature sensor.

   Note: A thermometer can be used to test the sensor off the vehicle.

2. Test the engine coolant temperature sensor by varying the sensor temperature while monitoring the sensor resistance. Compare the readings with the Temperature Versus Resistance table and verify that the resistance is within 5 percent of the specification.
   If not within the specified range, replace the B203 engine coolant temperature sensor.

Repair Instructions

Perform the Diagnostic Repair Verification after completing the diagnostic procedure.

- Engine Coolant Temperature Sensor Replacement
- Control Module References for ECM replacement, setup, and programming

&#169© Copyright Chevrolet. All rights reserved

DTC P00B6

Diagnostic Instructions

- Perform the Diagnostic System Check - Vehicle prior to using this diagnostic procedure.
- Review Strategy Based Diagnosis for an overview of the diagnostic approach.
- Diagnostic Procedure Instructions provides an overview of each diagnostic category.

DTC Descriptor

DTC P00B6: Radiator Coolant Temperature (RCT) Sensor Performance

Diagnostic Fault Information

Circuit	Short to Ground	Open/High Resistance	Short to Voltage	Signal Performance
Coolant Temperature Sensor Signal	P00B3	P00B4	P00B4*	P00B6
Low Reference	-	P00B4	P00B4*	P00B6
* Internal ECM or sensor damage may occur if the circuit is shorted to B+.				

Typical Scan Tool Data

Radiator Coolant Temperature Sensor

Circuit	Short to Ground	Open	Short to Voltage
Operating Conditions: Engine Running in Closed Loop ***Parameter Normal Range:*** Varies with ambient temperature			
Coolant Temperature Sensor Signal	140°C (284°F)	-40°C (-40°F)	-40°C (-40°F)*
Low Reference	-	-40°C (-40°F)	-40°C (-40°F)*
* Internal ECM or sensor damage may occur if the circuit is shorted to B+.			

Circuit Description

The engine coolant temperature sensor is a variable resistor that measures the temperature of the engine coolant in the radiator. The engine control module (ECM) supplies 5 volts to the engine coolant temperature signal circuit and supplies a ground to the low reference circuit. The purpose of this diagnostic is to determine if the input from the RCT sensor is skewed warmer than normal. The internal clock of the ECM will record the amount of time the engine is OFF. If the required engine OFF time is met at start-up, the ECM will compare the temperature difference between the actual measured RCT and ECT sensors.

The following table illustrates the difference between temperature, resistance, and voltage:

RCT	RCT Resistance	RCT Signal Voltage
Cold	High	High
Warm	Low	Low

Conditions for Running the DTC

- DTCsP00B3, P00B4, P0112, P0113, P0116, P0117, P0118, P0502, P0503 or P2610 are not set.
- The vehicle has been OFF and the propulsion system inactive for greater than 8 hours before vehicle ON.
- The vehicle is ON, or the engine is running.
- The inlet air temperature (IAT) is warmer than -7°C (19°F).
- The fuel level is greater than 10 percent.
- The DTC runs once per ignition cycle when the above conditions are met.

Conditions for Setting the DTC

The ECM determines the absolute difference of temperature between the RCT start up temperature and ECT start up temperature is greater than 20°C (68°F).

Action Taken When the DTC Sets

DTC P00B6 is a Type B DTC.

Conditions for Clearing the MIL/DTC

DTC P00B6 is a Type B DTC.

Diagnostic Aids

- As the thermostat opens, the radiator coolant temperature sensor signal should rise steadily, then stabilise once the thermostat opens completely.
- Inspect for the correct operation of the engine cooling system and verify the correct coolant level.

Reference Information

Schematic Reference

Engine Controls Schematics

Connector End View Reference

Component Connector End Views

Description and Operation

Hybrid Modes of Operation Description

Electrical Information Reference

- Circuit Testing
- Connector Repairs
- Testing for Intermittent Conditions and Poor Connections
- Wiring Repairs

DTC Type Reference

Powertrain Diagnostic Trouble Code (DTC) Type Definitions

Scan Tool Reference

Control Module References for scan tool information

Circuit/System Verification

1. Engine running, observe the DTC information with a scan tool. DTC P00B3, P00B4, P0117, P0118, P0597, P0598, or P0599 should not be set.
   If a DTC is set, refer to Diagnostic Trouble Code (DTC) List - Vehicle for further diagnosis.
2. Verify the coolant in the radiator surge tank is at the correct level and there are no engine coolant leaks. Refer to Cooling System Draining and Filling and Loss of Coolant .
3. Engine ticking over for 15 minutes with the A/C OFF.

   Note: Depending on ambient temperature, it may take up to 4 minutes for the temperatures to equalise.

4. Command the engine coolant thermostat heater to 100 percent with a scan tool. Increase the engine speed to wide open throttle. Observe the scan tool radiator coolant temperature sensor and ECT sensor parameters. The radiator coolant temperature sensor and the ECT sensor parameters should be within 20°C (68°F).
5. Operate the vehicle within the conditions for running the DTC to verify the DTC does not reset. You may also operate the vehicle within the conditions that you observed from the freeze frame/failure records data.

Circuit/System Testing

1. Vehicle OFF, disconnect the harness connector at the B203 engine coolant temperature sensor.
2. Vehicle OFF, all systems OFF. This may take up to 2 minutes for all vehicle systems to power down. Test for less than 5 Ω between the low reference circuit terminal 1 and ground.
   If greater than the specified range, test the low reference circuit for an open/high resistance. If the circuit tests normal, replace the K20 ECM.
3. Vehicle in Service Mode, verify the scan tool Radiator Coolant Temperature Sensor parameter is at -40°C (-40°F).
   If warmer than the specified range, test the signal circuit terminal 2 for a short to ground. If the circuit tests normal, replace the K20 ECM.

   Note: If the fuse in the jumper wire opens, the signal circuit is shorted to a voltage and the sensor may be damaged.

4. Install a 1 A fused jumper wire between the signal circuit terminal 2 and the low reference circuit terminal 1. Verify the scan tool Radiator Coolant Temperature Sensor parameter is at 140°C (284°F).
   If less than specified range, test the signal circuit for a short to voltage or an open/high resistance. If the circuit tests normal, replace the K20 ECM.
5. If all circuits test normal, test or replace the B203 ECT sensor.

Component Testing

1. Vehicle OFF, remove the B203 ECT sensor.

   Note: A thermometer can be used to the used to test the sensor off the vehicle.

2. Test the engine coolant temperature sensor by varying the sensor temperature while monitoring the sensor resistance. Compare the readings with the Temperature Versus Resistance table and verify that the resistance is within 5 percent of the specification.
   If not within the specified range, replace the B203 ECT sensor.

Repair Instructions

Perform the Diagnostic Repair Verification after completing the diagnostic procedure.

- Engine Coolant Temperature Sensor Replacement
- Control Module References for ECM replacement, setup, and programming

&#169© Copyright Chevrolet. All rights reserved

DTC P00B7

Diagnostic Instructions

- Perform the Diagnostic System Check - Vehicle prior to using this diagnostic procedure.
- Review Strategy Based Diagnosis for an overview of the diagnostic approach.
- Diagnostic Procedure Instructions provides an overview of each diagnostic category.

DTC Descriptors

DTC P00B7: Radiator Coolant Temperature (RCT) Insufficient Flow

Diagnostic Fault Information

Circuit	Short to Ground	Open/High Resistance	Short to Voltage	Signal Performance
Coolant Temperature Sensor Signal	P00B3	P00B4	P00B4*	P00B6
Low Reference	-	P00B4	P00B4*	P00B6
* Internal ECM or sensor damage may occur if the circuit is shorted to B+.				

Typical Scan Tool Data

Radiator Coolant Temperature Sensor

Circuit	Short to Ground	Open	Short to Voltage
Operating Conditions: Engine Running in Closed Loop ***Parameter Normal Range:*** Varies with ambient temperature			
Radiator Coolant Temperature Sensor Signal	140°C (284°F)	-40°C (-40°F)	-40°C (-40°F)*
Low Reference	-	-40°C (-40°F)	-40°C (-40°F)*
* Internal ECM or sensor damage may occur if the circuit is shorted to B+.			

Circuit Description

The engine control module (ECM) monitors the temperature of the engine radiator coolant. The ECM controls the thermostat with a pulse width modulated (PWM) signal. The ECM compares the radiator coolant temperature to the engine coolant temperature in order to determine if there sufficient coolant flow through the thermostat.

Conditions for Running the DTC

- DTCs P00B3, P00B4, P00B6, P0116, P0117, and P0118 are not set.
- The engine run time is greater than 45 s.
  OR
- The engine coolant temperature is greater than 70°C (158°F).
- The DTC runs continuously when the above conditions are met.

Conditions for Setting the DTC

Note: The scan tool display range is between -40 and + 150°C (-40 and +302°F).

The ECM detects the difference between the RCT sensor and the ECT sensor is greater than 45°C (81°F) when the ECT sensor is warmer than 117°C (242°F) for greater than 5 s.

Action Taken When the DTC Sets

DTC P00B7 is a Type B DTC.

Conditions for Clearing the MIL/DTC

DTC P00B7 is a Type B DTC.

Diagnostic Aids

- The thermostat has a mechanical fail-safe in case of an electrical condition with the thermostat heater. The mechanical thermostat will open at approximately 80°C (176°F). The mechanical thermostat will cycle from approximately 85°C (185°F) to approximately 102°C (215°F).
- A resistance condition in the RCT sensor circuits may cause this DTC. This condition results in a greater voltage on the RCT sensor signal circuit, which is interpreted by the ECM as a colder RCT.

Reference Information

Schematic Reference

Engine Controls Schematics

Description and Operation

Hybrid Modes of Operation Description

Electrical Information Reference

- Circuit Testing
- Connector Repairs
- Testing for Intermittent Conditions and Poor Connections
- Wiring Repairs

DTC Type Reference

Powertrain Diagnostic Trouble Code (DTC) Type Definitions

Scan Tool Reference

Control Module References for scan tool information

Circuit/System Verification

1. Vehicle in Service Mode, observe the DTC information with a scan tool. DTC P00B3, P00B4, P00B6, P0117, P0118, P0597, P0598, and P0599 should not be set.
   If a DTC is set, refer to Diagnostic Trouble Code (DTC) List - Vehicle for further diagnosis.
2. Verify the coolant in the radiator surge tank is at the correct level and there are no engine coolant leaks. Refer to Cooling System Draining and Filling and Loss of Coolant .
3. Verify the engine cooling fan operates. Refer to Cooling Fan Malfunction - DTC P148A-P148C .
4. Engine ticking over for 15 minutes with the A/C OFF.

   Note: Depending on ambient temperature, it may take up to 4 minutes for the temperature to decrease less than the specified value.

5. Command the Engine Coolant Thermostat Heater to 100 percent with a scan tool. Increase the engine speed to wide open throttle. Observe the scan tool ECT sensor parameter. The temperature should decrease to less than 85°C (185°F).
6. Operate the vehicle within the conditions for running the DTC to verify the DTC does not reset. You may also operate the vehicle within the conditions that you observed from the freeze frame/failure records data.

Circuit/System Testing

1. Vehicle OFF, inspect the cooling system for the conditions below. Refer to Symptoms - Engine Cooling .

- Weak coolant solution
- Obstructed radiator air flow or bent radiator fins
- Blocked cooling system passages
- Radiator hoses that are restricted, collapsed, or deteriorated
- Damaged water pump and or belt
- Loss of cooling system pressure
  - Leaking surge tank cap
  - Radiator hoses
- Cylinder head or an engine block that is cracked or plugged

  If you find any of the above conditions, repair as necessary.

2. If all conditions test normal, replace the E41 engine coolant thermostat heater.

Repair Instructions

Perform the Diagnostic Repair Verification after completing the diagnostic procedure.

Water Inlet Replacement

&#169© Copyright Chevrolet. All rights reserved

DTC P0597-P0599

Diagnostic Instructions

- Perform the Diagnostic System Check - Vehicle prior to using this diagnostic procedure.
- Review Strategy Based Diagnosis for an overview of the diagnostic approach.
- Diagnostic Procedure Instructions provides an overview of each diagnostic category.

DTC Descriptor

DTC P0597: Engine Coolant Thermostat Heater Control Circuit

DTC P0598: Engine Coolant Thermostat Heater Control Circuit Low Voltage

DTC P0599: Engine Coolant Thermostat Heater Control Circuit High Voltage

Diagnostic Fault Information

Circuit	Short to Ground	Open/High Resistance	Short to Voltage	Signal Performance
Ignition Voltage Circuit	P0598*	P0030, P0036, P0102, P0135, P0137, P0141, P0458, P0598	-	-
Thermostat Control Circuit	P0030, P0036, P0102, P0135, P0137, P0141, P0458, P0598	P0597	P0599, P0690	-
*Opens the fuse that supplies voltage to the engine coolant thermostat				

Circuit/System Description

The engine control module (ECM) controls the pulse width modulated (PWM) thermostat. The thermostat controls coolant flow and regulates the engine operating temperature. Ignition voltage is supplied directly to the thermostat. The ECM controls the thermostat by grounding the control circuit with a solid state device called a driver. The driver is equipped with a feedback circuit that is pulled-up to a voltage. The ECM can determine if the control circuit is open, shorted to ground, or shorted to a voltage by monitoring the feedback voltage.

Conditions for Running the DTCs

- The ignition is ON or the engine is running.
- The DTCs run continuously once the above condition is met

Conditions for Setting the DTC

The ECM detects that the commanded state of the driver and the actual state of the control circuit do not match for greater than 15 seconds.

Action Taken When the DTC Sets

- DTCs P0597, P0598, and P0599 are Type B DTCs.
- The engine control module commands the engine cooling fans ON.

Conditions for Clearing the DTC

DTCs P0597, P0598, and P0599 are Type B DTCs.

Diagnostic Aids

The thermostat has a mechanical fail-safe in case of an electrical condition with the thermostat heater. The mechanical thermostat will open at approximately 80°C (176°F). The mechanical thermostat will cycle from approximately 85°C (185°F) to approximately 102°C (215°F).

Reference Information

Schematic Reference

Engine Controls Schematics

Connector End View Reference

Component Connector End Views

Description and Operation

Hybrid Modes of Operation Description

Electrical Information Reference

- Circuit Testing
- Connector Repairs
- Testing for Intermittent Conditions and Poor Connections
- Wiring Repairs

DTC Type Reference

Powertrain Diagnostic Trouble Code (DTC) Type Definitions

Scan Tool Reference

Control Module References for scan tool information

Circuit/System Verification

1. Ignition ON, engine running, observe the DTC information with a scan tool. DTC P0685, P0689, P0690 or P1682 should not be set.
   If a DTC is set, refer to DTC P0685, P0689, P0690, or P1682 .
2. Engine running, observe the following scan tool control circuit status parameters.
   - Engine Coolant Thermostat Heater Control Circuit Low Voltage Test Status
   - Engine Coolant Thermostat Heater Control Circuit Open Test Status
   - Engine Coolant Thermostat Heater Control Circuit High Voltage Test Status

   Each parameter should display OK or Not Run.
3. Operate the vehicle within the conditions for running the DTC to verify the DTC does not reset. You may also operate the vehicle within the conditions that you observed from the freeze frame/failure records data.

Circuit/System Testing

1. Ignition OFF, disconnect the harness connector at the E41 engine coolant thermostat heater.
2. Service Mode active, verify that a test lamp illuminates between the ignition circuit terminal 1 and ground.
   If the test lamp does not illuminate, test the ignition circuit for a short to ground or an open/high resistance. If the circuit tests normal and the ignition circuit fuse is open, test all the components connected to the ignition circuit and replace as necessary.
3. Command the Engine Coolant Thermostat Heater to 10 % with a scan tool. Test for 2.5-3.5 V between the control circuit terminal 2 and ground.
   If less than the specified range, test the control circuit for a short to ground or an open/high resistance. If the circuit/connections test normal, replace the K20 ECM.
   If greater than the specified range, test the control circuit for a short to voltage. If the circuit tests normal, replace the K20 ECM.
4. Command the Engine Coolant Thermostat Heater to 100 % with a scan tool. The DMM should transition from 2.5-3.5 V when commanded to 10 % to less than 0.1 V when commanded to 100 %.
   If the circuit voltage does not correspond to the specified values, replace the K20 ECM.
5. If all circuits test normal, test or replace the E41 engine coolant thermostat heater.

Repair Instructions

Perform the Diagnostic Repair Verification after completing the diagnostic procedure.

- Water Inlet Replacement
- Control Module References for ECM replacement, setup, and programming

&#169© Copyright Chevrolet. All rights reserved

DTC P1485-P1487

Diagnostic Instructions

- Perform the Diagnostic System Check - Vehicle prior to using this diagnostic procedure.
- Review Strategy Based Diagnosis for an overview of the diagnostic approach.
- Diagnostic Procedure Instructions provides an overview of each diagnostic category.

DTC Descriptors

DTC P1485: Cooling Fan Output Circuit

DTC P1486: Cooling Fan Output Circuit Low Voltage

DTC P1487: Cooling Fan Output Circuit High Voltage

Diagnostic Fault Information

Circuit	Short to Ground	Open/High Resistance	Short to Voltage	Signal Performance
Cooling Fan Output Circuit	P148B, P1486	P148A, P1485	P148C, P1487	-
Fans operate at 90% with all malfunctions				

Circuit/System Description

The hybrid powertrain control module 2 (HPCM 2) controls the radiator cooling fans with a pulse width modulated (PWM) signal to the cooling fan control modules. The HPCM 2 supplies a regulated 12 volts to the engine control module (ECM) via the cooling fan output circuit. The ECM modulates the output circuit to ground to request operation of the engine radiator cooling fans in response to predetermined internal combustion engine (ICE) coolant temperatures. The HPCM 2 uses the request from the ECM, along with other inputs such as the need for power electronics, high voltage battery, or HVAC cooling to determine the total percentage of cooling fan operation in a range of 0-100 percent. The ECM cooling fan output circuit is controlled with a solid state device called a driver. The driver is equipped with a feedback circuit which is pulled up to a voltage within the controller. The ECM can determine if the output circuit is open, shorted to ground, or shorted to a voltage by monitoring the feedback voltage.

Conditions for Running the DTC

- DTC P2537 is not set.
- The 12 V battery voltage is equal to or greater than 11 V.
- The accessory circuit is active for greater than 5 seconds.
- DTCs P1485, P1486, and P1487 run continuously when the conditions above are met.

Conditions for Setting the DTC

The ECM detects that the commanded state of the driver and the actual state of the output circuit do not match for greater than 5 seconds.

Action Taken When the DTC Sets

DTCs P1485, P1486 and P1487 are type B DTCs.

Conditions for Clearing the DTC

DTCs P1485, P1486 and P1487 are type B DTCs.

Diagnostic Aids

DTCs P1485, P1486 and P1487 will not keep the cooling fans from operating. If one of these DTCs is set the HPCM 2 commands the cooling fans to 90%. If the cooling fans do not operate, refer to Cooling Fan Malfunction - DTC P148A-P148C for further diagnosis.

Reference Information

Schematic Reference

Engine Cooling Schematics

Connector End View Reference

Component Connector End Views

Description and Operation

- Hybrid Modes of Operation Description
- Hybrid Cooling System Description and Operation

Electrical Information Reference

- Circuit Testing
- Connector Repairs
- Testing for Intermittent Conditions and Poor Connections
- Wiring Repairs

DTC Type Reference

Powertrain Diagnostic Trouble Code (DTC) Type Definitions

Scan Tool Reference

Control Module References for scan tool information

Circuit/System Verification

1. Engine running. Observe the DTC information with a scan tool. DTC P1485, P1486, or P1487 should not be set.
2. Observe the scan tool parameters listed below:
   - Cooling Fan Control Circuit Open Test Status
   - Cooling Fan Control Circuit Low Voltage Test Status
   - Cooling Fan Control Circuit High Voltage Test Status

   Each of the parameters should display OK or Not Run.
3. Operate the vehicle within the conditions for running the DTC to verify the DTC does not reset. You may also operate the vehicle within the conditions that you observed from the Freeze Frame/Failure Records data.

Circuit/System Testing

1. Vehicle OFF, disconnect the X2 harness connector at the K114B HPCM 2.

   Note: The cooling fan output circuit is pulled-up to a voltage within the ECM. 3-4 V measured on this circuit with the HPCM 2 harness connector disconnected is normal.

2. Vehicle in Service Mode, test for 3-4 V between the ECM cooling fan output circuit terminal X2-9 and ground.
   If less than the specified range, test the circuit for a short to ground or an open/high resistance. If the circuit tests normal, replace the K20 ECM.
   If greater than the specified range, test the circuit for a short to voltage. If the circuit tests normal, replace the K20 ECM.
3. If all circuits test normal, replace the K114B HPCM 2.

Repair Instructions

Perform the Diagnostic Repair Verification after completing the diagnostic procedure.

Control Module References for engine control module or hybrid powertrain control module 2 replacement, programming and setup

&#169© Copyright Chevrolet. All rights reserved

DTC P2181

Diagnostic Instructions

- Perform the Diagnostic System Check - Vehicle prior to using this diagnostic procedure.
- Review Strategy Based Diagnosis for an overview of the diagnostic approach.
- Diagnostic Procedure Instructions provides an overview of each diagnostic category.

DTC Descriptor

DTC P2181: Engine Cooling System Performance

Circuit/System Description

The engine control module (ECM) monitors temperature difference between the engine coolant temperature (ECT) sensor and the radiator coolant temperature (RCT) sensor during a cold start-up. The purpose of this diagnostic is to analyse the engine coolant thermostat for being stuck open.

Conditions for Running the DTC

- DTCs P00B3, P00B4, P00B6, P0101, P0102, P0103, P0111, P0112, P0113, P0114, P0116, P0117 or P0118 are not set.
- The engine run time is between 70 s and 30 min.
- The engine coolant temperature (ECT) sensor at start-up is between -10°C to +59°C (14°F to 138°F).
- The inlet air temperature (IAT) sensor is between -7°C to +60°C (-4°F to +140°F).
- The airflow into the engine is between 1 to 100 g/s.
- The DTC runs once per ignition cycle when the above conditions are met.

Conditions for Setting the DTC

The ECM detects the engine coolant thermostat is stuck open for at least 2.5 min.

Action Taken When the DTC Sets

DTC P2181 is a Type B DTC

Conditions for Clearing the DTC

DTC P2181 is a Type B DTC

Diagnostic Aids

- Insufficient vehicle interior heating is an indication of incorrect thermostat operation.
- The scan tool Desired ECT Sensor and the ECT Sensor parameters should be within 5°C (9°F) when the engine is at operating temperature.
- A resistance condition in the ECT sensor circuits may cause this DTC. This condition results in a greater voltage on the ECT sensor signal circuit, which is interpreted by the ECM as a colder ECT.

Reference Information

Schematic Reference

Engine Controls Schematics

Connector End View Reference

Component Connector End Views

Description and Operation

Cooling System Description and Operation

Hybrid Modes of Operation Description

Electrical Information Reference

- Circuit Testing
- Connector Repairs
- Testing for Intermittent Conditions and Poor Connections
- Wiring Repairs

Scan Tool Reference

Control Module References for scan tool information

Circuit/System Verification

1. Engine running, observe the DTC information with a scan tool. DTC P00B3, P00B4, P00B6, P0117 or P0118 should not be set.
   If a DTC is set, refer to Diagnostic Trouble Code (DTC) List - Vehicle for further diagnosis.
2. Verify the coolant in the radiator surge tank is at the correct level and there are no engine coolant leaks. Refer to Cooling System Draining and Filling and Loss of Coolant .

   Note: Depending on ambient temperature, it may take up to 4 min for the temperature to increase above the specified value.

3. Engine idling for 15 min with the A/C OFF. Verify the engine cooling fan is not ON at all times.
4. Command the Engine Coolant Thermostat Heater to 0 % with a scan tool. Increase the engine speed to wide open throttle. Observe the scan tool ECT sensor parameter. The temperature should increase to greater than 102°C (215°F).
   If less than the specified value, replace the E41 engine coolant thermostat heater.
5. Operate the vehicle within the conditions for running the DTC to verify the DTC does not reset. You may also operate the vehicle within the conditions that you observed from the freeze frame/failure records data.

Repair Instructions

Perform the Diagnostic Repair Verification after completing the diagnostic procedure.

Water Inlet Replacement

&#169© Copyright Chevrolet. All rights reserved

Symptoms - Engine Cooling

Important Preliminary Inspections Before Starting

Before using the Symptom diagnosis, perform the following:

- Perform Diagnostic System Check - Vehicle and verify all of the following items:
  - Ensure that the engine control module (ECM) and indicator lamp are operating correctly.
  - Ensure that there are no diagnostic trouble codes (DTCs) that are stored.
  - Scan tool data is within a normal operating range.
- Verify the customer concern.
- Perform the Visual/Physical Inspection in this section. The visual/physical inspection is extremely important, and can lead to correcting a condition without additional testing. It may also help reveal the cause of an intermittent condition.
- Locate the correct symptom. Perform the tests and inspections associated with the symptom.

Review the entire cooling system operation in order to familiarise yourself with the system functions. Refer to Cooling System Description and Operation and Hybrid Cooling System Description and Operation .

Visual/Physical Inspection

Caution: Use the connector test adapter kit EL-35616-F for any test that requires probing the following items:

- The control module harness connectors
- The electrical centre fuse/relay cavities
- The component terminals
- The component harness connector

Using this kit will prevent damage caused by the improper probing of connector terminals.

Several of the symptom procedures call for a careful visual and physical inspection. This can lead to correcting a condition without further tests and can save time. This inspection should include the following areas:

- Ensure that all control module grounds are clean, tight, and correctly located.
- Inspect cooling system hoses and pipes for splits, kinks, and proper connections. Inspect thoroughly for any type of a leak or a restriction.

- Inspect for a dirty or restricted engine cooling radiator and HVAC condenser.
- Inspect for aftermarket devices which could affect the operation of the Cooling System.
- Inspect the easily accessible or visible system components for obvious damage or conditions which could cause the symptom.
- Inspect the surge tank reservoirs for the proper coolant level.

Identifying Intermittent Conditions

Many intermittent conditions occur with harness or connector movement due to engine torque, rough pavement, vibration or physical movement of a component. Refer to the following for a list to help isolate an intermittent condition:

- Moisture and water intrusion in connectors, terminals, and components
- Connector mating
- Terminal contact
- High circuit or component resistance-High resistance can include any resistance, regardless of the amount, which can interrupt the operation of the component.
- Harnesses that are routed too tight, or chaffed circuits
- High or low ambient temperature
- High or low engine coolant temperatures
- High underhood temperatures
- Heat build up in component or circuit due to circuit resistance, poor terminal contact, or high electrical load
- High or low system voltage
- High vehicle load conditions
- Rough road surface
- Electro-magnetic interference (EMI)/circuit interference from relays, solenoids or other electrical surge
- Incorrect installation of non-factory, aftermarket, and after factory add on accessories

If an intermittent is detected, refer to Testing for Intermittent Conditions and Poor Connections for specific strategies in diagnosing intermittent conditions.

Symptom List

Refer to a symptom diagnostic procedure from the following list in order to diagnose the symptom:

- Cooling Fan Malfunction - DTC P148A-P148C
- Engine Overheating
- Loss of Coolant
- Thermostat Diagnosis
- Engine Fails To Reach Normal Operating Temperature

&#169© Copyright Chevrolet. All rights reserved

Engine Overheating

Step	Action	Yes	No
DEFINITION: The engine temperature lamp comes on and stays on, or temperature gauge shows hot, or coolant overflows from the coolant recovery reservoir onto the ground while the engine is running. **Special Tools** *GE-26568* Coolant and Battery Fluid Tester			
1	Check the condenser, radiator, and auxiliary coolers for any obstructions or bent fins that would prevent air flow through the radiator. Is there any airflow obstruction or bent fins?	Go to Step 2	Go to Step 3
2	1. Remove any debris that may cause an air flow obstruction. 2. Remove or relocate aftermarket add-on components that block air flow to the radiator. Does the engine still overheat?	Go to Step 3	System OK
3	Check for loose, missing, or damaged radiator air seals or deflectors. Are there any loose, missing, or damaged radiator air seals or deflectors?	Go to Step 4	Go to Step 5
4	Repair or replace any loose, missing, or damaged radiator air seals or deflectors. Does the engine still overheat?	Go to Step 5	System OK
5	Check for an inoperative cooling fan.. Is the cooling fan inoperative?	Go to Step 6	Go to Step 7
6	Repair or replace the cooling fan(s) as necessary. Refer to Cooling Fan and Shroud Replacement . Does the engine still overheat?	Go to Step 7	System OK
7	Check for a loss of coolant. Refer to Loss of Coolant . Does the engine still overheat?	Go to Step 8	System OK
8	Check for kinked or pinched cooling hoses. Does the engine still overheat?	Go to Step 9	Go to Step 10

9	1. Relieve any kinks by rerouting the hoses. 2. Replace the hoses, if necessary. Does the engine still overheat?	Go to Step 10	System OK
10	Using *GE-26568* Coolant and Battery Fluid Tester , check the coolant concentration. Does the coolant concentration test correctly?	Go to Step 12	Go to Step 11
11	Replace the coolant, if necessary. Refer to Cooling System Draining and Filling . Does the engine still overheat?	Go to Step 12	System OK
12	Check for any blocked cooling system passages. Are there blocked cooling system passages?	Go to Step 13	Go to Step 14
13	Remove any obstructions by flushing the cooling system. Refer to Flushing . Does the engine still overheat?	Go to Step 14	Go to Step 19
14	Inspect the water pump drive belt. Does the engine still overheat?	Go to Step 15	System OK
15	Check for a faulty thermostat. Refer to Thermostat Diagnosis . Does the engine still overheat?	Go to Step 16	System OK
16	Replace the radiator. Refer to Radiator Replacement . Does the engine still overheat?	Go to Step 17	System OK
17	Check for a faulty water pump. The impeller blades may be eroded or broken. Is the water pump faulty?	Go to Step 18	-
18	Replace the water pump. Refer to Water Pump Replacement . Does the engine still overheat?	Go to Step 19	-
19	Operate the system to verify the repair. Did you correct the condition?	System OK	-

© Copyright Chevrolet. All rights reserved

Loss of Coolant

Step	Action	Yes	No
DEFINITION: The cooling system is loosing coolant either internally or externally.			
1	Were you sent here from Symptoms, or another diagnostic table?	Go to Step 2	Go to Symptoms
2	Repair any present DTCs. Refer to Diagnostic System Check - Vehicle . Is the action complete?	Go to Step 3	-
3	Inspect the coolant level. Is the coolant at the proper level?	Go to Step 5	Go to Step 4
4	Fill the cooling system to the proper level. Refer to Cooling System Draining and Filling . Is the action complete?	Go to Step 5	-
5	Engine overheating can cause a loss of coolant. Is the engine overheating?	Go to Step 16	Go to Step 6
6	1. Idle the engine at normal operating temperature. 2. Inspect for heavy white smoke coming out of the exhaust pipe. Is a heavy white smoke present from the exhaust pipe?	Go to Step 7	Go to Step 8
7	1. Coolant in the exhaust system creates a distinctive, burning coolant odour in the exhaust. 2. Condensation in the exhaust system can cause an odourless white smoke during engine warm up. Does the white smoke have a burning coolant type odour?	Go to Step 17	Go to Step 8
8	Visually inspect the hoses, pipes and hose clamps. Are any of the hoses, clamps or pipes leaking?	Go to Step 18	Go to Step 9
	Visually inspect the following components: • Coolant pressure cap • Core plugs • Throttle Body • Engine block		

9	• Intake manifold • Radiator • Thermostat housing • Water pump Are any of the listed components leaking?	Go to Step 18	Go to Step 10
10	1. Pressure test the cooling system. Refer to Cooling System Leak Testing . 2. With the cooling system pressurised, visually inspect the components listed in steps 8 and 9. Are any leaks present?	Go to Step 18	Go to Step 11
11	Pressure test the coolant pressure cap. Refer to Pressure Cap Testing . Does the coolant pressure cap hold pressure?	Go to Step 12	Go to Step 15
12	Inspect for the following conditions: • A coolant smell inside of the vehicle • Coolant in the HVAC module drain tube • Coolant on the vehicle floor covering near the HVAC module Is coolant present?	Go to Step 18	Go to Step 13
13	Inspect the underside of the engine oil fill cap for a gray/white milky substance. Is there a milky substance under the oil fill cap?	Go to Step 14	Go to Step 19
14	Inspect the engine oil fluid level indicator for a gray/white milky substance. Is there a milky substance on the engine oil fluid level indicator?	Go to Step 17	Go to Step 19
15	Replace the coolant pressure cap. Is the repair complete?	Go to Step 19	-
16	Repair the engine overheating condition. Refer to Engine Overheating . Is the repair complete?	Go to Step 19	-
17	Repair the engine internal coolant leak. Is the repair complete?	Go to Step 19	-
18	Repair or replace the leaking component. Refer to the appropriate repair. Is the repair complete?	Go to Step 19	-
19	Operate the system in order to verify the repair.		

	Did you find and correct the condition?	System OK	Go to Step 2

&#169© Copyright Chevrolet. All rights reserved

Thermostat Diagnosis

Step	Action	Values	Yes	No
1	1. Pressure test the cooling system and the cap for leaks. 2. Repair any leaks before proceeding. These engines use a 90°C (194°F) thermostat. The ambient temperatures should be within the specified range given. 3. Set the HVAC controls in the OFF position. 4. Run the cold engine at idle (68-70°F) for 15-20 minutes before checking the engine temperature. 5. Check the engine coolant temperature at idle with the scan tool. Is the engine coolant temperature (ECT) between 90-105°C (194-221°F)?	13-38°C (55-100°F)	System OK	Go to Step 2
2	Is the ECT below 90°C (194°F)?	-	Go to Step 3	Go to Step 4
3	The thermostat is opening early, or the thermostat seal is leaking. Replace the thermostat and the thermostat seal. Is the repair complete?	-	System OK	-
4	Is the ECT over 105°C (221°F)?	-	Go to Step 5	-
5	Is the radiator inlet hot?	-	Go to Step 6	Go to Step 7
6	1. Turn ON the heater. 2. Check if hot air is coming from the heater outlets. Is the air hot?	-	Go to Step 11	Go to Step 12
7	There may be air in the system. 1. Add coolant to the surge tank if the coolant level is low. Refer to Cooling System Draining and Filling . 2. Recheck the radiator inlet hose. Is the inlet hose hot?	-	Go to Step 6	Go to Step 8
	Inspect for blockage in the following areas:			

8	• The cylinder head • The radiator • The radiator hoses Is there a blockage?	-	Go to Step 9	Go to Step 10
9	1. Repair the blockage. 2. Recheck the coolant temperature with the the scan tool. Is the repair complete?	-	System OK	-
10	1. Replace the thermostat. Refer to Water Inlet Replacement . 2. Recheck the coolant temperature with the scan tool. Is the repair complete?	-	System OK	-
11	Inspect for blockage in the radiator. Is there any blockage?	-	Go to Step 9	Go to Step 10
12	1. Accelerate the engine several times in order to remove any air from the system. 2. Inspect for blockage in the heater circuit. 3. Inspect for any pinched or buckled hoses. Is there any blockage?	-	Go to Step 9	Go to Step 13
13	Is the repair complete?		System OK	-

&#169© Copyright Chevrolet. All rights reserved

Engine Fails To Reach Normal Operating Temperature

Step	Action	Value(s)	Yes	No
1	Check the coolant level in the radiator surge tank. Refer to Cooling System Draining and Filling . Is the coolant at the proper level?	-	Go to Step 3	Go to Step 2
2	Add coolant to the radiator surge tank as necessary. Does the engine still fail to reach normal operating temperatures?	-	Go to Step 3	System OK
3	Check for a blockage in the coolant passages. Are there any blockages in the coolant passages?	-	Go to Step 4	Go to Step 5
4	Flush the cooling system or flow check the radiator. Does the engine still fail to reach normal operating temperatures?	-	Go to Step 5	System OK
5	Check to see if the incorrect thermostat was installed or if it is stuck or sticks in the open position. Was the incorrect thermostat installed, or is it stuck or does it stick in the open position?	-	Go to Step 6	-
6	Replace the thermostat. Refer to Water Inlet Replacement . Does the engine still fail to reach normal operating temperature?	-	-	System OK

© Copyright Chevrolet. All rights reserved

Pressure Cap Testing

Special Tools

- *GE-42401-A* Radiator Cap and Surge Tank Test Adapter
- *EN-24460-A* Cooling System Pressure Tester

For equivalent regional tools, Refer toSpecial Tools

Pressure Cap Testing

Warning: To avoid being burned, do not remove the radiator cap or surge tank cap while the engine is hot. The cooling system will release scalding fluid and steam under pressure if radiator cap or surge tank cap is removed while the engine and radiator are still hot.

1. Remove the pressure cap.
2. Wash the pressure cap sealing surface with water.

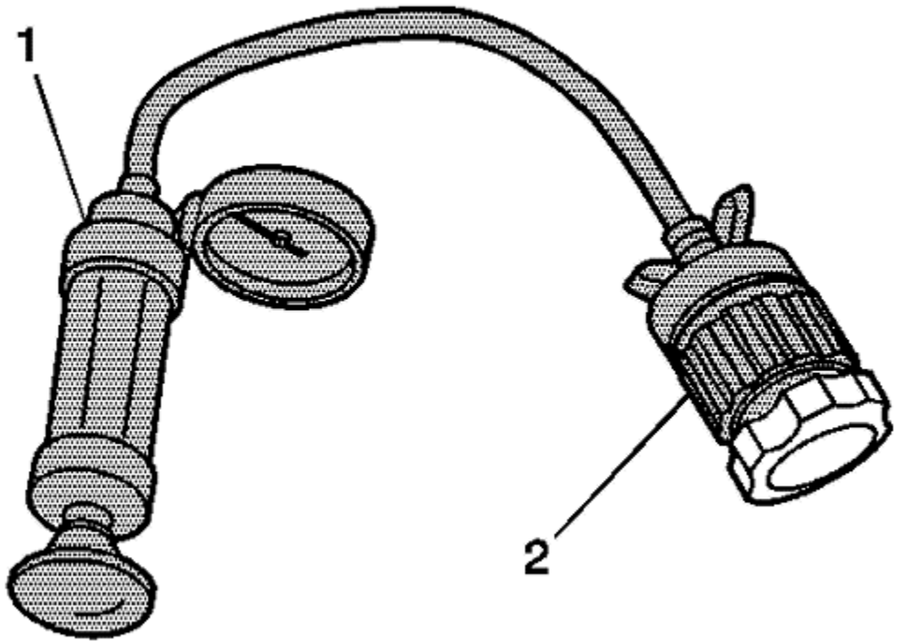

Note: Lubricate *GE-42401-A* Radiator Cap and Surge Tank Test Adapter and pressure cap O-rings with coolant and press cap to seat O-ring on *GE-42401-A* Radiator Cap and Surge Tank Test Adapter before turning to engage threads.

3. Use the *EN-24460-A* Cooling System Pressure Tester (1) with *GE-42401-A* Radiator Cap and Surge Tank Test Adapter (2) in order to test the pressure cap.
4. Test the pressure cap for the following conditions:
   - Pressure release when the *EN-24460-A* Cooling System Pressure Tester exceeds the pressure rating of the pressure cap.
   - Maintain the rated pressure for at least 10 seconds.

   Note the rate of pressure loss.
5. Replace the pressure cap under the following conditions:
   - The pressure cap does not release pressure which exceeds the rated pressure of the cap.
   - The pressure cap does not hold the rated pressure.

&#169© Copyright Chevrolet. All rights reserved

Cooling System Leak Testing

Special Tools

- *EN-24460-A* Cooling System Pressure Tester
- *GE-42401-A* Radiator Cap and Surge Tank Test Adapter

For equivalent regional tools, Refer toSpecial Tools

Warning: Under pressure, the temperature of the solution in the radiator can be considerably higher, without boiling. Removing the radiator cap while the engine is hot (pressure is high), will cause the solution to boil instantaneously, with explosive force. The solution will spew out over the engine, wings, and the person removing the cap. Serious bodily injury may result. Flammable antifreeze, such as alcohol, is not recommended for use at any time. Flammable antifreeze could cause a serious fire.

Warning: In order to help avoid being burned, do not remove the radiator cap while the engine and the radiator are hot. Scalding fluid and steam can be blown out under pressure if the cap is removed too soon.

1. Remove the pressure cap.
2. Test the operation of the pressure cap. Refer to Pressure Cap Testing .
3. Wash the pressure cap mating surface with water.

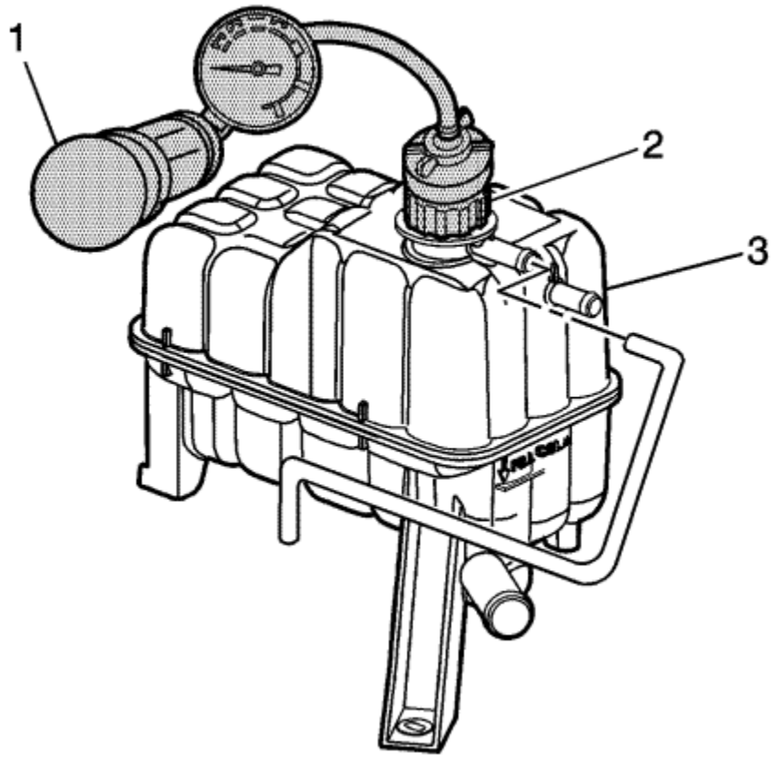

4. Use the *EN-24460-A* Cooling System Pressure Tester with the *GE-42401-A* Radiator Cap and Surge Tank Test Adapter in order to apply pressure to the cooling system.

   Do not exceed the pressure cap rating.

5. The cooling system should hold the rated pressure for at least 2 minutes.

   Observe the gauge for any pressure loss.

6. Repair any leaks as required.

&#169© Copyright Chevrolet. All rights reserved

Cooling System Draining and Filling

Special Tools

- *GE-26568* Coolant and Battery Tester
- *GE-47716* Vac-N-Fill Coolant Refill Tool
- *GE-42401-A* Radiator Cap and Surge Tank Test Adapter

For equivalent regional tools, Refer toSpecial Tools

Draining Procedure

Warning: To avoid being burned, do not remove the radiator cap or surge tank cap while the engine is hot. The cooling system will release scalding fluid and steam under pressure if radiator cap or surge tank cap is removed while the engine and radiator are still hot.

1. To drain the engine radiator, remove the engine coolant temperature sensor from the radiator. Refer to Engine Coolant Temperature Sensor Replacement

2. Attach the venturi assembly to the vacuum tank.

3. Attach a shop air hose to the venturi assembly.

   Ensure the valve on the venturi assembly is closed.

4. Attach the vacuum hose to the vacuum tank.

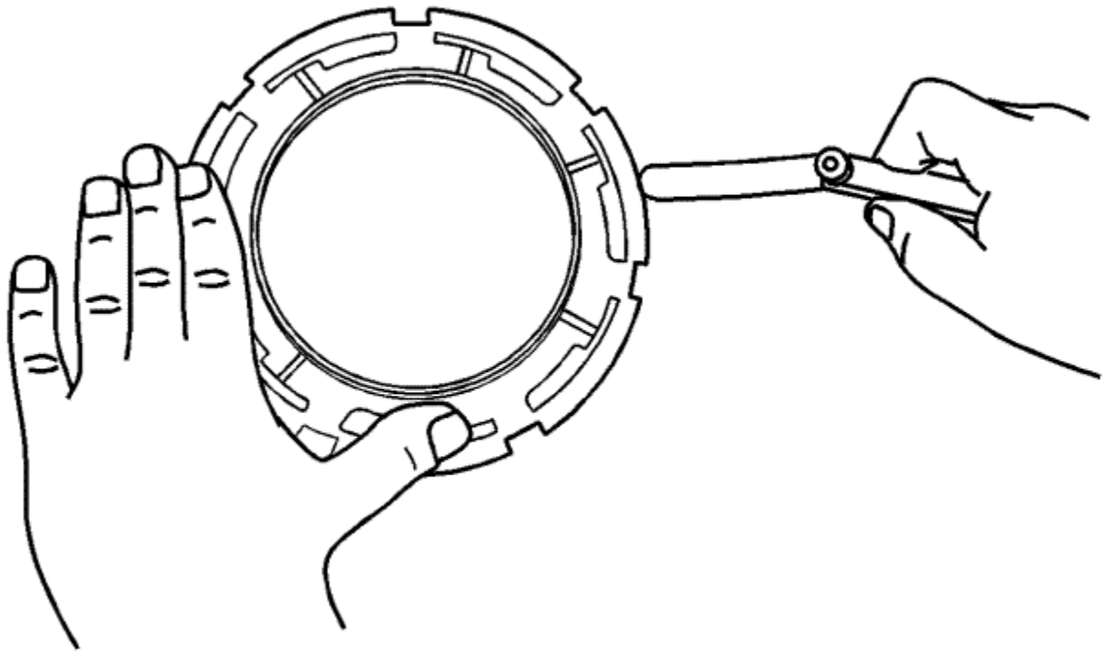

5. Attach the extraction hose to the vacuum hose.
6. Insert the extraction hose into the radiator outlet front hose until the extraction hose contacts the bottom of the radiator outlet hose.

7. Open the valve on the venturi assembly to start a vacuum draw.
8. Use the extraction hose to draw out coolant until the radiator is empty.
9. The vacuum tank has a drain valve on the bottom of the tank. Open the valve to drain coolant from the vacuum tank into a suitable container for disposal.

10. If a complete engine block drain is required, remove the engine block drain plug.
11. To drain the heater cooling loop, remove the hose from the inlet of the heater water auxiliary pump. Refer to Heater Water Auxiliary Pump Replacement
12. Inspect the coolant.
13. Follow the appropriate procedure based on the condition of the coolant.
    - Normal in appearance--Follow the filling procedure.
    - Discolored--Follow the flush procedure. Refer to Flushing

Vac-N-Fill Procedure

Warning: To avoid being burned, do not remove the radiator cap or surge tank cap while the engine is hot. The cooling system will release scalding fluid and steam under pressure if radiator cap or surge tank cap is removed while the engine and radiator are still hot.

Note: To prevent boiling of the coolant/water mixture in the vehicles cooling system, do not apply vacuum to a cooling system above 49°C (120°F). The tool will not operate properly when the coolant is boiling.

1. Install *GE-42401-2* Radiator Cap and Surge Tank Test Adapter into the surge tank fill neck.
2. Install *GE-42401-3* Radiator Cap and Surge Tank Test Adapter to the surge tank fill neck.
3. Attach the Vac N Fill cap to the *GE-42401-3* Radiator Cap and Surge Tank Test Adapter .

4. Attach the vacuum gauge assembly to the Vac N Fill cap.

5. Attach the fill hose to the barb fitting on the vacuum gauge assembly.

   Ensure that the valve is closed.

   Note: Use a 50/50 mixture of DEX-COOL antifreeze and de-ionized water.

   Always use more coolant than necessary. This will eliminate air from being drawn into the cooling system.

6. Pour the coolant mixture into the graduated reservoir.
7. Place the fill hose in the graduated reservoir.

   Note: Prior to installing the vacuum tank onto the graduated reservoir, ensure that the drain valve located on the bottom of the tank is closed.

8. Install the vacuum tank on the graduated reservoir with the fill hose routed through the cut-out area in the vacuum tank.

9. Attach the venturi assembly to the vacuum tank.

10. Attach a shop air hose to the venturi assembly.

    Ensure the valve on the venturi assembly is closed.

11. Attach the vacuum hose to the vacuum gauge assembly and the vacuum tank.
12. Position the passenger compartment heater coolant control solenoid valve to normal using GDS. The hybrid powertrain control module 2 controls the passenger compartment heater coolant control solenoid Valve

13. Open the valve on the venturi assembly. The vacuum gauge will begin to rise and a hissing noise will be present.

14. Continue to draw vacuum until the needle stops rising. This should be 610-660 mm Hg (24-26 in Hg).

    Cooling hoses may start to collapse. This is normal due to vacuum draw.

15. To aid in the fill process, position the graduated reservoir above the coolant fill port.

16. Slowly open the valve on the vacuum gauge assembly. When the coolant reaches the top of the fill hose, close the valve. This will eliminate air from the fill hose.
17. Close the valve on the venture assembly.
18. If there is a suspected leak in the cooling system, allow the system to stabilise under vacuum and monitor for vacuum loss.

    If vacuum loss is observed, refer to Loss of Coolant .

19. Open the valve on the vacuum gauge assembly. The vacuum gauge will drop as coolant is drawn into the system.

20. Once the vacuum gauge reaches zero, close the valve on the vacuum gauge.
21. Repeat steps 14-21 one time.

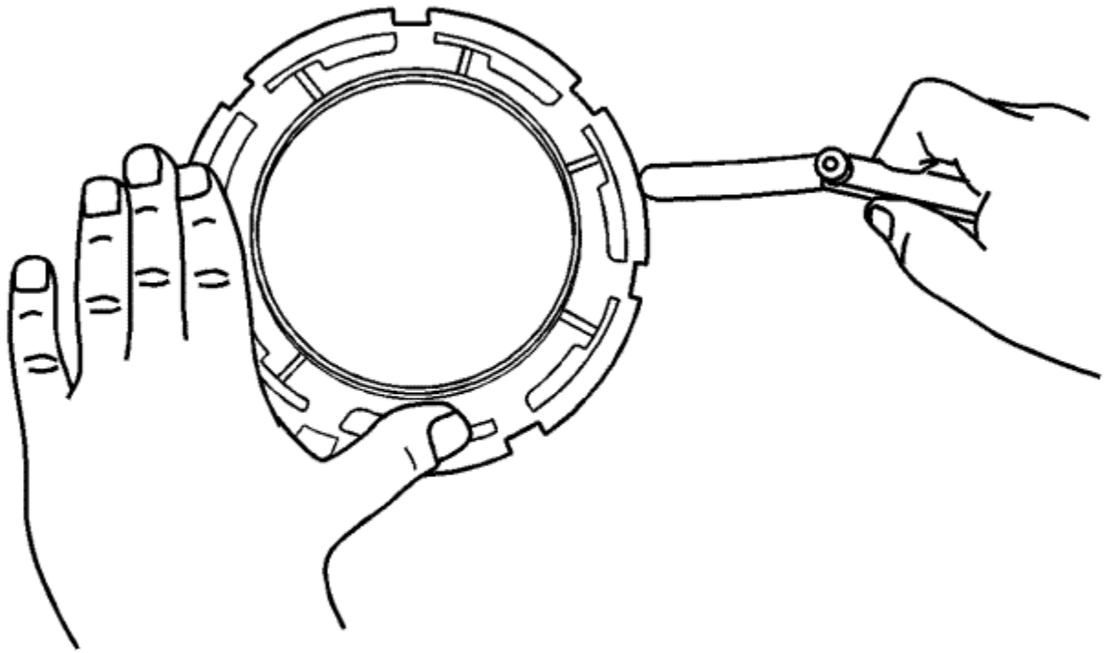

22. Detach the Vac N Fill cap from the *GE-42401-3* Radiator Cap and Surge Tank Test Adapter .
23. Remove *GE-42401-2* Radiator Cap and Surge Tank Test Adapter from the surge tank fill neck.
24. Add coolant to the system as necessary.
25. Turn on the auxiliary coolant pump for 2 minutes using the GDS. The remote HVAC module controls the auxiliary coolant pump.
26. Start the engine.
27. Using GDS, increase the speed to 2000 rpm until the thermostat opens (approximately 100C).

Note: Do not allow engine coolant temperature to exceed 110C or damage to the Coolant Heater Control Module could occur.

28. Turn engine off.
29. Turn on the auxiliary coolant pump for 1 minute using GDS.
30. Turn off the auxiliary coolant pump and wait 5 minutes.
31. Repeat steps 24-30, three times.
32. Inspect the concentration of the coolant mixture using *GE-26568* Coolant and Battery Tester .

    Note: After filling the cooling system, the extraction hose can be used to remove excess coolant to achieve the proper coolant level.

33. Detach the vacuum hose form the vacuum gauge assembly.
34. Attach the extraction hose to the vacuum hose.

35. Open the valve on the venture assembly to start a vacuum draw.

36. Use the extraction hose to draw out coolant to the proper level.
37. The vacuum tank has a drain valve on the bottom of the tank. Open the valve to drain coolant from the vacuum tank into a suitable container for disposal.

&#169© Copyright Chevrolet. All rights reserved

Flushing

Note: This procedure is intended for the engine cooling system only. Never use this procedure to flush the hybrid cooling system.

Note: Do not use a chemical flush.

Store used coolant in the proper manner, such as in a used engine coolant holding tank. Do not pour used coolant down a drain. Ethylene glycol antifreeze is a very toxic chemical. Do not dispose of coolant into the sewer system or ground water. This is illegal and ecologically unsound.

Various methods and equipment can be used to flush the cooling system. If special equipment is used, such as a back flusher, follow the manufacturer's instruction. Always remove the thermostat before flushing the cooling system.

When the cooling system becomes contaminated, the cooling system should be flushed thoroughly to remove the contaminants before the engine is seriously damaged.

1. Drain the cooling system. Refer to Cooling System Draining and Filling .
2. Remove the coolant recovery reservoir. Refer to Coolant Recovery Reservoir Replacement .
3. Clean and flush the coolant recovery reservoir with clean, drinkable water.
4. Install the coolant recovery reservoir. Refer to Coolant Recovery Reservoir Replacement .
5. Follow the drain and fill procedure using only clean, drinkable water. Refer to Cooling System Draining and Filling .
6. Run the engine for 20 minutes.
7. Stop the engine.
8. Drain the cooling system. Refer to Cooling System Draining and Filling
9. Repeat the procedure if necessary, until the fluid is nearly colorless.
10. Fill the cooling system. Refer to Cooling System Draining and Filling .

© Copyright Chevrolet. All rights reserved

Radiator Cleaning

Warning: NEVER spray water on a hot heat exchanger. The resulting steam could cause personal injury.

Caution: The heat exchanger fins are necessary for good heat transfer. Do not brush the fins. This may cause damage to the fins, reducing heat transfer.

Note: Remove bugs, leaves, dirt and other debris by blowing compressed air through the engine side of the radiator.

- Some conditions may require the use of warm water and a mild detergent.
- Clean the A/C condenser fins.
- Clean between the A/C condenser and radiator.
- Clean the radiator cooling fins.
- Straighten any damaged cooling fins.

&#169© Copyright Chevrolet. All rights reserved

Coolant Recovery Reservoir Replacement

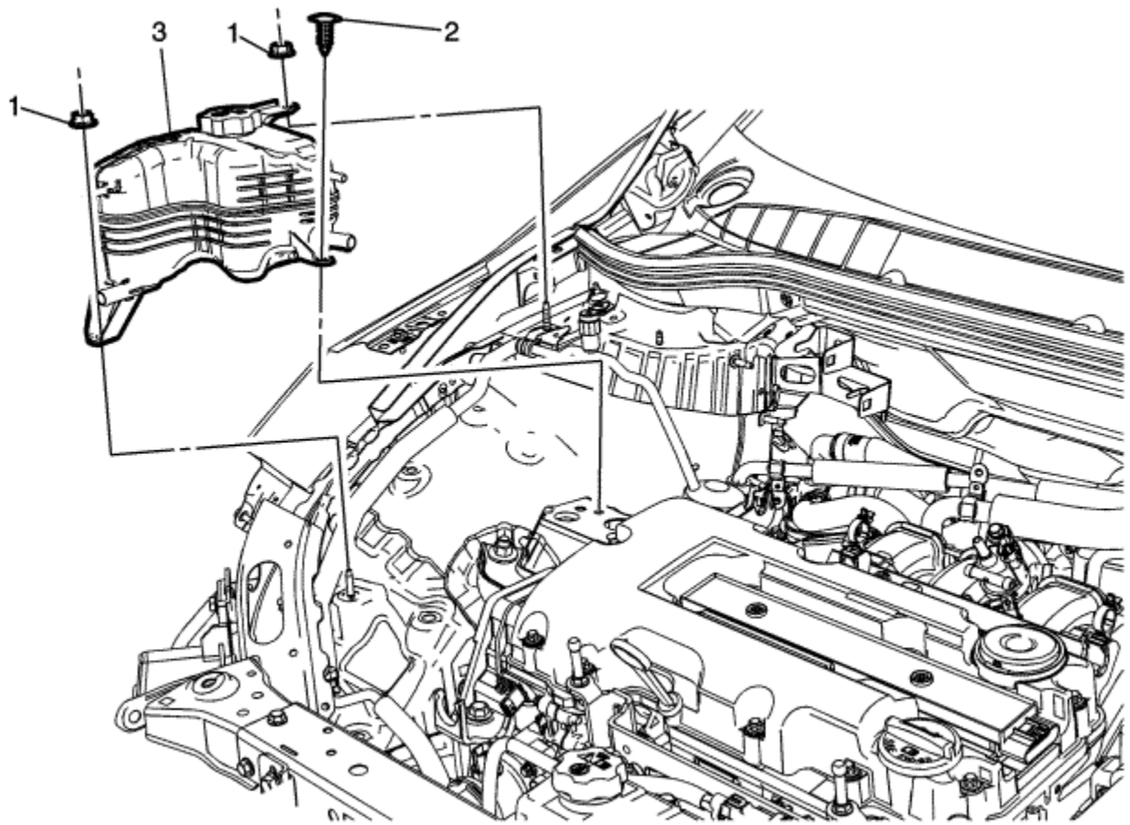

Callout	Component Name
Preliminary Procedure	

1. Drain the coolant. Refer to Cooling System Draining and Filling
2. Disconnect the heater outlet hose vapor vent hose from the reservior. Refer to Heater Outlet Hose Vapor Vent Hose Replacement
3. Disconnect the heater vent hose from the reservior. Refer to Heater Vent Hose Replacement

4. Disconnect the heater coolant heater air supply hose from the reservior. Refer to Heater Coolant Heater Air Supply Hose Replacement
5. Disconnect the heater water auxiliary pump inlet hose from the reservior. Refer to Heater Water Auxiliary Pump Inlet Hose Replacement

1	Coolant Recovery Reservoir Nuts (Qty: 2) **Caution:** Refer to Fastener Caution in the Preface section. **Tighten** 9 N·m (80 lb in)
2	Coolant Recovery Reservoir Retainer
3	Coolant Recovery Reservoir

© Copyright Chevrolet. All rights reserved

Radiator Inlet Hose Replacement

Special Tools

BO-38185 Hose Clamp Pliers

For equivalent regional tools, Refer toSpecial Tools

Removal Procedure

Note: Replace corroded hose clamps and brackets.

1. Drain the cooling system. Refer to Cooling System Draining and Filling
2. Remove the air cleaner resonator outlet duct. Refer to Air Cleaner Resonator Outlet Duct Replacement

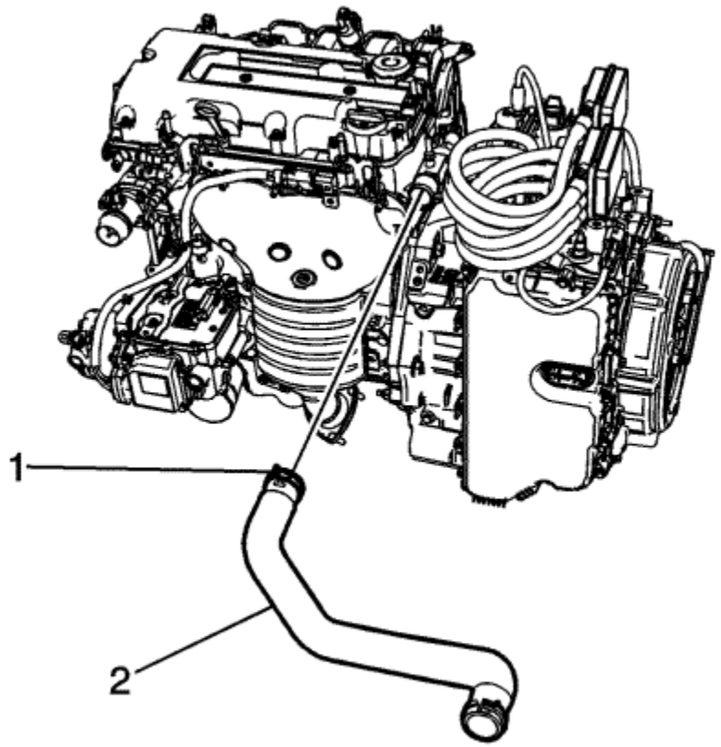

3. Remove the radiator inlet hose clamp (1) at the engine using *BO-38185* Hose Clamp Pliers .
4. Remove the radiator inlet hose (2) from the engine.

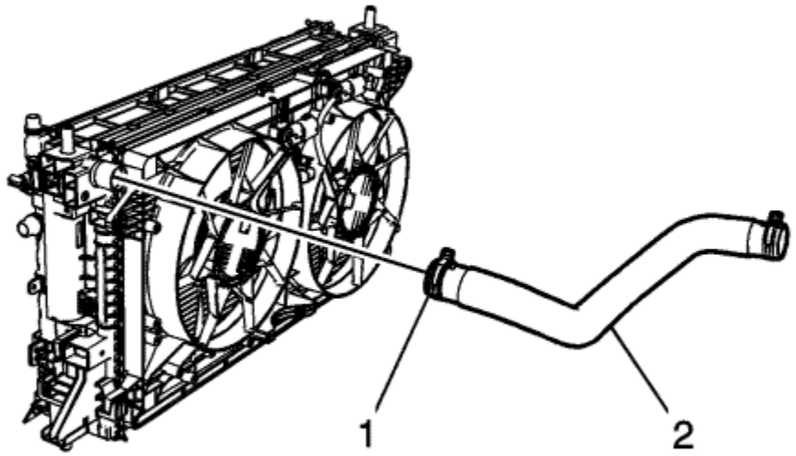

5. Remove the radiator inlet hose clamp (1) at radiator using *BO-38185* Hose Clamp Pliers .
6. Remove the radiator inlet hose (2) from the radiator.
7. Remove the radiator inlet hose from the vehicle.

Installation Procedure

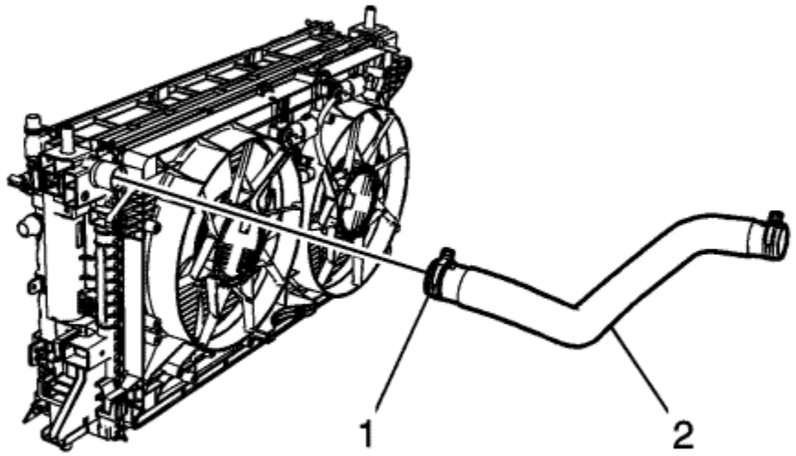

1. Install the radiator inlet hose to the vehicle.
2. Install the radiator inlet hose (2) to the radiator .
3. Install the radiator inlet hose clamp (1) at radiator using *BO-38185* Hose Clamp Pliers .

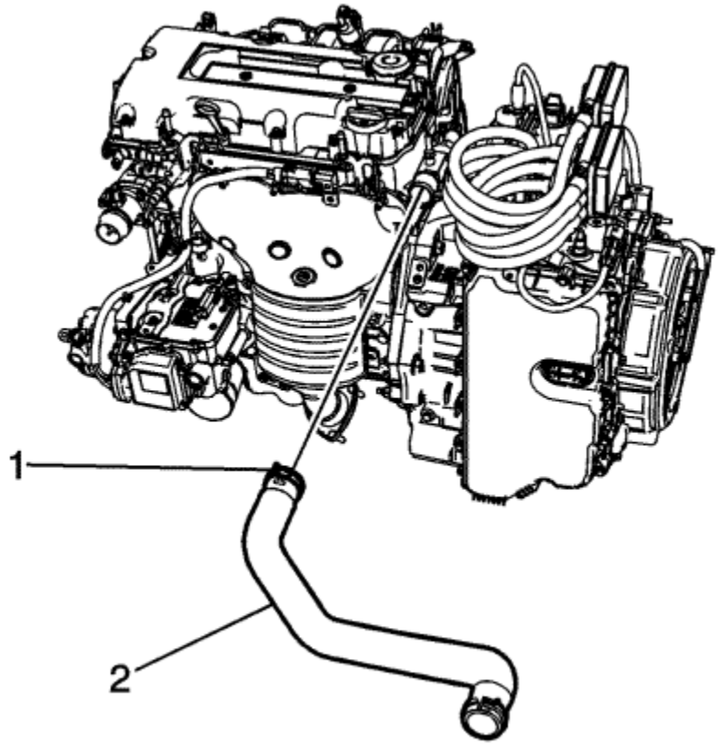

4. Install the radiator inlet hose (2) to the engine.
5. Install the radiator inlet hose clamp (1) at engine using *BO-38185* Hose Clamp Pliers .
6. Install the air cleaner resonator outlet duct. Refer to Air Cleaner Resonator Outlet Duct Replacement
7. Fill the cooling system. Refer to Cooling System Draining and Filling

© Copyright Chevrolet. All rights reserved

Radiator Outlet Front Hose Replacement

Special Tools

BO-38185 Hose Clamp Pliers

For equivalent regional tools, Refer toSpecial Tools

Removal Procedure

Note: Replace corroded hose clamps and brackets.

1. Remove the air cleaner resonator outlet duct. Refer to Air Cleaner Resonator Outlet Duct Replacement
2. Remove the heater coolant heater air supply hose from the radiator outlet front hose. Refer to Heater Coolant Heater Air Supply Hose Replacement

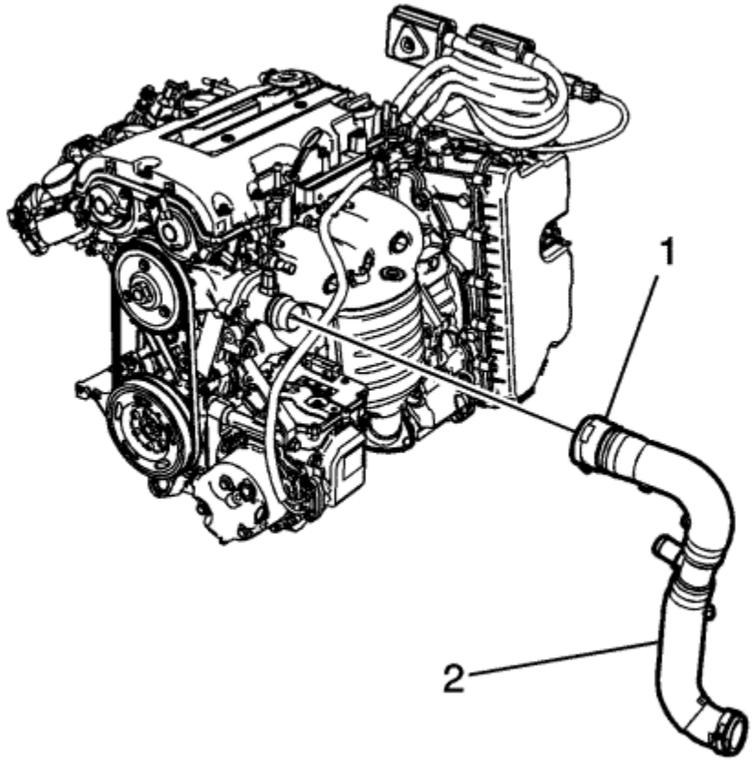

3. Disconnect the radiator outlet front hose quick connect (1) at engine.
4. Remove the radiator outlet front hose (2) from the engine.

   Danger: Do not use a service jack in locations other than those specified to lift this vehicle. Lifting the vehicle with a jack in those other locations could cause the vehicle to slip off the jack and roll; this could cause injury or death.

5. Raise and support the vehicle. Refer to Lifting and Jacking the Vehicle

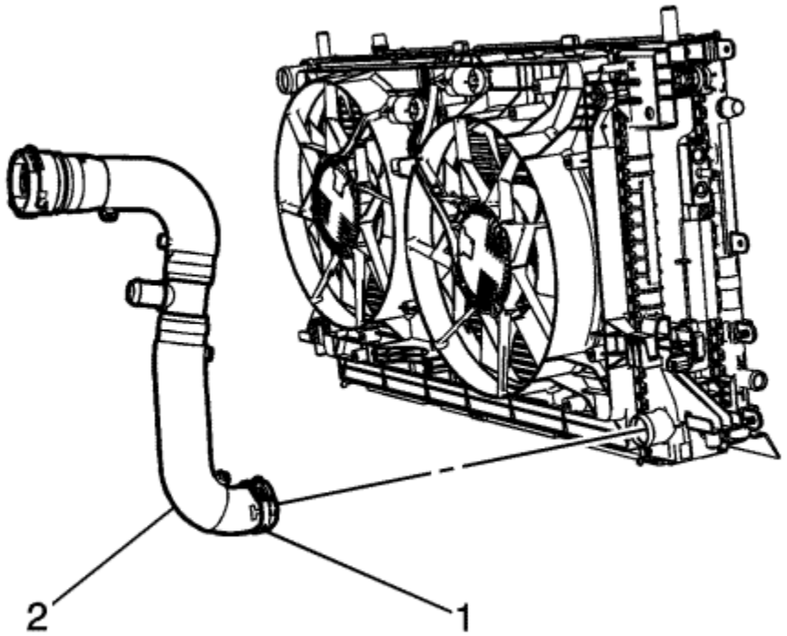

6. Remove the radiator outlet front hose clamp (1) at radiator using *BO-38185* Hose Clamp Pliers .
7. Remove the radiator outlet front hose (2) from the radiator.
8. Remove the radiator outlet front hose from the vehicle.

Installation Procedure

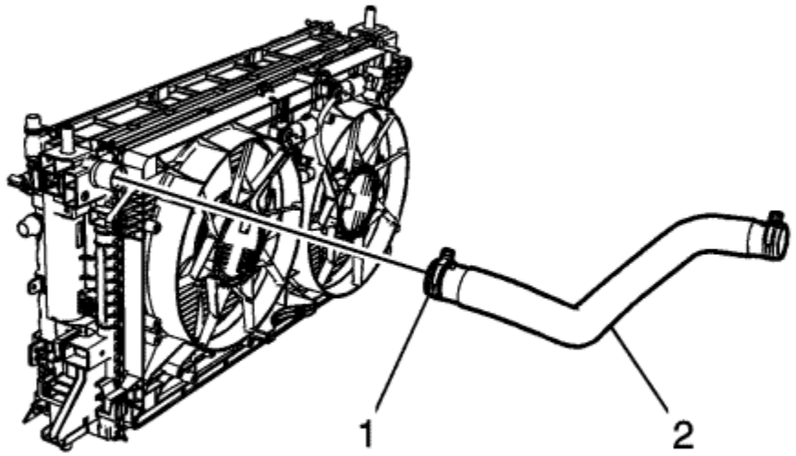

1. Install the radiator outlet front hose to the vehicle.
2. Install the radiator outlet front hose (2) to the radiator.
3. Install the radiator outlet front hose clamp (1) at radiator using *BO-38185* Hose Clamp Pliers .

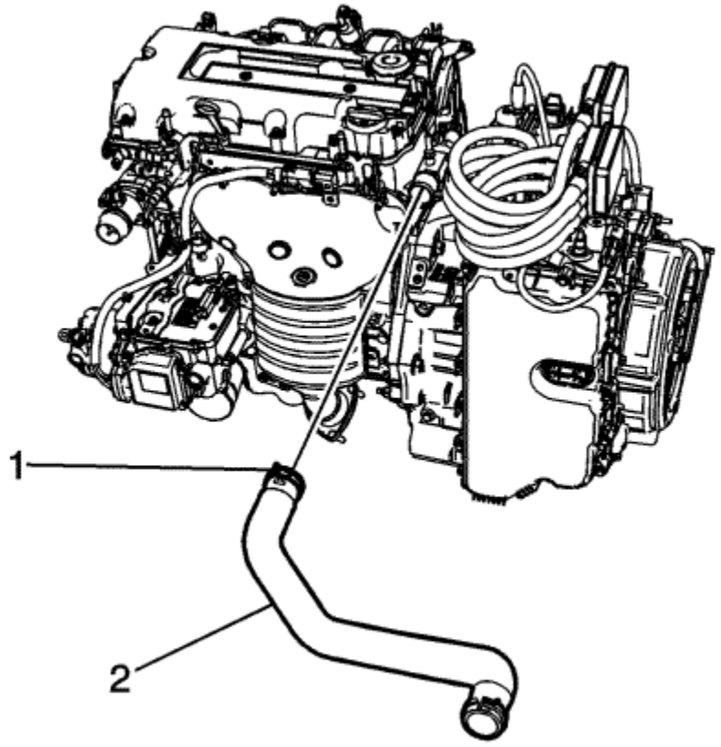

4. Install the radiator outlet front hose (2) to the engine.
5. Connect the radiator outlet front hose quick connect (1) at engine.
6. Lower the vehicle.
7. Install the heater coolant heater air supply hose to the radiator outlet front hose. Refer to Heater Coolant Heater Air Supply Hose Replacement
8. Remove the air cleaner resonator outlet duct. Refer to Air Cleaner Resonator Outlet Duct Replacement
9. Fill the cooling system. Refer to Cooling System Draining and Filling

© Copyright Chevrolet. All rights reserved

Radiator Upper Bracket Replacement

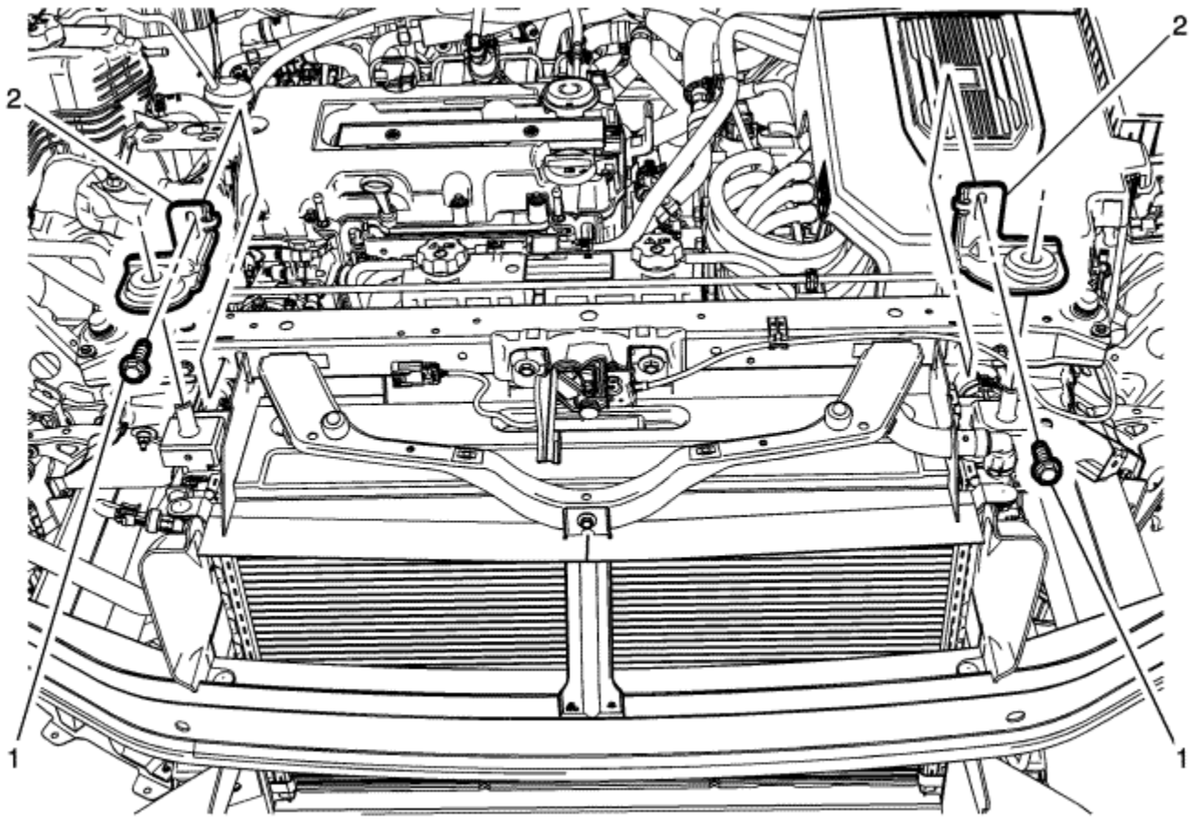

Callout	Component Name
Preliminary Procedure Remove front compartment front sight shield. Refer to Front Compartment Front Sight Shield Replacement : Volt → Ampera	
	Radiator Upper Bracket Bolt (Qty 2)

1	**Caution:** Refer to Fastener Caution in the Preface section. **Tighten** 22 N·m (16 lb ft)
2	Radiator Upper Bracket (Qty 2)

© Copyright Chevrolet. All rights reserved

Cooling Fan and Shroud Replacement

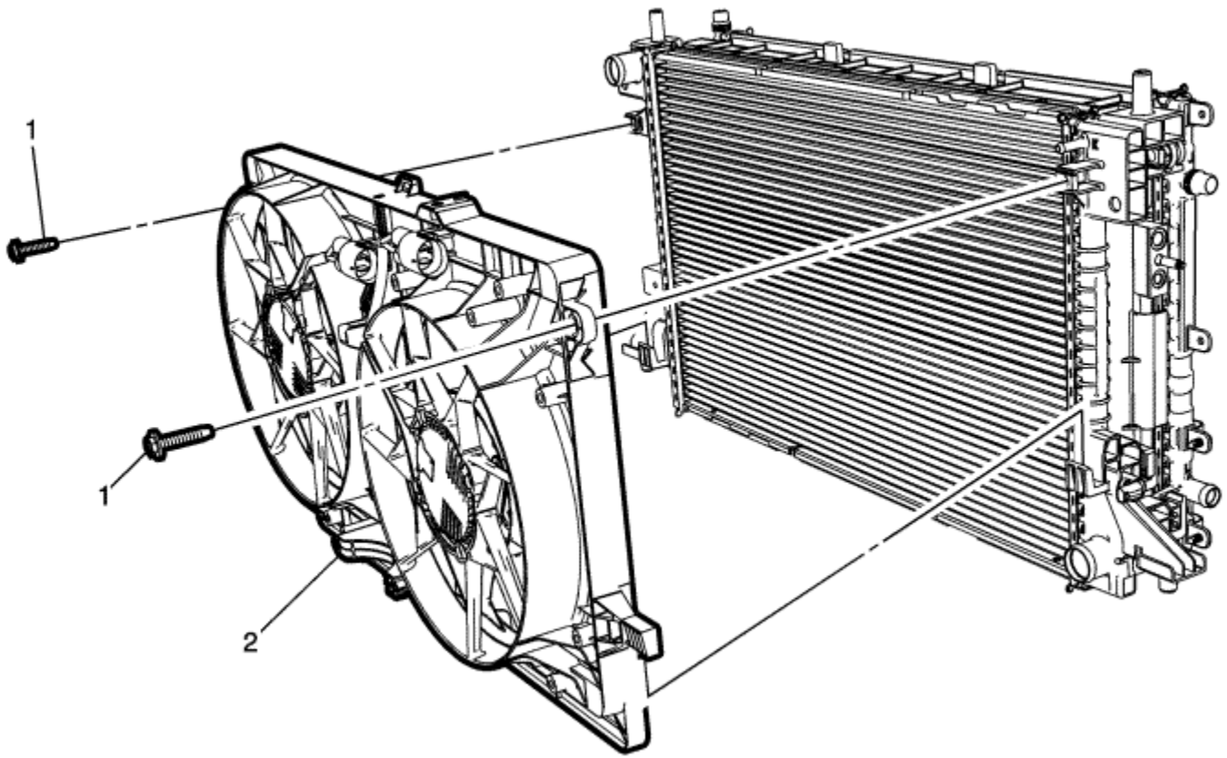

Callout	Component Name
Preliminary Procedure	

1. Remove the drive motor battery radiator surge tank. Refer to Drive Motor Battery Radiator Surge Tank Replacement
2. Remone the drive motor battery coolant pump. Refer to Drive Motor Battery Coolant Pump Replacement
3. Disconnect the electrical connector from the coolant fans.

4. Disconnect all wire retainers from shroud.

1	Cooling Fan and Shroud Bolts (Qty: 2). **Caution:** Refer to Fastener Caution in the Preface section. **Tighten** 5 N·m (44 lb in)
2	Cooling Fan and Shroud

© Copyright Chevrolet. All rights reserved

Engine Coolant Thermostat Replacement

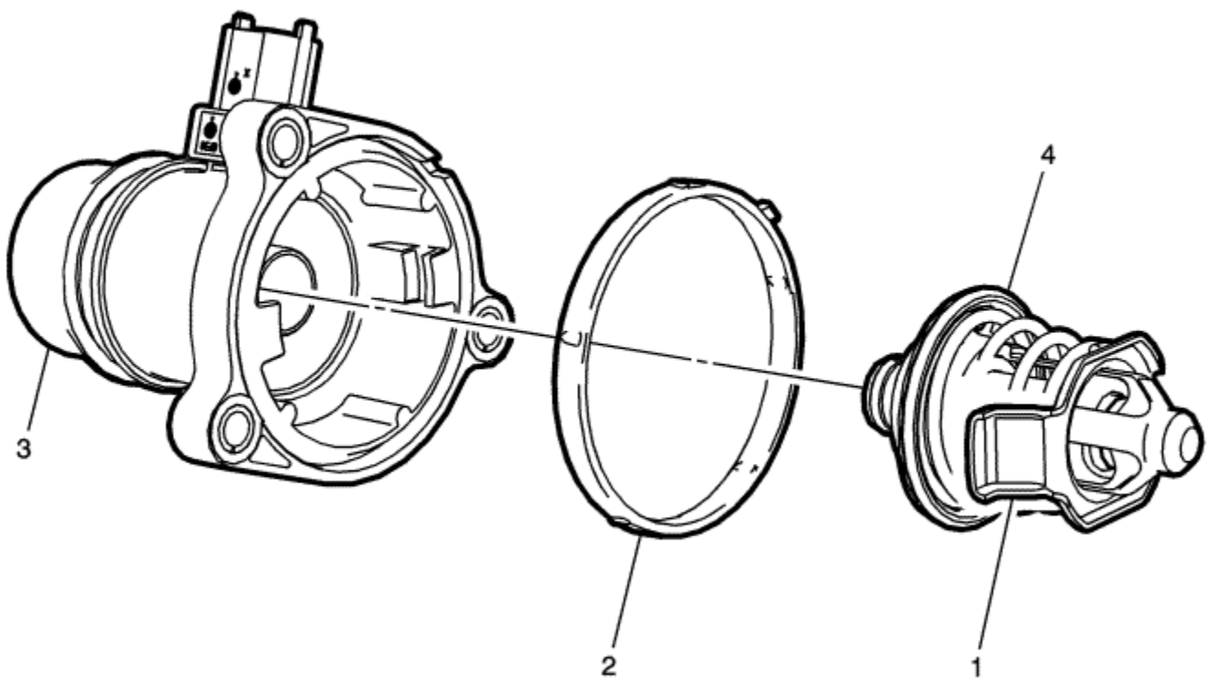

Callout	Component Name
Preliminary Procedures 1. Drain the cooling system. Refer to Cooling System Draining and Filling . 2. Remove the water inlet pipe. Refer to Water Inlet Replacement	

1	Thermostat Retainer Tab
2	Seal **Tip** Inspect the seal for damage, replace as necessary.
3	Water Inlet Pipe
4	Thermostat (Part of water inlet assembly) **Procedure** Push in on the thermostat tabs (1) to unclip the thermostat from the water inlet pipe (3), and rotate clockwise.

© Copyright Chevrolet. All rights reserved

Engine Coolant Air Bleed Hose Connector Replacement

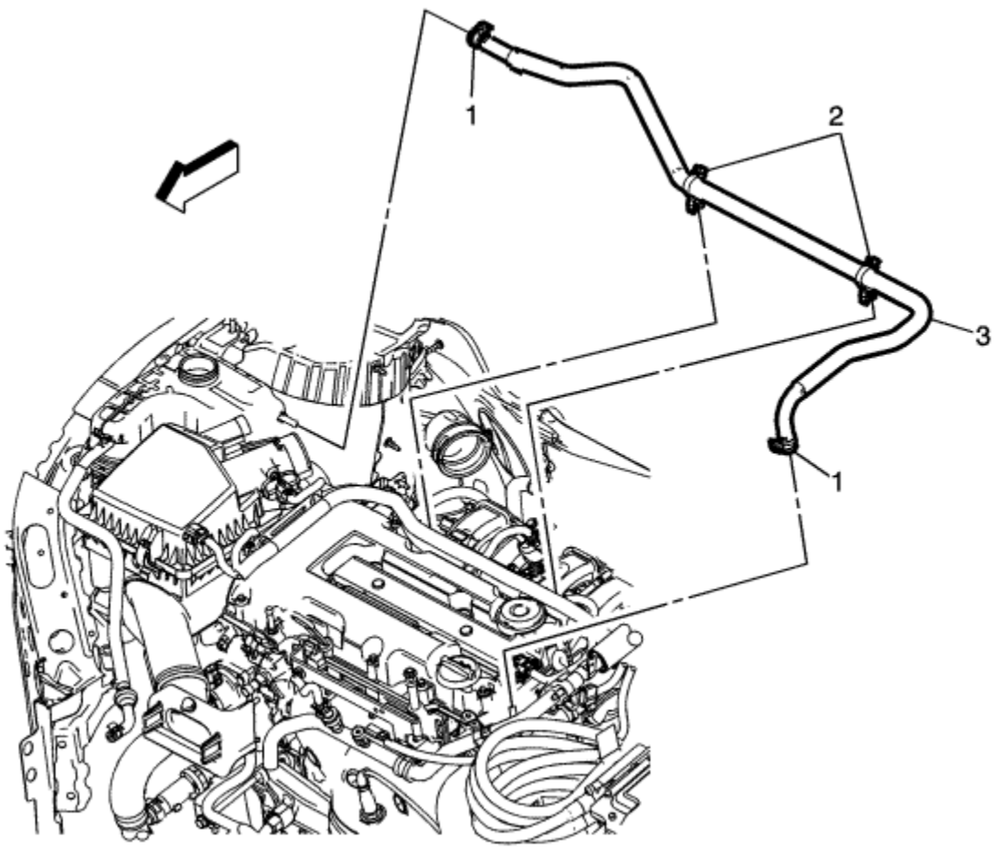

Callout	Component Name
Preliminary Procedures 1. Drain the cooling system. Refer to Cooling System Draining and Filling . 2. Remove the air cleaner resonator outlet duct. Refer to Air Cleaner Resonator Outlet Duct Replacement .	

1	Engine Coolant Air Bleed Hose Clamps (Qty 2) **Procedure** Reposition the engine coolant air bleed hose clamps using *BO 38185* Hose Clamp Pliers **Special Tools** *BO 38185* Hose Clamp Pliers For equivalent regional tools, Refer to Special Tools
2	Retainer Clips (Qty 2)
3	Engine Coolant Air Bleed Hose **Tip** Replace corroded hose clamps and brackets.

© Copyright Chevrolet. All rights reserved

Water Outlet Replacement

Removal Procedure

1. Drain the cooling system. Refer to Cooling System Draining and Filling .
2. Remove the air cleaner resonator outlet duct. Refer to Air Cleaner Resonator Outlet Duct Replacement .

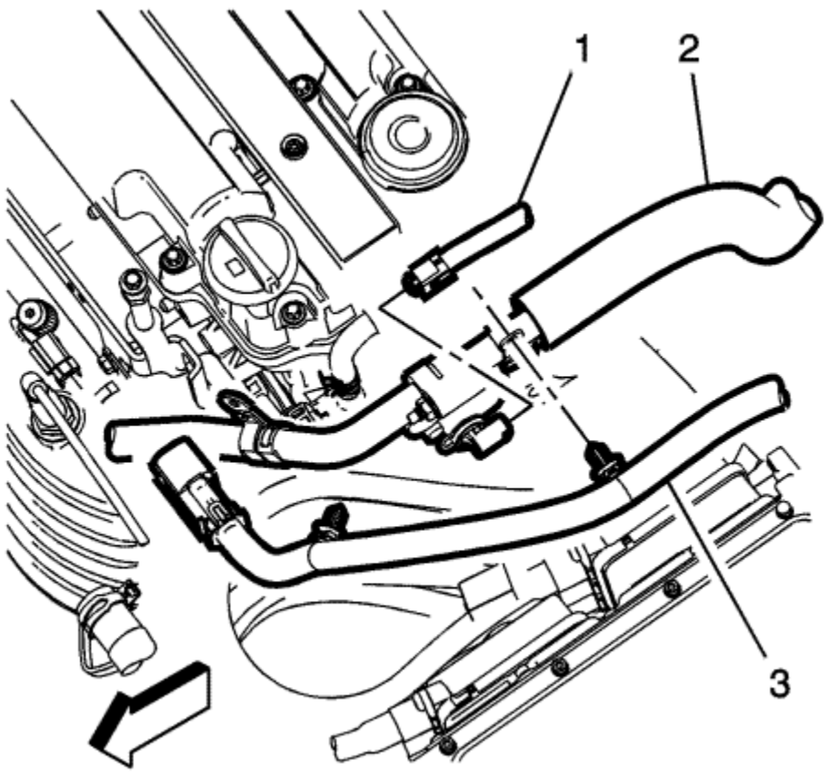

3. Disconnect the engine coolant temperature sensor (ECT) connector (1).

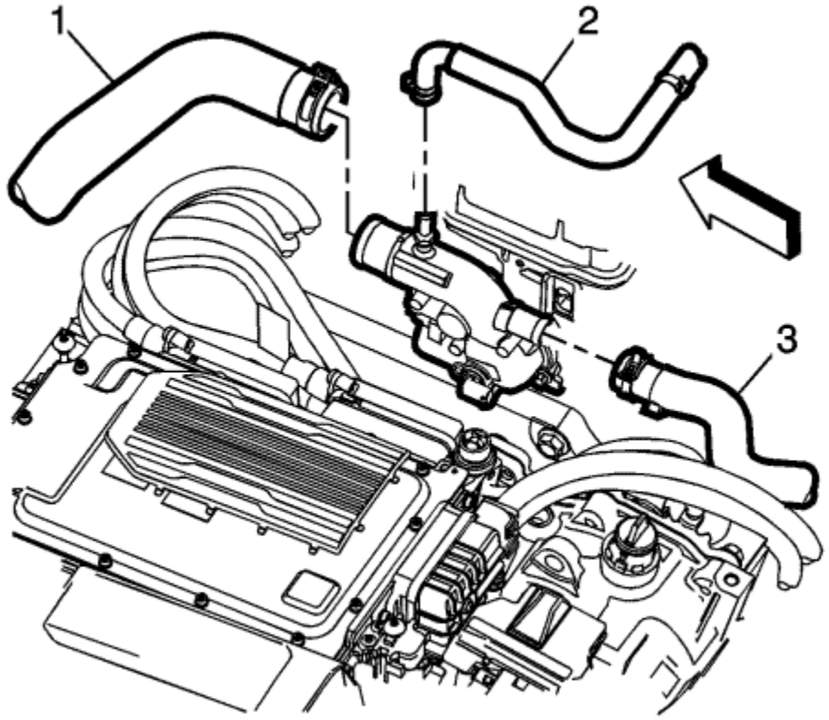

4. Disconnect the radiator inlet hose (1), the engine coolant air bleed hose (2) and the heater outlet hose (3), from the water outlet.

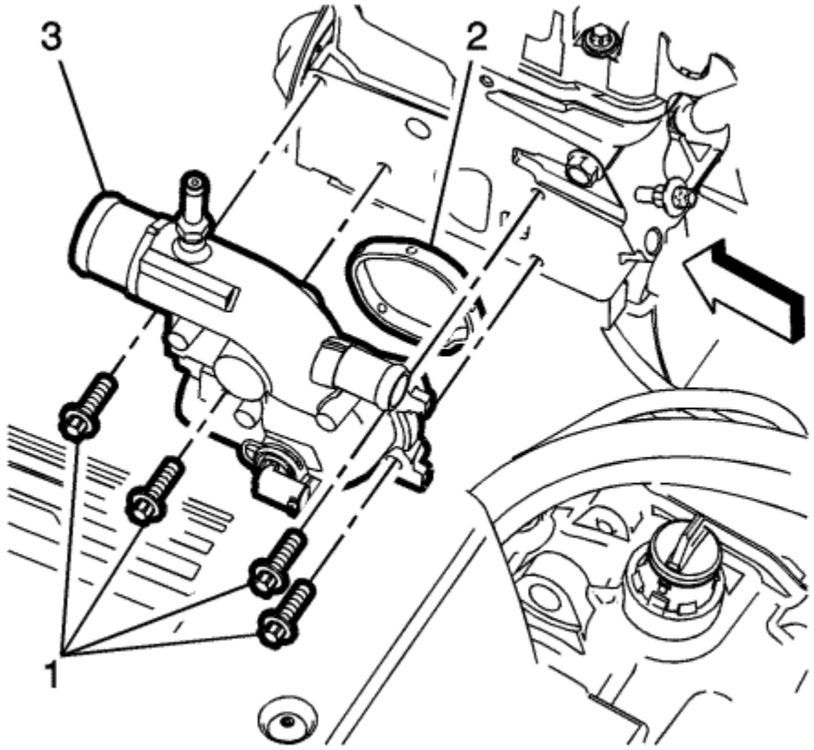

5. Remove the water outlet bolts (1).
6. Remove the water outlet (3) and discard the seal (2).

Installation Procedure

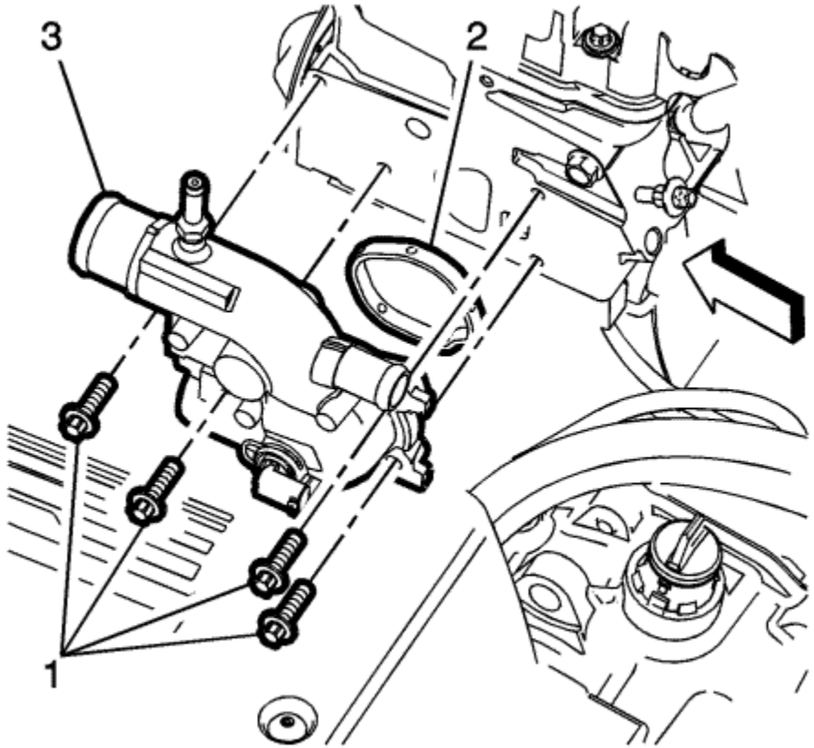

1. Position the water outlet (3) and a NEW seal (2) , to the cylinder head.

   Caution: Refer to Fastener Caution in the Preface section.

2. Install the water outlet bolts (1) and tighten to **8 N·m (71 lb in).**

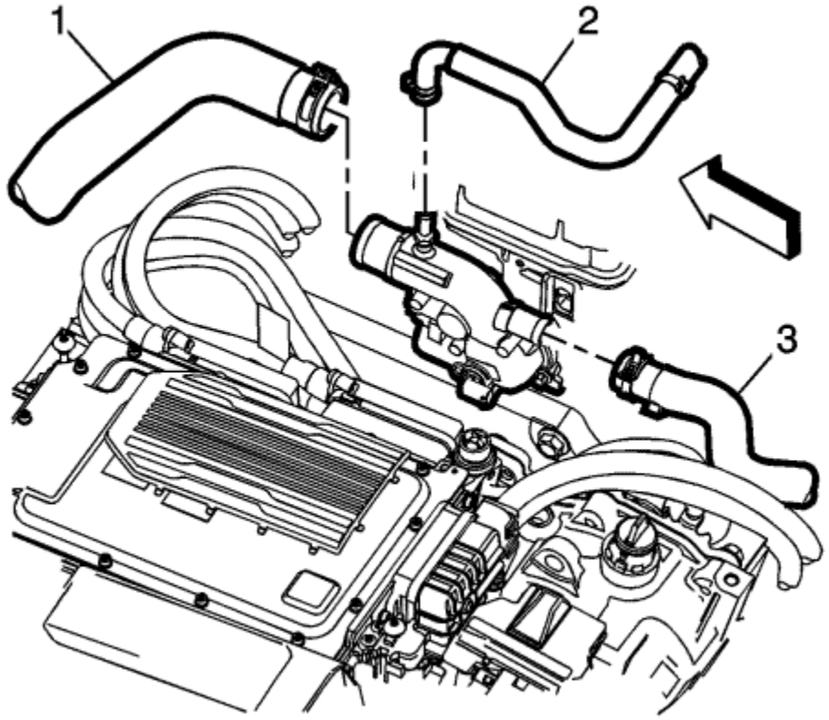

3. Install the A/C compressor front hose, if necessary. Refer to Air Conditioning Compressor Front Hose Replacement .

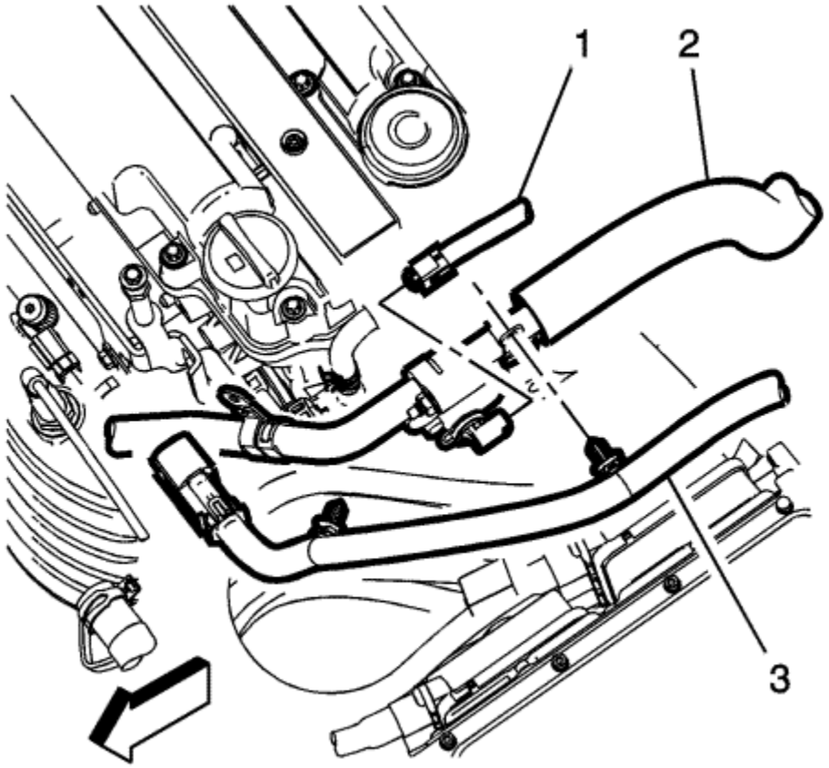

4. Install the engine coolant temperature sensor (1) and the battery positive cable (3), to the A/C compressor hose (2).
5. Install the air cleaner resonator outlet duct. Refer to Air Cleaner Resonator Outlet Duct Replacement .
6. Fill the radiator coolant system. Refer to Cooling System Draining and Filling .
7. Start the engine and check for coolant leaks.

© Copyright Chevrolet. All rights reserved

Water Inlet Replacement

Removal Procedure

1. Drain coolant fluid. Refer to Cooling System Draining and Filling .
2. Remove the air cleaner assembly. Refer to Air Cleaner Assembly Replacement .

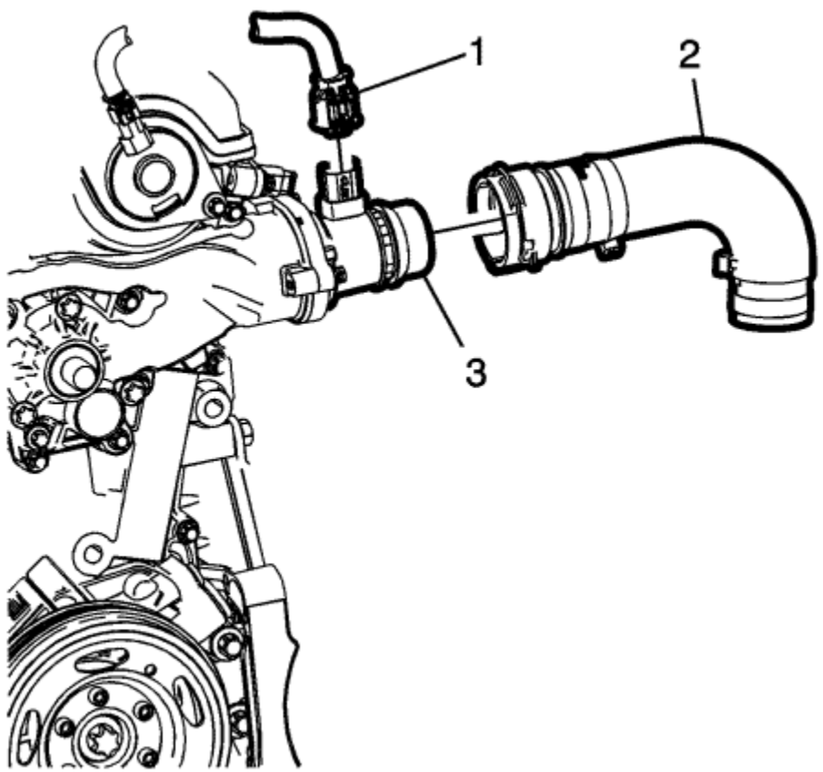

3. Remove the radiator inlet hose (2) and disconnect the engine coolant temperature sensor connector (1), from the water inlet pipe (3).

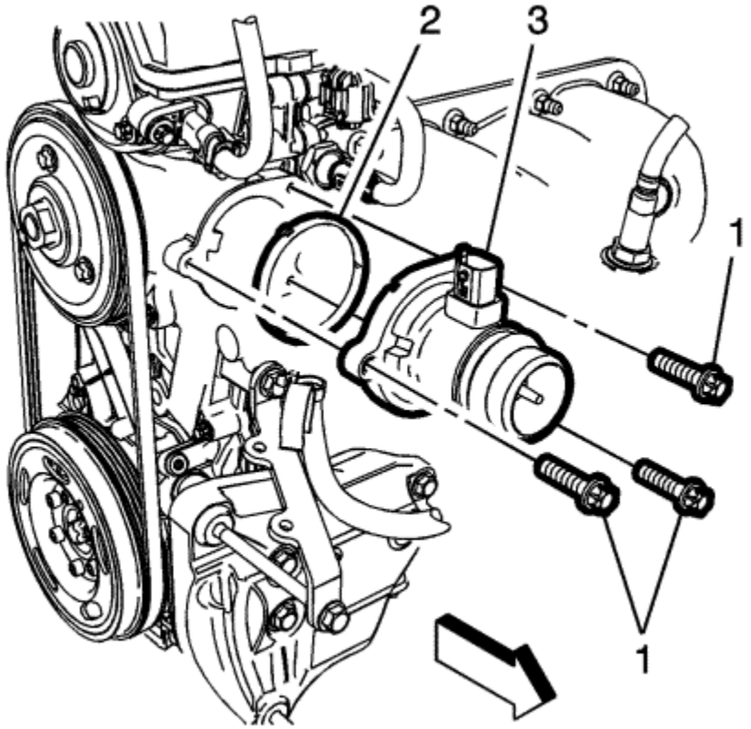

4. Remove the water inlet pipe bolts (1).
5. Inspect the seal (2) and replace as necessary.

Installation Procedure

1. Clean the sealing surfaces.

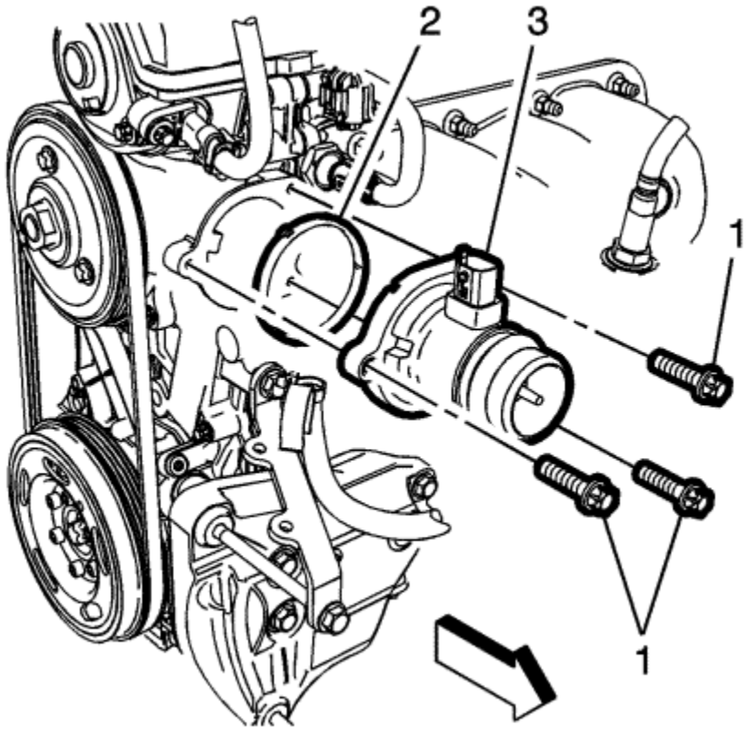

2. Install the water inlet pipe (3) and seal (2).

   Caution: Refer to Fastener Caution in the Preface section.

3. Tighten the water inlet pipe bolts (1) to **8 N·m (71 lb in)**.

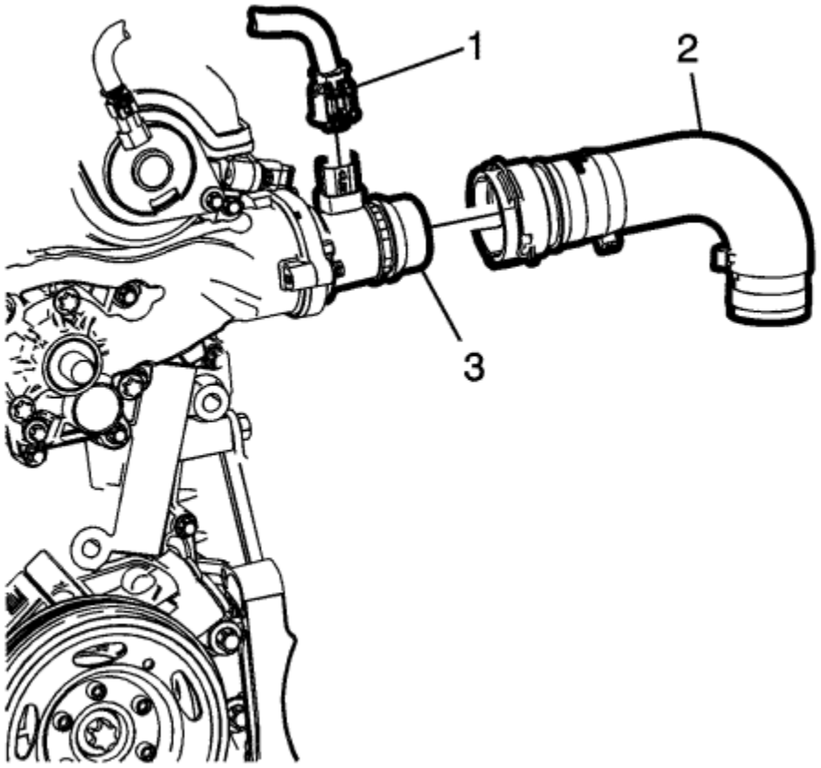

4. Connect the engine coolant temperature sensor (1) and the radiator inlet hose (2).
5. Install the air cleaner assembly. Refer to Air Cleaner Assembly Replacement .
6. Fill up the coolant fluid. Refer to Cooling System Draining and Filling .
7. Start the engine and check for coolant leaks.

© Copyright Chevrolet. All rights reserved

Water Pump Belt Replacement

Removal Procedure

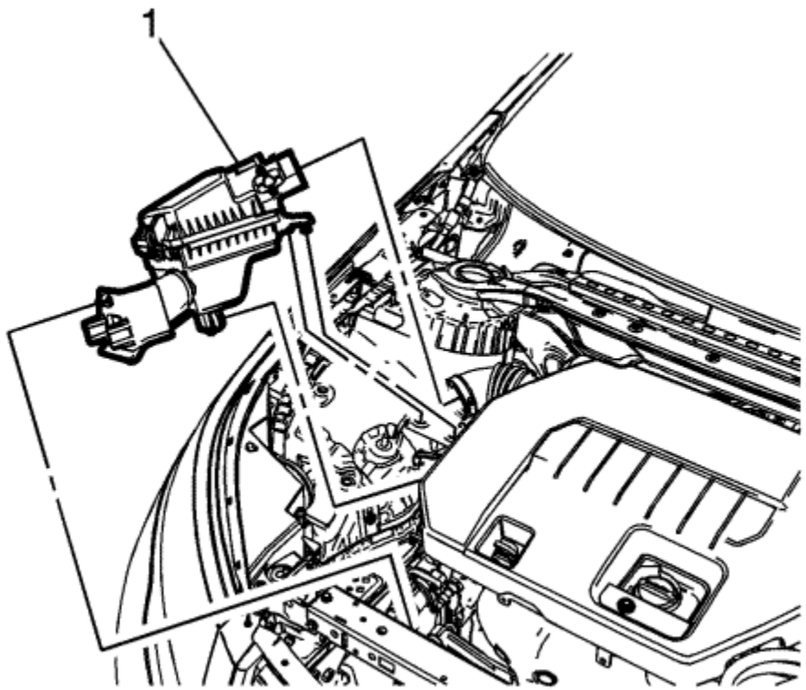

1. Remove the air cleaner assembly (1). Refer to Air Cleaner Assembly Replacement
2. Install the engine support fixture. Refer to Engine Support Fixture

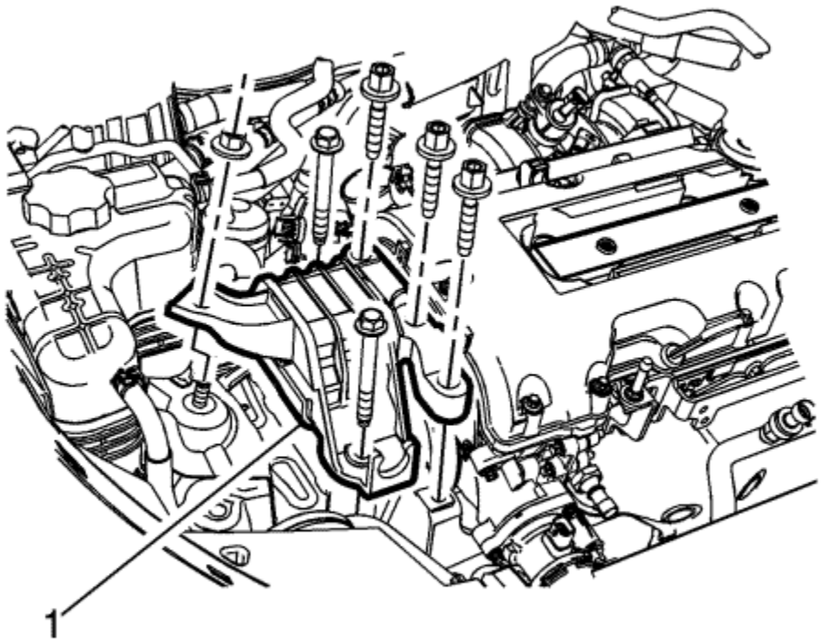

3. Remove the right engine mount (1). Refer to Engine Mount Replacement - Right Side

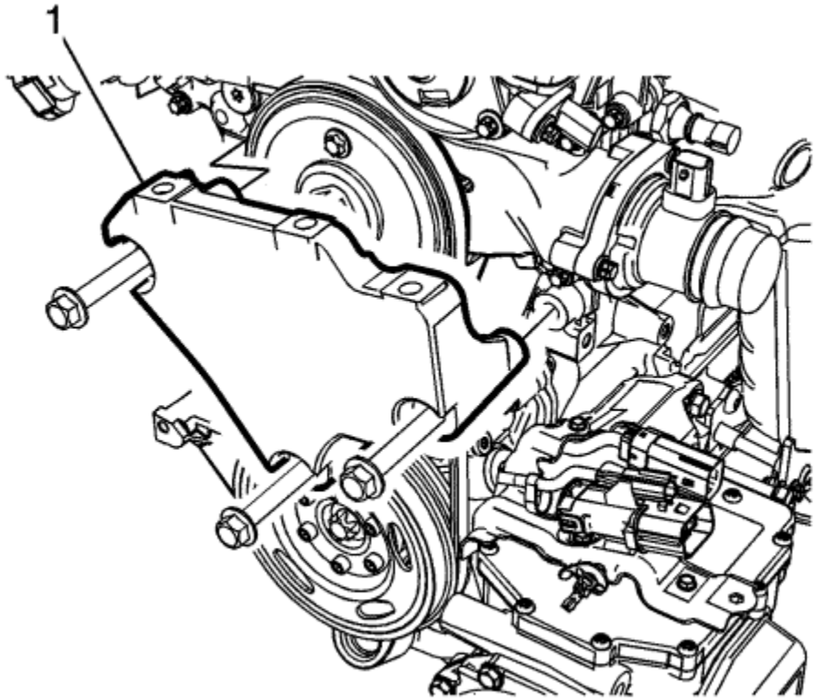

4. Remove the right engine mount bracket (1). Refer to Engine Mount Bracket Replacement - Right Side

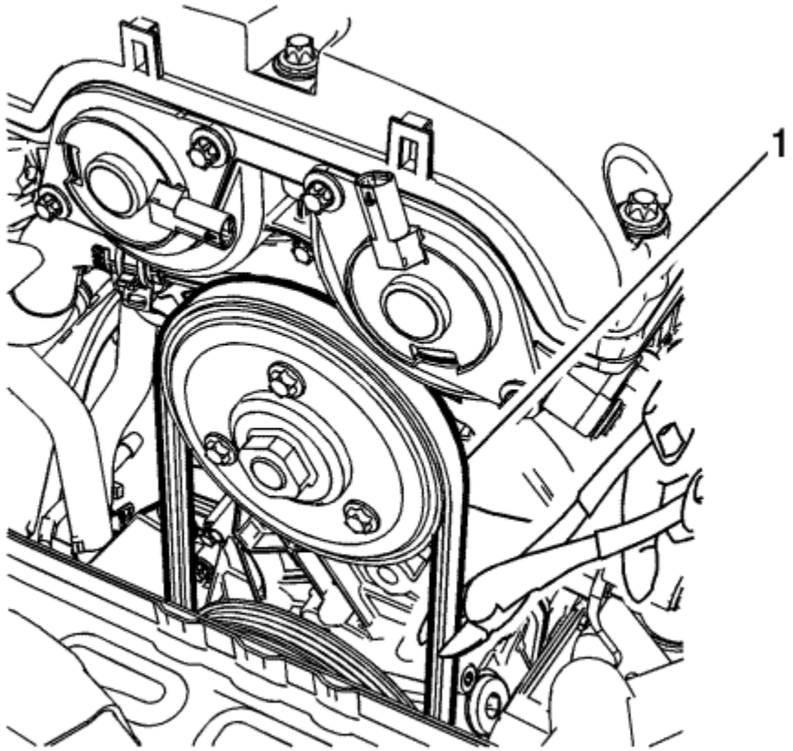

5. Cut the water pump belt (1) with a appropriate cutting tool as shown.
6. Remove and discard the water pump belt.

Installation Procedure

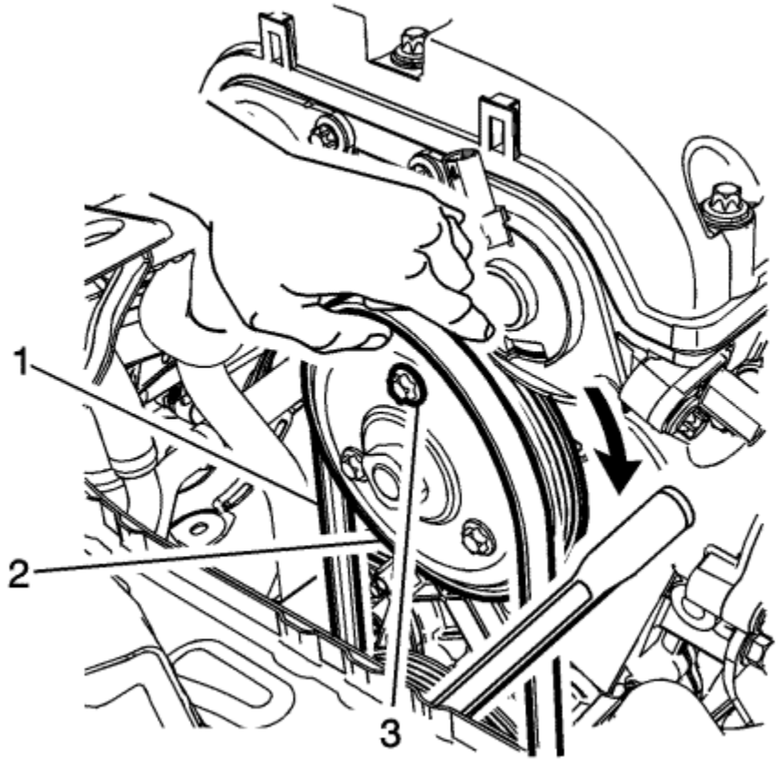

Note: Position the water pump pulley (2) as shown. The position of the pulley bolts (3) will help prevent the belt from catching on the bolts and provide ease of installation.

1. Position a NEW water pump belt (1) on the crankshaft pulley and water pump pulley (2) as shown.

   Note: Using the thumb of your free hand, hold the water pump belt on the water pump pulley. Push the belt onto the pulley with your thumb while rotating the crankshaft pulley.

2. Using a socket and ratchet on the crankshaft pulley bolt, rotate the crankshaft in the direction of the arrow until the belt is fully installed on the water pump pulley.
3. After the belt is on the water pump pulley, rotate the crankshaft an additional complete revolution and ensure the water pump belt is fully seated on the crankshaft and water pump pulleys.

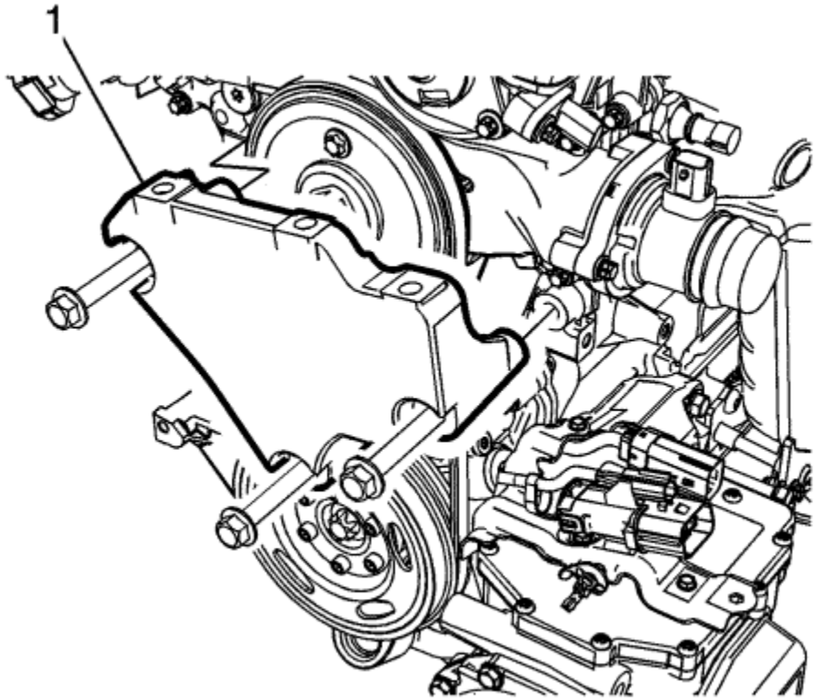

4. Install the right engine mount bracket (1). Refer to Engine Mount Bracket Replacement - Right Side .

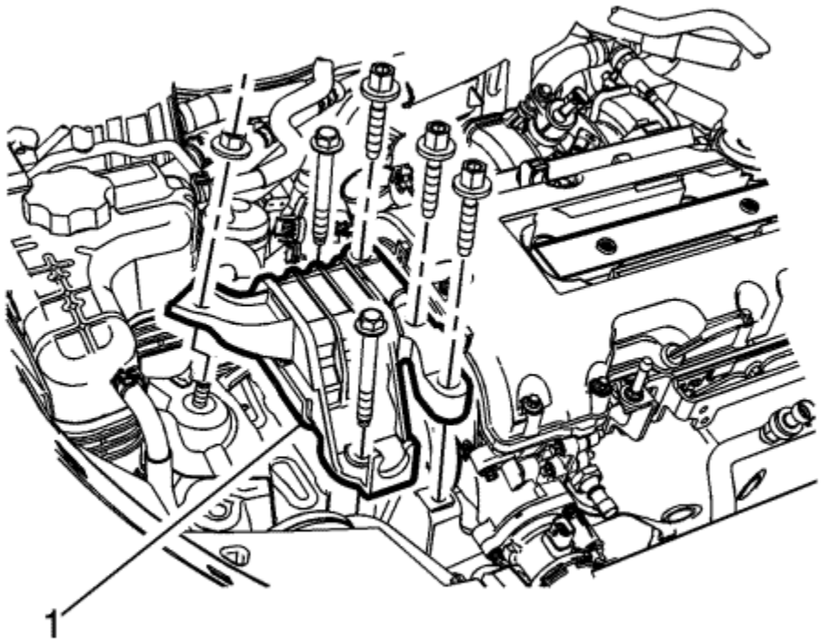

5. Install the right engine mount (1). Refer to Engine Mount Replacement - Right Side .
6. Remove the engine support fixture.

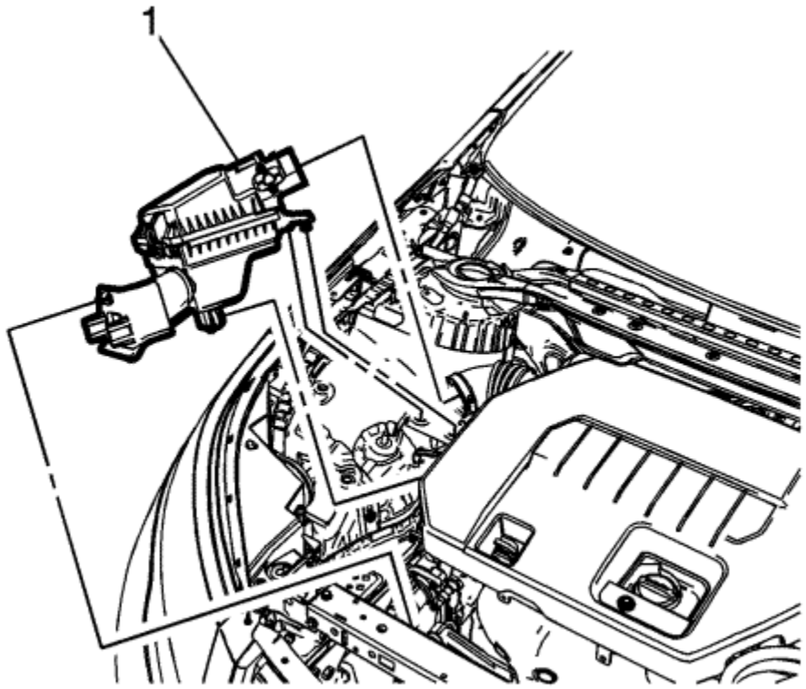

7. Install the air cleaner assembly (1). Refer to Air Cleaner Assembly Replacement

© Copyright Chevrolet. All rights reserved

Water Pump Replacement

Removal Procedure

1. Drain coolant fluid. Refer to Cooling System Draining and Filling .
2. Remove the water pump pulley. Refer to Water Pump Pulley Replacement .

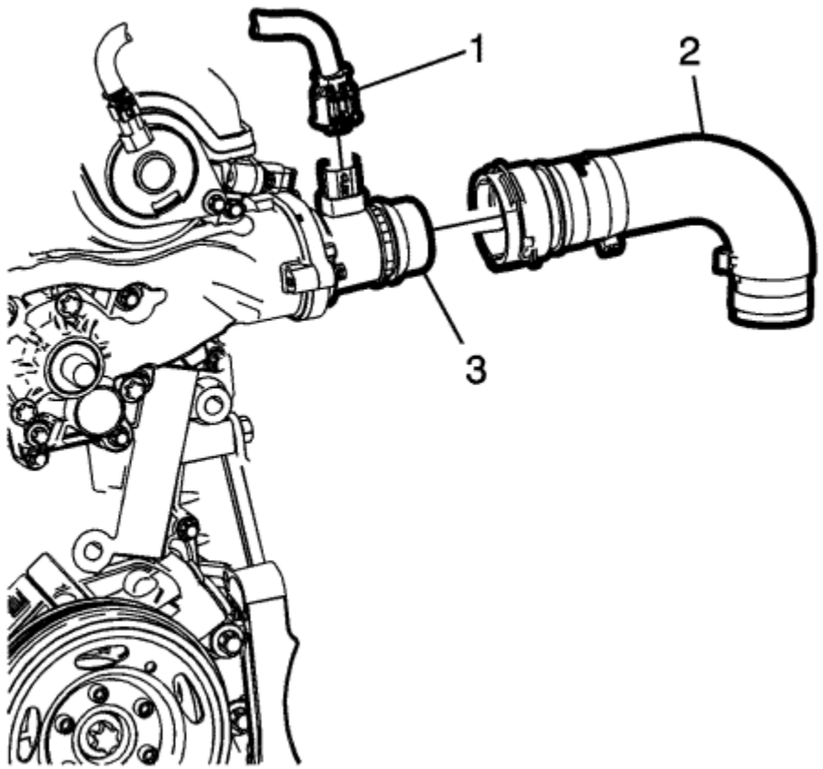

3. Remove the radiator inlet hose (2) and the engine coolant temperature sensor connector (1), from the water inlet pipe (3).

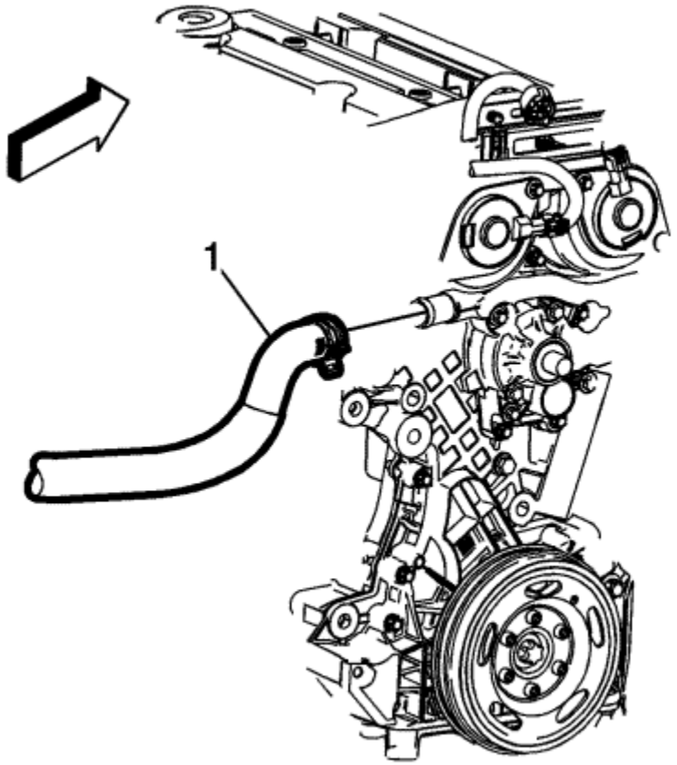

4. Remove the heater water shutoff hose (1).

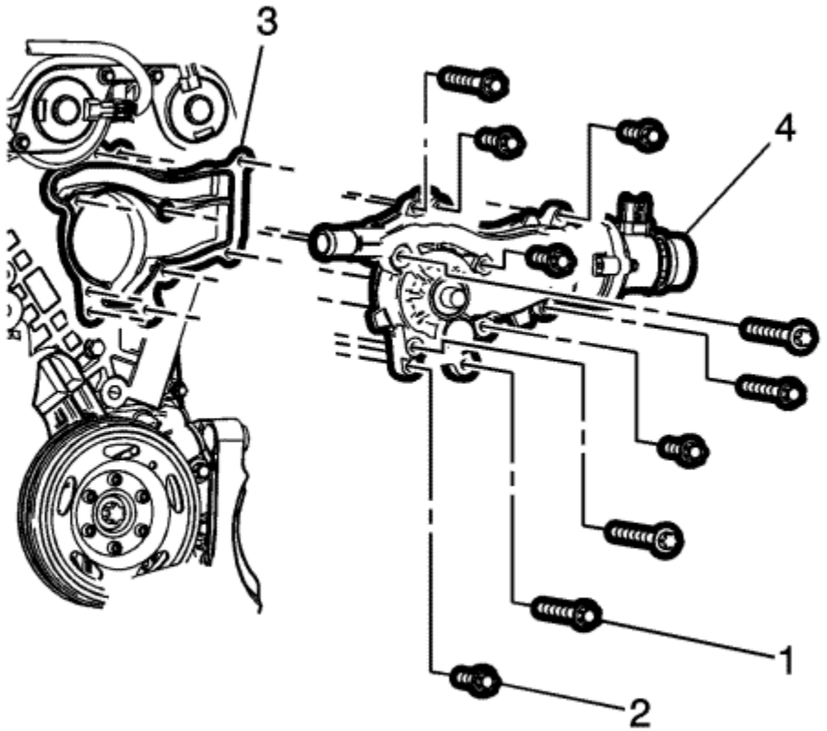

5. Remove the 5 short water pump bolts (2) and the 5 long water pump bolts (1).
6. Remove the water pump (4).
7. Remove the water pump gasket (3).
8. If replacing the water pump, transfer the water inlet pipe and thermostat to the new water pump. Refer to Water Inlet Replacement .

Installation Procedure

1. Clean the sealing surfaces.

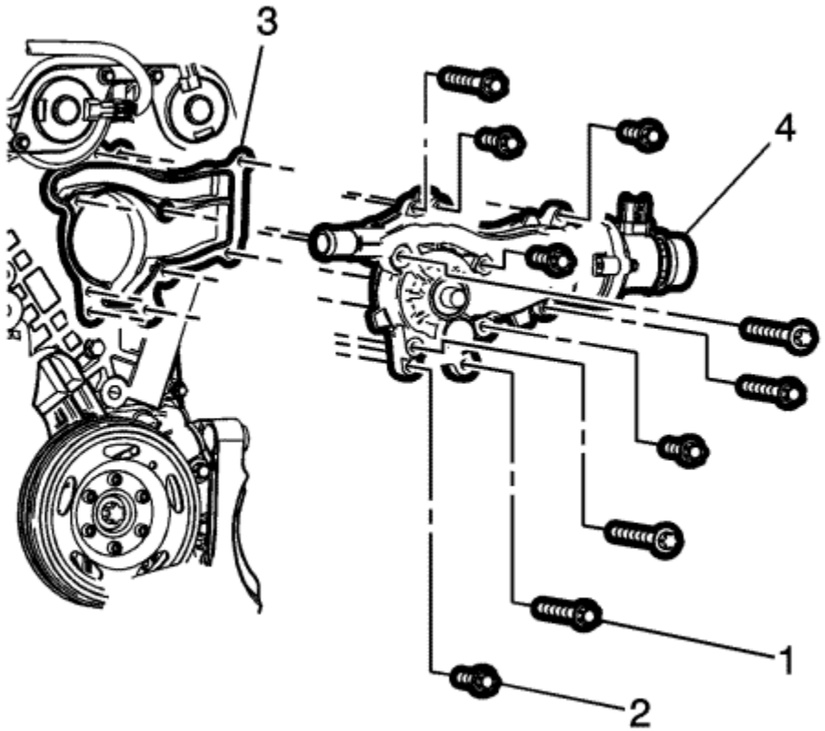

2. Install the water pump (4) and a NEW water pump gasket (3).

   Caution: Refer to Fastener Caution in the Preface section.

3. Install the 5 short water pump bolts (2) and the 5 long water pump bolts (1) and tighten in a cross sequence to **8 N·m (71 lb in)**.
4. Install the water pump pulley. Refer to Water Pump Pulley Replacement .

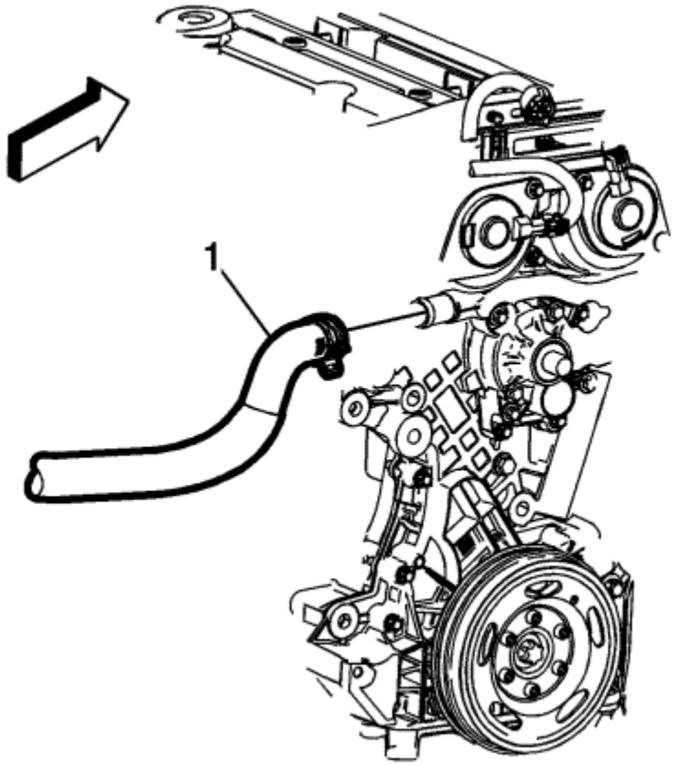

5. Install the heater water shutoff hose (1).

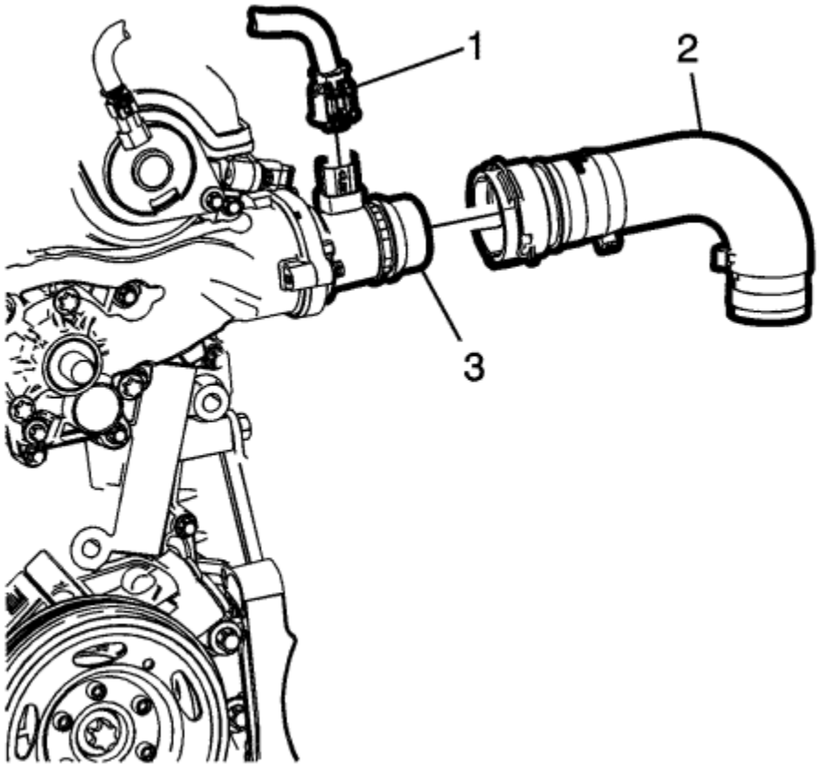

6. Install the radiator inlet hose (2) and the engine coolant temperature sensor connector (1), to the water inlet pipe (3)..
7. Fill up the coolant fluid. Refer to Cooling System Draining and Filling .
8. Start the engine and check for coolant leaks.

© Copyright Chevrolet. All rights reserved

Engine Coolant Temperature Sensor Replacement

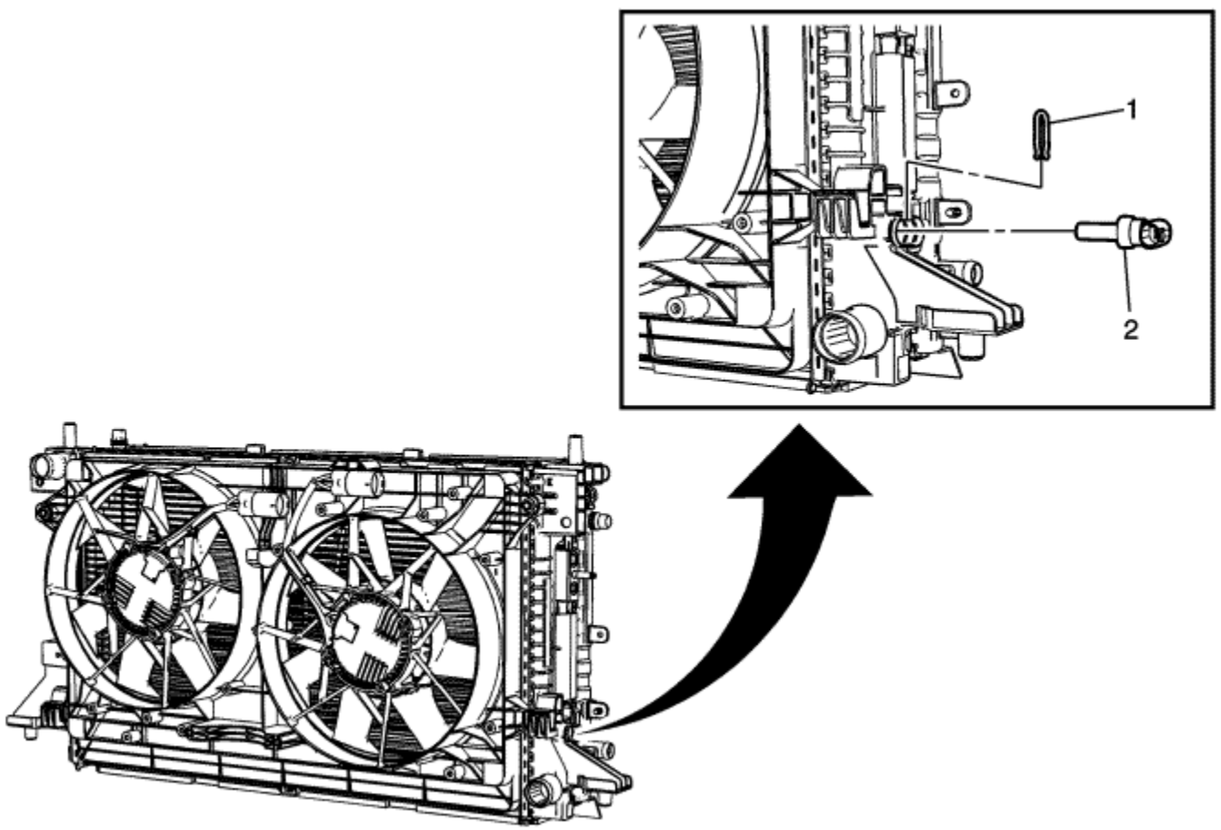

Callout	Component Name
Preliminary Procedure	

1. Drain the coolant. Refer to Cooling System Draining and Filling
2. Remove the front wheelhouse front liner on the passenger side. Refer to Front Wheelhouse Front Liner Replacement
3. Disconnect the electrical connector from the coolant temperature sensor.

1	Engine Coolant Temperature Sensor Retaining Clip.
2	Engine Coolant Temperature Sensor

© Copyright Chevrolet. All rights reserved

Radiator Replacement

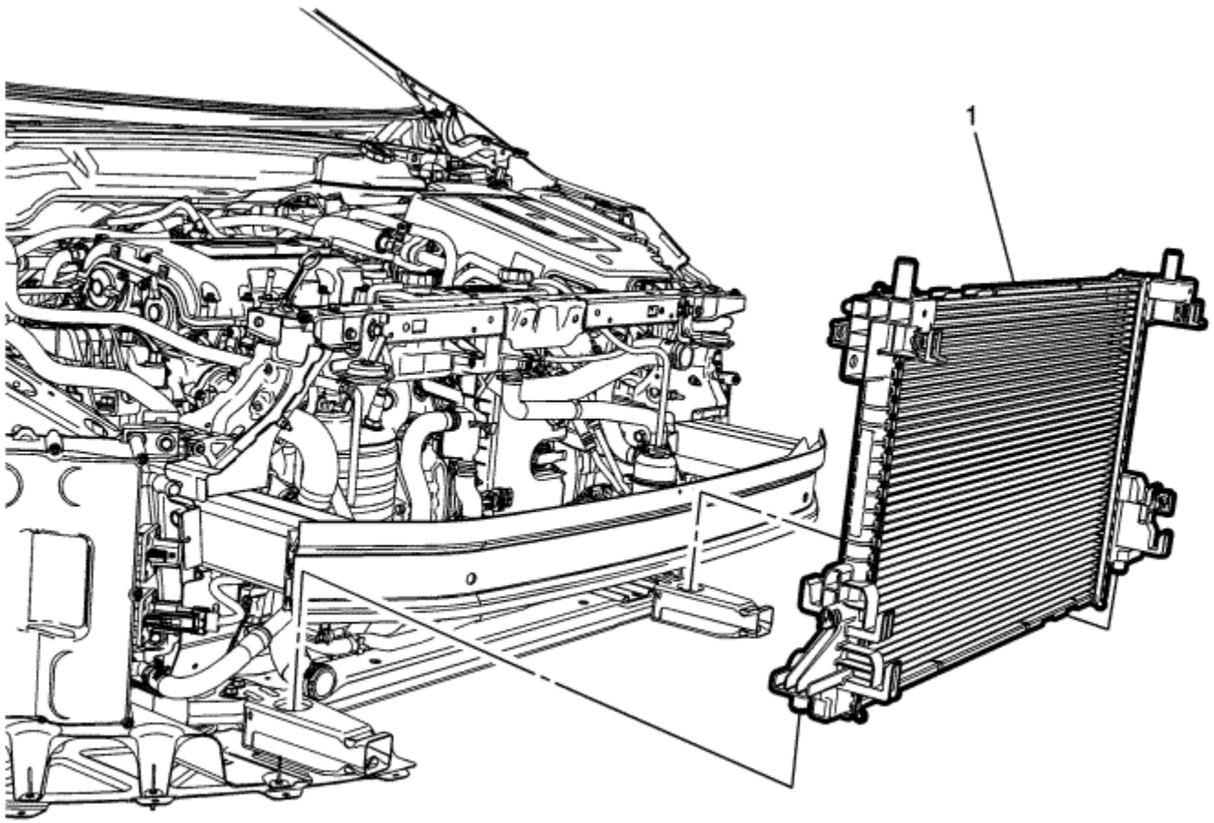

Callout	Component Name
Preliminary Procedure	

1. Drain the coolant. Refer to Cooling System Draining and Filling
2. Remove cooling fan and shroud. Refer to Cooling Fan and Shroud Replacement
3. Remove transmission fluid auxiliary cooler. Refer to Transmission Fluid Auxiliary Cooler Replacement

4. Disconnect the drive motor battery coolant/air separator from the radiator. Refer to Drive Motor Battery Coolant/Air Separator Replacement
5. Disconnect the heater vent hose from the radiator. Refer to Heater Vent Hose Replacement
6. Remove the radiator inlet hose. Refer to Radiator Inlet Hose Replacement
7. Remove radiator outlet front hose. Refer to Radiator Outlet Front Hose Replacement
8. Disconnect the electrical connector from the engine coolant temperature sensor.

1	Radiator

© Copyright Chevrolet. All rights reserved

Radiator Air Lower Baffle and Deflector Replacement

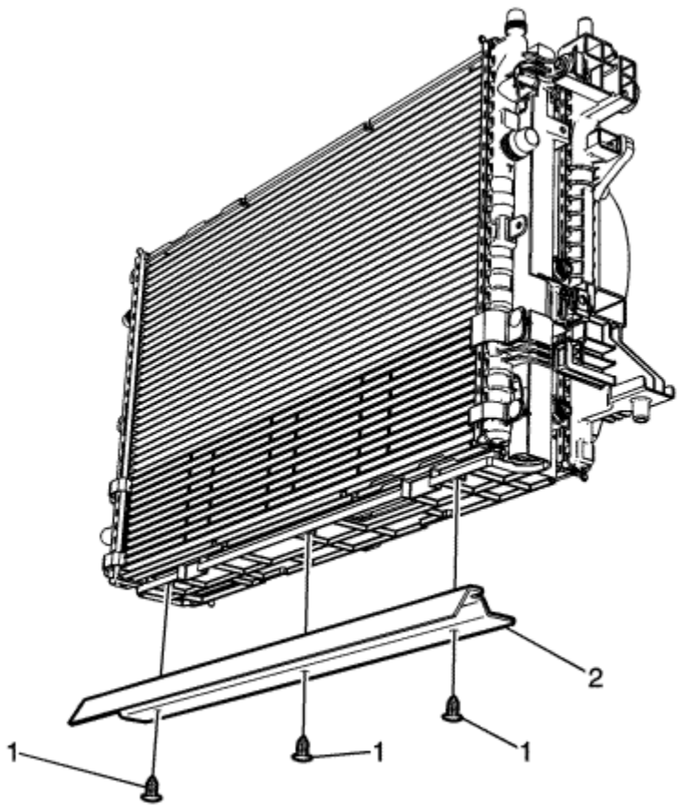

Callout	Component Name
Preliminary Procedure Remove the front bumper fascia. Refer to Front Bumper Fascia Removal and Installation : Volt → Ampera	
1	Radiator Air Lower Baffel and Deflector Retainers (Qty 3)
2	Radiator Air Lower Baffel and Deflector

© Copyright Chevrolet. All rights reserved

Radiator Air Side Baffle Replacement - Left Side

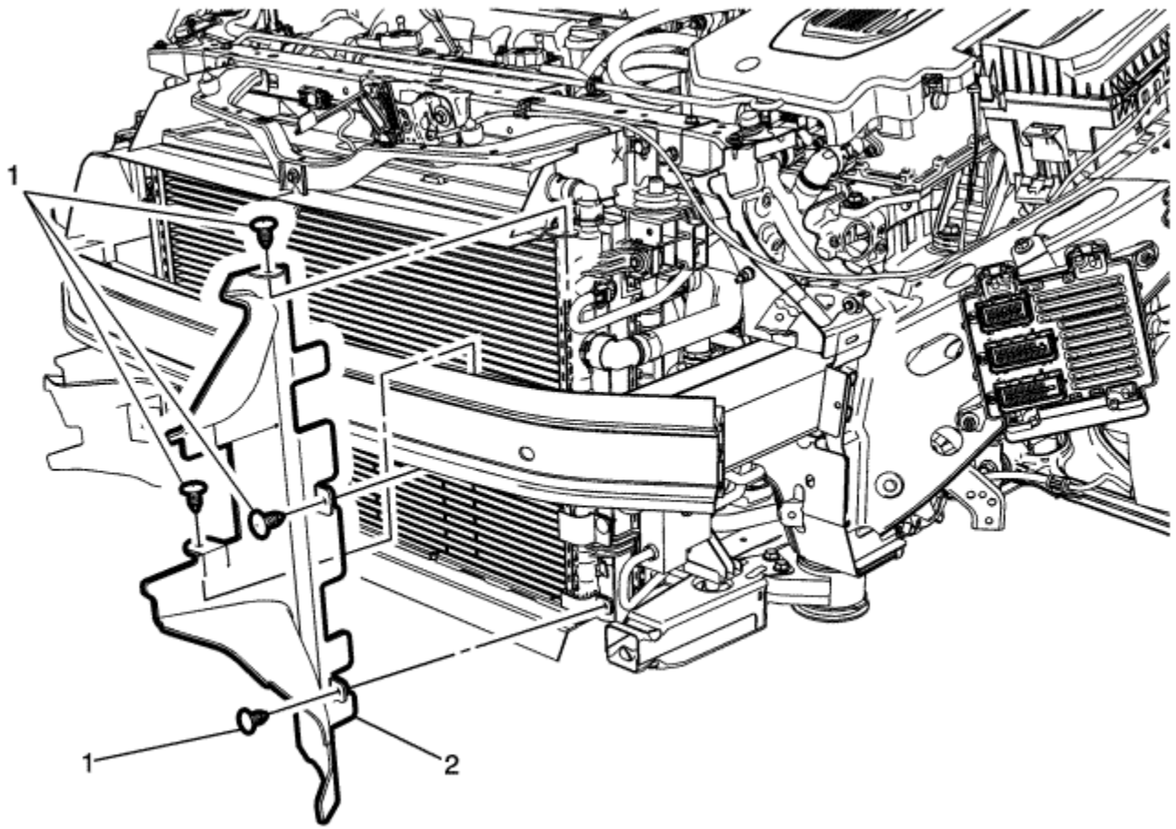

Callout	Component Name
Preliminary Procedure Remove front bumper fascia. Refer to Front Bumper Fascia Removal and Installation : Volt → Ampera	
1	Radiator Air Side Baffel Retainers (Qty 5)
2	Radiator Air Side Baffel

© Copyright Chevrolet. All rights reserved

Radiator Air Side Baffle Replacement - Right Side

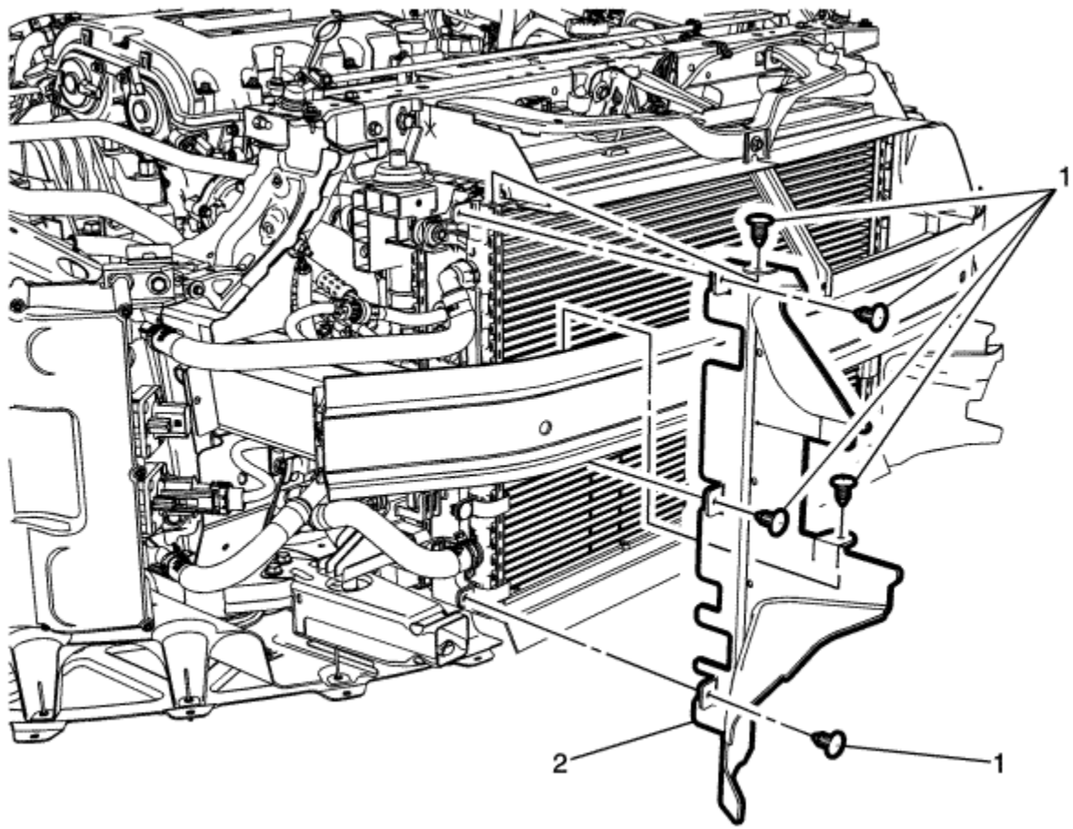

Callout	Component Name
Preliminary Procedure 1. Remove front bumper fascia. Refer to Front Bumper Fascia Removal and Installation : Volt → Ampera 2. Remove the ambient air temperature sensor. Refer to Ambient Air Temperature Sensor Replacement	

1	Radiator Air Side Baffel Retainers (Qty 6)
2	Radiator Air Side Baffel

© Copyright Chevrolet. All rights reserved

Radiator Air Seal Replacement

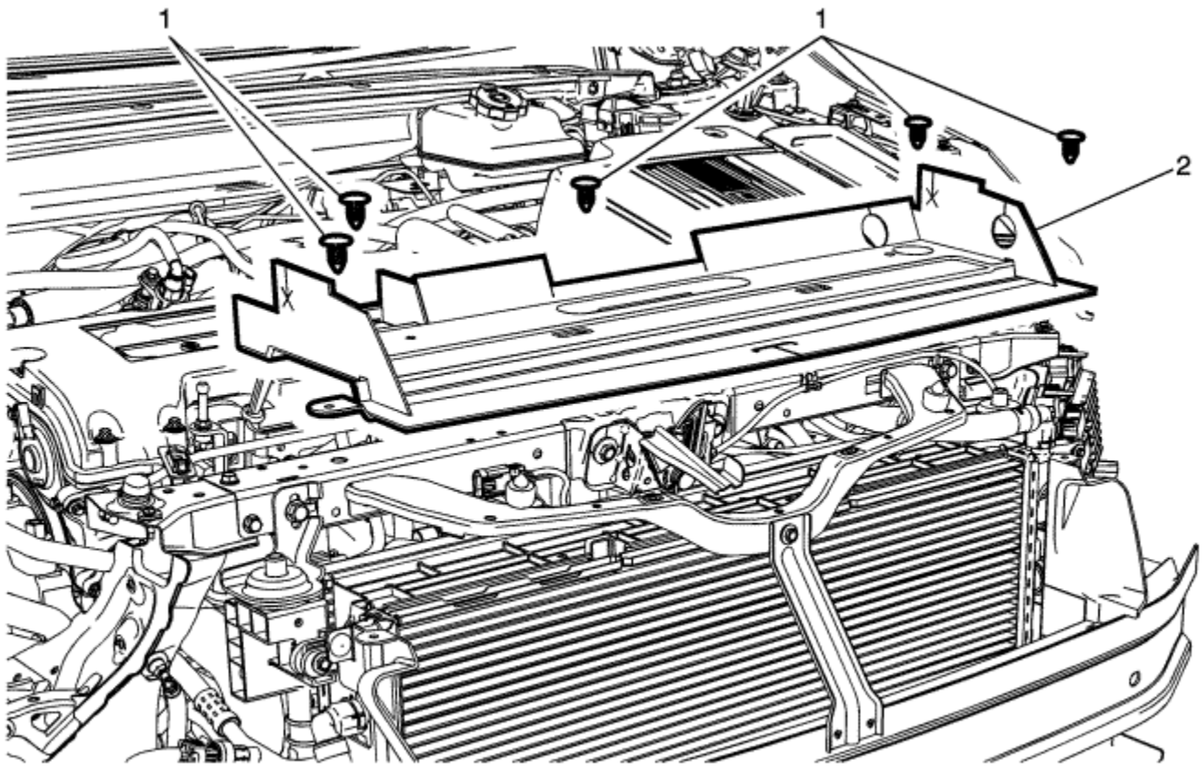

Callout	Component Name
Preliminary Procedure Remove front bumper fascia centre support bracket. Refer to Front Bumper Fascia Center Support Bracket Replacement	
1	Radiator Air Seal Retainers (Qty 5)
	Radiator Air Seal

2	**Tip** Unclip hose retainer from radiator air seal.

© Copyright Chevrolet. All rights reserved

Special Tools

Illustration	Tool Number/ Description
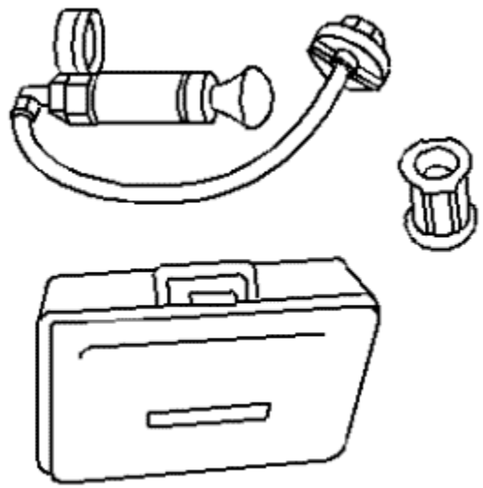	EN 24460-A J 24460-A Cooling System Pressure Tester
	GE 26568 J 26568 Coolant and Battery Tester

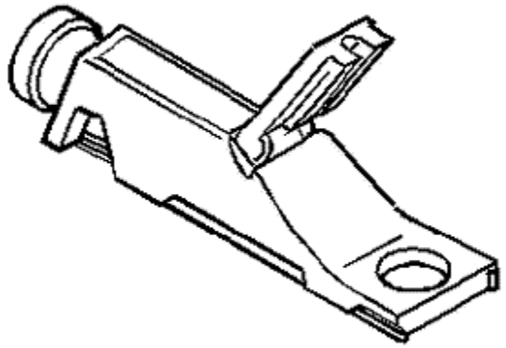	
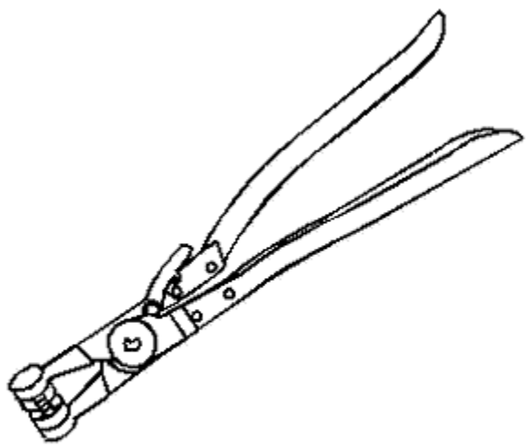	BO 38185 J 38185 Hose Clamp Pliers

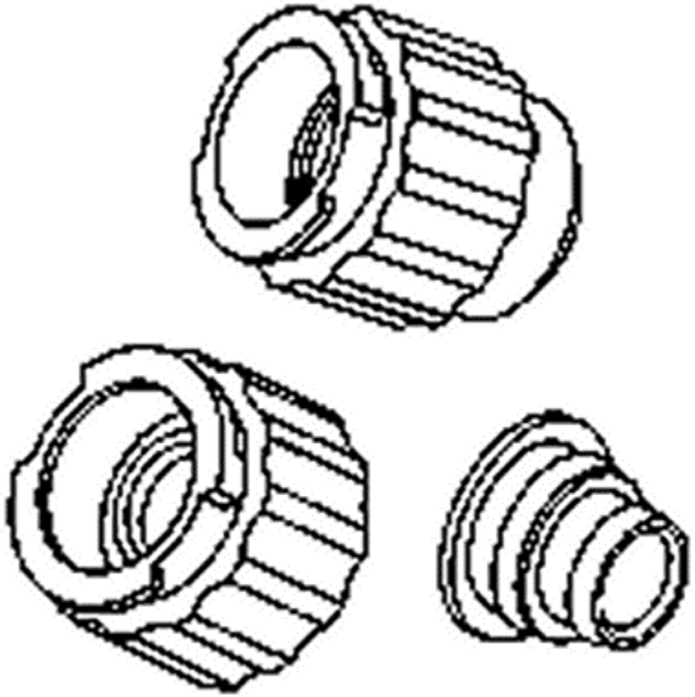

GE 42401-A

J 42401-A

Radiator Cap and Surge Tank Test Adapter

GE 47716

Vac-N-Fill Coolant Refill Tool

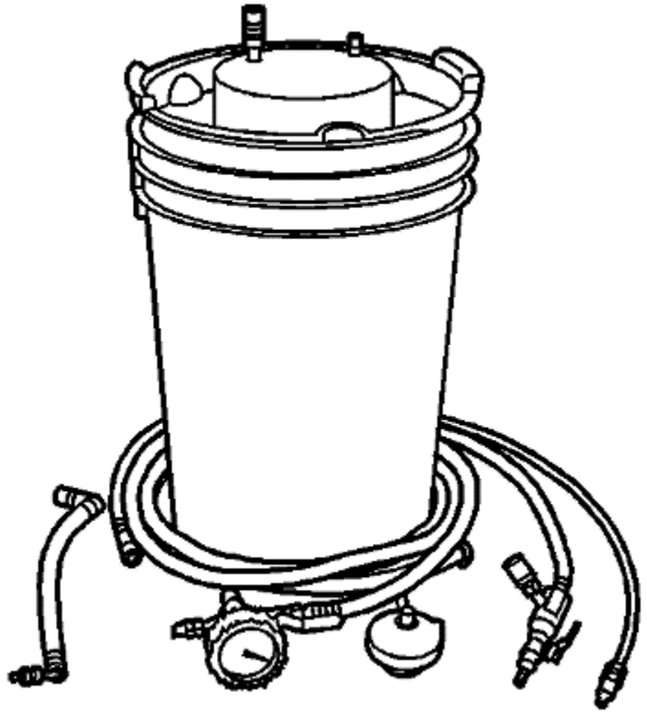

© Copyright Chevrolet. All rights reserved

Starting and Charging Schematics

12V Battery Management

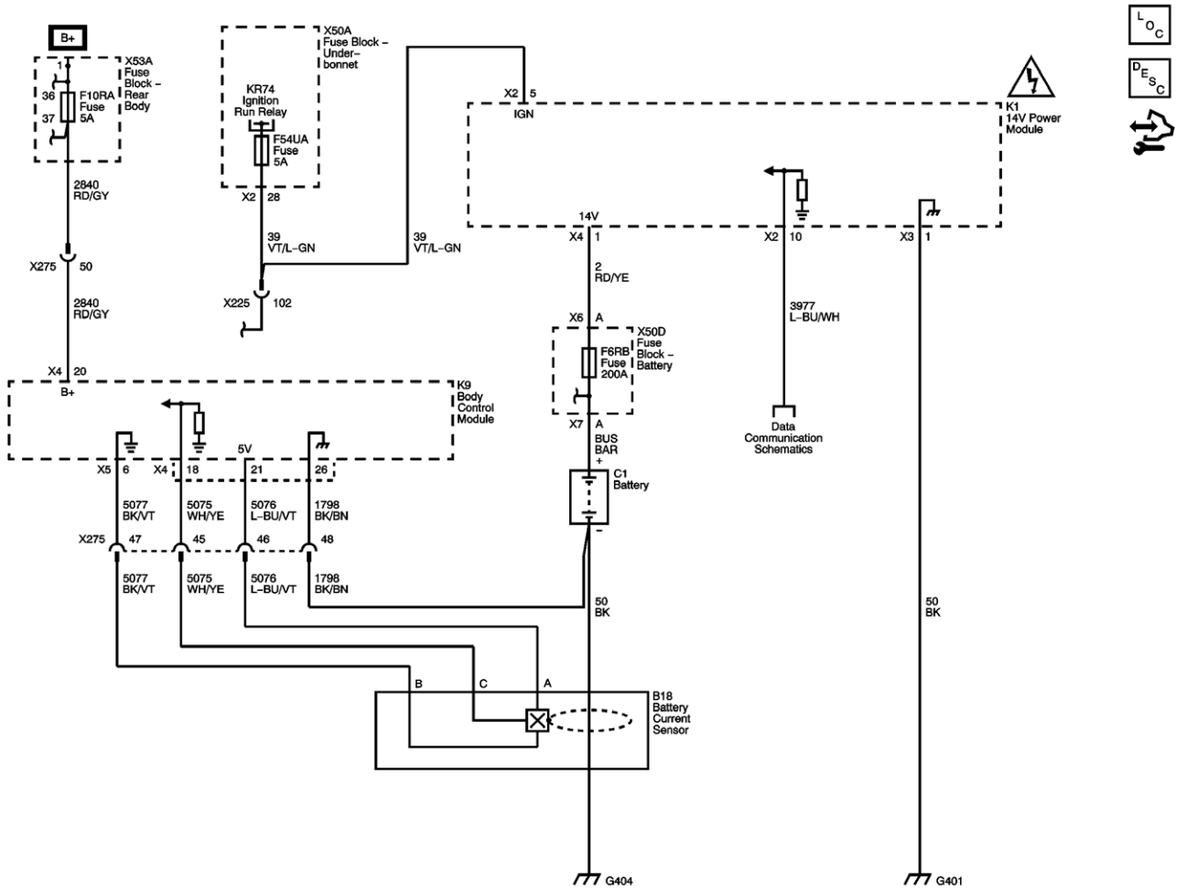

Master Electrical Component List

F2RA, F3RA, F4RA, F5RA, F7RA, F8RA, F10RA, F12RA and F13RA Fuses

F32UA, F33UA, F50UA, F51UA, F52UA, F53UA and F54UA Fuses

Master Electrical Schematic Icons

X50D Fuse Block - Battery and X50B Fuse Block - Under-bonnet Auxiliary Bussing

Data Communication Schematics

G201, G203, G205, G304, G401 and G404

© Copyright Chevrolet. All rights reserved

DTC B1325, B1330, B1517, C0800, C0899, C0900, C12E1, C12E2, P0562, P0563, P1A0C, P1A0D, or P1EFC

Diagnostic Instructions

- Perform the Diagnostic System Check - Vehicle prior to using this diagnostic procedure.
- Review Strategy Based Diagnosis for an overview of the diagnostic approach.
- Diagnostic Procedure Instructions provides an overview of each diagnostic category.

DTC Descriptors

DTC B1325 03: Control Module Power Circuit Low Voltage

DTC B1325 07: Control Module Power Circuit High Voltage

DTC B1330 03: Control Module Power 2 Circuit Low Voltage

DTC B1330 04: Control Module Power 2 Circuit Open

DTC B1517 03: Battery Voltage Low Voltage

DTC B1517 07: Battery Voltage High Voltage

DTC B1517 5A : Battery Voltage Not Plausible

DTC C0800 03: Control Module Power Circuit Low Voltage

DTC C0800 07: Control Module Power Circuit High Voltage

DTC C0800 0D: Control Module Power Circuit High Resistance

DTC C0800 11: Control Module Power Circuit High Input

DTC C0899 00: Control Module Power Circuit Malfunction

DTC C0899 03: Control Module Power Circuit Low Voltage

DTC C0900 00: Control Module Power Circuit Malfunction

DTC C0900 07: Control Module Power Circuit High Voltage

DTC C12E1: Electronic Brake Control Module Supply Circuit Low Voltage

DTC C12E2: Electronic Brake Control Module Supply Circuit High Voltage

DTC P0562: System Voltage Low Voltage

DTC P0563: System Voltage High Voltage

DTC P1A0C: Battery Energy Control Module System Voltage Low Voltage

DTC P1A0D: Battery Energy Control Module System Voltage High Voltage

DTC P1EFC: Battery Charger Control Module System Voltage Low Voltage

Circuit/System Description

The vehicle control modules or sensors monitor the system voltage to verify the system voltage is within the normal operating range.

Conditions for Running the DTC

The vehicle is ON.

Conditions for Setting the DTC

The control module or sensor detects a system voltage of less than approximately 9 V or greater than 18 V for approximately 5 seconds.

Action Taken When the DTC Sets

- A driver information centre message and/or warning indicator may be displayed.
- The control module may be temporarily disabled.

Conditions for Clearing the DTC

The system voltage returns to normal operating range.

Diagnostic Aids

- A high or low voltage DTC set or voltage value in multiple modules/sensors indicates a concern in the 12 V charging system.
- A possible cause of this DTC could be overcharging with a 12 V battery charger or jump starting.

Reference Information

Schematic Reference

Control Module References

Connector End View Reference

Component Connector End Views

Description and Operation

Charging System Description and Operation

Electrical Information Reference

- Circuit Testing
- Connector Repairs
- Testing for Intermittent Conditions and Poor Connections
- Wiring Repairs

DTC Type Reference

Powertrain Diagnostic Trouble Code (DTC) Type Definitions

Scan Tool Reference

Control Module References for scan tool information

Circuit/System Verification

1. Vehicle OFF, disconnect the T18 Battery Charger cord set. Measure and record the 12 V battery voltage at the battery terminals. The battery voltage should stabilise

between 12.4-12.8 V within a few minutes of turning the Vehicle OFF.
If not within the specified range, refer to Battery Inspection/Test .

2. Vehicle in Service Mode, accessories OFF, measure and record the 12 V battery voltage at the battery terminals. The voltage should be at least 1 V greater than the voltage measured in step 1 but less than 15 V.
If not within the specified range, refer to DC Power Conversion Test .
3. Observe the appropriate module scan tool B+ and ignition voltage parameters. The voltage readings should be within 1 V of the battery voltage.

Circuit/System Testing

Note: Use the schematic to identify the following:

- Control modules the vehicle is equipped with
- The control modules ground, B+, and Ignition circuit terminal IDs and connectors

1. Vehicle OFF, disconnect the harness connectors at the appropriate control module.

   Note: Some control module ground circuits may require up to 20 minutes to achieve a resistance reading of less than 10 Ω. In most cases the readings will drop below 20 Ω within 1 minute indicating the control modules are going to sleep.

2. Vehicle OFF, scan tool disconnected, open and close the driver door and wait 1 minute. Test for less than 10 Ω between each ground circuit terminal and ground.
If greater than the specified range, test the ground circuit for an open/high resistance.
3. If equipped, verify that a test lamp illuminates between each B+ circuit terminal and ground.
If the test lamp does not illuminate, test the B+ circuit for a short to ground or an open/high resistance.
4. If equipped, Vehicle in Service Mode, verify that a test lamp illuminates between each ignition circuit terminal and ground.
If the test lamp does not illuminate, test the ignition circuit for a short to ground or an open/high resistance.
5. If all circuits test normal, replace the control module.

Repair Instructions

Perform the Diagnostic Repair Verification after completing the diagnostic procedure.

Control Module References for control module replacement, programming and setup

&#169© Copyright Chevrolet. All rights reserved

DTC B1516

Diagnostic Instructions

- Perform the Diagnostic System Check - Vehicle prior to using this diagnostic procedure.
- Review Strategy Based Diagnosis for an overview of the diagnostic approach.
- Diagnostic Procedure Instructions provides an overview of each diagnostic category.

DTC Descriptors

DTC B1516 08: Battery Current Sensor Performance - Signal Invalid

DTC B1516 66: Battery Current Sensor Incorrect Mounting

Diagnostic Fault Information

Circuit	Short to Ground	Open/High Resistance	Short to Voltage	Signal Performance
5V Reference	B1516 08	B1516 08	-	-
Signal	B1516 08	B1516 08	B1516 08	B1516 08, B1516 66
Low Reference	-	B1516 08	-	-

Circuit/System Description

The battery current sensor is a 3 wire hall effect current sensor. The body control module (BCM) supplies 5 V and ground to the battery current sensor. The battery current sensor measures the amount of current flowing to or from the battery, and supplies a pulse width modulation (PWM) signal to the BCM.

Conditions for Running the DTC

B1516 08

The BCM is awake.

B1516 66

- The BCM is awake.
- The engine is OFF.

Conditions for Setting the DTC

B1516 08

The battery current signal is less than 4% or greater than 96% duty cycle for 2 min.

B1516 66

The battery current polarity is positive for 2 min.

Action Taken When the DTC Sets

The regulated voltage control is disabled.

Conditions for Clearing the DTC

The DTC passes when the battery current returns to the normal range for 15 s.

Diagnostic Aids

DTC B1516 08 could be set by overcharging with a battery charger or jump starting.

Reference Information

Schematic Reference

Starting and Charging Schematics

Connector End View Reference

Component Connector End Views

Description and Operation

Charging System Description and Operation

Electrical Information Reference

- Circuit Testing
- Connector Repairs
- Testing for Intermittent Conditions and Poor Connections
- Wiring Repairs

Scan Tool Reference

Control Module References for scan tool information

Circuit/System Testing

B1516 08

1. Vehicle OFF, disconnect the harness connector at the B18 Battery Current Sensor.
2. Vehicle OFF and scan tool disconnected, open and close the driver door, and wait 1 minute. Test for less than 30 Ω between the low reference circuit terminal B and ground.
   If greater than specified range, test the low reference circuit for an open/high resistance. If the circuit tests normal, replace the K9 Body Control Module.
3. Vehicle in Service Mode, test for 4.8-5.2 V between the 5 V reference circuit terminal A and ground.
   If less than the specified range , test the 5 V reference circuit for a short to ground or an open/high resistance. If the circuit tests normal, replace the K9 Body Control Module.
   If greater than the specified range, test the 5 V reference circuit for a short to voltage. If the circuit tests normal, replace the K9 Body Control Module.
4. Vehicle in Service Mode, test for 4.8-5.2 V between the signal circuit terminal C and ground.
   If less than the specified range, test the signal circuit for a short to ground or an open/high resistance. If the circuit tests normal, replace the K9 Body Control Module.
   If greater than the specified range, test the signal circuit for a short to voltage. If the circuit tests normal, replace the K9 Body Control Module.
5. If all circuits test normal, test or replace the B18 Battery Current Sensor.

B1516 66

1. Verify that the B18 Battery Current Sensor is installed securely around the negative battery cable, with the tape tab pointing away from the negative terminal on the C1 Battery.
   If the B18 Battery Current Sensor is not installed correctly, remove and reinstall the sensor properly.
2. Replace the B18 Battery Current Sensor.

Repair Instructions

Perform the Diagnostic Repair Verification after completing the diagnostic procedure.

Control Module References for BCM replacement, programming and setup

&#169© Copyright Chevrolet. All rights reserved

DTC B151A

Diagnostic Instructions

- Perform the Diagnostic System Check - Vehicle prior to using this diagnostic procedure.
- Review Strategy Based Diagnosis for an overview of the diagnostic approach.
- Diagnostic Procedure Instructions provides an overview of each diagnostic category.

DTC Descriptor

DTC B151A 58: Battery Capacity Performance

Circuit/System Description

The body control module (BCM) monitors the battery voltage level during an engine crank event to detect a low battery voltage condition.

Conditions for Running the DTC

The vehicle is ON

Conditions for Setting the DTC

A minimum crank battery voltage is less than the minimum crank battery voltage threshold for 16 consecutive crank events.

Action Taken When the DTC Sets

A driver information centre message is displayed.

Conditions for Clearing the DTC

The DTC will clear if the minimum crank voltage is greater than the minimum crank voltage threshold during a crank event.

Reference Information

Schematic Reference

Starting and Charging Schematics

Connector End View Reference

Component Connector End Views

Description and Operation

Charging System Description and Operation

Electrical Information Reference

- Circuit Testing
- Connector Repairs
- Testing for Intermittent Conditions and Poor Connections
- Wiring Repairs

Scan Tool Reference

Control Module References for scan tool information

Circuit/System Verification

Before replacing the C1 Battery perform the Battery Inspection/Test .

&#169© Copyright Chevrolet. All rights reserved

DTC B1527

Diagnostic Instructions

- Perform the Diagnostic System Check - Vehicle prior to using this diagnostic procedure.
- Review Strategy Based Diagnosis for an overview of the diagnostic approach.
- Diagnostic Procedure Instructions provides an overview of each diagnostic category.

DTC Descriptor

DTC B1527: Parasitic Load

Circuit/System Description

The body control module (BCM) monitors the state of charge of the electrical system. If the BCM senses that the state of charge at Vehicle in Service Mode is 30% lower than what it was when the engine was running.

Conditions for Running the DTC

The ignition must be in Accessory or Run mode for this code to set.

Conditions for Setting the DTC

The state of charge at Vehicle in Service Mode is 30% lower than when the engine was running and battery drain is more than 2 A.

Action Taken When the DTC Sets

There is no battery indicator illuminated or driver information centre message displayed.

Conditions for Clearing the DTC

- The DTC will clear if the fault does not return after 50 consecutive ignition cycles.

- The DTC will clear when run state of charge is greater than or equal to 80%.

Reference Information

Schematic Reference

Starting and Charging Schematics

Connector End View Reference

Component Connector End Views

Description and Operation

Charging System Description and Operation

Electrical Information Reference

- Circuit Testing
- Connector Repairs
- Testing for Intermittent Conditions and Poor Connections
- Wiring Repairs

Scan Tool Reference

Control Module References for scan tool information

Circuit/System Verification

Refer to Battery Electrical Drain/Parasitic Load Test .

&#169© Copyright Chevrolet. All rights reserved

Symptoms - Engine Electrical

The following steps must be completed before using the symptom tables.

- Perform Diagnostic System Check - Vehicle before using the Symptom Tables in order to verify that all of the following are true:
  - The power modes are correct.
  - The control modules can communicate via the serial data link.
  - There are no DTCs set.
- Review the system descriptions and operations in order to familiarise yourself with the system functions. Refer to one of the following system operations:
  - Battery Description and Operation
  - Charging System Description and Operation
  - Starting System Description and Operation

Visual/Physical Inspection

- Inspect for aftermarket devices which could affect the operation of the 12 V charging system. Refer to Checking Aftermarket Accessories .
- Inspect the easily accessible or visible system components for obvious damage or conditions which could cause the symptom.

Intermittent

Faulty electrical connections or wiring may be the cause of intermittent conditions. Refer to Testing for Intermittent Conditions and Poor Connections .

Symptom List

Refer to a symptom diagnostic procedure from the following list in order to diagnose the symptom:

- Battery Inspection/Test
- Battery Charging
- Battery Electrical Drain/Parasitic Load Test
- Charging System Test

&#169© Copyright Chevrolet. All rights reserved

Battery Inspection/Test

Diagnostic Instructions

- Perform the Diagnostic System Check - Vehicle prior to using this diagnostic procedure.
- Review Strategy Based Diagnosis for an overview of the diagnostic approach.
- Diagnostic Procedure Instructions provides an overview of each diagnostic category.

Diagnostic Aids

Warning: Refer to Battery Disconnect Warning in the Preface section.

Note:
- The battery test using the EL 50313 Battery Tester requires correct connections to the battery terminals. A failure to obtain the correct connections during the test may result in a failed test on a good battery.
- Use the Out of Vehicle test for each battery when testing a vehicle with dual batteries.

Follow these instructions in order to avoid an incorrect diagnosis because of connections:

- If testing the vehicle with the battery cables still connected, wiggle the *EL 50313* battery tester clips on the terminal. This may cut through any coating or through any oxidation that may be present on the terminal.
- If correct connections to the battery terminals in the vehicle are in doubt, perform the following steps:
  1. Disconnect the negative battery cable.
  2. Disconnect the positive battery cable.
  3. Follow the instructions for testing a removed battery.
- If the tester displays a REPLACE BATTERY or BAD CELL REPLACE result for a battery tested in the vehicle with the battery cables connected, perform the following steps:
  1. Disconnect the negative battery cable.
  2. Disconnect the positive battery cable.

  Note: Always write the test code displayed by the tester on the repair order for any warranty purposes. The number is a unique code that describes the test data for a particular battery at a particular time. The test code may occasionally repeat when you retest the same battery. More often, each test will result in a different code. Use the test code from the second, or Out of Vehicle test.

3. Follow the instructions for testing a removed battery.
4. Replace the battery only if the second test shows a REPLACE BATTERY or BAD CELL REPLACE result.

Use the test code from the second test for any warranty purposes.

Reference Information

Schematic Reference

Starting and Charging Schematics

Connector End View Reference

Component Connector End Views

Description and Operation

Starting System Description and Operation

Electrical Information Reference

- Circuit Testing
- Connector Repairs
- Testing for Intermittent Conditions and Poor Connections
- Wiring Repairs

Scan Tool Reference

Control Module References for scan tool information

Special Tools

EL 50313 Battery Tester

For equivalent regional tools, refer to Special Tools .

Circuit/System Testing

Warning: Unless directed otherwise, the ignition and start switch must be in the OFF or LOCK position, and all electrical loads must be OFF before servicing any electrical

component. Disconnect the negative battery cable to prevent an electrical spark should a tool or equipment come in contact with an exposed electrical terminal. Failure to follow these precautions may result in personal injury and/or damage to the vehicle or its components.

For Vehicles equipped with OnStar® (UE1) with Back Up Battery:

The Back Up Battery is a redundant power supply to allow limited OnStar® functionality in the event of a main vehicle battery power disruption to the VCIM (OnStar®module). Do not disconnect the main vehicle battery or remove the OnStar® fuse with the ignition key in any position other than OFF. Retained accessory power (RAP) should be allowed to time out or be disabled (simply opening the driver door should disable RAP) before disconnecting power. Disconnecting power to the OnStar® module in any way while the ignition is On or with RAP activated may cause activation of the OnStar® Back-Up Battery (BUB) system and will discharge and permanently damage the back-up battery. Once the Back-Up Battery is activated it will stay on until it has completely discharged. The BUB is not rechargeable and once activated the BUB must be replaced.

1. Inspect the C1 Battery for a cracked, broken or damaged case, which may be indicated by battery acid leakage.
   If there is any apparent damage, replace the C1 Battery.
2. Verify the cold cranking amperage and amperage hour rating of the battery to the original battery.
   If the C1 Battery does not meet or exceed specifications, replace the C1 Battery.
3. Verify that the battery cables are clean and tight.
   If the battery cables need to be cleaned, clean as required and tighten as specified.
   If the battery cables are damaged, replace then tighten as specified.
4. Install the *EL 50313* battery tester and follow directions supplied by the tester.
   If the tester calls for charging the battery, refer to Battery Charging .
5. The battery should not have a history of being discharged or having low voltage.
   If the battery has frequently been discharged or had low voltage while the engine is running, refer to Charging System Test .
   If the battery has frequently been discharged or had low voltage while the ignition is OFF, refer to Battery Electrical Drain/Parasitic Load Test .

Repair Instructions

Perform the Diagnostic Repair Verification after completing the diagnostic procedure.

- Battery Positive and Negative Cable Replacement
- Battery Replacement

&#169© Copyright Chevrolet. All rights reserved

Battery Charging

12 V Battery

The following procedure is for the 12 V battery only.

Special Tools

EL 42000 Battery Tester

For equivalent regional tools, refer to Special Tools .

Diagnostic Aids

- For best results, use an automatic taper rate battery charger with a voltage capability of 16 V.
- The charging area should be well ventilated.
- Do not charge a battery that appears to be frozen. Allow the battery to warm to room temperature and test it using the *EL 42000* battery tester before charging.
- The maximum permissible voltage is 14.8 V (at room temperature) for the absorbent glass mat battery equipped on this vehicle.

Battery State of Charge

Note: Using voltage to determine the batteries state of charge is only accurate after the battery has been at rest for 24 h. This is enough time for the acid in each cell to equalise. If the battery has been charged or discharged in the past 24 h, the battery state of charge will only be an estimate.

The maintenance free batteries state of charge is estimated by reading the voltage of the battery across the battery terminals. Because the voltage is affected by current flow into or out of the battery, the engine must be stopped and all electrical loads turned OFF, including parasitic loads, when checking the voltage. The voltage can also be affected if the battery has just been charged or discharged, so it is important to consider what has happened to the battery in the time just before testing. Use the following procedure to determine the batteries state of charge:

1. Be sure all electrical loads are turned OFF.
2. Determine whether the battery has been used in a vehicle or charged within the past 12 h.
   - If the answer is no, the terminal voltage will be stabilised and no action is necessary before reading the voltage. Skip to step 3.
   - If the answer is yes, terminal voltage will not be stabilised and you should wait 12 h since the last time the battery was used.
3. Estimate the battery temperature by determining the average temperature to which the battery has been exposed for the past 12 h.

Note: The table is accurate to 10% only after the battery has been at rest for 12 h.

4. Measure the battery voltage at the battery terminals. Refer to the following table to determine the state of charge according to the estimated battery temperature:

Battery Voltage	% Charge at 0°C (32°F)	% Charge at 25°C (75°F)
12.75 V	100%	100%
12.7 V	100%	90%
12.6 V	90%	75%
12.45 V	75%	65%
12.2 V	65%	45%
12.0 V	40%	20%

Use the state of charge information as follows:

- A battery with a state of charge that is below 65% must always be recharged before returning it to service or continuing storage.
- A battery with a state of charge that is 65% or greater is generally considered to be charged enough in order to be returned to normal service or in order to continue storage. However, if the battery is being used in slow traffic or with short drive times, or if the temperature is very hot or very cold, the battery should be fully charged, to at least 90%, before returning it to service or continuing storage.

Charging Time Required

The time required to charge a battery will vary depending upon the following factors:

- The battery charger capacity--The higher the charger amperage, the less time it will take to charge the battery.
- The state of charge of the battery--A completely discharged battery requires more than twice as much charging time as a half charged battery. In a discharged battery with a voltage below 11 V, the battery has a very high internal resistance and may only accept a very low current at first. Later, as the charging current causes the acid content to increase in the electrolyte, the charging current will increase. Extremely discharged batteries may not activate the reversed voltage protection in some chargers. Refer to the manufacturers instructions for operating this circuitry.
- The temperature of the battery--The colder the battery is, the more time it takes to recharge the battery. The charging current accepted by a cold battery is very low at first. As the battery warms, the charging current will increase.

Charging Procedure

Caution: Turn OFF the ignition when connecting or disconnecting the battery cables, the battery charger or the jump leads. Failure to do so may damage the ECM/PCM or other electronic components.

Caution: Refer to Fastener Caution in the Preface section.

When charging side terminal batteries with the battery cables connected, connect the charger to the positive cable bolt and to a ground located away from the battery. When

charging side terminal batteries with the battery cables disconnected, install the battery side terminal adaptors and connect the charger to the adaptors.

Tighten
Tighten the battery side terminal adapters to 15 N·m (11 lb ft).

Use the following procedure to charge the battery:

1. Turn OFF the charger.
2. Ensure that all of the battery terminal connections are clean and tight.
3. Connect the charger positive lead to the battery positive terminal on the battery or the remote jumper stud under-bonnet.

   Caution: Do not connect the negative charger lead to the housings of other vehicle electrical accessories or equipment. The action of the battery charger may damage such equipment.

4. Connect the negative charger lead to a solid engine ground or to a ground stud in the engine compartment that is connected directly to the battery negative terminal, but away from the battery. If the negative battery cable is disconnected and a terminal adapter is being used, connect directly to the adapter.
5. Turn ON the charger and set to the highest setting for normal charging.
6. Inspect the battery every half hour after starting the battery charger.
   - Charge the battery until the taper rate charger indicates that the battery is fully charged.
   - Estimate the battery temperature by feeling the side of the battery. If it feels hot to the touch or its temperature is over 45°C (125°F), discontinue charging and allow the battery to cool before resuming charging.
7. After charging, test the battery. Refer to Battery Inspection/Test .

&#169© Copyright Chevrolet. All rights reserved

Battery Electrical Drain/Parasitic Load Test

12 V Battery

The following procedure is for the 12 V battery only.

Diagnostic Instructions

- Perform the Diagnostic System Check - Vehicle prior to using this diagnostic procedure.
- Review Strategy Based Diagnosis for an overview of the diagnostic approach.
- Diagnostic Procedure Instructions provides an overview of each diagnostic category.

Circuit/System Description

Components most likely to cause a parasitic draw on the vehicles battery are switches, relays, and control modules. After the vehicle is turned OFF the control modules will begin to go to sleep (shut OFF). All control modules do not go to sleep at the same time, some may take up to 30 min or longer after turning the Vehicle OFF before going to sleep, like the HVAC and body control modules. Others such as the telematics communication interface control module and remote control door lock receiver may periodically wake up then go back to sleep. These are all normal conditions.

Diagnostic Aids

- Rule out any possible aftermarket equipment causing an unacceptable parasitic current drain. Aftermarket accessories installed into the courtesy lamp circuit can cause the inadvertent power timer in the body control module (BCM) to keep resetting. This may cause the BCM to remain awake and cause a current drain on the battery.
- Rule out customer driving habits such as regular short trips that do not allow enough time to properly charge the battery. Refer to Battery Description and Operation .
- Verify that the battery and charging system are in proper working order. Refer to Battery Charging and Charging System Test .
- A battery discharging for no apparent reason while the vehicle is parked can be caused by an intermittent draw, such as a module waking up, or a continuous draw, such as a interior light or stuck relay.
- Some systems and modules such as OnStar®, and regulated voltage control, if equipped, are designed to wake up, perform a task, and go back asleep at regular intervals. Refer to Body Control System Description and Operation for the system or modules description and operation.
- An engine off natural vacuum evaporative test can occur if the engine control module (ECM) determines the drive cycle has met the appropriate criteria immediately after key off. The ECM will stay awake and the vent solenoid will stay energised for as long as 45 min. The typical current draw for this is about 1 A.
- The telematics communication interface control module current draw is very low, less than 40 mA, so the OnStar system is left in that "awake" state for up to the first 48 h. Parasitic draw of up to 40 mA with an occasional spike as high as 80 mA through the telematics communication interface control module for the first 48 h is normal.

- Some automatic climate control systems can remain in a semi awake state for up to 3 h, actual draw amounts vary by vehicle platform but are typically not greater than 50 mA.
- An extremely low mA current level is consumed by the remote keyless entry receiver for monitoring purposes, actual system wake up only occurs when the fobs for the vehicle are used. When other devices on the same remote keyless entry operating frequency are activated, such as the 4 tire pressure monitoring sensors and other vehicle transmitters in the vicinity, the remote keyless entry receiver will have a 100 mA spike. These spikes are normal and occur too briefly to have a significant effect on battery drain. Competing signals may cause remote keyless entry performance issues such as jamming but should not cause excessive battery draw.
- If an excessive current draw is not present during initial testing, continue periodic testing over a 2 h period to see if the current draw increases and stays above an unacceptable level.

Note: The battery specification listed below is a generic specification, use manufacturer specifications when testing the battery.

- The battery run down time will vary depending on the batteries reserve capacity. If the reserve capacity is higher, then the battery run down time may be longer. If the reserve capacity is lower, then the battery run down time may be shorter. The graph below indicates roughly how many days a 690 cold cranking amperage battery with a 110 min reserve capacity starting at 80 percent state of charge will last with a constant current draw until it reaches 50 percent state of charge. Differences in battery reserve capacity and temperature will affect the results.

Current Drain	Days
25 mA	33
50 mA	16.5
75 mA	11
100 mA	8.25
250 mA	3.3
500 mA	1.65
750 mA	1
1 A	0.8
2 A	0.4

Reference Information

Schematic Reference

Control Module References

Connector End View Reference

Component Connector End Views

Electrical Information Reference

- Circuit Testing
- Testing for Intermittent Conditions and Poor Connections
- Connector Repairs
- Wiring Repairs

Scan Tool Reference

Control Module References for scan tool information

Special Tools

EL 38758 Parasitic Draw Test Switch

For equivalent regional tools, refer to Special Tools .

Circuit/System Verification

Note:

- Most vehicle systems will go to sleep within 30 min but it can take up to 2 h before all systems power down allowing the parasitic draw test to pass. An occasional increase in the parasitic draw is normal as long as it returns within 1 s.
- Closing the door latches/ajar switch while leaving the doors open is recommended, this allows the vehicle systems to perform in a "doors closed" mode while allowing vehicle interior access that may be needed to complete the diagnostic steps.
- Locking doors will arm the vehicle content theft deterrent system if equipped. Failure to arm the system may cause a theft system fault to not be present during testing.
- There are many things that can prevent the vehicle from completely going to sleep and passing the parasitic draw test. Make sure all the conditions listed below are met before performing the parasitic current draw test.
  - Vehicle OFF
  - Retained Accessory Power OFF - open and close the driver door after Vehicle OFF
  - Scan tool not communicating with a vehicle control module - in some cases it may need to be disconnected from the data link connector.
  - All access doors closed
  - Headlamps OFF - auto headlamps disabled
  - Any delay lighting OFF
  - If equipped with an under bonnet lamp disable it
  - HVAC after blow OFF
  - Any accessory that can work with Vehicle OFF inactive or OFF
  - Wait up to 2 min or longer, after all other listed conditions are met

Using an Inductive Pickup Probe

1. Connect an inductive pickup probe to the negative battery cable that can read down to 1 mA.
2. Vehicle OFF, as the vehicle systems shut down test for less than 30 mA of parasitic current drain.
   If greater than the specified range, refer to Circuit/System Testing.

Using the EL 38758 Parasitic Draw Test Switch

Warning: Refer to Battery Disconnect Warning in the Preface section.

Caution: When a fused jumper wire or digital multimeter is connected to the test switch terminals, always turn the test switch ON before opening any access door, turning the ignition on, or turning any accessory on. This is to prevent damaging the jumper wire or digital multimeter fuse.

Note: The switch knob on the *EL 38758* switch is marked ON and OFF. When the switch knob is in the ON position, the circuit is closed and electrical current will pass through the switch. When the switch knob is in the OFF position, the circuit is open and electrical current will not pass through the switch.

1. Vehicle OFF, disconnect the battery negative cable from the battery. Refer to Battery Negative Cable Disconnection and Connection .
2. Turn the *EL 38758* switch knob to the OFF position.
3. Install the male end of the *EL 38758* switch to the battery ground terminal.
4. Install the battery negative cable to the female end of the *EL 38758* switch.
5. Turn the *EL 38758* switch knob to the ON position.
6. Road test the vehicle and activate all of the accessories such as the radio and air conditioning.
7. Vehicle OFF, connect a 10 A fused jumper wire to the test switch tool terminals.
8. Turn the *EL 38758* switch knob to the OFF position. The current now flows through the jumper wire.
9. Check the fuse in the jumper wire. The fuse should be OK.
   Failed: If the jumper wire fuse is blown, refer to Circuit/System Testing.
   Passed
10. Turn the *EL 38758* switch knob to the ON position. Remove the fused jumper wire.
11. Connect a digital multimeter set to the 10 A DC scale between the test switch tool terminals.
12. Turn the *EL 38758* switch knob to the OFF position. The current now flows through the DMM.
13. As the vehicle systems shut down test for less than 30 mA of parasitic current drain.
    If greater than the specified range, refer to Circuit/System Testing.

Circuit/System Testing

Note:

- Removing or installing a fuse, relay, or connector, to determine the area causing high parasitic draw may wake up control modules. You must wait for the control modules to go back to sleep before retesting. It is best to install any removed or disconnected components after the diagnosis is completed.
- Fuses for power mode master components such as the BCM should be removed last to avoid misdiagnosis.
- If a scan tool is connected to the DLC, either disconnect it or subtract the scan tool current draw from the DMM reading to get the actual vehicle parasitic current draw.

If the vehicle has an unacceptable amount of parasitic current draw, remove each fuse one at a time until the current draw falls to an acceptable level. A drop of more than 10-20 mA, when disabling a single system or circuit, is an indication of an overly high current draw that could be causing the battery drain. Refer to Power Distribution Schematics to diagnose exactly which circuit of the suspect system is causing the high parasitic drain. The follow is a list of common components that could cause a high current draw:

- Stuck switch
- Stuck relay
- Control module

Repair Instructions

Perform the Diagnostic Repair Verification after completing the diagnostic procedure.

Control Module References for control module replacement, programming and setup

&#169© Copyright Chevrolet. All rights reserved

Charging System Test

The accessory power module supplies the energy that flows between the high voltage (300 V) direct current (DC) and low voltage (14 V) DC to charge the 12 V battery and power accessories. To test the charging system, refer to DC Power Conversion Test .

© Copyright Chevrolet. All rights reserved

Battery Positive and Negative Cable Replacement

Removal Procedure

Danger: Always perform the High Voltage Disabling procedure prior to servicing any High Voltage component or connection. Personal Protection Equipment (PPE) and proper procedures must be followed.

The High Voltage Disabling procedure will perform the following tasks:

- Identify how to disable high voltage.
- Identify how to test for the presence of high voltage.
- Identify condition under which high voltage is always present and personal protection equipment (PPE) and proper procedures must be followed.

Failure to follow the procedures exactly as written may result in serious injury or death.

1. Disable the high voltage. Refer to High Voltage Disabling .
2. Remove the rear compartment floor stowage trim compartment. Refer to Rear Compartment Floor Stowage Trim Compartment Replacement .
3. Disconnect the battery negative cable. Refer to Battery Negative Cable Disconnection and Connection .

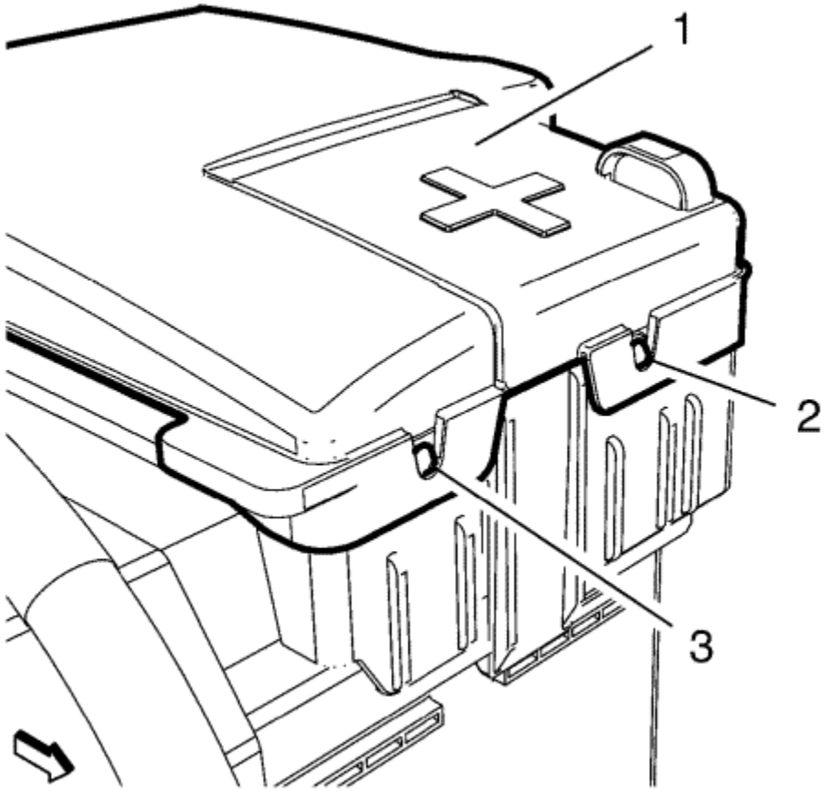

4. Unlock the retaining tab (2) on the battery fuse box cover.
5. Open the battery fuse box flap (1).

   Note: Note: Pull the battery fuse box housing. DO NOT pull the flap.

6. Unlock the retaining tab (3) and open the battery fuse box cover.

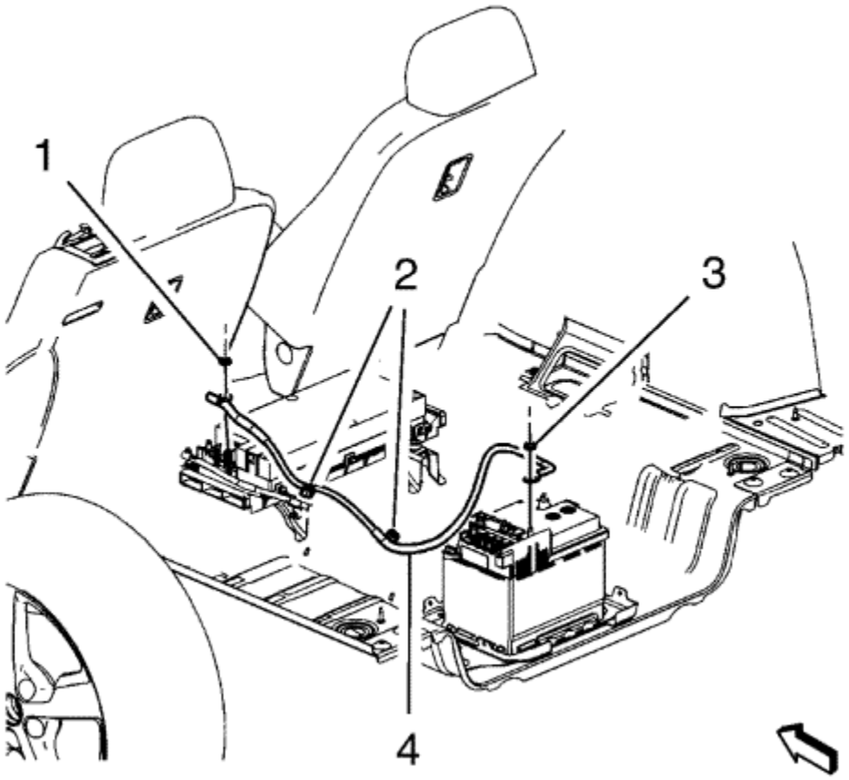

7. Remove the accessory DC power control module nut (1).
8. Remove the 2 battery cable retainers (2).
9. Remove the battery positive and negative cable nut (3).
10. Remove the battery positive and negative cable (4).

Installation Procedure

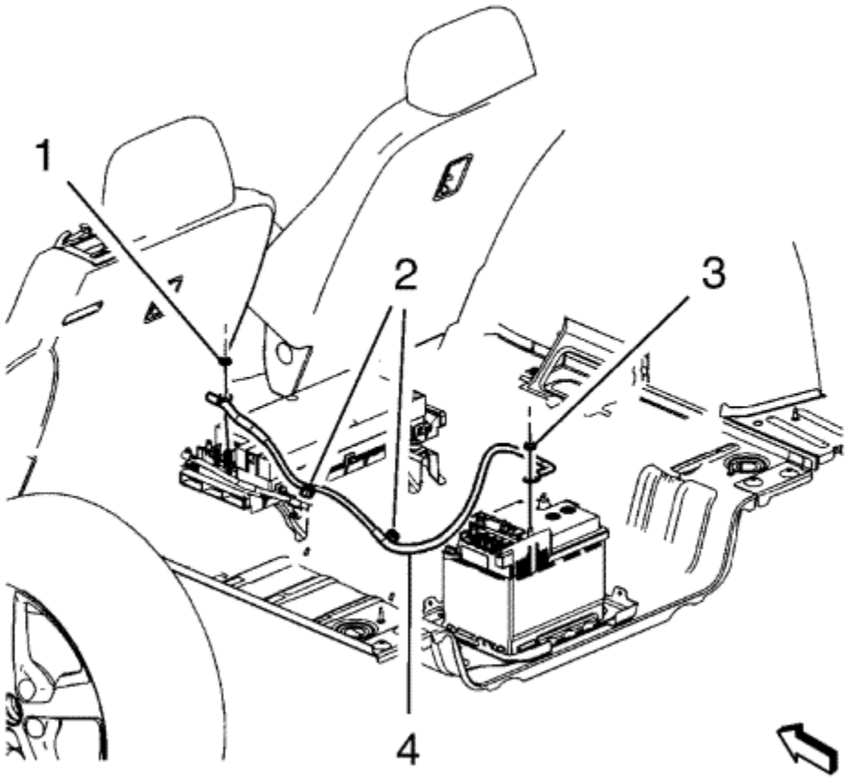

1. Install the battery positive and negative cable (4).

   Caution: Refer to Fastener Caution in the Preface section.

2. Install the battery positive and negative cable nut (3) and tighten to **12 N·m (106 lb in)**.
3. Install the 2 battery cable retainers (2).
4. Install the accessory DC power control module nut (1) and tighten to **22 N·m (16 lb ft)**.

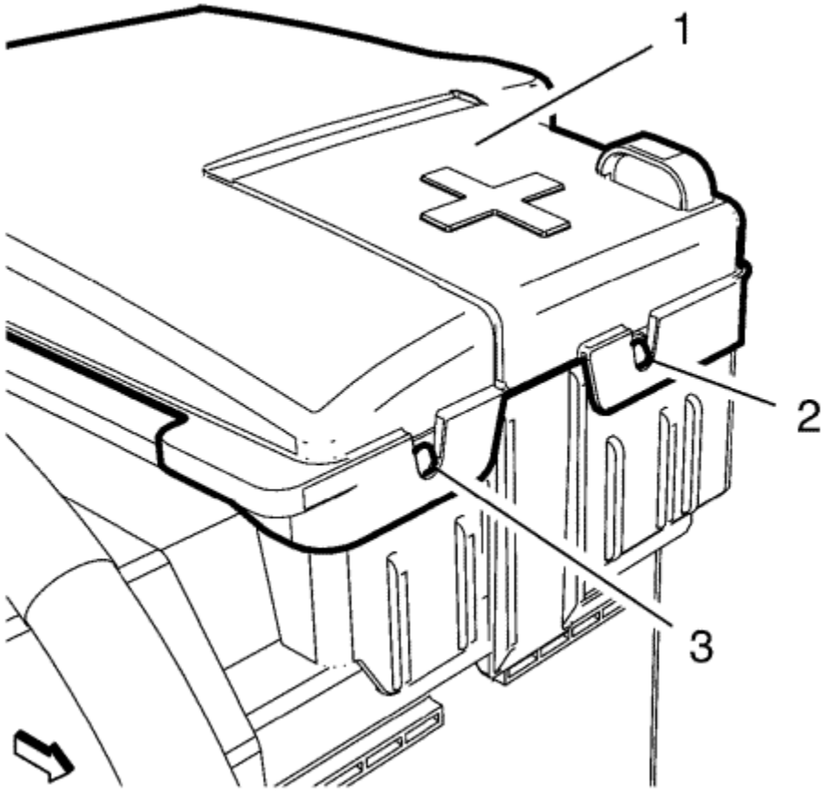

5. Close the battery fuse box cover (1) and lock the retaining tabs (2, 3).
6. Connect the battery negative cable. Refer to Battery Negative Cable Disconnection and Connection .
7. Install the rear compartment floor stowage trim compartment. Refer to Rear Compartment Floor Stowage Trim Compartment Replacement .

Danger: Always perform the High Voltage Disabling procedure prior to servicing any High Voltage component or connection. Personal Protection Equipment (PPE) and proper procedures must be followed.

The High Voltage Disabling procedure will perform the following tasks:

- Identify how to disable high voltage.
- Identify how to test for the presence of high voltage.
- Identify condition under which high voltage is always present and personal protection equipment (PPE) and proper procedures must be followed.

Failure to follow the procedures exactly as written may result in serious injury or death.

8. Enable the high voltage system. Refer to High Voltage Enabling .

&#169© Copyright Chevrolet. All rights reserved

Battery Positive Cable Replacement

Removal Procedure

1. Remove the rear floor stowage compartment. Refer to Rear Compartment Floor Stowage Trim Compartment Replacement .
2. Disconnect the battery negative cable from the battery. Refer to Battery Negative Cable Disconnection and Connection .

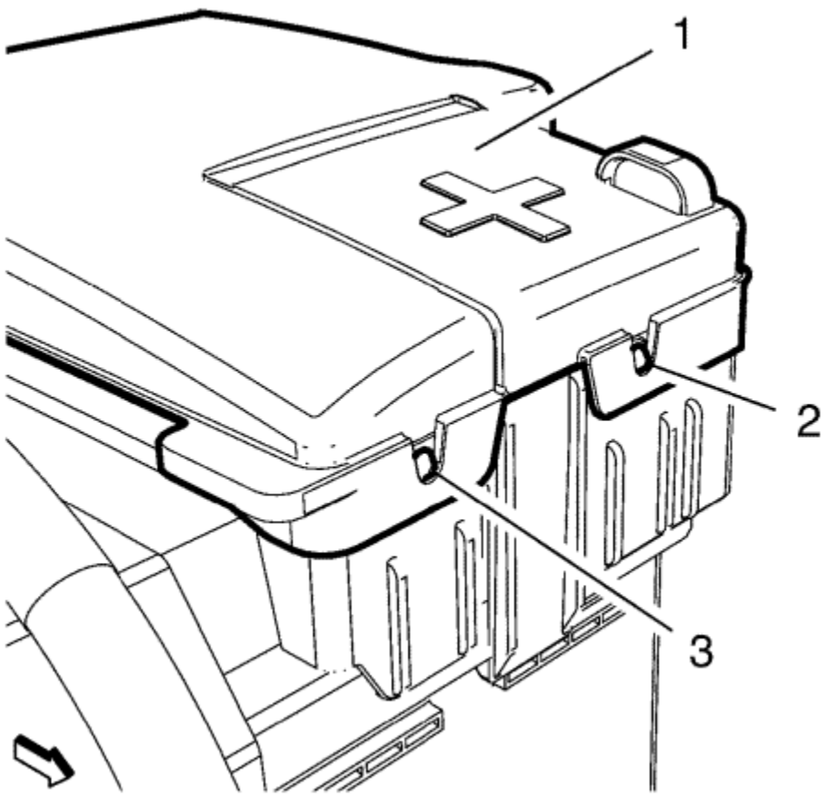

3. Unlock the retaining tab (2) on the battery fuse box cover.
4. Open the battery fuse box flap (1).

Note: Pull the battery fuse box housing. DO NOT pull the flap.

5. Unlock the retaining tab (3) and open the battery fuse box cover.

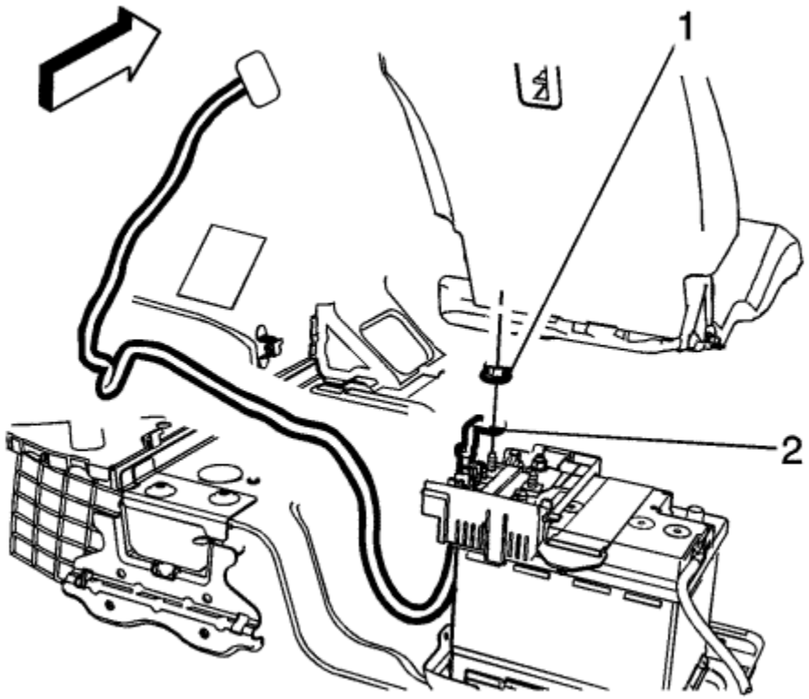

6. Remove the battery positive cable fuse block nut (1) and terminal (2) from the battery fuse block.
7. Remove the quarter inner trim finish panel. Refer to Quarter Inner Trim Finish Panel Replacement .
8. Separate the battery positive cable from the body harness, while working from the rear compartment towards the passenger compartment.

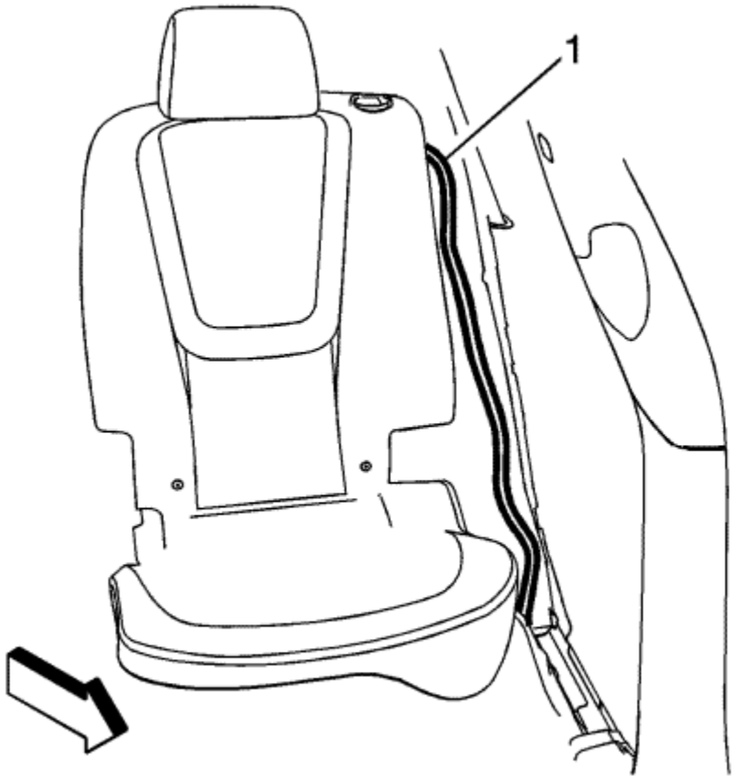

9. Remove the rear side door floor covering retainer. Refer to Rear Side Door Opening Floor Carpet Retainer Replacement .
10. Detach the battery positive cable (1) from the rear passenger compartment.

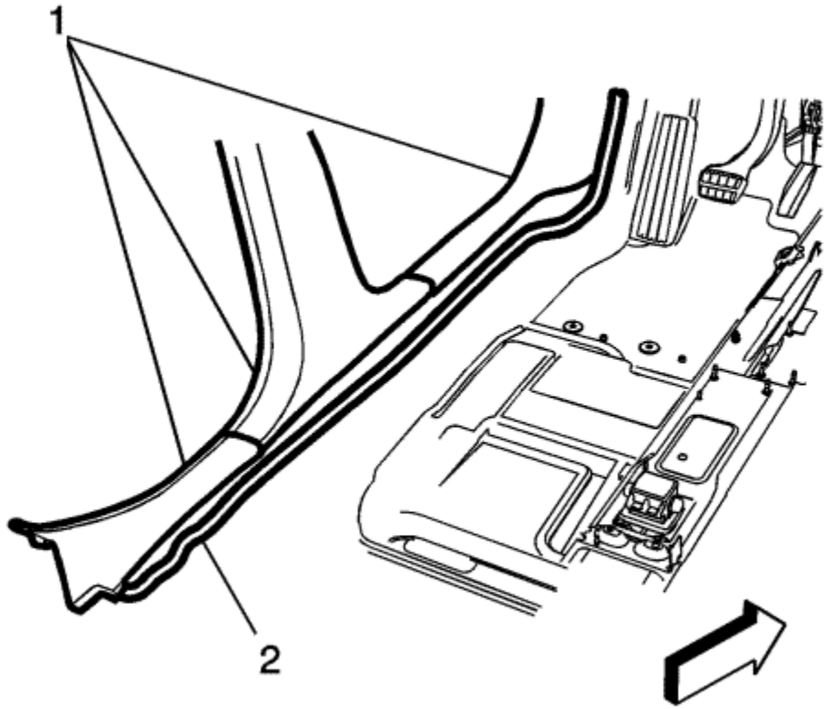

11. Remove the interior trim panels (1). Refer to Centre Pillar Trim Panel Replacement and Front Side Door Opening Floor Carpet Retainer Replacement .
12. Remove the battery positive cable (2) from the left rocker channel.

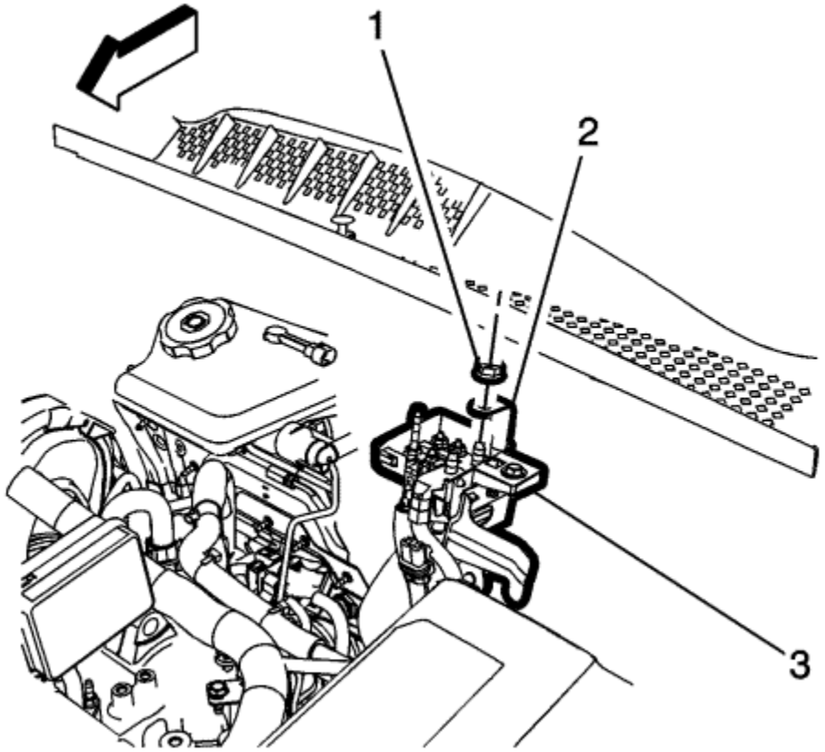

13. Detach the battery positive terminal (2), from the engine wiring junction block (3), with the nut (1).

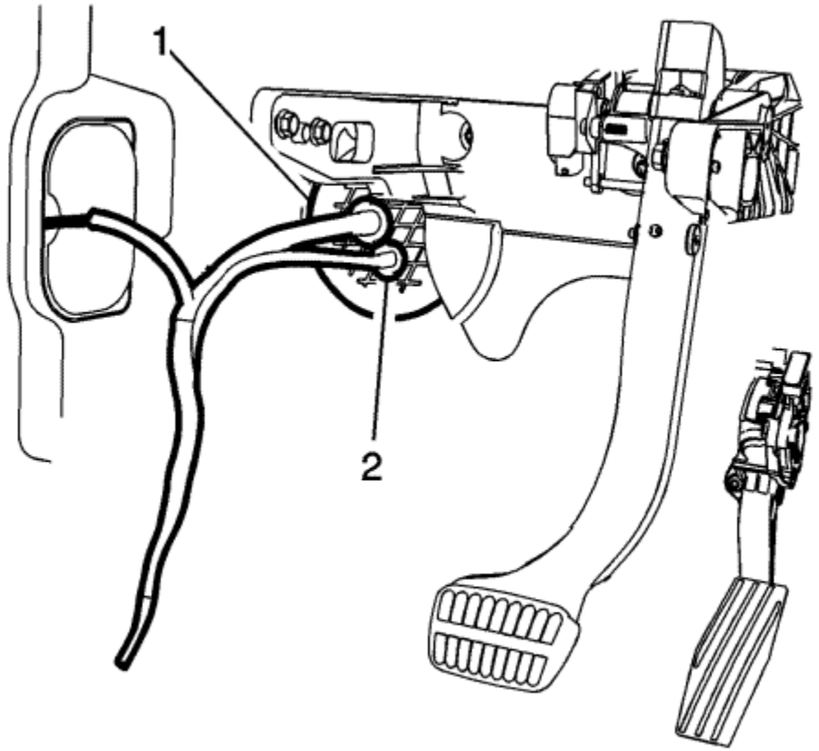

14. Pull the battery positive cable (2) through the harness grommet (1).
15. Remove the battery positive cable from the vehicle.

Installation Procedure

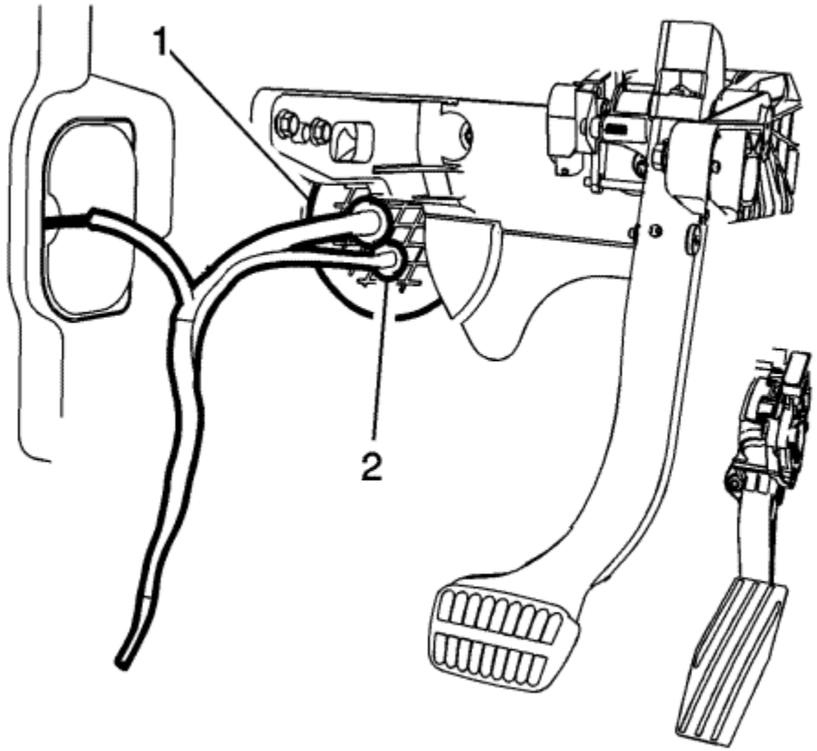

1. Push the battery positive cable terminal (2) through the grommet (1) and into the front engine compartment.

   Caution: Refer to Fastener Caution in the Preface section.

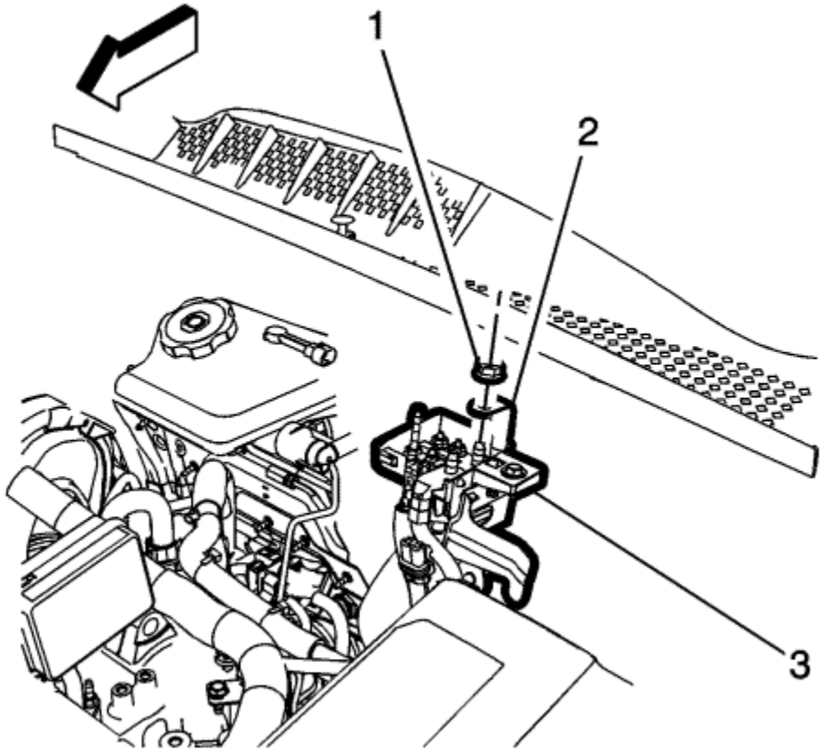

2. Install the battery positive cable terminal (2) to the engine wiring junction block (3). Tighten the nut (1) to **17 N·m (12 lb ft)**.

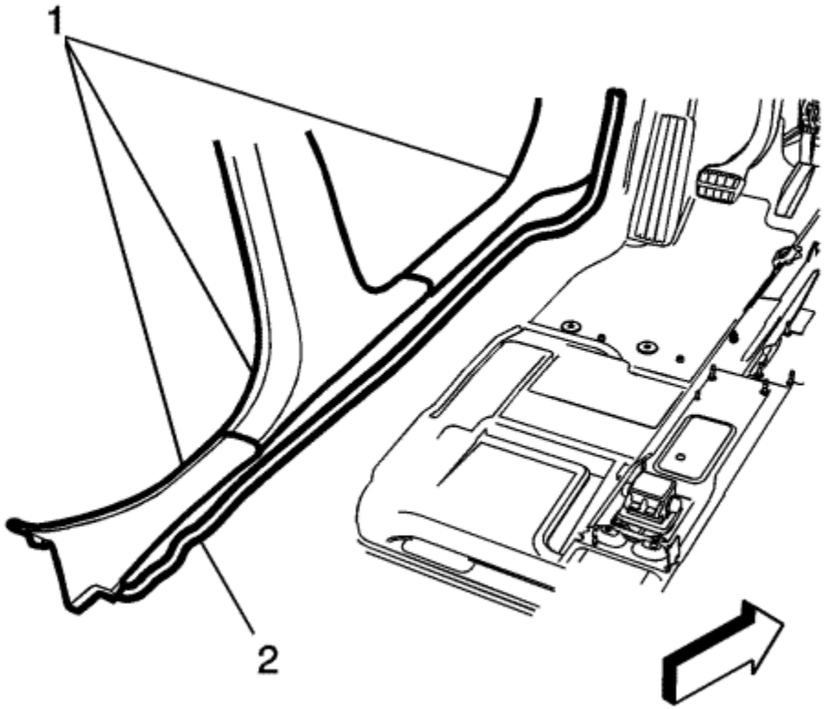

3. Install the battery positive cable into the rocker channel below the interior trim panels (1).

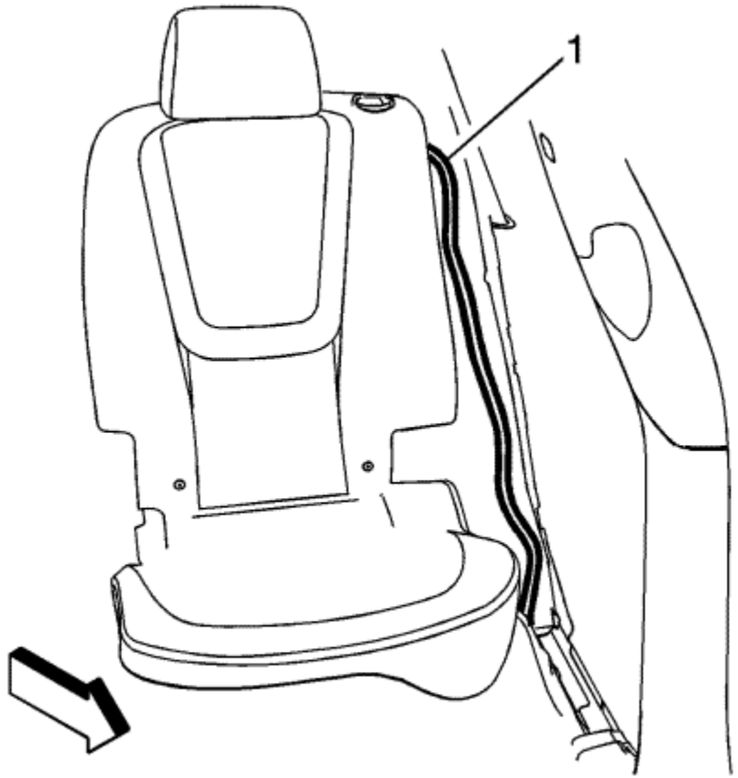

4. Secure the battery positive cable (1) to the body harness, while transfering the remaining cable into the rear compartment.

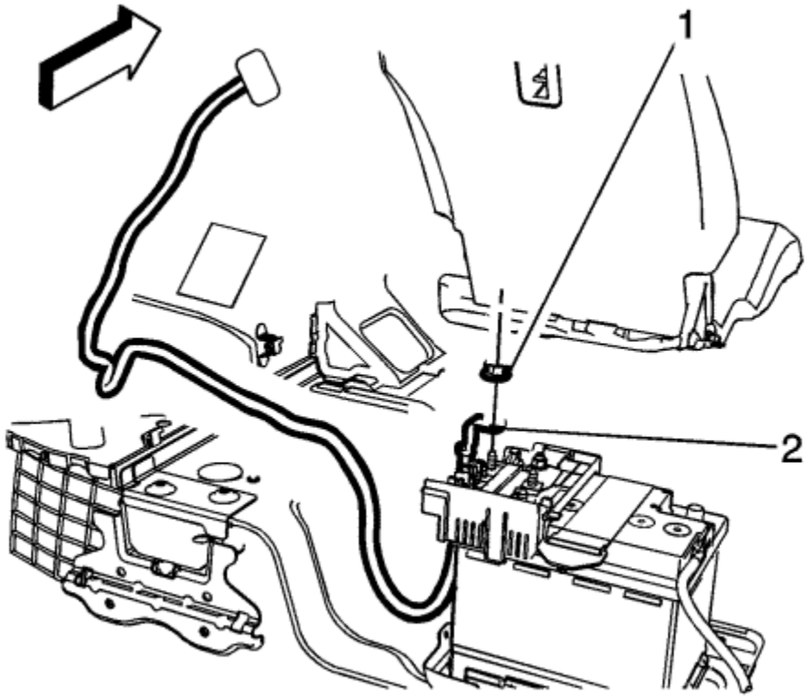

5. Attach the battery positive cable to the body harness along the left rear wheelhouse.
6. Install the battery positive cable terminal (2) to the battery fuse block and tighten nut (1) to **12 N·m (106 lb in)**.

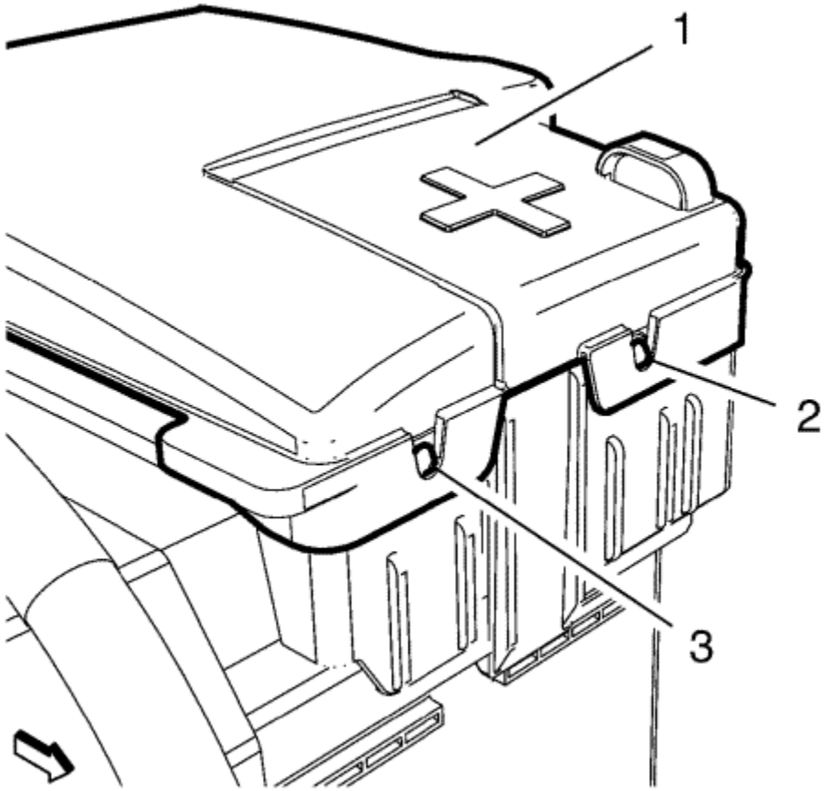

7. Close the battery fuse box cover (1) and lock the retaining tabs (2, 3).
8. Connect the battery negative cable. Refer to Battery Negative Cable Disconnection and Connection
9. Install the quarter inner trim finish panel, rear compartment floor stowage trim panel and the interior trim panels. Refer to Quarter Inner Trim Finish Panel Replacement , Rear Compartment Floor Stowage Trim Compartment Replacement , Rear Side Door Opening Floor Carpet Retainer Replacement , and Front Side Door Opening Floor Carpet Retainer Replacement .

© Copyright Chevrolet. All rights reserved

Battery Replacement

Special Tools

GE-49379 Battery Remover / Installer

For equivalent regional tools, refer to Special Tools .

Disconnect Procedure

Warning: Refer to Battery Disconnect Warning in the Preface section.

1. Turn off all the lamps and accessories.
2. Turn the ignition OFF.
3. Remove the rear compartment floor stowage trim compartment. Refer to Rear Compartment Floor Stowage Trim Compartment Replacement .
4. Disconnect the negative battery cable. Refer to Battery Negative Cable Disconnection and Connection .
5. Remove the battery vent hose.

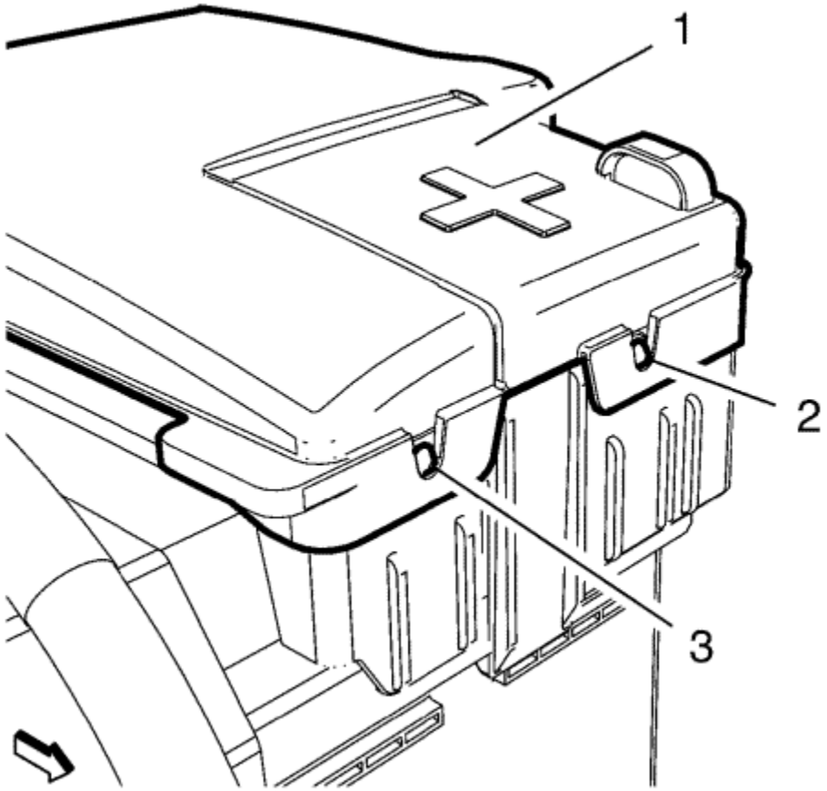

6. Unlock the retaining tab (2) on the battery fuse box cover.
7. Open the battery fuse box flap (1).

   Note: Pull the battery fuse box housing. DO NOT pull the flap.

8. Unlock the retaining tab (3) and open the battery fuse box cover.

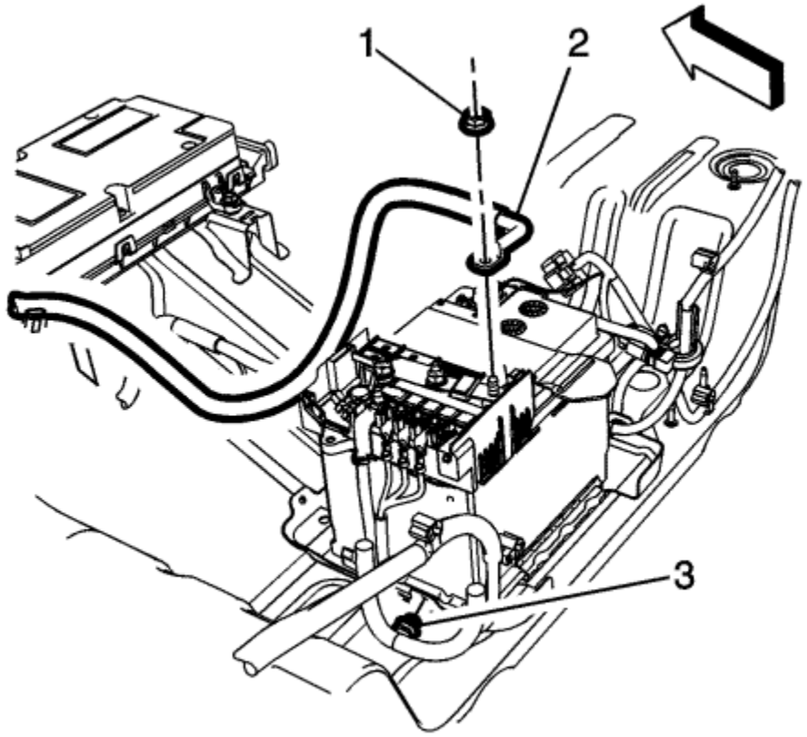

9. Remove the battery positive cable to fuse block nut (1).
10. Reposition the positive battery cable (2) away from the battery.

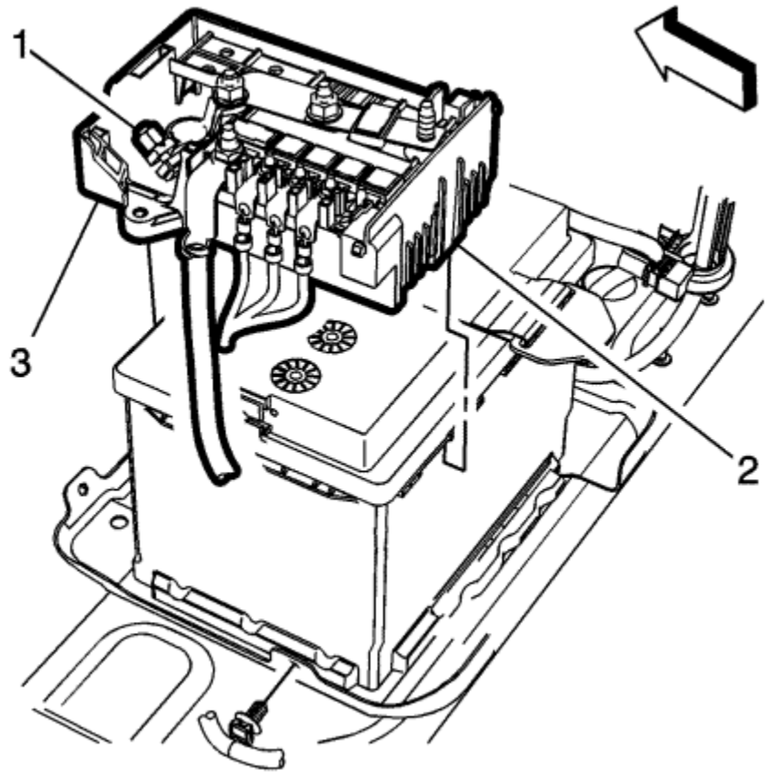

11. Loosen the battery positive clamp nut (1).
12. Remove the fuse block retainer clips (2) and reposition the fuse block (3).

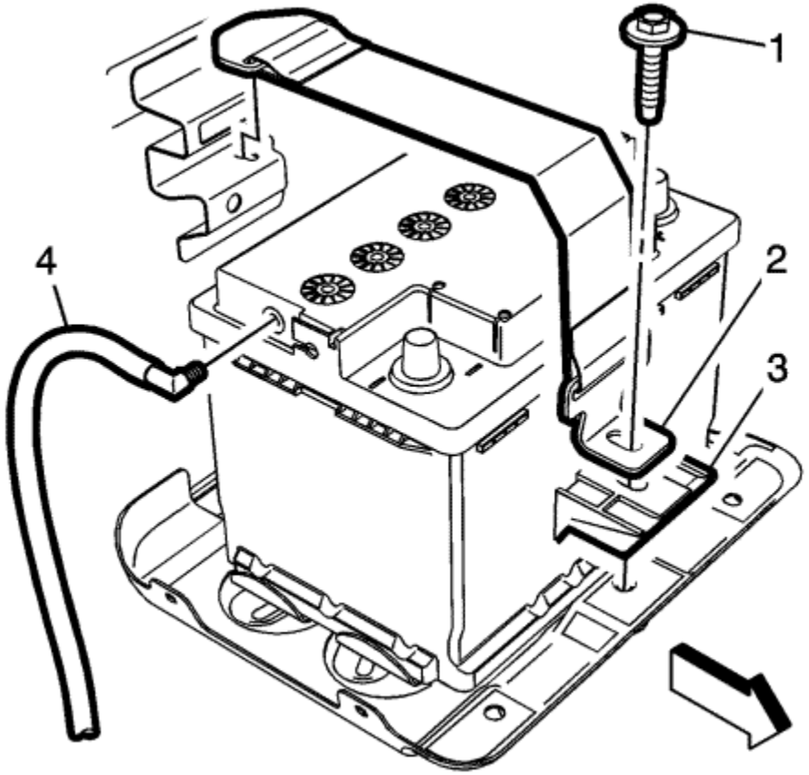

13. Remove the battery retainer bolt (1).
14. Remove the battery hold down strap (2) and the hold down retainer (3).

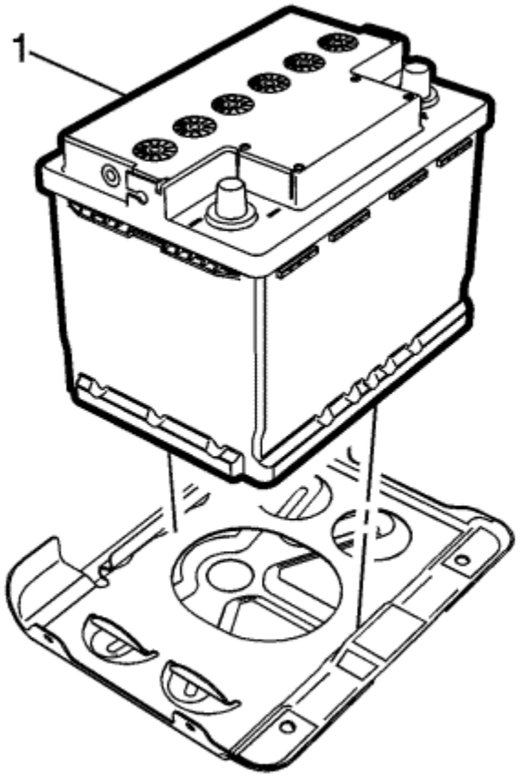

15. Remove the battery (1) from the rear compartment area, using the *GE-49379* remover .

Connect Procedure

Warning: Refer to Battery Disconnect Warning in the Preface section.

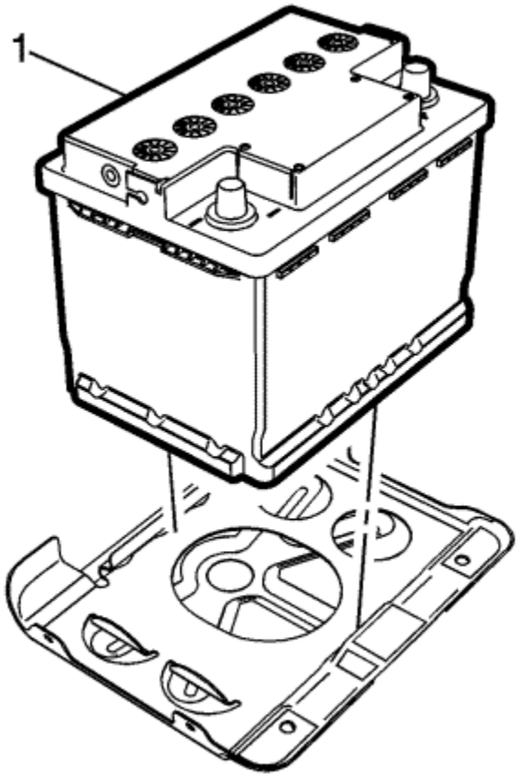

Note: Clean any existing corrosion from the battery terminal and the battery cable end.

1. Position the battery (1) onto the tray with the posts towards the rear of the vehicle, using the *GE-49379* installer .

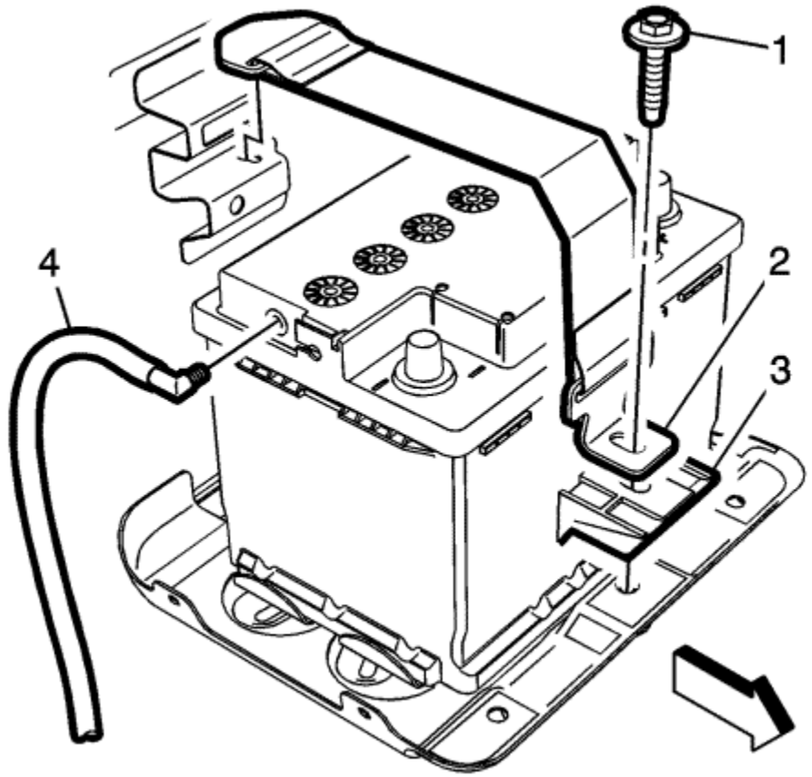

2. Install the battery hold down retainer (3) and hold down strap (2).

   Caution: Refer to Fastener Caution in the Preface section.

3. Tighten the battery retainer bolt (1) to **9 N·m (80 lb in).** .

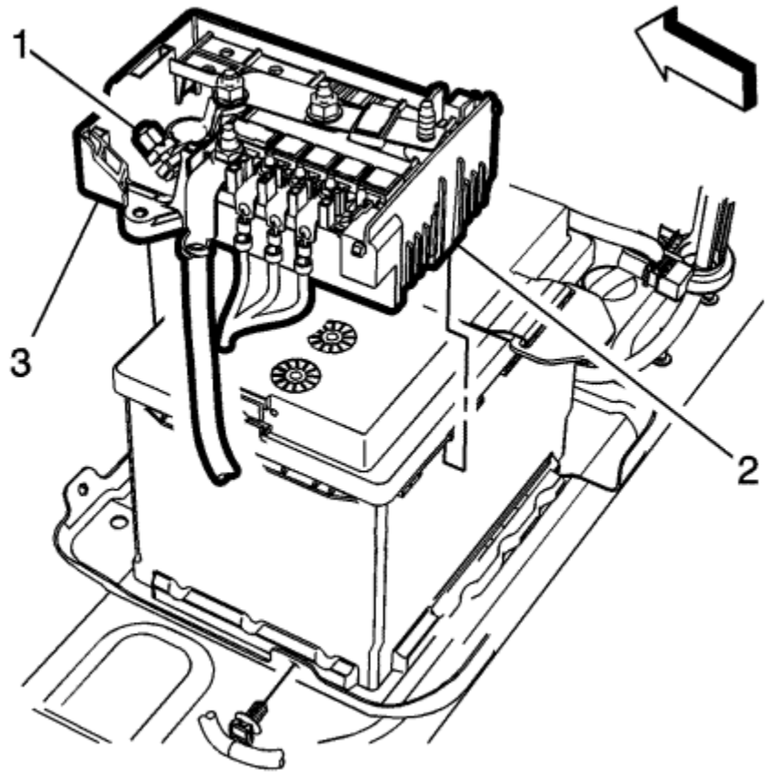

4. Install the fuse block (3) to the top of the battery with tabs (2).
5. Slide the battery clamp (1) onto the battery post and tighten the nut (1) to **9 N·m (80 lb in)**.

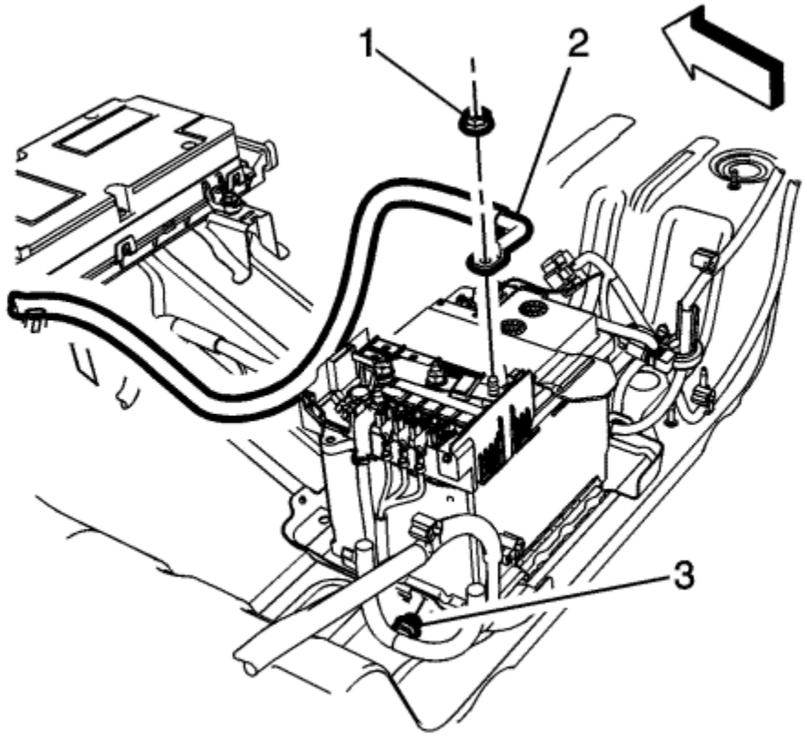

6. Install the battery positive terminal (2) to the fuse block and tighten nut (1) to **9 N·m (80 lb in)**.

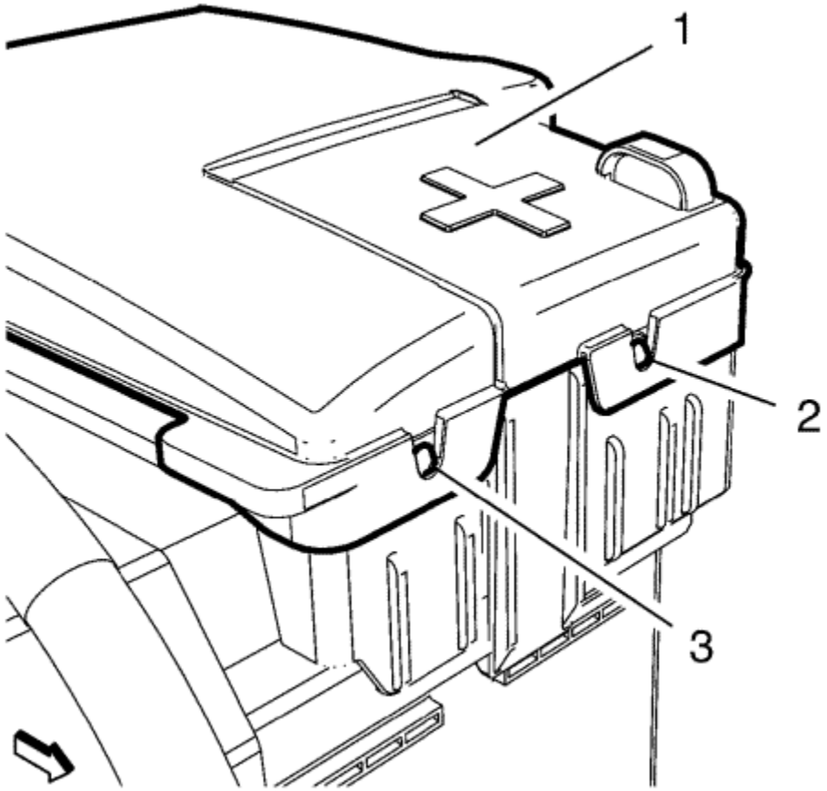

7. Close the battery fuse box cover (1) and lock the retaining tabs (2, 3).
8. Connect the negative battery cable. Refer to Battery Negative Cable Disconnection and Connection .
9. Install the rear compartment floor stowage trim compartment. Refer to Rear Compartment Floor Stowage Trim Compartment Replacement .

© Copyright Chevrolet. All rights reserved

Battery Description and Operation

300 V Battery

For information about the 355 V hybrid drive motor battery, refer to Drive Motor Battery System Description .

Absorbent Glass Mat Battery

This vehicle is equipped with an absorbent glass mat battery. This is similar to current vehicle lead acid flood batteries, except they use glass mats that absorb electrolytes that are pressed between the plates instead of immersing the plates in electrolytes. This allows a smaller, lighter battery with the same amount of power and is less susceptible to heat.

The maximum permissible voltage allowed for the absorbent glass mat battery is 14.8 V (at room temperature).

12 V Battery

Warning: Batteries produce explosive gases, contain corrosive acid, and supply levels of electrical current high enough to cause burns. Therefore, to reduce the risk of personal injury when working near a battery:

- Always shield your eyes and avoid leaning over the battery whenever possible.
- Do not expose the battery to naked flames or sparks.
- Do not allow the battery electrolyte to contact the eyes or the skin. Flush immediately and thoroughly any contacted areas with water and get medical help.
- Follow each step of the jump starting procedure in order.
- Treat both the booster and the discharged batteries carefully when using the jump leads.

Note: Because of the materials used in the manufacture of automotive lead acid batteries, dealers and service shops that handle them are subject to various regulations issued by OSHA, EPA, DOT, and various state or local agencies. Other regulations may also apply in other locations. Always know and follow these regulations when handling batteries.

Batteries that are no longer wanted must be disposed of by an approved battery recycler and must never be thrown in the rubbish or sent to a landfill.

Batteries that are not part of the vehicle itself, not the battery under the bonnet, must only be transported on public streets for business purposes via approved hazardous material transportation procedures.

Battery storage, charging and testing facilities in garages must meet various requirements for ventilation, safety equipment, material segregation, etc.

The maintenance free battery is standard. There are no vent plugs in the cover. The battery is completely sealed except for 2 small vent holes in the side. These vent holes allow the small amount of gas that is produced in the battery to escape.

Battery Ratings

A battery has 2 ratings:

- Cold cranking amperage
- Amperage hours

When a battery is replaced use a battery with similar ratings. Refer to the manufacturer specifications label on the original battery.

Amperage Hours

The amperage hour rating tells you how much amperage is available when discharged evenly over a 20 h period. The amperage hour rating is cumulative, so in order to know how many constant amperes the battery will output for 20 h, you have to divide the amperage hour rating by 20. Example: If a battery has an amperage hour rating of 74, dividing by 20 = 3.75. Such a battery can carry a 3.75 A load for 20 h before dropping to 10.5 V. (10.5 V is the fully discharged level, at which point the battery needs to be recharged.) A battery with an amperage hour rating of 55 will carry a 2.75 A load for 20 h before dropping to 10.5 V.

Cold Cranking Amperage

The cold cranking amperage is an indication of the ability of the battery to crank the engine at cold temperatures. The cold cranking amperage rating is the minimum amperage the battery must maintain for 30 s at -18°C (0°F) while maintaining at least 7.2 V.

&#169© Copyright Chevrolet. All rights reserved

Charging System Description and Operation

12 V Battery

The following information is for the 12 V battery only.

For information about charging the high voltage drive motor batteries, refer to Drive Motor Battery System Description .

Electrical Power Management Overview

The electrical power management system is designed to monitor and control the charging system and send diagnostic messages to alert the driver of possible problems. This electrical power management system primarily utilises existing on board computer capability to maximise the effectiveness of the charging system, manage the load, improve battery state of charge and life, and minimise the systems impact on fuel economy. The electrical power management system performs 3 functions:

- It monitors the battery voltage and estimates the battery condition.
- It takes corrective actions by adjusting the regulated voltage.
- It performs diagnostics and driver notification.

The battery condition is estimated during Vehicle OFF and during Vehicle in Service Mode. During Vehicle OFF the state of charge of the battery is determined by measuring the open circuit voltage. The state of charge is a function of the acid concentration and the internal resistance of the battery, and is estimated by reading the battery open circuit voltage when the battery has been at rest for several hours.

The state of charge can be used as a diagnostic tool to tell the customer or the dealer the condition of the battery. During Vehicle ON mode, the algorithm continuously estimates state of charge based on adjusted net amperage hours, battery capacity, initial state of charge, and temperature.

While running, the battery degree of discharge is primarily determined by a battery current sensor, which is integrated to obtain net amperage hours.

In addition, the electrical power management function is designed to perform regulated voltage control to improve battery state of charge, battery life, and fuel economy. This is accomplished by using knowledge of the battery state of charge and temperature to set the charging voltage to an optimum battery voltage level for recharging without detriment to battery life.

Charging System Components

Drive Motor/Generators

The drive motor/generators are serviceable components located within the transmission housing. When the rotors are spun, an alternating current (AC) is induced into the stator windings. This AC voltage is then sent to the drive motor generator power inverter module where it is converted to high voltage direct current (DC) power. The output of the powertrain interface module is converted into low voltage electrical power by the accessory DC power converter module for use by the vehicles electrical system to maintain electrical loads and battery charge.

Body Control Module (BCM)

The body control module (BCM) is a GMLAN device. It communicates with the engine control module (ECM) and the instrument panel cluster for electrical power management operation. The BCM determines the desired voltage set point and sends the information to the accessory power module. The BCM monitors a battery current sensor, the battery positive voltage circuit, and estimated battery temperature to determine battery state of charge.

Battery Current Sensor

The battery current sensor is a serviceable component that is connected to the negative battery cable at the battery. The battery current sensor is a 3 wire hall effect current sensor. The battery current sensor monitors the battery current. It directly inputs to the BCM. It creates a 5 V pulse width modulation (PWM) signal of 128 Hz with a duty cycle of 0-100%. Normal duty cycle is between 5-95%. Between 0-5% and 95-100% are for diagnostic purposes.

Engine Control Module (ECM)

The ECM receives control decisions based on messages from the BCM.

Instrument Panel Cluster

The instrument panel cluster provides a means of customer notification in case of a failure and a voltmeter. There are 2 means of notification, a charge indicator and a driver information centre message of SERVICE BATTERY CHARGING SYSTEM.

Charging System Operation

The purpose of the charging system is to maintain the battery charge and vehicle loads. There are 6 modes of operation and they include:

- Battery Sulphation Mode
- Normal Mode
- Fuel Economy Mode
- Headlamp Mode
- Voltage Reduction Mode
- Plant Assembly Mode

Battery Sulphation Mode

Battery sulfation mode is used to help maintain the battery life. The charging system will enter a battery sulfation mode which tries to increase the vehicle charging when the charging system voltage is less than 13.2 V for about 30 minutes. Once in this mode, the BCM will set a targeted output voltage between 13.9-15.5 V for about 5 minutes. Following this 5 minutes, the BCM will then determine which mode to enter depending on the system voltage requirements.

Normal Mode

The BCM will enter Normal Mode whenever one of the following conditions are met:

- The wipers are ON for more than 3 s.
- GMLAN Climate Control Voltage Boost Mode Request is true, as sensed by the HVAC control head. High speed cooling fan, rear demister and HVAC high speed blower operation can cause the BCM to enter the Charge Mode.
- The estimated battery temperature is less than 0°C (32°F).
- Vehicle Speed is greater than 145 km/h (90 mph)
- Current Sensor Fault Exists
- System Voltage was determined to be below 12.56 V
- Tow/Haul Mode is enabled

When any one of these conditions is met, the system will set targeted generator output voltage to a charging voltage between 13.9-15.5 V, depending on the battery state of charge and estimated battery temperature.

Fuel Economy Mode

The BCM will enter Fuel Economy Mode when the ambient air temperature is at least 0°C (32°F) but less than or equal to 80°C (176°F), the calculated battery current is greater than -8 A but less than 5 A, and the battery state of charge is greater than or equal to 85%. Its targeted accessory power module set point voltage is the open circuit voltage of the battery and can be between 12.6-13.2 V. The BCM will exit this mode and enter Normal Mode when any of the conditions described above are present.

Headlamp Mode

The BCM will enter Headlamp Mode whenever the main or dipped beam headlamps are ON. Voltage will be regulated between 13.9-14.5 V.

Voltage Reduction Mode

The BCM will enter Voltage Reduction Mode when the calculated battery temperature is above 0°C (32°F) and the calculated battery current is greater than -7 A but less than 1 A. Its targeted accessory power module set point voltage is 12.9-13.2 V. The BCM will exit this mode once the criteria are met for Normal Mode.

Plant Assembly Mode

The BCM will increase charging voltage for the first 500 mi of operation in an effort to ensure that the 12 V battery is fully charged when the vehicle is delivered to the customer.

Instrument Panel Cluster Operation

Charge Indicator Operation

The instrument panel cluster illuminates the charge indicator and displays a charging system warning message in the driver information centre when the one or more of the following occurs:

- The engine control module (ECM) detects system voltage less than 11 V or greater than 16 V. The instrument panel cluster receives a GMLAN message from the ECM requesting illumination.
- The BCM determines that the system voltage is less than 11 V or greater than 16 V.
- The instrument panel cluster receives a GMLAN message from the BCM indicating there is a system voltage range concern.
- The instrument panel cluster performs the displays test at the start of each Vehicle ON cycle. The indicator illuminates for approximately 3 s.
- Vehicle ON, with the engine OFF.

Battery Voltage Gauge Operation

The instrument panel cluster displays the system voltage as received from the BCM over the GMLAN serial data circuit. If there is no communication with the BCM then the gauge will indicate minimum.

This vehicle is equipped with a regulated voltage control system. This will cause the voltmeter to fluctuate between 12-14 V, as opposed to non regulated systems which usually maintain a more consistent reading of 14 V. This fluctuation with the regulated voltage control system is normal system operation and NO repairs should be attempted.

SERVICE BATTERY CHARGING SYSTEM

The BCM and the ECM will send a GMLAN message to the driver information centre for the SERVICE BATTERY CHARGING SYSTEM message to be displayed. It is displayed whenever the charge indicator is commanded ON due to a failure.

&#169© Copyright Chevrolet. All rights reserved

Electrical Power Management Description and Operation

Electrical Power Management

The electrical power management is used to monitor and control the charging system and alert the driver of possible problems within the charging system. The electrical power management system makes the most efficient use of the generator output, improves the battery state-of-charge, extends battery life, and manages system electrical loads.

The load shed operation is a means of reducing electrical loads during a low voltage or low battery state-of-charge condition.

The idle boost operation is a means of improving generator performance during a low voltage or low battery state-of-charge condition.

Each electrical power management function, either idle boost or load shed, is discrete. No two functions are active at the same time. Idle boost is activated in incremental steps, idle boost 1 must be active before idle boost 2 can be active. The criteria used by the body control module (BCM) to regulate electrical power management are outlined below:

Function	Battery Temperature Calculation	Battery Voltage Calculation	Amp-Hour Calculation	Action Taken
Idle Boost 1 Start	Less Than -15°C (5°F)	Less Than 13 V	-	First level Idle boost requested
Idle Boost 1 Start	-	-	Battery has a net loss greater than 0.6 AH	First level Idle boost requested
Idle Boost 1 Start	-	Less Than 10.9 V	-	First level Idle boost requested
Idle Boost 1 End	Greater Than -15°C (5°F)	Greater Than - 12 V	Battery has a net loss less than 0.2 AH	First level Idle boost request cancelled
Load Shed 1 Start	-	-	Battery has a net loss of 4 AH	Rear Defrost, Heated Mirrors, Heated Seats cycled OFF for 20% of their cycle
Load Shed 1 Start	-	Less Than 10.9 V	-	Rear Defrost, Heated Mirrors, Heated Seats cycled OFF for 20% of their cycle
Load Shed 1 End	-	Greater Than 12 V	Battery has a net loss of less than 2 AH	Clear Load Shed 1

Idle Boost 2 Start	-	-	Battery has a net loss greater than 1.6 AH	Second level Idle boost requested
Idle Boost 2 Start	-	Less Than 10.9 V	-	Second level Idle boost requested
Idle Boost 2 End	-	Greater Than 12 V	Battery has a net loss less than 0.8 AH	Second level Idle boost request cancelled
Idle Boost 3 Start	-	-	Battery has a net loss of 10.0 AH	Third level Idle boost requested
Idle Boost 3 Start	-	Less Than 10.9 V	-	Third level Idle boost requested
Idle Boost 3 End	-	Greater Than 12 V	Battery has a net loss of less than 6.0 AH	Third level Idle boost request cancelled
Load Shed 2 Start	-	Less Than 10.9 V	Battery has a net loss greater than 12 AH	Rear Defrost, Heated Mirrors, Heated Seats cycled OFF for 50% of their cycle. The BATTERY SAVER ACTIVE message will be displayed on the DIC
Load Shed 2 Start	-	Less Than 10.9 V	-	Rear Defrost, Heated Mirrors, Heated Seats cycled OFF for 50% of their cycle. The BATTERY SAVER ACTIVE message will be displayed on the DIC
Load Shed 2 End	-	Greater Than 12.6 V	Battery has a net loss of less than 10.5 AH	Clear Load Shed 2
Load Shed 3 Start	-	Less Than 11.9 V	Battery has a net loss greater than 20 AH	Rear Defrost, Heated Mirrors, Heated Seats cycled OFF for 100% of their cycle. The BATTERY SAVER ACTIVE message will be displayed on the DIC
Load Shed 3 End	-	Greater Than 12.6 V	Battery has a net loss of less than 15 AH	Clear Load Shed 3

© Copyright Chevrolet. All rights reserved

Starting System Description and Operation

The HQ1 Hybrid System does not use a conventional starter. Refer to Hybrid Modes of Operation Description for information about the starting system.

© Copyright Chevrolet. All rights reserved

Special Tools

Illustration	Tool Number/Description
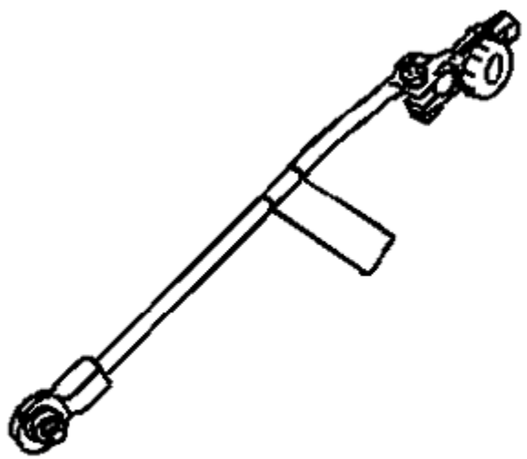	EL 38758 EL 50074 J 38758 Parasitic Draw Test Switch
	EL 50313 EL 42000 EL 50076 J 42000 Battery Tester

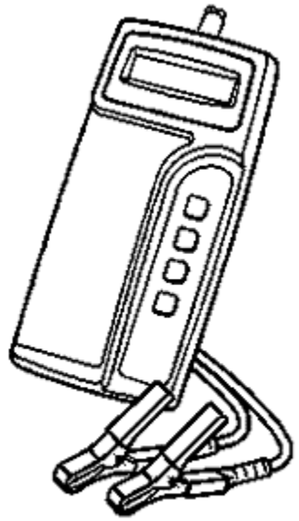	
	EL 48900 High Voltage Safety Kit

© Copyright Chevrolet. All rights reserved

Fastener Tightening Specifications

Application	Specification	
	Metric	English
Catalytic Converter-to-Exhaust Muffler Clamp	55 N·m	41 lb ft
Exhaust Brace-to-Block Bolt	22 N·m	16 lb ft
Exhaust Heat Shield Retainers	9 N·m	80 lb in
Exhaust Manifold with Catalytic Converter-to- Brace Bolt	22 N·m	16 lb ft
Exhaust Manifold with Catalytic Converter-to-Cylinder Head Nut	22 N·m	16 lb ft
Exhaust Manifold with Catalytic Converter-to-Catalytic Converter Nut	22 N·m	16 lb ft
Exhaust Muffler Rear Hanger Bracket Bolts	22 N·m	16 lb ft

© Copyright Chevrolet. All rights reserved

Symptoms - Engine Exhaust

- Review the Exhaust System Description and Operation in order to familiarise yourself with the system functions. Refer to Exhaust System Description .
- All diagnostics on a vehicle should follow a logical process. Strategy Based diagnostics is a uniform approach for repairing all systems. The diagnostic flow is the place to start when repairs are necessary and may always be used in order to resolve a system problem.

Visual/Physical Inspection

- Inspect for aftermarket or non-OEM devices such as, but not including; tailpipe extensions, headers, and exhaust cutouts. This could affect the operation and proper performance of the exhaust system.
- Verify the exact operating conditions under which the concern exists. Note factors such as engine RPM, engine temperature, engine load, and frequency of concern.
- Inspect the easily accessible or visible system components for obvious damage or conditions, which could cause any symptom.

Intermittents

Test the vehicle under the same conditions that the customer reported in order to verify the system is operating as designed.

Symptom List

- Loss of power--Refer to Restricted Exhaust .
- Poor acceleration--Refer to Restricted Exhaust .
- Poor fuel economy--Refer to Restricted Exhaust .
- Excessive smoke-diesel--Refer to Restricted Exhaust .
- Exhaust hissing noise--Refer to Exhaust Leakage .
- Exhaust popping noise--Refer to Exhaust Leakage .
- Exhaust rattle noise--Refer to Exhaust Noise .
- Loud Exhaust noise--Refer to Exhaust Noise .
- Exhaust buzz, groan, hum noise--Refer to Exhaust Noise .

&#169© Copyright Chevrolet. All rights reserved

Restricted Exhaust

Diagnostic Aids

A quick check of exhaust flow will help determine for gasoline engines.

Test Description

The numbers below refer to the step numbers on the diagnostic table.

3. The exhaust system has very low back pressure under normal conditions. If the exhaust system is restricted, a significant increase in the exhaust pressure is noticed on the exhaust back pressure gauge.

   Removing the heated oxygen sensor may set a DTC. When finishing this diagnostic table, be sure to clear all codes.

4. This step will isolate the catalytic converter from the remainder of the exhaust system.

7. Confirming that the condition has been fixed is essential. If the symptom still exists and the vehicle has a dual exhaust system, proceed to Step 2 and repeat diagnostic procedure on the opposite exhaust pipe.

Step	Action	Value(s)	Yes	No
1	Did you verify the customers complaint?	-	Go to Step 2	-
2	Did you review the exhaust symptoms diagnostic information and perform the necessary inspections?	-	Go to Step 3	Go to Symptoms - Engine Exhaust
3	1. Remove the heated oxygen sensor 1. Refer to Heated Oxygen Sensor Replacement - Sensor 1 . 2. Install the gauge in place of the heated oxygen sensor 1. 3. Engine running, increase and monitor the engine speed at 2,000 RPM. 4. Observe the exhaust system back pressure reading on the gauge. Does the reading exceed the specified value?	14 kPa (2 psi)	Go to Step 4	Go to Step 7
4	1. Vehicle OFF. 2. Remove the gauge. 3. Install the heated oxygen sensor 1. Refer to Heated Oxygen Sensor Replacement - Sensor 1 . 4. Remove the heated oxygen sensor 2. Refer to Heated Oxygen Sensor Replacement - Sensor 2 . 5. Install the gauge in place of the heated oxygen sensor 2.	-		

	6. Engine running,increase and monitor the engine speed at 2,000 RPM. 7. Observe the exhaust system back pressure reading on the gauge. Does the reading exceed the specified value?		Go to Step 5	Go to Step 6
5	Inspect the exhaust system for the following conditions: • Damage in the exhaust pipe. • Debris in the exhaust pipe. • Muffler or resonator internal failure. • Two-layer exhaust pipe separation. Did you find and correct the condition?	-	Go to Step 7	-
6	Replace the catalytic converter. Refer to Catalytic Converter Replacement . Did you find and correct the condition?	-	Go to Step 7	-
7	1. Remove the gauge. 2. Install the heated oxygen sensor 2. Refer to Heated Oxygen Sensor Replacement - Sensor 2 . 3. Clear any DTCs. 4. Road test the vehicle in order to verify the repair. Did you correct the condition?	-	System OK	Go to Step 2

&#169© Copyright Chevrolet. All rights reserved

Exhaust Leakage

Problem	Action
Warning: While engine is operating, the exhaust system will become extremely hot. To prevent burns avoid contacting a hot exhaust system. DEFINITION: An exhaust leak may show stains at the area of the leak. The leak may be felt by holding a hand close to the suspected areas or using a smoke pencil. The leak may make a popping or hissing noise. Refer to Symptoms - Engine Exhaust prior to beginning this table.	
Misaligned or improperly installed exhaust system components	Align and tighten the components to the specifications. Refer to Fastener Tightening Specifications .
Exhaust leaks at the following connections: • Exhaust manifold to pipe • Flanges • Pipe clamps	Tighten the components to the specifications. Refer to Fastener Tightening Specifications .
Seals or gaskets leaking. • Exhaust manifold to cylinder head • Exhaust pipes to exhaust manifold • Catalytic converter connection • EGR connections • AIR connections to the exhaust manifold or cylinder head	Replace the leaking seal or gasket. Refer to the affected components procedure for service.
Irregularities at the mating surfaces on the flange connections	Repair as required or replace the affected component. Refer to the affected components procedure for service.
Exhaust manifold cracked or broken	Replace the exhaust manifold. Refer to Exhaust Manifold with Catalytic Converter Replacement .
Exhaust system component connection welds leaking	Replace the leaking component. Refer to the affected component's procedure for service.
Silencer or resonator, if equipped, damaged or leaking at the seams	Replace the affected silencer. Refer to Exhaust Rear Silencer Replacement .

&#169© Copyright Chevrolet. All rights reserved

Exhaust Noise

Condition	Action
Warning: While engine is operating, the exhaust system will become extremely hot. To prevent burns avoid contacting a hot exhaust system. DEFINITION: An audible or physical noise due to a faulty component or damaged components causing a loose or misaligned exhaust system resulting in a rattle or vibration noise, i.e. buzz, groan, hum. Refer to Symptoms - Engine Exhaust prior to beginning this table.	
Popping or hissing noise	Exhaust leak. Refer to Exhaust Leakage .
Loud exhaust	1. Compare to a known good vehicle. 2. Inspect for a damaged or failed silencer. 3. Replace the faulty silencer. Refer to Exhaust Rear Silencer Replacement .
External rattle or vibration noise	1. Inspect for a bent or loose hanger, loose heat shield, or loose clamp. 2. Inspect for an exhaust pipe causing interference. 3. Repair or replace the affected component. Refer to the affected component's service procedure.
Internal rattle	1. Test the components by tapping with a rubber mallet to confirm a rattle. 2. Replace the faulty catalytic converter, or silencer. Refer to one of the following procedures: • Catalytic Converter Replacement • Exhaust Rear Silencer Replacement

&#169© Copyright Chevrolet. All rights reserved

Exhaust Manifold with Catalytic Converter Replacement

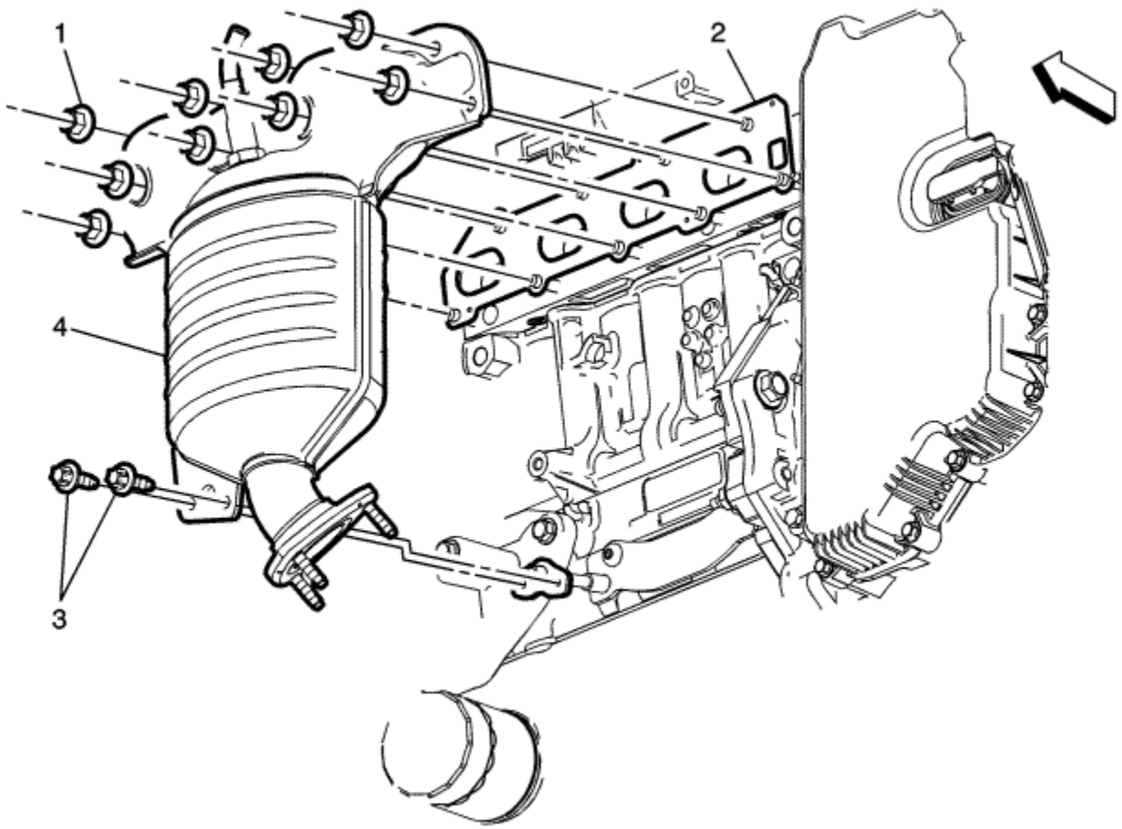

Callout	Component Name
Danger: Do not use a service jack in locations other than those specified to lift this vehicle. Lifting the vehicle with a jack in those other locations could cause the vehicle to slip off the jack and roll; this could cause injury or death. **Warning:** Refer to Hot Exhaust System Warning in the Preface section.	

Preliminary Procedures

1. Raise and support the vehicle. Refer to Lifting and Jacking the Vehicle .
2. Disconnect the heated oxygen sensor. Refer to Heated Oxygen Sensor Replacement - Sensor 1 .
3. Remove the catalytic converter. Refer to Catalytic Converter Replacement .

1	Catalytic Converter Nut (Qty: 8) **Caution:** Refer to Fastener Caution in the Preface section. **Tighten** 22 N·m (16 lb ft)
2	Exhaust Gasket **Tip** Replace the gasket with a NEW one.
3	Exhaust Manifold Brace Bolt (Qty: 2) **Tighten** 22 N·m (16 lb ft)
4	Exhaust Manifold with Catalytic Converter **Tip** If replacing the catalytic converter, transfer the heated oxygen sensor over to the new catalytic converter.

© Copyright Chevrolet. All rights reserved

Exhaust System Replacement

Removal Procedure

Danger: Do not use a service jack in locations other than those specified to lift this vehicle. Lifting the vehicle with a jack in those other locations could cause the vehicle to slip off the jack and roll; this could cause injury or death.

Warning: Refer to Hot Exhaust System Warning in the Preface section.

Warning: Refer to Exhaust Service Warning in the Preface section.

1. Raise and support the vehicle. Refer to Lifting and Jacking the Vehicle .
2. Lower the rear suspension to gain clearance for the exhaust system removal. Refer to Rear Axle Replacement .

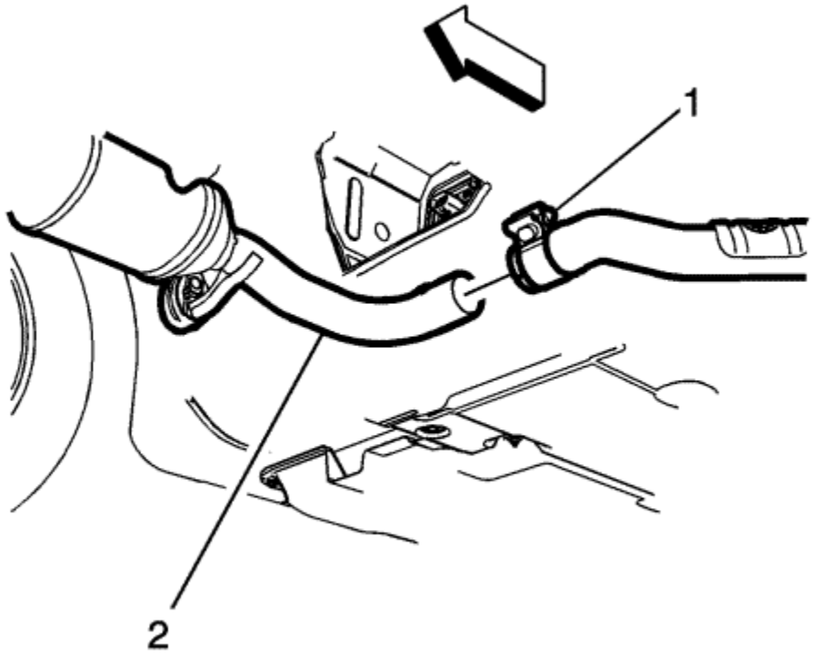

3. Loosen the exhaust muffler clamp nut (1).
4. Remove the exhaust muffler from the catalytic converter (2).

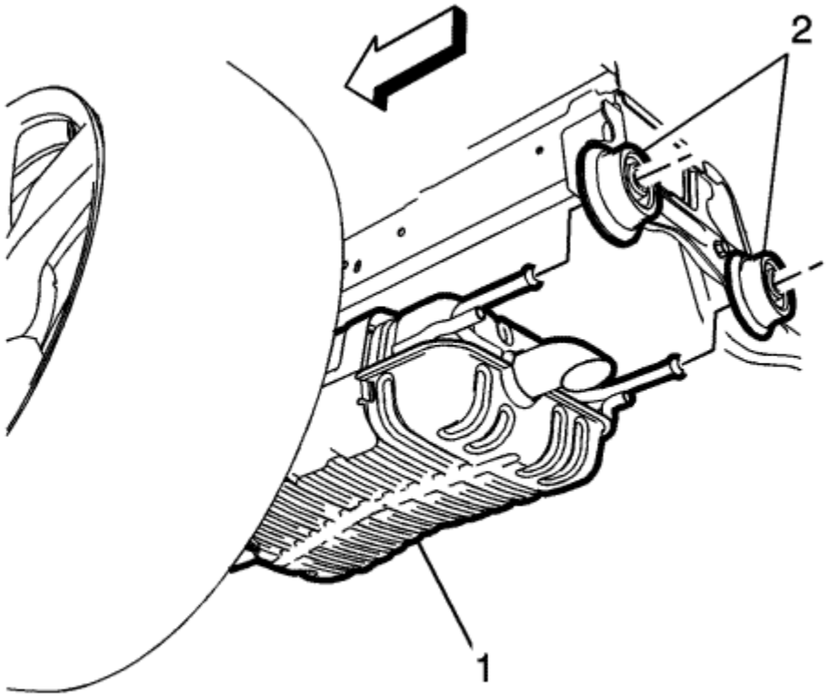

5. Remove the rear exhaust muffler (1) from the rear exhaust hanger isolators (2)..

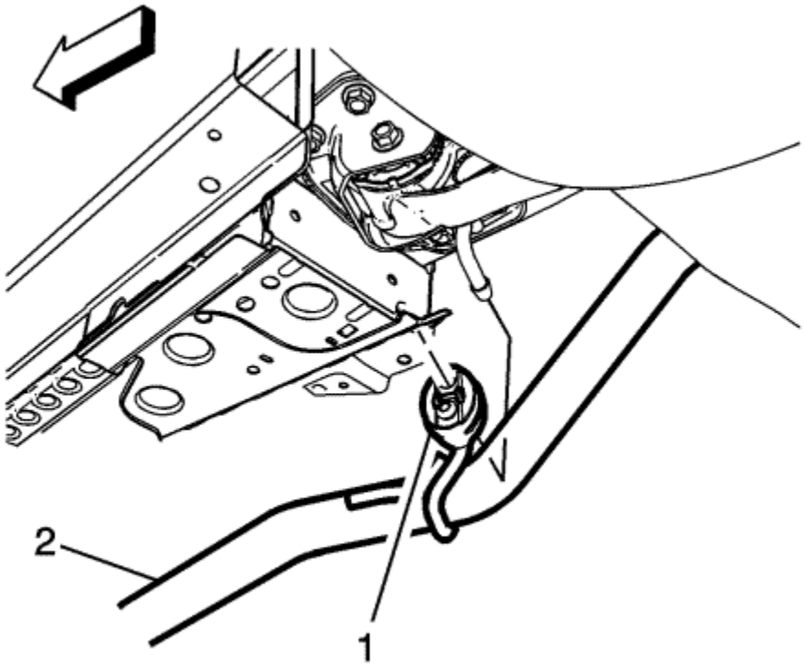

6. Remove the exhaust muffler isolator (1) from the exhaust isolator rod.

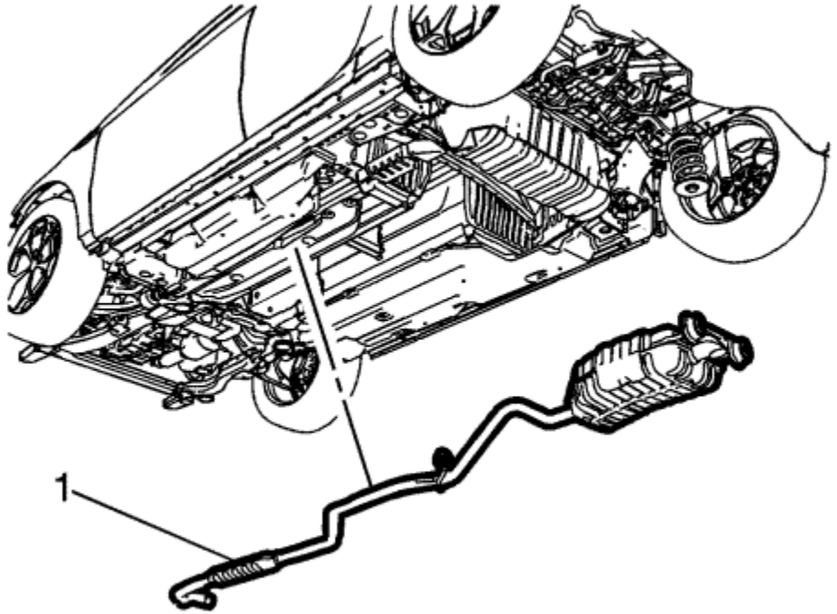

7. With the aid of an assistant, carefully lower the exhaust muffler assembly (1).

Installation Procedure

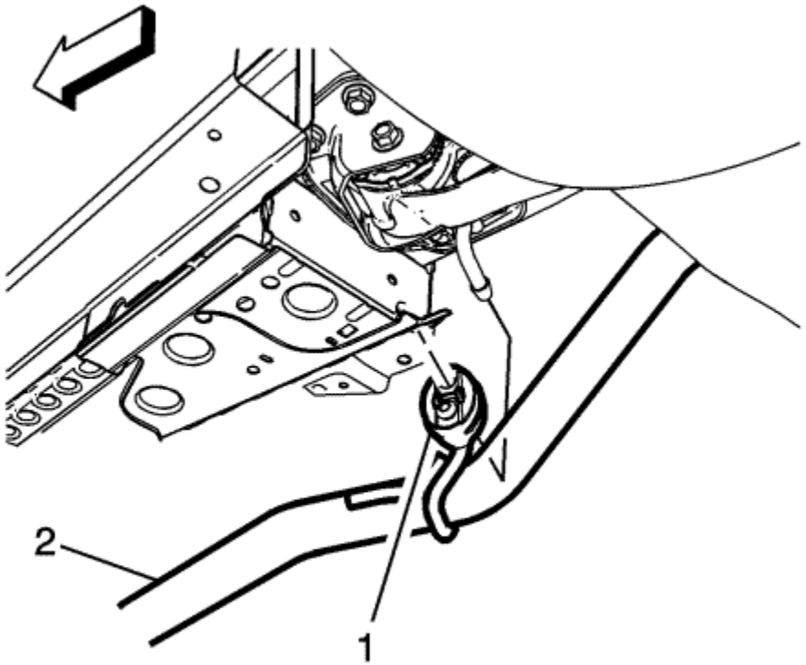

Note: Lubricate the isolator and rod for ease of assembly.

1. With the aid of an assistant, position the exhaust muffler isolator (1) onto the exhaust muffler isolator rod.

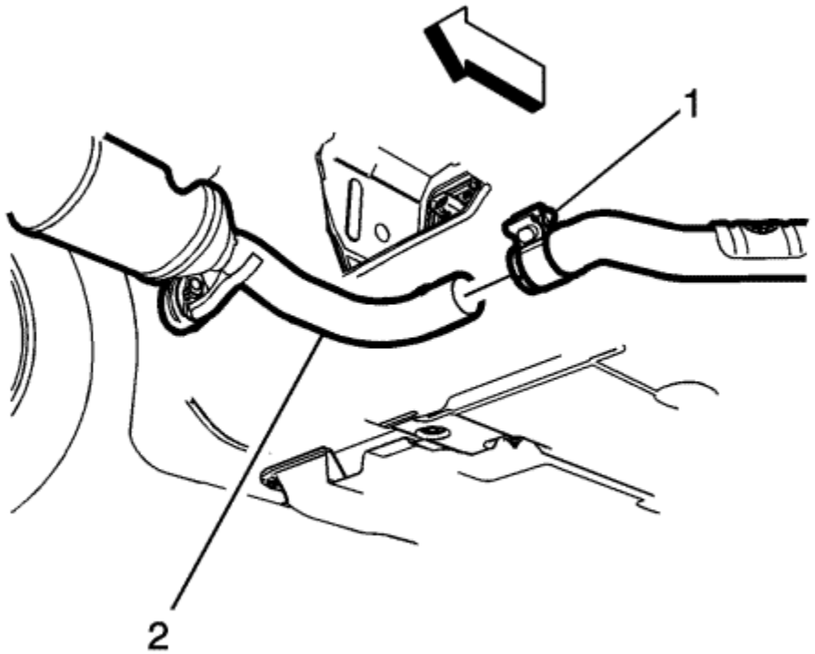

Note: Make sure the exhaust muffler clamp is fully seated into the slot on the catalytic converter before tightening the exhaust clamp nut.

2. Slide the exhaust muffler clamp (1) onto the 3-way catalytic converter (2).

   Caution: Refer to Fastener Caution in the Preface section.

3. Tighten the exhaust muffler clamp to **55 N·m (41 lb ft)**

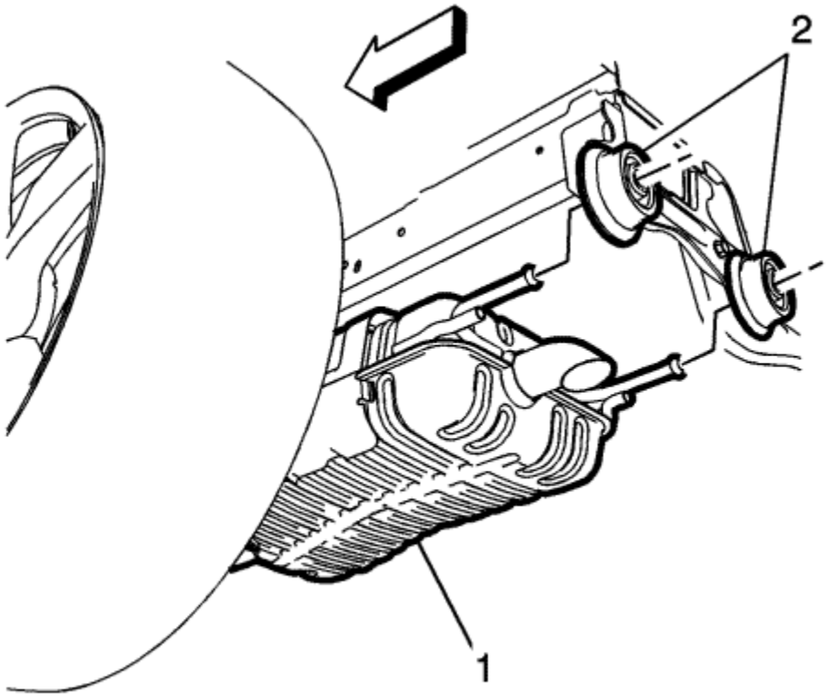

4. Install the rear exhaust muffler (1) into the rear exhaust isolators (2).

   Note: Lubricate the exhaust isolator rods for ease of assembly.

5. Raise the rear suspension. Refer to Rear Axle Replacement .
6. Start the engine and check for exhaust leaks.

© Copyright Chevrolet. All rights reserved

Catalytic Converter Replacement

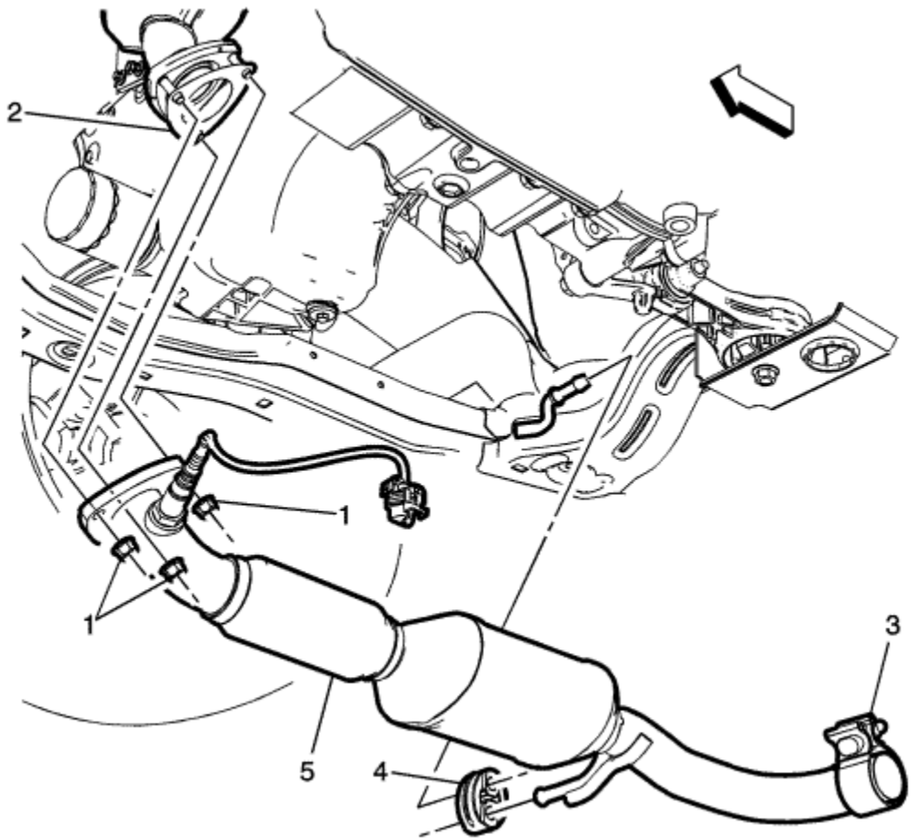

Callout	Component Name
Danger: Do not use a service jack in locations other than those specified to lift this vehicle. Lifting the vehicle with a jack in those other locations could cause the vehicle to slip off the jack and roll; this could cause injury or death. **Warning:** Refer to Hot Exhaust System Warning in the Preface section.	

Preliminary Procedures

1. Raise and support the vehicle. Refer to Lifting and Jacking the Vehicle .
2. Disconnect the heated oxygen sensor. Refer to Heated Oxygen Sensor Replacement - Sensor 2 .
3. Remove the exhaust muffler clamp. Refer to Exhaust System Replacement .

1	Catalytic Converter Nut (Qty: 3) **Caution:** Refer to Fastener Caution in the Preface section. **Tighten** 22 N·m (16 lb ft)
2	Exhaust Gasket **Tip** Replace the gasket with a NEW one.
3	Exhaust Clamp **Tighten** 55 N·m (41 lb ft)
4	Exhaust Isolator
5	Catalytic Converter **Tip** If replacing the catalytic converter, transfer the heated oxygen sensor over to the new catalytic converter.

© Copyright Chevrolet. All rights reserved

Catalytic Converter Brace Replacement

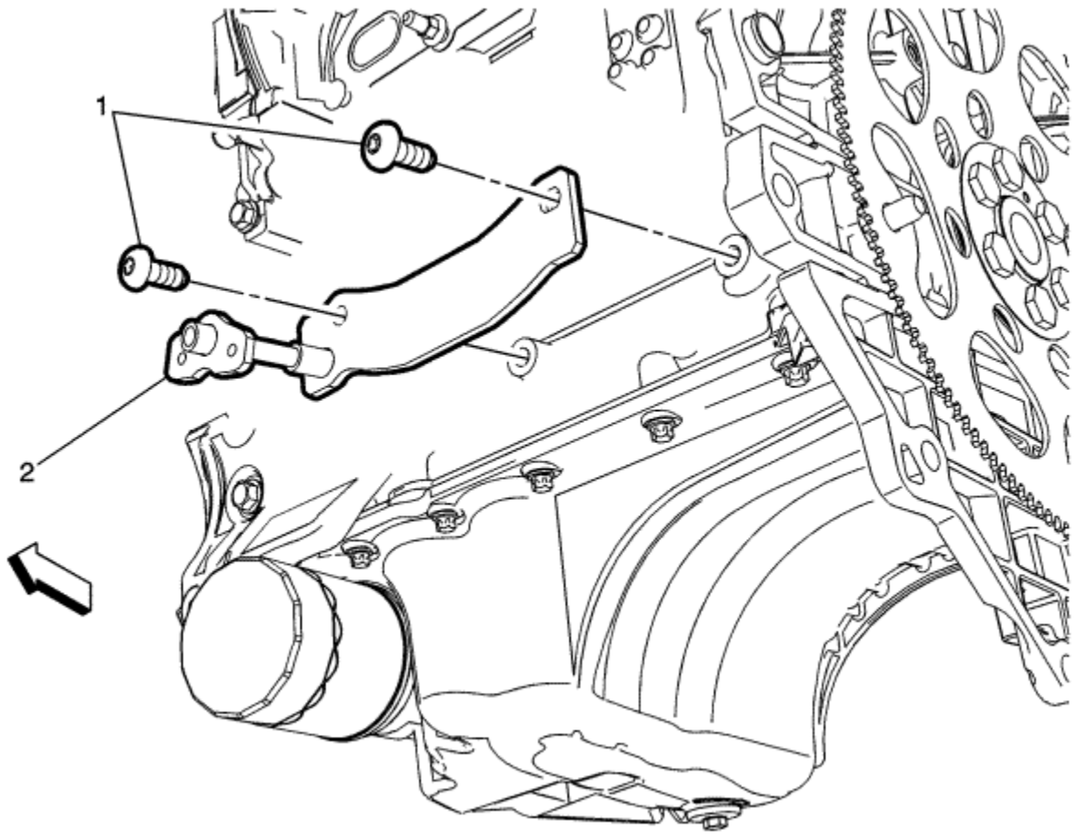

Callout	Component Name
Danger: Do not use a service jack in locations other than those specified to lift this vehicle. Lifting the vehicle with a jack in those other locations could cause the vehicle to slip off the jack and roll; this could cause injury or death. **Warning:** Refer to Hot Exhaust System Warning in the Preface section.	

Preliminary Procedures

1. Raise and support the vehicle. Refer to Lifting and Jacking the Vehicle .
2. Remove the exhaust manifold with catalytic converter. Refer to Exhaust Manifold with Catalytic Converter Replacement .

1	Catalytic Converter Brace Bolt (Qty: 2) **Caution:** Refer to Fastener Caution in the Preface section. **Tighten** 22 N·m (16 lb ft)
2	Catalytic Converter Brace

© Copyright Chevrolet. All rights reserved

Exhaust Resonator Replacement

Removal Procedure

Warning: Refer to Hot Exhaust System Warning in the Preface section.

Danger: Do not use a service jack in locations other than those specified to lift this vehicle. Lifting the vehicle with a jack in those other locations could cause the vehicle to slip off the jack and roll; this could cause injury or death.

1. Raise and support the vehicle. Refer to Lifting and Jacking the Vehicle .

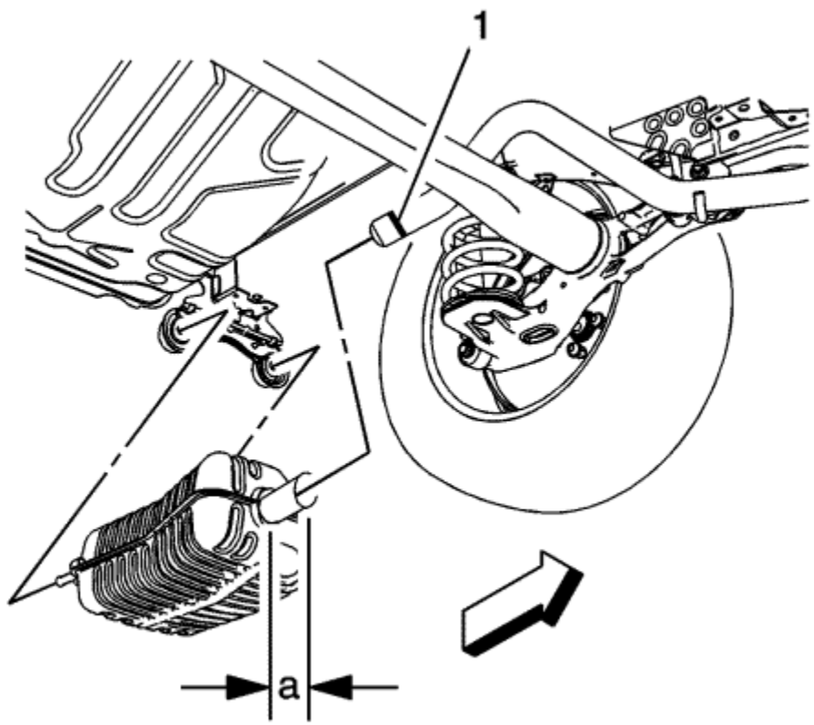

2. Make a cut on the exhaust resonator pipe (1), a distance of 60 mm, from the edge of the muffler flange (a).

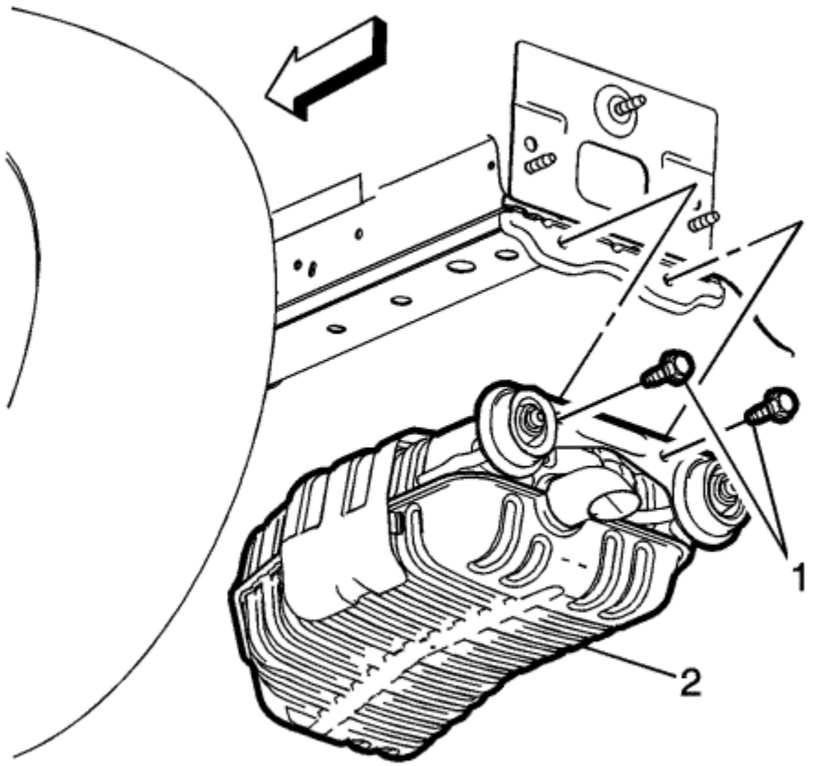

3. If replacing the rear muffler, remove the rear exhaust muffler bracket bolts (1) and lower to the floor.

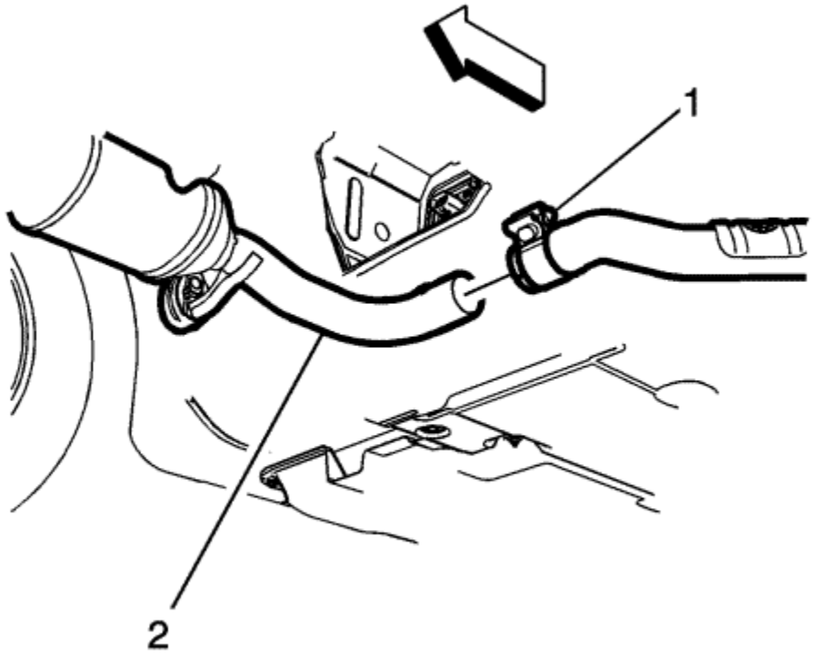

4. Loosen the exhaust muffler clamp (1), from the 3-way catalytic converter.

   Note: Replce exhaust muffler clamp with a NEW clamp.

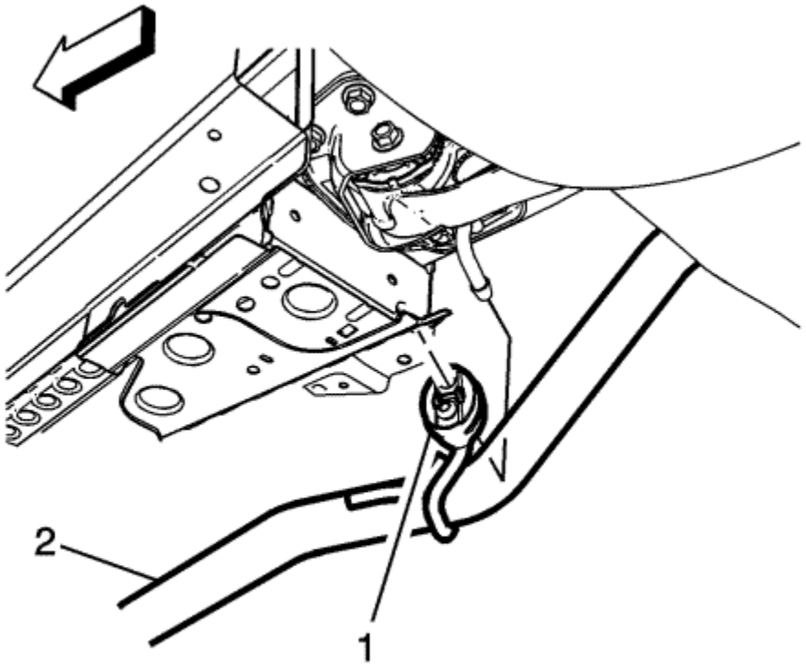

5. Remove the exhaust resonator pipe from the exhaust isolator (1).

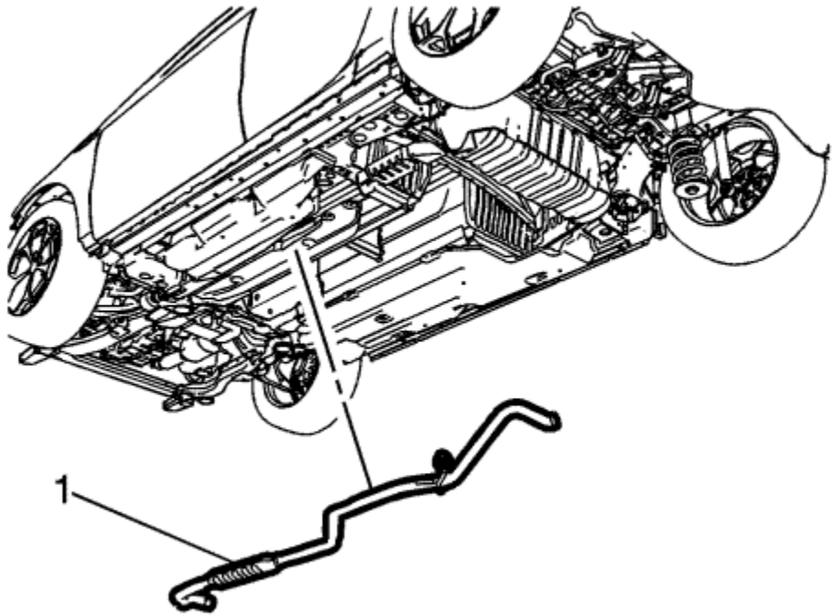

6. Carefully lower the exhaust resonator pipe (1) from the vehicle.

Installation Procedure

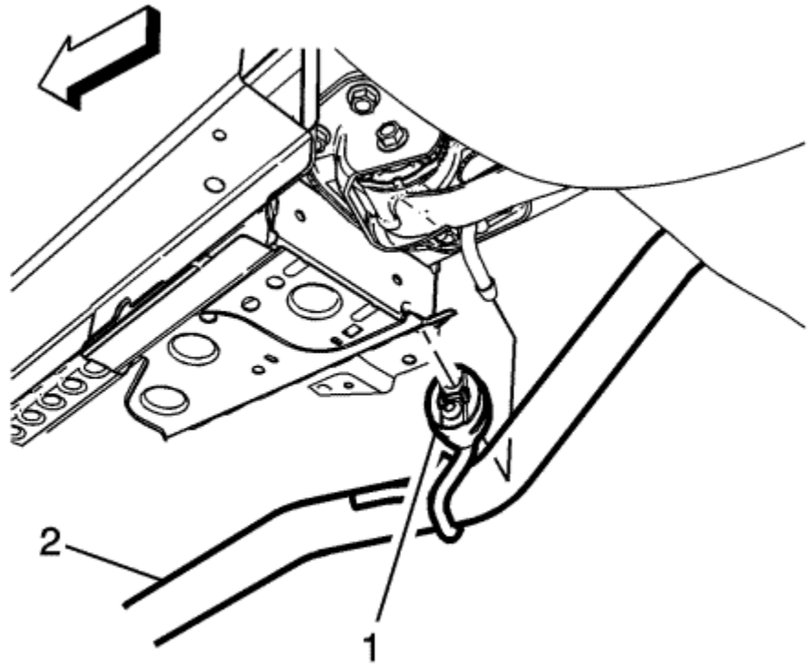

1. Install the exhaust resonator pipe onto the exhaust isolator (1).

   Caution: Refer to Fastener Caution in the Preface section.

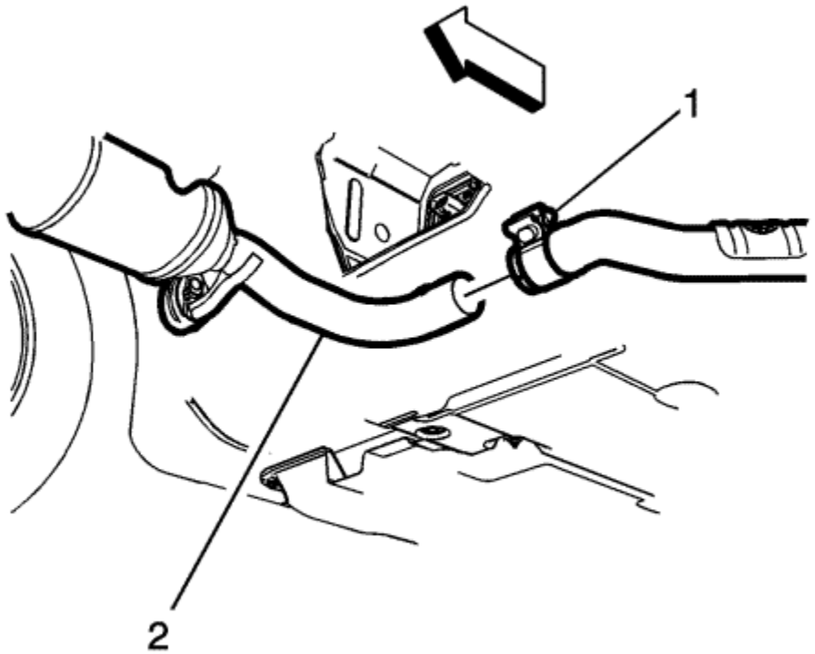

Note: Make sure the exhaust muffler clamp is fully seated into the slot on the catalytic converter before tightening the exhaust clamp nut.

2. Install the exhaust muffler resonator pipe into the 3-way converter (2) and tighten the clamp to **55 N·m (41 lb ft)**.

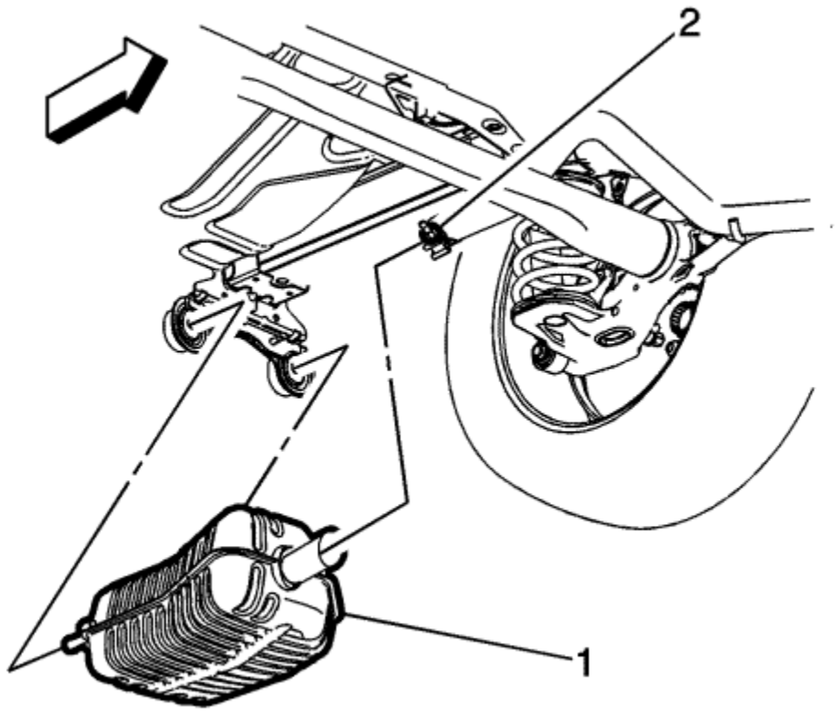

3. Install the rear exhaust muffler (1) to the rear pipe with a NEW service clamp and tighten the nut (2) to **55 N·m (41 lb ft)**.

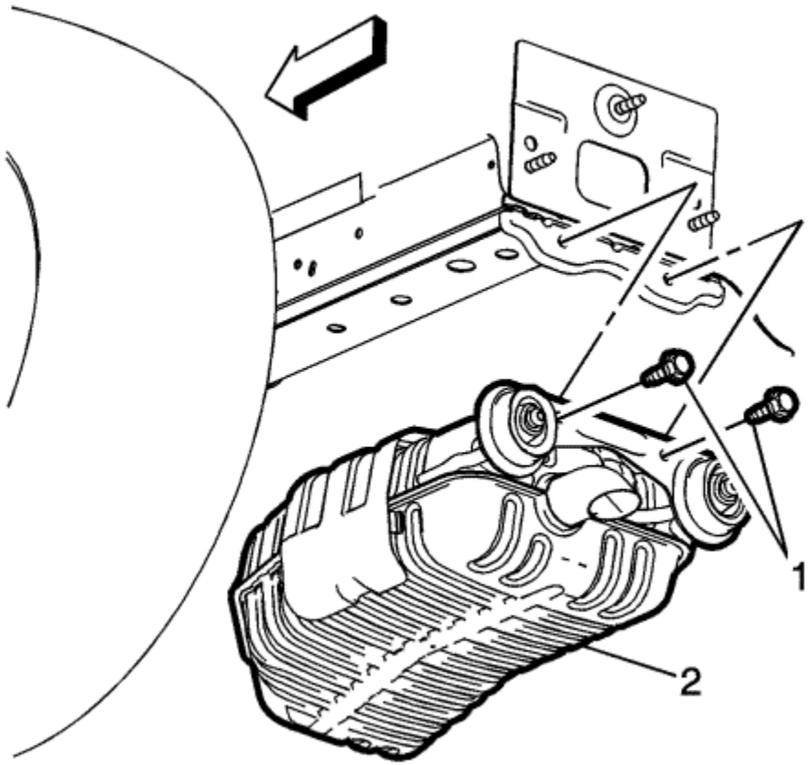

4. Install the rear exhaust muffler hanger bolts (1) and tighten to **22 N·m (16 lb ft)**.
5. Lower the vehicle.
6. Start the engine and check for exhaust leaks.

© Copyright Chevrolet. All rights reserved

Exhaust Pipe Heat Shield Replacement - Front

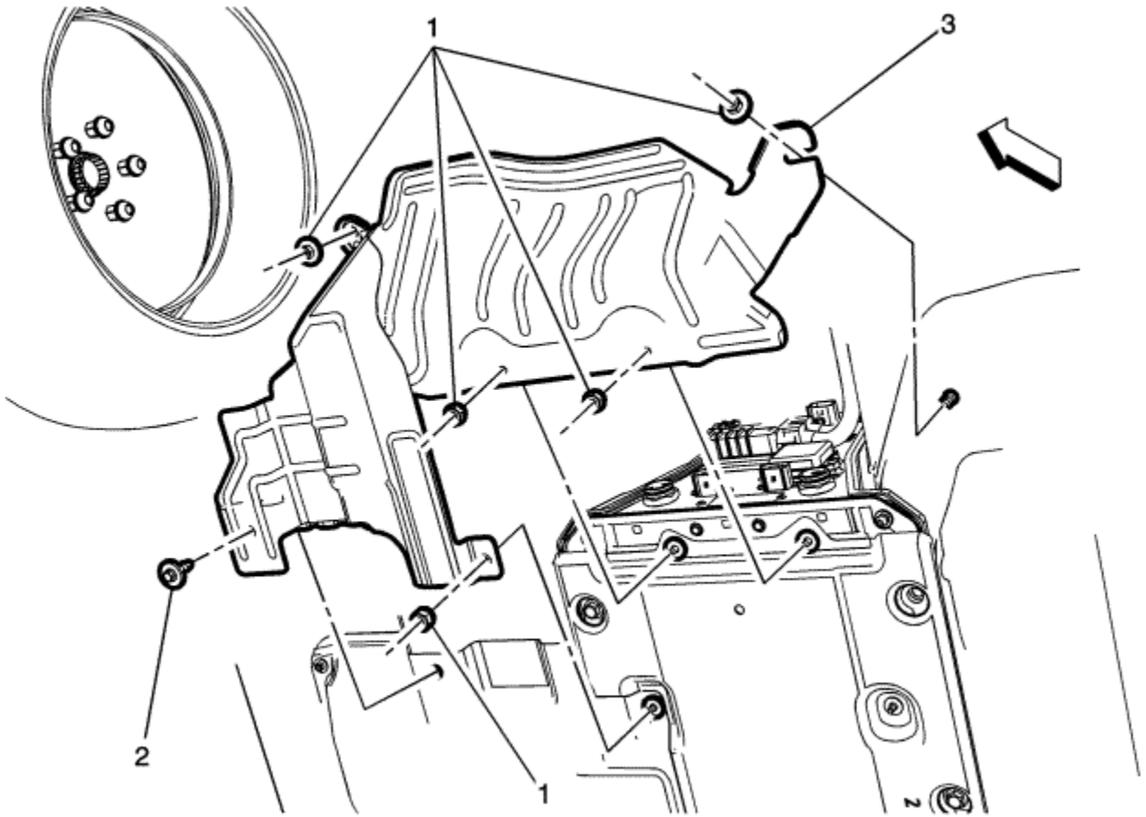

Callout	Component Name
Danger: Do not use a service jack in locations other than those specified to lift this vehicle. Lifting the vehicle with a jack in those other locations could cause the vehicle to slip off the jack and roll; this could cause injury or death. **Warning:** Refer to Hot Exhaust System Warning in the Preface section.	

Preliminary Procedure Raise and support the vehicle. Refer to Lifting and Jacking the Vehicle .	
1	Front Exhaust Pipe Heat Shield Nut (Qty: 5) **Caution:** Refer to Fastener Caution in the Preface section. **Tighten** 9 N·m (80 lb in)
2	Front Exhaust Pipe Heat Shield Screw **Tighten** 9 N·m (80 lb in)
3	Front Exhaust Pipe Heat Shield

© Copyright Chevrolet. All rights reserved

Exhaust Pipe Heat Shield Replacement - Centre

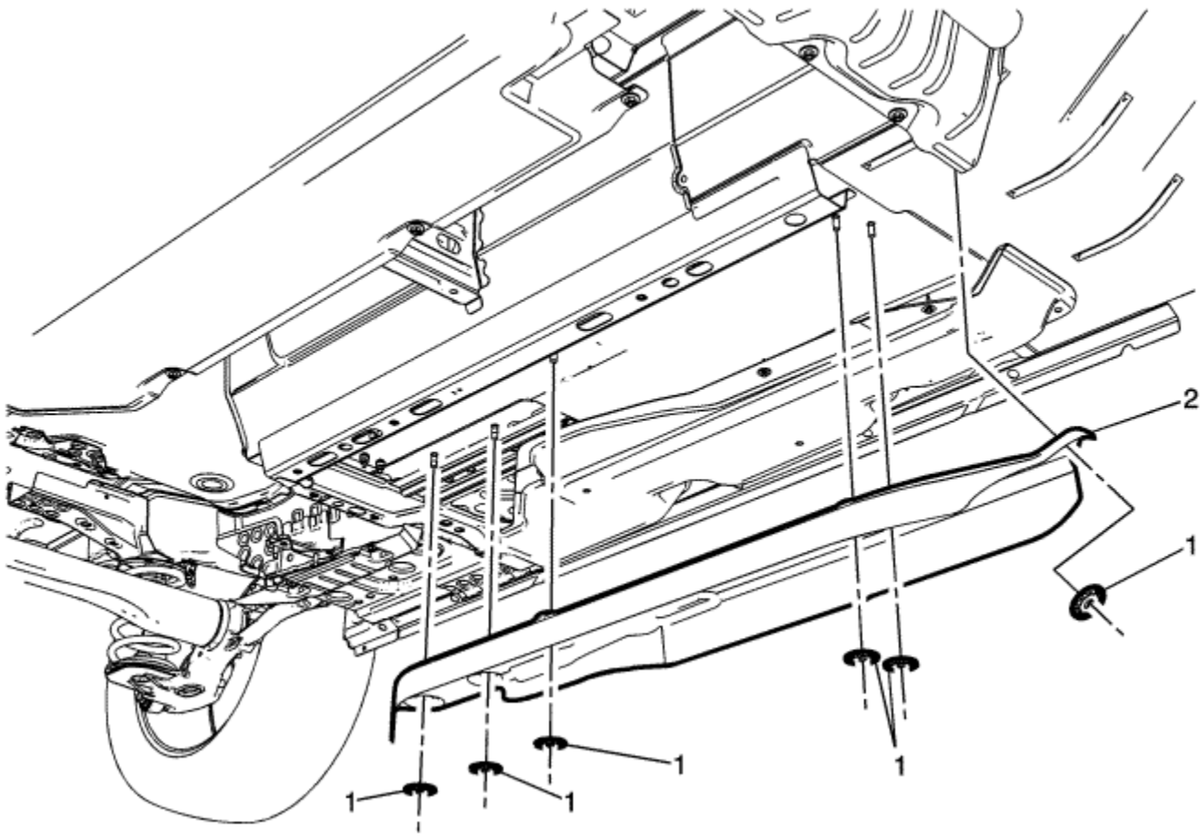

Callout	Component Name
Danger: Do not use a service jack in locations other than those specified to lift this vehicle. Lifting the vehicle with a jack in those other locations could cause the vehicle to slip off the jack and roll; this could cause injury or death. **Warning:** Refer to Hot Exhaust System Warning in the Preface section.	

Preliminary Procedures

1. Raise and support the vehicle. Refer to Lifting and Jacking the Vehicle .
2. Lower and reposition the exhaust muffler. Refer to Exhaust System Replacement .

1	Centre Exhaust Pipe Heat Shield Retainer (Qty: 6) **Caution:** Refer to Fastener Caution in the Preface section. **Tighten** 9 N·m (80 lb in)
2	Centre Exhaust Pipe Heat Shield

© Copyright Chevrolet. All rights reserved

Exhaust Pipe Heat Shield Replacement - Rear

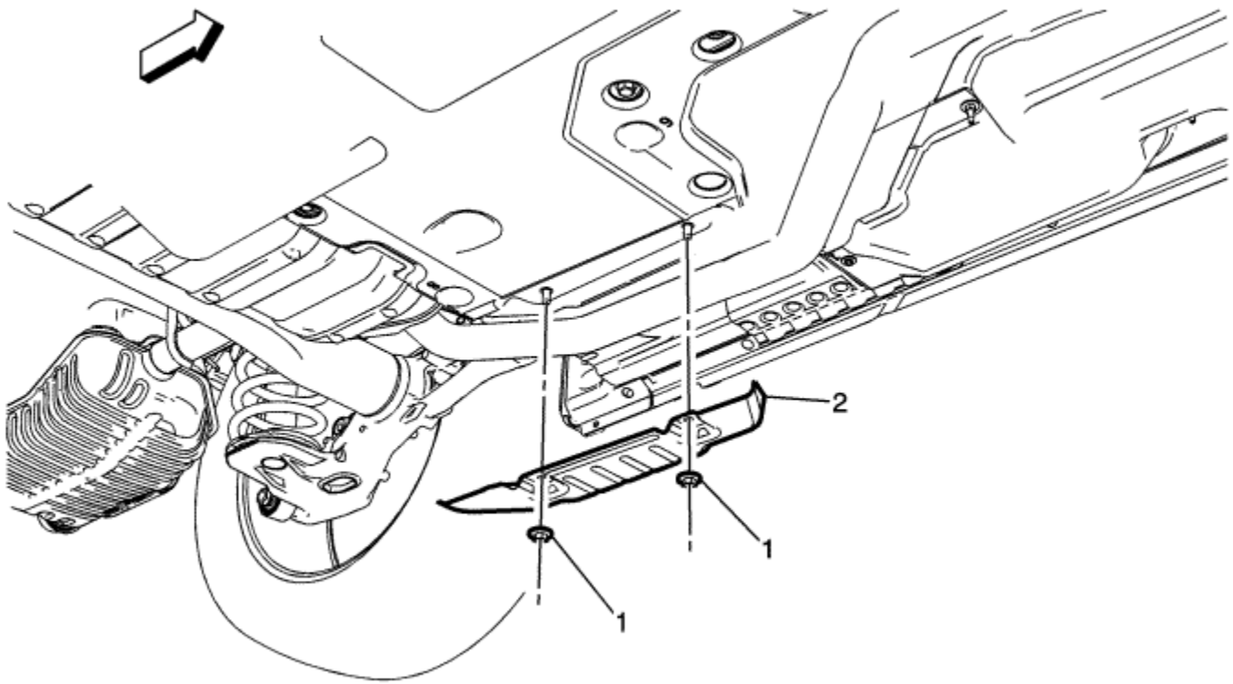

Callout	Component Name
Danger: Do not use a service jack in locations other than those specified to lift this vehicle. Lifting the vehicle with a jack in those other locations could cause the vehicle to slip off the jack and roll; this could cause injury or death. **Warning:** Refer to Hot Exhaust System Warning in the Preface section.	

Preliminary Procedure Raise and support the vehicle. Refer to Lifting and Jacking the Vehicle .	
1	Rear Exhaust Pipe Heat Shield Retainer (Qty: 2) **Caution:** Refer to Fastener Caution in the Preface section. **Tighten** 9 N·m (80 lb in)
2	Rear Exhaust Pipe Heat Shield

© Copyright Chevrolet. All rights reserved

Exhaust Rear Silencer Replacement

Removal Procedure

Warning: Refer to Hot Exhaust System Warning in the Preface section.

Danger: Do not use a service jack in locations other than those specified to lift this vehicle. Lifting the vehicle with a jack in those other locations could cause the vehicle to slip off the jack and roll; this could cause injury or death.

1. Raise and support the vehicle. Refer to Lifting and Jacking the Vehicle .

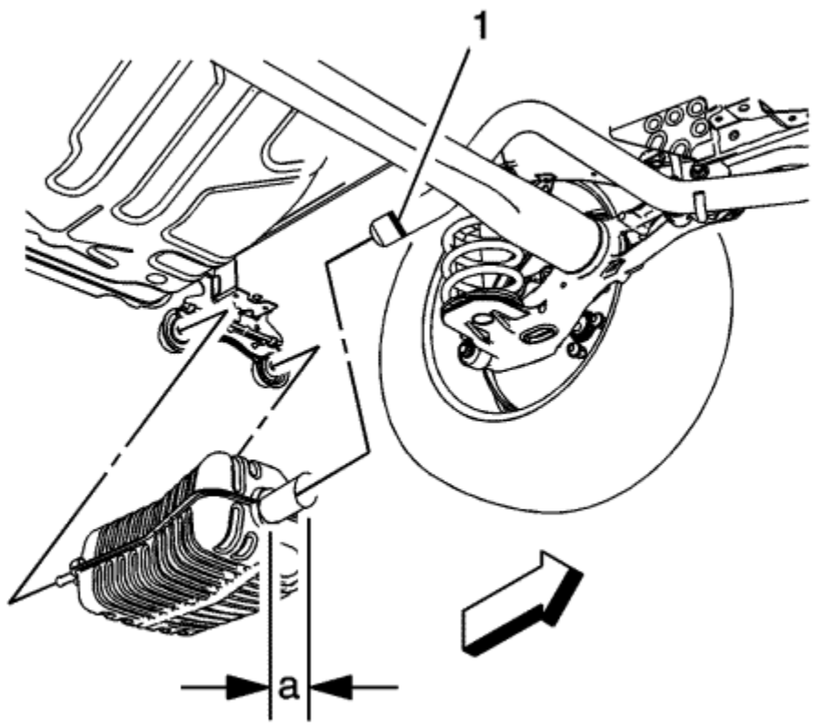

2. Measure the distance "a" between the muffler and the connection of the exhaust on the new replacement muffler.
3. Transfer the measurement "a" to the exhaust pipe (1).
4. Separate the muffler at the determined cut line with a suitable tool.
5. Remove the exhaust muffler hanger bracket.

Installation Procedure

Caution: Refer to Fastener Caution in the Preface section.

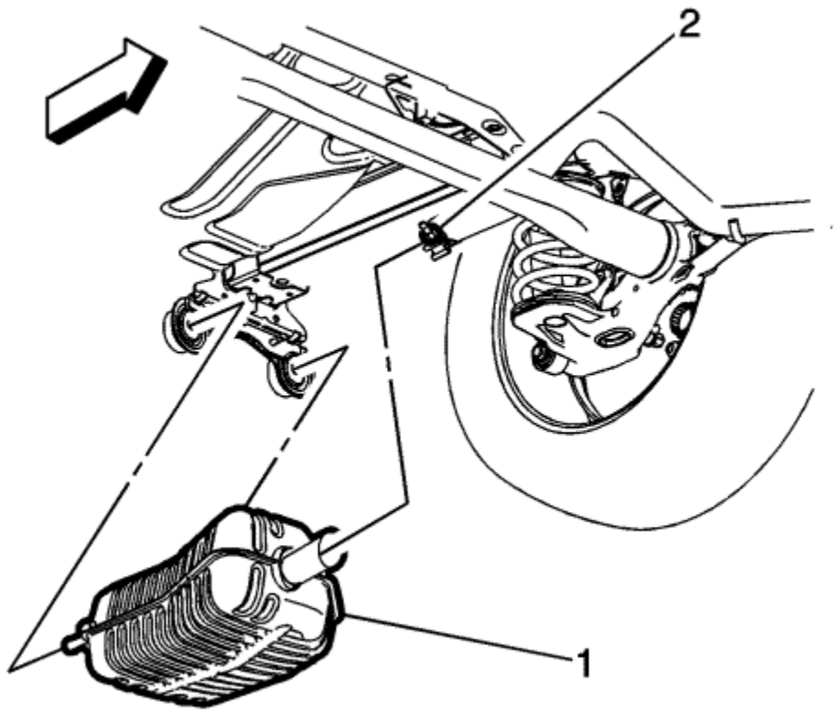

1. Install the rear exhaust muffler clamp onto the rear cut exhaust pipe.
2. Install the rear muffler exhaust hanger bracket and tighten the bolts to **22 N·m (16 lb ft)**.
3. Install the rear exhaust muffler (1) to the rear pipe and tighten the clamp nut (2) to **55 N·m (41 lb ft)**.
4. Lower the vehicle.
5. Start the engine and check for exhaust leaks.

© Copyright Chevrolet. All rights reserved

Exhaust System Description

Note: Use of non-OEM parts may cause driveability concerns.

The exhaust system carries exhaust gases, treated by the catalytic converter, through a resonator, if applicable and into the exhaust muffler where exhaust noise is lessened.

In order to secure the exhaust pipe to the exhaust manifold, a flange and seal-joint coupling is utilised. The exhaust system may utilise a slip-joint coupling design with a clamp and a U-bolt or a flange connection with a gasket.

Exhaust hangers and rubber insulators help to support the weight of the exhaust pipe along with insulating any exhaust system vibration, rattle, or noise.

Exhaust hangers also space the exhaust system away from the underbody of the vehicle and allows the exhaust system to expand as the exhaust system warms up.

Exhaust heat shields are used to protect the body and other components from damage due to the heat from the exhaust system.

The exhaust system may be comprised of the following components:

- Exhaust manifold with Catalytic Converter
- Exhaust pipes
- Catalytic converter
- Exhaust hangers
- Exhaust heat shields
- Exhaust isolators and rods
- Exhaust muffler
- Exhaust resonator, if equipped
- Exhaust tail pipe, if equipped

Resonator

Some exhaust systems are equipped with a resonator. The resonator, located either before or after the muffler, allows the use of mufflers with less back pressure. Resonators are used when vehicle characteristics require specific exhaust tuning.

Catalytic Converter

The catalytic converter is an emission control device added to the engine exhaust system in order to reduce hydrocarbons (HC), carbon monoxide (CO), and oxides of

nitrogen (NOx) pollutants from the exhaust gas.

The catalytic converter is comprised of a ceramic monolith substrate, supported in insulation and housed within a sheet metal shell. The substrate may be washcoated with 3 noble metals:

- Platinum (Pt)
- Palladium (Pd)
- Rhodium (Rh)

The catalyst in the converter is not serviceable.

Muffler

The exhaust muffler reduces the noise levels of the engine exhaust by the use of tuning tubes. The tuning tubes create channels inside the exhaust muffler that lower the sound levels created by the combustion of the engine.

&#169© Copyright Chevrolet. All rights reserved

Special Tools

Illustration	Tool Number/Description
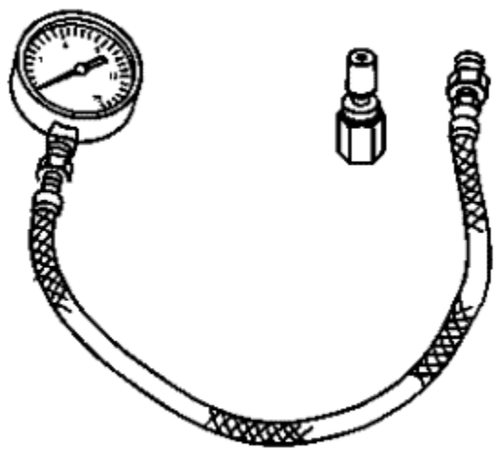	EN-35314-A J-35314-A Exhaust Back Pressure Gauge
	CH-6179 KM-6179 Heated Oxygen Sensor Remover/Installer

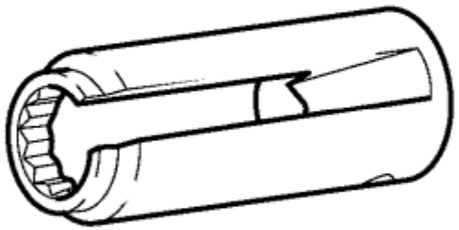	
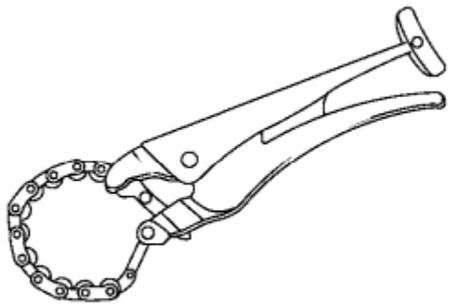	CH-6614 MKM-6614 83 95 667 Chain-type Pipe Cutter

© Copyright Chevrolet. All rights reserved

Fastener Tightening Specifications

Application	Specification	
	Metric	English
Air Conditioning Compressor Bracket Bolts	22 N·m	16 lb ft
Automatic Transmission Flex Plate Bolts	35 N·m + 30° + 15°	26 lb ft + 30° + 15°
Crankshaft Bearing Tie Plate Bolts (M6)	10 N·m + 60° + 15°	89 lb in + 60° + 15°
Crankshaft Bearing Tie Plate Bolts (M8)	25 N·m + 60° + 15°	18 lb ft + 60° + 15°
Camshaft Sprocket Bolt	50 N·m + 45° + 15°	37 lb ft + 45° + 15°
Camshaft Bearing Cap Bolts	8 N·m	71 lb in
Camshaft Cover Bolts	8 N·m	71 lb in
Camshaft Position Actuator Solenoid Valve	8 N·m	71 lb in
Camshaft Position Sensor Bolt	6 N·m	53 lb in
Catalytic Converter Bracket to Cylinder Block	22 N·m	16 lb ft
Catalytic Converter to Bracket	10 N·m	89 lb in
Big End Bearing Cap	25 N·m + 45°	18 lb ft + 45°
Crankshaft Position Sensor Bolt	8 N·m	71 lb in
Crankshaft Balancer Bolt	150 N·m + 60°	111 lb ft + 60°
Cylinder Head Bolts M9	35 N·m + 180°	26 lb ft + 180°
Engine Cooling Thermostat Housing Bolts	8 N·m	71 lb in
Engine Front Cover Bolts M10	35 N·m	26 lb ft
Engine Front Cover Bolts M6	8 N·m	71 lb in
Engine Mount Bracket Bolts	60N·m + 45-60°	44 lb ft + 45-60°
Engine Mount Right Side to Engine Mount Bracket	55 N·m	41 lb ft
Engine Mount to Body Fastener Nut	50 N·m	37 lb ft
Engine Mount to Body Fastener Bolts	58 N·m	43 lb ft
Exhaust Manifold to Cylinder Head	22 N·m	16 lb ft
Fuel Injection Rail to Intake Manifold	7 N·m	62 lb in
Ignition Coil Bolts	8 N·m	71 lb in

Inlet Manifold Bolt	20 N·m	15 lb ft
Knock Sensor	20 N·m	15 lb ft
Oil Filter	20 N·m	15 lb ft
Sump Bolt	10 N·m	89 lb in
Sump Drain Plug	14 N·m	124 lb in
Oil Pressure Indicator	20 N·m	15 lb ft
Oil Pressure Relief Valve	50 N·m	37 lb ft
Oil Pump Cover Bolts	8 N·m	71 lb in
Oxygen Sensor to Exhaust Manifold	42 N·m	31 lb ft
Spark Plugs	25 N·m	18 lb ft
Starter Cover Bolts	20 N·m	15 lb ft
Throttle Body Bolts	9 N·m	80 lb in
Timing Chain Guide	8 N·m	71 lb in
Timing Chain Tensioner	8 N·m	71 lb in
Timing Chain Tensioner Shoe	20 N·m	15 lb ft
Torque Dampener to Flex Plate	62 N·m	46 lb ft
Transmission to Engine Bolts	80 N·m	59 lb ft
Water Outlet	8 N·m	71 lb in
Water Pump Housing Bolts	8 N·m	71 lb in
Water Pump Drain Plug	15 N·m	11 lb ft
Water Pump Pulley Bolts	10 N·m	89 lb in

© Copyright Chevrolet. All rights reserved

Engine Mechanical Specifications

Application	Specification	
	Metric	English
General Data		
Engine Type	4-Cylinder Inline	
Displacement	1398 ccm	85 cu in
Bore	73.4 mm	2.9 in
Stroke	82.6 mm	3.3 in
Compression Ratio	10.5 : 1	
Number of Valves	16	
Maximum Power @ engine speed kW/RPM	55 KW / 4200	
Maximum Torque @ engine speed Nm/RPM / lbf ft/RPM	123 Nm / 4000	91 lbf ft / 4000
Engine Block, Crankshaft, Pistons, and Connecting Rods		
Cylinder Bore Diameter Standard	73.392 mm - 73.408 mm	2.8894 in - 2.8901 in
Cylinder Bore Diameter Oversize 0.5	73.892 mm - 73.908 mm	2.9091 in - 2.9098 in
Piston Diameter Standard	73.353 mm - 73.367 mm	2.8879 in - 2.8885 in
Piston Diameter Oversize 0.5	73.853 mm - 73.867 mm	2.9076 in - 2.9081 in
Piston Clearance to Bore	0.025 mm -0.055 mm	0.001 in - 0.0022 in
Piston - Upper Compression Ring Thickness	1.17 mm - 1.195 mm	0.0461 in 0.0470 in

Piston - Upper Compression Ring Gap	0.25 mm - 0.4 mm	0.0098 in - 0.0157 in
Piston - Upper Compression Ring Side Clearance	0.025 mm - 0.07 mm	0.001 in - 0.0028 in
Piston - Lower Compression Ring Thickness	1.17 mm - 1.195 mm	0.0461 in 0.0470 in
Piston - Lower Compression Ring Gap	0.4 mm - 0.6 mm	0.0157 in - 0.0236 in
Piston - Lower Compression Ring Side Clearance	0.025 mm - 0.07 mm	0.001 in - 0.0028 in
Piston - Oil Ring Thickness	1.92 mm - 2 mm	0.0756 in - 0.0787 in
Piston - Oil Ring Gap	0.25 mm - 0.75 mm	0.0098 in - 0.0295 in
Piston - Oil Ring Side Clearance	0.04 mm - 0.12 mm	0.0016 in - 0.0047 in
Gudgeon Pin Bore Diameter	18.006 mm - 18.012 mm	0.7089 in - 0.7091 in
Gudgeon Pin Outer Diameter	17.995 mm - 18 mm	0.7085 in - 0.7087 in
Gudgeon Pin Length	52.7 mm - 53 mm	2.0748 in - 2.0866 in
Gudgeon Pin Clearance to Piston Bore	0.006 mm - 0.017 mm	0.0002 in - 0.0007 in
Gudgeon Pin Clearance to Conrod Bore	Shrinked in Conrod	
Crankshaft Balancer Clearance to Engine Front Cover	4.5 mm	0.1772 in
Crankshaft Bearing Journal Standard Diameter (brown or green)	50.004 mm - 50.017 mm	1.9687 in - 1.9692 in
Crankshaft Bearing Journal Undersize 0.25 Diameter (brown/blue or green/blue)	49.754 mm - 49.767 mm	1.9588 in - 1.9593 in
Crankshaft Bearing Journal Undersize 0.5 Diameter (brown/white or green/white)	49.504 mm - 49.517 mm	1.949 in - 1.9495 in
Crankshaft Bearing Journal Width Standard	23.000 mm - 23.052 mm	0.9055 in - 0.9076 in
Crankshaft Bearing Journal Width Undersize 0.25	23.200 mm -23.252 mm	0.9134 in - 0.9154 in
Crankshaft Bearing Journal Width Undersize 0.4	23.400 mm - 23.452 mm	0.9213 in - 0.9233 in

Crankshaft Bearing Mark 328N (brown) - Thickness	1.989 mm -1.995 mm	0.0783 in - 0.0785 in
Crankshaft Bearing Mark 329N (green) - Thickness	1.995 mm - 2.001 mm	0.0785 in - 0.0788 in
Crankshaft Bearing Mark 330N - Thickness Undersize 0.25 (brown/blue)	2.114 mm - 2.120 mm	0.0832 in - 0.0835 in
Crankshaft Bearing Mark 331 - Thickness Undersize 0.25 (green/blue)	2.120 mm - 2.126 mm	0.0835 in - 0.0837 in
Crankshaft Bearing Mark 332 - Thickness Undersize 0.5 (brown/white)	2.239 mm - 2.245 mm	0.0881 in - 0.0884 in
Crankshaft Bearing Mark 332 - Thickness Undersize 0.5 (green/white)	2.245 mm - 2.251 mm	0.0884 in - 0.0886 in
Crankshaft Bearing Clearance	0.007 mm - 0.031 mm	0.0003 in - 0.0012 in
Crankshaft Bearing Clearance Axial	0.100 mm - 0.202 mm	0.0039 in - 0.008 in
Crankshaft Bearing Out Of Round	0.03 mm	0.0012 in
Conrod Bearing Journal Diameter Standard	42.971 mm - 42.987 mm	1.6918 in - 1.6924 in
Conrod Bearing Journal Diameter Undersize 0.25 (blue)	42.721 mm - 42.737 mm	1.6819 in - 1.6826 in
Conrod Bearing Journal Diameter Undersize 0.5 (white)	42.471 mm - 42.487 mm	1.6721 in - 1.6727 in
Conrod Bearing Thickness Standard	1.490 mm - 1.500 mm	0.0587 in - 0.0591 in
Conrod Bearing Thickness Undersize 0.25	1.615 mm - 1.625 mm	0.0636 in - 0.064 in
Conrod Bearing Thickness Undersize 0.5	1.740 mm - 1.750 mm	0.0685 in - 0.0689 in
Conrod Bearing Diameter Standard (upper and lower)	1.490 mm - 1.500 mm	0.0587 in - 0.0591 in
Conrod Bearing Diameter Undersize 0.25 (upper and lower)	1.615 mm - 1.625 mm	0.0636 in - 0.064 in
Conrod Bearing Diameter Undersize 0.5 (upper and lower)	1.740 mm - 1.750 mm	0.0685 in - 0.0689 in
Conrod Bearing Clearance	0.013 mm - 0.061 mm	0.0005 in - 0.0024 in
Cylinder Head And Valve Train		
Cylinder Head - Intake Valve Seat Width		

	1.4 mm - 1.8 mm	0.0551 in - 0.0709 in
Cylinder Head - Exhaust Valve Seat Width	1 mm - 1.4 mm	0.0394 in - 0.0551 in
Cylinder Head - Valve Seat Angle Standard	90° 30'	
Cylinder Head - Valve Seat Angle Oversize	110°	
Cylinder Head - Intake Valve Guide Inner Diameter Standard	4.991 mm - 5.007 mm	0.1965 in - 0.1971 in
Cylinder Head - Intake Valve Guide Inner Diameter + 0.075	5.066 mm - 5.082 mm	0.1994 in - 0.2001 in
Cylinder Head - Intake Valve Guide Inner Diameter 0.150	5.141 mm - 5.157 mm	0.2024 in - 0.203 in
Cylinder Head - Exhaust Valve Guide Inner Diameter Standard	4.991 mm - 5.007 mm	0.1965 in - 0.1971 in
Cylinder Head - Exhaust Valve Guide Inner Diameter + 0.075	5.066 mm - 5.082 mm	0.1994 in - 0.2001 in
Cylinder Head - Exhaust Valve Guide Inner Diameter + 0.150	5.141 mm - 5.157 mm	0.2024 in - 0.203 in
Cylinder Head - Valve Guide Length	38.7 mm - 39.3 mm	1.5236 in - 1.5472 in
Intake Valve Length Standard	92.9 mm	3.6575 in
Exhaust Valve Length Standard	92.7 mm	3.6496 in
Intake Valve Stem Diameter Standard	4.950 mm - 4.965 mm	0.1949 in - 0.1955 in
Exhaust Valve Stem Diameter Standard	4.930 mm - 4.945 mm	0.1941 in - 0.1947 in
Intake Valve Stem Diameter + 0.075	5.025 mm - 5.040 mm	0.1978 in - 0.1984 in
Exhaust Valve Stem Diameter + 0.075	5.005 mm - 5.020 mm	0.197 in - 0.1976 in
Intake Valve Stem Diameter + 0.150	5.100 mm - 5.115 mm	0.2008 in - 0.2014 in
Exhaust Valve Stem Diameter + 0.150	5.080 mm - 5.095 mm	0.2000 in - 0.2006 in
Intake Valve Disc Diameter	27.9 mm - 28.1 mm	1.0984 in - 1.1063 in

Exhaust Valve Disc Diameter	24.9 mm - 25.1	0.9803 in -- 0.9882 in
Valve Spring Height Free	40 mm	1.5748 in
Valve Spring Height Under Load - Valve open	21.5 mm	0.8465 in
Valve Spring Height Under Load -Valve closed	30 mm	1.1811 in
Valve Clearance to Guide Intake	0.026 mm - 0.057 mm	0.001 in - 0.0022 in
Valve Clearance to Guide Exhaust	0.046 mm - 0.077 mm	0.0018 in - 0.0030 in
Engine Oil		
Quality	Dexos II	
Filling - With New Oil Filter	3.5 L	3.7 Quarts
Viscosity	5W30 GF-4	
Oil Pressure @ Idle Speed	150 kpa	22 psi
Oil Pressure @ 3000 rpm - 3500 rpm	380 kpa - 650 kpa	55 psi - 94 psi
Oil Pump		
Axial Clearance Vane Rotor to Cover	0.01 mm	0.0004 in
Axial Clearance Vane to Cover	0.09 mm	0.0036 in
Axial Clearance Vane Ring to Cover	0.04 mm	0.0016 in
Axial Clearance Slide to Cover	0.08 mm	0.0031 in
Axial Clearance Slide Seal to Cover	0.09 mm	0.0036 in
Radial Clearance Vane to Vane Rotor	0.05 mm	0.002 in
Oil Pump Slide Spring Length	76.5 mm	3.0118 in
Radial Clearance Vane to Slide	0.2 mm	0.008 in

© Copyright Chevrolet. All rights reserved

Adhesives, Fluids, Lubricants, and Sealers

Application	Type of Material	GM Part Number	
		United States	Canada
Bolt Connections	Screw Locking Compound	12345382	10953489
Camshaft Bearings	Dexos1 Engine Oil	19293000	19286321
Camshaft Front Oil Seal	Sealant	1052943	10953491
Camshafts	Dexos1 Engine Oil	19293000	19286321
Crankshaft Bearing Lubricant	Dexos1 Engine Oil	19293000	19286321
Engine Block Oil Gallery Plugs	Sealant	1052943	10953491
Engine Oil	Dexos1 Engine Oil	19293000	19286321
Inlet and Exhaust Valves	Dexos1 Engine Oil	19293000	19286321
Sump	Sealant	12378521	88901148
Oxygen Sensor	Assembly Paste - White	88862477	88862478
Oxygen Sensor Threads	Anti-seize	12397953	NA
Rear Crankshaft Main Bearing Cap	Sealant	12378521	88901148
Rear Crankshaft Oil Seal	Dexos1 Engine Oil	19293000	19286321
Rod Bearing - Rod Pins of Crankshaft	Dexos1 Engine Oil	19293000	19286321
Seal Rings	Silicone Grease - White	12345579	10953481
Turbo Heat Shield Fastener	Lubricant	12345996	10953501
Water Pump Bearing	Sealant	1052943	10953491

© Copyright Chevrolet. All rights reserved

Disassembled Views

Figure 1: Accessory Drive Components
Figure 2: Engine Front Cover and Oil Pump Assembly (1 of 2)
Figure 3: Engine Front Cover and Oil Pump Assembly (2 of 2)
Figure 4: Timing Chain Components
Figure 5: Inlet Manifold Assembly
Figure 6: Cylinder Head Assembly
Figure 7: Engine Block Assembly

© Copyright Chevrolet. All rights reserved

Engine Identification

Engine Number

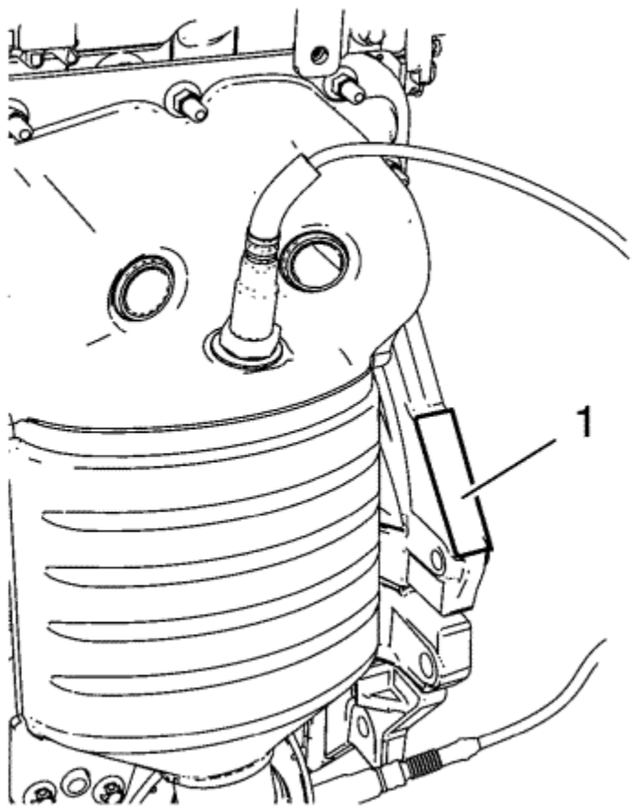

Note: The engine identification number must be stamped to the cylinder block in case of engine replacement.

The engine number is stamped to the engine block (1).

© Copyright Chevrolet. All rights reserved

Symptoms - Engine Mechanical

Strategy Based Diagnostics

All diagnosis on a vehicle should follow a logical process. Strategy based diagnostics is a uniform approach for repairing all systems. The diagnostic flow may always be used in order to resolve a system condition. The diagnostic flow is the place to start when repairs are necessary.

Visual/Physical Inspection

- Inspect for aftermarket devices which could affect the operation of the engine.
- Inspect the easily accessible or visible system components for obvious damage or conditions which could cause the symptom.
- Inspect for the correct oil level, proper oil viscosity, and correct filter application.
- Verify the exact operating conditions under which the concern exists. Note factors such as engine RPM, ambient temperature, engine temperature, amount of engine warm-up time, and other specifics.
- Compare the engine sounds, if applicable, to a known good engine and make sure you are not trying to correct a normal condition.

Intermittent

Test the vehicle under the same conditions that the customer reported in order to verify the system is operating properly.

Symptom List

Refer to a symptom diagnostic procedure from the following list in order to diagnose the symptom:

- Base Engine Misfire without Internal Engine Noises
- Base Engine Misfire with Abnormal Internal Lower Engine Noises
- Base Engine Misfire with Abnormal Valve Train Noise
- Base Engine Misfire with Coolant Consumption
- Base Engine Misfire with Excessive Oil Consumption
- Engine Noise on Start-Up, but Only Lasting a Few Seconds
- Upper Engine Noise, Regardless of Engine Speed
- Lower Engine Noise, Regardless of Engine Speed
- Engine Noise Under Load

- Engine Will Not Crank - Crankshaft Will Not Rotate
- Engine Compression Test
- Oil Consumption Diagnosis
- Oil Pressure Diagnosis and Testing
- Drive Belt Chirping, Squeal, and Whine Diagnosis
- Drive Belt Rumbling and Vibration Diagnosis
- Drive Belt Falls Off and Excessive Wear Diagnosis

&#169© Copyright Chevrolet. All rights reserved

Oil Consumption Diagnosis

Checks	Causes
The causes of excessive oil consumption may include the following conditions:	
Preliminary	• External oil leaks. • Incorrect oil level or improper reading of the oil level indicator. With the vehicle on a level surface, run the engine for a few minutes, allow adequate drain down time (2-3 minutes) and check for the correct engine oil level. • Improper oil viscosity. Refer to the vehicle owners manual and use the recommended SAE grade and viscosity for the prevailing temperatures. • Continuous high speed driving and/or severe usage. • Crankcase ventilation system restrictions or malfunctioning components. • Worn valve guides and/or valve stems. • Worn, missing or improperly installed valve stem oil seals. • Piston rings broken, worn, not seated properly. Allow adequate time for the rings to seat. Replace worn piston rings as necessary. • Piston and rings improperly installed or miss-fitted to the cylinder bore.

&#169© Copyright Chevrolet. All rights reserved

Engine Noise Under Load

Cause	Correction
Low oil pressure	Insufficient or poor oil supply to components. 1. Perform oil pressure test. 2. Repair or replace all damaged components.
Loose torque converter bolts	1. Inspect the torque converter bolts and flywheel. 2. Repair or replace all damaged components.
Loose and/or damaged flywheel	1. Inspect the flywheel and flywheel attaching bolts. 2. Repair or replace all damaged components.
Excessive piston-to-cylinder bore clearance	1. Inspect the piston rings for low ring tension, broken or worn rings, inspect cylinder bore. 2. Repair or replace all damaged components.
Excessive crankshaft thrust bearing clearance	1. Inspect the crankshaft end play and crankshaft thrust bearings. 2. Repair or replace all damaged components.
Excessive crankshaft bearing clearance	1. Inspect the crankshaft bearings and crankshaft journals. 2. Repair or replace all damaged components.

© Copyright Chevrolet. All rights reserved

Engine Noise on Start-Up, but Only Lasting a Few Seconds

Cause	Correction
Incorrect oil filter without anti-drainback feature	Install the correct oil filter.
Incorrect oil viscosity	Drain the engine oil and replace with the correct viscosity oil.
High stationary hydraulic lash adjuster (SHLA), tappet, leak down rate	Replace the SHLAs, tappets, as required.
Worn crankshaft thrust bearing	• Inspect the thrust bearing and crankshaft. • Repair or replace as required.
Damaged or faulty oil filter by-pass valve	• Inspect the oil filter by-pass valve for proper operation. • Repair or replace as required.

&#169© Copyright Chevrolet. All rights reserved

Base Engine Misfire without Internal Engine Noises

Condition	Action
Abnormalities (severe cracking, bumps, or missing areas) in the accessory drive belt. Also worn, damaged, or misaligned accessory drive components or excessive pulley runout.	Abnormalities in the accessory drive belt and/or components may cause engine RPM variations, noises similar to a faulty lower engine and also lead to a misfire condition. A misfire code may be present without an actual misfire condition. 1. Inspect the accessory drive components. 2. Repair or replace all damaged components.
Loose and/or damaged crankshaft pulley	A misfire code may be present without an actual misfire condition. 1. Inspect crankshaft pulley and pulley bolt. 2. Repair or replace all damaged components.
Loose torque converter bolts	A misfire code may be present without an actual misfire condition. 1. Inspect torque converter bolts and flywheel. 2. Repair or replace all damaged components.
Loose and/or damaged flywheel	A misfire code may be present without an actual misfire condition. 1. Inspect flywheel and flywheel attaching bolts. 2. Repair or replace all damaged components.
Restricted exhaust system	A severe restriction in the exhaust flow can cause significant loss of engine performance and may set a misfire code. Possible causes of restrictions include collapsed or dented pipes, plugged silencers and/or catalytic converters. Repair or replace all damaged components.
Air in fuel system	1. Inspect fuel filter, fuel system for leaks and/or restrictions. 2. Repair or replace all damaged components.
Bent and/or worn valve bridge and finger-follower	1. Inspect valve bridge and valve finger-follower. 2. Repair or replace all damaged components.
	Carbon on the valve stem or valve seat may cause the valve to stick.

Sticking valve	1. Inspect valves and valve guides. 2. Repair or replace all damaged components.
Damaged or misaligned timing gears	1. Inspect timing gears. 2. Replace all damaged components.
Worn or faulty camshaft lobes	1. Inspect camshaft lobes. 2. Repair or replace all damaged components.
Excessive piston-to-cylinder bore clearance	1. Perform compression tests. 2. Inspect the piston, piston rings and cylinder bore. 3. Repair or replace all damaged components.
Faulty cylinder head gaskets and/or cracking or other damage to the cylinder heads and engine block cooling system passages. (Coolant consumption may or may not cause the engine to overheat.)	1. Perform compression tests. 2. Inspect the piston, piston rings and cylinder bore. 3. Repair or replace all damaged components.

© Copyright Chevrolet. All rights reserved

Base Engine Misfire with Abnormal Internal Lower Engine Noises

Condition	Actions
Abnormalities (server cracking, bumps or missing areas) in the accessory drive belt	Abnormalities in the accessory drive belt and/or components may cause engine RPM variations, noises similar to faulty lower engine and also lead to a misfire condition. A misfire code may be present without an actual misfire condition. 1. Inspect the accessory drive components. 2. Repair or replace all damaged components.
Worn, damaged, or misaligned accessory drive components or excessive pulley runout	A misfire code may be present without an actual misfire condition. 1. Inspect the accessory drive components. 2. Repair or replace all damage components.
Loose and/or damaged crankshaft pulley	A misfire code may be present without an actual misfire condition. 1. Repair or replace all damaged components. 2. Inspect crankshaft pulley and pulley bolt.
Loose torque converter bolts	A misfire code may be present without an actual misfire condition. 1. Inspect torque converter bolts and flywheel. 2. Repair or replace all damaged components.
Loose and/or damaged flywheel	A misfire code may be present without an actual misfire condition. 1. Inspect flywheel and flywheel attaching bolts. 2. Repair or replace all damaged components.
Excessive piston-to-cylinder bore clearance	1. Perform cylinder leak down and compression tests. 2. Inspect the piston, piston rings and cylinder bore. 3. Repair or replace all damaged components.
	Severely worn thrust surfaces on the crankshaft and/or thrust bearing may permit for and aft movement of the crankshaft and create a misfire code without an actual misfire condition.

Excessive crankshaft thrust bearing clearance	1. Inspect the crankshaft end play and crankshaft thrust bearings. 2. Repair or replace all damaged.

© Copyright Chevrolet. All rights reserved

Base Engine Misfire with Abnormal Valve Train Noise

Condition	Action
Loose, worn or damaged valve bridge and finger-follower	1. Inspect valve bridge and finger-follower. 2. Repair or replace all damaged components.
Broken valve springs	1. Inspect valve springs. 2. Repair or replace all damaged components.
Sticking valve	Carbon on the valve stem or valve seat may cause the valve to stick. 1. Inspect valves and valve guides. 2. Repair or replace all damaged components.
Worn or faulty camshaft lobes	1. Inspect camshaft lobes. 2. Repair or replace all damaged components.

© Copyright Chevrolet. All rights reserved

Base Engine Misfire with Coolant Consumption

Inspection	Action
DEFINITION: Base engine misfire with coolant consumption	
Preliminary Inspection	Verify that there are no external coolant leaks.
Isolate Affected Cylinders	• Cylinder balance test with scan tool • Cooling system pressurisation • Inspection of glow plugs • Compression test
EGR System Inspection	• Inspect EGR valve and inlet system for evidence of coolant leakage. • Replace the EGR cooler if any problem is found.
Cylinder Head Gasket Leakage	• Remove cylinder heads of the affected cylinder bank and inspect for damage. • Replace components as necessary.
Cylinder Head or Engine Block Damage	• Inspect the cylinder head for cracks. • Inspect the cylinder block for damage. • Inspect the cylinder block to head mating surface for straightness. • Replace components as necessary.

&#169© Copyright Chevrolet. All rights reserved

Base Engine Misfire with Excessive Oil Consumption

Condition	Action
Worn valve guides	1. Inspect the valves and valve guides. 2. Repair or replace all damaged components.
Worn valve stem oil seals	1. Inspect the valve stem oil seals. 2. Repair or replace all damaged components.
Excessive piston-to-cylinder bore clearance	1. Perform compression tests to determine the cause. 2. Inspect the piston rings for low ring tension, broken or worn rings. 3. Inspect cylinder bore. 4. Repair or replace all damaged components.

© Copyright Chevrolet. All rights reserved

Upper Engine Noise, Regardless of Engine Speed

Condition	Action
Low oil pressure	Insufficient or poor oil supply to valve train. 1. Perform oil pressure test. 2. Repair or replace all damaged components.
Improper lubrication to the valve finger-follower	1. Inspect valve finger-follower, valve bridge, valve finger follower lifter, oil pump and engine block oil galleries. 2. Repair or replace all damaged components.
Worn or damaged valve finger-follower	1. Inspect valve bridge and finger-follower. 2. Repair or replace all damaged components.
Sticking valve	Carbon on the valve stem or valve seat may cause the valve to stick. 1. Inspect valves and valve guides. 2. Repair or replace all damaged components.
Worn or faulty camshaft lobes	1. Inspect camshaft lobes. 2. If damaged replace camshaft and all valve finger-followers.
Damaged or misaligned timing gears	1. Inspect timing gears. 2. Replace all damaged components.

© Copyright Chevrolet. All rights reserved

Lower Engine Noise, Regardless of Engine Speed

Condition	Action
Worn accessory drive components (abnormalities such as severe cracking, bumps or missing areas in the accessory drive belt and/or misalignment of the system components.)	1. Inspect the accessory drive components. 2. Repair or replace all damaged components.
Low oil pressure	Insufficient or poor oil supply to crankshaft and big end bearings. 1. Perform oil pressure test. 2. Repair or replace all damaged components.
Leaking and/or sticking fuel injection nozzle (A stuck fuel injection nozzle can cause a noise similar to a damaged piston, rod or rod bearing.)	1. Inspect the cylinder balance with scan tool to help locate the cylinder that is the source of the noise. 2. If you cannot locate the cylinder that is the source of the noise, diagnose the engine for mechanical damage. 3. If it has been determined that the fuel injection nozzle is causing the noise, replace the fuel injection nozzle.
Loose and/or damaged crankshaft pulley	1. Inspect crankshaft pulley and pulley bolt. 2. Repair or replace all damaged components.
Loose torque converter bolts	1. Inspect torque converter bolts and flywheel. 2. Repair or replace all damaged components.
Loose and/or damaged flywheel	1. Inspect flywheel and flywheel attaching bolts. 2. Repair or replace all damaged components.
Excessive gudgeon pin-to-bore clearance	1. Inspect the piston, gudgeon pin, and the connecting rod. 2. Repair or replace all damaged components.
Misaligned or bent connecting rod	1. Inspect connecting rod and big end bearings. 2. Repair or replace all damaged components.
	1. Inspect the big end bearings, connecting rods, crankshaft and

Excessive big end bearing clearance	crankshaft journals. 2. Repair or replace all damaged components.
Excessive crankshaft bearing clearance	1. Inspect the crankshaft bearings and crankshaft journals. 2. Repair or replace all damaged components.

© Copyright Chevrolet. All rights reserved

Engine Will Not Crank - Crankshaft Will Not Rotate

Cause	Correction
Seized accessory drive system component	1. Inspect the accessory drive system components. 2. Repair or replace all damaged components.
Hydraulically locked cylinder • Coolant/antifreeze in cylinder • Oil in cylinder • Fuel in cylinder	1. Inspect for broken head gasket(s). 2. Inspect for cracked engine block or cylinder head. 3. Inspect for a sticking fuel injector.
Seized automatic transmission torque converter	1. Remove the engine assembly. The torque converter bolts are not accessible with the engine installed to the transmission. 2. Rotate the crankshaft at the pulley.
Seized manual gearbox	1. Disengage the clutch. 2. Rotate crankshaft at the pulley.
Material in cylinder • Broken valve • Piston material • Foreign material	1. Inspect the cylinder for damaged components and/or foreign materials. 2. Repair or replace as required.
Seized crankshaft or big end bearing	1. Inspect the crankshaft and big end bearings. 2. Repair as required.
Bent or broken connecting rod	1. Inspect the connecting rods. 2. Repair as required.
Broken crankshaft	1. Inspect the crankshaft. 2. Repair as required.

&#169© Copyright Chevrolet. All rights reserved

Drive Belt Chirping, Squeal, and Whine Diagnosis

Diagnostic Aids

- A chirping or squeal noise may be intermittent due to moisture on the drive belts or the pulleys. It may be necessary to spray a small amount of water on the drive belts in order to duplicate the customers concern. If spraying water on the drive belt duplicates the symptom, cleaning the belt pulleys may be the probable solution.
- If the noise is intermittent, verify the accessory drive components by varying their loads making sure they are operated to their maximum capacity. An overcharged A/C system, power steering system with a pinched hose or wrong fluid, or a generator failing are suggested items to inspect.
- A chirping, squeal or whine noise may be caused by a loose or improper installation of a body or suspension component. Other items of the vehicle may also cause the noise.
- The drive belts will not cause a whine noise.

Test Description

The numbers below refer to the step numbers on the diagnostic table.

2. The noise may not be engine related. This step is to verify that the engine is making the noise. If the engine is not making the noise do not proceed further with this table.

3. The noise may be an internal engine noise. Removing the drive belts one at a time and operating the engine for a brief period will verify the noise is related to the drive belt. When removing the drive belt the water pump may not be operating and the engine may overheat. Also DTCs may set when the engine is operating with the drive belts removed.

4. Inspect all drive belt pulleys for pilling. Pilling is the small balls or pills or it can be strings in the drive belt grooves from the accumulation of rubber dust.

6. Misalignment of the pulleys may be caused from improper mounting of the accessory drive component, incorrect installation of the accessory drive component pulley, or the pulley bent inward or outward from a previous repair. Test for a misaligned pulley using a straight edge in the pulley grooves across two or three pulleys. If a misaligned pulley is found refer to that accessory drive component for the proper installation procedure for that pulley.

10. Inspecting of the fasteners can eliminate the possibility that a wrong bolt, nut, spacer, or washer was installed.

12. Inspecting the pulleys for being bent should include inspecting for a dent or other damage to the pulleys that would prevent the drive belt from not seating properly in all of the pulley grooves or on the smooth surface of a pulley when the back side of the belt is used to drive the pulley.

14. This test is to verify that the drive belt tensioner operates properly. If the drive belt tensioner is not operating properly, proper belt tension may not be achieved to keep

the drive belt from slipping which could cause a squeal noise.

15. This test is to verify that the drive belt is not too long, which would prevent the drive belt tensioner from working properly. Also if an incorrect length drive belt was installed, it may not be routed properly and may be turning an accessory drive component in the wrong direction.

16. Misalignment of the pulleys may be caused from improper mounting of the accessory drive component, incorrect installation of the accessory drive component pulley, or the pulley bent inward or outward from a previous repair. Test for a misaligned pulley using a straight edge in the pulley grooves across two or three pulleys. If a misaligned pulley is found refer to that accessory drive component for the proper installation procedure for that pulley.

17. This test is to verify that the pulleys are the correct diameter or width. Using a known good vehicle compare the pulley sizes.

19. Replacing the drive belt when it is not damaged or there is not excessive pilling will only be a temporary repair.

Step	Action	Yes	No
Caution: Do not use belt dressing on the drive belt. Belt dressing causes the breakdown of the composition of the drive belt. Failure to follow this recommendation will damage the drive belt. DEFINITION: The following items are indications of chirping: • A high pitched noise that is heard once per revolution of the drive belt or a pulley. • Chirping may occur on cold damp start-ups and will subside once the vehicle reaches normal operating temp. DEFINITION: The following items are indications of drive belt squeal: • A loud screeching noise that is caused by a slipping drive belt. This is unusual for a drive belt with multiple ribs. • The noise occurs when a heavy load is applied to the drive belt, such as an air conditioning compressor engagement snapping the throttle, or slipping on a seized pulley or a faulty accessory drive component. DEFINITION: The following items are indications of drive belt whine: • A high pitched continuous noise. • The noise may be caused by an accessory drive component failed bearing.			
1	Did you review the Drive Belt Symptom operation and perform the necessary inspections?	Go to Step 2	Go to Symptoms - Engine Mechanical
2	Verify that there is a chirping, squeal or whine noise. Does the engine make the chirping squeal or whine noise?	Go to Step 3	Go to Diagnostic Aids
	1. Remove the drive belt. If the engine has multiple drive belts, remove the belts one at a time and perform the test below each time a belt is removed.		

3	2. Operate the engine for no longer than 30–40 seconds. 3. Repeat this test if necessary by removing the remaining belt(s). Does the chirping, squeal or whine noise still exist?	Go to Symptoms - Engine Mechanical	Go to Step 4
4	If diagnosing a chirping noise, inspect for severe pilling exceeding 1/3 of the belt groove depth. If diagnosing a squeal or whine noise, proceed to Step 13. Do the belt grooves have pilling?	Go to Step 5	Go to Step 6
5	Clean the drive belt pulleys with a suitable wire brush. Did you complete the repair?	Go to Step 20	Go to Step 6
6	Inspect for misalignment of the pulleys. Are any of the pulleys misaligned?	Go to Step 7	Go to Step 8
7	Replace or repair any misaligned pulleys. Did you complete the repair?	Go to Step 20	Go to Step 8
8	Inspect for bent or cracked brackets. Did you find any bent or cracked brackets?	Go to Step 9	Go to Step 10
9	Replace any bent or cracked brackets. Did you complete the repair?	Go to Step 20	Go to Step 10
10	Inspect for improper, loose or missing fasteners. Did you find the condition?	Go to Step 11	Go to Step 12
11	**Caution:** Refer to Fastener Caution in the Preface section. 1. Tighten any loose fasteners. Refer to Fastener Tightening Specifications . 2. Replace any improper or missing fasteners. Did you complete the repair?	Go to Step 20	Go to Step 12
12	Inspect for a bent pulley. Did you find the condition?	Go to Step 18	Go to Step 19
13	Inspect for an accessory drive component seized bearing or a faulty accessory drive component. If diagnosing a whine noise and the condition still exist, proceed to Diagnostic Aids. Did you find and correct the condition?	Go to Step 20	Go to Step 14

14	Test the drive belt tensioner for proper operation. Did you find and correct the condition?	Go to Step 20	Go to Step 15
15	Inspect for the correct drive belt length. Did you find and correct the condition?	Go to Step 20	Go to Step 16
16	Inspect for misalignment of a pulley. Did you find and correct the condition?	Go to Step 20	Go to Step 17
17	Inspect for the correct pulley size. Did you find and correct the condition?	Go to Step 20	Go to Diagnostic Aids
18	Replace the bent pulley. Did you complete the repair?	Go to Step 20	Go to Step 19
19	Replace the drive belt. Refer to Symptoms - Engine Mechanical . Did you complete the repair?	Go to Step 20	Go to Diagnostic Aids
20	Operate the system in order to verify the repair. Did you correct the condition?	System OK	Go to Step 3

&#169© Copyright Chevrolet. All rights reserved

Drive Belt Rumbling and Vibration Diagnosis

Diagnostic Aids

The accessory drive components can have an affect on engine vibration. Vibration from the engine operating may cause a body component or another part of the vehicle to make rumbling noise. Vibration can be caused by, but not limited to the A/C system over charged, the power steering system restricted or the incorrect fluid, or an extra load on the generator. To help identify an intermittent or an improper condition, vary the loads on the accessory drive components.

The drive belt may have a rumbling condition that cannot be seen or felt. Sometimes replacing the drive belt may be the only repair for the symptom.

If replacing the drive belt, completing the diagnostic table, and the noise is only heard when the drive belts are installed, there might be an accessory drive component with a failure. Varying the load on the different accessory drive components may aid in identifying which component is causing the rumbling noise.

Test Description

The numbers below refer to the step numbers on the diagnostic table.

2. This test is to verify that the symptom is present during diagnosing. Other vehicle components may cause a similar symptom.
3. This test is to verify that one of the drive belts is causing the rumbling noise or vibration. Rumbling noise may be confused with an internal engine noise due to the similarity in the description. Remove only one drive belt at a time if the vehicle has multiple drive belts. When removing the drive belts the water pump may not be operating and the engine may overheat. Also DTCs may set when the engine is operating with the drive belts removed.
4. Inspecting the drive belts is to ensure that they are not causing the noise. Small cracks across the ribs of the drive belt will not cause the noise. Belt separation can be recognised at the edge of the belt or felt as a lump in the belt.
5. Small amounts of pilling is normal condition and acceptable. When the pilling is severe the drive belt does not have a smooth surface for proper operation.
9. Inspecting of the fasteners can eliminate the possibility that the wrong bolt, nut, spacer, or washer was installed.
11. This step should only be performed if the water pump is driven by the drive belt. Inspect the water pump shaft for being bent. Also inspect the water pump bearings for smooth operation and excessive play. Compare the water pump with a known good water pump.
12. Accessory drive component brackets that are bent, cracked, or loose may put extra strain on that accessory component causing it to vibrate.

Step	Action	Yes	No

DEFINITION: The following items are indications of drive belt rumbling:

- A low pitch tapping, knocking, or thumping noise heard at or just above idle.
- Heard once per revolution of the drive belt or a pulley.
- Rumbling may be caused from:
  - Pilling, the accumulation of rubber dust that forms small balls (pills) or strings in the drive belt pulley groove
  - The separation of the drive belt
  - A damaged drive belt.

DEFINITION: The following items are indications of drive belt vibration:

- The vibration is engine-speed related.
- The vibration may be sensitive to accessory load.

1	Did you review the Drive Belt Symptom operation and perform the necessary inspections?	Go to Step 2	Go to Symptoms - Engine Mechanical
2	Verify that there is a rumbling noise or that the vibration is engine related. Does the engine make the rumbling noise or vibration?	Go to Step 3	Go to Diagnostic Aids
3	1. Remove the drive belt. If the engine has multiple drive belts, remove the belts one at a time and perform the test below each time a belt is removed. 2. Operate the engine for no longer than 30–40 seconds. 3. Repeat this test if necessary by removing the remaining belt(s). Does the rumbling or vibration still exist?	Go to Symptoms - Engine Mechanical	Go to Step 4
4	Inspect the drive belts for wear, damage, separation, sections of missing ribs, and debris build-up. Did you find any of these conditions?	Go to Step 7	Go to Step 5
5	Inspect for severe pilling of more than 1/3 of the drive belt pulley grooves. Did you find severe pilling?	Go to Step 6	Go to Step 7
6	1. Clean the drive belt pulleys using a suitable wire brush. 2. Reinstall the drive belts. Did you correct the condition?	Go to Step 8	Go to Step 7
7	Install a new drive belt. Did you complete the replacement?	Go to Step 8	Go to Step 9

8	Operate the system in order to verify the repair. Did you correct the condition?	System OK	Go to Step 9
9	Inspect for improper, loose or missing fasteners. Did you find any of these conditions?	Go to Step 10	Go to Step 11
10	**Caution:** Refer to Fastener Caution in the Preface section. 1. Tighten any loose fasteners. Refer to Fastener Tightening Specifications . 2. Replace improper or missing fasteners. Did you complete the repair?	Go to Step 12	Go to Step 11
11	Inspect for bent or cracked brackets. Did you find and correct the condition?	Go to Step 12	Go to Diagnostic Aids
12	Operate the system in order to verify the repair. Did you correct the condition?	System OK	Go to Step 3

&#169© Copyright Chevrolet. All rights reserved

Drive Belt Falls Off and Excessive Wear Diagnosis

Diagnostic Aids

If the drive belt repeatedly falls off the drive belt pulleys, this is because of pulley misalignment.

An extra load that is quickly applied on released by an accessory drive component may cause the drive belt to fall off the pulleys. Verify the accessory drive components operate properly.

If the drive belt is the incorrect length, the drive belt tensioner may not keep the proper tension on the drive belt.

Excessive wear on a drive belt is usually caused by an incorrect installation or the wrong drive belt for the application.

Minor misalignment of the drive belt pulleys will not cause excessive wear, but will probably cause the drive belt to make a noise or to fall off.

Excessive misalignment of the drive belt pulleys will cause excessive wear but may also make the drive belt fall off.

Test Description

The numbers below refer to the step numbers on the diagnostic table.

2. This inspection is to verify the condition of the drive belt. Damage may of occurred to the drive belt when the drive belt fell off. The drive belt may of been damaged, which caused the drive belt to fall off. Inspect the belt for cuts, tears or sections of ribs missing.

4. Misalignment of the pulleys may be caused from improper mounting of the accessory drive component, incorrect installation of the accessory drive component pulley, or the pulley bent inward or outward from a previous repair. Test for a misaligned pulley using a straight edge in the pulley grooves across two or three pulleys. If a misaligned pulley is found refer to that accessory drive component for the proper installation procedure of that pulley.

5. Inspecting the pulleys for being bent should include inspecting for a dent or other damage to the pulleys that would prevent the drive belt from not seating properly in all of the pulley grooves or on the smooth surface of a pulley when the back side of the belt is used to drive the pulley.

6. Accessory drive component brackets that are bent or cracked will let the drive belt fall off.

7. Inspecting of the fasteners can eliminate the possibility that a wrong bolt, nut, spacer or washer was installed. Missing. loose, or the wrong fasteners may cause pulley misalignment from the bracket moving under load. Over tightening of the fasteners may cause misalignment of the accessory component bracket.

13. The inspection is to verify the drive belt is correctly installed on all of the drive belt pulleys. Wear on the drive belt may be caused by mis-positioning the drive belt by one groove on a pulley.

14. The installation of a drive belt that is two wide or two narrow will cause wear on the drive belt. The drive belt ribs should match all of the grooves on all of the pulleys.

15. This inspection is to verify the drive belt is not contacting any parts of the engine or body while the engine is operating. There should be sufficient clearance when the drive belt accessory drive components load varies. The drive belt should not come in contact with an engine or a body component when snapping the throttle.

Step	Action	Yes	No
DEFINITION: The drive belt falls off the pulleys or may not ride correctly on the pulleys. DEFINITION: Wear at the outside ribs of the drive belt due to an incorrectly installed drive belt.			
1	Did you review the Drive Belt Symptom operation and perform the necessary inspections?	Go to Step 2	Go to Symptoms - Engine Mechanical
2	If diagnosing high wear, proceed to Step 13. If diagnosing a drive belt that falls off, inspect for a damaged drive belt. Did you find the condition?	Go to Step 3	Go to Step 4
3	Install a new drive belt. Does the drive belt continue to fall off?	Go to Step 4	System OK
4	Inspect for misalignment of the pulleys. Did you find and repair the condition?	Go to Step 12	Go to Step 5
5	Inspect for a bent or dented pulley. Did you find and repair the condition?	Go to Step 12	Go to Step 6
6	Inspect for a bent or a cracked bracket. Did you find and repair the condition?	Go to Step 12	Go to Step 7
7	Inspect for improper, loose or missing fasteners. Did you find loose or missing fasteners?	Go to Step 8	Go to Step 9
8	**Caution:** Refer to Fastener Caution in the Preface section. 1. Tighten any loose fasteners. Refer to Fastener Tightening Specifications . 2. Replace improper or missing fasteners. Does the drive belt continue to fall off?	Go to Step 9	System OK
9	Test the drive belt tensioner for operating correctly.		

	Does the drive belt tensioner operate correctly?	Go to Step 11	Go to Step 10
10	Replace the drive belt tensioner. Does the drive belt continue to fall off?	Go to Step 11	System OK
11	Inspect for failed drive belt idler and drive belt tensioner pulley bearings. Did you find and repair the condition?	Go to Step 12	Go to Diagnostic Aids
12	Operate the system in order to verify the repair. Did you correct the condition?	System OK	Go to Step 2
13	Inspect the drive belt for the proper installation. Did you find this condition?	Go to Step 16	Go to Step 14
14	Inspect for the proper drive belt. Did you find this condition?	Go to Step 16	Go to Step 15
15	Inspect for the drive belt rubbing against a bracket, hose, or wiring harness. Did you find and repair the condition?	Go to Step 17	Go to Diagnostic Aids
16	Replace the drive belt. Did you complete the replacement?	Go to Step 17	-
17	Operate the system in order to verify the repair. Did you correct the condition?	System OK	-

© Copyright Chevrolet. All rights reserved

Engine Mount Replacement - Right Side

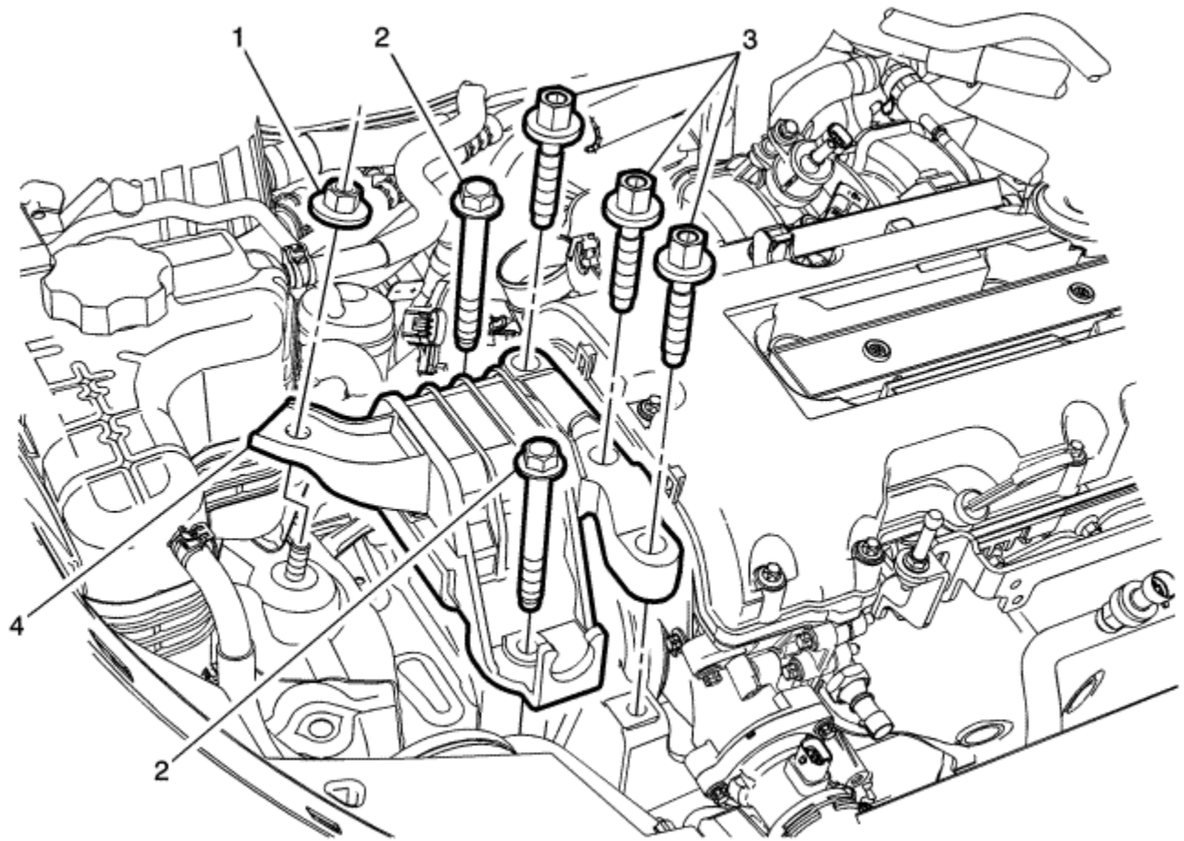

Callout	Component Name
Preliminary Procedures	

1. Remove the air cleaner assembly. Refer to Air Cleaner Assembly Replacement .
2. Install engine support fixture. Refer to Engine Support Fixture .
3. Prior to removing the mount, mark the mount location using spray paint or a marker for correct positioning during installation.

1	Engine Mount Fastener **Caution:** Refer to Fastener Caution in the Preface section. **Tip** Perform the powertrain mount balancing - lower after installation of the fastener. **Tighten** 50 N·m (37 lb ft)
2	Engine Mount Fastener (Qty: 2) **Tighten** 58 N·m (43 lb ft)
3	Engine Mount Fastener (Qty: 3) **Procedure** Ensure the washer is in place before installing the bolt. **Tighten** 58 N·m (43 lb ft)
4	Engine Mount **Procedure** Transfer components as necessary.

© Copyright Chevrolet. All rights reserved

Engine Mount Inspection

1. Install the engine support fixture. Refer to Engine Support Fixture .
2. Observe the engine mount while raising the engine. Raising the engine removes the weight from the engine mount and creates slight tension on the rubber.
3. Replace the engine mount if the engine mount exhibits any of the following conditions:
   - The hard rubber is covered with heat check cracks.
   - The rubber is separated from the metal plate of the engine mount.
   - The rubber is split through the center of the engine mount.
4. For engine mount replacement, refer to Engine Mount Replacement - Right Side .
5. For rear transmission mount replacement, refer to Transmission Rear Mount Replacement .
6. For left transmission mount replacement, refer to Transmission Mount Replacement - Left Side .

&#169© Copyright Chevrolet. All rights reserved

Engine Mount Bracket Replacement - Right Side

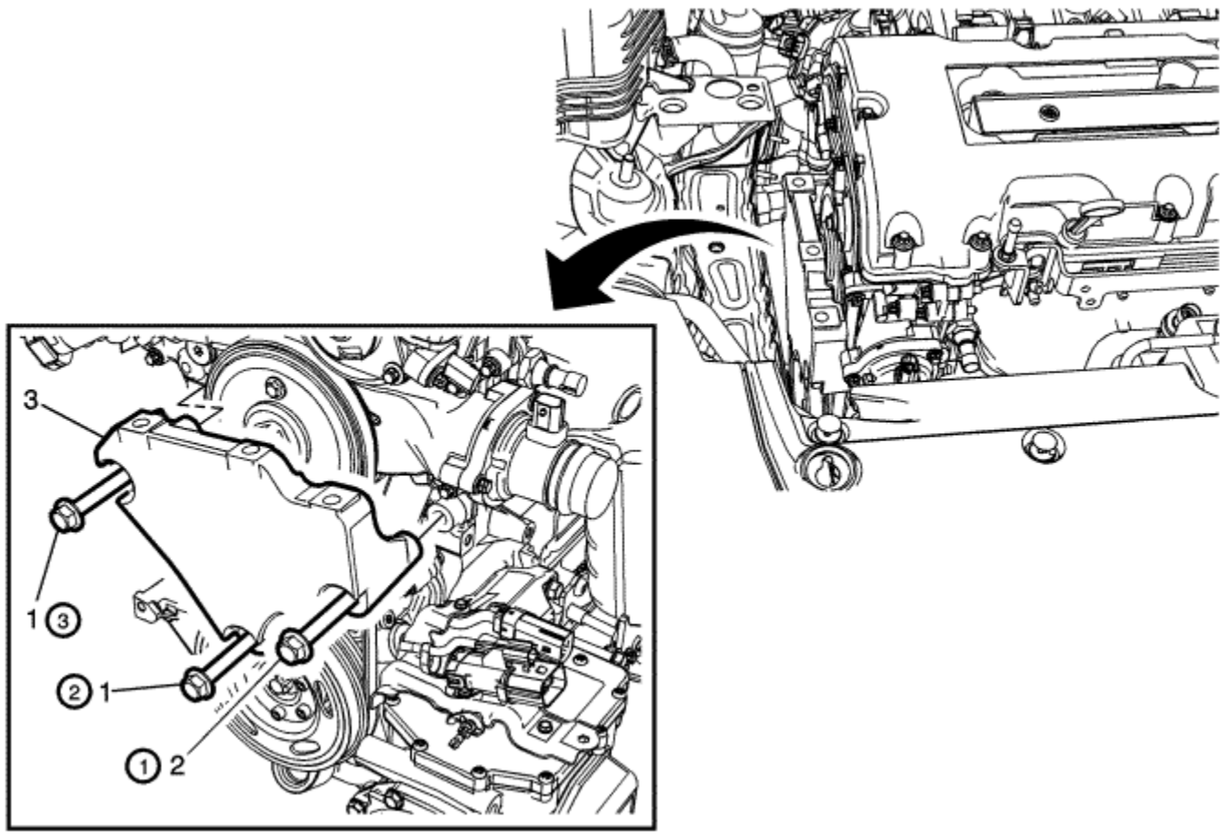

Callout	Component Name
Preliminary Procedures	

1. Remove the engine mount. Refer to Engine Mount Replacement - Right Side .
2. Remove the front wheelhouse front liner. Refer to Front Wheelhouse Front Liner Replacement .
3. Remove the nuts retaining the drive motor battery to charge cable to the frame rail and reposition. Refer to 300-Volt Battery Positive and Negative Cable Replacement :

Drive Motor Battery-to-APM Module → Drive Motor Battery-to-Charger → Inverter-to-Compressor/Heater Module → Drive Motor Battery-to-Inverter

1	Engine Mount Bracket Fastener (Qty: 2) **Caution:** This component uses torque-to-yield bolts. When servicing this component do not reuse the bolts, New torque-to-yield bolts must be installed. Reusing used torque-to-yield bolts will not provide proper bolt torque and clamp load. Failure to install NEW torque-to-yield bolts may lead to engine damage. **Caution:** Refer to Fastener Caution in the Preface section. **Procedure** 1. Raise and lower the engine as needed to access the bolts. 2. Ensure to follow the tighten sequence. **Tighten** 1. First pass: 60 N·m (44 lb ft) 2. Final pass: additional 45-60 degrees
2	Engine Mount Bracket Fastener **Procedure** Ensure to follow the tighten sequence. **Tighten** 1. First pass: 60 N·m (44 lb ft) 2. Final pass: additional 45-60 degrees
3	Engine Mount Bracket **Procedure** Transfer components as necessary.

© Copyright Chevrolet. All rights reserved

Inlet Manifold Replacement

Special Tools

BO-38185 Hose Clamp Pliers

For equivalent regional tools, refer to Special Tools .

Removal Procedure

Danger: Always perform the High Voltage Disabling procedure prior to servicing any High Voltage component or connection. Personal Protection Equipment (PPE) and proper procedures must be followed.

The High Voltage Disabling procedure will perform the following tasks:

- Identify how to disable high voltage.
- Identify how to test for the presence of high voltage.
- Identify condition under which high voltage is always present and personal protection equipment (PPE) and proper procedures must be followed.

Failure to follow the procedures exactly as written may result in serious injury or death.

1. Disable the high voltage system. Refer to High Voltage Disabling .
2. Remove the Air Cleaner Outlet Duct. Refer to Air Cleaner Outlet Duct Replacement .
3. Remove the fuel injection fuel rail assembly only. Refer to Fuel Injection Fuel Rail Assembly Replacement

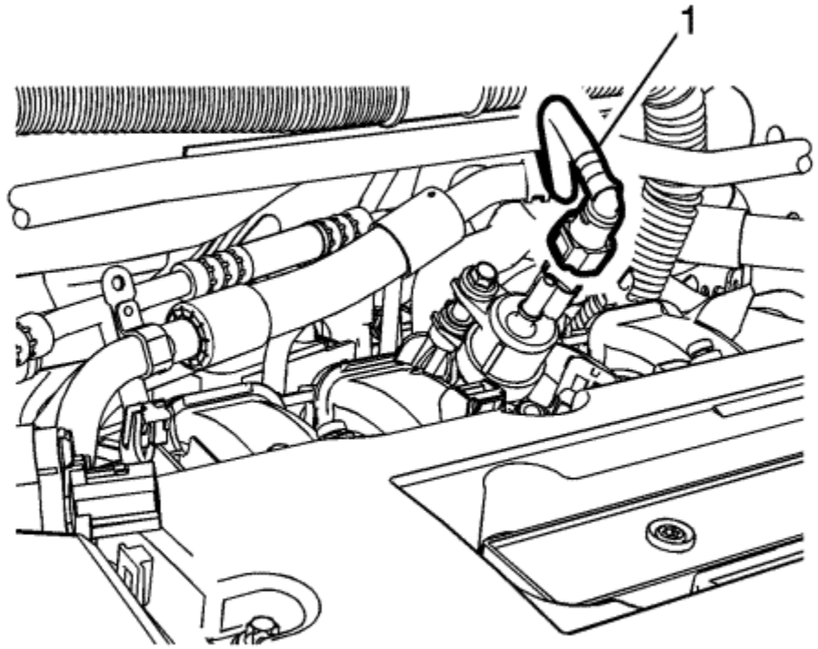

4. Remove the evaporative emission canister purge solenoid valve hose (1). Refer to Plastic Collar Quick Connect Fitting Service .
5. Unclip and reposition the engine coolant air bleed hose without draining coolant. Refer to Engine Coolant Air Bleed Hose Connector Replacement

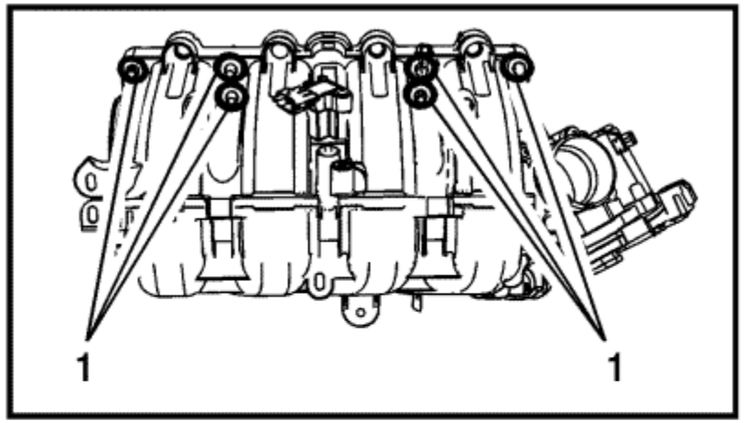

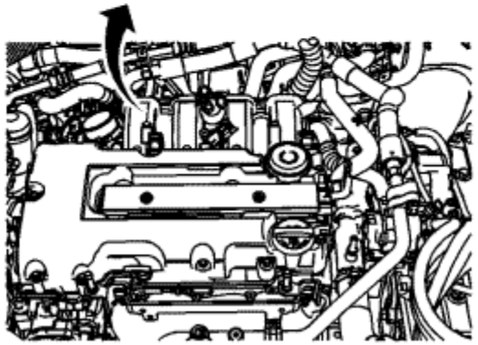

6. Remove the inlet manifold bolts (1).

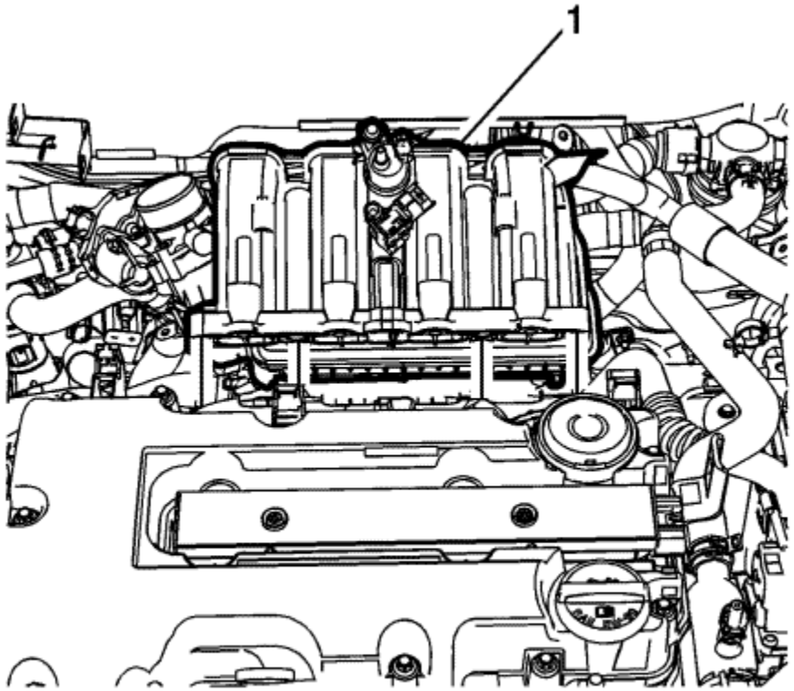

7. Remove the inlet manifold from the vehicle (1).
8. Disconnect electrical connectors as necessary.
9. To disassemble the inlet manifold. Refer to Inlet Manifold Disassemble
10. For cleaning and inspection of the inlet manifold. Refer to Inlet Manifold Cleaning and Inspection .
11. Transfer components as necessary.

Installation Procedure

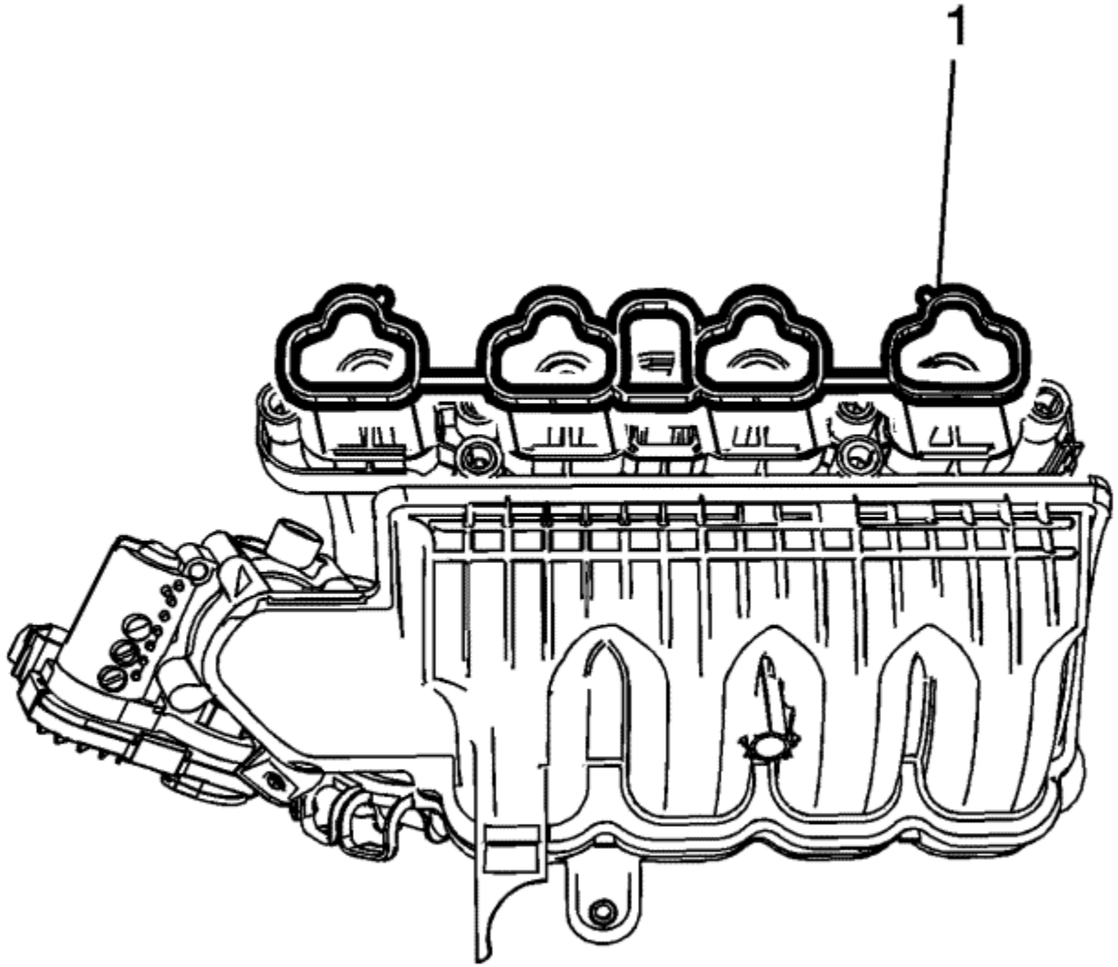

1. Ensure the surface of the inlet manifold is clean before installing the new gasket.
2. Install the manifold gasket (1).

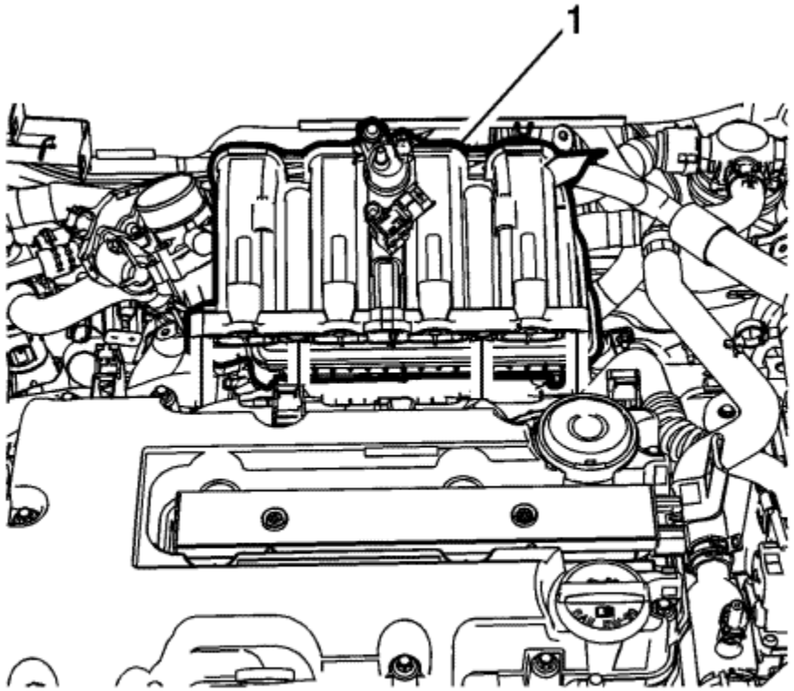

3. Install the inlet manifold in the vehicle (1).

   Caution: Refer to Fastener Caution in the Preface section.

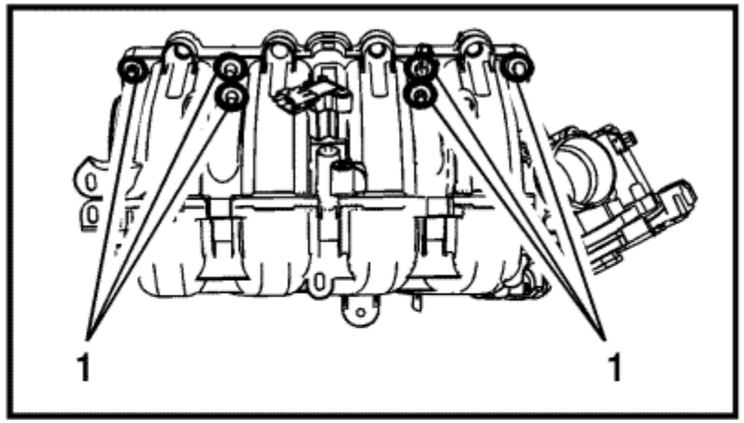

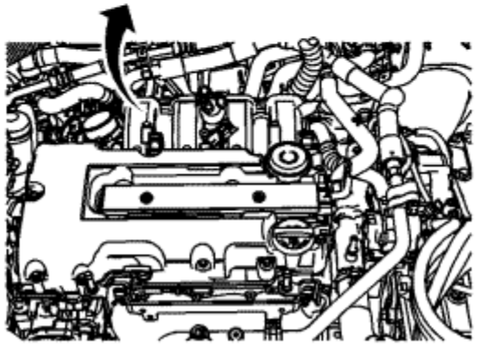

4. Install the inlet manifold bolts (1).

Tighten
Tighten the inlet manifold bolts 20 N·m (15 lb ft).

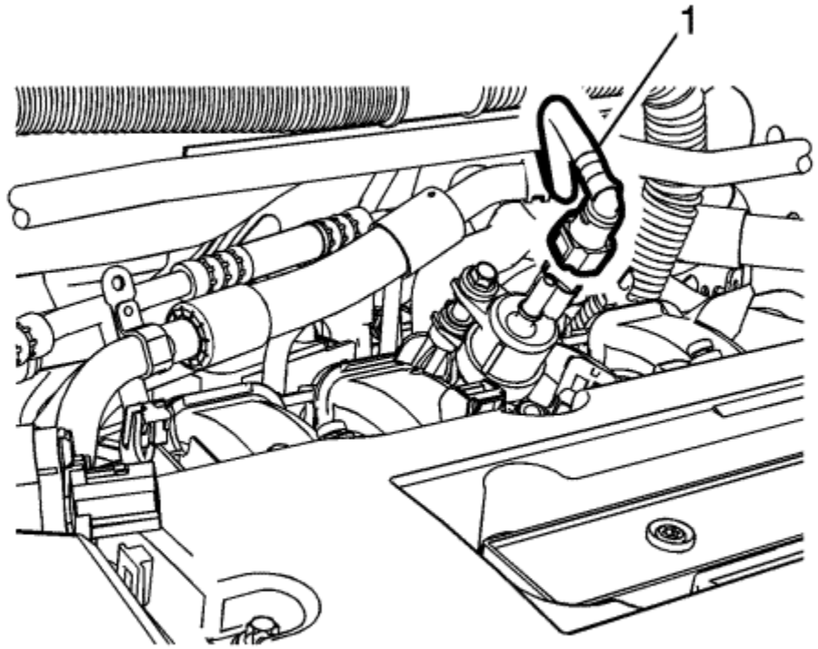

5. Install the evaporative emission canister purge solenoid valve hose (1). Refer to Plastic Collar Quick Connect Fitting Service .
6. Install the fuel injection fuel rail assembly only. Refer to Fuel Injection Fuel Rail Assembly Replacement .
7. Install the Air Cleaner Outlet Duct. Refer to Air Cleaner Outlet Duct Replacement .
8. Fill the coolant fluid. Refer to Cooling System Draining and Filling .
9. Enable the high voltage system. Refer to High Voltage Enabling .

&#169© Copyright Chevrolet. All rights reserved

Camshaft Timing Chain Replacement

Special Tools

EN-955-1 Locking Pin

For equivalent regional tools, refer to Special Tools .

Removal Procedure

1. Remove the engine front cover. Refer to Engine Front Cover with Oil Pump Replacement .

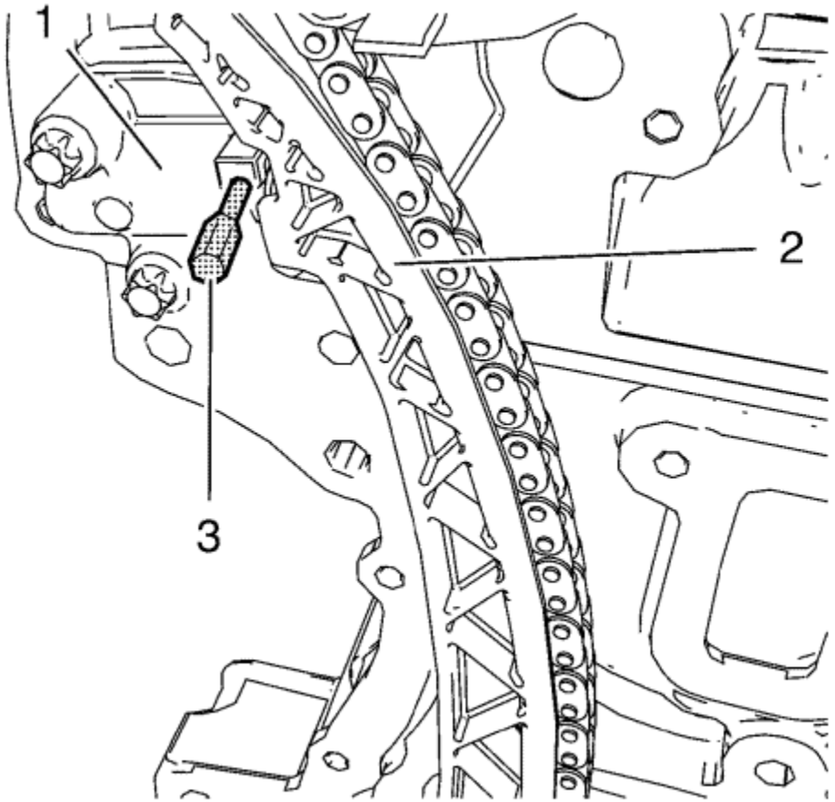

2. Push the timing chain (2) in direction to the timing chain tensioner (1) and install the *EN-955-1* pin (3).

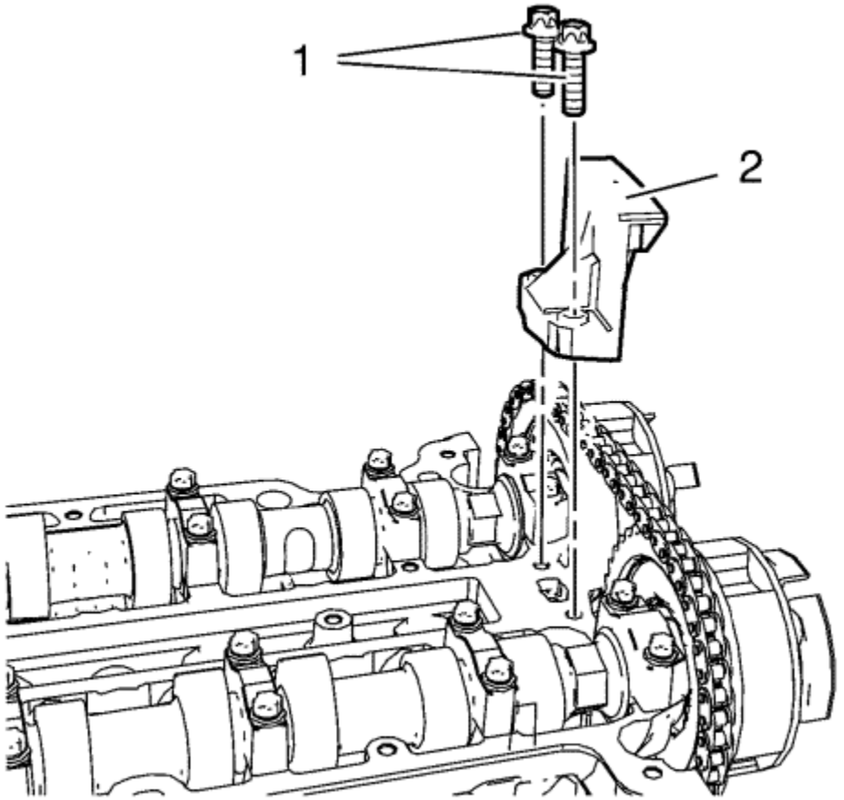

3. Remove the two upper timing chain guide bolts (1).
4. Remove the upper timing chain guide (2).

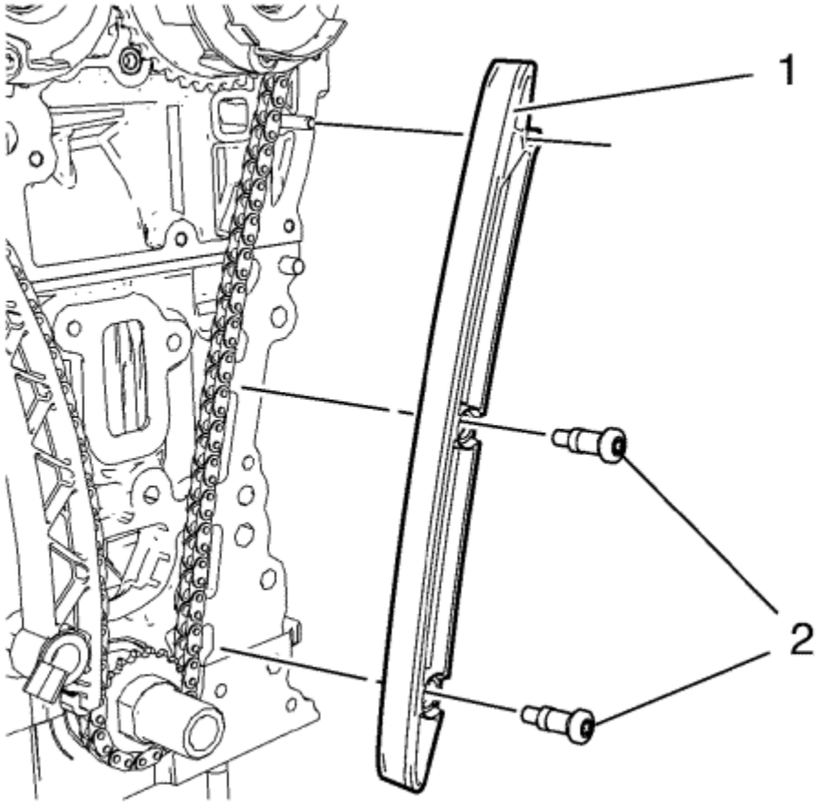

5. Remove the two timing chain guide right side bolts (2).
6. Remove the timing chain guide right side (1).

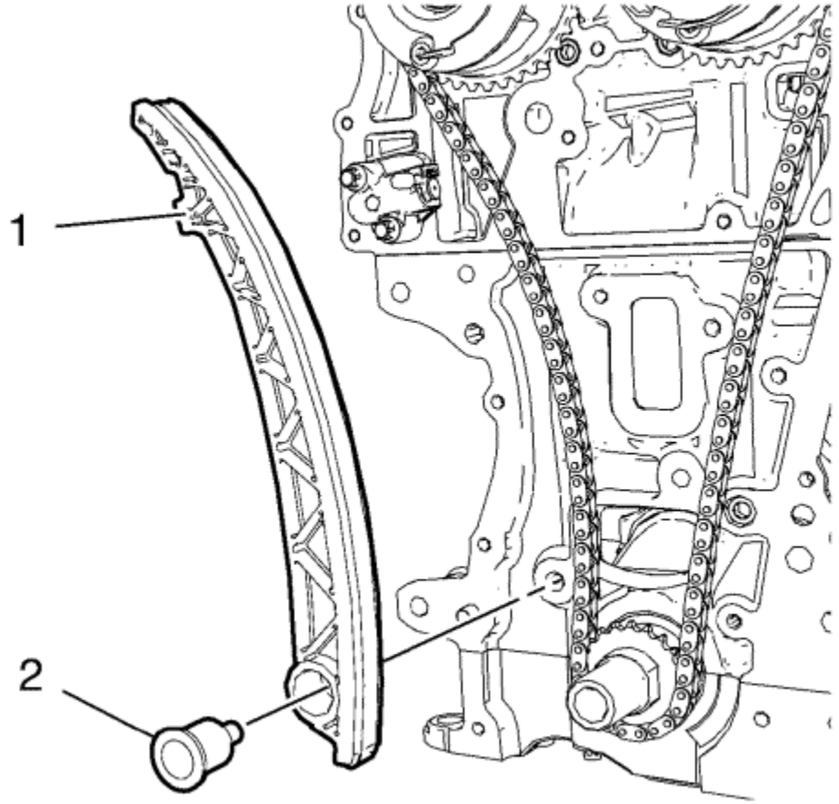

7. Remove the timing chain tensioner shoe bolt (2).
8. Remove the timing chain tensioner shoe (1).

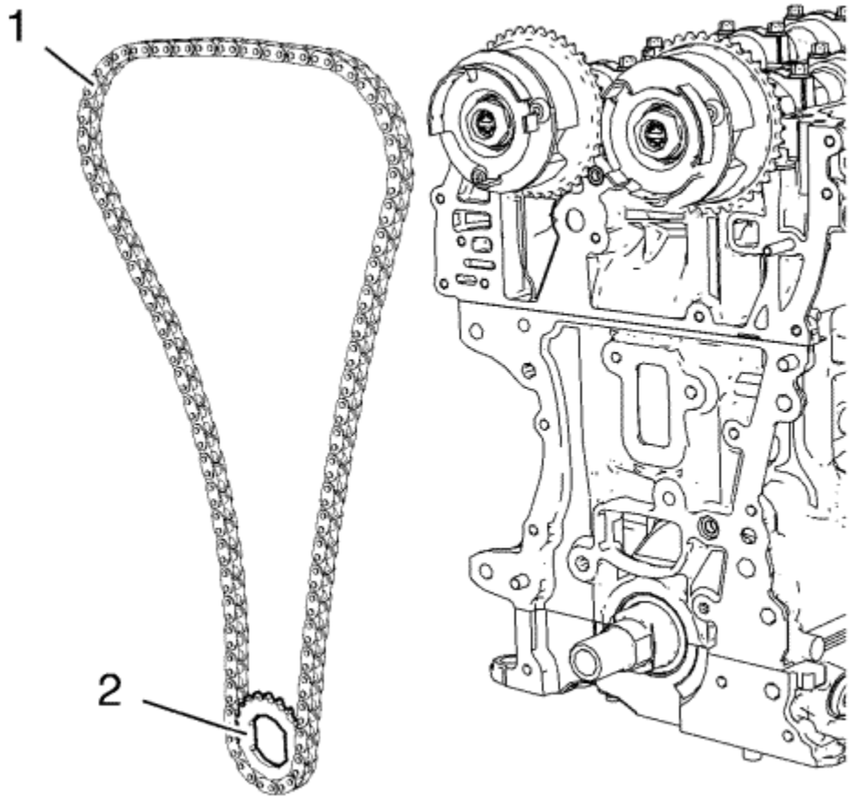

9. Remove the timing chain (1) and crankshaft sprocket (2) together as a unit.

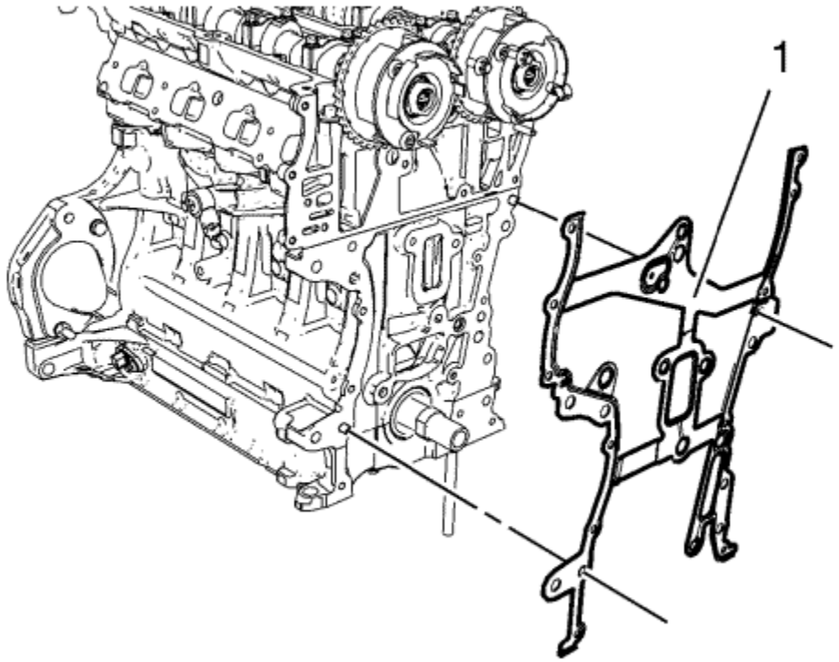

10. Remove the engine front cover gasket (1).

Installation Procedure

1. Clean the engine front cover sealing surfaces on engine block and cylinder head.

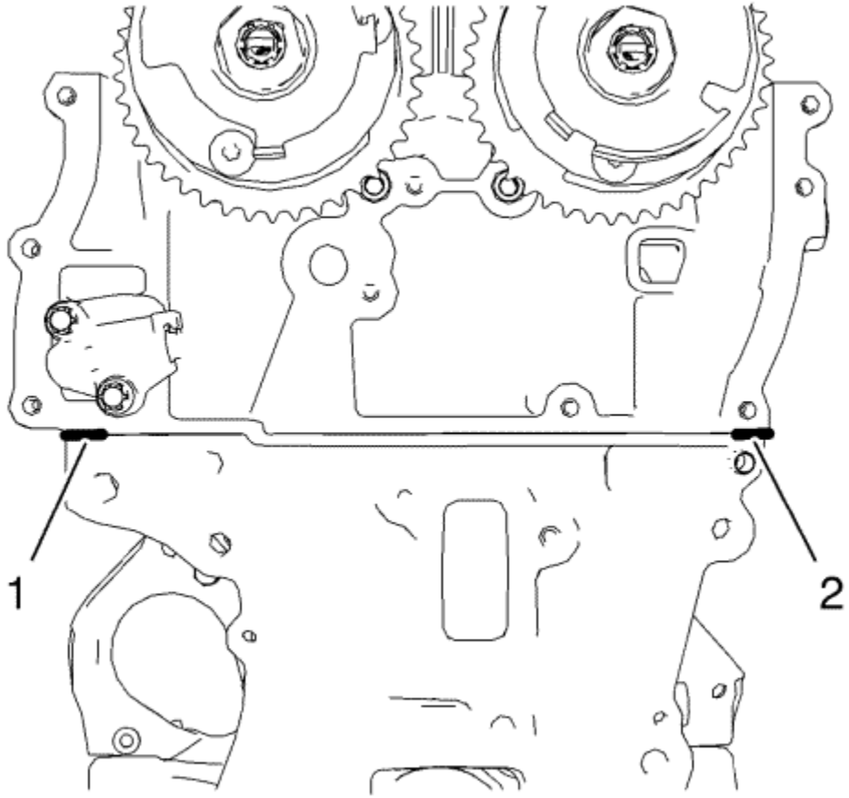

2. Apply a 2 mm (0.0787 in) bead of RTV sealant the areas shown above (1, 2).

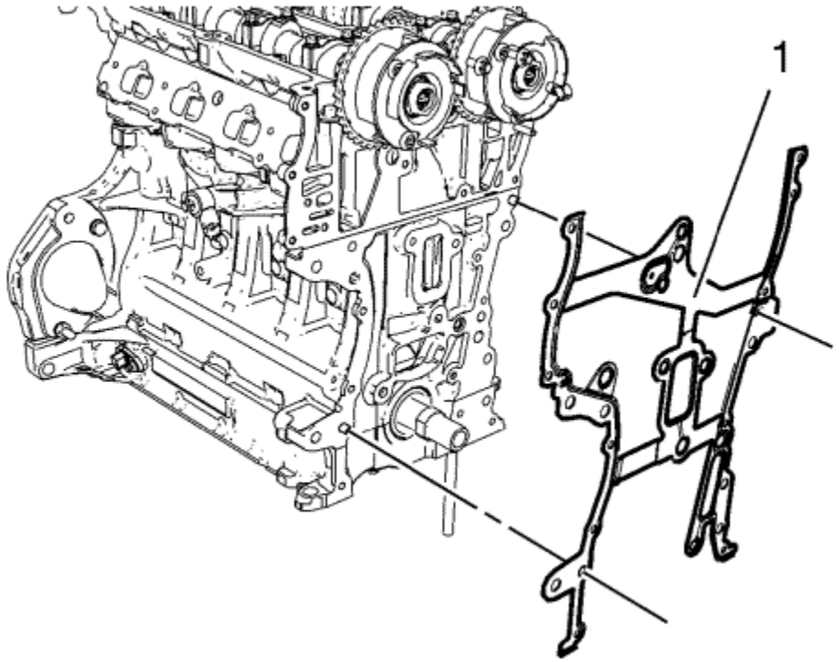

3. Install the engine front cover gasket (1).

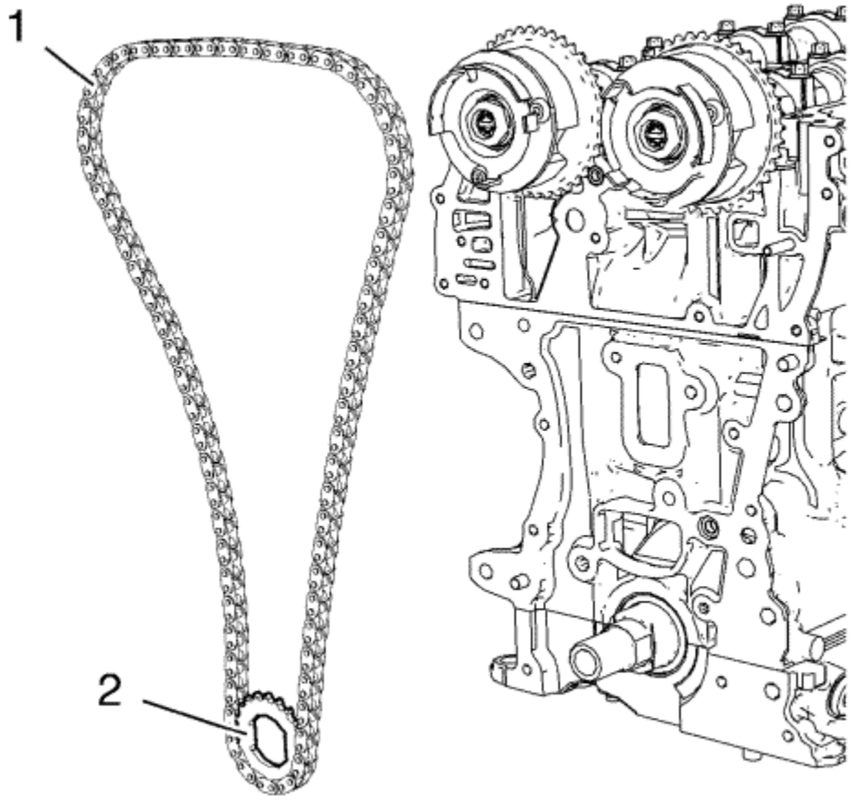

4. Install the timing chain (1) and crankshaft sprocket (2) together as a unit.

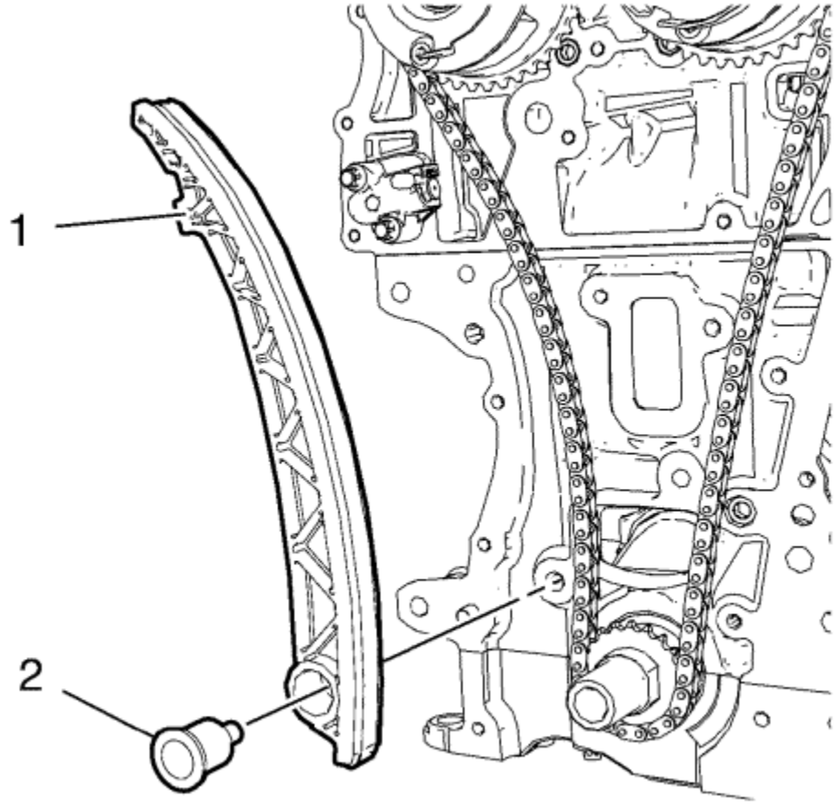

5. Install the timing chain tensioner shoe (1).

   Caution: Refer to Fastener Caution in the Preface section.

6. Install the timing chain tensioner shoe bolt (2) and tighten to **20 N·m (15 lb ft)**.

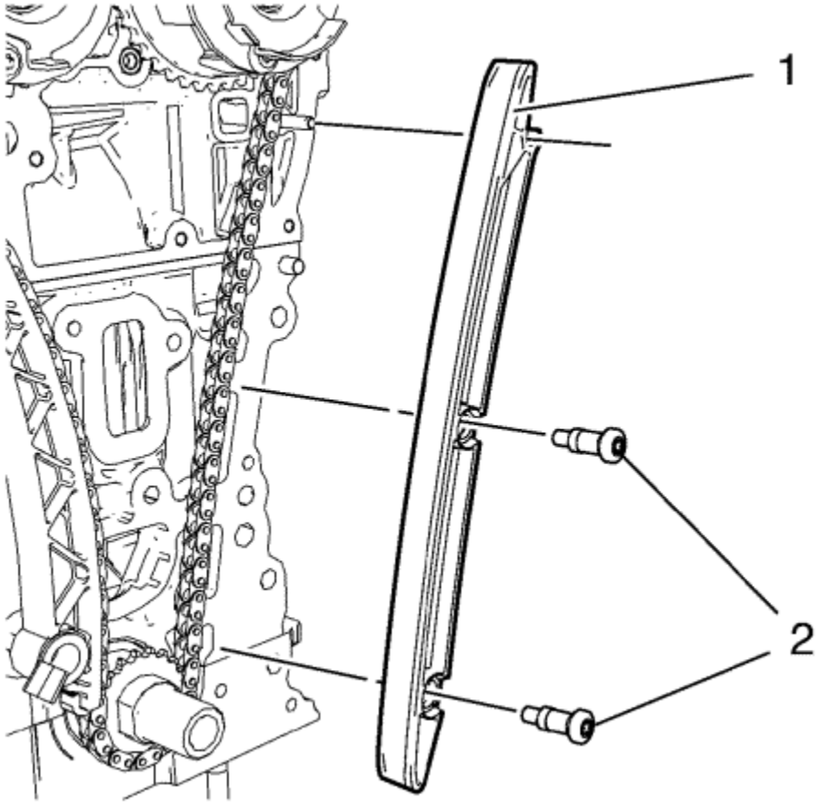

7. Install the timing chain guide right side (1).
8. Install the timing chain guide right side bolts (2) and tighten to **8 N·m (71 lb in)**.

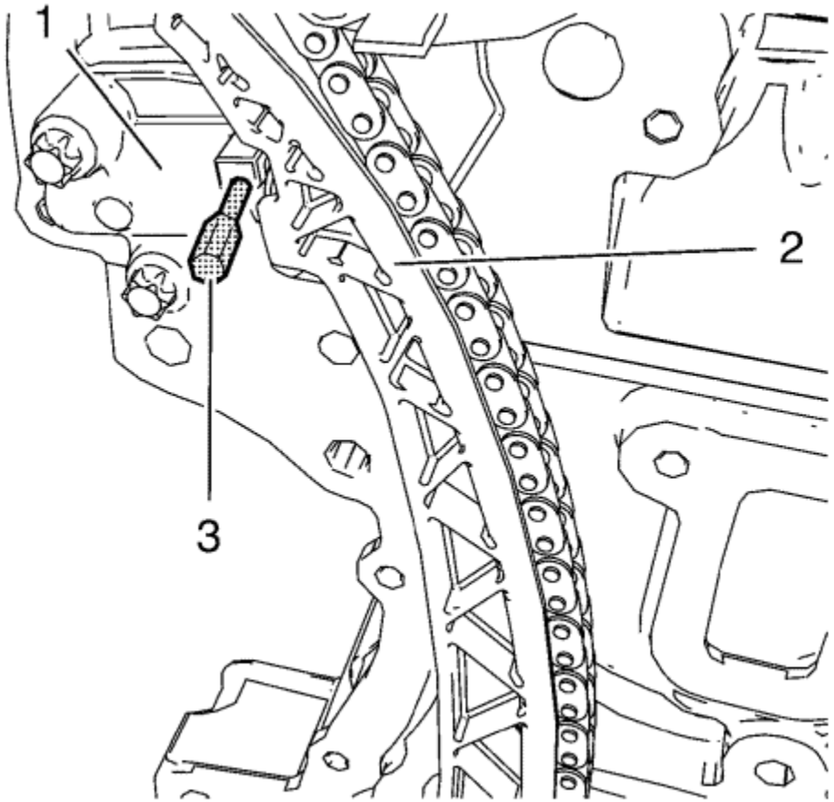

9. Push the timing chain (2) in direction of the timing chain tensioner (1) and remove *EN-955-1* pin (3).
10. Install the engine front cover. Refer to Engine Front Cover with Oil Pump Replacement .

© Copyright Chevrolet. All rights reserved

Timing Chain Tensioner Replacement

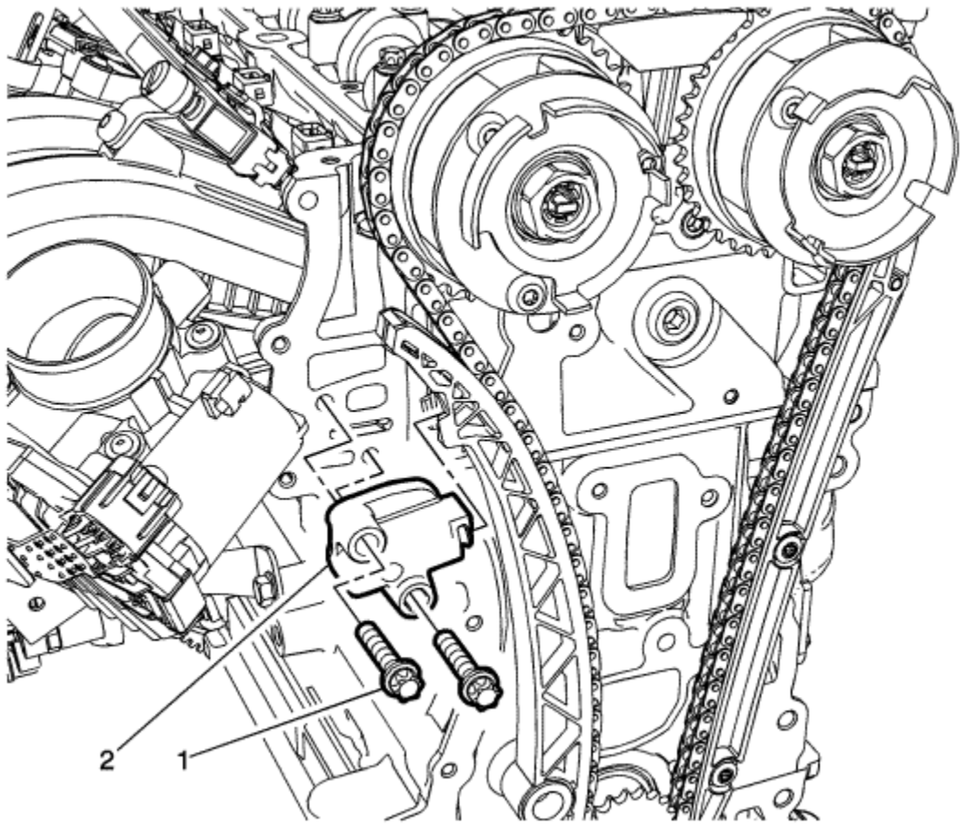

Callout	Component Name
Preliminary Procedure Remove the camshaft timing chain. Refer to Camshaft Timing Chain Replacement	
	Timing Chain Tensioner Fastener (Qty: 2)

1	**Caution:** Refer to Fastener Caution in the Preface section. **Tip** The timing chain is installed in the graphic for location use only. But is required to be removed to perform the procedure. **Tighten** 8 N·m (71 lb in)
2	Timing Chain Tensioner **Procedure** Transfer parts as necessary.

© Copyright Chevrolet. All rights reserved

Hydraulic Valve Clearance Adjuster Arm Replacement

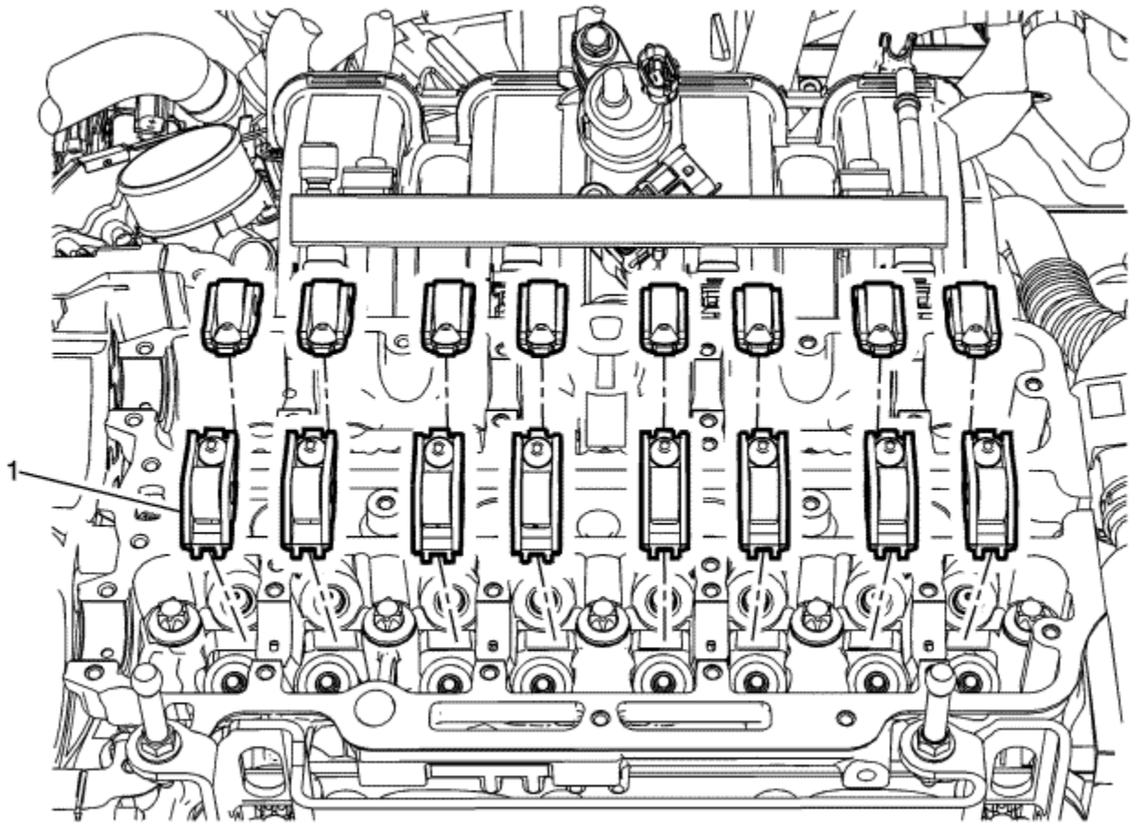

Callout	Component Name
Preliminary Procedures 1. Remove the inlet camshaft. Refer to Inlet Camshaft Replacement . 2. Remove the exhaust camshaft. Refer to Exhaust Camshaft Replacement .	

1	Remove the hydraulic valve clearance adjuster arms **Procedure** 1. Mark the hydraulic valve clearance adjuster arms upon removal to ensure installation is in the correct position. 2. Lubricate the hydraulic valve clearance adjuster arms with engine oil before installing the arms. 3. Transfer Parts as necessary.

© Copyright Chevrolet. All rights reserved

Hydraulic Valve clearance Adjuster Replacement

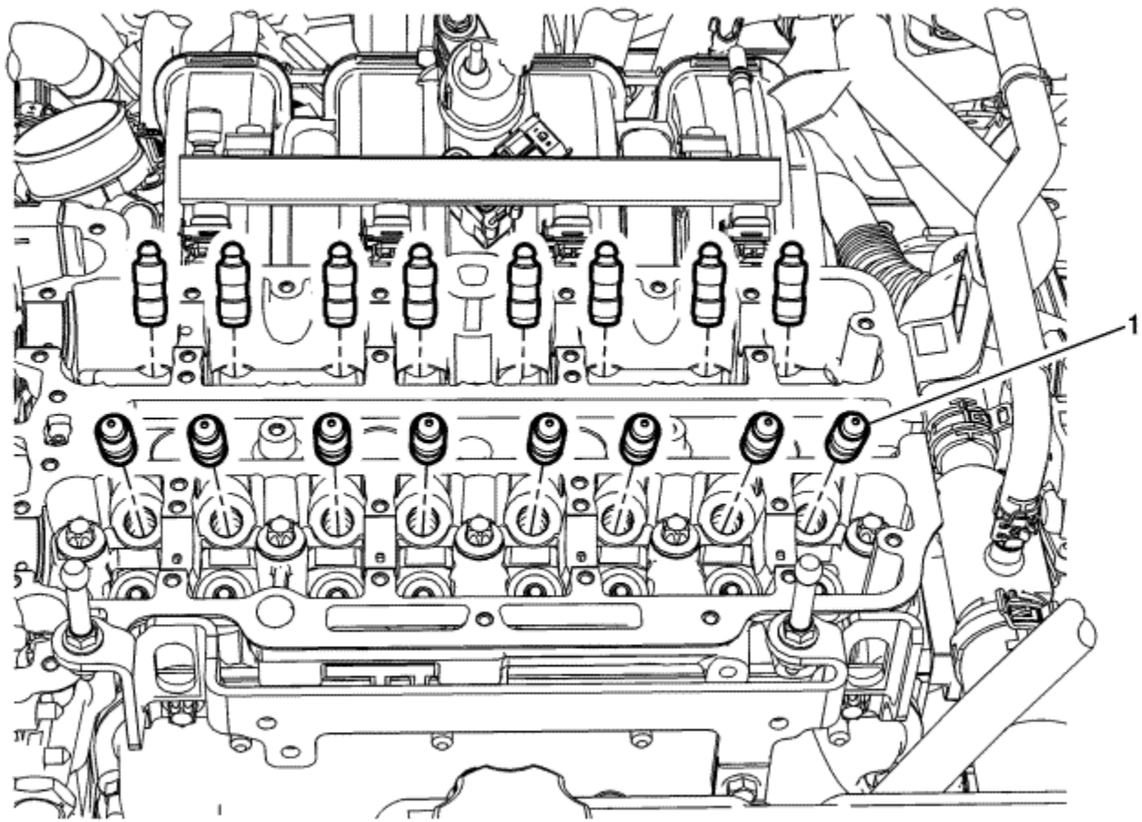

Callout	Component Name
Preliminary Procedures Remove the hydraulic valve clearance adjuster arms. Refer to Hydraulic Valve Clearance Adjuster Arm Replacement	
	Remove the hydraulic valve lash adjuster

1	**Procedure** 1. Mark the hydraulic valve clearance adjuster upon removal to ensure installation is in the correct position. 2. Lubricate the hydraulic valve lash adjuster with engine oil before installtion. 3. Transfer Parts as necessary.

© Copyright Chevrolet. All rights reserved

Camshaft Inlet and Exhaust Sprocket Replacement

Special Tools

EN-955-1 Locking Pin

For equivalent regional tools, refer to Special Tools .

Removal Procedure

Danger: Always perform the High Voltage Disabling procedure prior to servicing any High Voltage component or connection. Personal Protection Equipment (PPE) and proper procedures must be followed.

The High Voltage Disabling procedure will perform the following tasks:

- Identify how to disable high voltage.
- Identify how to test for the presence of high voltage.
- Identify condition under which high voltage is always present and personal protection equipment (PPE) and proper procedures must be followed.

Failure to follow the procedures exactly as written may result in serious injury or death.

1. Disable the high voltage system. Refer to High Voltage Disabling .
2. Drain the cooling system. Refer to Cooling System Draining and Filling .
3. Disable the high voltage system. Refer to High Voltage Disabling .
4. Remove the camshaft cover. Refer to Camshaft Cover Replacement .
5. Remove both camshaft position actuator solenoid valves. Refer to Camshaft Position Actuator Solenoid Valve Replacement : Exhaust → Intake .
6. Adjust the engine to TDC. Refer to Camshaft Timing Chain Adjustment .
7. Remove the engine mount bracket. Refer to Engine Mount Bracket Replacement - Right Side .
8. Place a floor jack with block of wood under the oil sump.
9. Remove engine support fixture. Refer Engine Support Fixture .

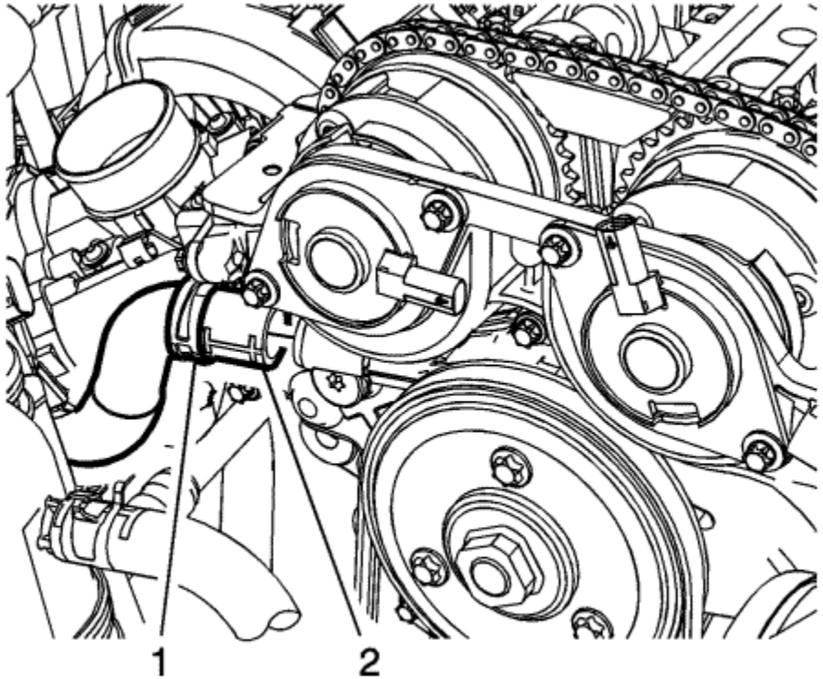

10. Remove the heater water shutoff valve inlet hose clamp (1) at engine.
11. Remove the heater water shutoff valve inlet hose (2) from engine.
12. Disconnect the heater water shutoff valve inlet hose from the engine.

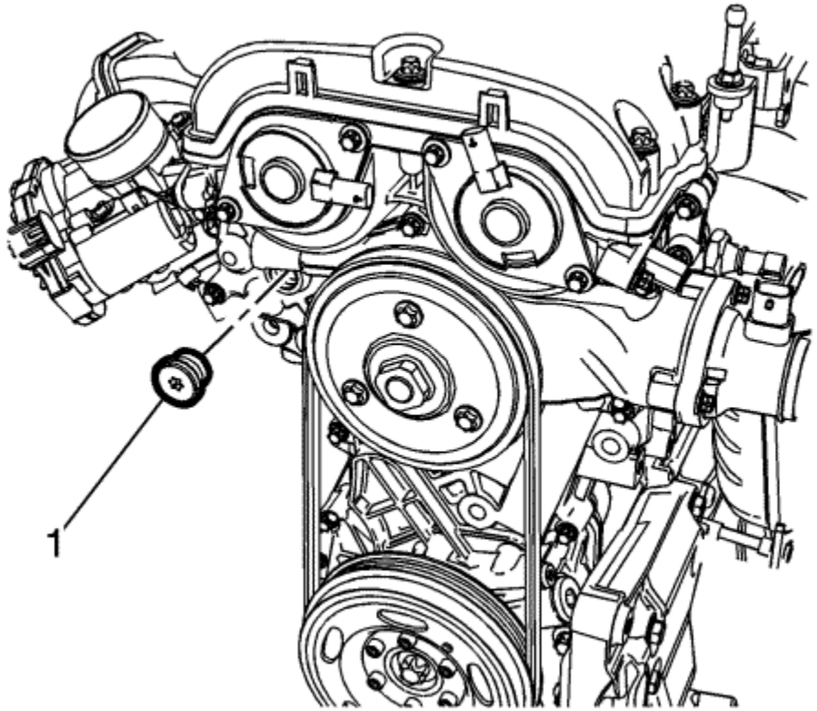

13. Remove the timing chain tensioner plug (1) from the engine front cover.

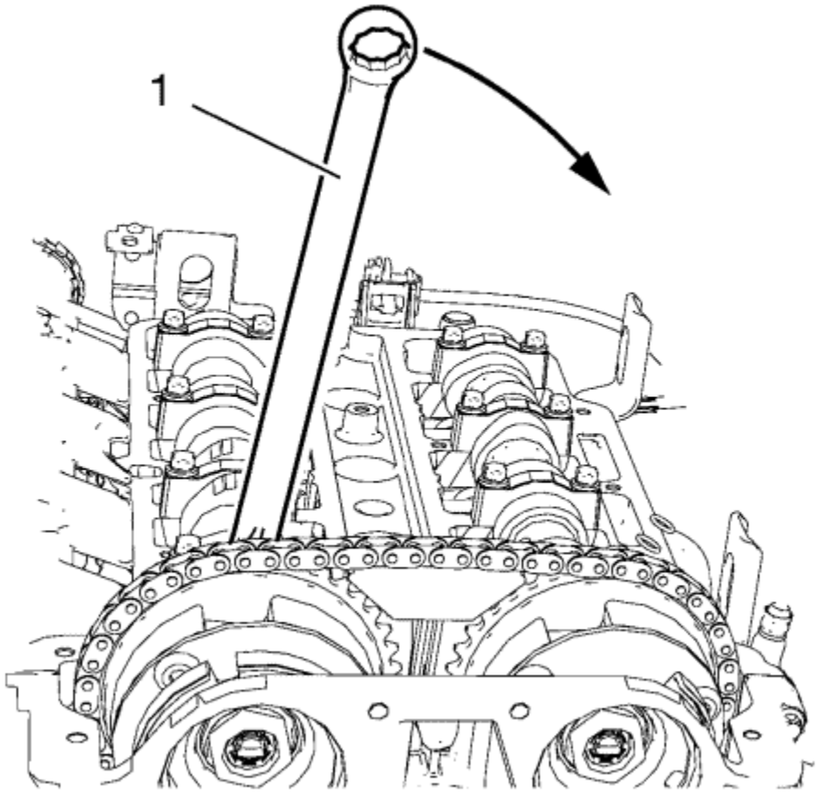

14. Install a wrench (1) on the cast hexagonal portion of the inlet camshaft, rotate the camshaft toward the exhaust camshaft in order to apply tension.

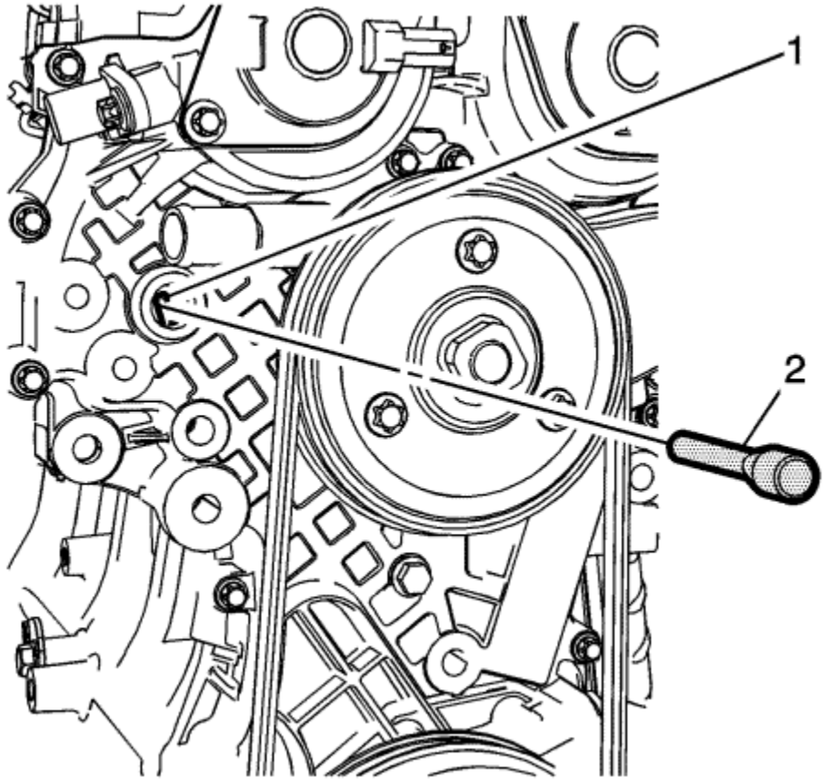

15. Install *EN-955-1* pin (2) to the timing chain tensioner bore (1).
16. Remove the wrench from inlet camshaft.

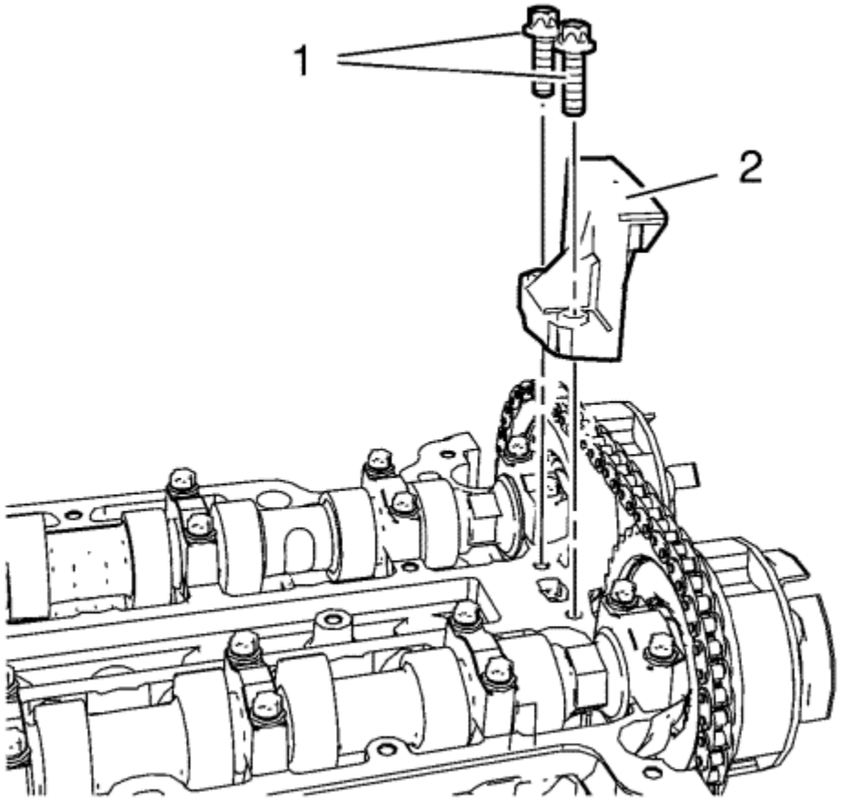

17. Remove the 2 upper timing chain guide bolts (1).
18. Remove the upper timing chain guide (2).

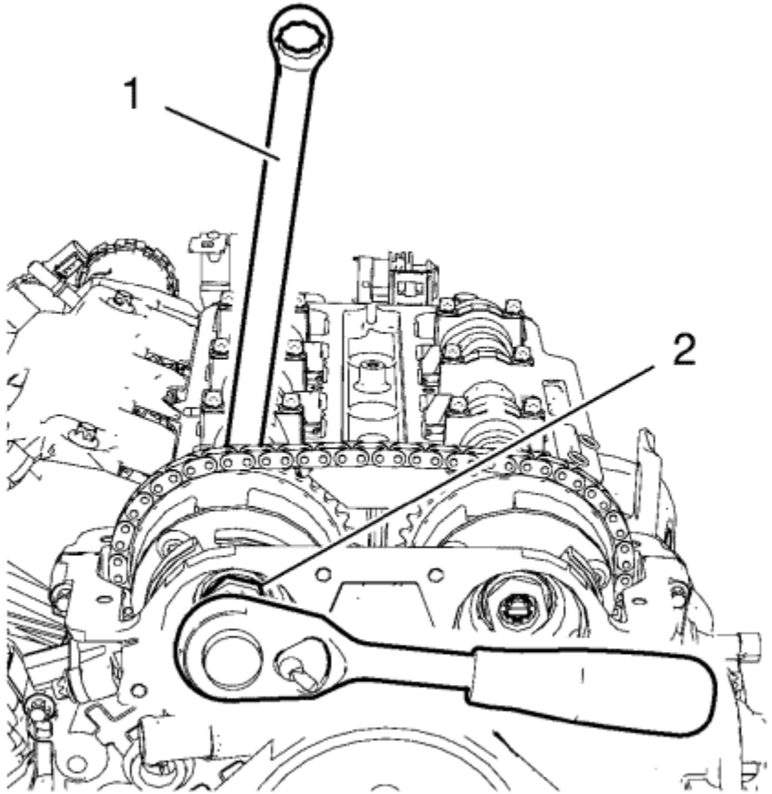

19. Loosen the inlet camshaft sprocket bolt (2) while holding up the hexagon of the inlet camshaft with a wrench (1).
20. Loosen the exhaust camshaft sprocket bolt while holding up the hexagon of the exhaust camshaft with a wrench.

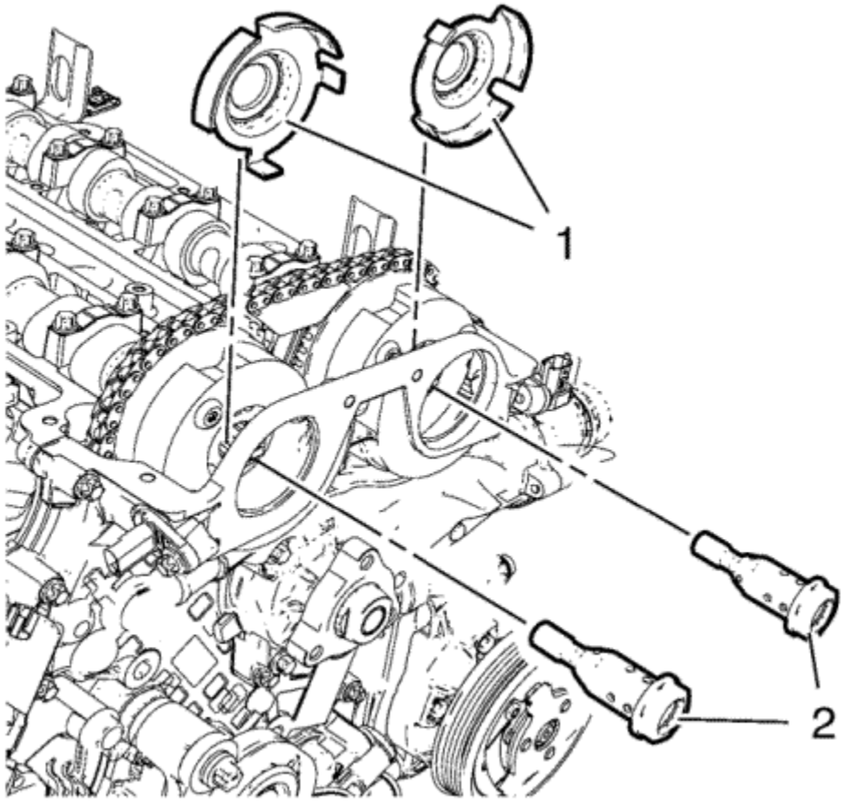

21. Remove the camshaft sprocket bolts (2) and the camshaft position exciter wheels (1).

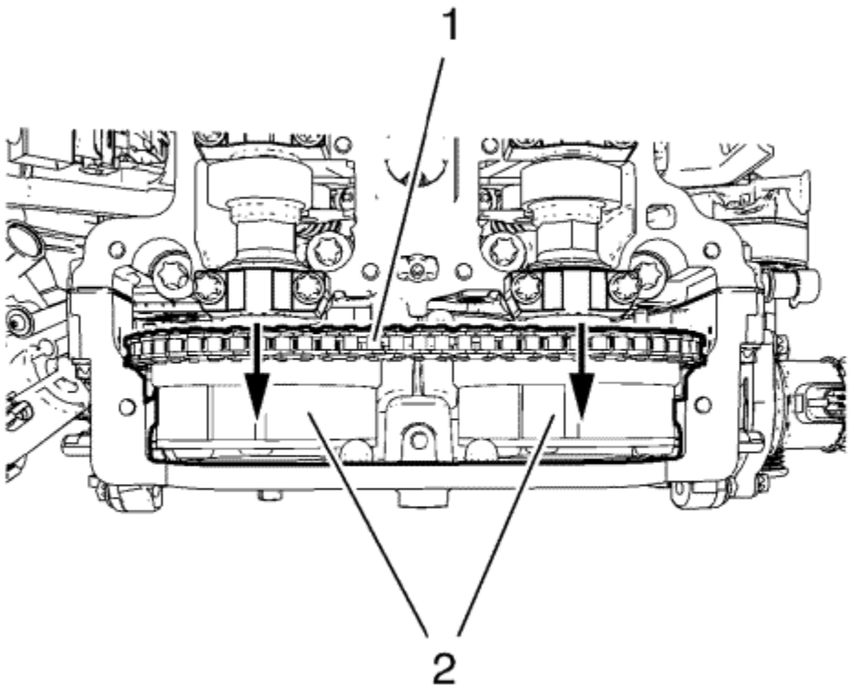

22. Remove the camshaft sprockets (2) and timing chain (1) as one unit.
23. Remove the inlet and exhaust camshaft sprocket.
24. Allow the chain to rest on the front cover.

Installation Procedure

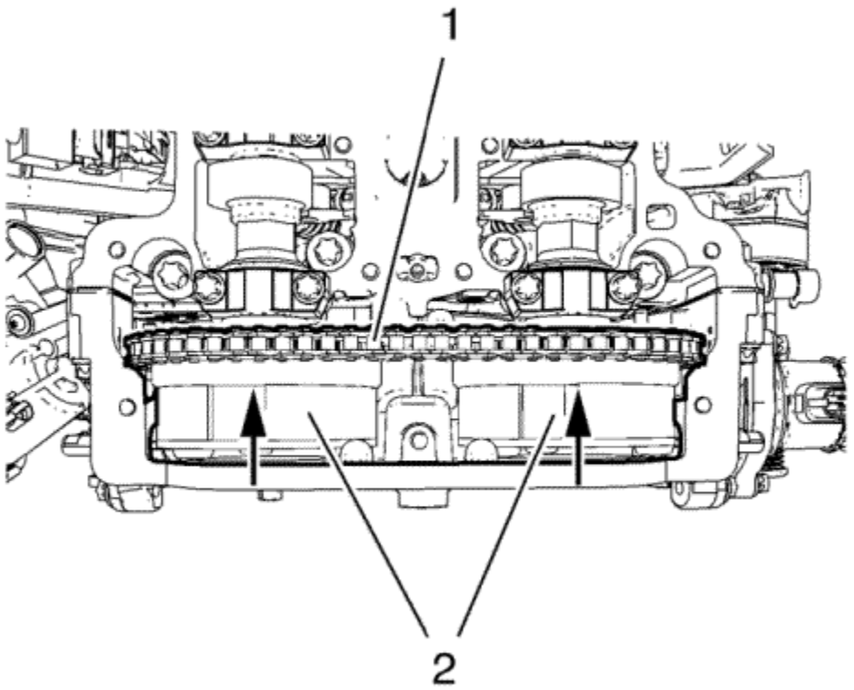

1. Install the camshaft sprockets (2) and timing chain (1) as one unit.

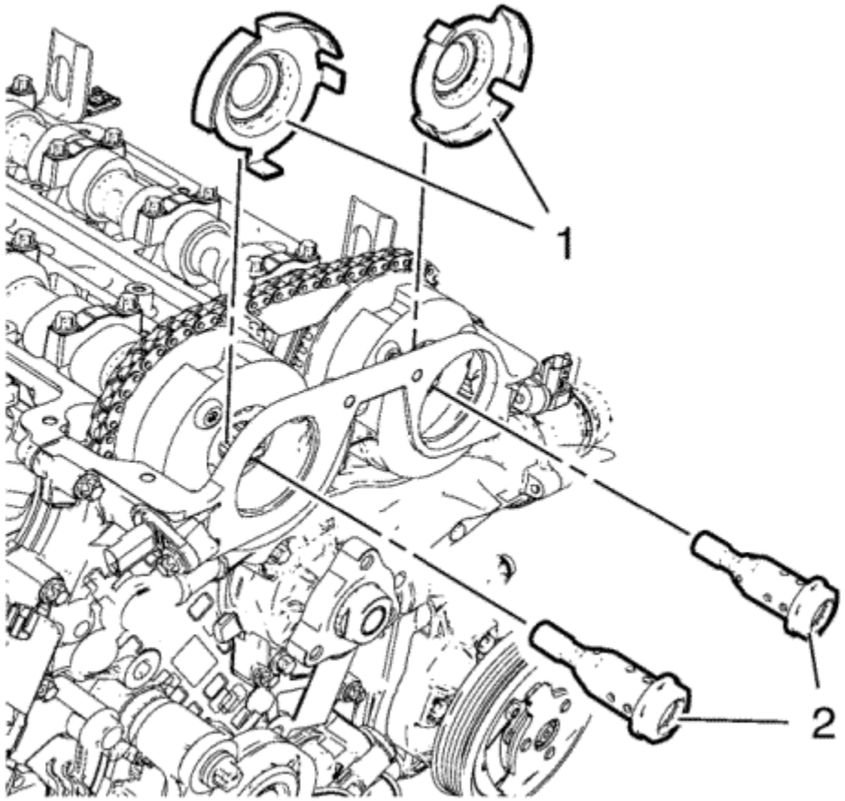

2. Install the camshaft position exciter wheels (1).

   Caution: Refer to Fastener Caution in the Preface section.

3. Install the camshaft sprocket bolts (2) and tighten to **50 N·mplus 45+15 degrees (37 lb ft) plus 45+15 degrees**.
4. Remove the *EN-955-1* pin .
5. Adjust the camshaft timing chain. Refer to Camshaft Timing Chain Adjustment .

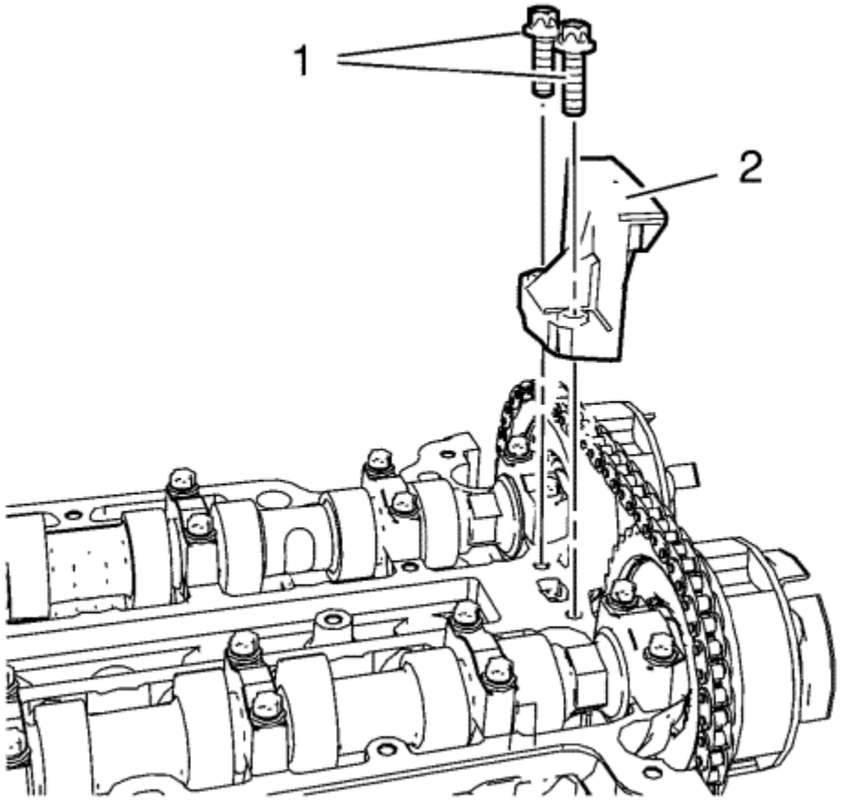

6. Install the upper timing chain guide (2).
7. Install the upper timing chain guide bolts (1) and tighten to **8 N·m (71 lb in)**.

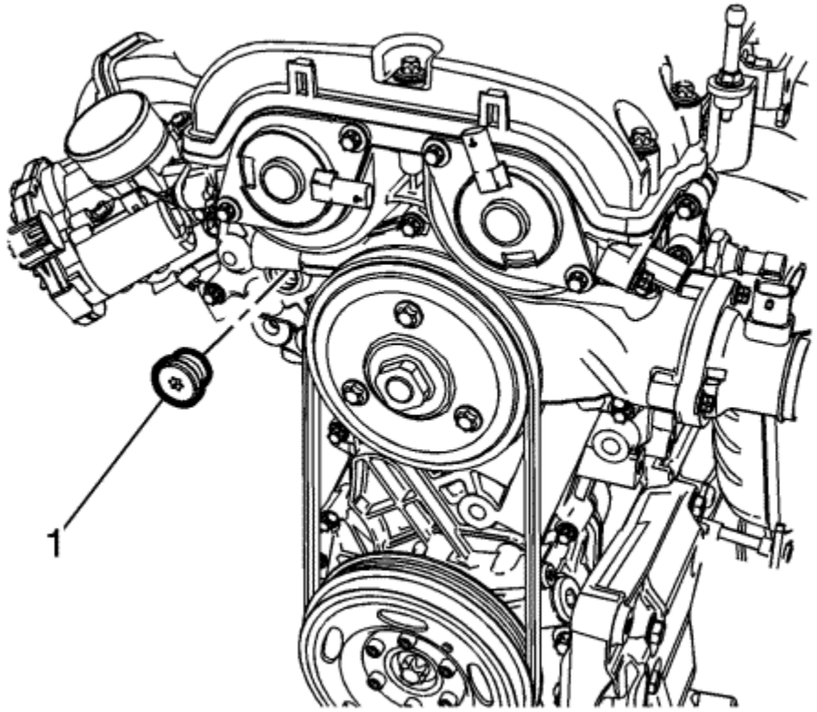

8. Install the timing chain tensioner plug (1) and tighten to **50 N·m (37 lb ft)**.
9. Install both camshaft position actuator solenoid valves. Refer to Camshaft Position Actuator Solenoid Valve Replacement : Exhaust → Intake .

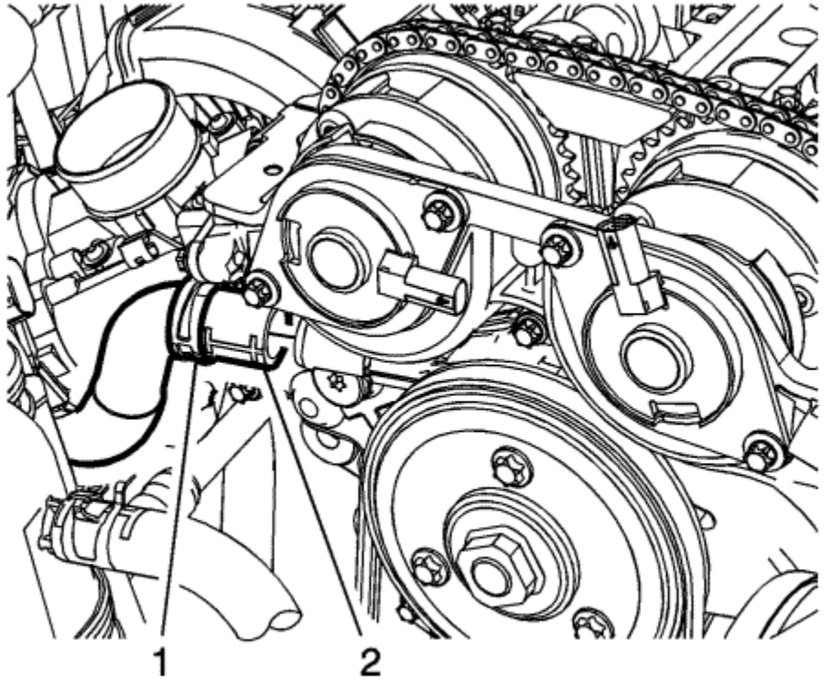

10. Connect the heater water shutoff valve inlet hose (2) to the engine.
11. Install the heater water shutoff valve inlet hose clamp (1).
12. Install the engine mount bracket. Refer to Engine Mount Bracket Replacement - Right Side .
13. Install the camshaft cover. Refer to Camshaft Cover Replacement .
14. Fill the cooling system. Refer to Cooling System Draining and Filling .
15. Enable the high voltage system. Refer to High Voltage Enabling .

&#169© Copyright Chevrolet. All rights reserved

Cylinder Head Replacement

Special Tools

- *EN-470-B* Angular Torque Wrench .
- *EN-955* Fixing Pin .

For equivalent regional tools, refer to Special Tools

Removal Procedure

Danger: Always perform the High Voltage Disabling procedure prior to servicing any High Voltage component or connection. Personal Protection Equipment (PPE) and proper procedures must be followed.

The High Voltage Disabling procedure will perform the following tasks:

- Identify how to disable high voltage.
- Identify how to test for the presence of high voltage.
- Identify condition under which high voltage is always present and personal protection equipment (PPE) and proper procedures must be followed.

Failure to follow the procedures exactly as written may result in serious injury or death.

1. Disable the high voltage system. Refer to High Voltage Disabling
2. Remove the camshaft cover. Refer to Camshaft Cover Replacement
3. Remove the exhaust manifold. Refer to Exhaust Manifold with Catalytic Converter Replacement
4. Remove the Inlet manifold. Refer to Inlet Manifold Replacement
5. Install engine support fixture. Refer to Engine Support Fixture
6. Remove the Water Pump. Refer to Water Pump Replacement
7. Remove the water outlet. Refer to Water Outlet Replacement
8. Remove the Camshaft Position Actuator Solenoid Valve inlet and exhaust. Refer to Camshaft Position Actuator Solenoid Valve Replacement : Exhaust → Intake
9. Remove the Camshaft Position Sensor Exhaust only. Refer to Camshaft Position Sensor Replacement : Intake → Exhaust
10. Adjust the engine to TDC. Refer to Camshaft Timing Chain Inspection

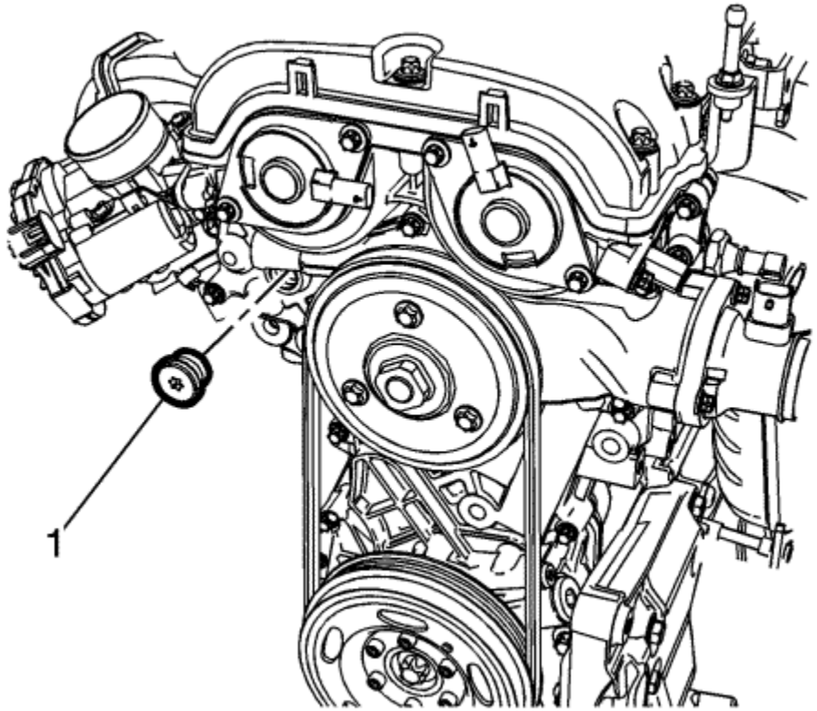

11. Remove the timing chain tensioner plug (1) from the engine front cover.

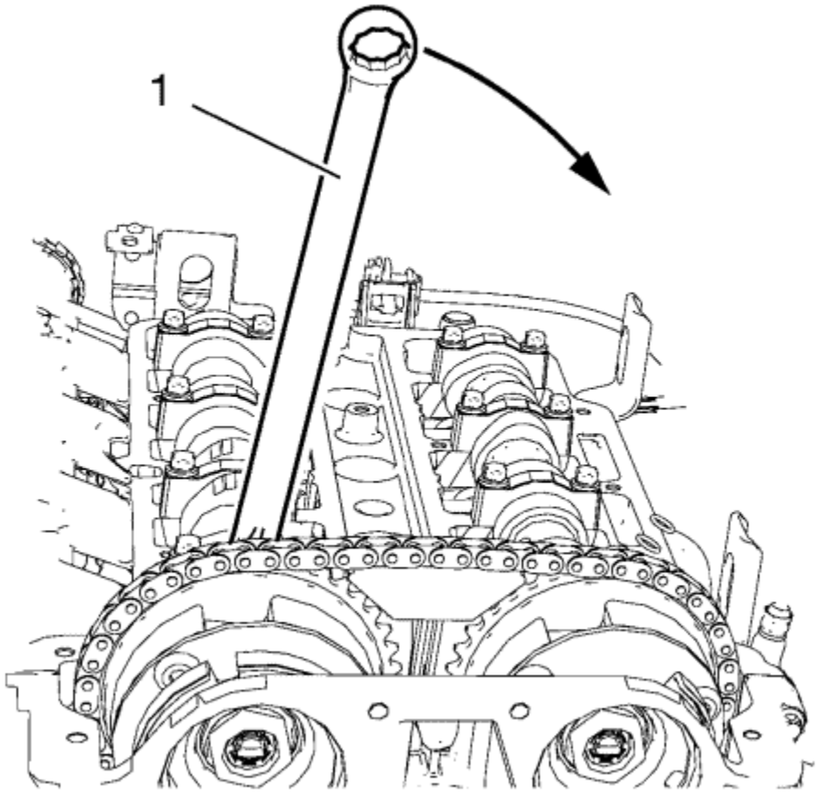

12. Install a wrench (1) on the cast hexagonal portion of the inlet camshaft, rotate the camshaft toward the exhaust camshaft in order to apply tension.

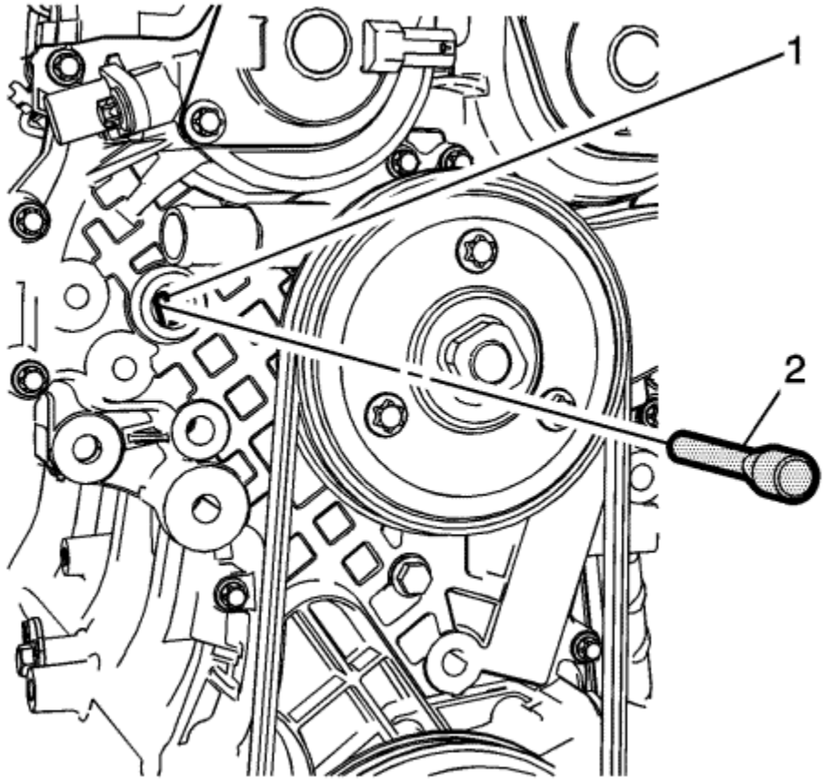

13. Install *EN-955* Locking Pin (2) to the timing chain tensioner bore (1).
14. Remove the wrench from inlet camshaft.

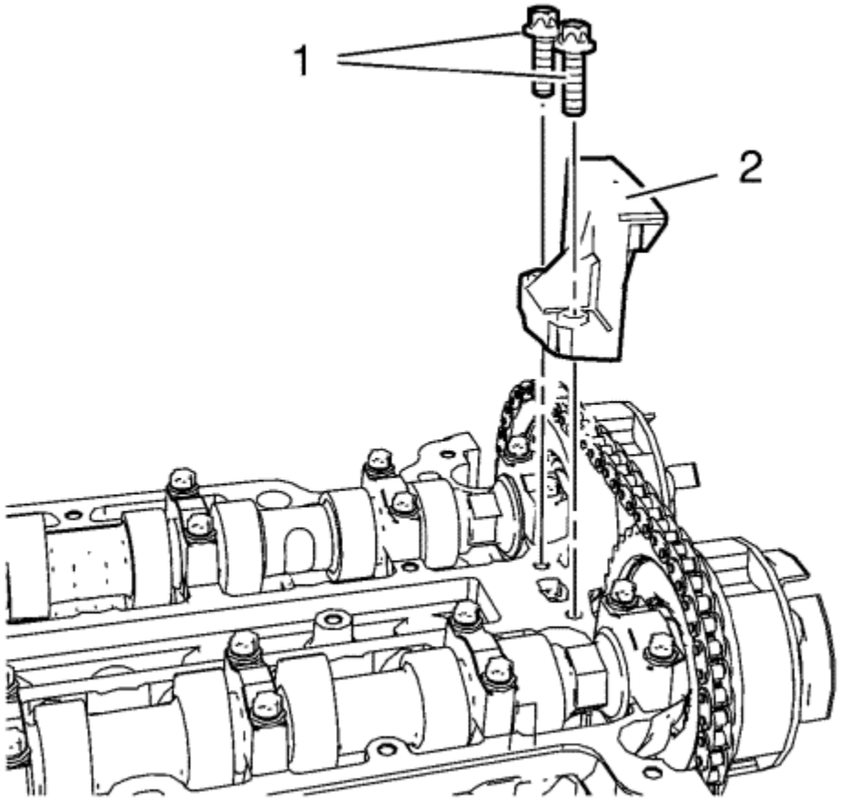

15. Remove the 2 upper timing chain guide bolts (1).
16. Remove the upper timing chain guide (2).

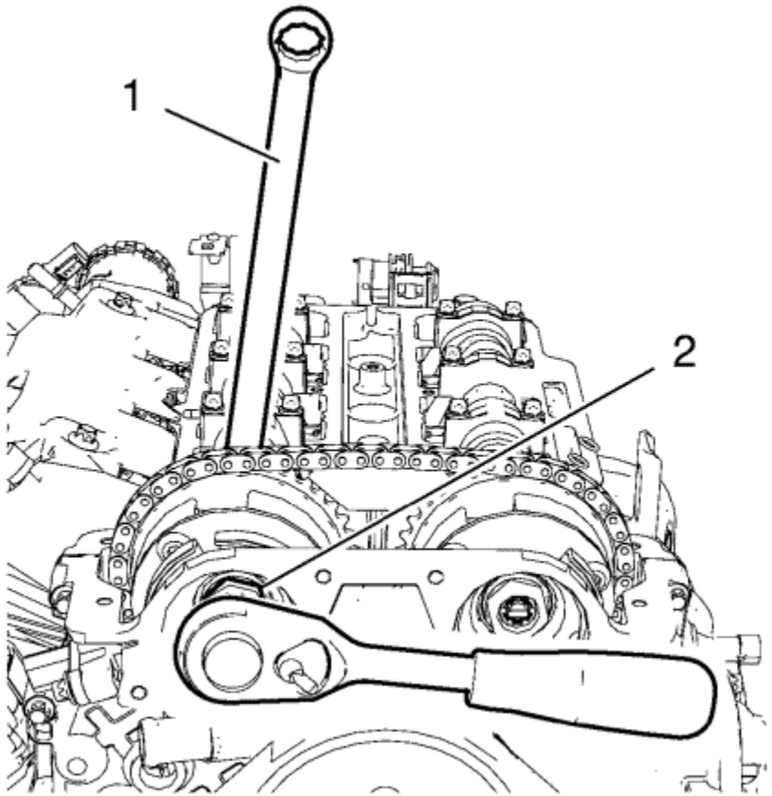

17. Loosen the inlet camshaft sprocket bolt (2) while holding up the hexagon of the inlet camshaft with a wrench (1).
18. Loosen the exhaust camshaft sprocket bolt while holding up the hexagon of the exhaust camshaft with a wrench.

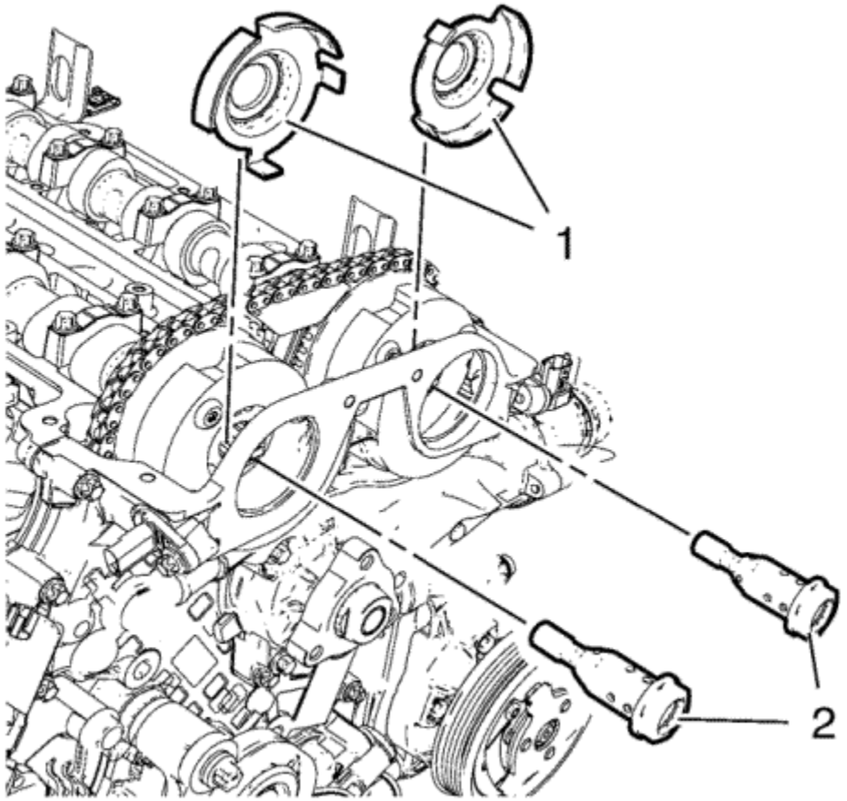

19. Remove the camshaft sprocket bolts (2) and the camshaft position exciter wheels (1).

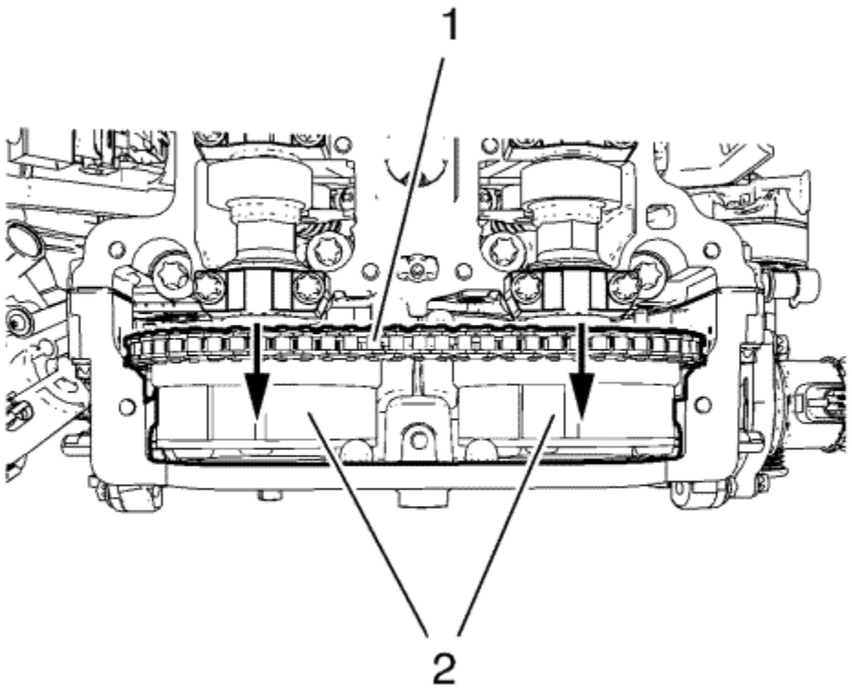

20. Remove the camshaft sprockets (2) and timing chain (1) as one unit.
21. Disconnect electrical connectors as necessary.
22. Reposition electrical harness aside.
23. Allow the camshaft sprockets (2) and timing chain (1) rest on the front cover Do NOT remove sprockets or chain.
24. Place a floor jack with block of wood under the oil sump.
25. Remove engine support fixture. Refer Engine Support Fixture

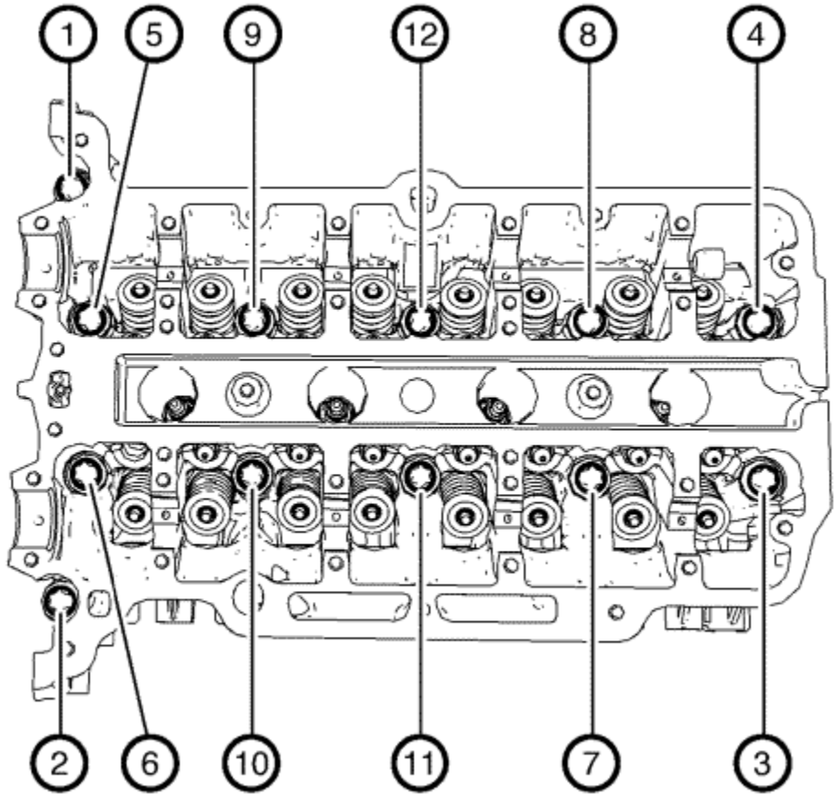

26. Loosen the 12 cylinder head bolts in the sequence as shown above. Use the following procedure:
    - First pass: Loosen the cylinder head bolts 90 degrees.
    - Final pass: Loosen the cylinder head bolts 180 degrees.

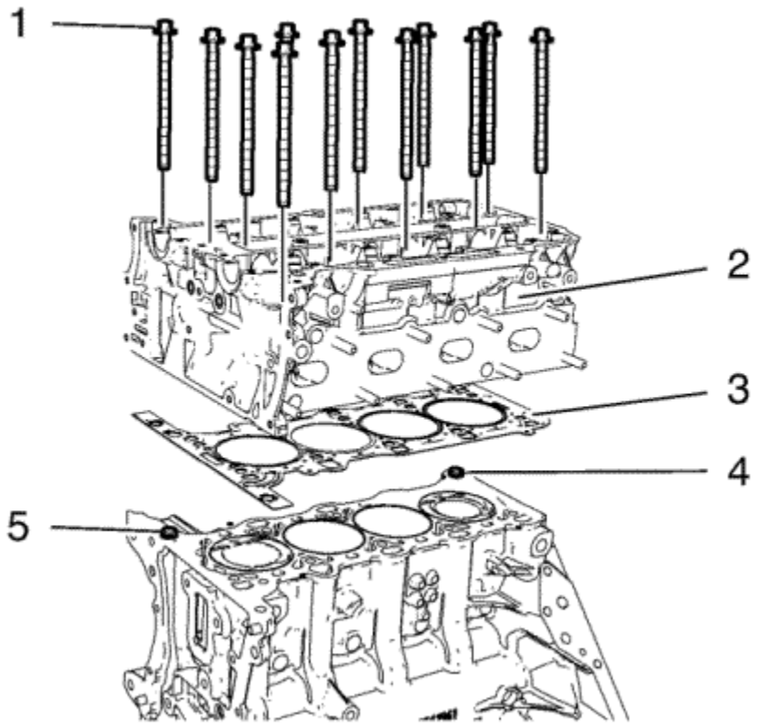

Note: Do not damage the guide sleeves (4) and (5).

27. Remove the cylinder head bolts (1).
28. With the aid of helper, lift the timing chain side of the cylinder head assembly slightly in direction of the transmission.
29. Remove the cylinder head (2).
30. Remove the cylinder head gasket (3) and discard the gasket.

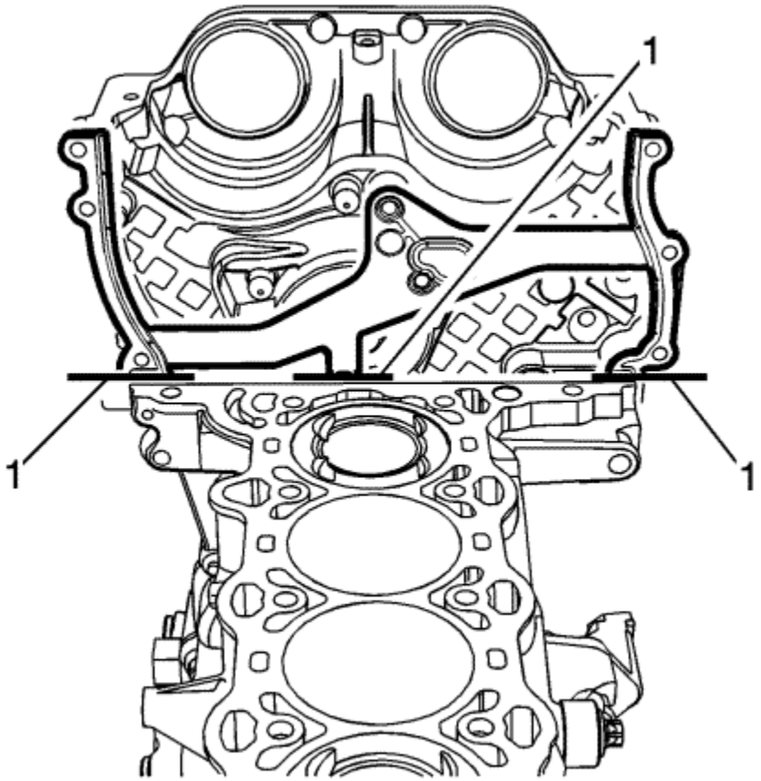

31. With the cylinder head out of vehicle bend the top third of the engine front cover gasket (1) back and forth until snaps off at the breaking point.
32. Transfer parts as necessary.
33. Clean and inspect the cylinder head. Refer to Cylinder Head Cleaning and Inspection
34. For disassembly of the cylinder head. Refer to Cylinder Head Disassemble

Installation Procedure

1. For disassembly of the cylinder head. Refer to Cylinder Head Assemble
2. Clean sealing surfaces of engine front cover and engine block from grease and old gasket material.

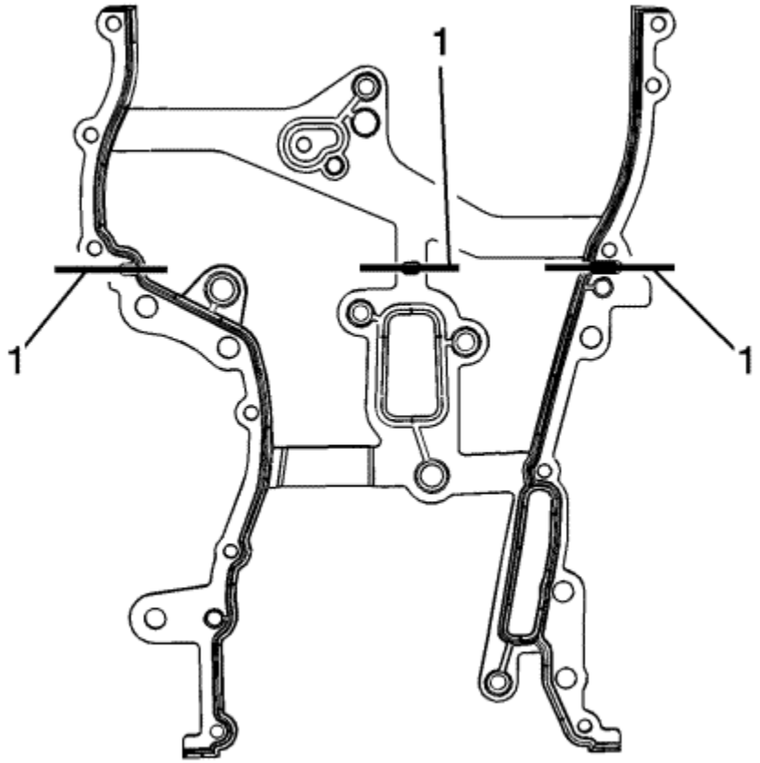

Note: The engine front cover gasket comes as a complete unit.

3. Before installation the of the new front cover gasket, bend the top third of the engine front cover gasket (1) back and forth until snaps off at the breaking point.

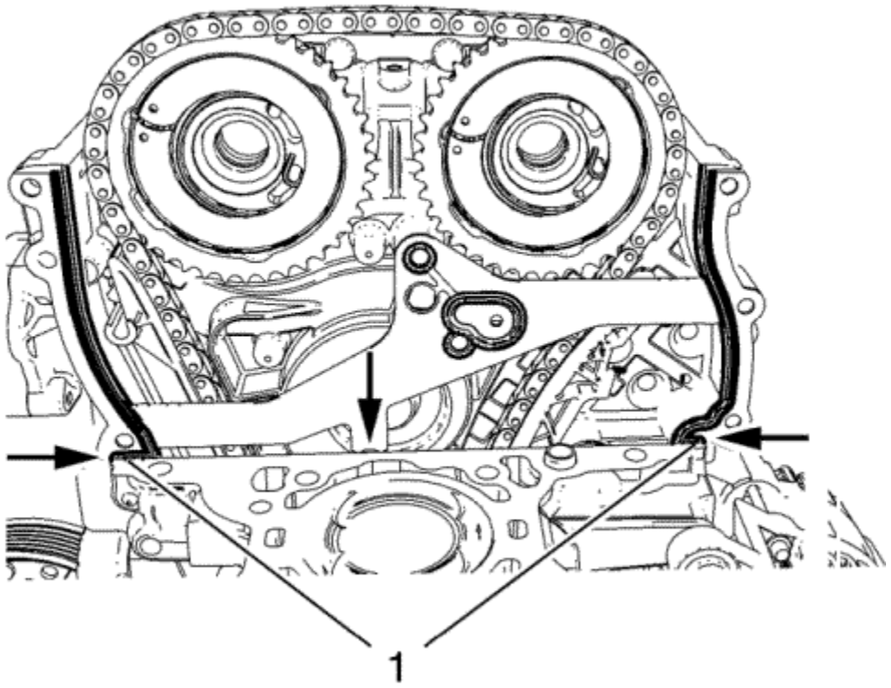

4. Install the engine front cover gasket (1) to ensure for a proper fit and alignment.
5. Clean the surface of the cylinder head and engine front cover.
6. Install the cylinder head gasket to engine block.

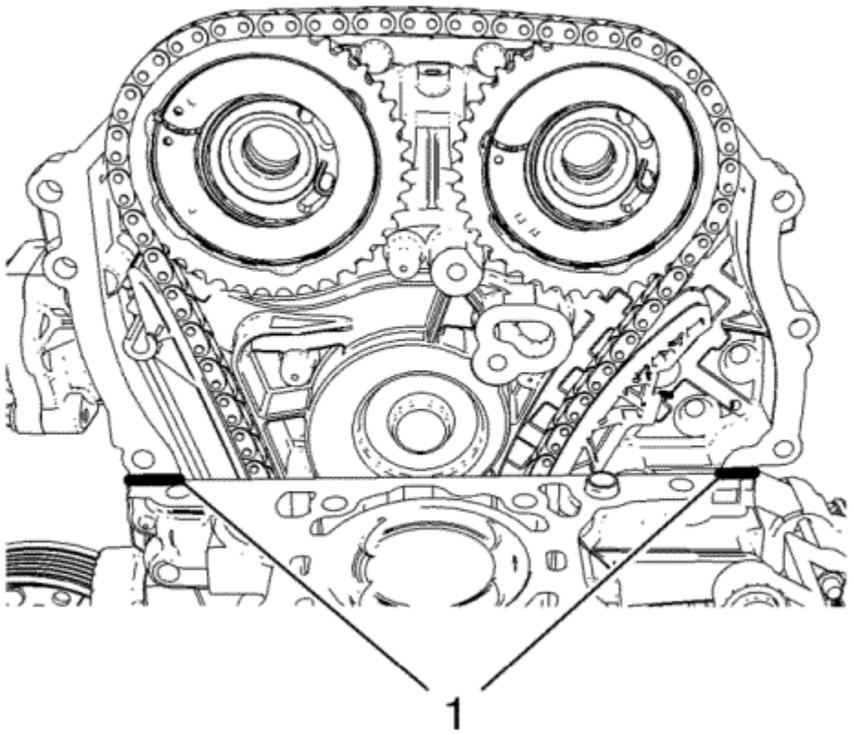

7. Apply a 2 mm (0.0787 in) bead of RTV sealant to the areas shown (1).

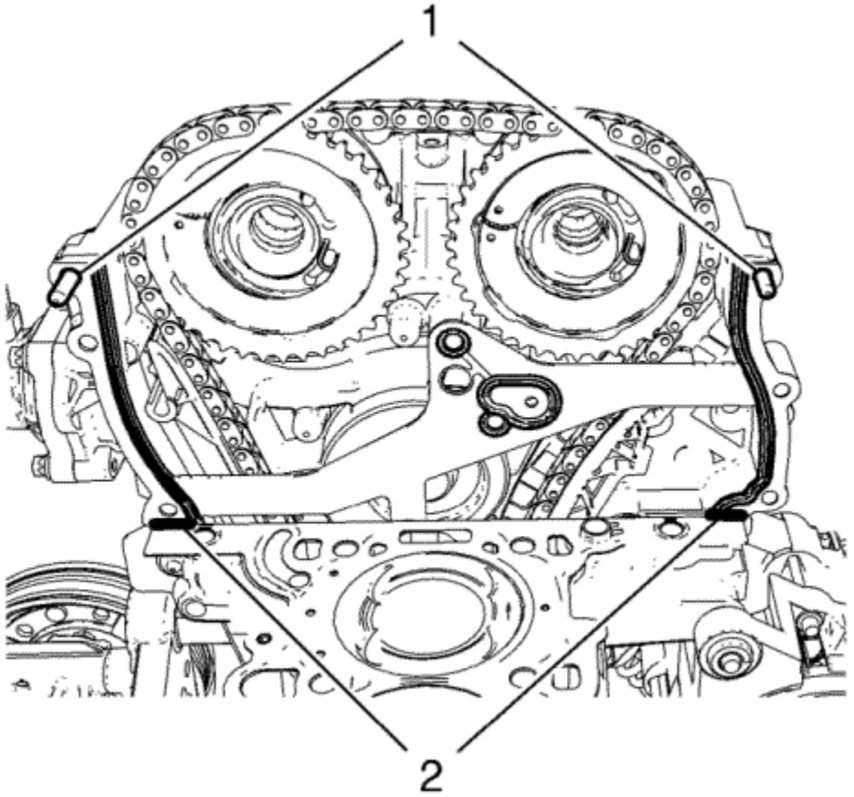

8. Install engine front cover bolts (1) in order to guide the NEW upper engine front cover gasket.
9. Apply a 2 mm (0.0787 in) bead of RTV sealant to the areas shown (2).

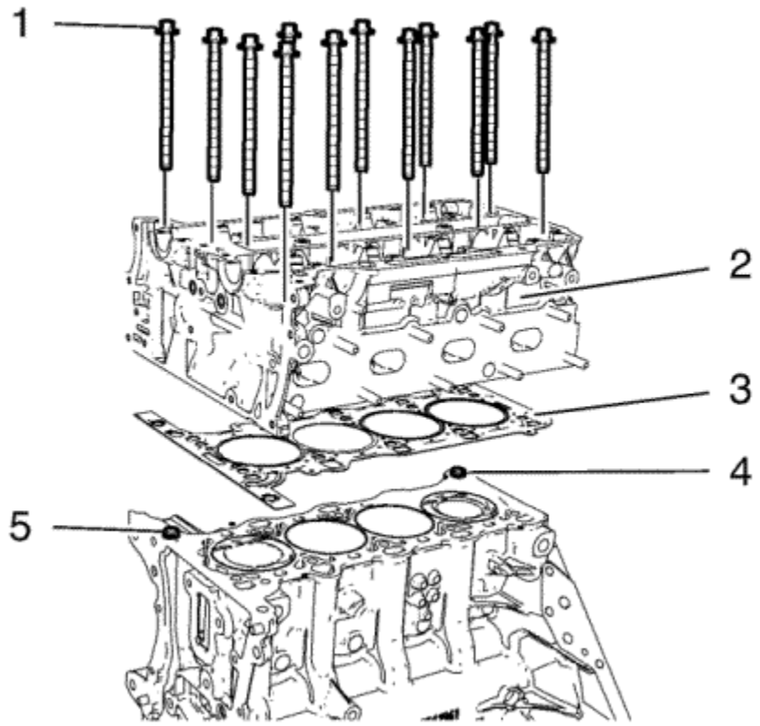

10. Ensure the guide sleeves are in place (4) and (5) before installing the cylinder head.
11. Install a NEW cylinder head gasket (3). The marking "Top" should point to the cylinder head.
12. Install the cylinder head (2).
13. Install the cylinder head bolts (1) and hand tighten only.

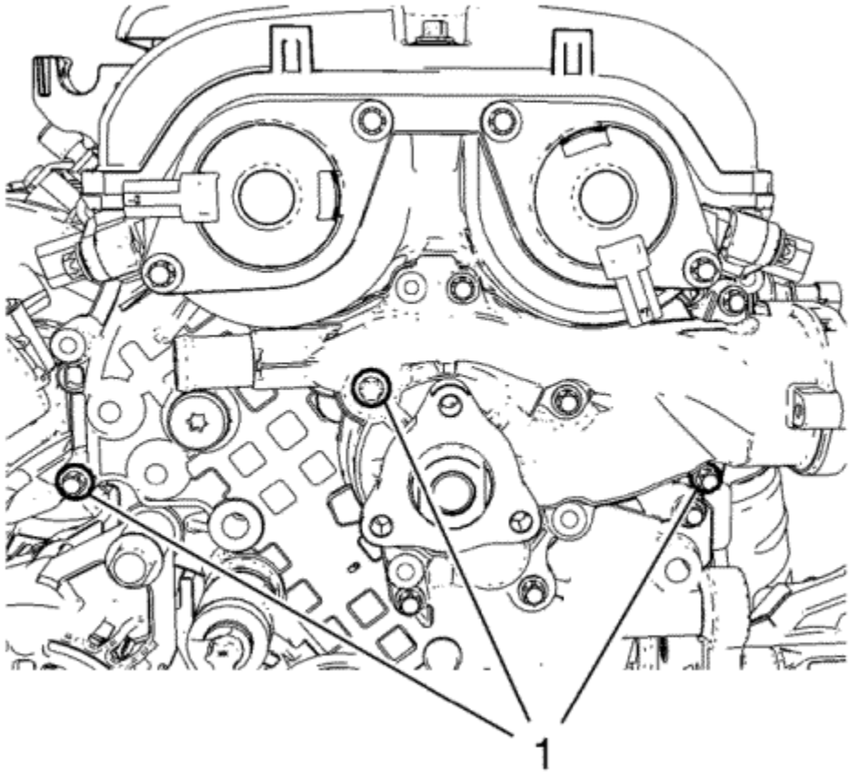

14. Adjust the cylinder head to the engine front cover. Use a rubber mallet.
15. Position the engine front cover to cylinder head by installing 3 bolts (1).

    Caution: Refer to Fastener Caution in the Preface section.

16. Tighten the 3 bolts (1) to **8 N·m (71 lb in)**.

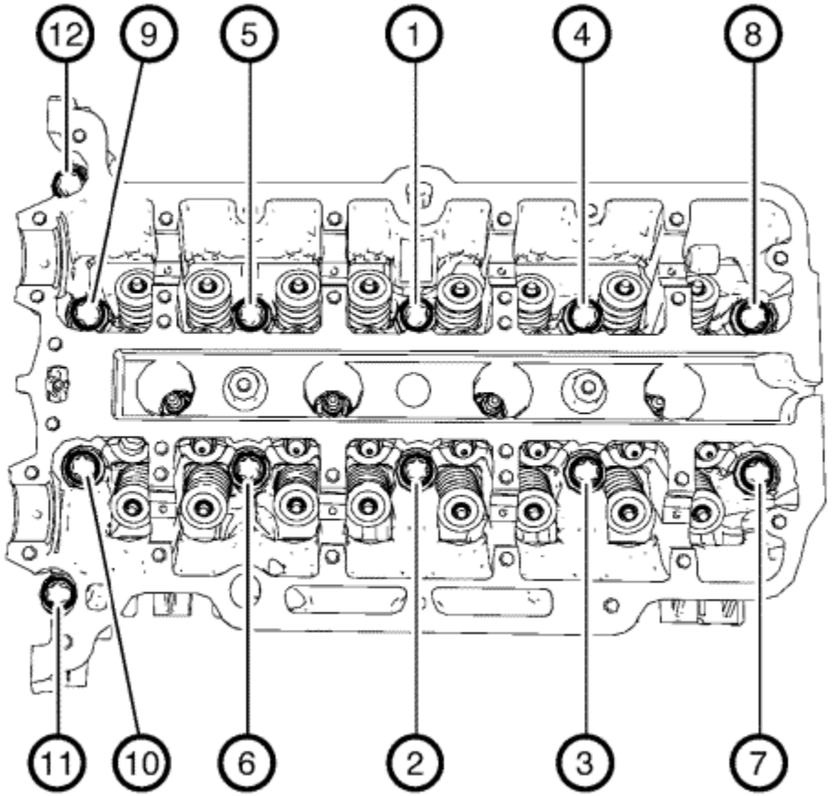

17. Using a *EN-470-B* angular torque wench tighten the cylinder head bolts in the sequence as shown above. Tighten the cylinder head bolts to **25 N·m (18 lb ft) plus 180 degrees**.

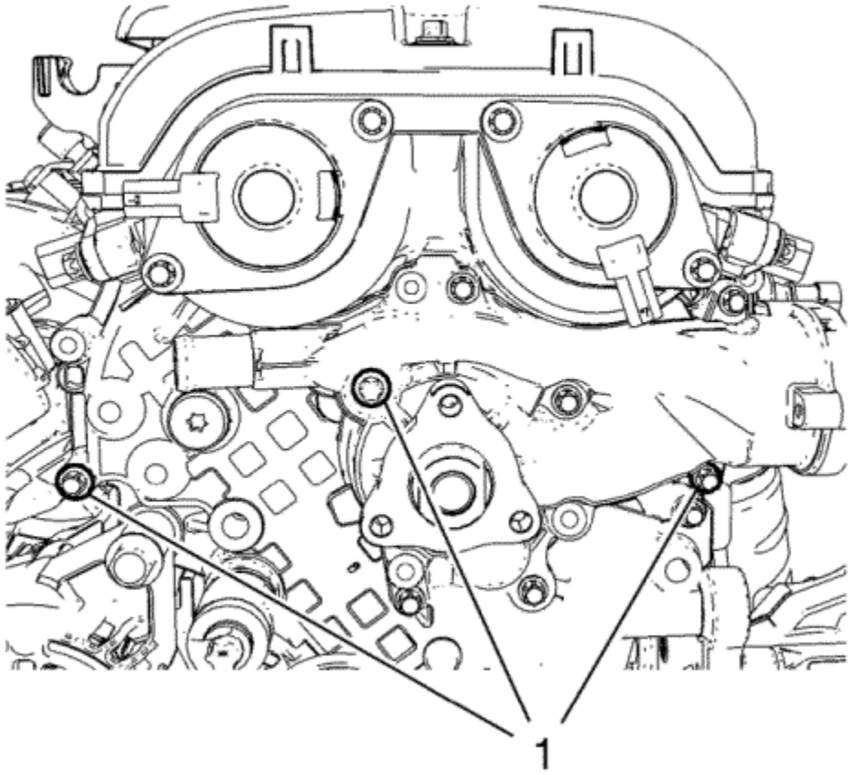

18. Loosen the bolts from engine front cover (1).

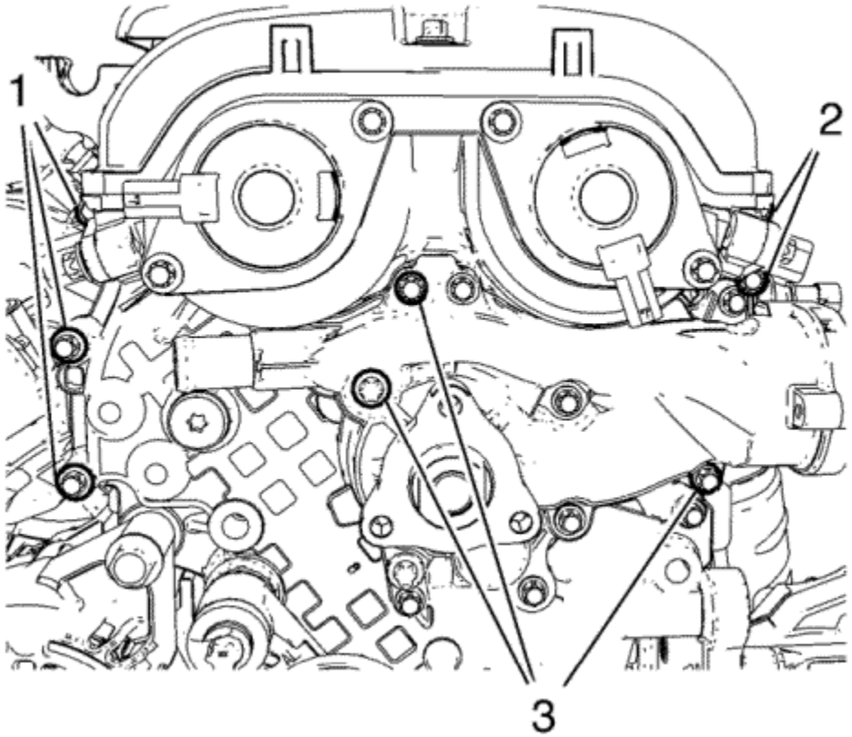

19. Install the remaining bolts to engine front cover and water pump.
20. Tighten the engine front cover bolts (1) and (2) to **8 N·m (71 lb in)**.
21. Tighten the water pump bolts (3) to **8 N·m (71 lb in)**.
22. Install the water pump pulley. Refer to Water Pump Pulley Replacement
23. Install engine mount bracket. Refer to Engine Mount Bracket Replacement - Right Side
24. Install the engine mount. Refer to Engine Mount Replacement - Right Side

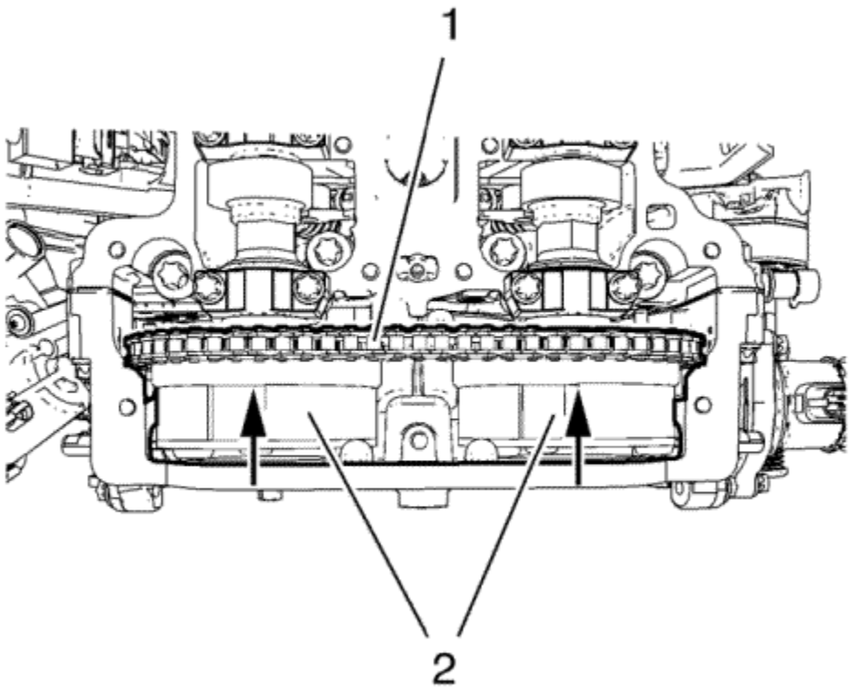

25. Install the camshaft sprockets (2) and timing chain (1) as one unit.

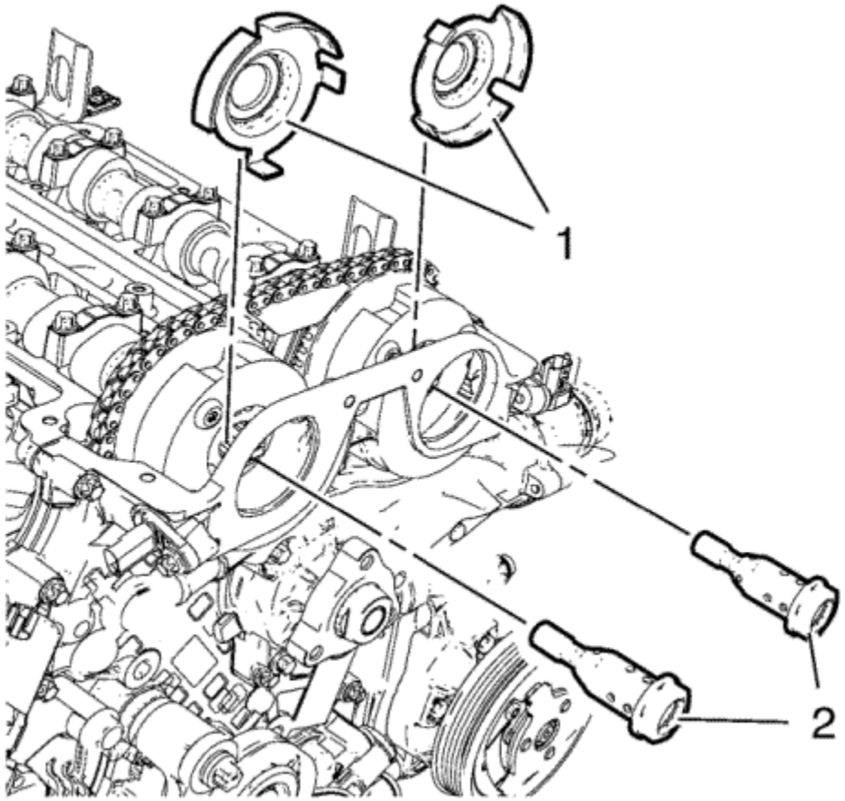

26. Install the camshaft position exciter wheels (1).
27. Install the camshaft sprocket bolts (2) and tighten to **50 N·m (37 lb ft) plus 45 + 15 degrees**.
28. Remove the *EN-955* locking pin .
29. Adjust the camshaft timing chain. Refer to Camshaft Timing Chain Inspection

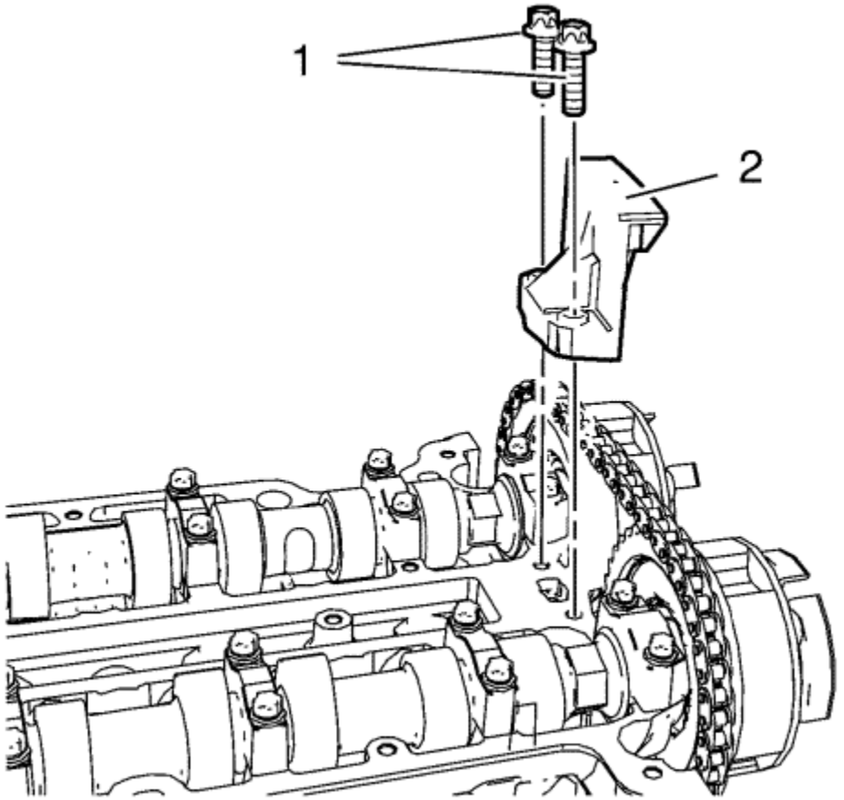

30. Install the upper timing chain guide (2).
31. Install the upper timing chain guide bolts (1) and tighten to **8 N·m (71 lb in)**.

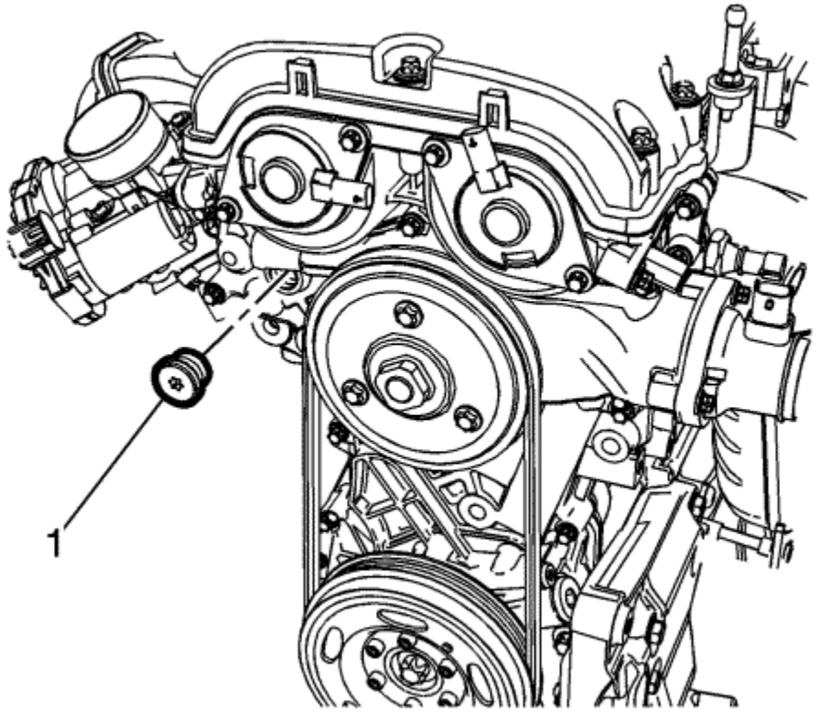

32. Install the timing chain tensioner plug and tighten to **50 N·m (37 lb ft)**.
33. Install the Camshaft Position Actuator Solenoid Valve inlet and exhaust. Refer to Camshaft Position Actuator Solenoid Valve Replacement : Exhaust → Intake
34. Install the Camshaft Position Sensor Exhaust only. Refer to Camshaft Position Sensor Replacement : Intake → Exhaust
35. Install the camshaft cover. Refer to Camshaft Cover Replacement
36. Install the exhaust manifold. Refer to Exhaust Manifold with Catalytic Converter Replacement
37. Install Inlet manifold. Refer to Inlet Manifold Replacement
38. Install the water outlet. Refer to Water Outlet Replacement
39. Fill coolant fluid. Refer to Cooling System Draining and Filling
40. Enable the high voltage system. Refer to High Voltage Enabling
41. Test the vehicle using the following procedure:
    - Crank the engine several times. Listen for any unusual noises or evidence that parts are binding.
    - Start the engine and listen for unusual noises.
    - Check the vehicle oil pressure gauge or light and confirm that the engine has acceptable oil pressure.
    - Run the engine speed at about 1,000 RPM until the engine has reached normal operating temperature.
    - Listen for sticking lifter and other unusual noises.

- Inspect for fuel, oil and/or coolant leaks while the engine is running.

42. Road test the vehicle for normal operation.
43. Inspect for coolant, oil, gas or exhaust leaks.

© Copyright Chevrolet. All rights reserved

Sump Replacement

Special Tools

EN-49980 Guidance Pins

For equivalent regional tools, refer to Special Tools .

Removal Procedure

1. Remove the oil filter and drain the engine oil. Refer to Engine Oil and Oil Filter Replacement .
2. Remove the catylitic converter. Refer to Catalytic Converter Replacement .
3. Remove the heater inlet and outlet pipes. Refer to Heater Inlet And Outlet Pipe Replacement
4. Remove the crankshaft pulley. Refer to Crankshaft Balancer Replacement .

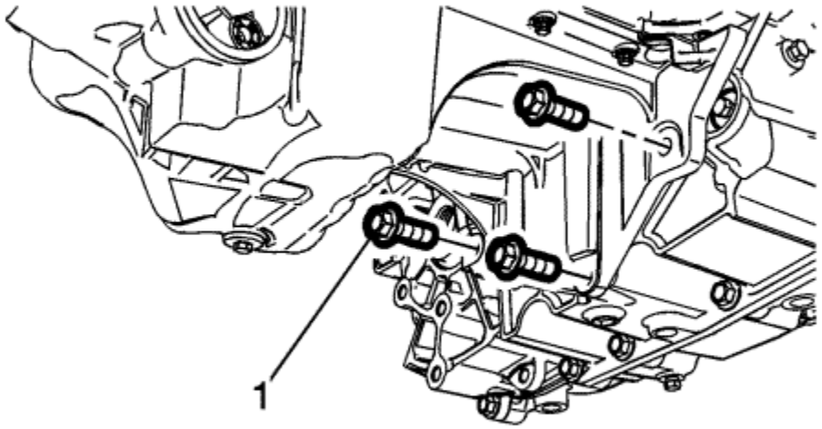

5. Remove the sump to transmission bolts (1).

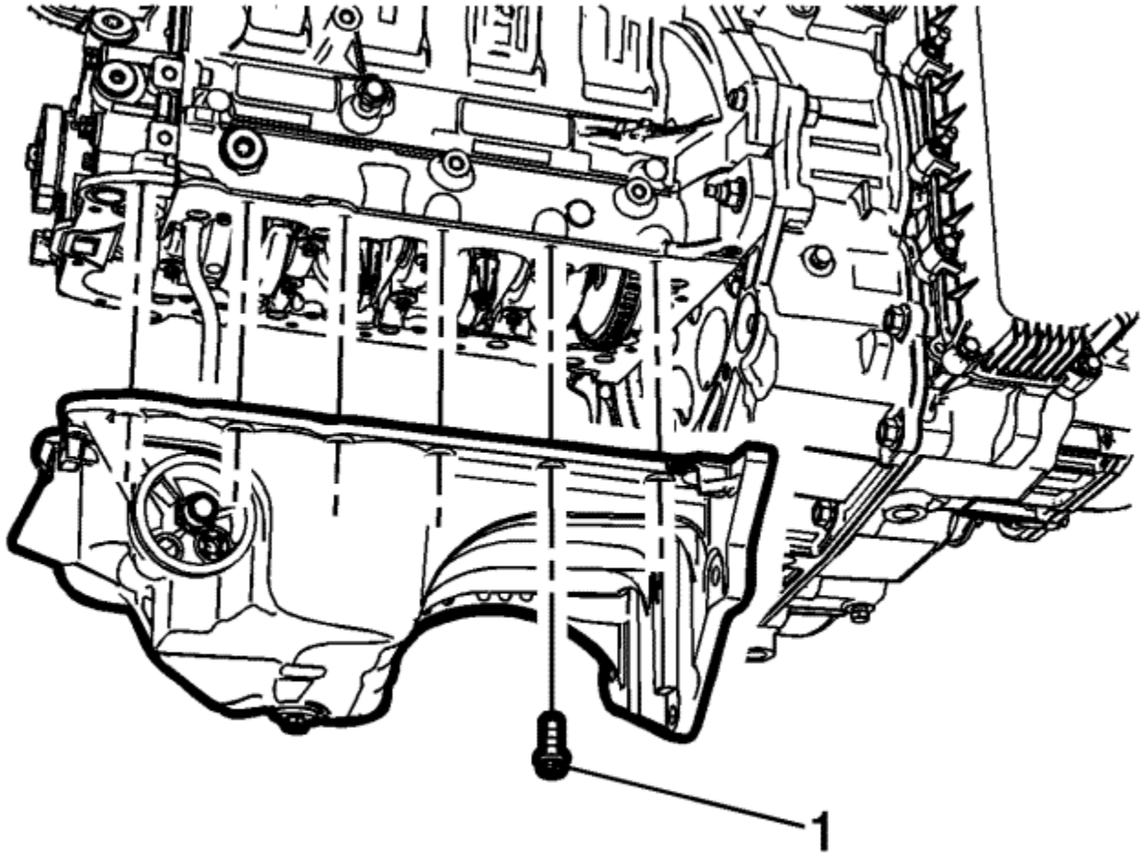

6. Remove the oil sump bolts (1).

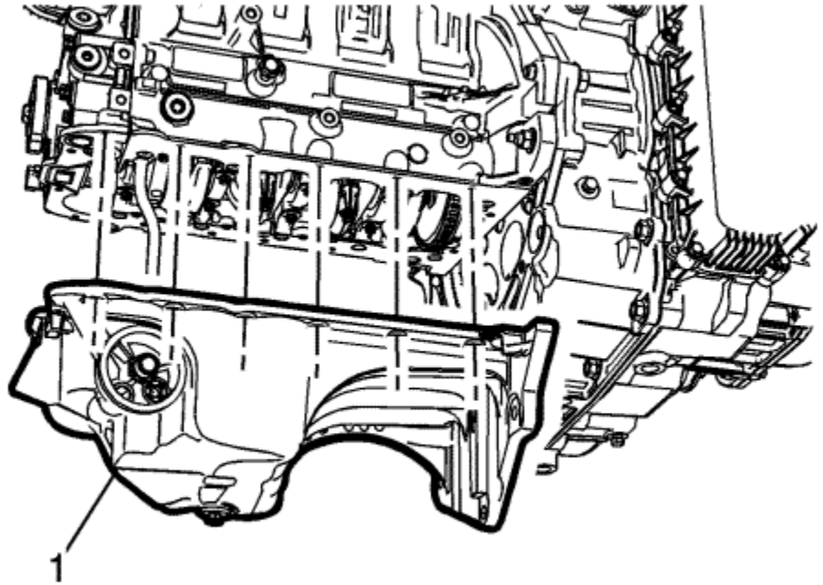

7. Remove the sump.

Installation Procedure

1. Clean the sealing surface of crankshaft bearing cap tie plate and the groove in the engine front cover from old gasket material, oil, dirt and grease.

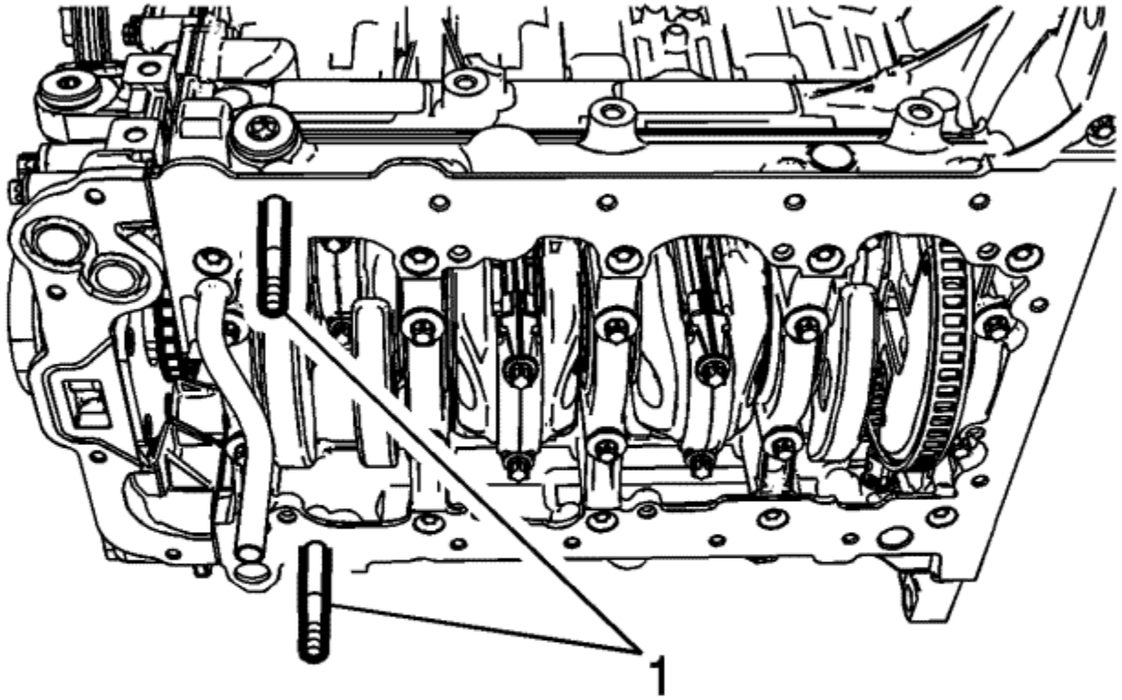

2. Install the 2 *EN-49980* guide pins (1) to the sump screw bores as shown.

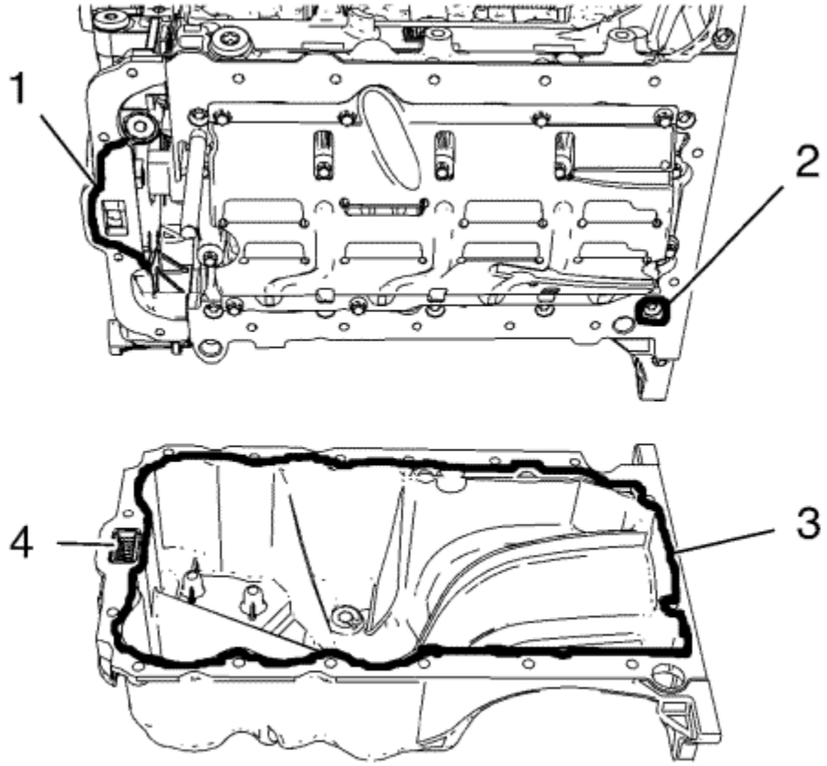

Note: The sealing bead should be applied close to the inner edge of the oil sump. Take care that the oil suction gallery (4) will not get contaminated with sealing compound or dirt.

3. Apply **2 mm (0.0787 in)** thickness of sealing compound (3, 2, 1).

   Caution: Refer to Fastener Caution in the Preface section.

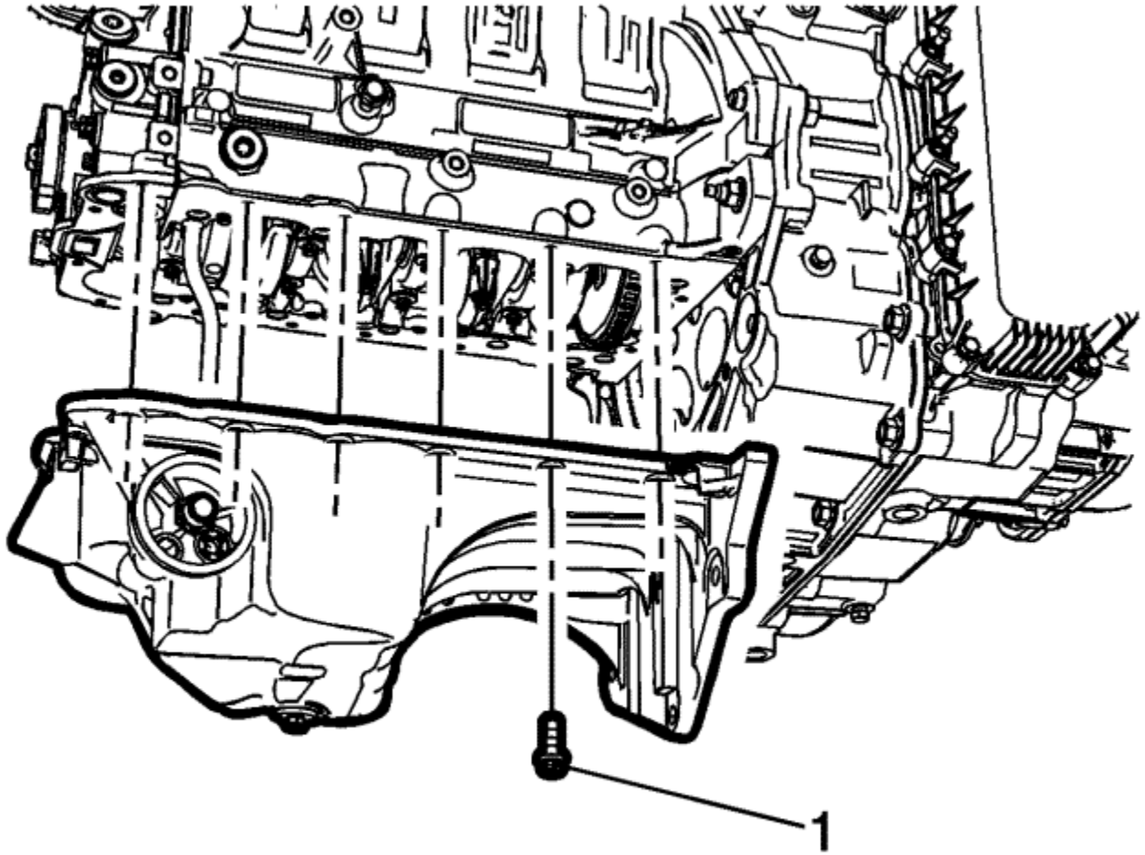

Note: The complete installation procedure of the oil sump should be done in 10 minutes.

4. Loosely install the sump bolts (1) in all but the guide pin locations.
5. Remove the *EN-49980* guide pins and install the remaining sump bolts.
6. Tighten the oil sump bolts to **10 N·m (89 lb in)**.
7. Position the transmission converter cover and hand tighten the cover to transmission bolt.

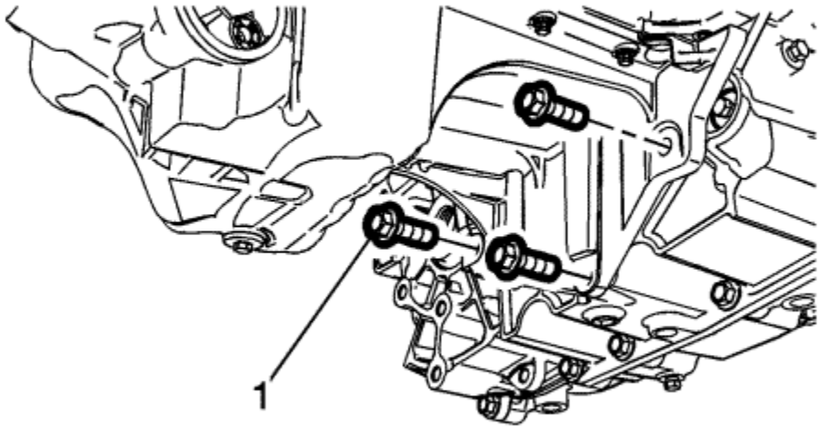

8. Install the sump to transmission bolts (1), and tighten to **40 N·m (30 lb ft)**.
9. Install a NEW oil filter and fill the engine with oil. Refer to Engine Oil and Oil Filter Replacement .
10. Install the catylitic converter. Refer to Catalytic Converter Replacement .
11. Install the crankshaft pulley. Refer to Crankshaft Balancer Replacement .
12. Install the heater inlet and outlet pipes, and refill the coolant system. Refer to Heater Inlet And Outlet Pipe Replacement

© Copyright Chevrolet. All rights reserved

Automatic Transmission Flex Plate Replacement

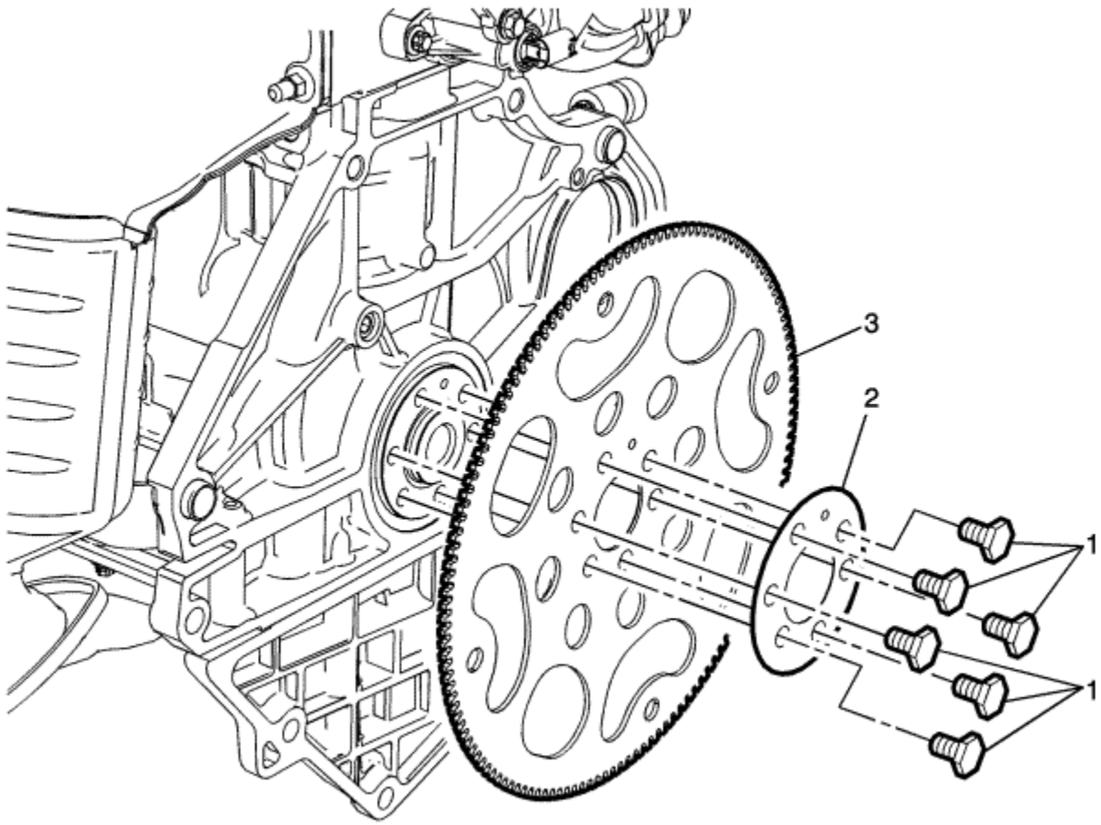

Callout	Component Name
Preliminary Procedure	
Remove the transmission. Refer to Transmission Replacement .	
Special Tools	

- *EN-470-B* Angular Torque Wrench
- *EN-956-1* Extension
- *EN-49979* Crankshaft Shock Mount Retainer

For equivalent regional tools, refer to Special Tools .

1	Automatic Transmission Flex Plate Fastener (Qty: 6) **Caution:** Refer to Fastener Caution in the Preface section. **Tighten** • 35 N·m (26 lb ft) • Tighten the bolt an additional 30 degrees, and one more pass at 15 degrees using *EN-470-B* wrench .
2	Flex Plate
3	Automatic Transmission Flex Plate **Procedure** Inspect the engine flywheel for the following: 1. Stress cracks around the engine flywheel 2. Cracks at welded areas that retain the ring gear onto the engine flywheel 3. Damaged or missing ring gear teeth 4. Do not attempt to repair the welded areas that retain the ring gear to the engine flywheel plate. Install a new engine flywheel.

&#169© Copyright Chevrolet. All rights reserved

Crankshaft Balancer Replacement

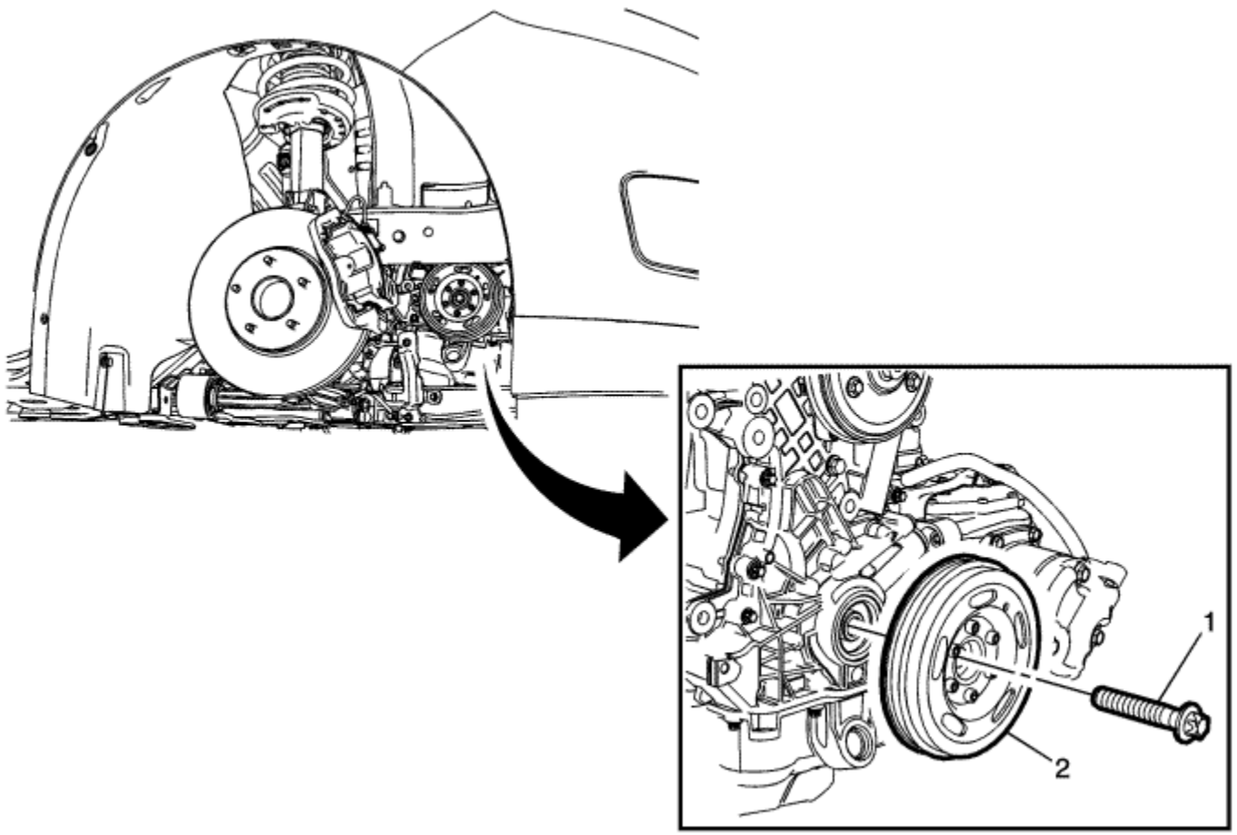

Callout	Component Name
Preliminary Procedures	

1. Mark the balancer to the cover relationship or Set to TDC.
2. Remove the water pump belt. Refer to Water Pump Belt Replacement .
3. Remove the heater water auxiliary pump. Refer to Heater Water Auxiliary Pump Replacement

4. Remove the drive motor battery coolant cooler Inlet hose assembly. Refer to Drive Motor Battery Coolant Cooler Inlet Hose Assembly Replacement

1	Crankshaft Pulley Fastener **Caution:** Refer to Fastener Caution in the Preface section. **Tighten** • 150 N·m (111 lb ft) • Tighten the bolt an additional 60 degrees.
2	Crankshaft Pulley **Procedure** 1. Use *EN-49979* retainer and *EN-956-1* extension to remove the crankshaft pulley. 2. To ensure correct installation of the crankshaft pulley, measure the distance between the pulley and the front cover. Refer to Crankshaft Balancer Installation . **Special Tools** • *EN-470-B* Angular Torque Wrench • *EN-956-1* Extension • *EN-49979* Crankshaft Shock Mount Retainer For equivalent regional tools, refer to Special Tools .

&#169© Copyright Chevrolet. All rights reserved

Crankshaft Front Oil Seal Replacement

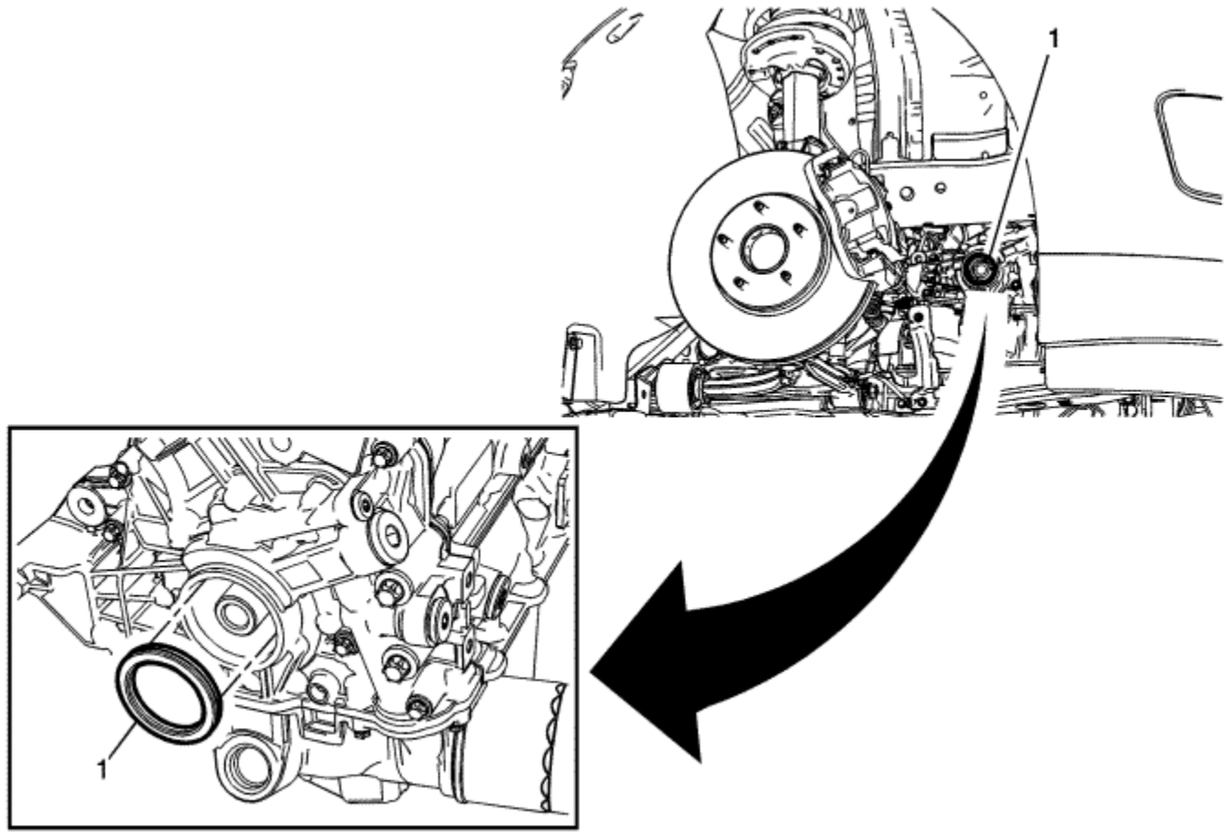

Callout	Component Name
Preliminary Procedure Remove the crankshaft balancer. Refer to Crankshaft Balancer Replacement .	
	Camshaft Front Oil Seal

1	**Procedure** 1. Using a flat-bladed tool, remove the crankshaft front oil seal. 2. Use *EN-960* installer to install the new crankshaft front oil seal. **Special Tools** *EN-960* Crankshaft Front Oil Seal Installer For equivalent regional tools, refer to Special Tools .

© Copyright Chevrolet. All rights reserved

Crankshaft Rear Oil Seal Replacement

Special Tools

EN-658 Rear Main Seal Installer

For equivalent regional tools, refer to Special Tools .

Removal Procedure

1. Remove the automatic transmission flex plate. Refer to Automatic Transmission Flex Plate Replacement .

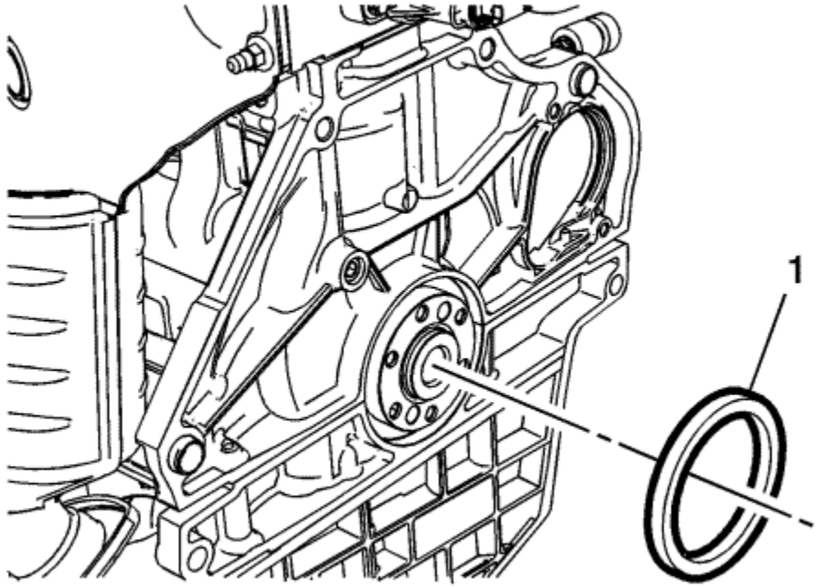

Note: Do not damage the outside diameter of the crankshaft or chamber with any tool.

2. Using a flat-bladed tool, remove the rear crankshaft oil seal (1).

Installation Procedure

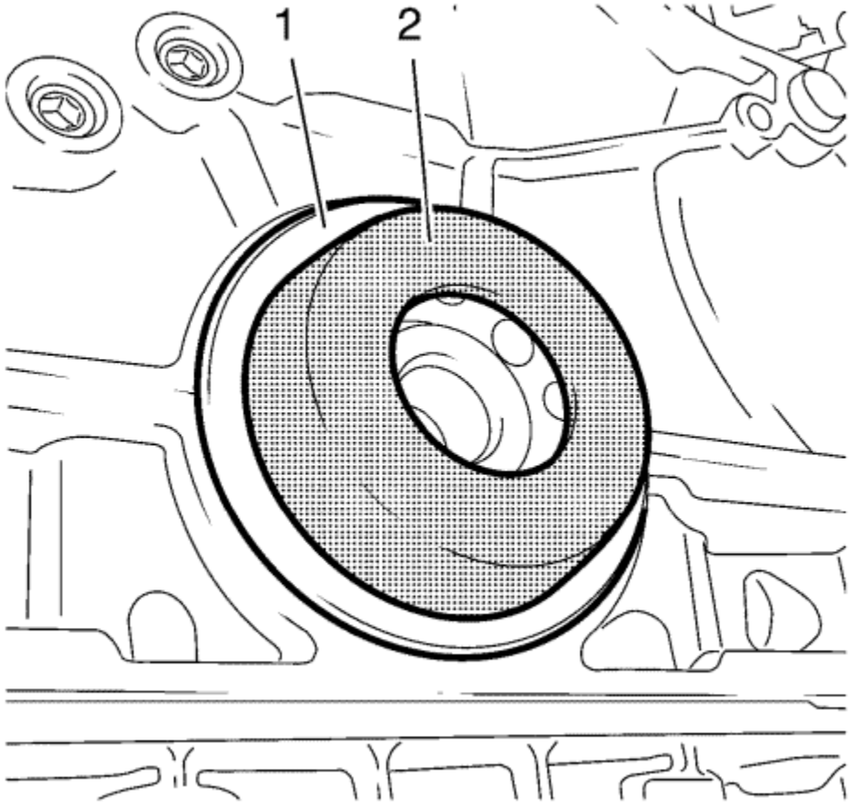

1. Install the crankshaft rear oil seal (1) with *EN-658* installer (2).

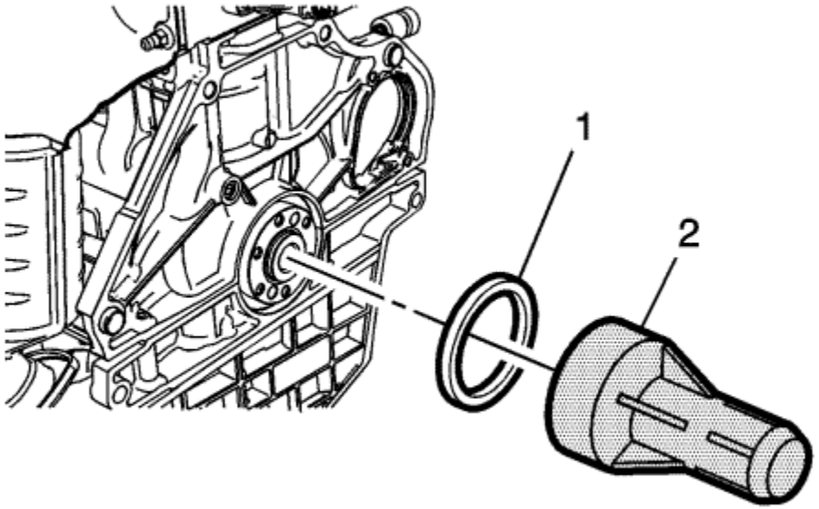

2. Using the *EN-658* installer (2) , install a NEW crankshaft real oil seal (1).
3. Install the automatic transmission flex plate. Refer to Automatic Transmission Flex Plate Replacement .

© Copyright Chevrolet. All rights reserved

Engine Front Cover with Oil Pump Replacement

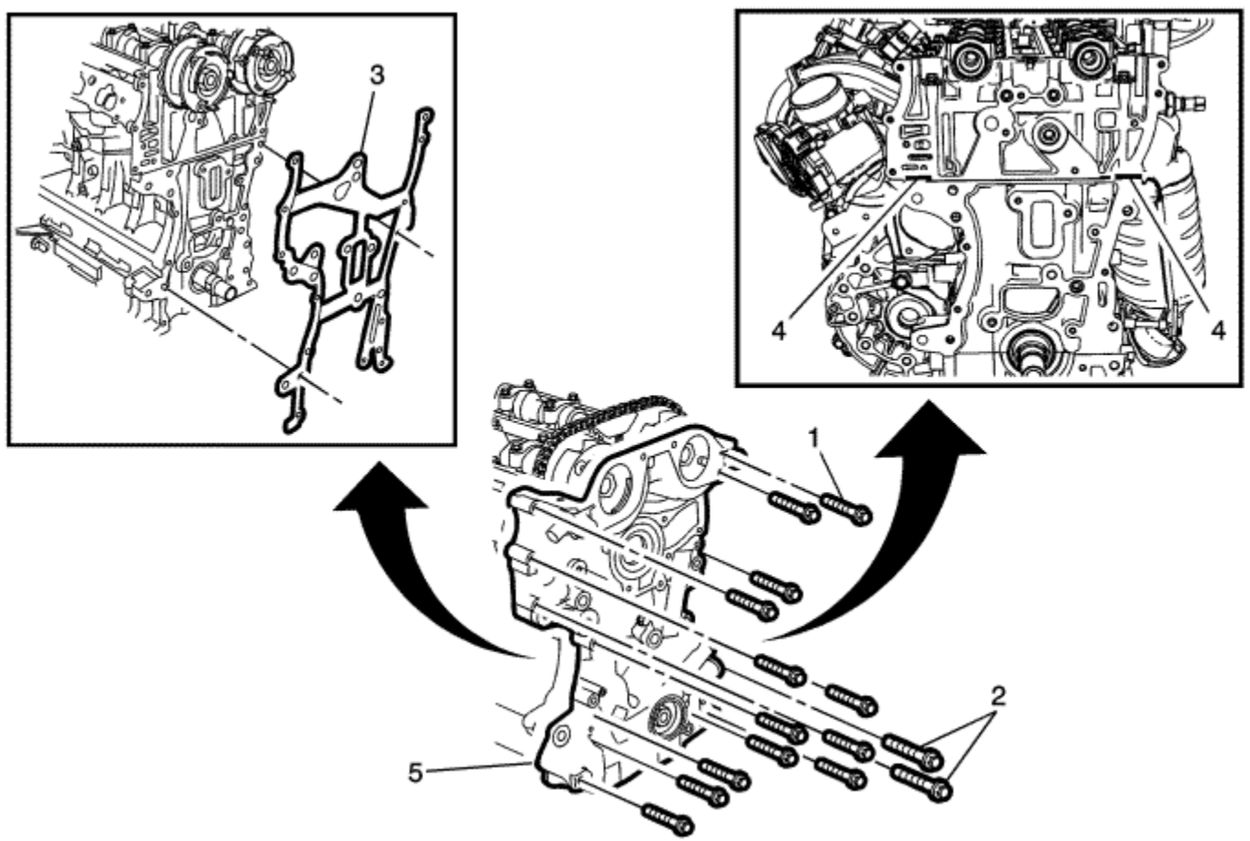

Callout	Component Name
Preliminary Procedures	

1. Remove the camshaft cover. Refer to Camshaft Cover Replacement .
2. Remove both camshaft position actuator solenoid valves. Refer to Camshaft Position Actuator Solenoid Valve Replacement : Exhaust → Intake .
3. Remove the air cleaner assembly. Refer to Air Cleaner Assembly Replacement .

4. Set the crankshaft to TDC. Refer to Camshaft Timing Chain Inspection
5. Install the engine support fixture. Refer to Engine Support Fixture .
6. Remove the water pump pulley and the water pump. Refer to Water Pump Replacement .
7. Remove the sump. Refer to Sump Replacement .

1	Engine Front Cover with Oil Pump Fastener (Qty: 13) **Caution:** Refer to Fastener Caution in the Preface section. **Procedure** Ensure to mark the location of each bolt. **Tighten** 8 N·m (71 lb in)
2	Engine Front Cover with Oil Pump Fastener (Qty: 2) **Tighten** 35 N·m (26 lb ft)
3	Engine Front Cover with Oil Pump Gasket **Procedure** 1. Remove the camshaft timing chain out of the way before removing the engine front cover gasket. Refer to Camshaft Timing Chain Replacement . 2. Replace the engine front cover gasket whenever the cover is removed. 3. Adjust timing chain on installation. Refer to Camshaft Timing Chain Adjustment **Tip** Removal of timing chain is necessary to get access to engine front cover gasket.
4	Engine Front Cover RTV Sealant **Procedure** Apply a 2 mm (0.0787 in) bead of RTV sealant to the areas shown (3).
5	Engine Front Cover with Oil Pump **Procedure** 1. To disassemble oil pump, refer to Engine Front Cover and Oil Pump Disassemble . 2. For cleaning and inspection of the oil pump, refer to Engine Front Cover and Oil Pump Cleaning and Inspection .

3. Reposition coolant hoses as necessary.
4. Disconnect electrical connector as necessary.
5. Transfer components as necessary.

© Copyright Chevrolet. All rights reserved

Engine Oil Pressure Indicator Switch Replacement

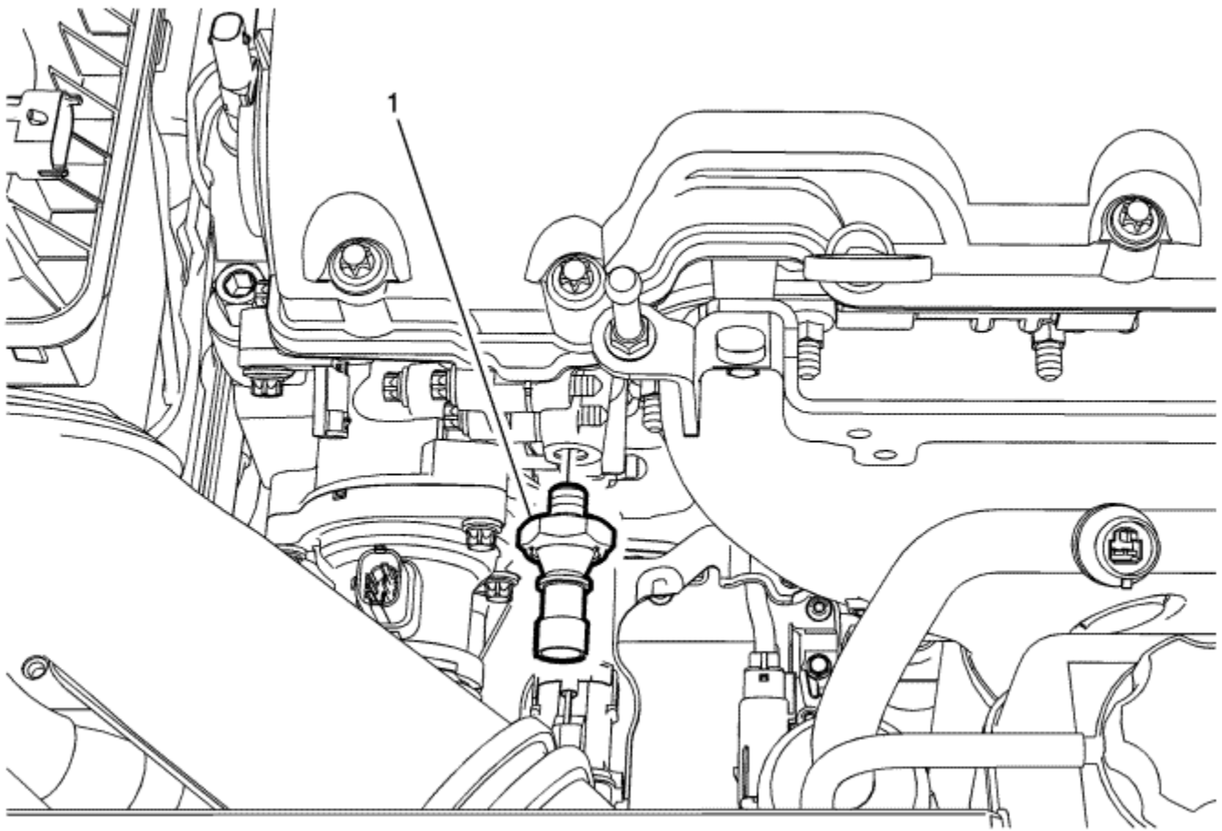

Callout	Component Name
Preliminary Procedure **Remove the air cleaner resonator outlet duct.Refer to Air Cleaner Resonator Outlet Duct Replacement**	
	Engine Oil Pressure Sensor and/or Switch

1	**Caution:** Refer to Component Fastener Tightening Caution in the Preface section. **Procedure** 1. Disconnect the oil pressure sensor electrical connector. 2. Transfer components as necessary. **Tighten** 20 N·m (15 lb ft)

© Copyright Chevrolet. All rights reserved

Engine Replacement

Special Tools

- *CH-904* Base Frame
- *CH-49289* Centring Frame
- *EN-470-B* Angle Meter
- *EN-6015* Closure Plugs
- *EN-49290* Engine Support Tool

For equivalent regional tools, refer to Special Tools .

Removal Procedure

Danger: Always perform the High Voltage Disabling procedure prior to servicing any High Voltage component or connection. Personal Protection Equipment (PPE) and proper procedures must be followed.

The High Voltage Disabling procedure will perform the following tasks:

- Identify how to disable high voltage.
- Identify how to test for the presence of high voltage.
- Identify condition under which high voltage is always present and personal protection equipment (PPE) and proper procedures must be followed.

Failure to follow the procedures exactly as written may result in serious injury or death.

1. Disable the high voltage system. Refer to High Voltage Disabling .
2. Disconnect the intermediate steering shaft from the steering gear. Refer to Intermediate Steering Shaft Replacement .

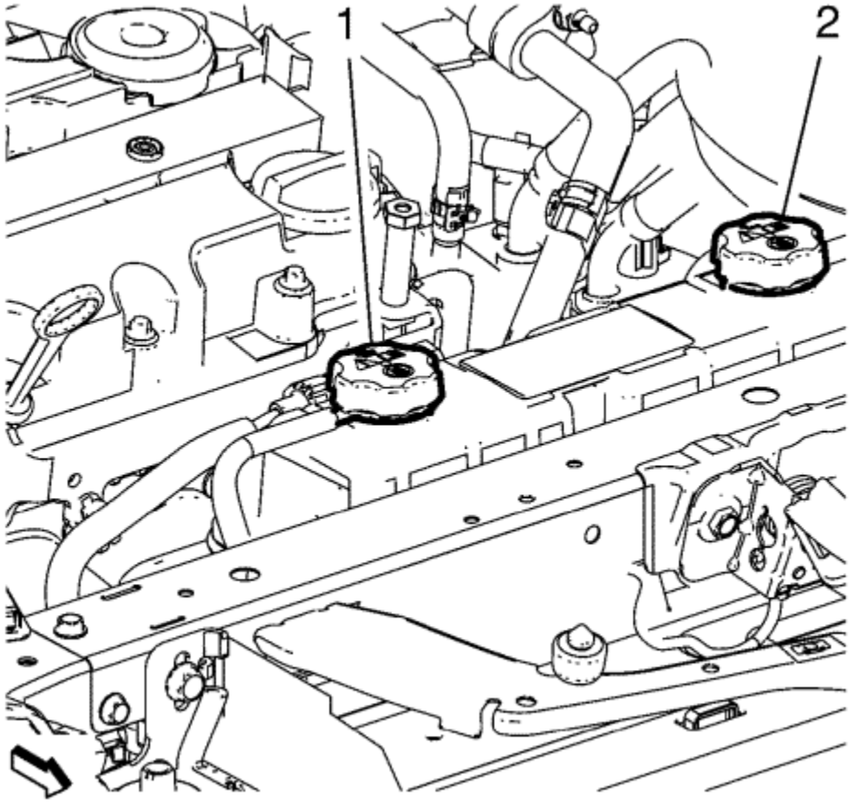

Warning: To avoid being burned, do not remove the radiator cap or surge tank cap while the engine is hot. The cooling system will release scalding fluid and steam under pressure if radiator cap or surge tank cap is removed while the engine and radiator are still hot.

3. Open the drive motor battery coolant reservoir cap (1).
4. Open the drive motor generator power inverter module coolant reservoir cap (2).
5. Remove both front wheelhouse liners. Refer to Front Wheelhouse Front Liner Replacement .
6. Remove the front bumper fascia. Refer to Front Bumper Fascia Removal and Installation : Volt → Ampera .
7. Place a basin underneath.

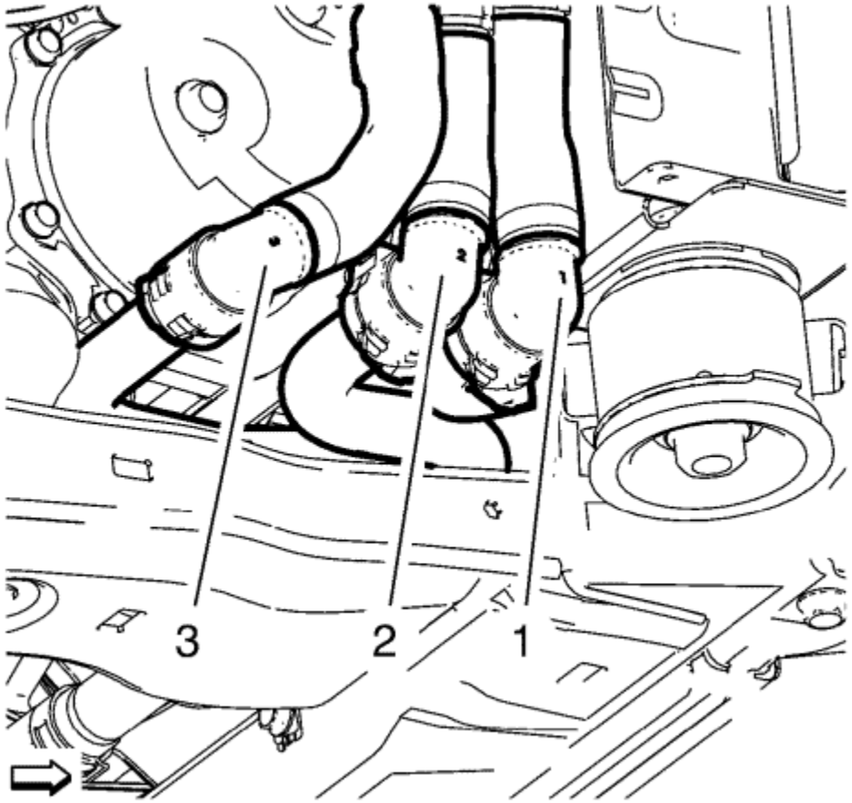

8. Disconnect the drive motor battery radiator inlet pipe connector (1).
9. Disconnect the drive motor battery coolant cooler outlet pipe connector (2).
10. Disconnect the drive motor battery coolant cooler inlet pipe connector (3).

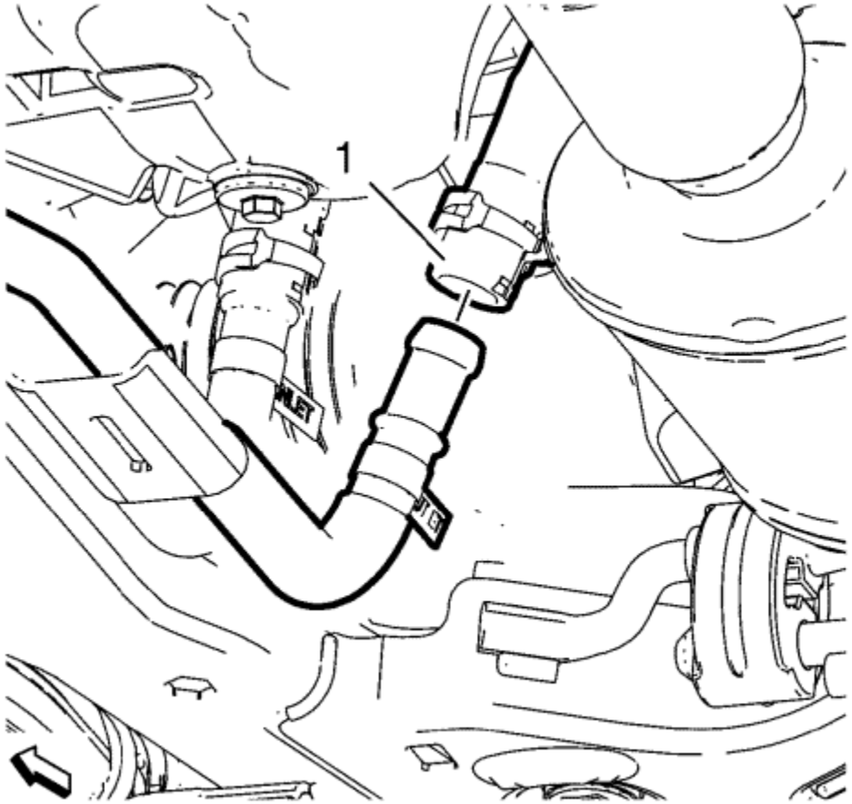

11. Disconnect the heater water shutoff valve outlet hose (1).

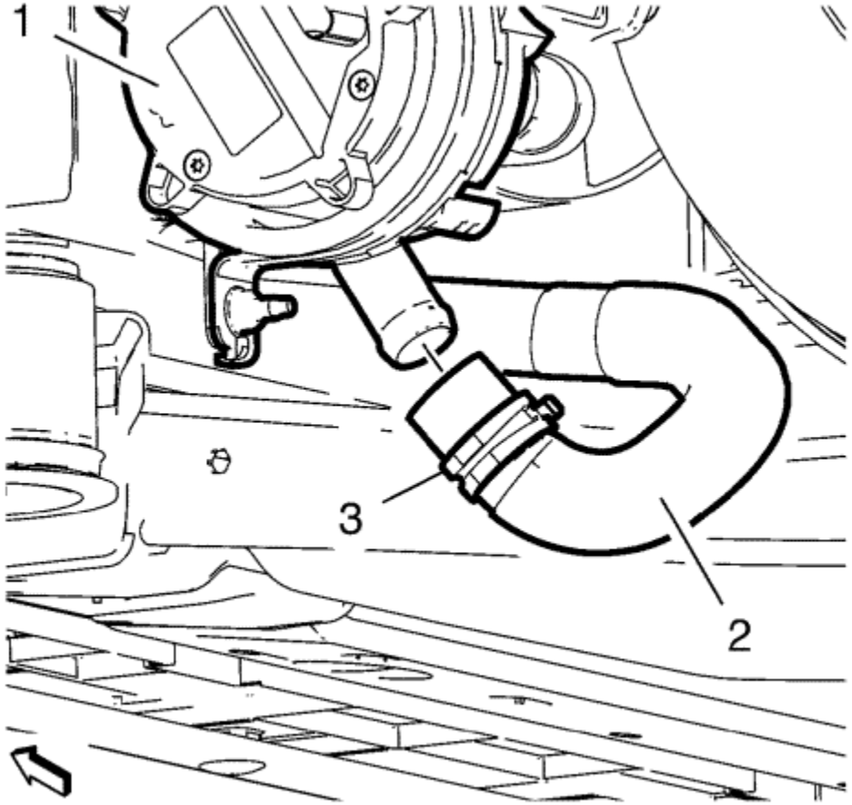

12. Remove the clamp (3) and disconnect the drive motor power inverter module cooling outlet hose (2) from the drive motor power inverter module cooling pump (1).
13. Drain the engine cooling system. Refer to Cooling System Draining and Filling .
14. Recover the air conditioning refrigerant. Refer to Refrigerant Recovery and Recharging : High Voltage Electric Compressor .
15. Remove the drive motor generator power inverter module. Refer to Drive Motor Generator Power Inverter Module Replacement .
16. Remove the air cleaner assembly. Refer to Air Cleaner Assembly Replacement .
17. Remove the air cleaner resonator outlet duct. Refer to Air Cleaner Resonator Outlet Duct Replacement .

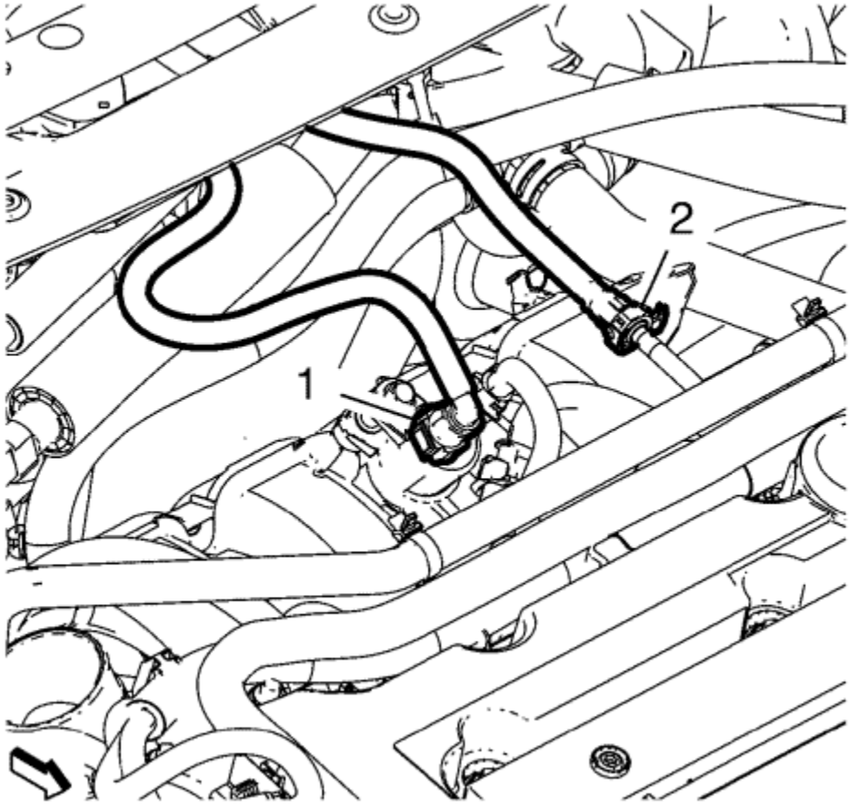

18. Disconnect the canister purge pipe (1) from the canister purge valve. Refer to Plastic Collar Quick Connect Fitting Service .
19. Plug the connections with the *EN-6015* plugs .
20. Disconnect the fuel feed pipe (2) from the fuel rail assembly. Refer to Plastic Collar Quick Connect Fitting Service .
21. Plug the connections with the *EN-6015* plugs .

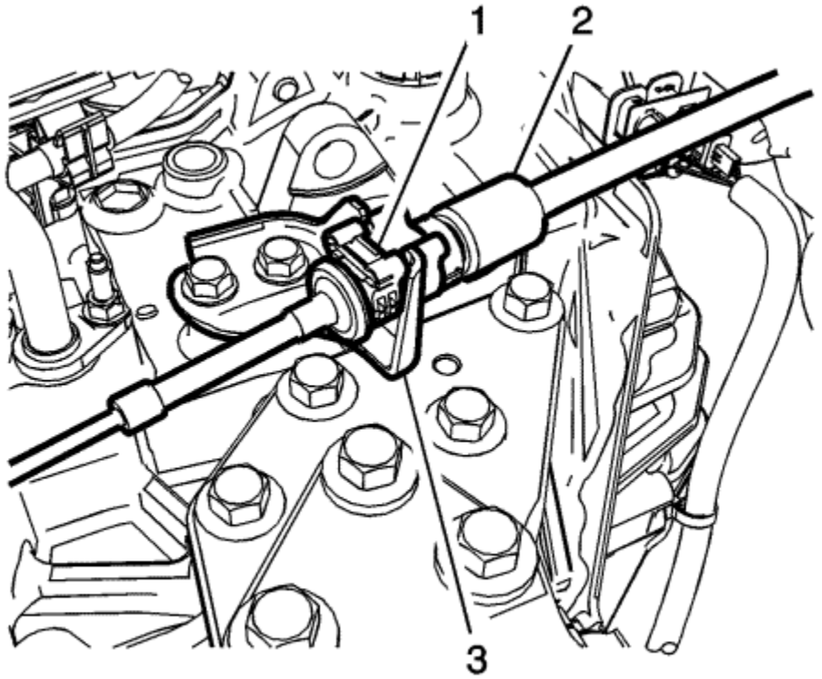

22. Press the locking tab (1) rearward in order to release the transmission range selector lever cable (2) from the cable bracket.

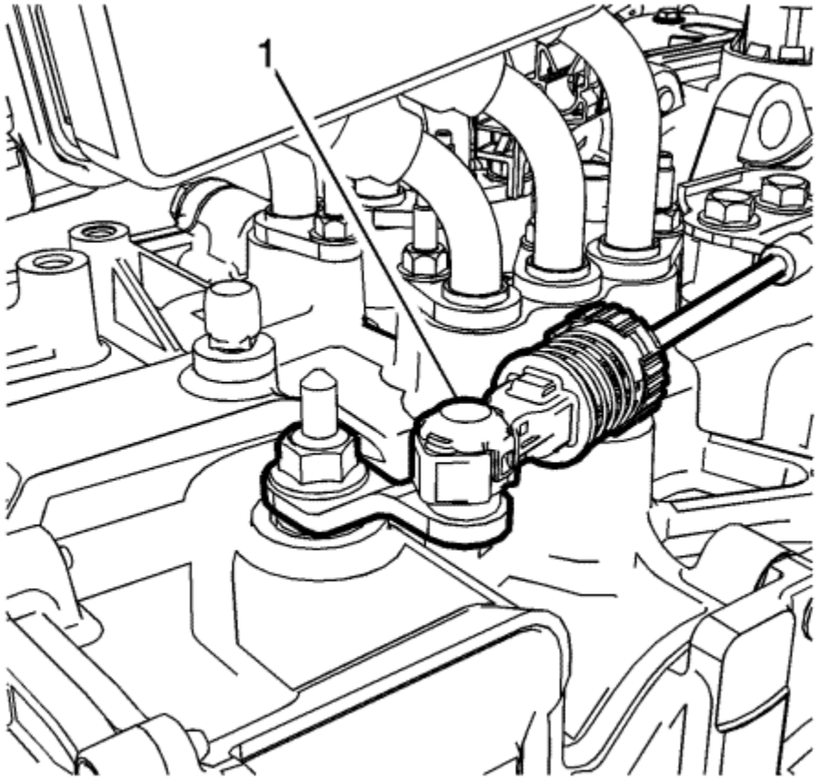

23. Disconnect the transmission range selector lever cable terminal (1) from the transmission manual pin, then position the cable out of the way.

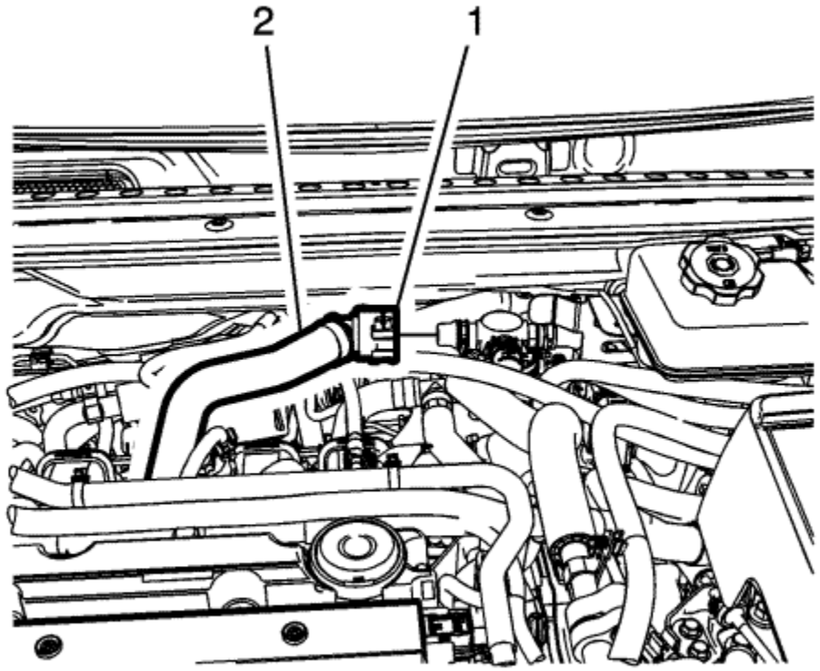

24. Unlock the connector (1) and disconnect the heater water shutoff valve inlet hose (2) from the valve assembly.

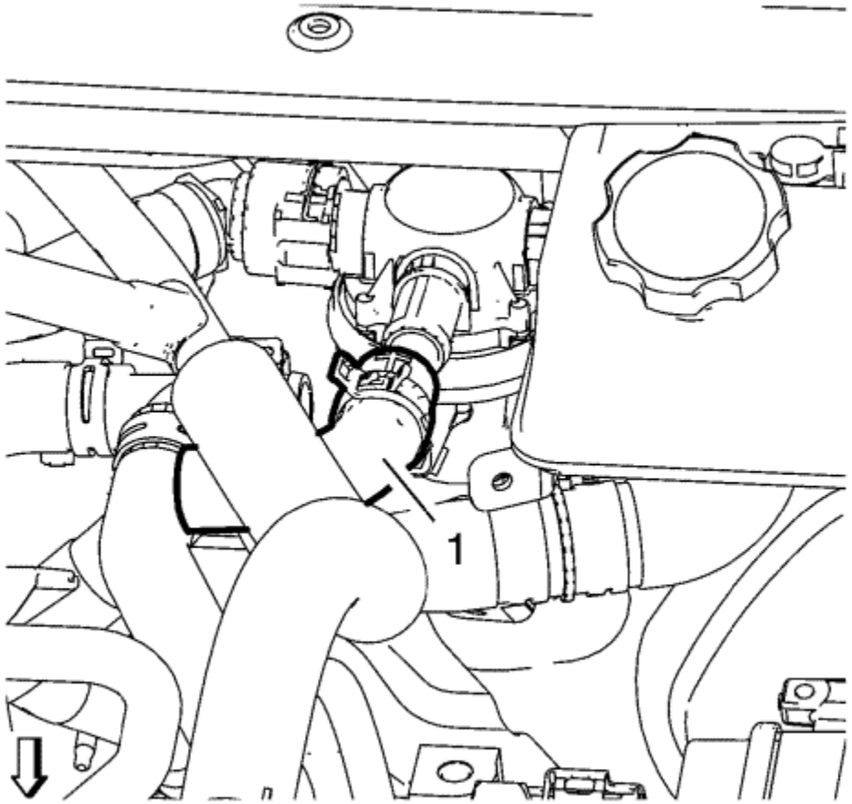

25. Disconnect the heater water shutoff valve outlet hose (1) from the valve assembly.

    Note: Do not remove any hoses from the reservoir.

26. Remove the engine coolant reservoir and lay down on the engine. Refer to Coolant Recovery Reservoir Replacement .

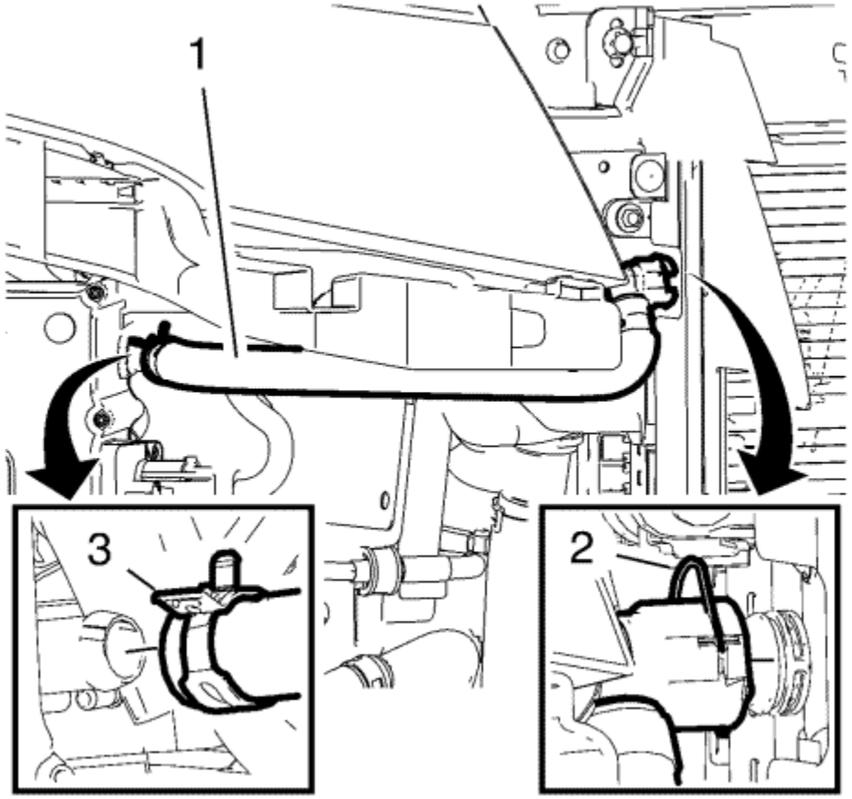

27. Unlock the connector (2) and release the clamp (3).
28. Remove the drive motor power inverter module coolant radiator hose (1).

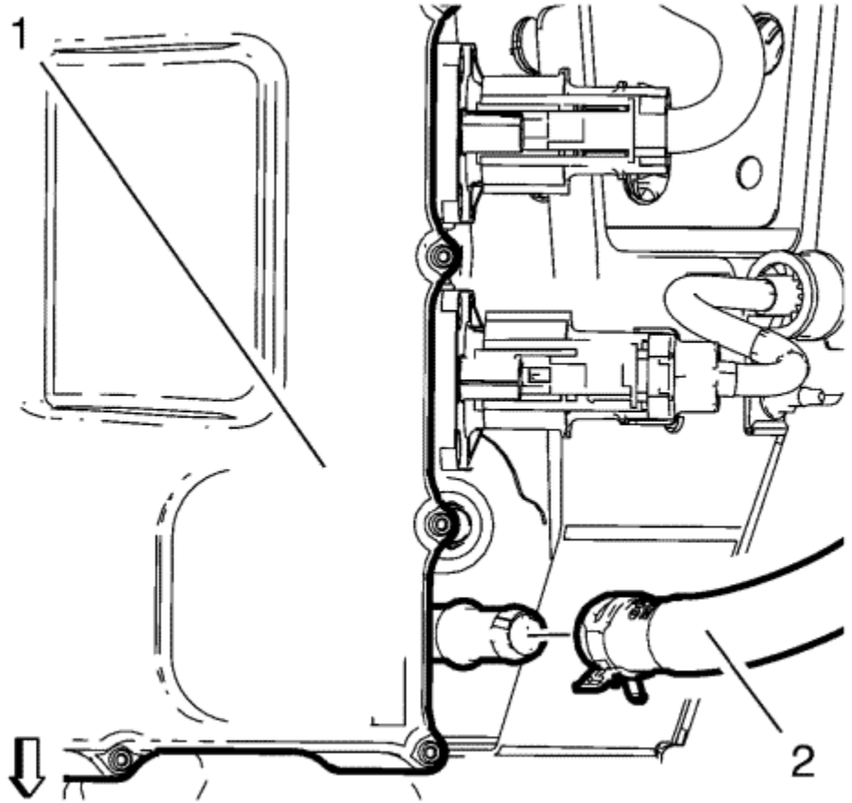

29. Disconnect the drive motor power inverter module cooling outlet hose (2) from the charger (1).

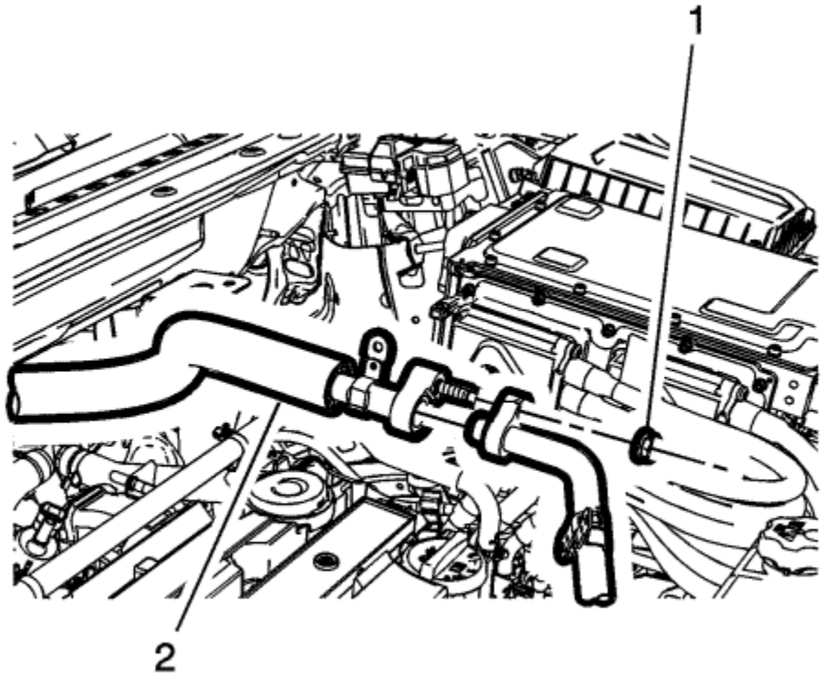

30. Remove the nut (1) and separate the air conditioning compressor and evaporator hose (2) at the connection above the valve cover.
31. Disconnect the air conditioning evaporator thermal expansion valve tube from the condenser. Refer to Air Conditioning Evaporator Thermal Expansion Valve Tube Replacement .

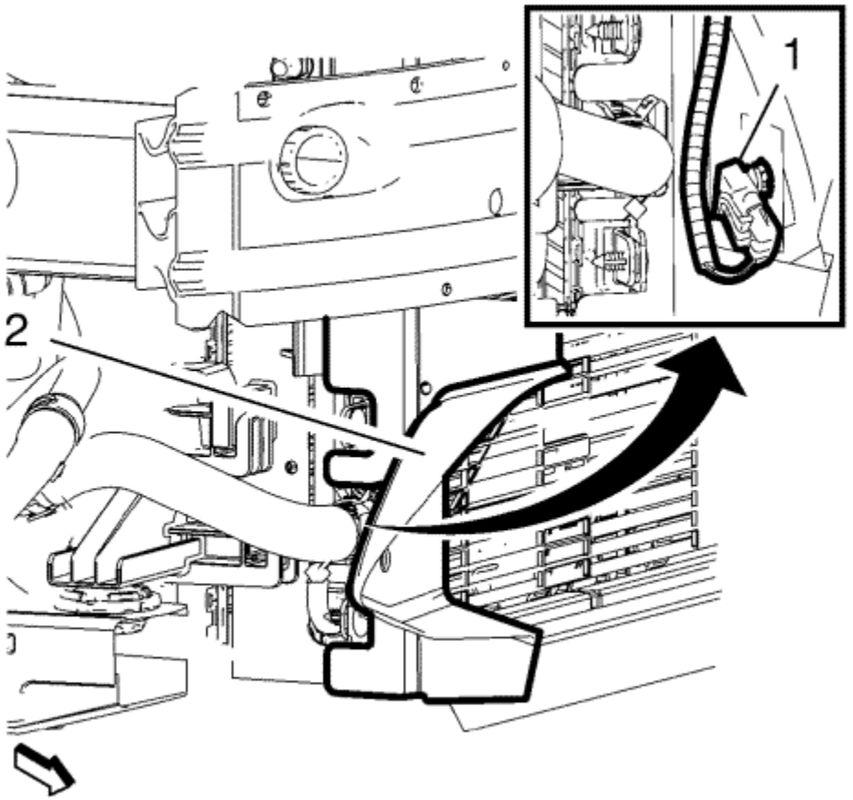

32. Unclip the ambient temperature sensor (1) and the wiring harness from the radiator air baffle (2) and hang aside.

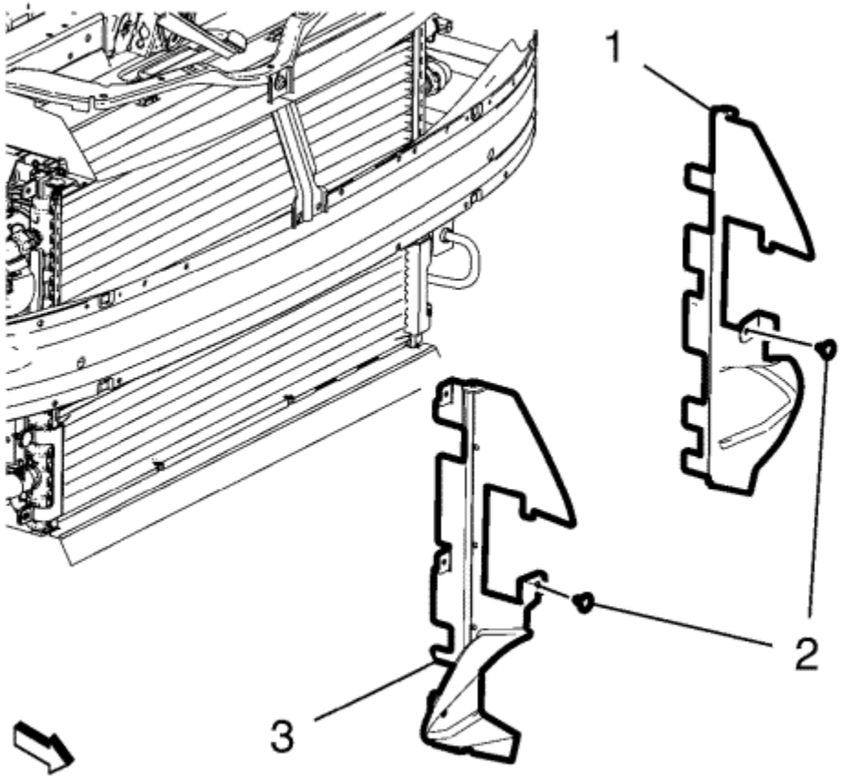

33. Remove all radiator air baffle clips (2).
34. Remove the left and the right radiator air baffles (1, 3).

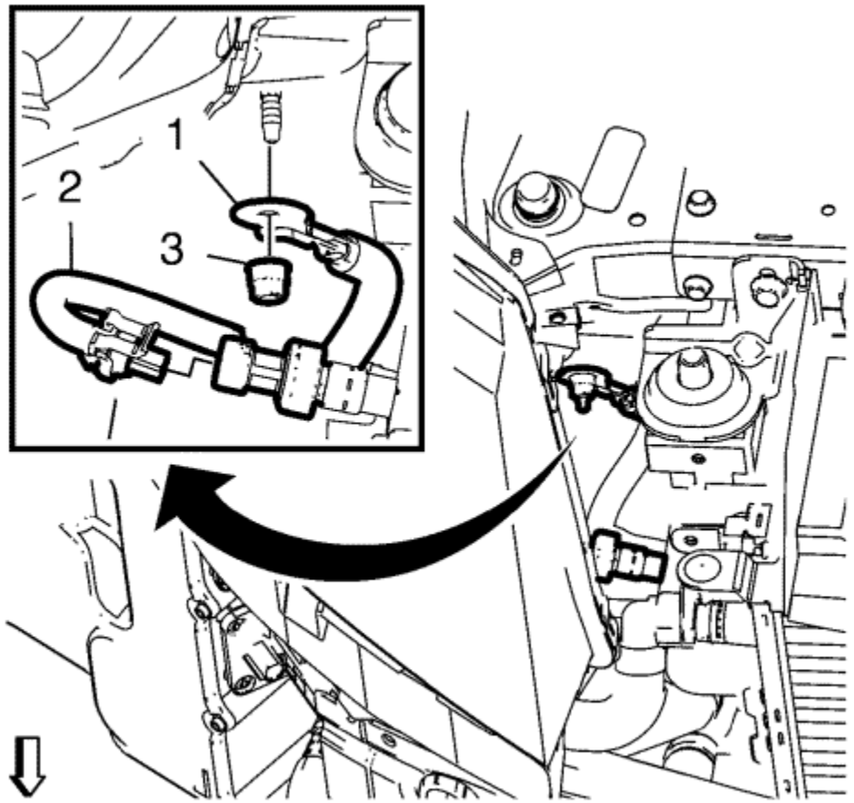

35. Remove the ground cable nut (3) and the ground cable (1).
36. Disconnect the AC pressure sensor wiring harness plug (2).

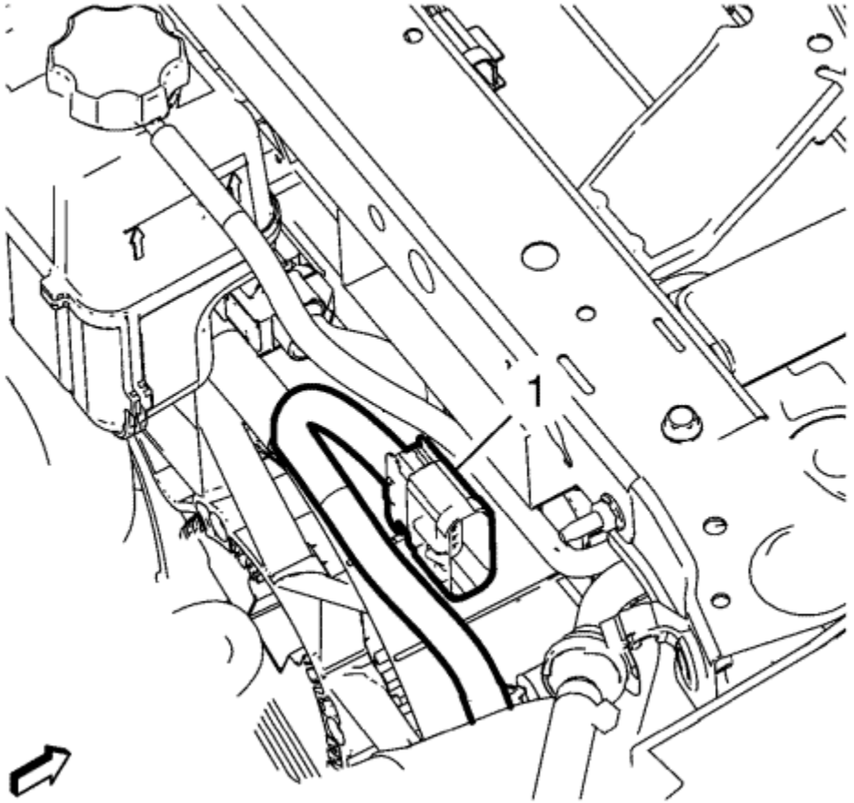

37. Disconnect and unclip the coolant fan wiring harness plug (1).
38. Remove the left headlamp. Refer to Headlamp Replacement : Volt → Ampera .

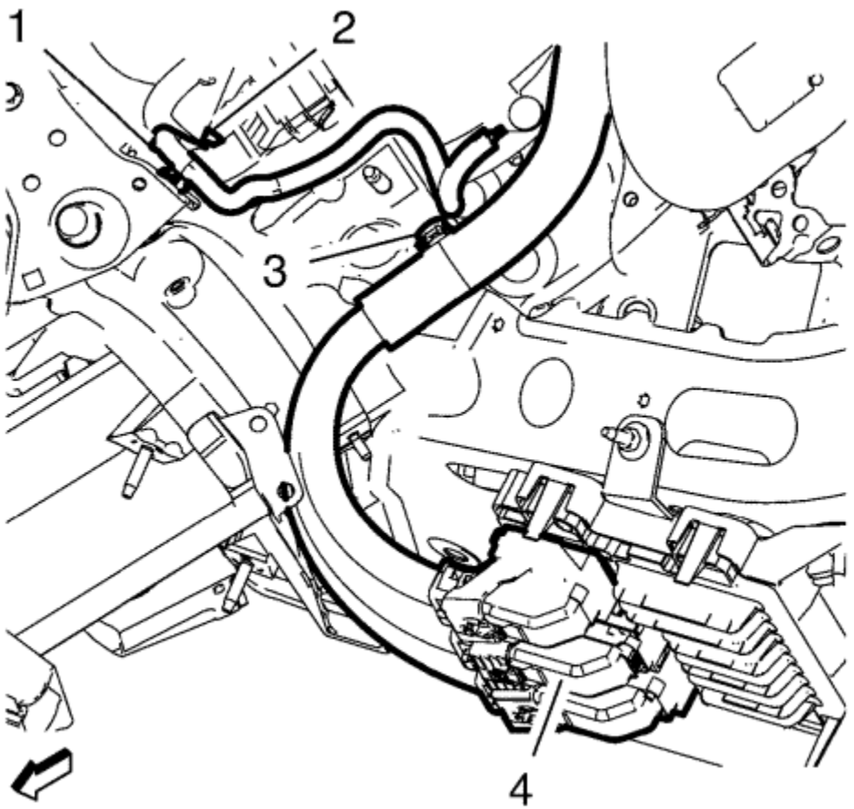

39. Disconnect 3 ECM wiring harness plugs (4) and remove the clip (3).
40. Unclip the drive motor power inverter module ground cable clip (3) and open the cable retainer (2).

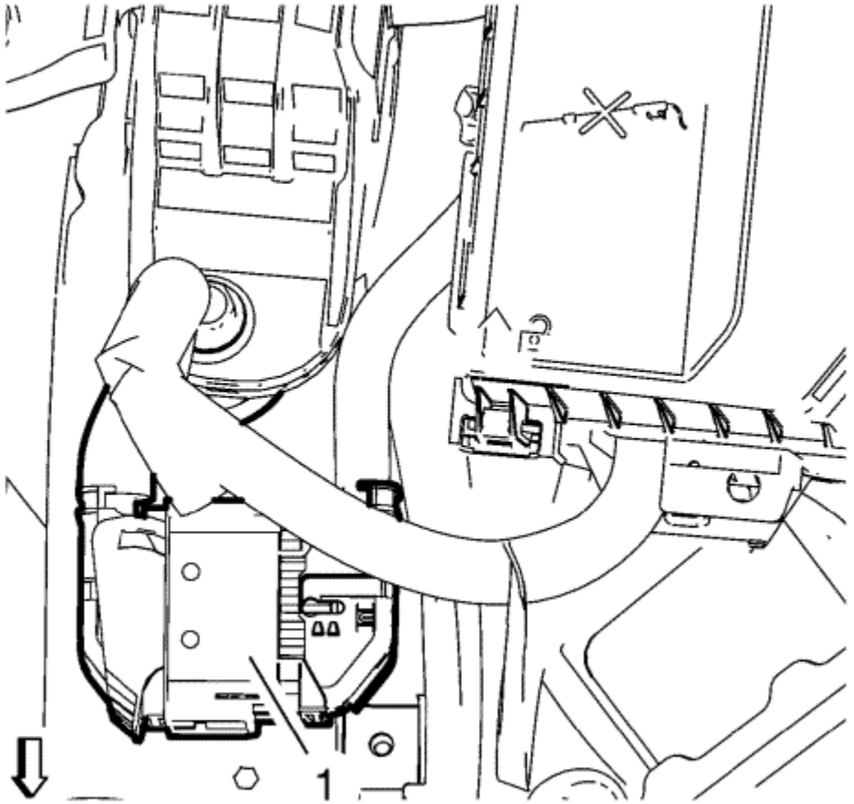

41. Disconnect the wiring harness plug (1).

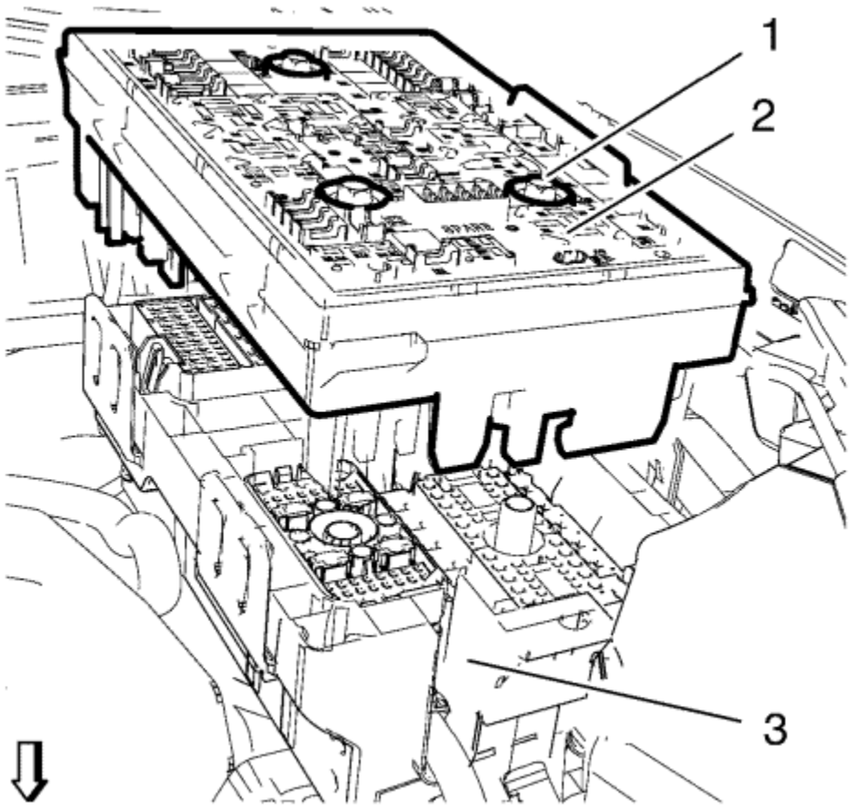

42. Loosen the 3 bolts (1) of the accessory wiring junction block (2).
43. Lift up the upper part of the accessory wiring junction block while uncliping it from the lower part of the accessory wiring junction block (3).

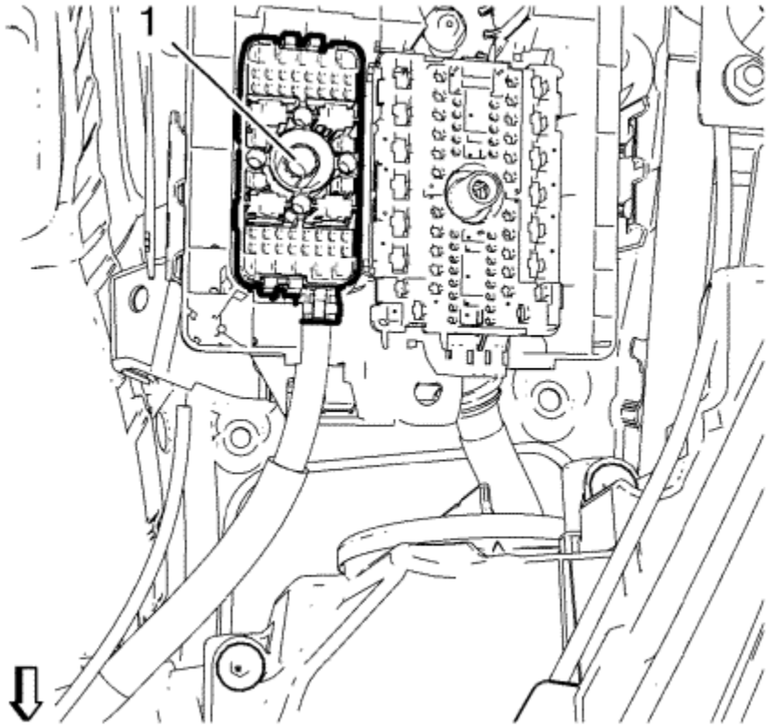

44. Remove the wiring harness (1) from the lower part of the accessory wiring junction block and lay the wiring harness aside.

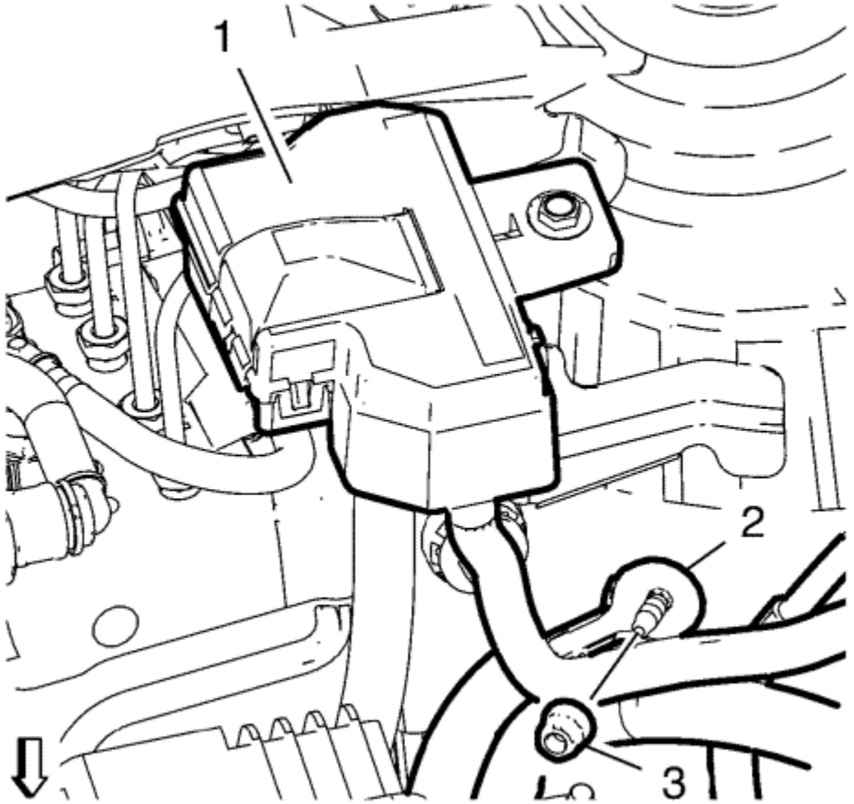

45. Remove the electronic power steering (EPS) ground cable nut (3) and the EPS ground cable (2).
46. Remove the cover (1).

47. Remove the EPS power supply cable nut (1) and the EPS power supply cable (2).
48. Lay EPS ground cable and power supply cable aside.
49. Unclip the wiring harness from the transmission.

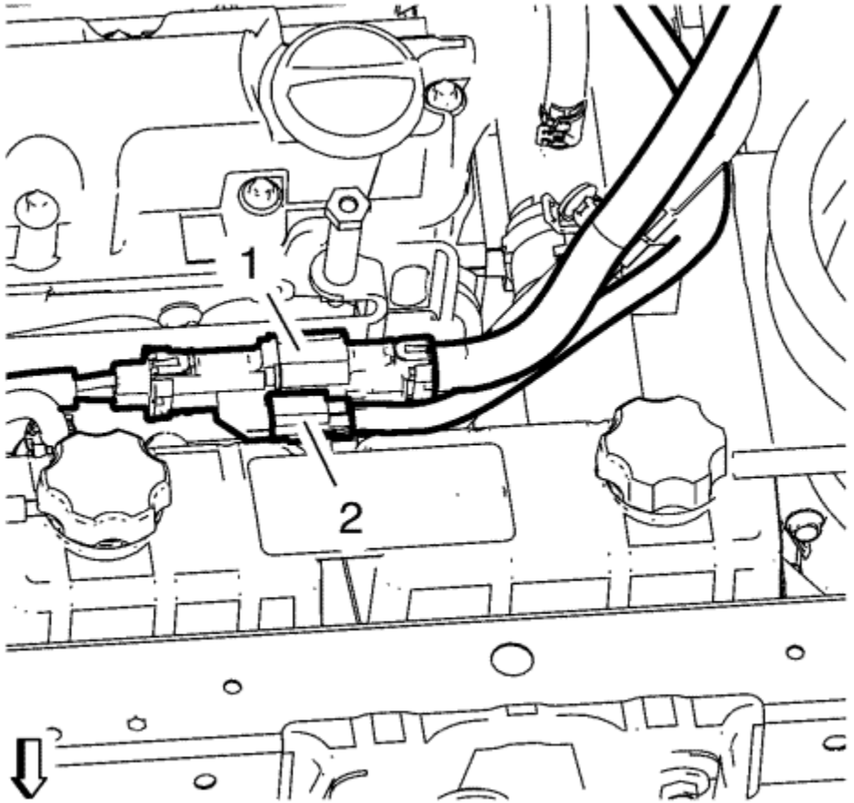

50. Disconnect the Wiring Harness Plug (2). Refer to High Voltage Connectors .
51. Disconnect the high voltage-wiring harness plug (1). Refer to High Voltage Connectors .
52. Raise the vehicle. Refer to Lifting and Jacking the Vehicle .

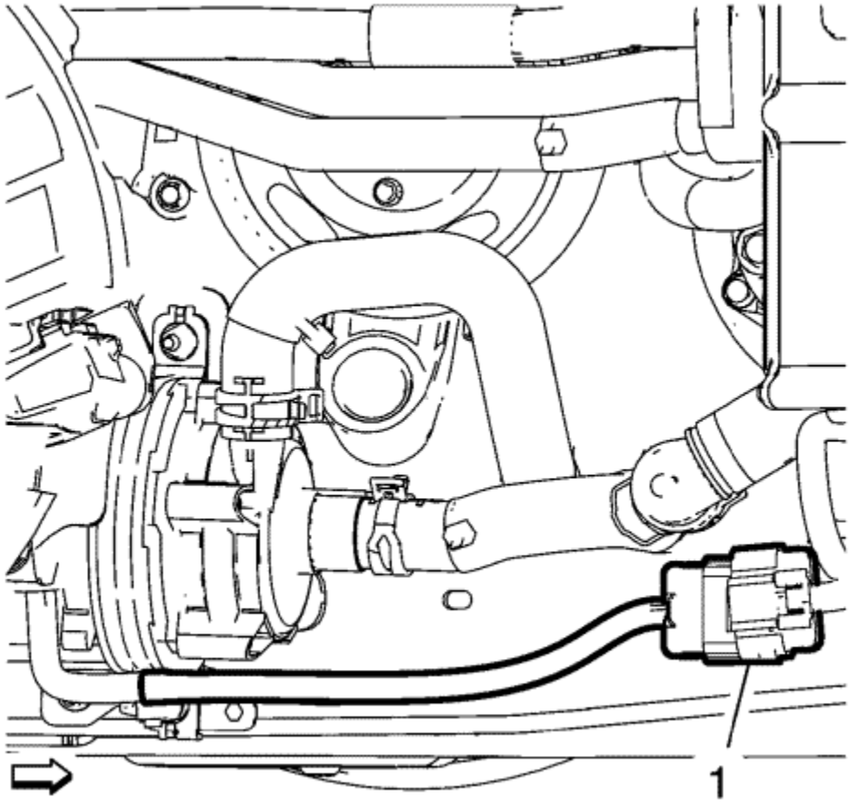

53. Disconnect the heater water auxiliary pump wiring harness plug (1).

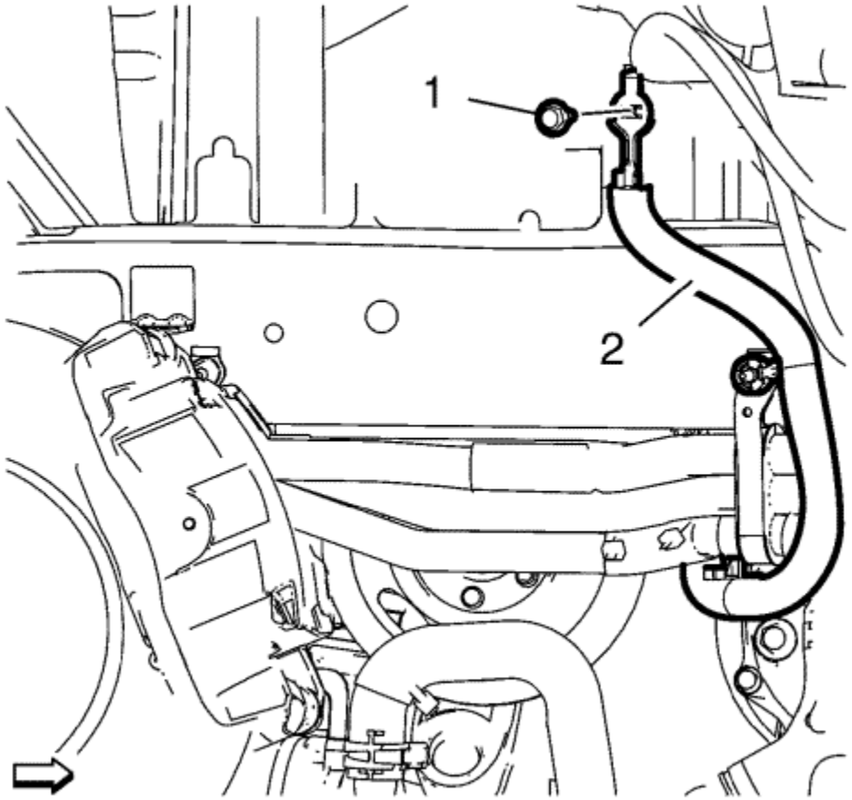

54. Remove the ground cable nut (1) and unclip the ground cable (2).

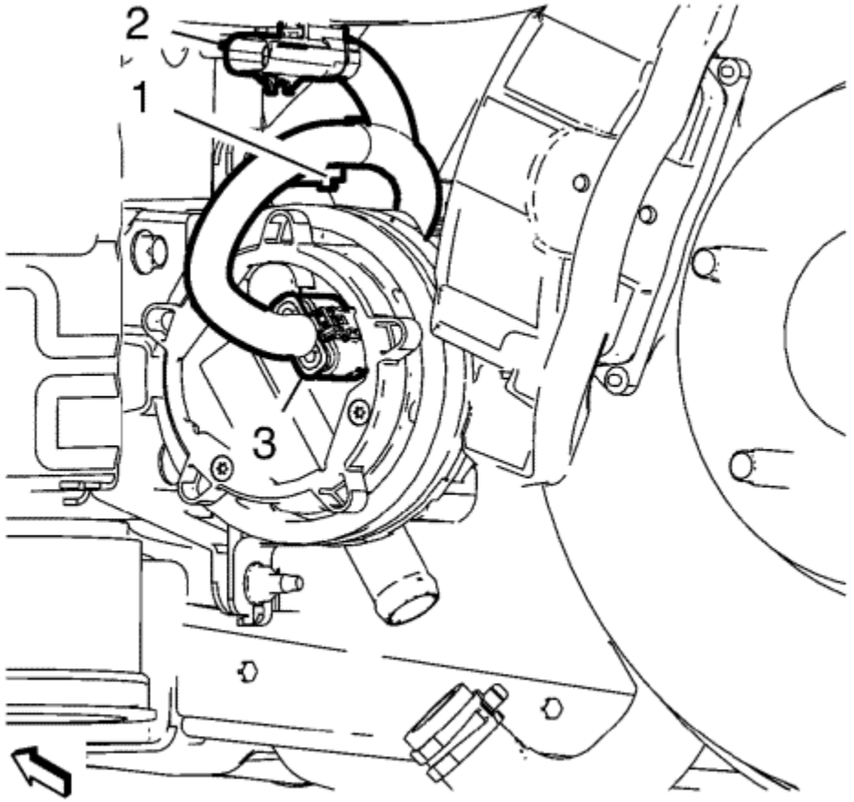

55. Disconnect the drive motor generator power inverter module coolant pump wiring harness plug (3) and unclip the clip (1).
56. Disconnect and unclip the wiring harness plug (2).

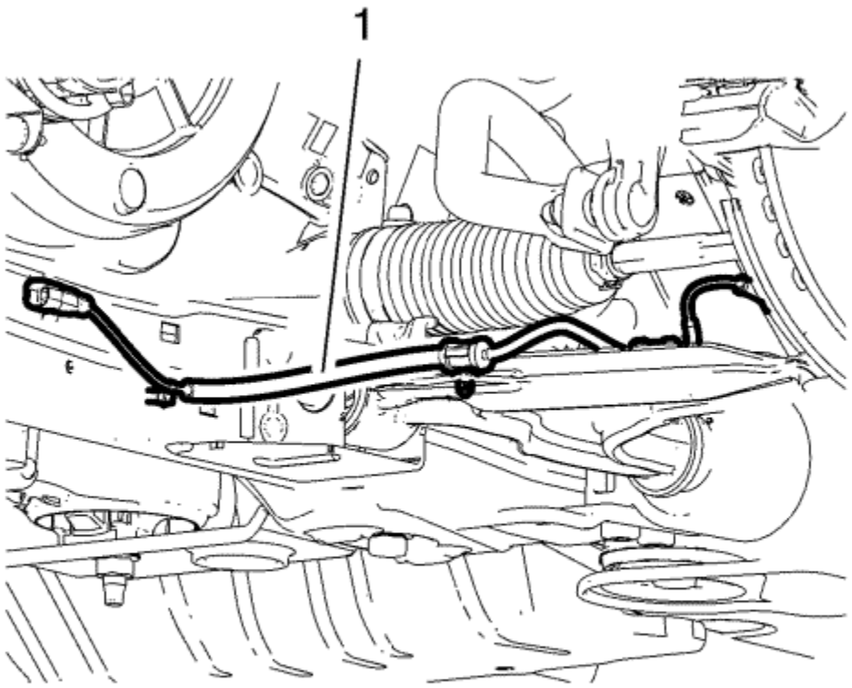

57. Disconnect the left and right wheel speed sensor wiring harness plug and unclip the wiring harness (1) from the lower control arms and the suspension frame, then position out of the way.
58. Remove the left and right anti-roll bar links from the strut assemblies. Refer to Anti-roll Bar Link Replacement .
59. Disconnect the steering linkage outer track rods from the steering knuckles. Refer to Steering Linkage Outer Track Rod Replacement .
60. Disconnect the left and right lower control arms from the steering knuckles. Refer to Lower Control Arm Replacement .
61. Disconnect the left and right front wheel shafts from the wheel hubs. Refer to Front Wheel Drive Shaft Replacement .
62. Remove the catalytic converter. Refer to Catalytic Converter Replacement .

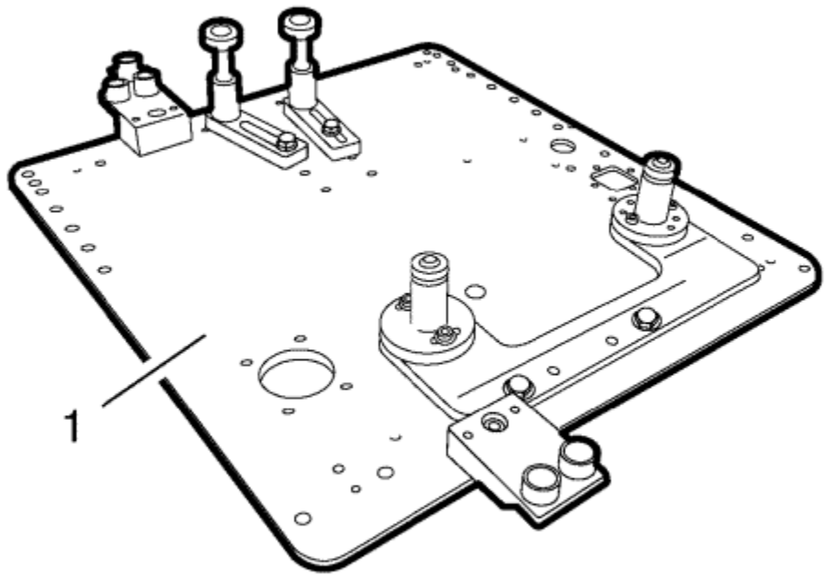

Note: The SPX installation manual is supplied with the special tool and is also available online from SPX directly. Go to www.spxtools-shop.com.

63. Assemble the *EN-49290* support tool (1) according to the details provided in the SPX installation manual.
64. Support the *CH-904* base frame on a jack.
65. Support the *EN-49290* support tool on the *CH-904* base frame .

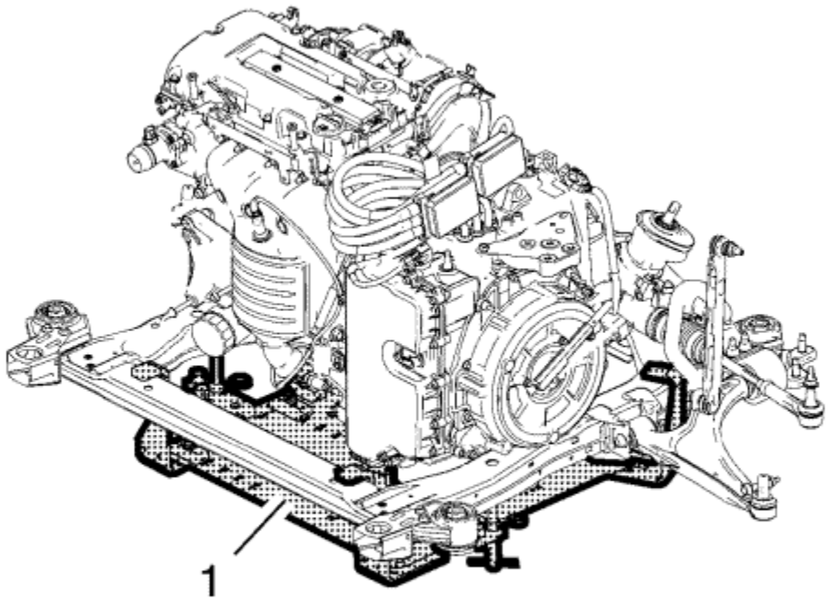

Note: The SPX installation manual is supplied with the special tool and is also available online from SPX directly. Go to www.spxtools-shop.com.

66. Install the *EN-49290* support tool (1) according to the details provided in the SPX manual.
67. Lower the vehicle.
68. Place the ECM and the accessory wiring junction block wiring harnesses on the top of engine assembly.
69. Place all wiring harnesses and hoses on the powertrain unit if possible or ensure at least that they are free.

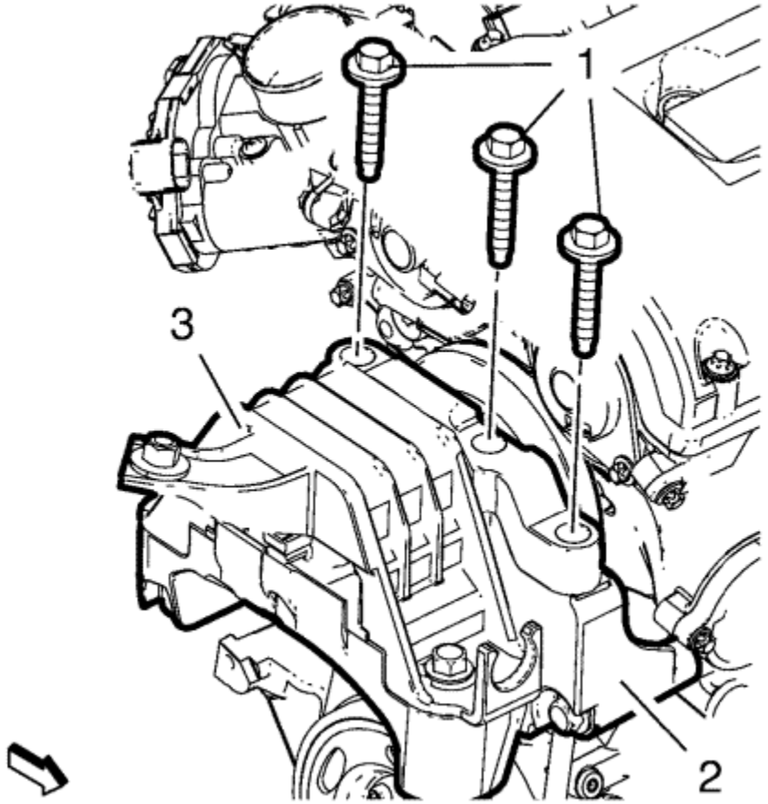

70. Remove and DISCARD the 3 engine mount bolts (1) from the engine mount (3) and the engine mount bracket (2).

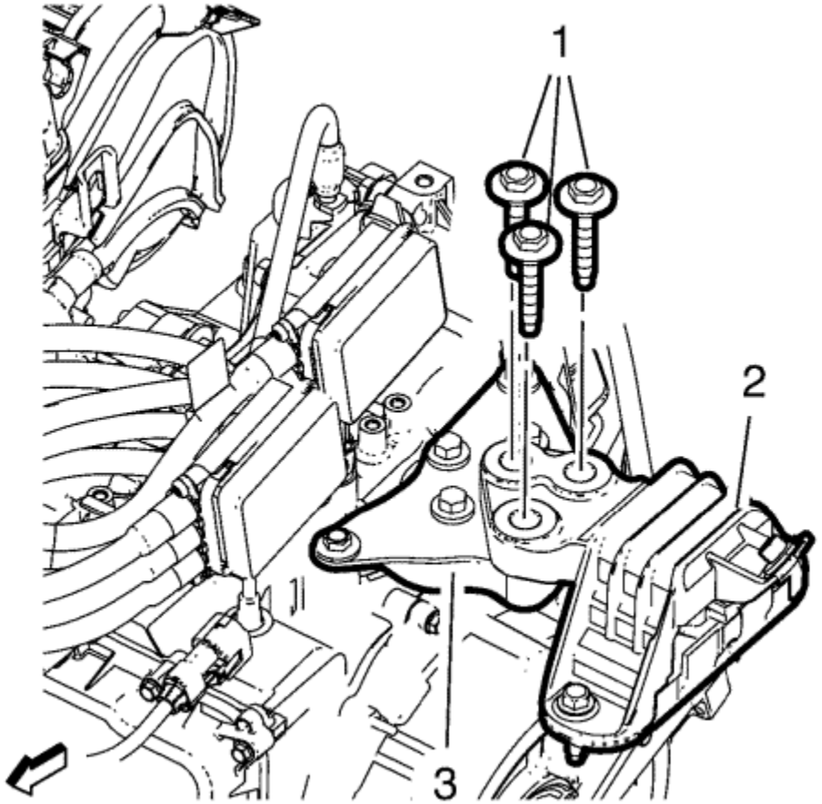

71. Remove and DISCARD the 3 transmission mount bolts (1) from the transmission mount (2) and the transmission mount bracket (3).
72. Raise the vehicle.

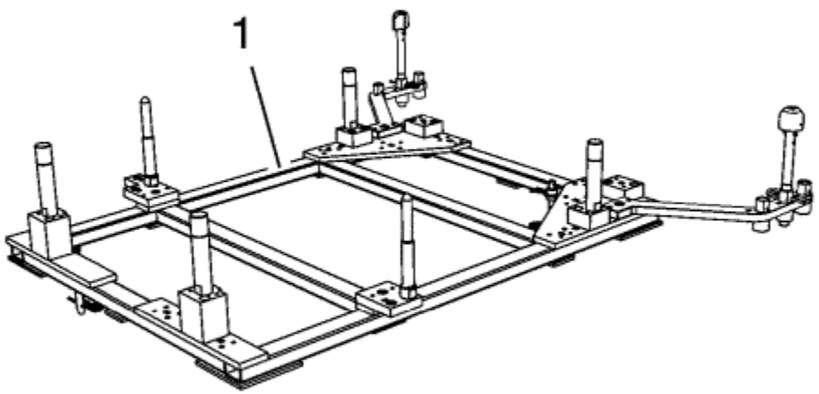

Note: The SPX installation manual is supplied with the special tool and is also available online from SPX directly. Go to www.spxtools-shop.com.

73. Assemble the *CH-49289* centring frame (1) according to the details provided in the SPX manual.
74. Support the *CH-904* base frame on a jack.
75. Support the *CH-49289* centring frame on the *CH-904* base frame .

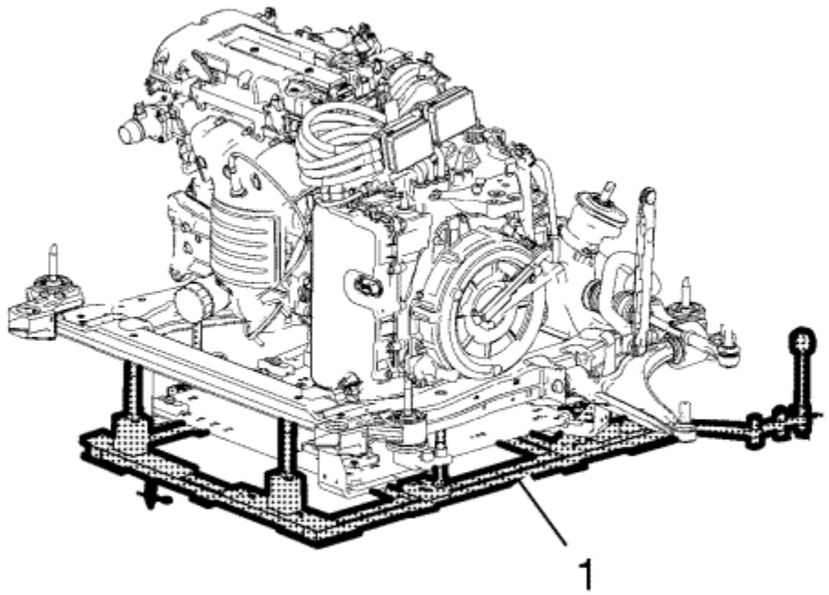

Note: The SPX installation manual is supplied with the special tool and is also available online from SPX directly. Go to www.spxtools-shop.com.

76. Install the *CH-49289* centring frame (1) according to the details provided in the SPX manual.

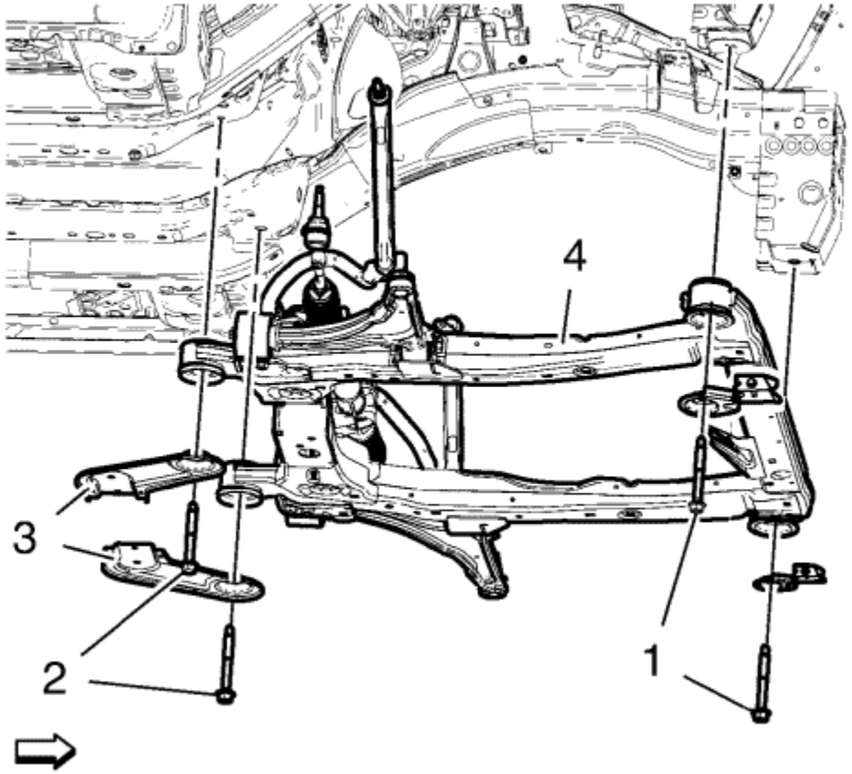

Note: Simplified graphic. Engine/transmission unit is fixed with engine support tool to suspension frame. Suspension frame is supported by centring adapter and underframe.

77. Remove the suspension frame bolts (1, 2).
78. Remove the frame reinforcements (3).

Note: A second technician is required.

79. Slowly and carefully lower the suspension frame (4) with the powertrain (PT) unit and the radiator assembly from the vehicle. Thereby take care on coolant hoses, wiring harnesses and other components which could be caught on the vehicle.

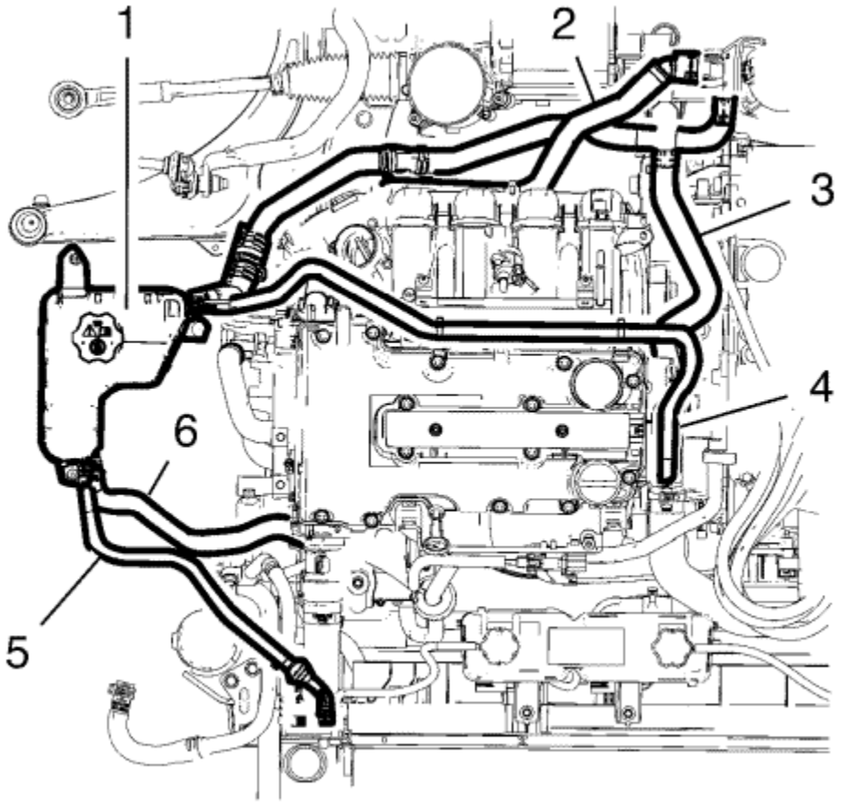

80. Disconnect the coolant hose (6) from the radiator outlet hose tee.
81. Disconnect the coolant vent hose (5) from the engine coolant radiator.
82. Disconnect the engine coolant air bleed hose (4) from the water outlet.
83. Disconnect the heater water shutoff valve inlet hose (2) from the water pump.
84. Disconnect the heater water shutoff valve outlet hose (3) from the water outlet.
85. Lay the engine coolant reservoir (1) along with the coolant hoses aside.

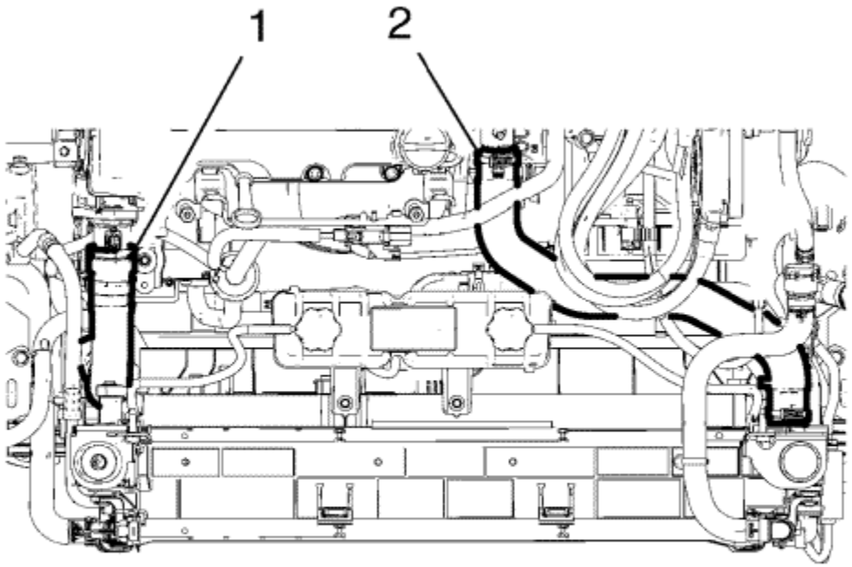

86. Disconnect the radiator outlet hose (1) from the engine coolant thermostat housing.
87. Disconnect the radiator inlet hose (2) from the water outlet.
88. Loosen the coolant hose assembly from the suspension frame.
89. Disconnect the transmission oil cooler pipes from the radiator. Refer to Transmission Fluid Cooler Hose/Pipe Quick-Connect Fitting Disconnection and Connection .
90. Remove the entire radiator assembly from the suspension frame.
91. Remove left and right front wheel drive shafts from the transmission. Refer to Front Wheel Drive Shaft Replacement .
92. Disconnect and unclip all wiring harnesses and wiring harness plugs from the transmission.
93. Disconnect the steering gear assist motor connectors. Refer to FEP Connectors : Steering Gear .
94. Install a suitable cable to the 3 engine lift brackets.
95. Install a suitable engine lifting device to the cable.
96. Extend the engine lifting device until the steel cables are slightly tensioned.

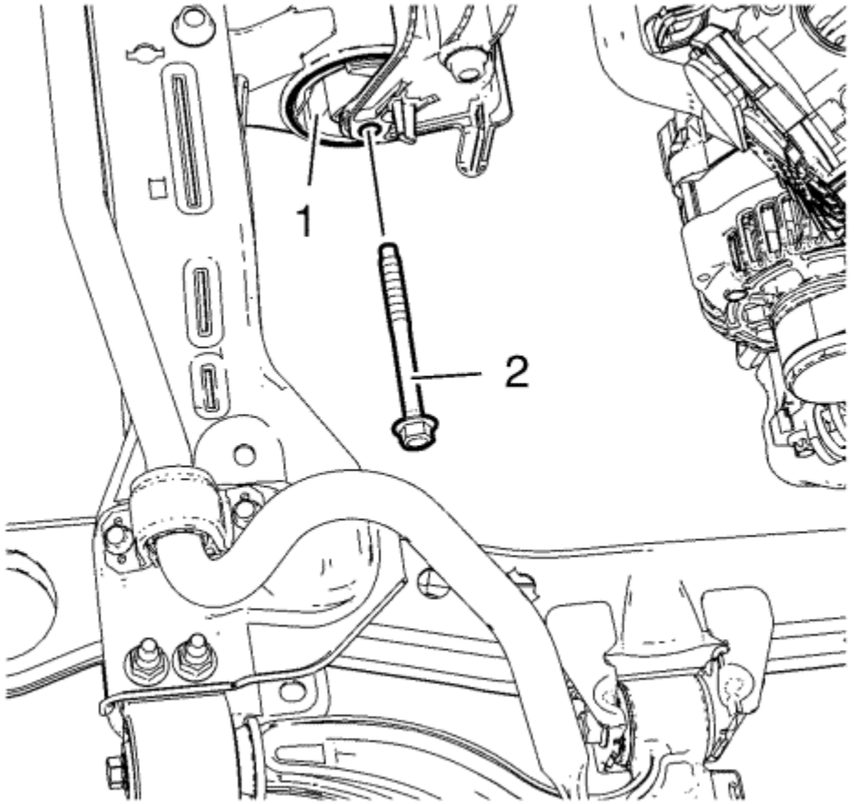

97. Remove the rear transmission mount through bolt (2) from the rear transmission mount (1).

    Note: A second technician is required.

98. Using the engine lifter, remove the PT-unit from the suspension frame.
99. Lay the PT-unit down on a wooden pallet.

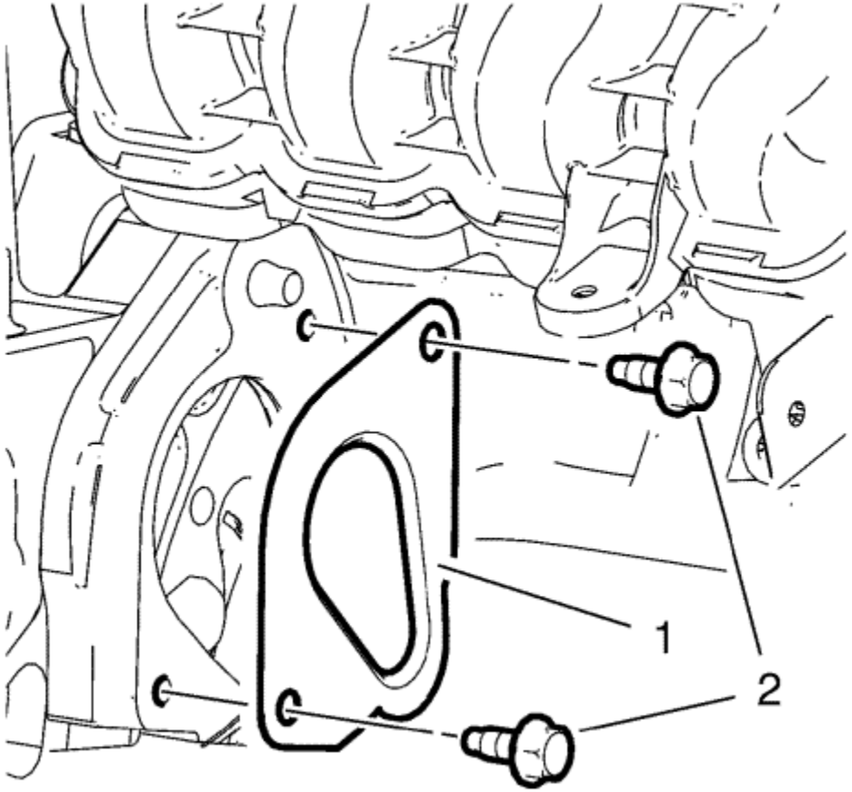

100. Remove the 2 starter opening cover bolts (2).
101. Remove the starter opening cover (1).
102. Remove the 4 torque dampener bolts.
103. Remove the 9 transmission fasteners.

    Note: A second technician is required.

104. Using an engine lifter, remove the transmission from the engine.
105. Install the engine to a suitable engine stand.
106. Transfer all parts as needed.

Installation Procedure

1. Remove the engine from the engine stand and lay it down on a wooden pallet, using an engine lifter.

    Note: A second technician is required.

2. Position the engine to the transmission assembly.

   Caution: Refer to Fastener Caution in the Preface section.

3. Install the 9 transmission to engine fasteners and tighten to **80 N·m (59 lb ft)**.
4. Install the 4 torque dampener bolts and tighten to **62 N·m (46 lb ft)**.

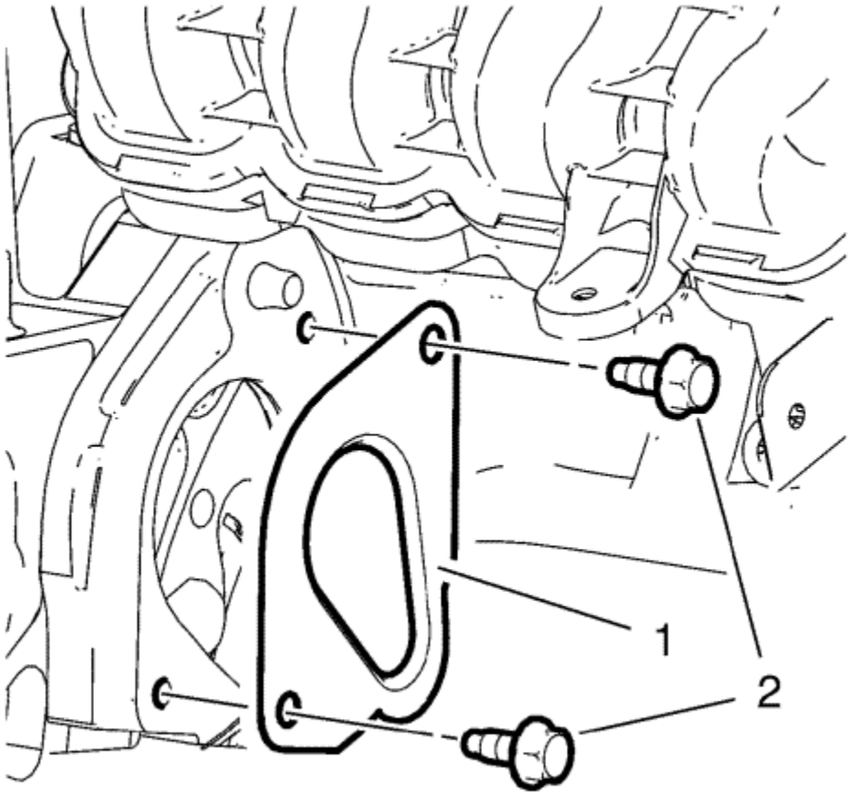

5. Install the starter opening cover (2).
6. Install the 2 starter opening cover bolts (2) and tighten to **20 N·m (15 lb ft)**.
7. Using the engine lifter, position the PT-unit to the suspension frame.

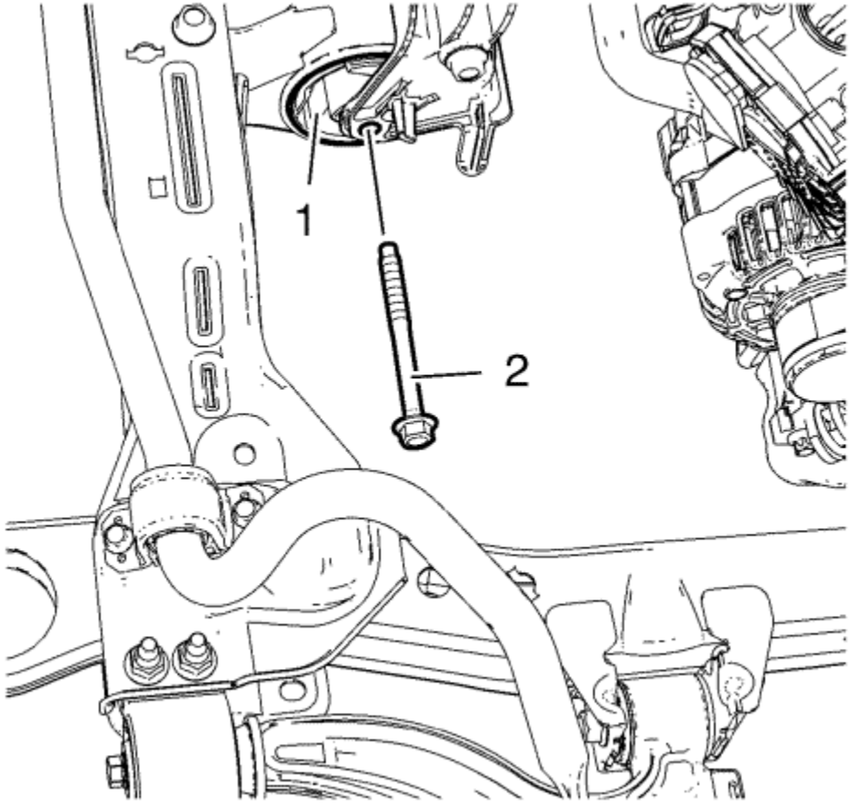

8. Install the rear transmission mount through bolt (2) to the rear transmission mount (1) and tighten to **100 N·m (74 lb ft)**.
9. Remove the engine lifter from the engine lift brackets.
10. Connect the steering gear assist motor connectors. Refer to FEP Connectors : Steering Gear .
11. Connect and clip in all wiring harnesses and wiring harness plugs to the transmission.
12. Install left and right front wheel drive shafts to the transmission. Refer to Front Wheel Drive Shaft Replacement .
13. Install the entire radiator assembly to the suspension frame.
14. Fasten the coolant hose assembly to the suspension frame.

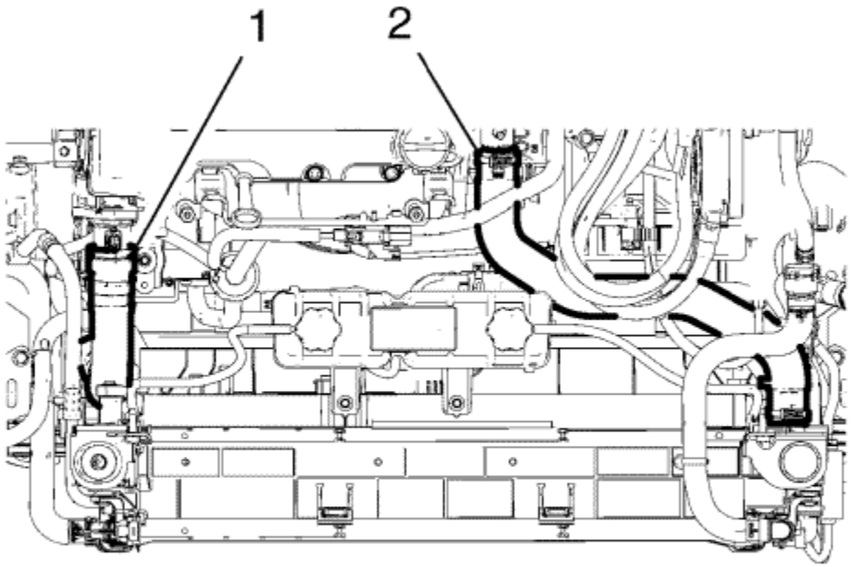

15. Connect the radiator inlet hose (2) to the water outlet.
16. Connect the radiator outlet hose (1) to the engine coolant thermostat housing.
17. Connect the transmission oil cooler pipes to the radiator. Refer to Transmission Fluid Cooler Hose/Pipe Quick-Connect Fitting Disconnection and Connection .

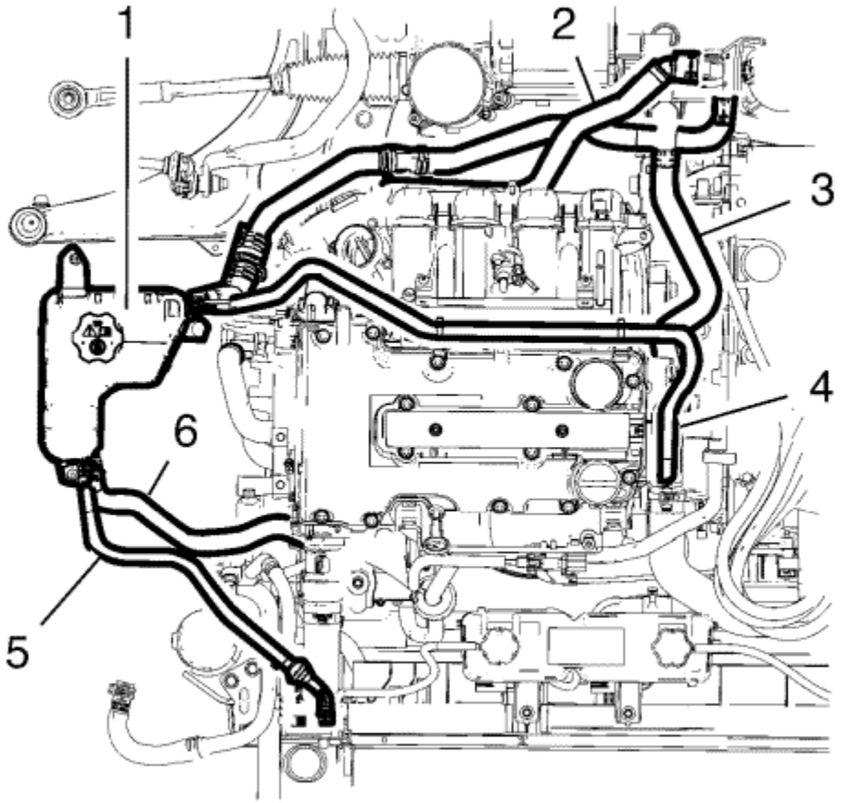

18. Connect the coolant hose (6) to the radiator outlet hose tee.
19. Connect the coolant vent hose (5) to the engine coolant radiator.
20. Connect the engine coolant air bleed hose (4) to the water outlet.
21. Connect the heater water shutoff valve inlet hose (2) to the water pump.
22. Connect the heater water shutoff valve outlet hose (3) to the water outlet.
23. Lay the engine coolant reservoir (1) down on the engine.

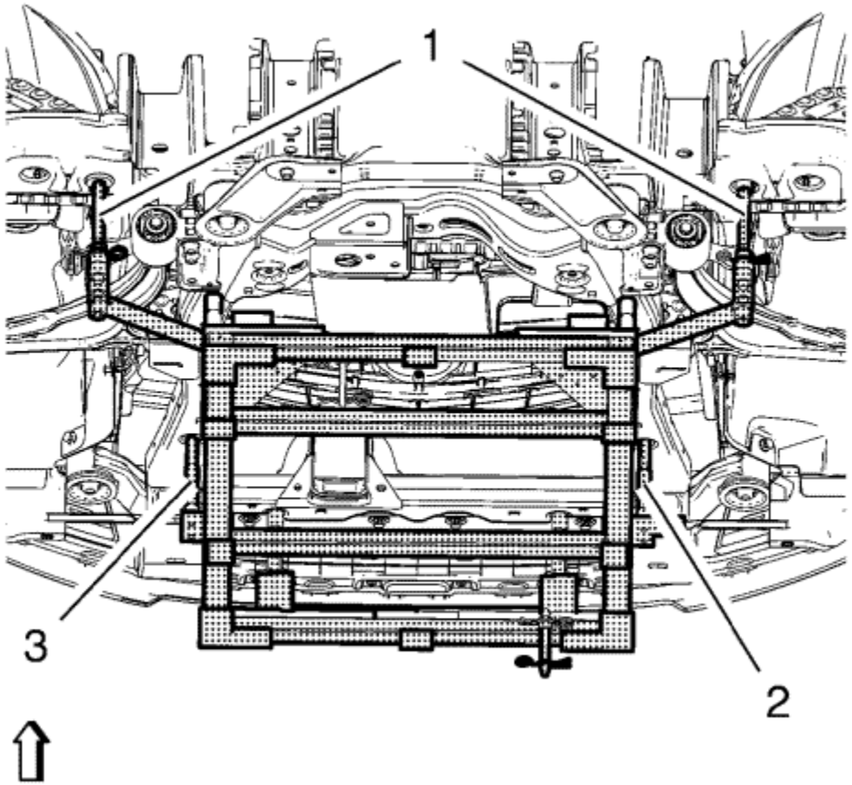

Note: A second technician is required.

24. Position the suspension frame with the PT-unit and the radiator assembly to the vehicle. Thereby take care on wiring harnesses, coolant hoses and other components.
25. Position the suspension frame, so that the positioning pins (1) of the *CH-49289* centring frame match to the appropriate under body holes.

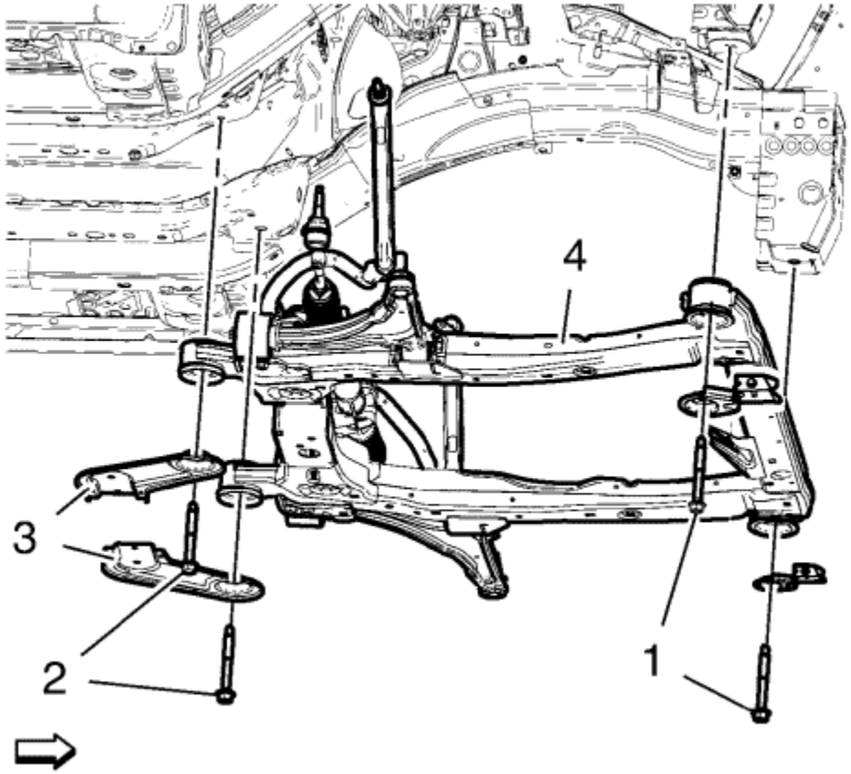

26. Install the frame reinforcements (3) and the frame reinforcement bolts. Hand tighten only.
27. Install the 4 suspension frame bolts (1, 2) and tighten to **160 N·m (118 lb ft)**.
28. Tighten the frame reinforcement bolts to **58 N·m (43 lb ft)**.

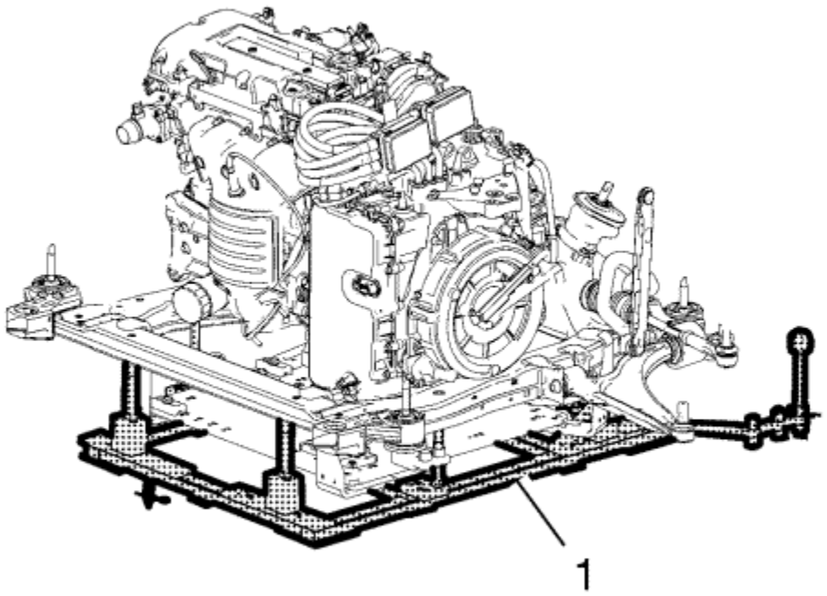

29. Lower the *CH-49289* centering frame (1) with the *CH-904* base frame and a jack.
30. Remove the *CH-49289* centring frame (1) from the *CH-904* base frame .

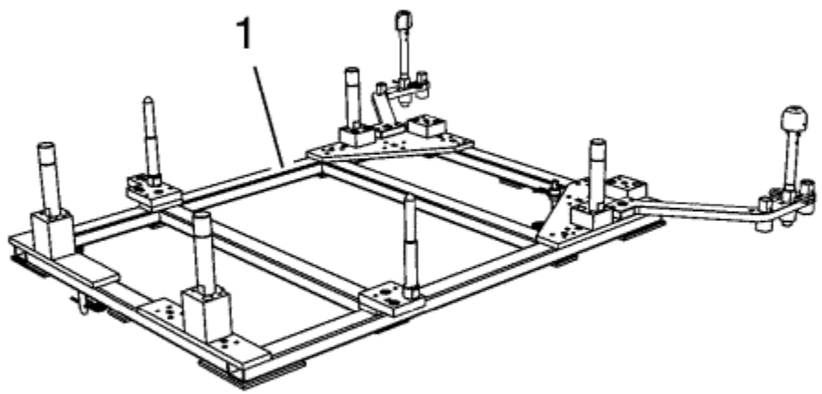

Note: The SPX installation manual is supplied with the special tool and is also available online from SPX directly. Go to www.spxtools-shop.com.

31. Disassemble the *CH-49289* centring frame (1) according to the details provided in the SPX manual.
32. Lower the vehicle.

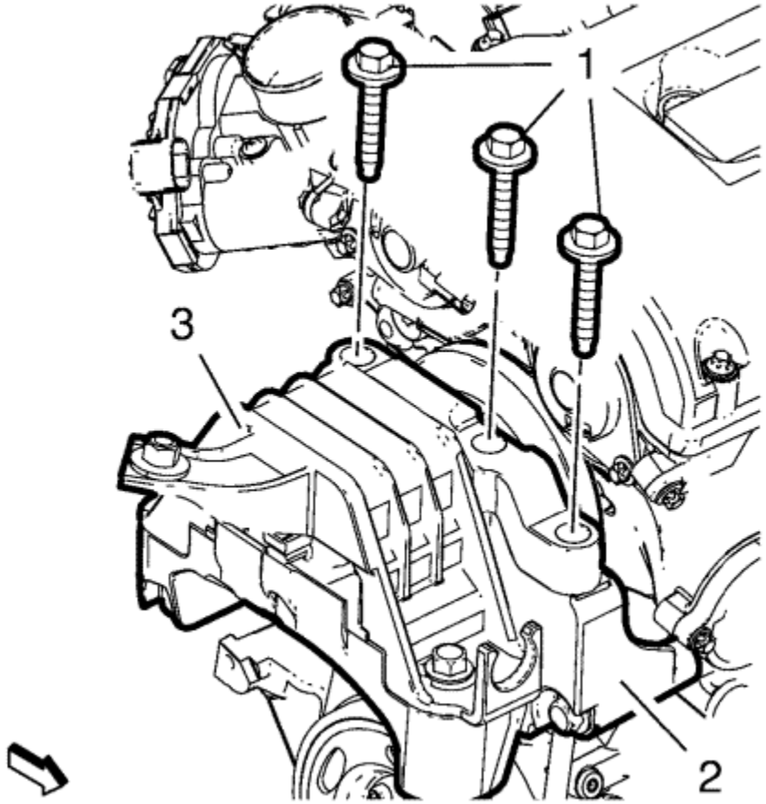

33. Install the 3 NEW engine mount bolts (1) to the engine mount (3) and the engine mount bracket (2) and tighten to **58 N·m (43 lb ft)**.

    Caution: Refer to Torque-to-Yield Fastener Caution in the Preface section.

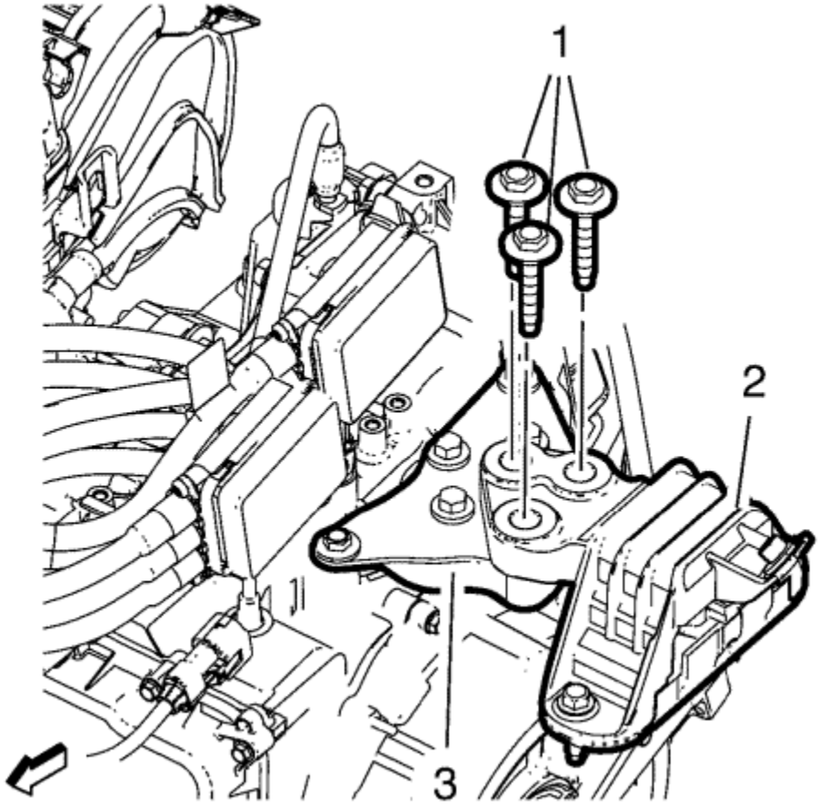

34. Install the 3 NEW transmission mount bolts (1) to the transmission mount (2) and the transmission mount bracket (3) and tighten in a first pass to **100 N·m (74 lb ft)**.
35. Tighten the transmission mount bolts in a second pass to additional **90 - 105 degrees**, using the *EN-470-B* meter .
36. Raise the vehicle.

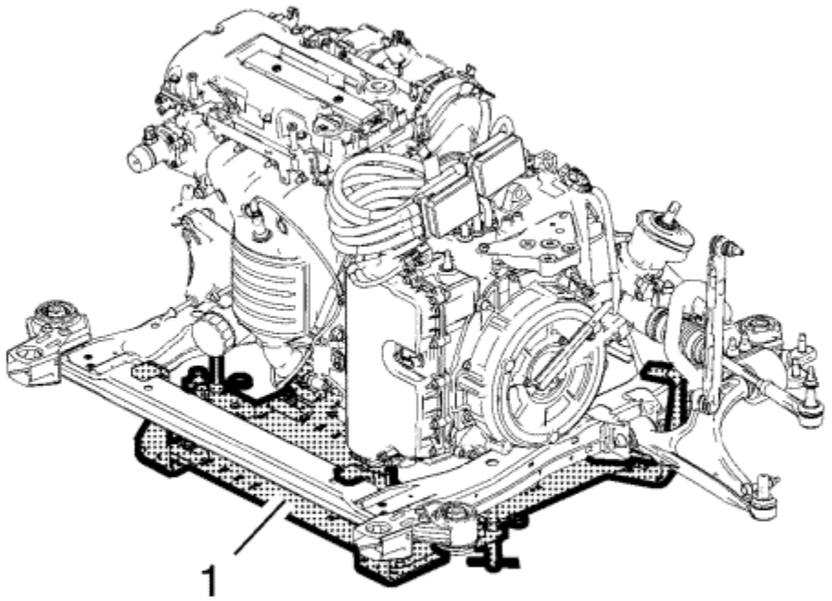

37. Lower the *EN-49290* support tool (1) with the *CH-904* base frame and a jack.
38. Remove the *EN-49290* support tool (1) from the *CH-904* base frame .

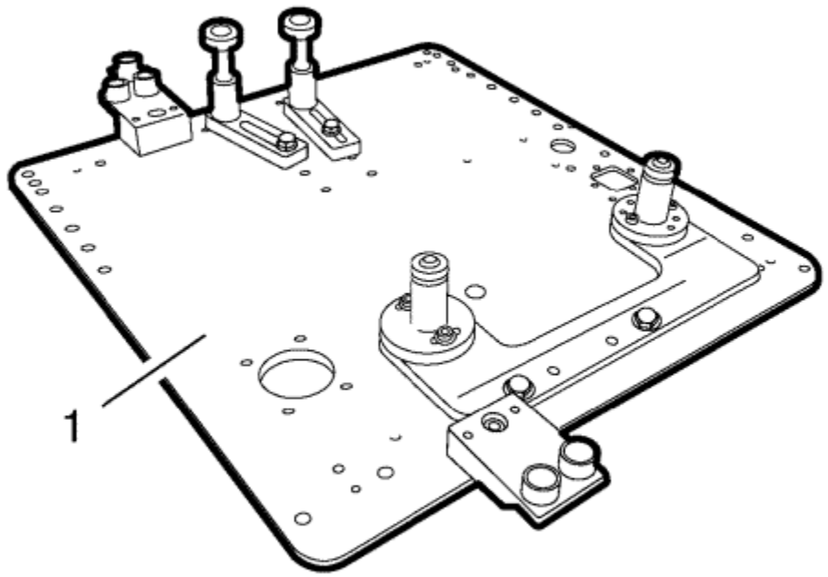

Note: The SPX installation manual is supplied with the special tool and is also available online from SPX directly. Go to www.spxtools-shop.com.

39. Disassemble the *EN-49290* support tool (1) according to the details provided in the SPX installation manual.
40. Install the catalytic converter. Refer to Catalytic Converter Replacement .
41. Connect the left and right front wheel shafts to the wheel hubs. Refer to Front Wheel Drive Shaft Replacement .
42. Connect the left and right lower control arms to the steering knuckles. Refer to Lower Control Arm Replacement .
43. Connect the steering linkage outer track rods to the steering knuckles. Refer to Steering Linkage Outer Track Rod Replacement .
44. Install the left and right anti-roll bar links to the strut assemblies. Refer to Anti-roll Bar Link Replacement .

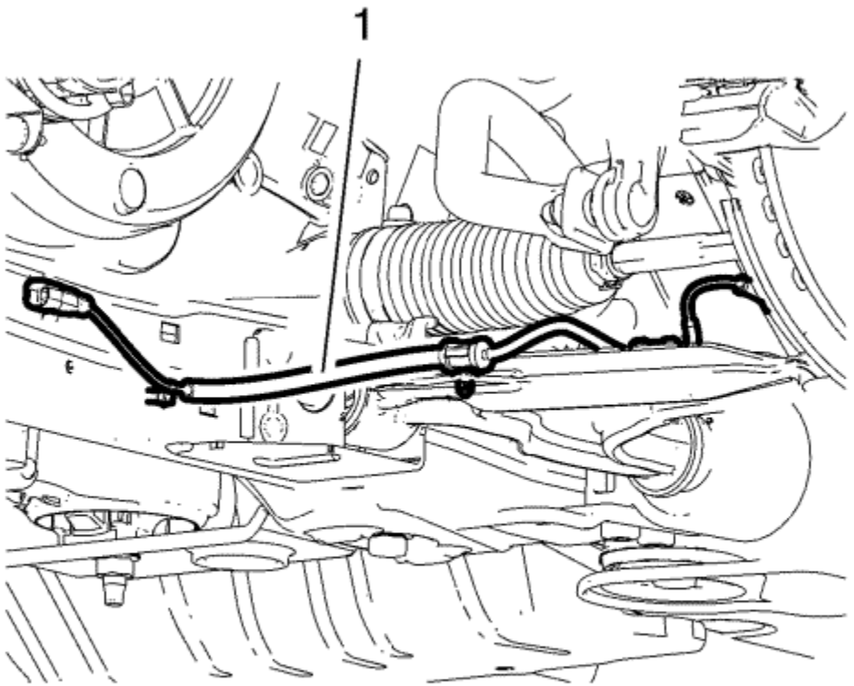

45. Connect the left and right wheel speed sensor wiring harness plug and clip the wiring harness (1) to the lower control arms and the suspension frame.

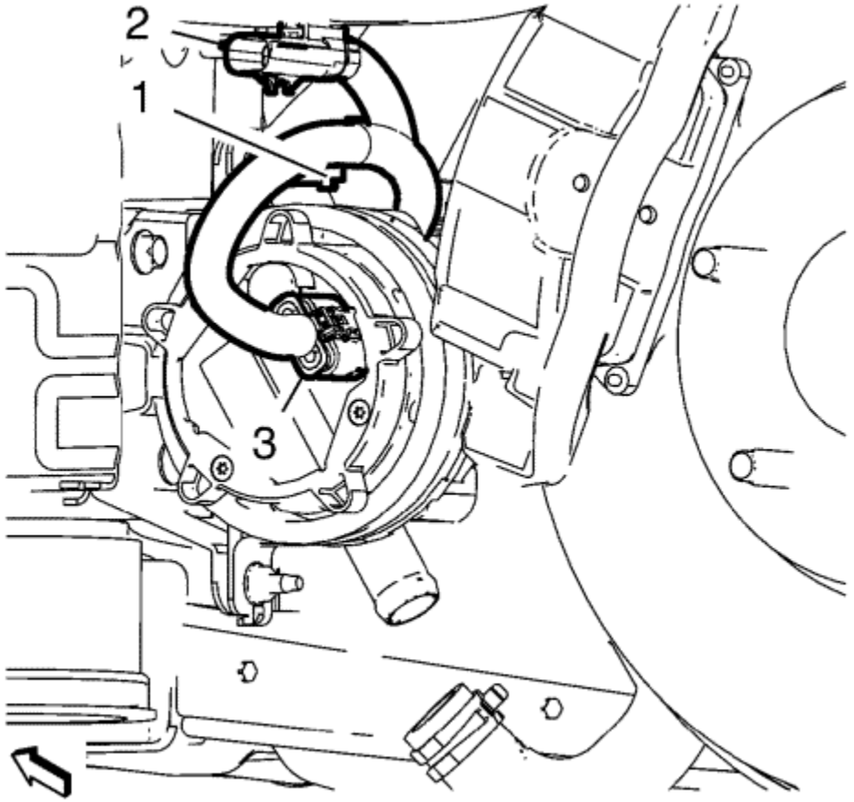

46. Connect the drive motor generator power inverter module coolant pump wiring harness plug (3) and clip in the clip (1).
47. Connect and clip in the wiring harness plug (2).

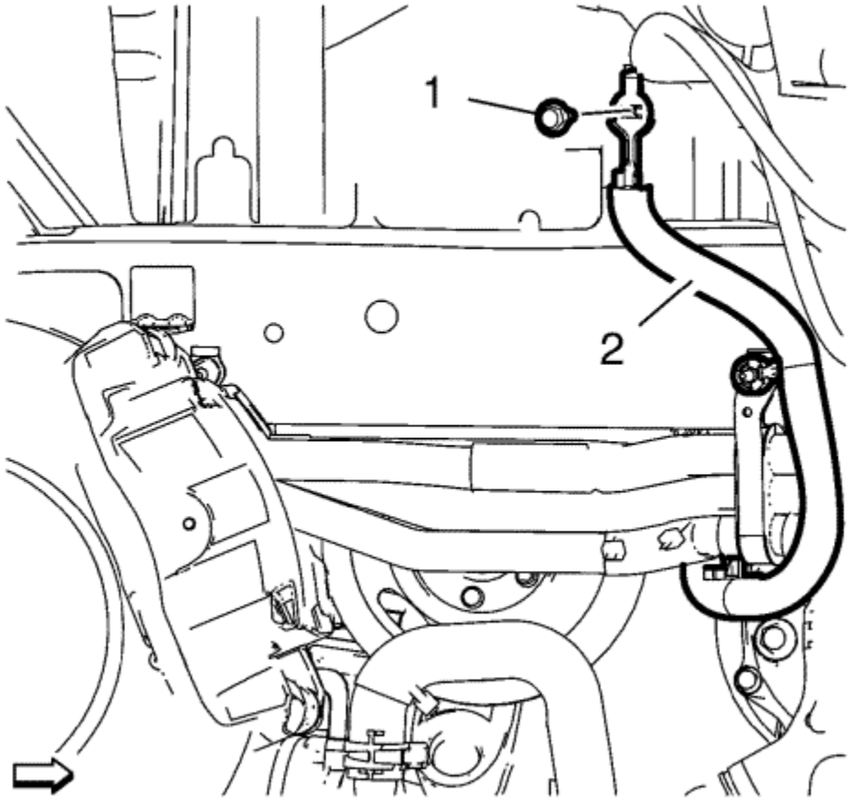

48. Install the ground cable (2).
49. Install and tighten the cable nut (1)

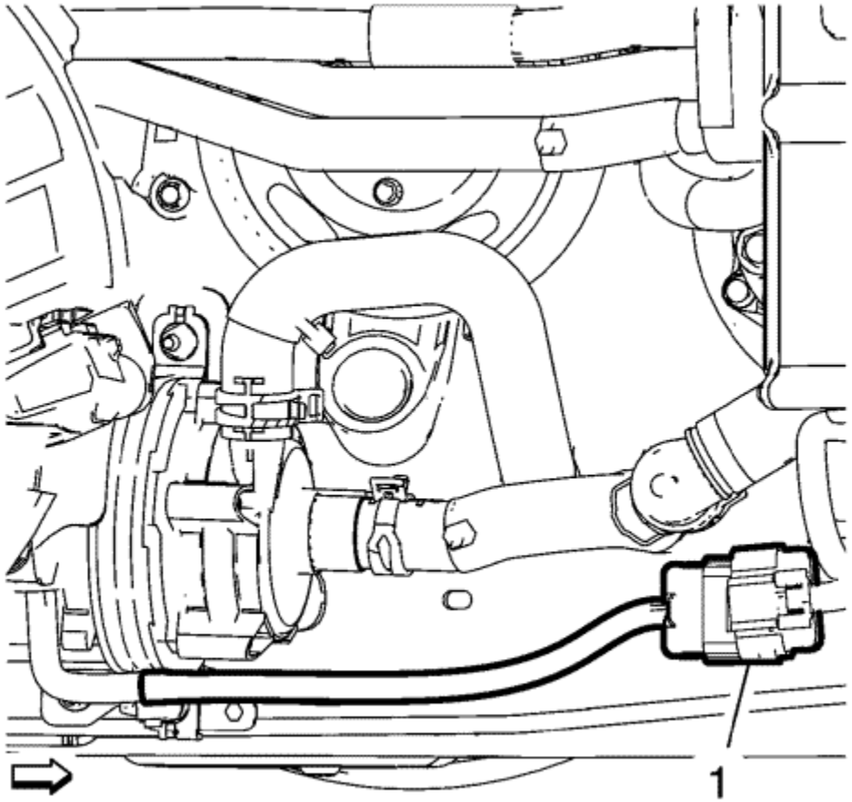

50. Connect the heater water auxiliary pump wiring harness plug (1).
51. Lower the vehicle.

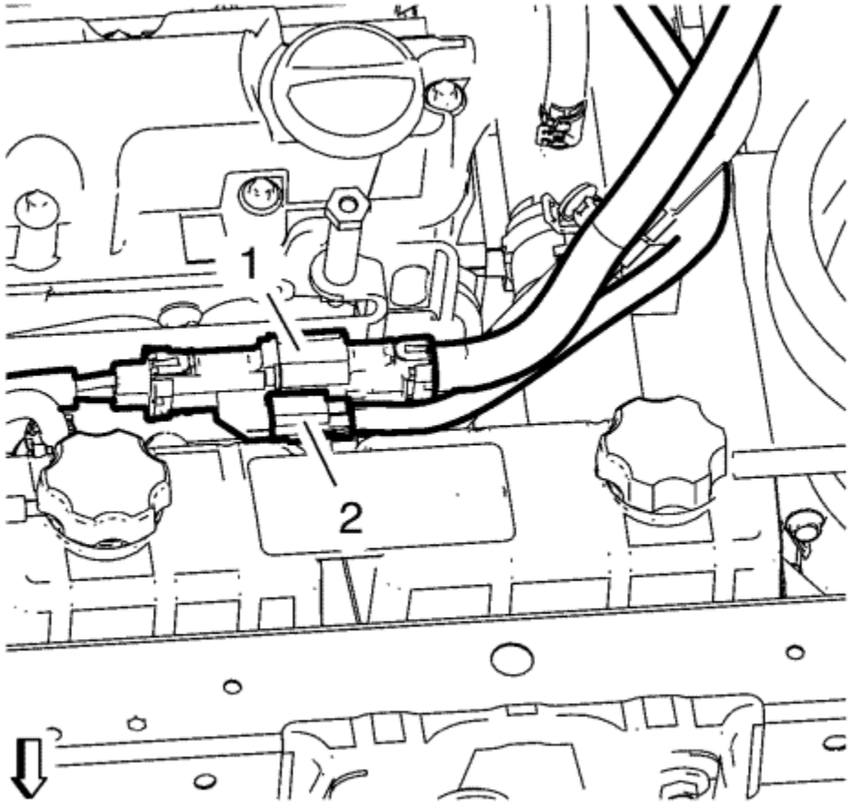

52. Connect the high voltage wiring harness plug (1). Refer to High Voltage Connectors .
53. Connect the wiring harness plug (2). Refer to High Voltage Connectors .

54. Install the EPS power supply cable (2).
55. Install and tighten the EPS power supply cable nut (1).
56. Clip the wiring harness to the transmission.

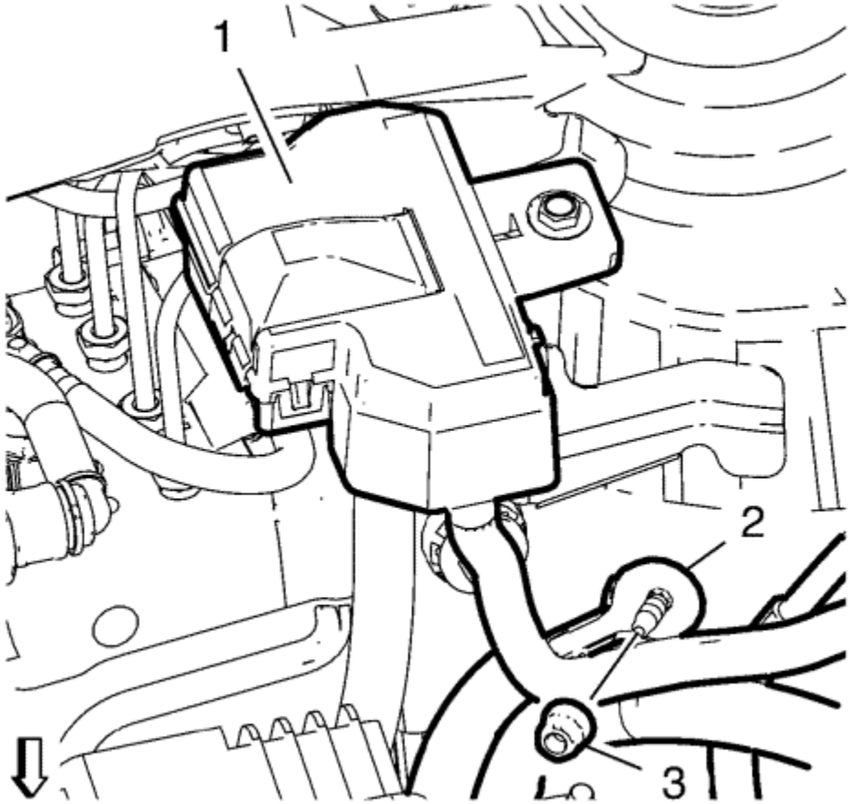

57. Install the EPS ground cable (2).
58. Install and tighten the EPS ground cable nut (3).
59. Install the cover (1).

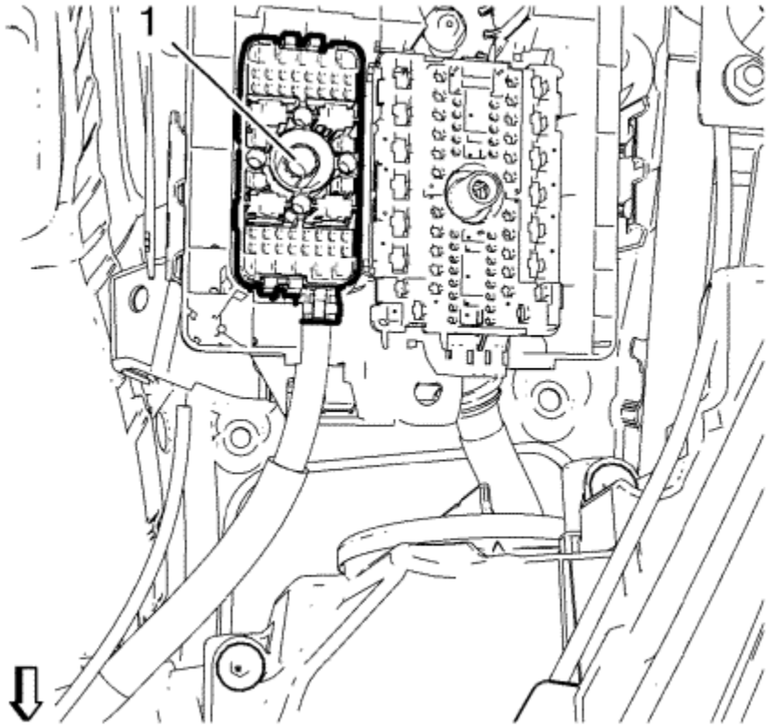

60. Install the wiring harness (1) to the lower part of the accessory wiring junction block.

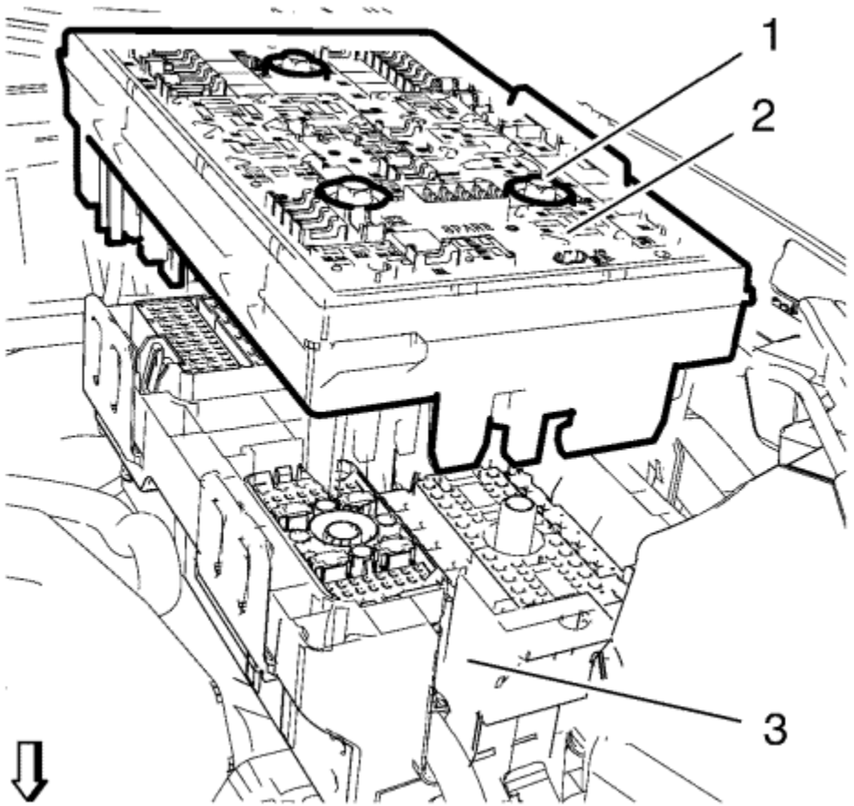

61. Clip the upper part of the accessory wiring junction block (2) to the lower part of the accessory wiring junction block (3).
62. Tighten the 3 bolts (1) of the accessory wiring junction block (2) to **10 N·m(89 lb in)**.

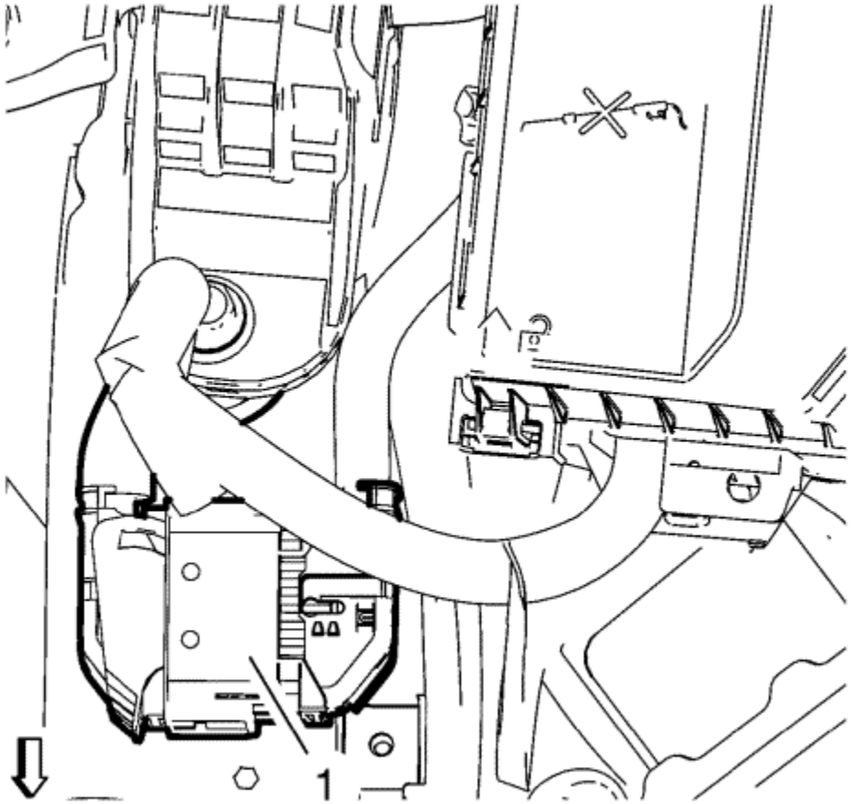

63. Connect the wiring harness plug (1).

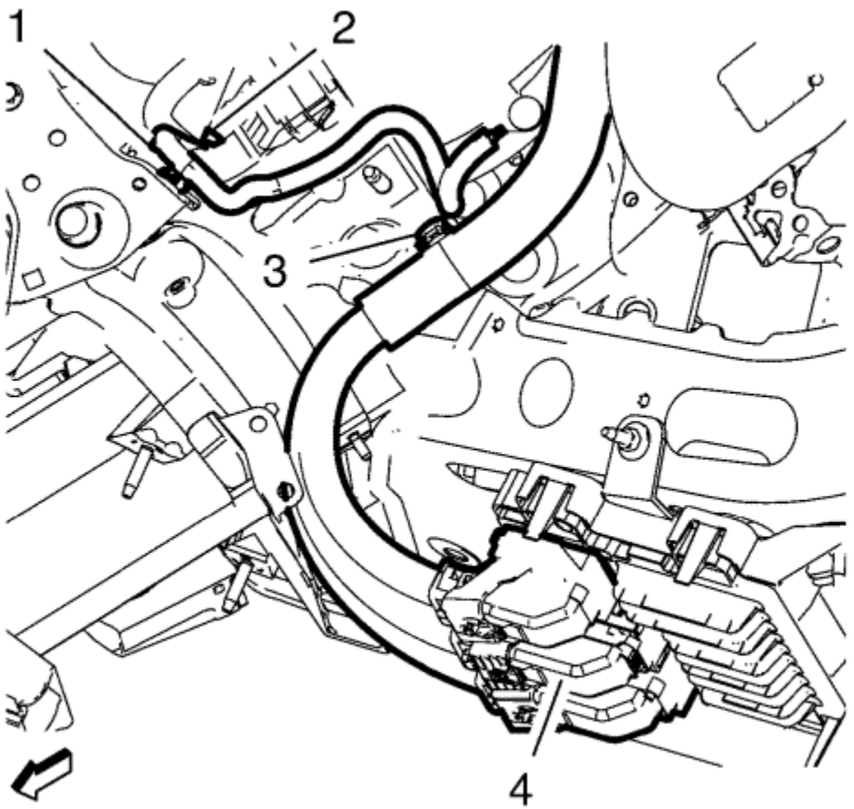

64. Connect 3 ECM wiring harness plugs (4) and install the clip (3).
65. Clip the drive motor power inverter module ground cable clip (3) and close the cable retainer (2).
66. Install the left headlamp. Refer to Headlamp Replacement : Volt → Ampera .

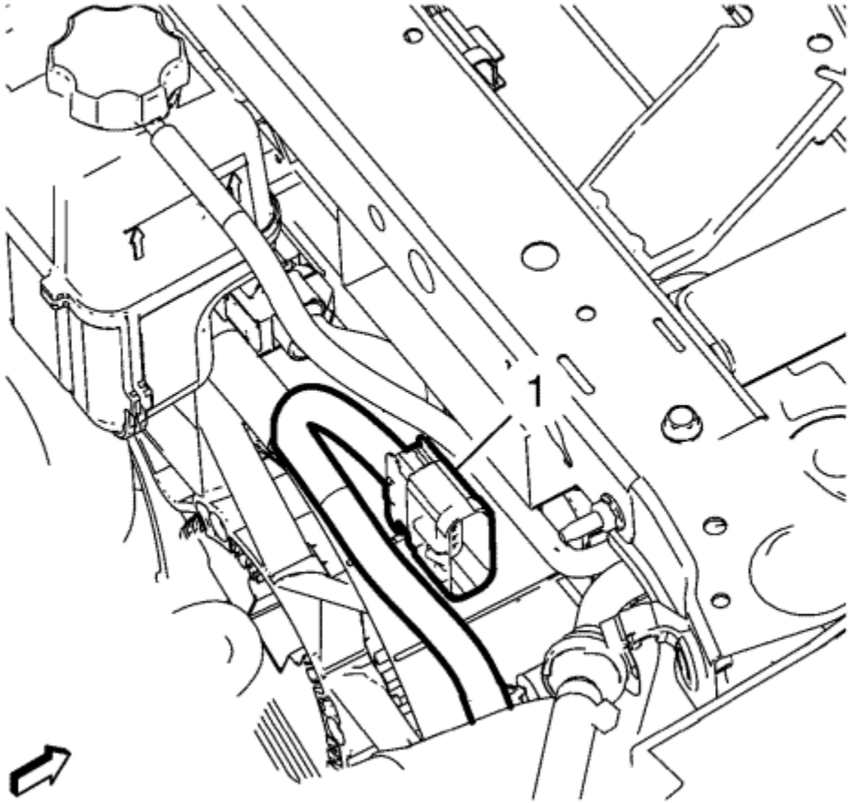

67. Connect and clip in the coolant fan wiring harness plug (1).

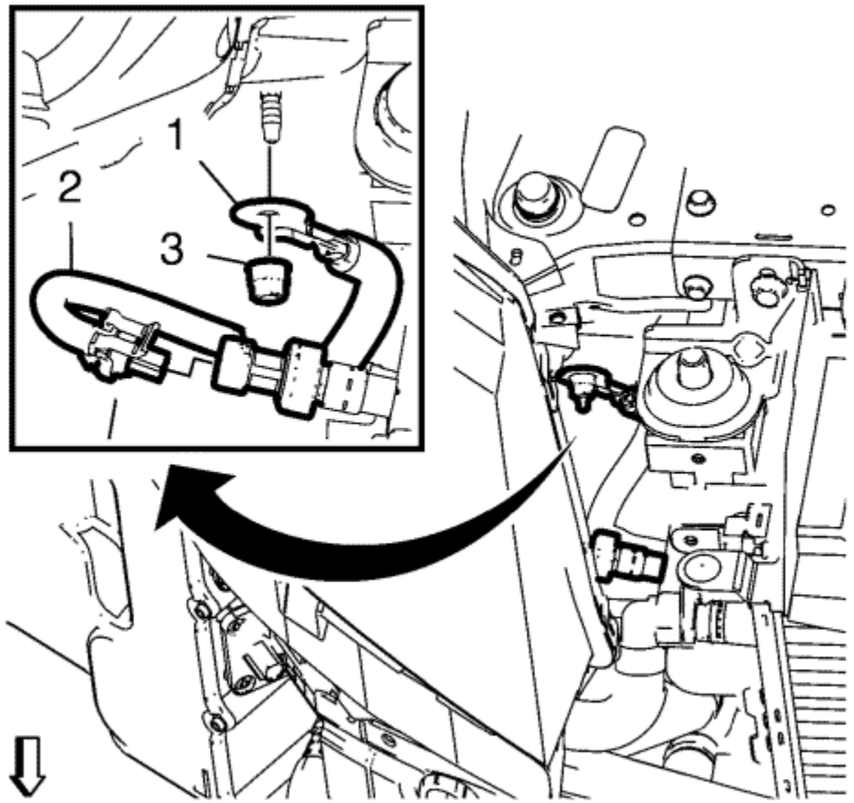

68. Install the ground cable (1) and the ground cable nut (3) and tighten.
69. Connect the A/C pressure sensor wiring harness plug (2).

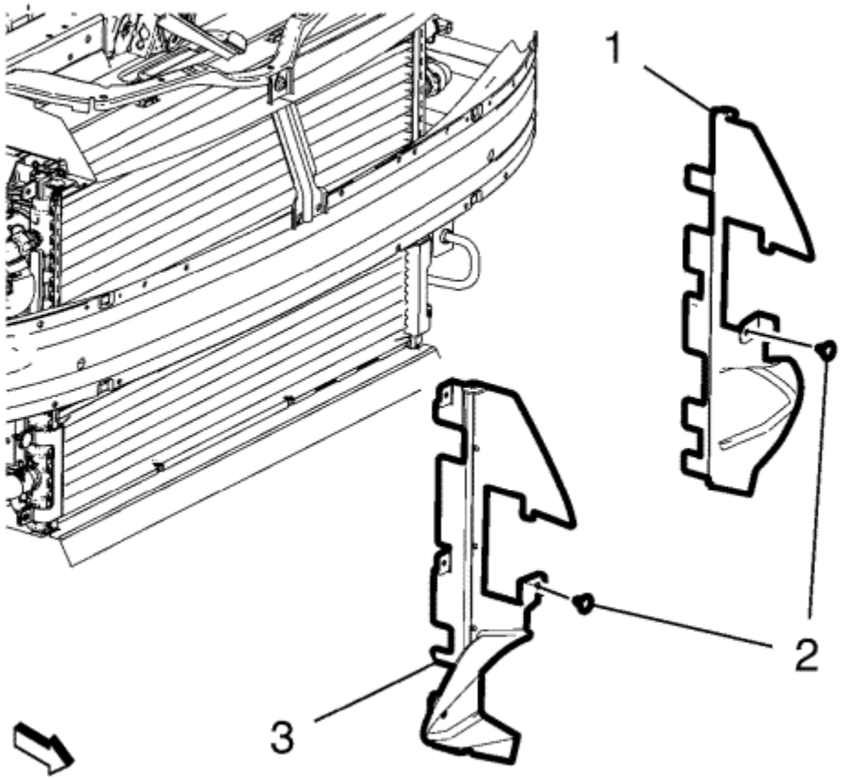

70. Install the left and the right radiator air baffles (1, 3).
71. Install all radiator air baffle clips (2).

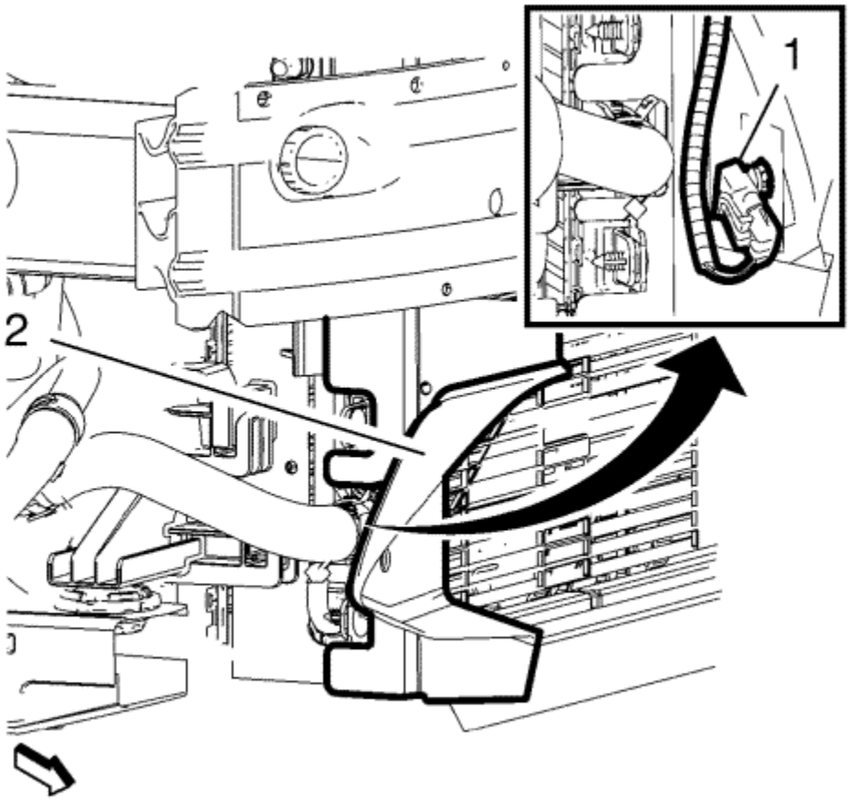

72. Clip in the ambient temperature sensor (1) and the wiring harness to the radiator air baffle (2).

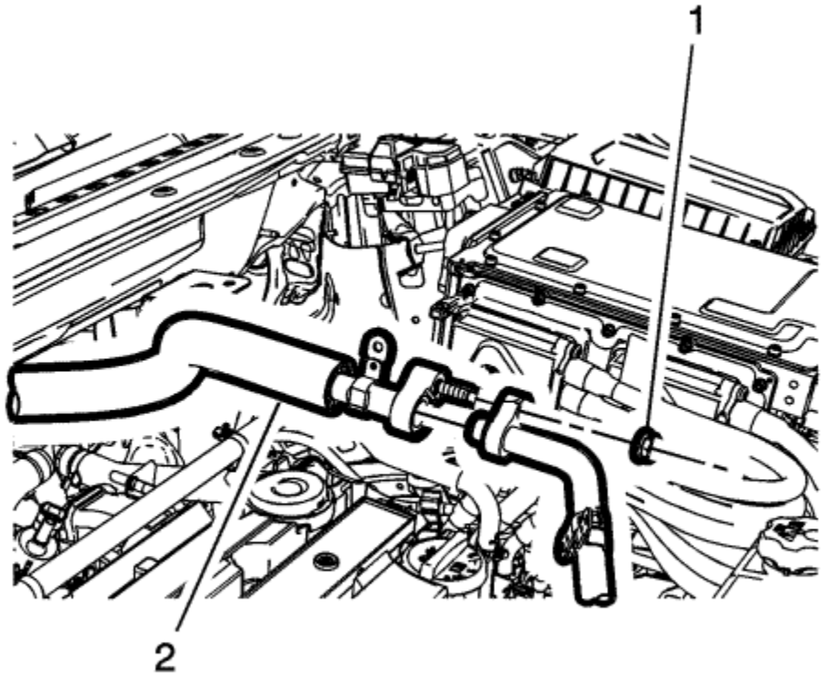

73. Install the air conditioning compressor and evaporator hose (2) at the connection above the valve cover.
74. Install the nut (1) and tighten to **22 N·m(16 lb ft)**.
75. Connect the air conditioning evaporator thermal expansion valve tube to the condenser. Refer to Air Conditioning Evaporator Thermal Expansion Valve Tube Replacement .

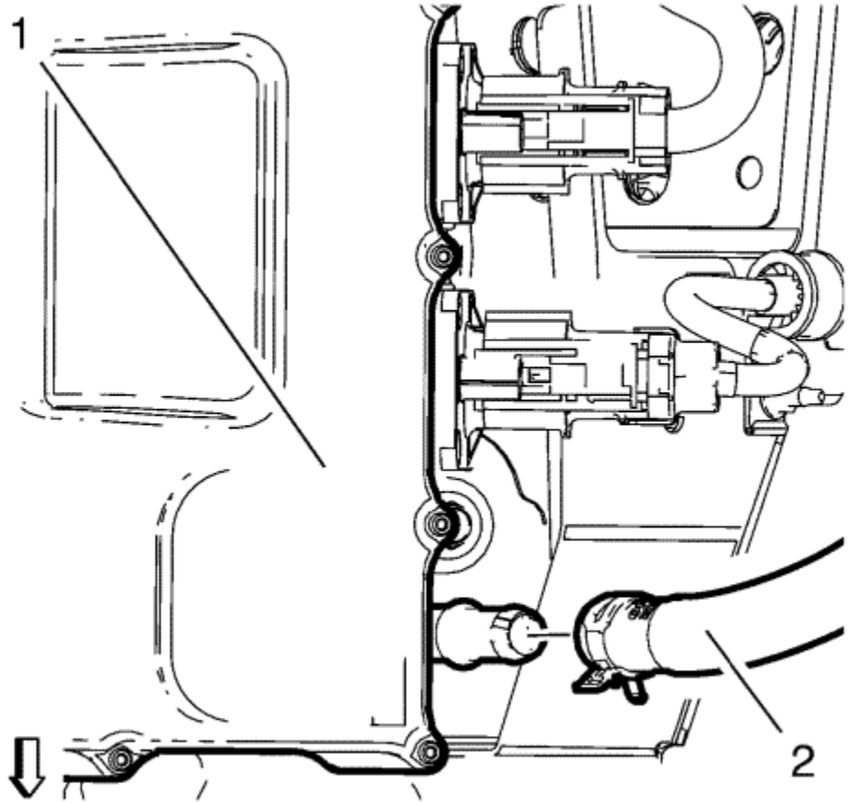

76. Connect the drive motor power inverter module cooling outlet hose (2) to the charger (1).

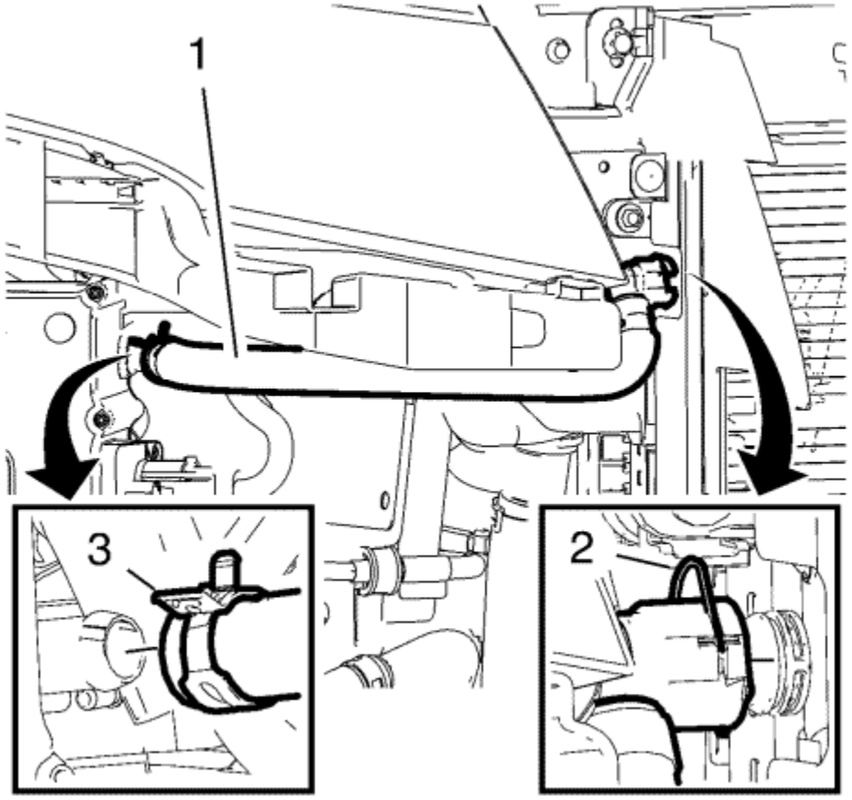

77. Install the drive motor power inverter module coolant radiator hose (1).
78. Lock the connector (2) and fasten the clamp (3).
79. Reposition and tighten the engine coolant reservoir. Refer to Coolant Recovery Reservoir Replacement .

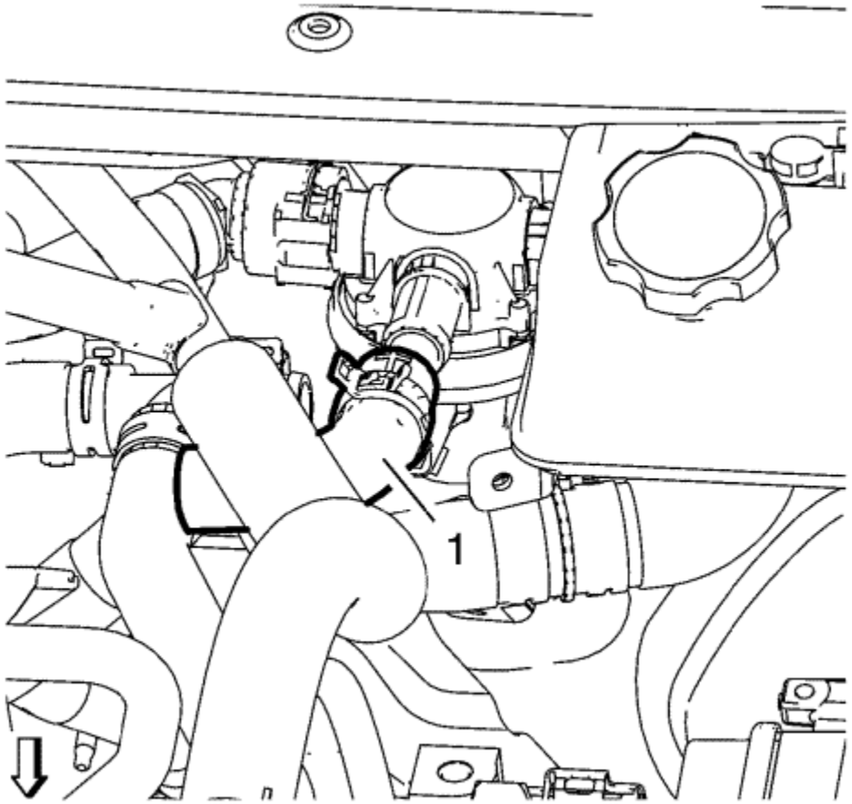

80. Connect the heater water shutoff valve outlet hose (1) to the valve assembly.

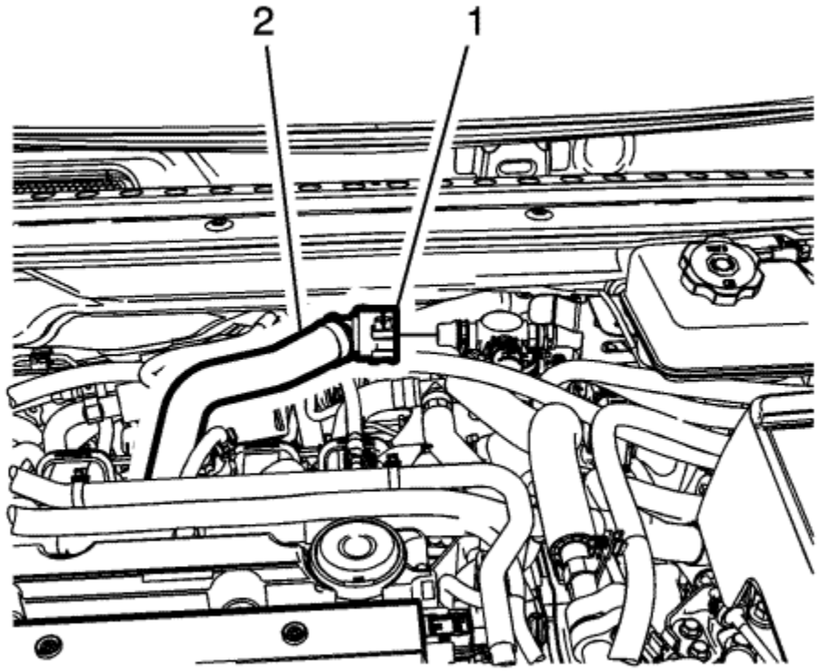

81. Connect the heater water shutoff valve inlet hose (2) to the valve assembly and lock the connector (1).

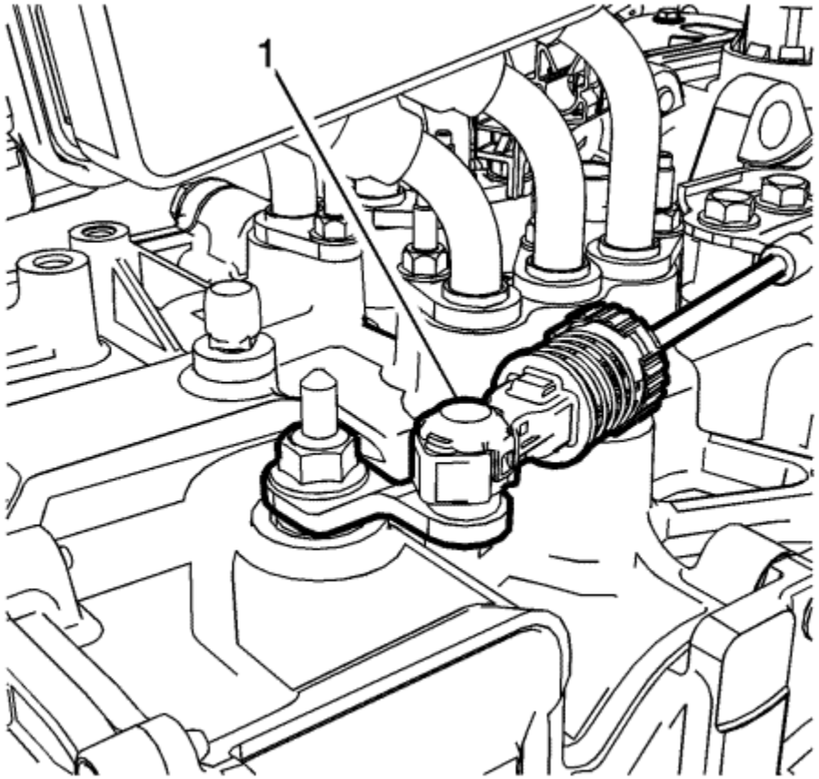

82. Connect the transmission range selector lever cable terminal (1) to the transmission manual pin.

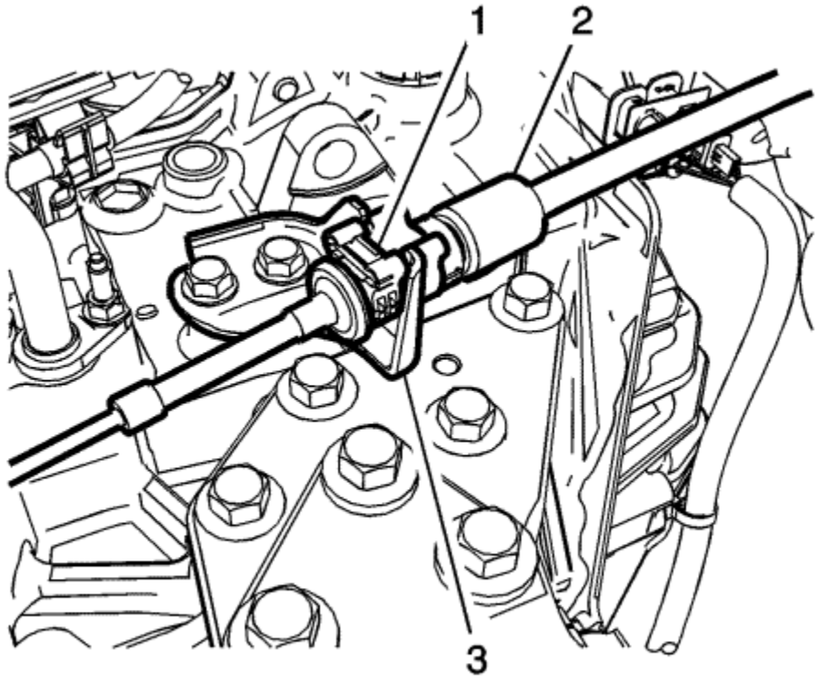

83. Press the locking tab (1) forward in order to lock the transmission range selector lever cable (2) to the cable bracket.

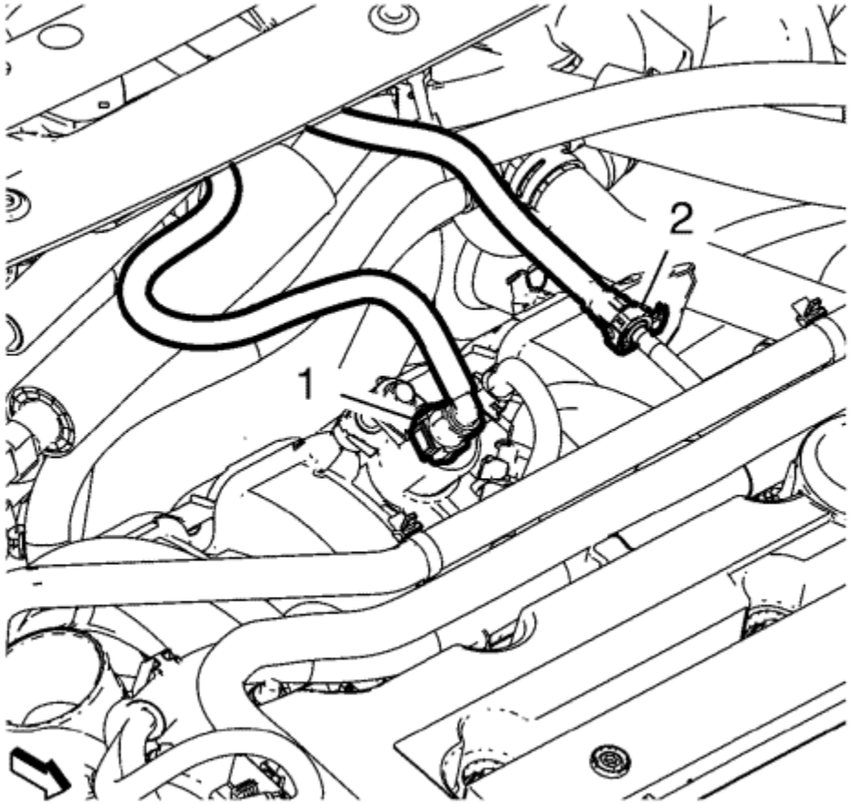

84. Connect the canister purge pipe (1) to the canister purge valve. Refer to Plastic Collar Quick Connect Fitting Service .
85. Connect the fuel feed pipe (2) to the fuel rail assembly. Refer to Plastic Collar Quick Connect Fitting Service .
86. Connect the fuel feed pipe (1) to the fuel rail assembly. Refer to Fuel Feed Pipe Replacement : Chassis → Engine Compartment .
87. Raise the vehicle.

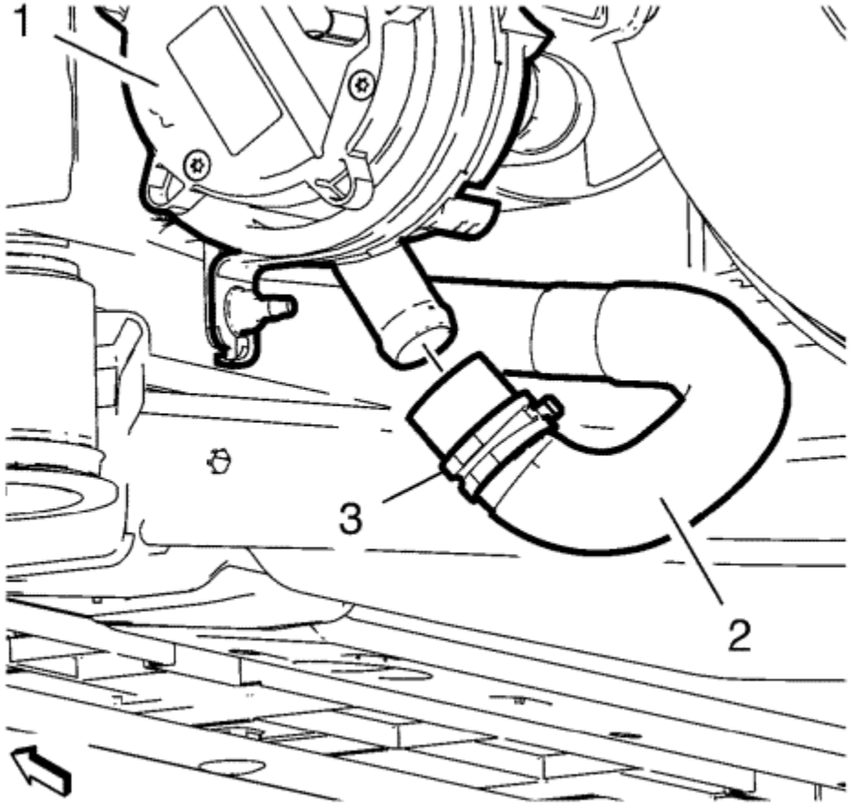

88. Connect the drive motor generator module cooling outlet hose (2) to the drive motor generator module cooling pump (1) and install the clamp (3).

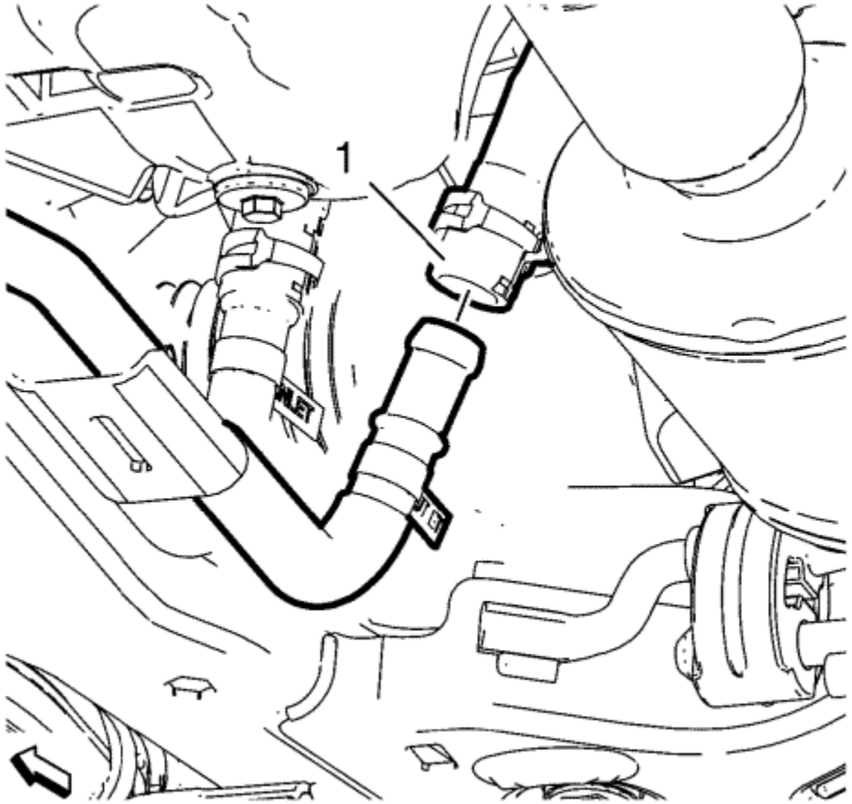

89. Connect the heater water shutoff valve outlet hose (1).

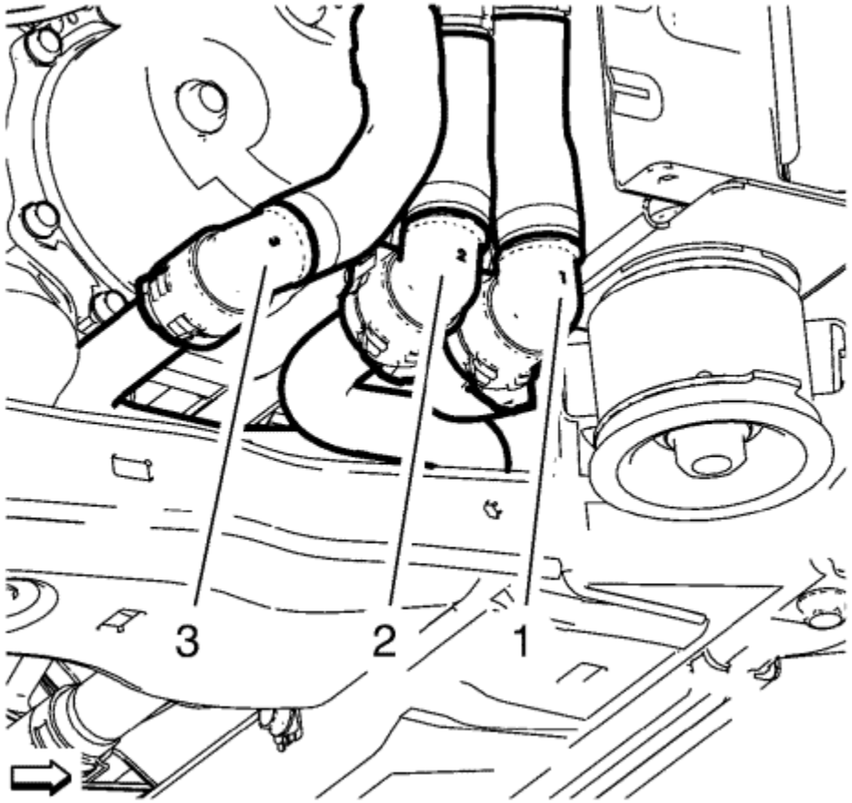

90. Connect the drive motor battery radiator inlet pipe connector (1).
91. Connect the drive motor battery coolant cooler outlet pipe connector (2).
92. Connect the drive motor battery coolant cooler inlet pipe connector (3).
93. Install both front wheelhouse liners. Refer to Front Wheelhouse Front Liner Replacement .
94. Install the front bumper fascia. Refer to Front Bumper Fascia Removal and Installation : Volt → Ampera .
95. Lower the vehicle.
96. Install the air cleaner resonator outlet duct. Refer to Air Cleaner Resonator Outlet Duct Replacement .
97. Install the air cleaner assembly. Refer to Air Cleaner Assembly Replacement .

    Note: High voltage system stays disabled.

98. Install the drive motor generator power inverter module. Refer to Drive Motor Generator Power Inverter Module Replacement .
99. Fill the engine cooling system. Refer to Cooling System Draining and Filling .
100. Fill the drive motor generator battery cooling system. Refer to Drive Motor Battery Cooling System Draining and Filling .
101. Fill the drive motor generator cooling system. Refer to Drive Motor Generator Power Inverter Module Cooling System Draining and Filling .
102. Charge the air conditioning system. Refer to Refrigerant Recovery and Recharging : High Voltage Electric Compressor .

103. Check engine oil level. Refer to Engine Oil and Oil Filter Replacement .

Danger: Always perform the High Voltage Disabling procedure prior to servicing any High Voltage component or connection. Personal Protection Equipment (PPE) and proper procedures must be followed.

The High Voltage Disabling procedure will perform the following tasks:

- Identify how to disable high voltage.
- Identify how to test for the presence of high voltage.
- Identify condition under which high voltage is always present and personal protection equipment (PPE) and proper procedures must be followed.

Failure to follow the procedures exactly as written may result in serious injury or death.

104. Enable the high voltage system. Refer to High Voltage Enabling .
105. Connect the intermediate steering shaft to the steering gear. Refer to Intermediate Steering Shaft Replacement .
106. Check and correct transmission fluid level. Refer to Transmission Fluid Level and Condition Check .

&#169© Copyright Chevrolet. All rights reserved

Engine Oil and Oil Filter Replacement

Removal Procedure

Danger: Do not use a service jack in locations other than those specified to lift this vehicle. Lifting the vehicle with a jack in those other locations could cause the vehicle to slip off the jack and roll; this could cause injury or death.

1. Raise and support the vehicle. Refer to Lifting and Jacking the Vehicle .
2. Place a drain pan under the sump drain plug.

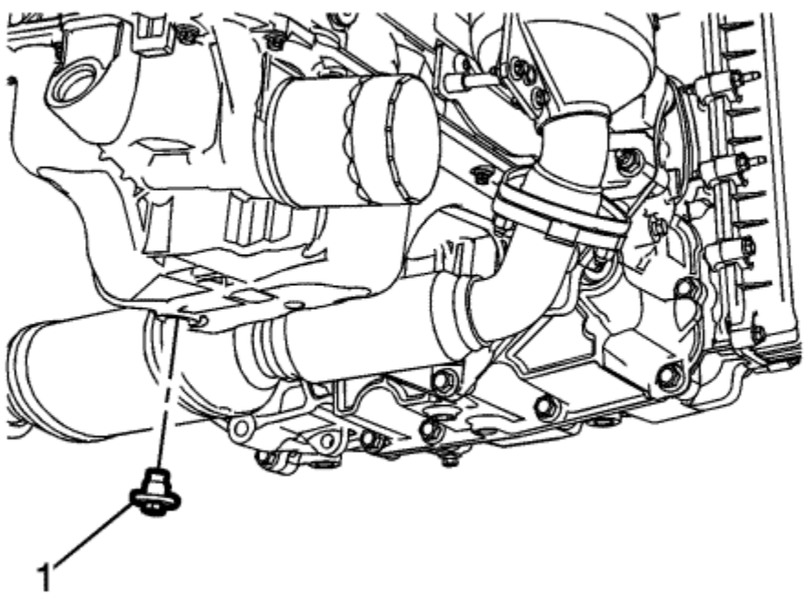

3. Remove the sump drain plug (1), and allow the oil to drain completely.

Caution: Refer to Fastener Caution in the Preface section.

4. Install the oil sump drain plug and tighten to **14 N·m (124 lb in)**.

   Warning: Refer to Hot Exhaust System Warning in the Preface section.

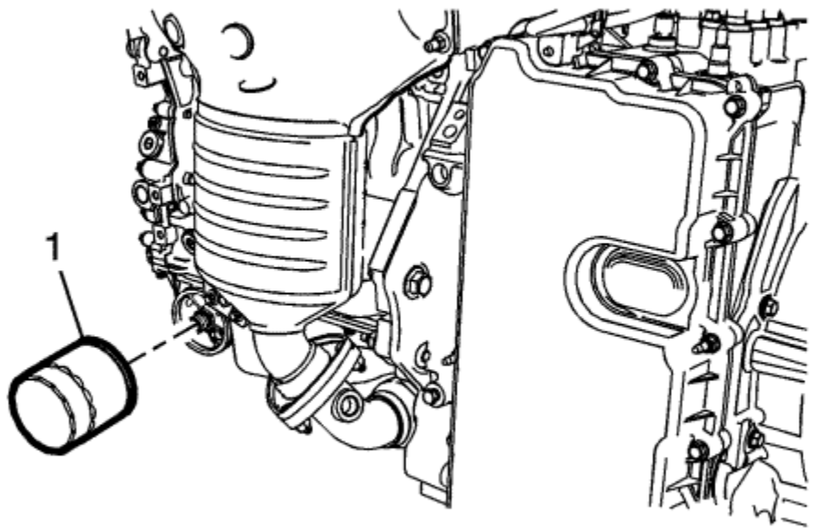

5. Place the drain pan under the oil filter (1).
6. Remove the oil filter. Allow the oil to drain completely.

Installation Procedure

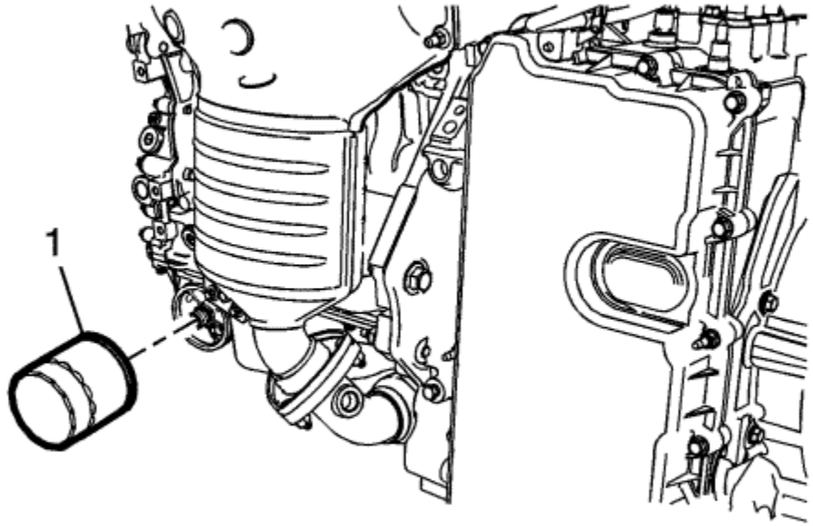

1. Lubricate the NEW oil filter gasket with clean engine oil.
2. Tighten the oil filter (1) to **25 N·m (18 lb ft)**.
3. Lower the vehicle.
4. Refill the engine oil. Refer to Approximate Fluid Capacities .
5. Start the engine and inspect for leaks.
6. Reset the oil life monitor.

© Copyright Chevrolet. All rights reserved

Camshaft Cover Replacement

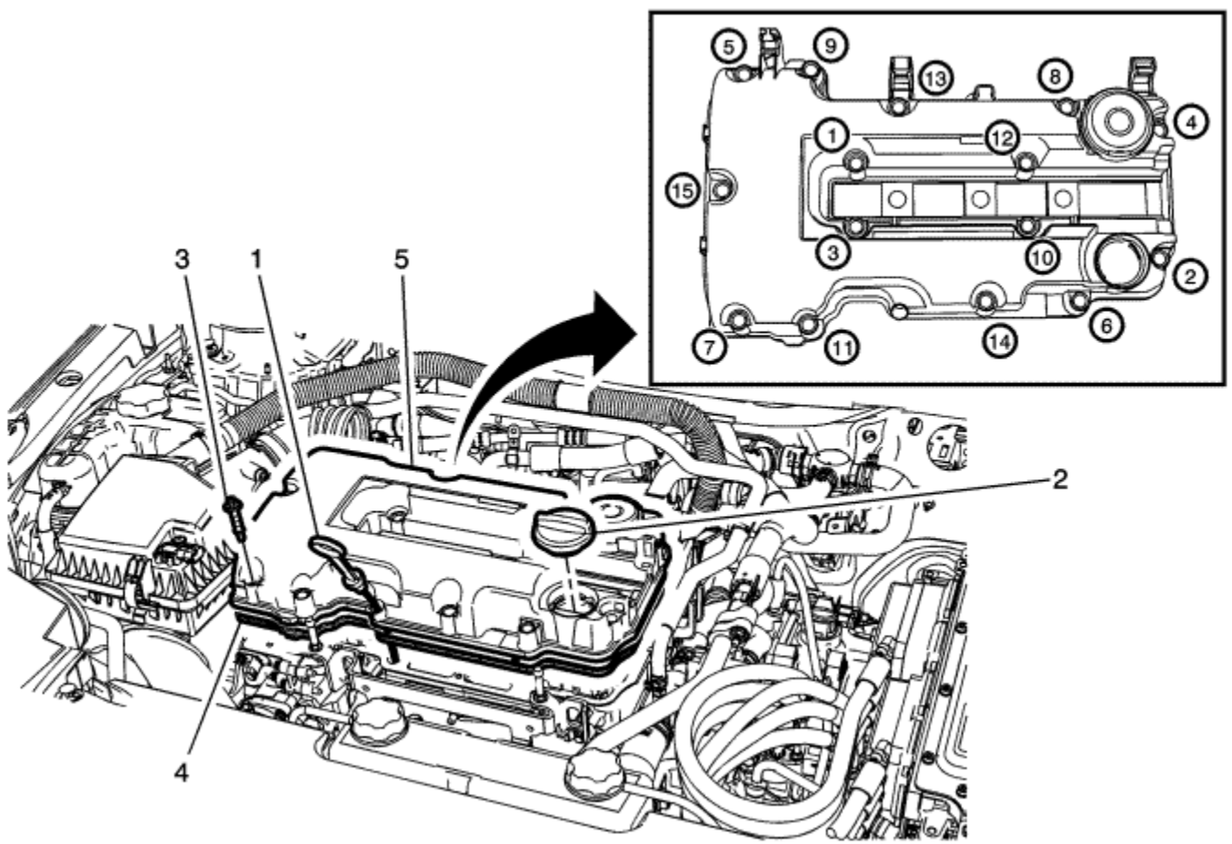

Callout	Component Name
Preliminary Procedure Remove the ignition coil. Refer to Ignition Coil Replacement .	
1	Remove the oil level indicator
2	Remove the oil cap

3	Camshaft Cover Fastener (Qty: 15) **Caution:** Refer to Fastener Caution in the Preface section. **Procedure** Ensure to follow the tighten sequence shown. **Tighten** 8 N·m (71 lb in)
4	Camshaft Cover Gasket **Procedure** Do not reuse the camshaft gasket. Also use a new gasket when removing or replacing camshaft cover.
5	Camshaft Cover **Procedure** 1. Remove or reposition the clips as necessary. 2. Disconnect electrical connector as necessary. 3. Transfer components as necessary.

© Copyright Chevrolet. All rights reserved

Inlet Camshaft Replacement

Removal Procedure

1. Remove the camshaft sprocket. Refer to Camshaft Inlet and Exhaust Sprocket Replacement .

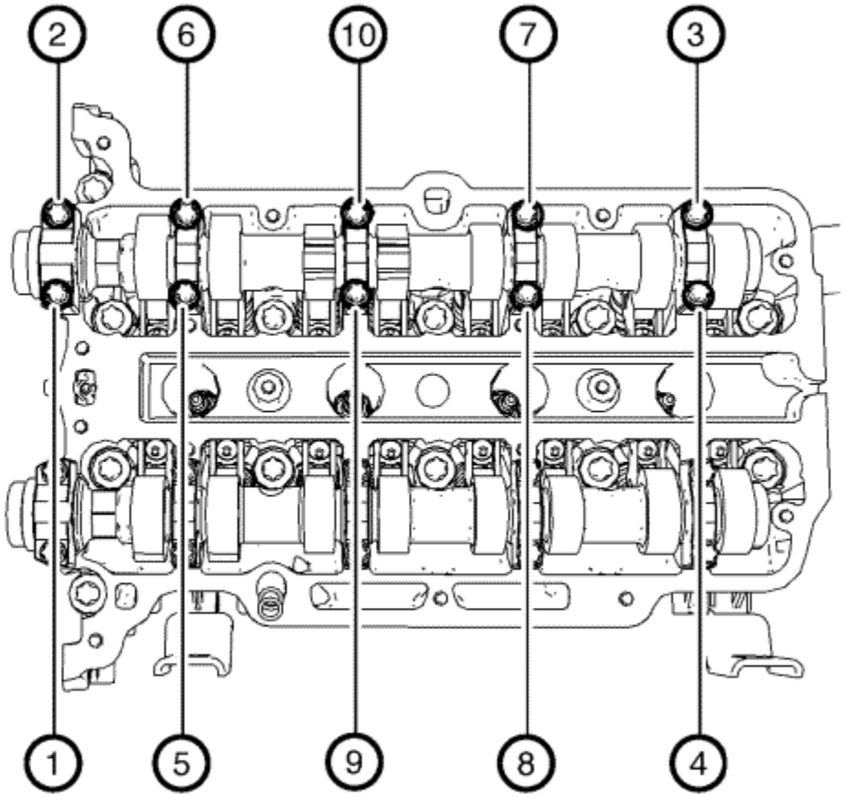

2. Remove the camshaft bearing cap bolts in sequence shown. Ensure to remove the bolts one turn at a time until there is no spring tension pushing on the camshaft.

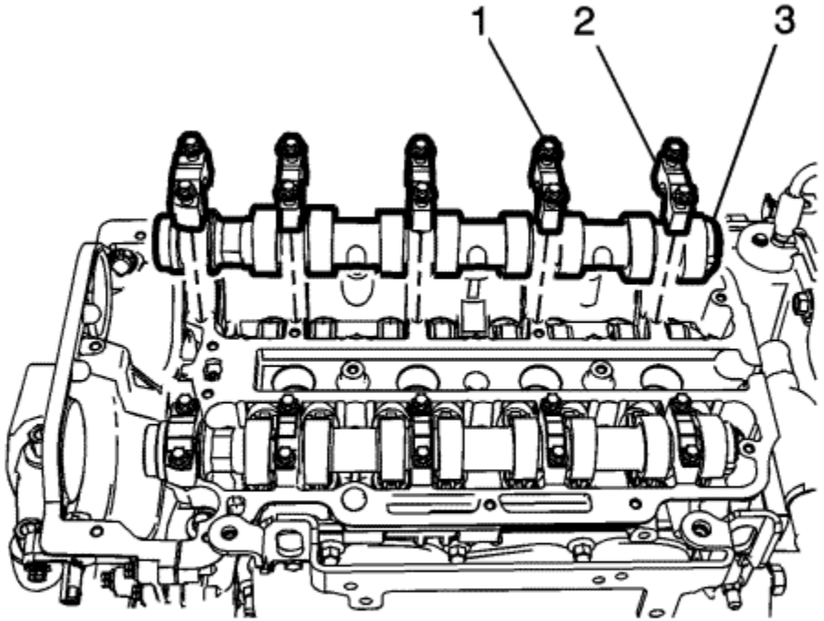

3. Remove the camshaft bearing cap bolts (1).
4. Remove the camshaft bearing caps (2).
5. Remove the inlet camshaft (3).

Installation Procedure

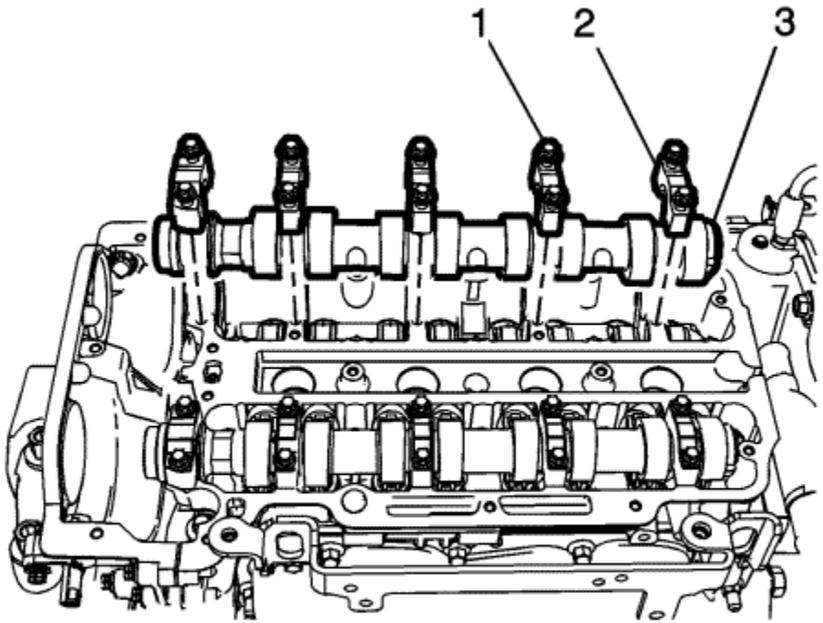

Note: Ensure that the camshaft sealing rings are in place in the camshaft grooves. Camshaft sealing rings must be in place below the surface of the camshaft journal in order to avoid being pinched between the cylinder head and the camshaft caps.

1. Lubricate the camshaft and camshaft bearing caps with engine oil.
2. Install the inlet camshaft (3).
3. Install the camshaft bearing caps (2).

Caution: Refer to Fastener Caution in the Preface section.

4. Install the camshaft bearing cap and hand tighten the bolts (1).

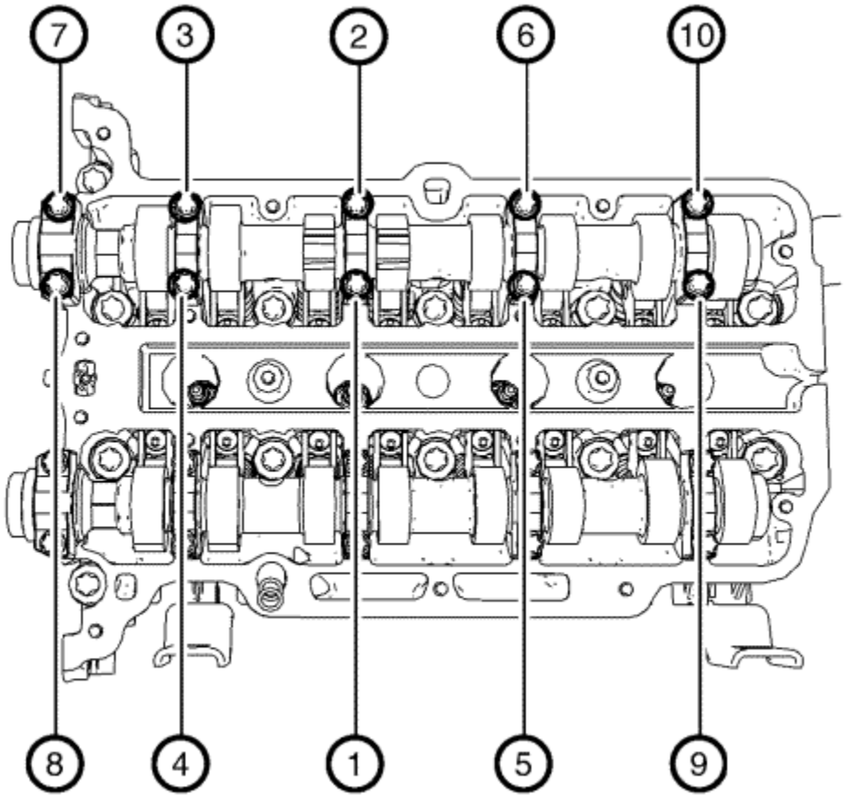

5. Install and tighten the camshaft bearing cap bolts one turn at a time in sequence as shown to **8 N·m (71 lb in)**.
6. Install the camshaft intake sprocket. Refer to Camshaft Inlet and Exhaust Sprocket Replacement .

© Copyright Chevrolet. All rights reserved

Exhaust Camshaft Replacement

Removal Procedure

1. Remove the camshaft exhaust sprocket. Refer to Camshaft Inlet and Exhaust Sprocket Replacement .

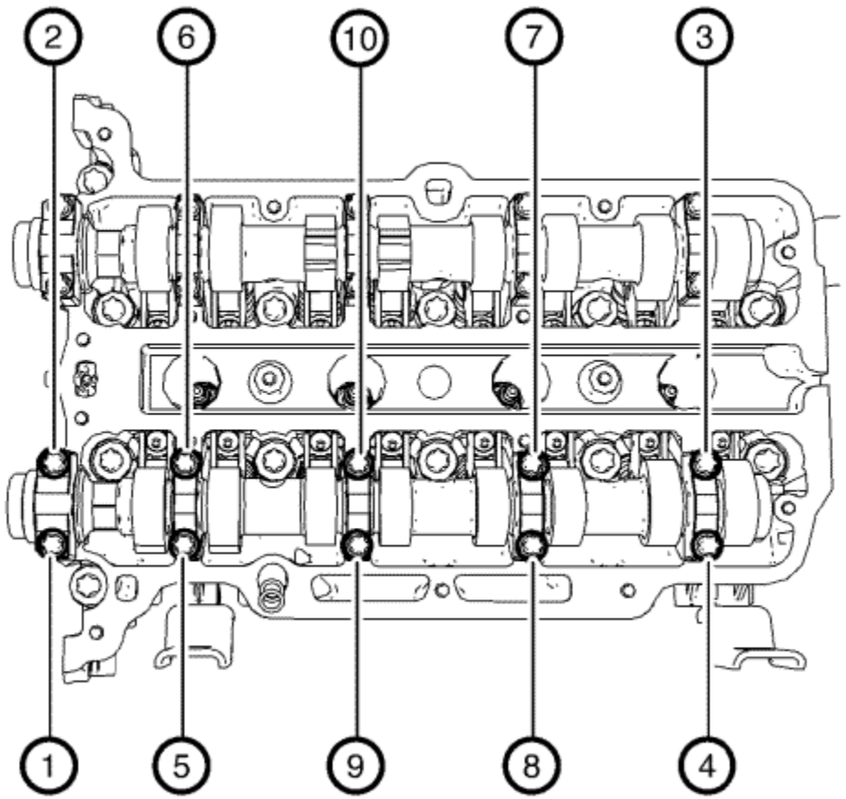

2. Remove the camshaft bearing cap bolts in sequence shown. Ensure to remove the bolts one turn at a time until there is no spring tension pushing on the camshaft.

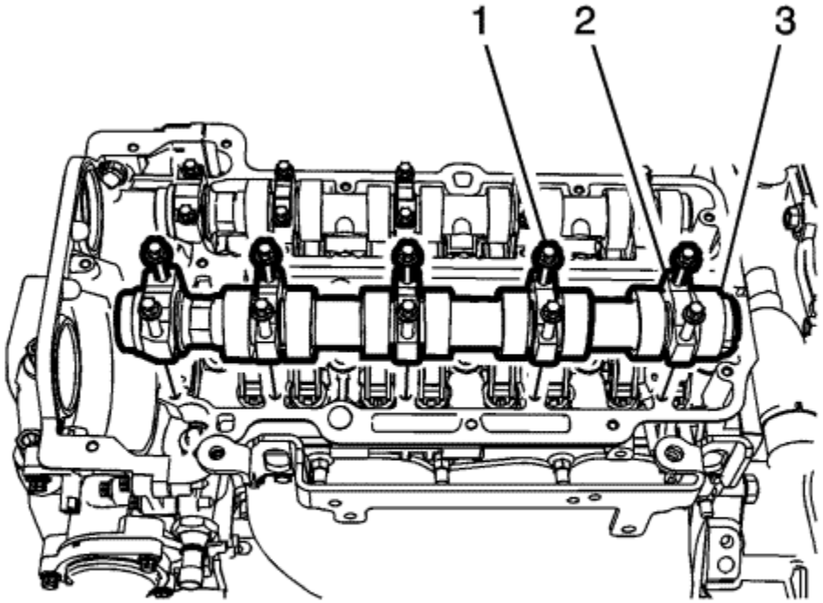

3. Remove the camshaft bearing cap bolts (1).
4. Remove the camshaft bearing caps (2).
5. Remove the exhaust camshaft (3).

Installation Procedure

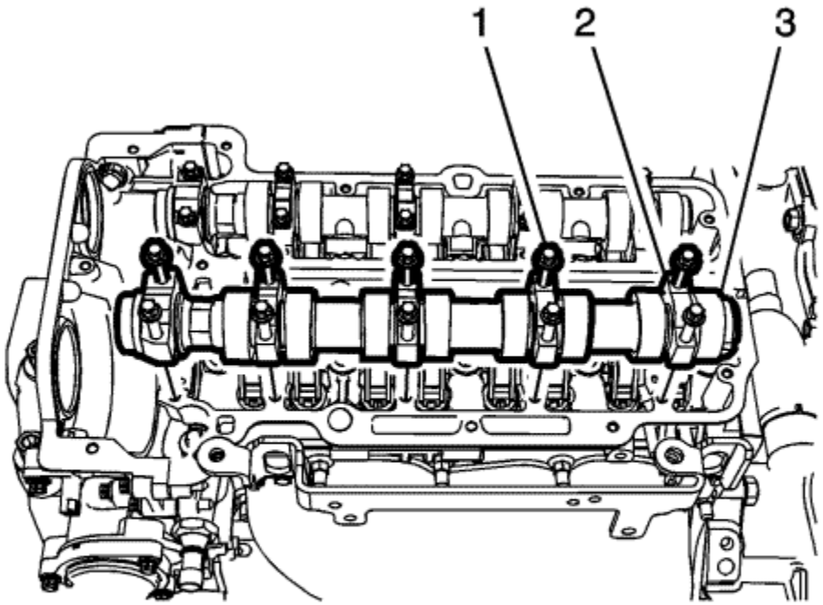

Note: Ensure that the camshaft sealing rings are in place in the camshaft grooves. Camshaft sealing rings must be in place below the surface of the camshaft journal in order to avoid being pinched between the cylinder head and the camshaft caps.

1. Lubricate camshaft and camshaft bearing caps with engine oil.
2. Install the exhaust camshaft (3).
3. Install the camshaft bearing caps (2).

Caution: Refer to Fastener Caution in the Preface section.

4. Install the camshaft bearing cap and hand tighten the bolts (1).

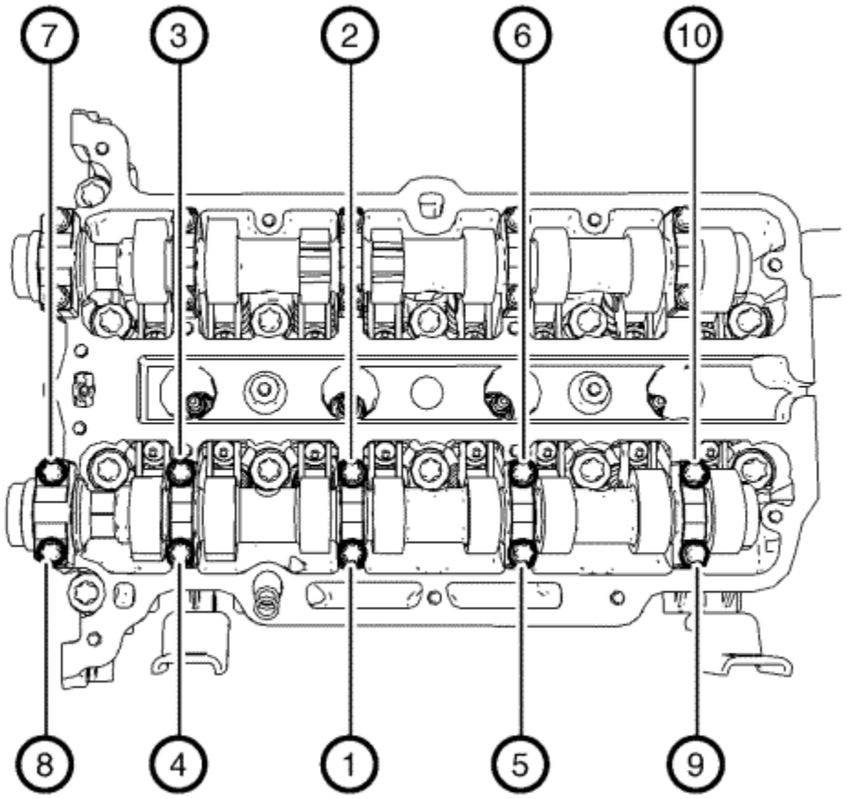

5. Install and tighten the camshaft bearing cap bolts one turn at a time in sequence as shown **8 N·m (71 lb in)**.
6. Install the camshaft exhaust sprocket. Refer to Camshaft Inlet and Exhaust Sprocket Replacement .

© Copyright Chevrolet. All rights reserved

Valve Stem Oil Seal and Valve Spring Replacement

Special Tools

- *EN-958* Installer
- *EN-6086* Basic Kit, Spring and Wedge Replacer
- *EN-840* Pliers / Remover
- *EN-952* Fixing Pin

For equivalent regional tools, refer to Special Tools .

Removal Procedure

1. Raise and support the vehicle. Refer to Lifting and Jacking the Vehicle .
2. Remove the right front wheel house liner. Refer to Front Wheelhouse Rear Liner Replacement .
3. Lower the vehicle.
4. Remove the hydraulic valve clearance adjuster arms. Refer to Hydraulic Valve Clearance Adjuster Arm Replacement .
5. Remove the spark plugs. Refer to Spark Plug Replacement .
6. Adjust the engine to TDC of cylinder 1 and fix the crankshaft. Refer to Camshaft Timing Chain Adjustment .

Inlet Valve Stem Oil Seal Removal Cylinder 1

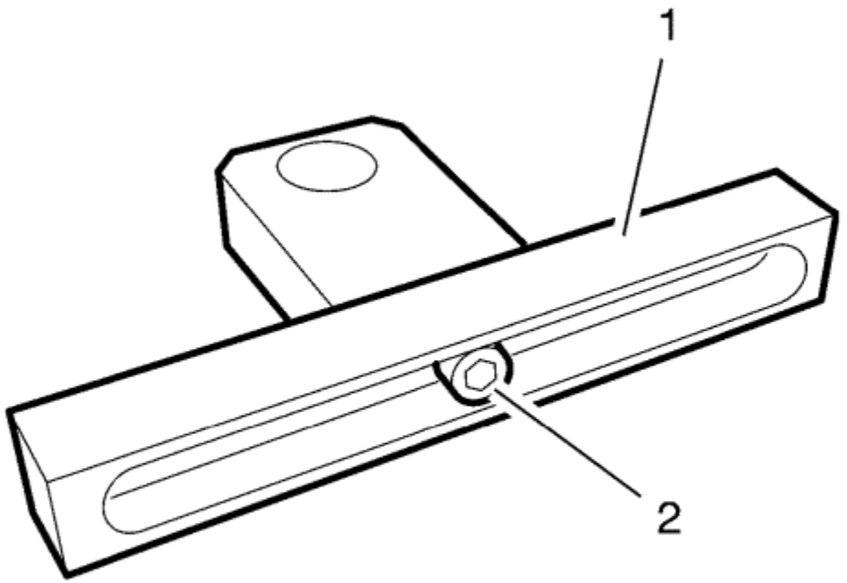

1. Prepare the 2 *EN-6086-6* supports (1) for the installation by tightening the support head in a centred position to the rail with the bolt (2).

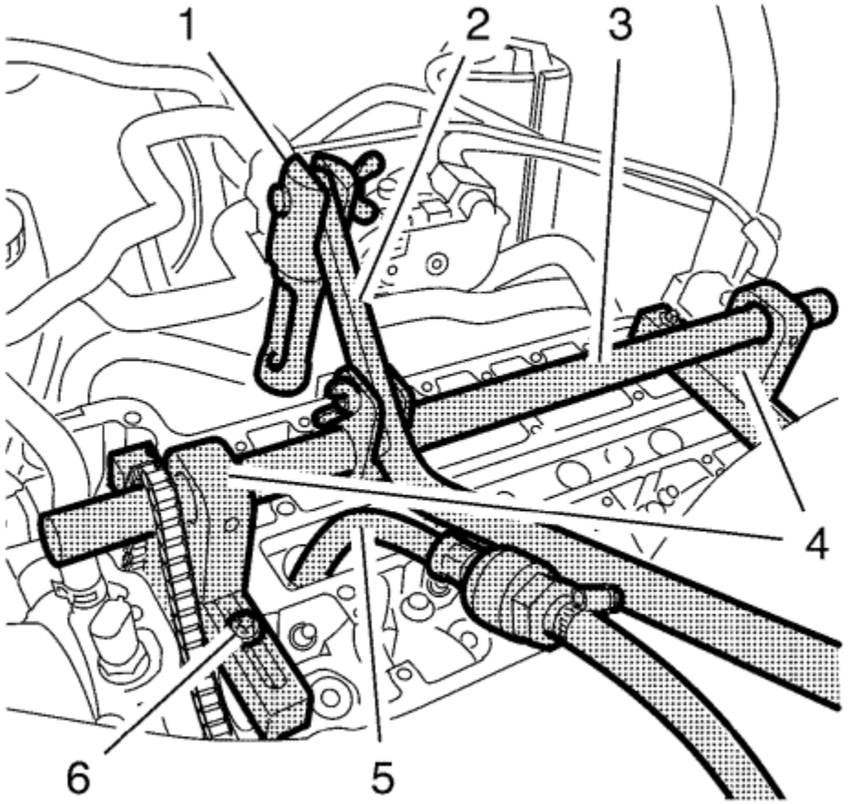

2. Install the *EN-6086-5* mounting shaft (3) along with the 2 *EN-6086-6* supports (4) and the *EN-6086-8* handle to the cylinder head.

   Note: The demounting piece must point to the inlet side.

3. Install the *EN-6086-7* lever (2) along with the *EN-6086-11* demounting piece (1) to the mounting shaft.
4. Position the mounting shaft centred above the spark plug bores and tighten the 4 fasteners (6).
5. Install the *EN-6086-15* pneumatic adapter (5) to the spark plug screw bore of cylinder 1.
6. Apply air pressure to cylinder 1.

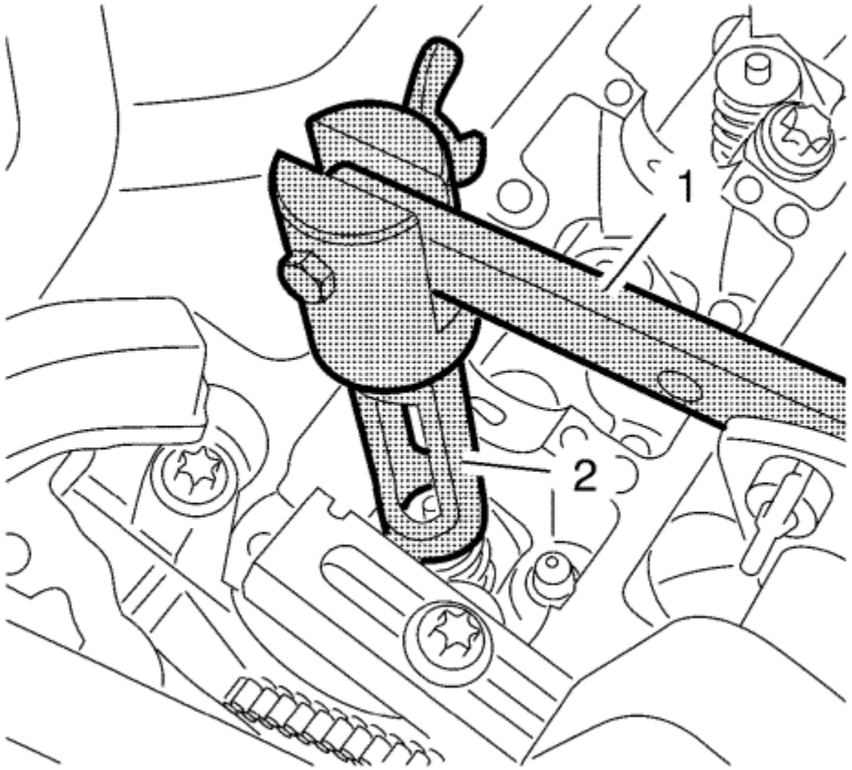

7. Remove the valve keys, valve spring retainers and the valve springs of the intake valves of cylinder 1, using the following procedure:

   Caution: The demounting piece part of EN-6086 Basic Kit, Spring and Wedge Replacer must be applied parallel to the valve retainers in order to prevent damage to the tools or the valve train components. If demounting piece is not applied parallel it could cause damage to the valve stem keys or the valve retainers.

   7.1. Apply tension to the valve springs, using the *EN-6086-7* lever (1) and the *EN-6086-11* demounting piece (2) until the valve keys are discharged from spring load and remove the valve keys.
   7.2. Release tension from the valve springs and remove the valve spring retainers and the valve springs.

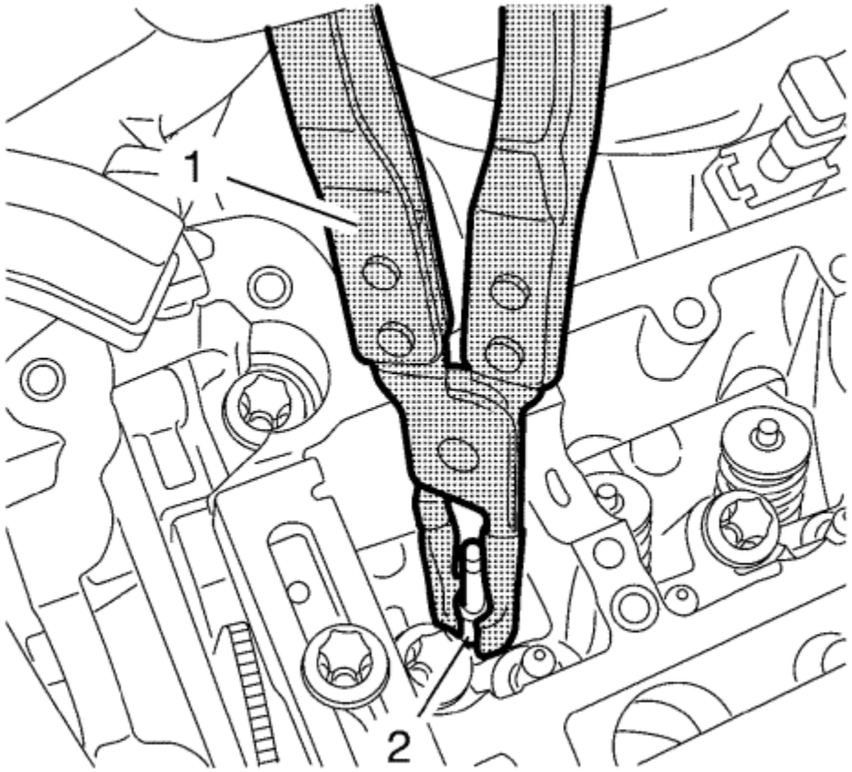

8. Remove the inlet valve stem oil seals (2) of cylinder 1, using the *EN-840* pliers (1).

Inlet Valve Stem Oil Seal Installation Cylinder 1

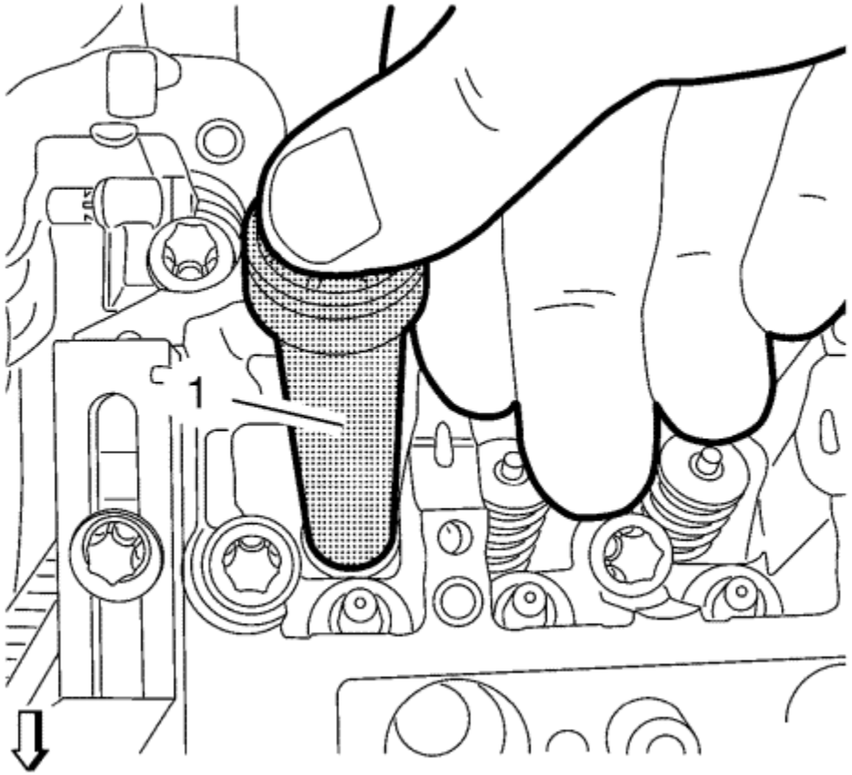

Note: Lubricate the NEW inlet valve stem oil seals with clean engine oil.

1. Install the NEW inlet valve stem oil seals of cylinder 1, using the *EN-958* installer (1).

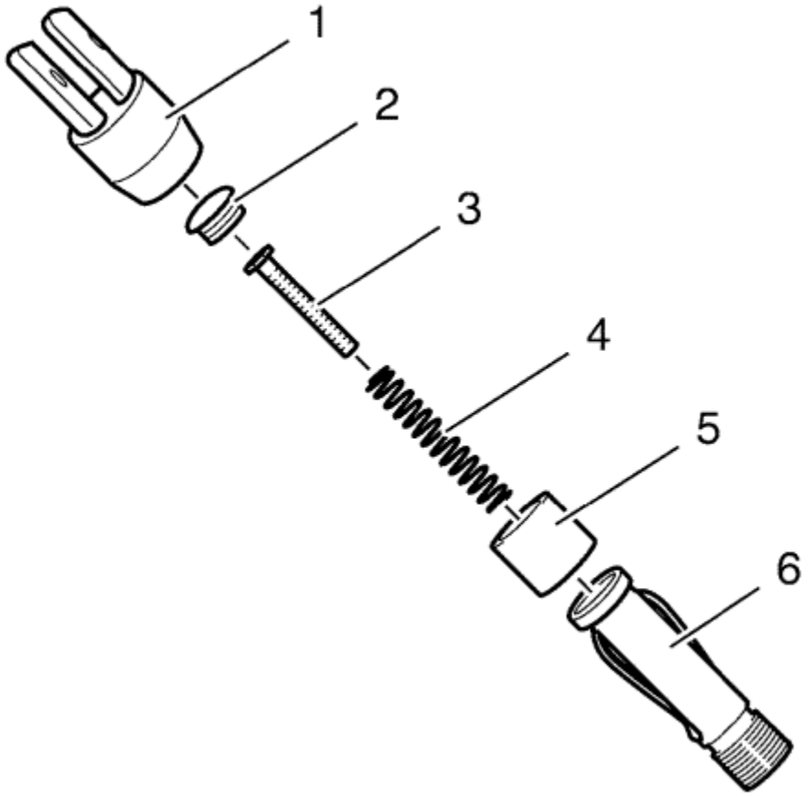

2. Prepare the *EN-6086-200-1* mounting piece for the valve key installation. The mounting piece must be assembled in the following order:
   2.1. Support (6)
   2.2. Bushing (5)
   2.3. Spring (4)
   2.4. *EN-6086-200-10* plunger (3)
   2.5. Screw Connection (2)
   2.6. Lever Adapter (1)

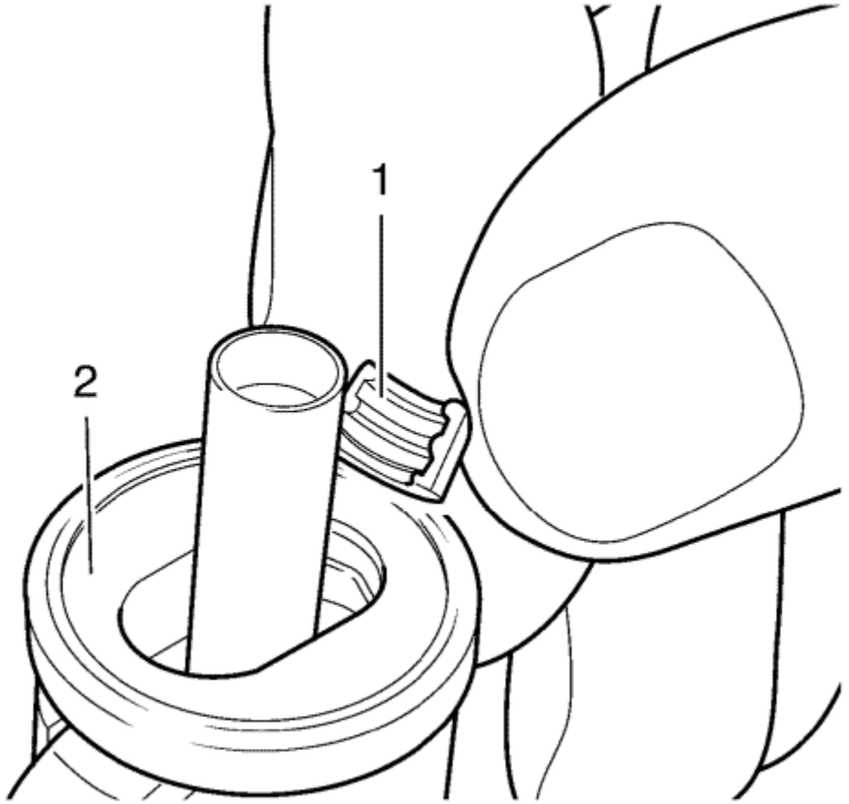

3. Install the valve keys (1) to the mounting piece (2) and fix them with the bushing.

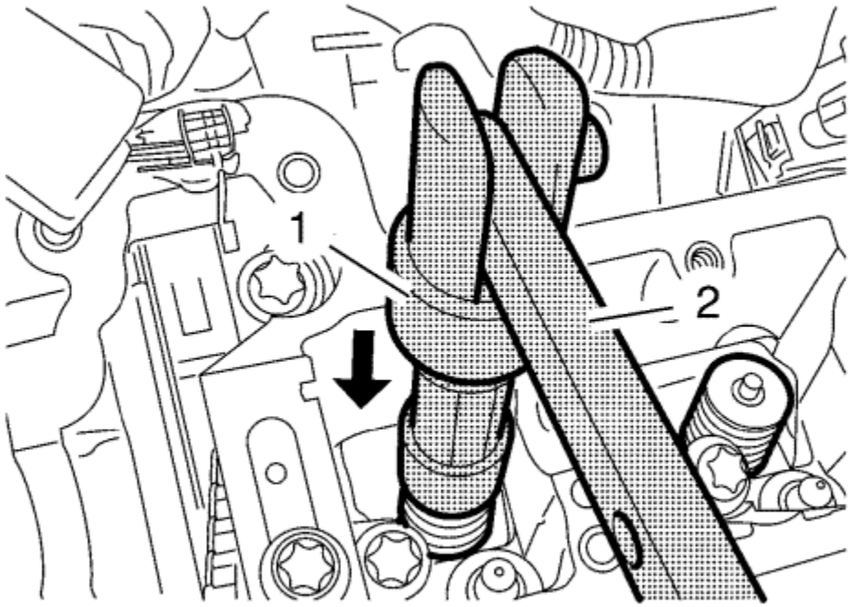

4. Install the inlet valve springs, the inlet valve spring retainers and the inlet valve keys, using the following procedure:
   4.1. Replace the *EN-6086-11* demounting piece with the assembled *EN-6086-200-1* mounting piece (1).
   4.2. Install the inlet valve springs and the inlet valve spring retainers to the cylinder head.

Caution: The demounting piece part of EN-6086 Basic Kit, Spring and Wedge Replacer must be applied parallel to the valve retainers in order to prevent damage to the tools or the valve train components. If demounting piece is not applied parallel it could cause damage to the valve stem keys or the valve retainers.

Note: The cone side of the valve keys must point to the valve stem.

   4.3. Push down the mounting piece (1) using the lever (2) until the valve keys are audible engaged.

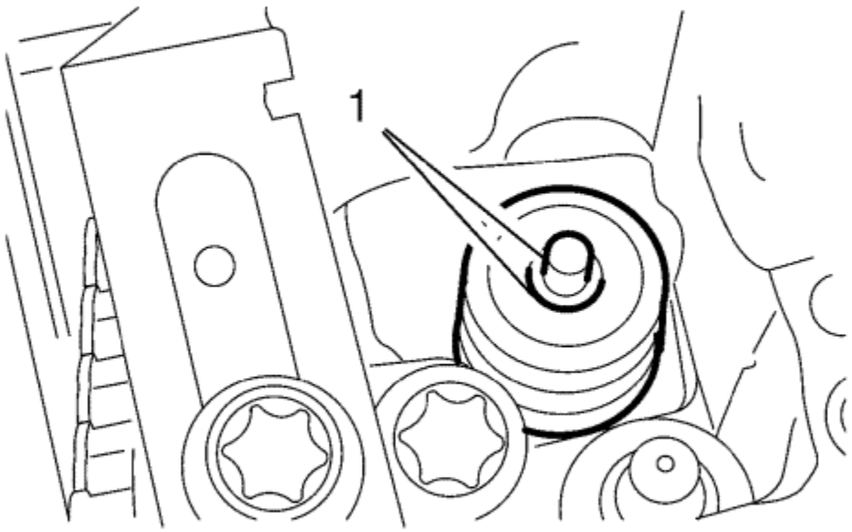

4.4. Inspect the inlet valve keys (1) for proper seating.

Exhaust Valve Stem Oil Seal Removal Cylinder 1

Remove the exhaust valve stem oil seals of cylinder 1:

1. Transfer the *EN-6086-7* lever to the exhaust side of cylinder 1.
2. Replace the *EN-6086-200-1* mounting piece with the *EN-6086-11* demounting piece .
3. Remove the exhaust valve keys, exhaust valve spring retainers, exhaust valve springs and the exhaust valve stem oil seals as described above.

Exhaust Valve Stem Oil Seal Installation Cylinder 1

1. Replace the *EN-6086-11* demounting piece with the assembled *EN-6086-200-1* mounting piece (1).
2. Install the exhaust valve keys, exhaust valve spring retainers, exhaust valve springs and the exhaust valve stem oil seals of cylinder 1 as described above.

Inlet Valve Stem Oil Seal Removal Cylinder 4

1. Release the air pressure from cylinder 1.
2. Transfer the *EN-6086-15* pneumatic adapter from cylinder 1 to the spark plug bore of cylinder 4.
3. Apply air pressure to cylinder 4.
4. Transfer the *EN-6086-7* lever to the inlet side of cylinder 4.
5. Replace the *EN-6086-200-1* mounting piece with the *EN-6086-11* demounting piece .
6. Remove the inlet valve keys, inlet valve spring retainers, inlet valve springs and the inlet valve stem oil seals of cylinder 4 as described above.

Inlet Valve Stem Oil Seal Installation Cylinder 4

1. Replace the *EN-6086-11* demounting piece with the assembled *EN-6086-200-1* mounting piece .
2. Install the inlet valve keys, inlet valve spring retainers, inlet valve springs and the inlet valve stem oil seals of cylinder 4 as described above.

Exhaust Valve Stem Oil Seal Removal And Installation Cylinder 4

Replace the exhaust valve keys, exhaust valve spring retainers, exhaust valve springs and the exhaust valve stem oil seals of cylinder 4 as described above.

Inlet Valve Stem Oil Seal Removal Cylinder 2

1. Release the air pressure from cylinder 4.
2. Transfer the *EN-6086-15* pneumatic adapter from cylinder 4 to the spark plug bore of cylinder 2.
3. Apply air pressure to cylinder 2.
4. Transfer the *EN-6086-7* lever to the inlet side of cylinder 2.
5. Replace the *EN-6086-200-1* mounting piece with the *EN-6086-11* demounting piece .
6. Remove the inlet valve keys, inlet valve spring retainers, inlet valve springs and the inlet valve stem oil seals of cylinder 2 as described above.

Inlet Valve Stem Oil Seal Installation Cylinder 2

1. Transfer the *EN-6086-7* lever to the exhaust side of cylinder 2.
2. Replace the *EN-6086-11* demounting piece with the assembled *EN-6086-200-1* mounting piece (1).
3. Install the inlet valve keys, inlet valve spring retainers, inlet valve springs and the inlet valve stem oil seals of cylinder 2 as described above.

Exhaust Valve Stem Oil Seal Removal And Installation Cylinder 2

Replace the exhaust valve keys, exhaust valve spring retainers, exhaust valve springs and the exhaust valve stem oil seals of cylinder 2 as described above.

Inlet Valve Stem Oil Seal Removal Cylinder 3

1. Release the air pressure from cylinder 2.

2. Transfer the *EN-6086-15* pneumatic adapter from cylinder 2 to the spark plug bore of cylinder 3.
3. Apply air pressure to cylinder 3.
4. Transfer the *EN-6086-7* lever to the intake side of cylinder 3.
5. Replace the *EN-6086-200-1* mounting piece with the *EN-6086-11* demounting piece .
6. Remove the inlet valve keys, inlet valve spring retainers, inlet valve springs and the inlet valve stem oil seals of cylinder 3 as described above.

Inlet Valve Stem Oil Seal Installation Cylinder 3

1. Transfer the *EN-6086-7* lever to the exhaust side of cylinder 3.
2. Replace the *EN-6086-11* demounting piece with the assembled *EN-6086-200-1* mounting piece .
3. Install the inlet valve keys, inlet valve spring retainers, inlet valve springs and the inlet valve stem oil seals of cylinder 3 as described above.

Exhaust Valve Stem Oil Seal Removal And Installation Cylinder 3

Replace the exhaust valve keys, exhaust valve spring retainers, exhaust valve springs and the exhaust valve stem oil seals of cylinder 3 as described above.

Installation Procedure

1. Release air pressure from cylinder 3.
2. Remove the *EN-6086-15* pneumatic adapter.
3. Remove all parts of *EN-6086* spring and wedge replacer .
4. Shift to neutral gear and release the park brake.
5. Install the spark plugs. Refer to Spark Plug Replacement .
6. Install the hydraulic valve clearance adjuster arms. Refer to Hydraulic Valve Clearance Adjuster Arm Replacement .
7. Raise the vehicle.
8. Remove the *EN-952* fixing pin and install the crankshaft bearing cap tie plate hole plug. Refer to.
9. Install the right front wheelhousing lining. Refer to Front Wheelhouse Rear Liner Replacement .
10. Lower the vehicle.

&#169© Copyright Chevrolet. All rights reserved

Engine Mount Bracket Removal

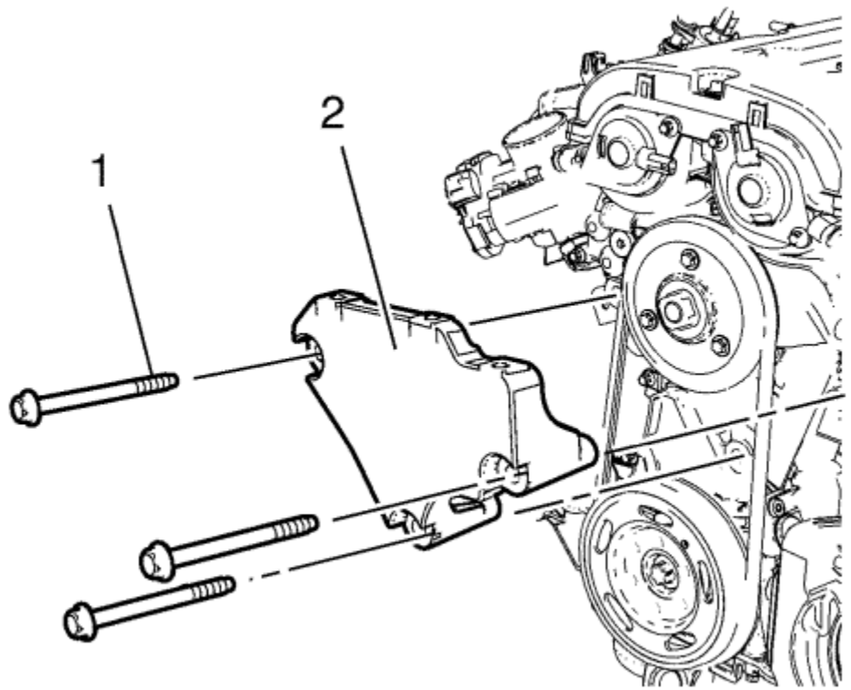

1. Remove the 3 engine mount bracket bolts (1).
2. Remove the engine mount bracket (2).

© Copyright Chevrolet. All rights reserved

Camshaft Timing Chain Inspection

Special Tools

- *EN-952* Fixing Pin
- *EN-953-A* Fixing Tool
- *EN-49977-100* Transmitter Disc Fixation

For equivalent regional tools, refer to Special Tools .

1. Remove the ignition coil. Refer to Ignition Coil Removal .
2. Remove the camshaft cover. Refer to Camshaft Cover Removal .
3. Remove the air conditioning compressor bracket. Refer to Air Conditioning Compressor Bracket Removal .

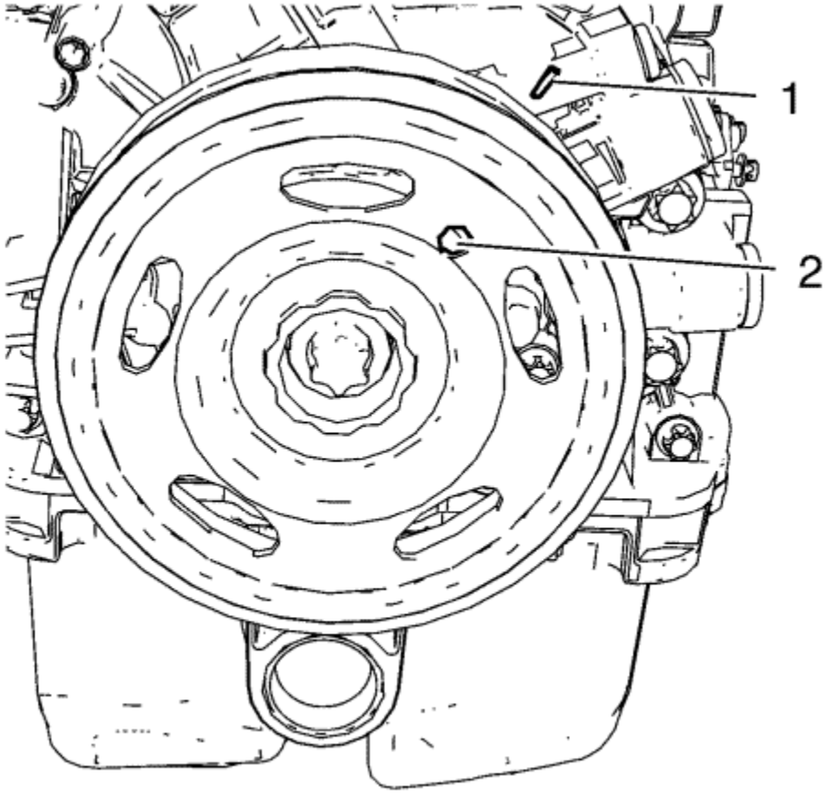

4. Rotate the engine clockwise until the bore (2) in the crankshaft balancer aligns with the mark (1) on the engine front cover.

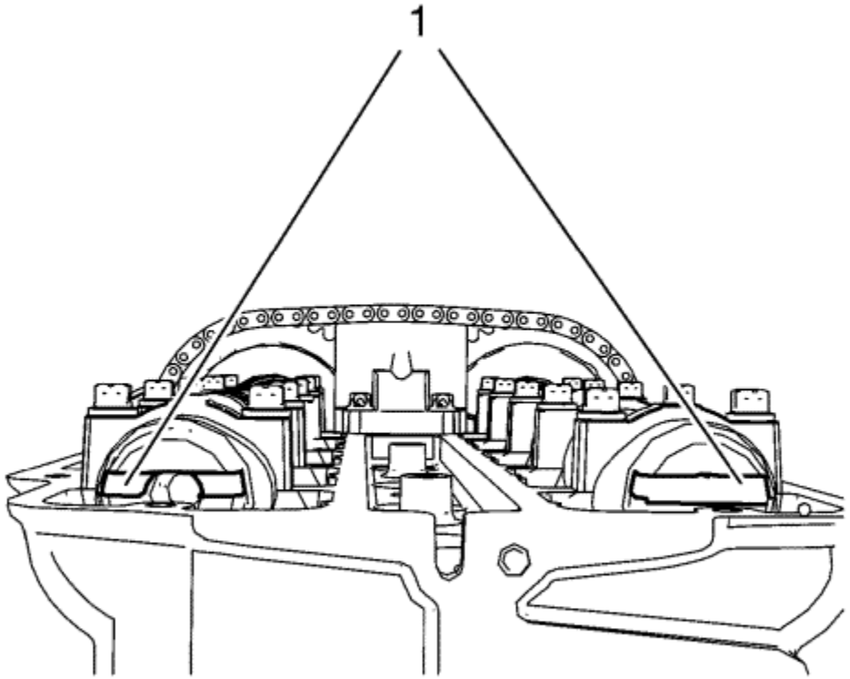

5. Ensure that the camshaft grooves (1) are visible as shown. If the camshaft grooves are not visible rotate the crankshaft **360°**.

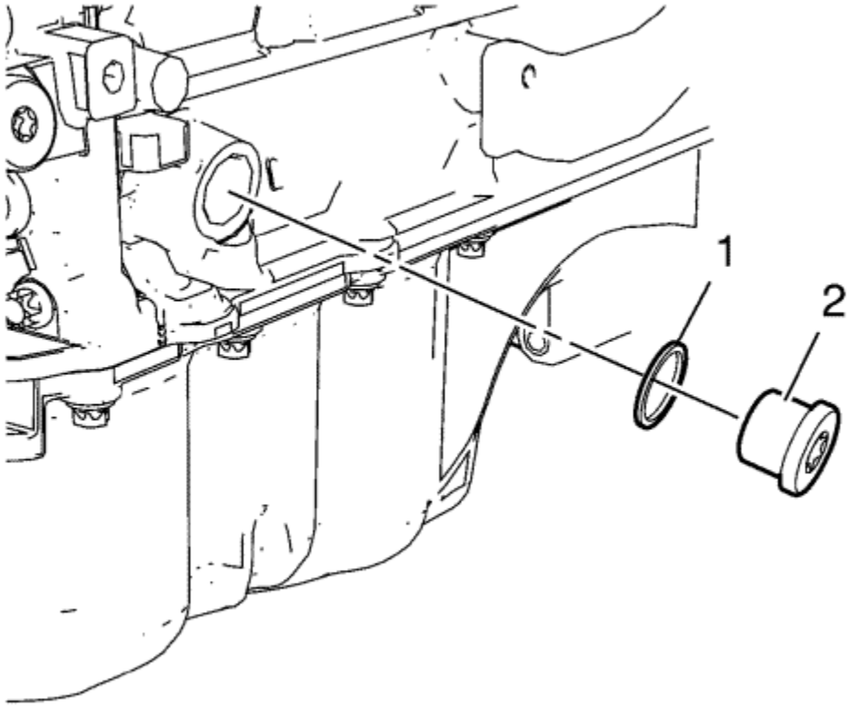

6. Remove the crankshaft bearing cap tie plate hole plug (2) and the seal ring (1).

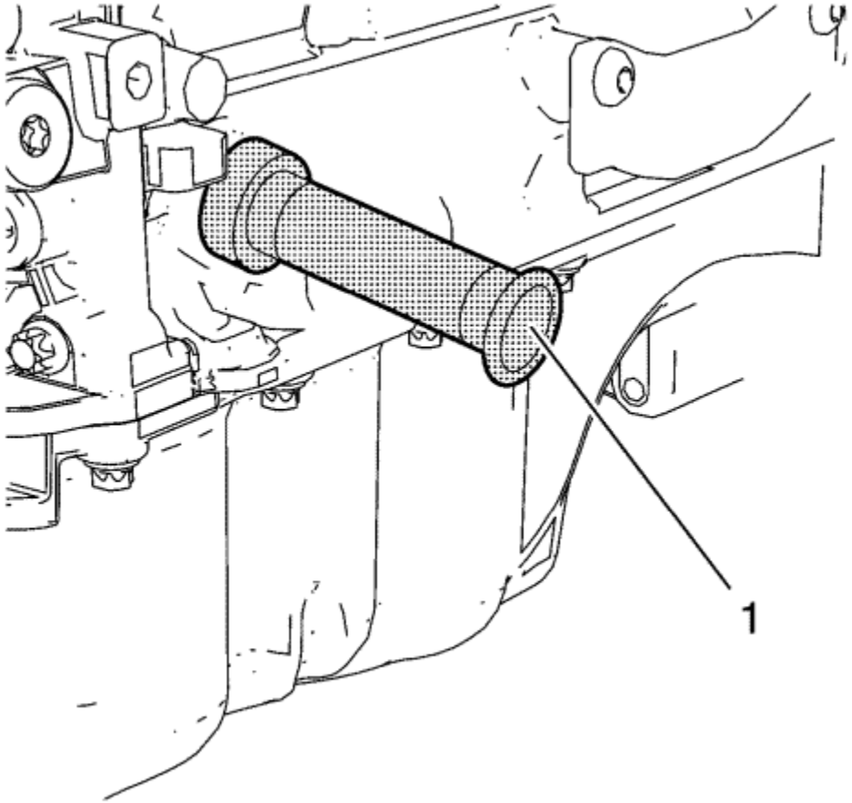

Caution: To ensure proper crankshaft top dead centre (TDC) alignment, the retention pin should fit easily through the bore in the crankshaft tie plate and into the crankshaft. Binding of the retention pin could affect proper engine timing.

7. Install *EN-952* fixing pin (1) in order to fix the crankshaft in TDC position.

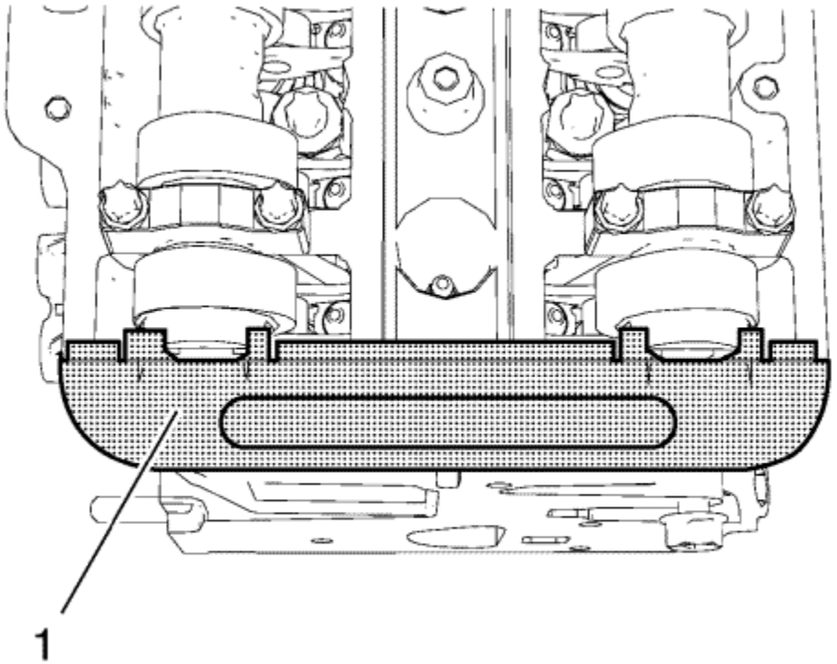

Note: The fixing tool should be installed completely to both camshaft grooves without extreme effort.

8. Install *EN-953-A* fixing tool (1) to the camshafts.

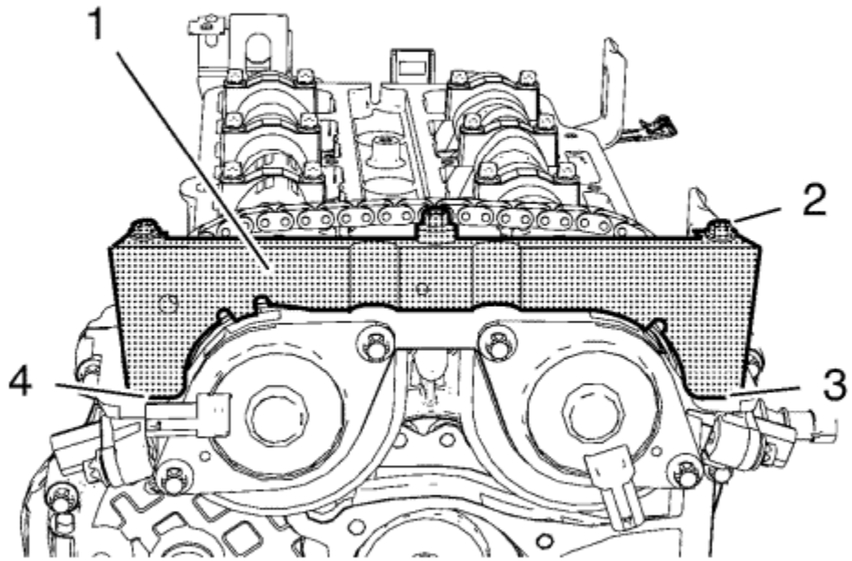

9. Install *EN-49977-100* fixation (1) in order to inspect the correct position of the camshaft position exciter wheels.

   Note: A wrong installation position is possible. Make sure that the fixation tool is installed without clearance to the cylinder head in areas (3) and (4).

10. Tighten the bolts (2) of *EN-49977-100* fixation.
11. If *EN-953-A* fixing tool or *EN-49977-100* fixation can not be installed, refer to Camshaft Timing Chain Adjustment .
12. Remove *EN-49977-100* fixation.
13. Remove *EN-953-A* fixing tool.
14. Remove *EN-952* fixing pin.

    Caution: Refer to Fastener Caution in the Preface section.

15. Install crankshaft bearing cap tie plate hole plug and seal ring and tighten to **40 N·m (30 lb ft)**.
16. Install the camshaft cover. Refer to Camshaft Cover Installation .
17. Install the ignition coil. Refer to Ignition Coil Installation .
18. Install the air conditioning compressor bracket. Refer to Air Conditioning Compressor Bracket Installation .

&#169© Copyright Chevrolet. All rights reserved

Camshaft Timing Chain Adjustment

Special Tools

- *EN-952* Fixing Pin
- *EN-953-A* Fixing Tool
- *EN-49977-100* Transmitter Disc Fixation

For equivalent regional tools, refer to Special Tools .

1. Remove the ignition coil. Refer to Ignition Coil Removal .
2. Remove the camshaft cover. Refer to Camshaft Cover Removal .
3. Remove the air conditioning compressor bracket. Refer to Air Conditioning Compressor Bracket Removal .
4. Remove the camshaft position actuator solenoid valves. Refer to Camshaft Position Actuator Solenoid Valve Removal .

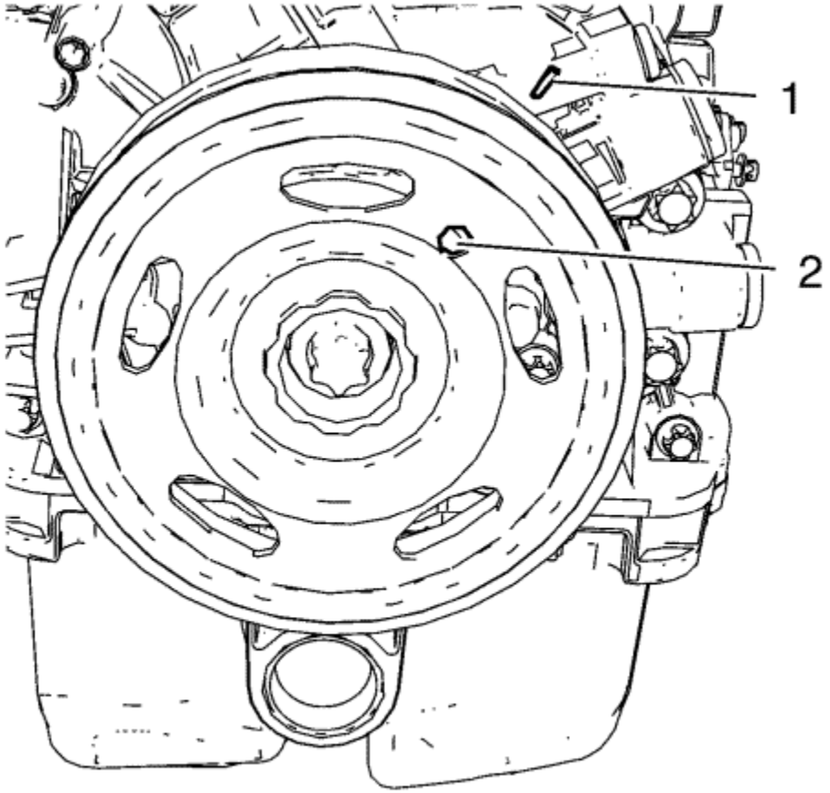

5. Rotate the engine clockwise until the bore (2) in the crankshaft balancer aligns with the mark (1) on the engine front cover.

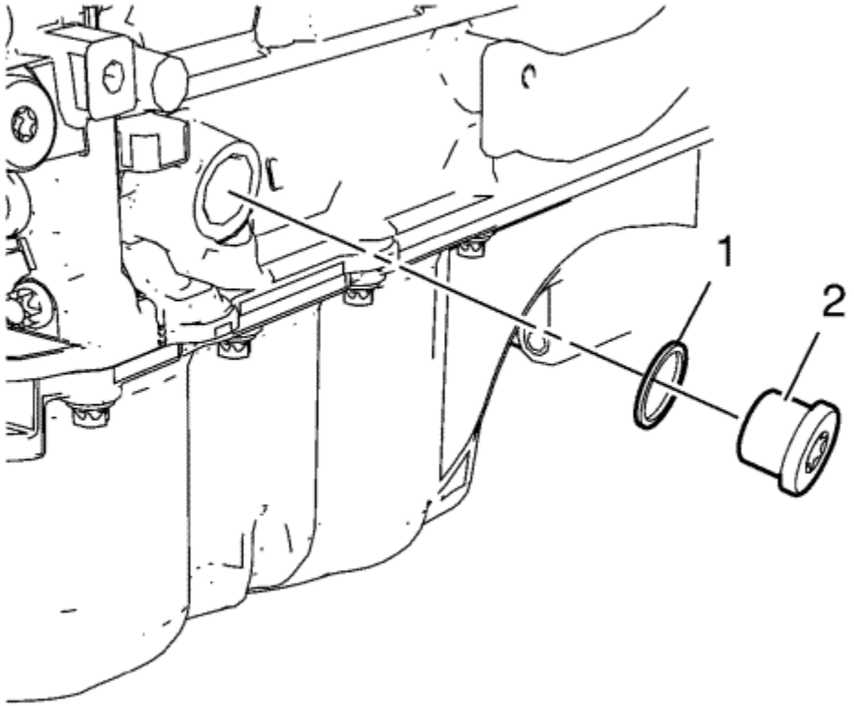

6. Remove the crankshaft bearing cap tie plate hole plug (2) and the seal ring (1).

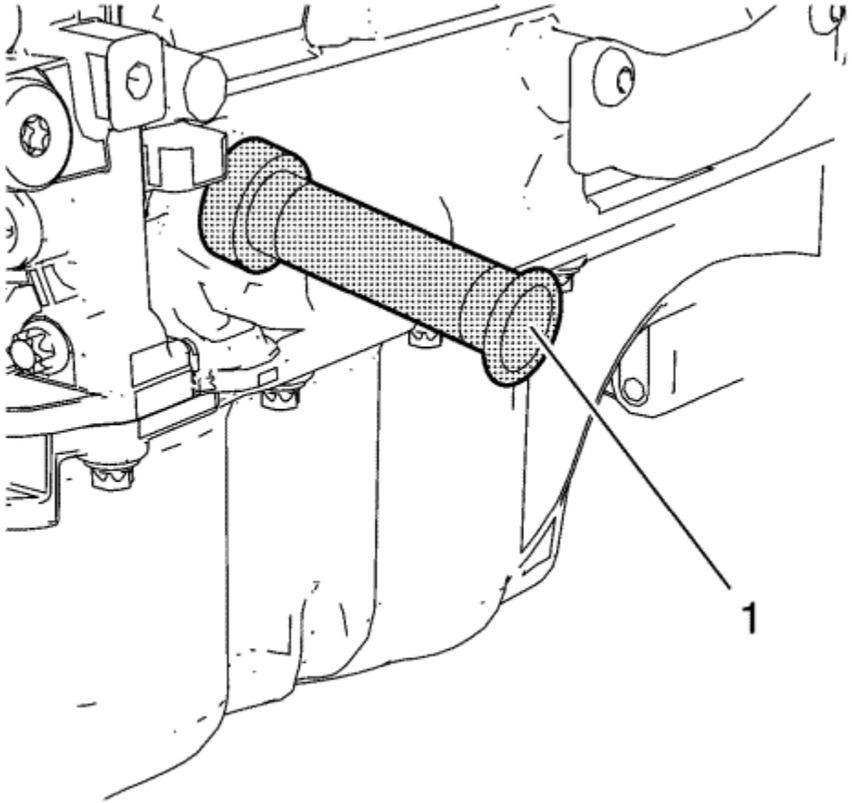

Caution: To ensure proper crankshaft top dead centre (TDC) alignment, the retention pin should fit easily through the bore in the crankshaft tie plate and into the crankshaft. Binding of the retention pin could affect proper engine timing.

7. Install *EN-952* fixing pin (1) in order to fix the crankshaft in TDC position.

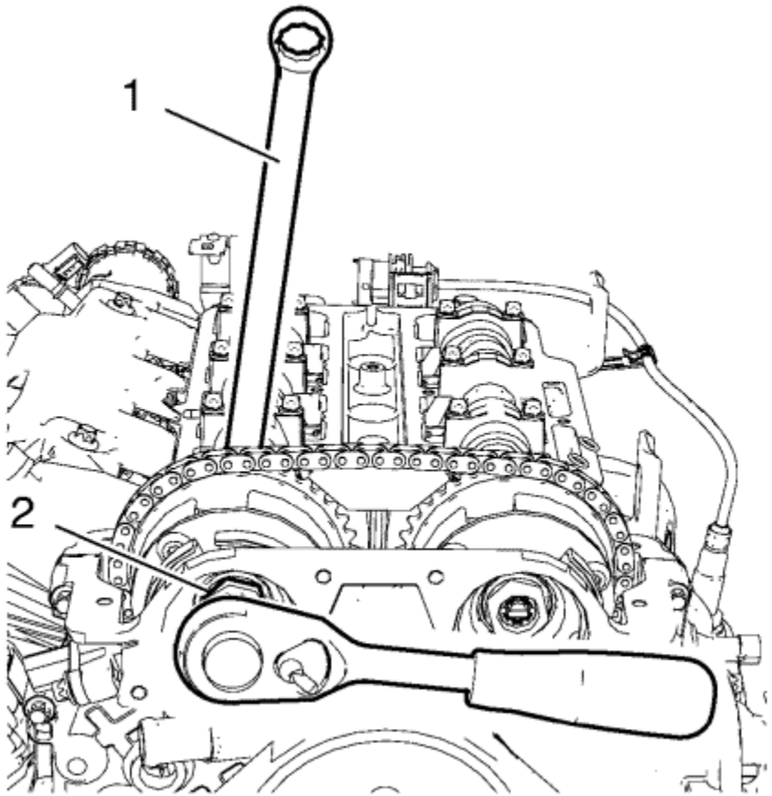

8. Loosen the inlet camshaft sprocket bolt (2) while holding up the hexagon of the inlet camshaft with a spanner (1) until the camshaft position exciter wheel is clearly rotatable.
9. Loosen the exhaust camshaft sprocket bolt while holding up the hexagon of the exhaust camshaft with a spanner until the camshaft position exciter wheel is clearly rotatable.

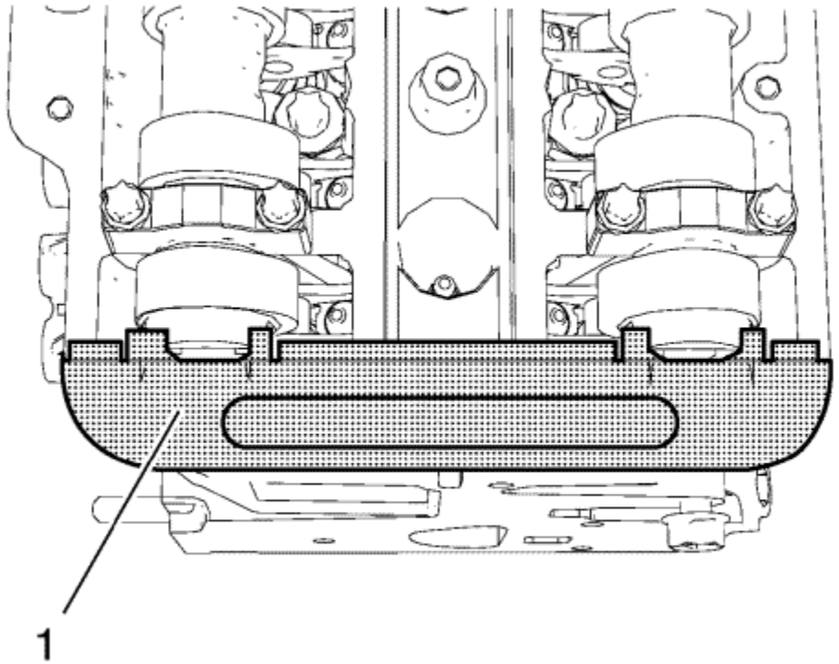

Note: The fixing tool should be installed completely to both camshaft grooves without extreme effort.

10. Adjust camshafts that *EN-953-A* fixing tool (1) can be installed.

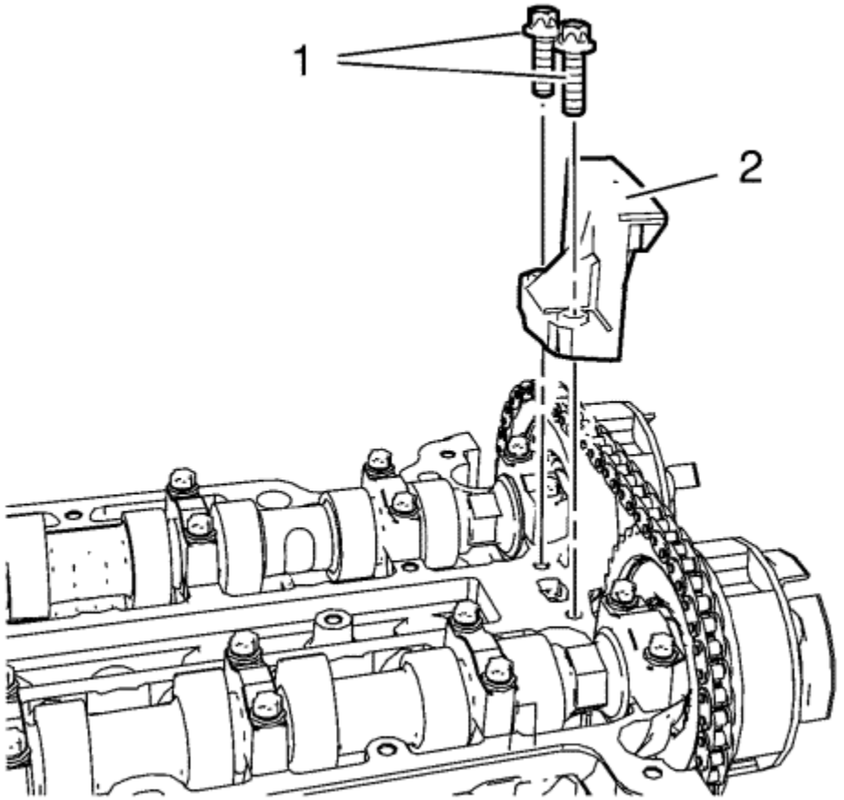

11. Remove 2 upper timing chain guide bolts (1).
12. Remove upper timing chain guide (2).

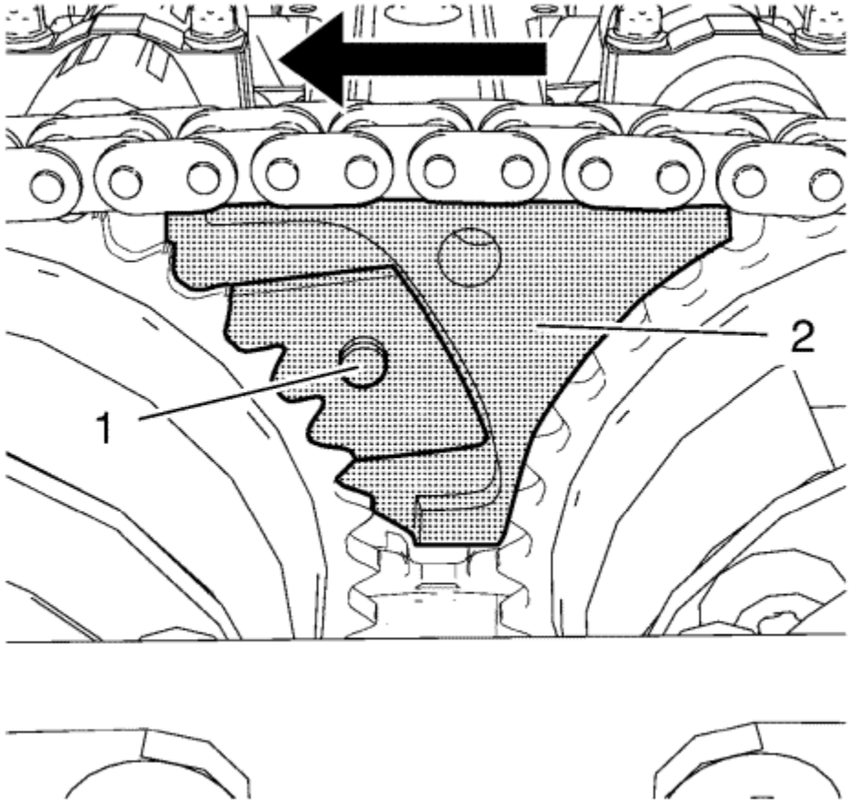

Note: Push the fixing tool in the direction of the arrow to ensure it engages without clearance.

13. Install *EN-49977-200* fixing tool (2) and adjust that the gearing (1) of the fixing tool engages with the inlet camshaft sprocket gearing (1).

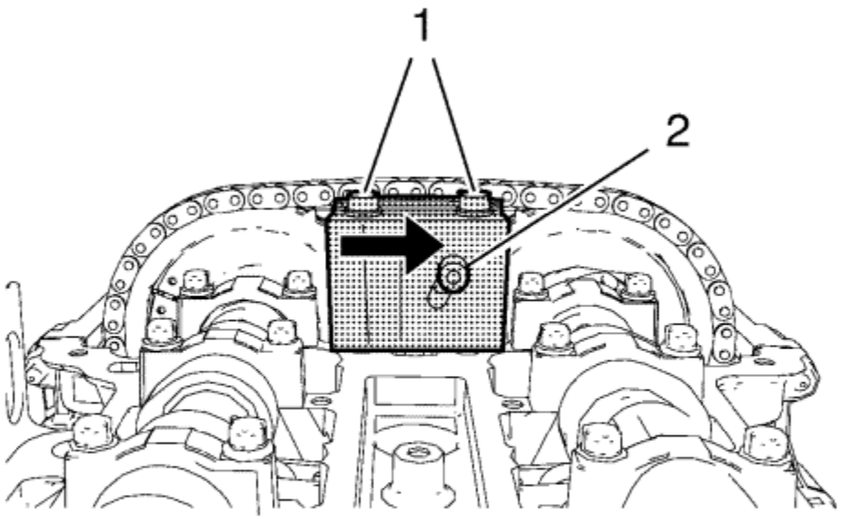

14. Tighten the 2 fastening bolts (1) of *EN-49977-200* fixing tool while pushing the fixing tool in direction of the arrow.
15. Tighten the adjuster bolt (2).

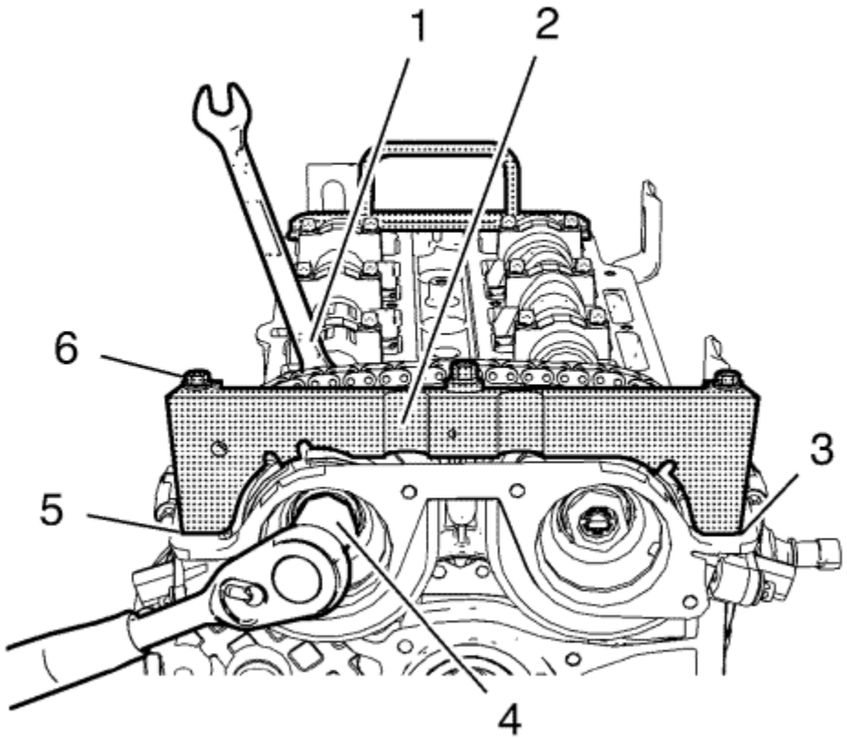

Note: A wrong installation position is possible. Make sure that the fixation tool is installed without clearance to the cylinder head in areas (3) and (5).

16. Install *EN-49977-100* fixation (2) in order to find and fix the correct position of the camshaft position exciter wheels.
17. Tighten the 3 fastening bolts (6) of *EN-49977-100* fixation.

Caution: Refer to Fastener Caution in the Preface section.

18. Tighten the intake camshaft sprocket bolt (4) while holding up the hexagon (1) of the intake camshaft to **50 N·m (37 lb ft)**.
19. Tighten the intake camshaft sprocket bolt (4) while holding up the hexagon (1) of the intake camshaft to an additional **60°**.
20. Tighten the exhaust camshaft sprocket bolt while holding up the hexagon of the exhaust camshaft to **50 N·m (37 lb ft)**.
21. Tighten the exhaust camshaft sprocket bolt while holding up the hexagon of the exhaust camshaft to an additional **60°**.
22. Remove *EN-49977-100* transmitter disc fixation and *EN-49977-200* fixing tool.

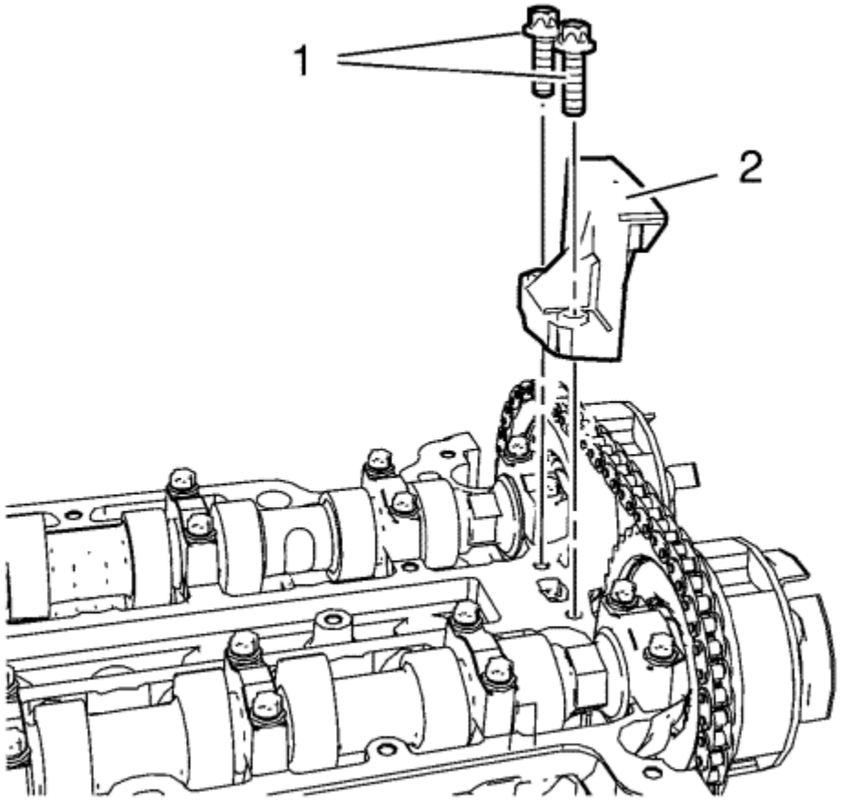

23. Install upper timing chain guide (2).
24. Install 2 upper timing chain guide bolts (1) and tighten to **8 N·m (71 lb in)**.
25. Remove *EN-953-A* fixing tool.
26. Remove *EN-952* fixing pin.
27. Rotate the crankshaft for **720°** and check the engine timing again. Repeat the adjustment procedure if necessary.
28. Install crankshaft bearing cap tie plate hole plug and seal ring and tighten to **40 N·m (30 lb ft)**.
29. Install the camshaft position actuator solenoid valves. Refer to Camshaft Position Actuator Solenoid Valve Installation .
30. Install the camshaft cover. Refer to Camshaft Cover Installation .
31. Install the ignition coil. Refer to Ignition Coil Installation .
32. Install the air conditioning compressor bracket. Refer to Air Conditioning Compressor Bracket Installation .

&#169© Copyright Chevrolet. All rights reserved

Draining Fluids and Oil Filter Removal

Special Tools

EN-726-A Oil Filter Spanner

For equivalent regional tools, refer to Special Tools .

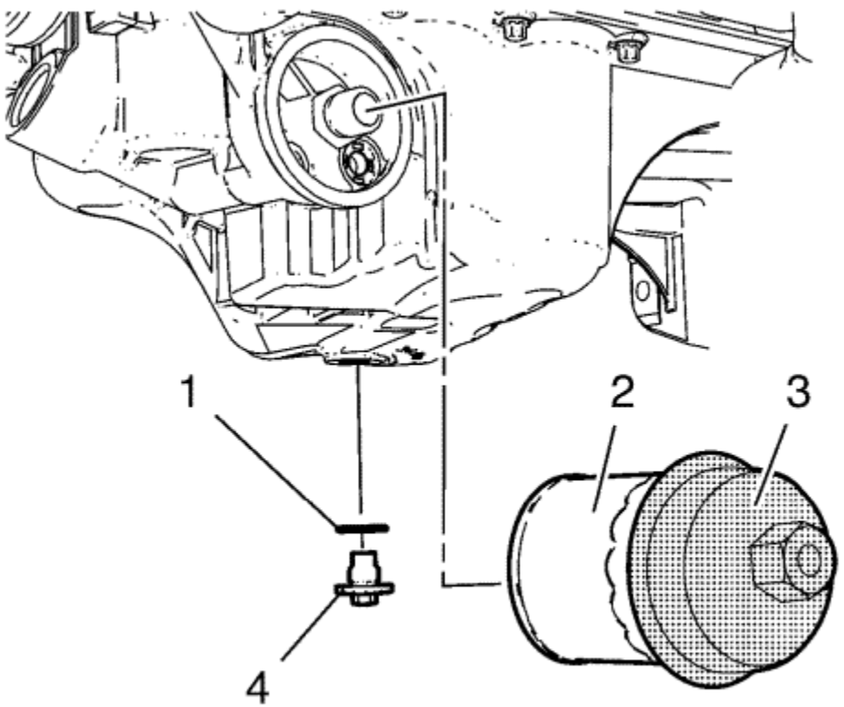

1. Remove the oil sump drain plug (4) and the seal ring (1) allow the oil to drain out.

2. Remove the oil filter (2). Use *EN-726-A* wrench (3).

   Caution: Refer to Fastener Caution in the Preface section.

3. Install the oil pan drain plug and a NEW seal ring and tighten to **14 N·m (124 lb in)**.

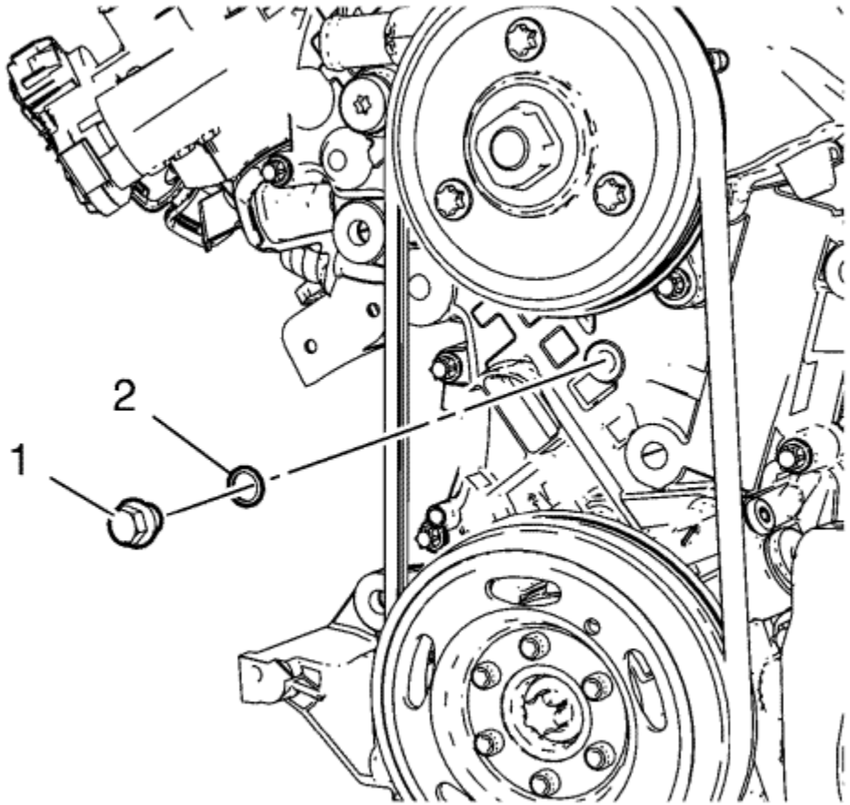

4. Remove the water pump drain plug (1) and the water pump drain plug seal ring (2) and allow the remaining coolant fluid to drain out.
5. Install the water pump drain plug and a NEW seal ring and tighten to **15 N·m (11 lb ft)**.

© Copyright Chevrolet. All rights reserved

Engine Lift Bracket Removal

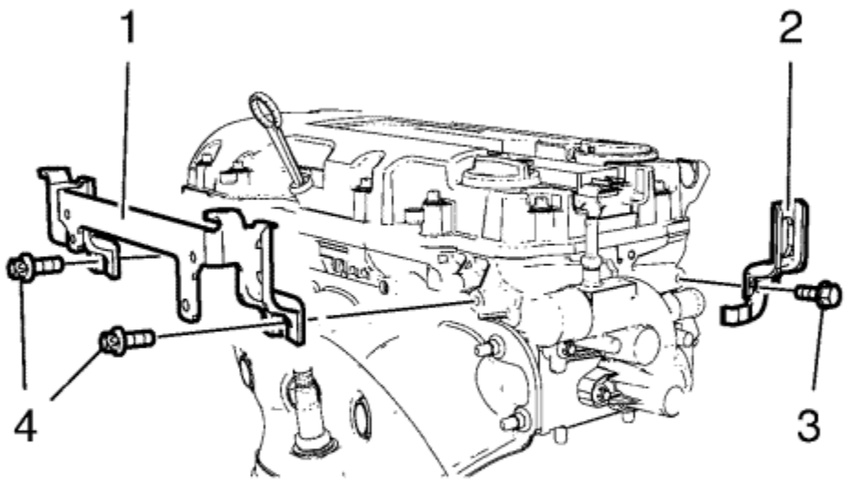

1. Remove the sidewise engine lift bracket bolt (3).
2. Remove the sidewise engine lift bracket (2).
3. Remove the 2 engine lift bracket bolts (4).
4. Remove the engine lift bracket (1).

© Copyright Chevrolet. All rights reserved

Exhaust Manifold Removal

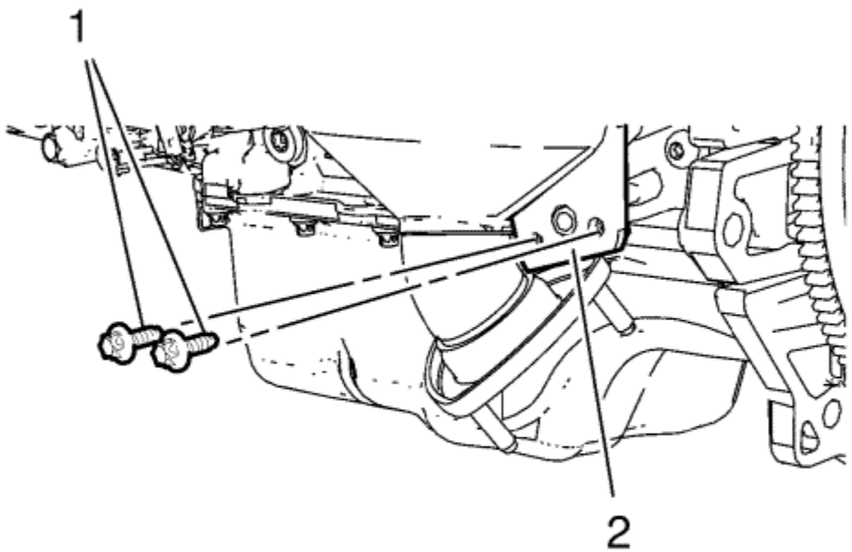

1. Remove the 2 catalytic converter bracket bolts (1) from the catalytic converter bracket (2).

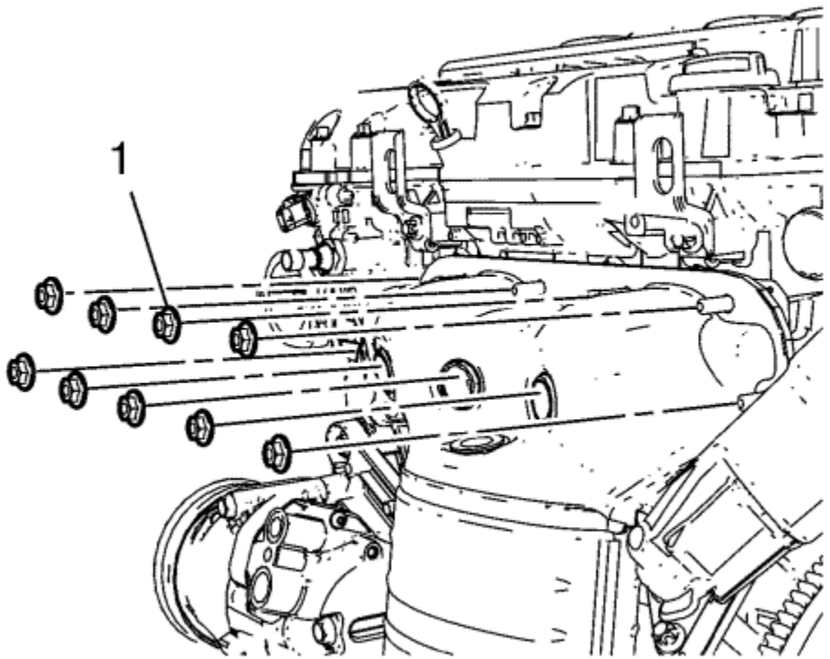

2. Remove the 9 exhaust manifold nuts (1).

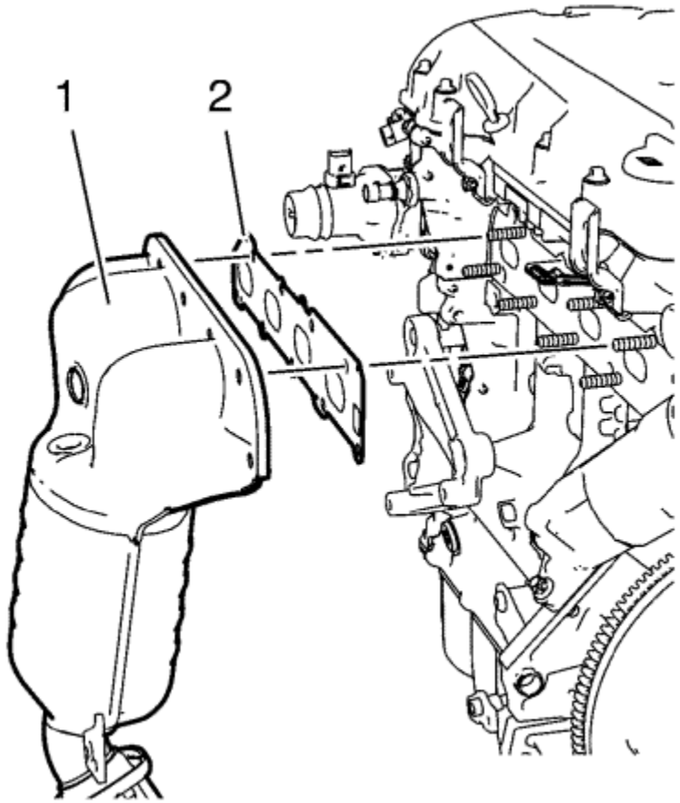

3. Remove the exhaust manifold (1) and the exhaust manifold gasket (2).

© Copyright Chevrolet. All rights reserved

Engine Coolant Thermostat Housing Removal

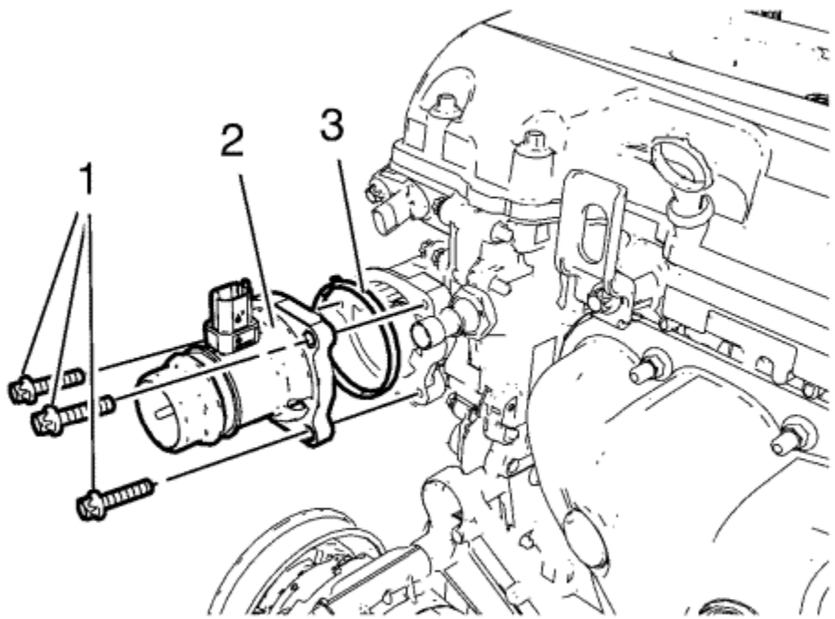

1. Remove the 3 engine coolant thermostat housing bolts (1).
2. Remove the engine coolant thermostat housing (2) and the engine coolant thermostat housing seal ring (3).

© Copyright Chevrolet. All rights reserved

Water Outlet Removal

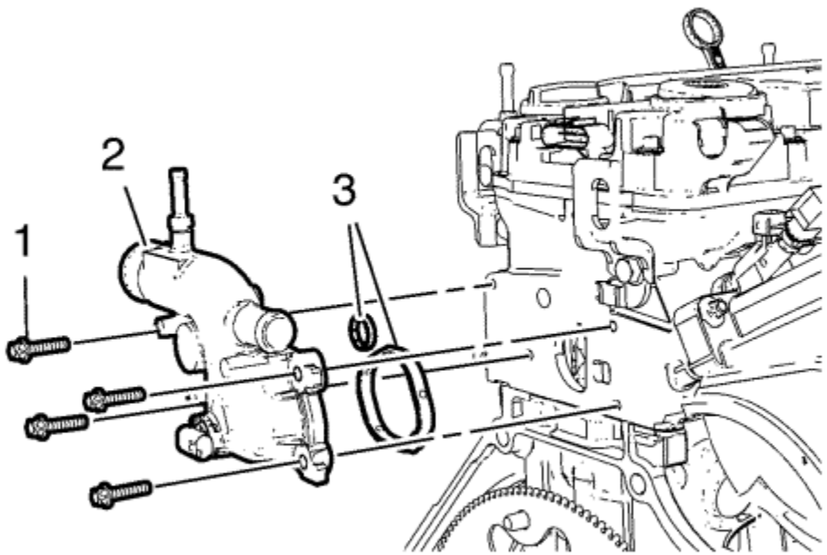

1. Remove the 4 water outlet bolts (1).
2. Remove the water outlet (2) and the 2 water outlet seal rings (3).

© Copyright Chevrolet. All rights reserved

Air Conditioning Compressor Bracket Removal

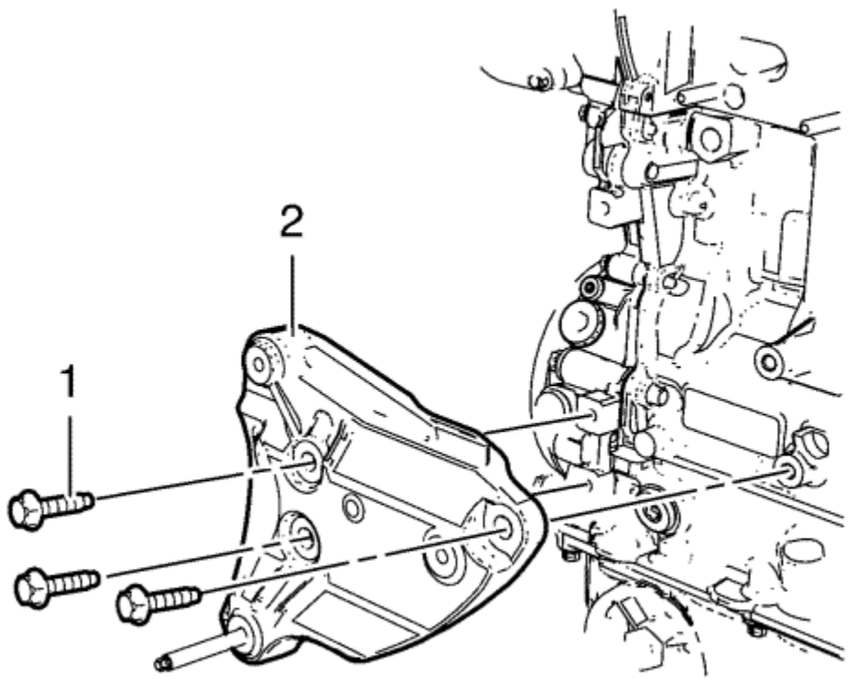

1. Remove the 3 air conditioning compressor bracket bolts (1).
2. Remove the air conditioning compressor bracket (2).

© Copyright Chevrolet. All rights reserved

Water Pump Pulley Removal

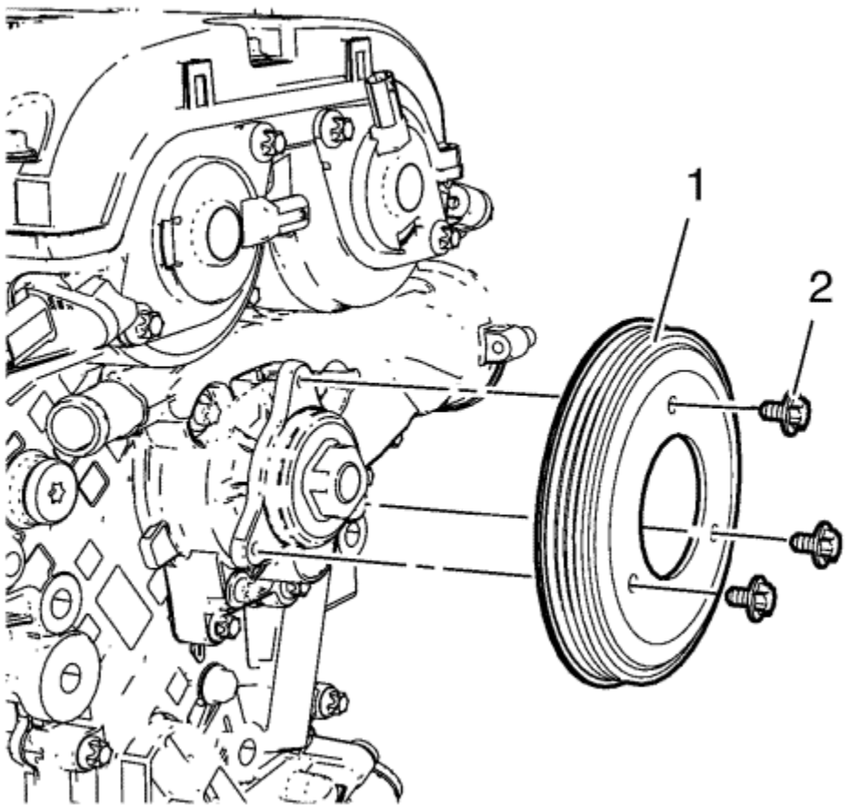

1. Loosen the 3 water pump pulley bolts (2) while holding up the water pump pulley hub with a spanner.
2. Remove the 3 water pump pulley bolts (2).
3. Remove the water pump pulley (1).

© Copyright Chevrolet. All rights reserved

Crankshaft Balancer Removal

Special Tools

- *EN-49979* Crankshaft Shock Mount Retainer.
- *EN-956-1* Extension .

For equivalent regional tools, refer to Special Tools .

1. Install *EN-49979* retainer to *EN-956-1* extension .

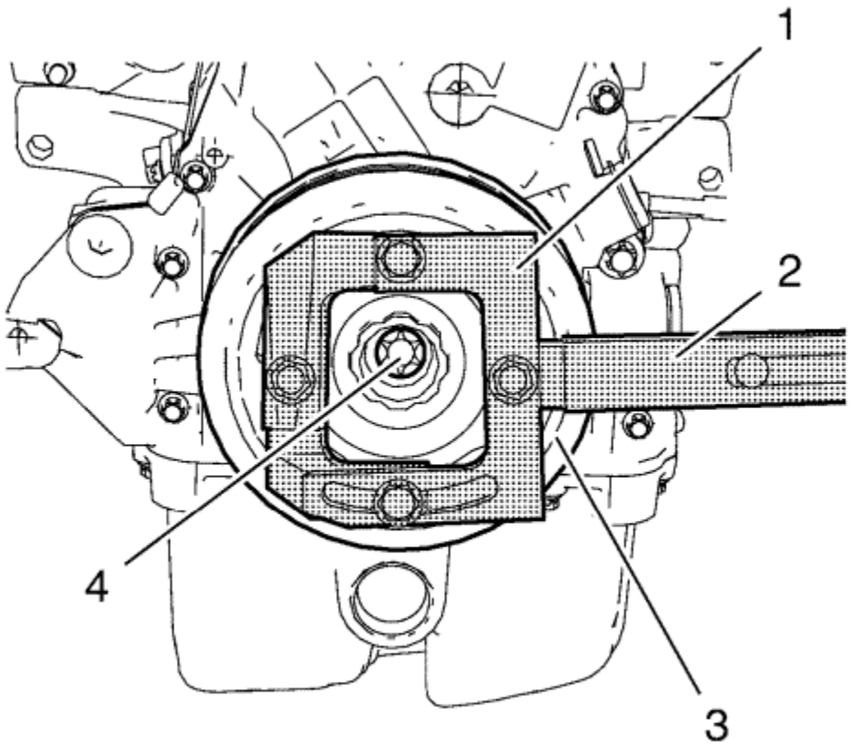

2. Loosen the crankshaft balancer bolt (4) while fixing the crankshaft balancer (3) with *EN-49979* retainer (1) and *EN-956-1* extension (2).

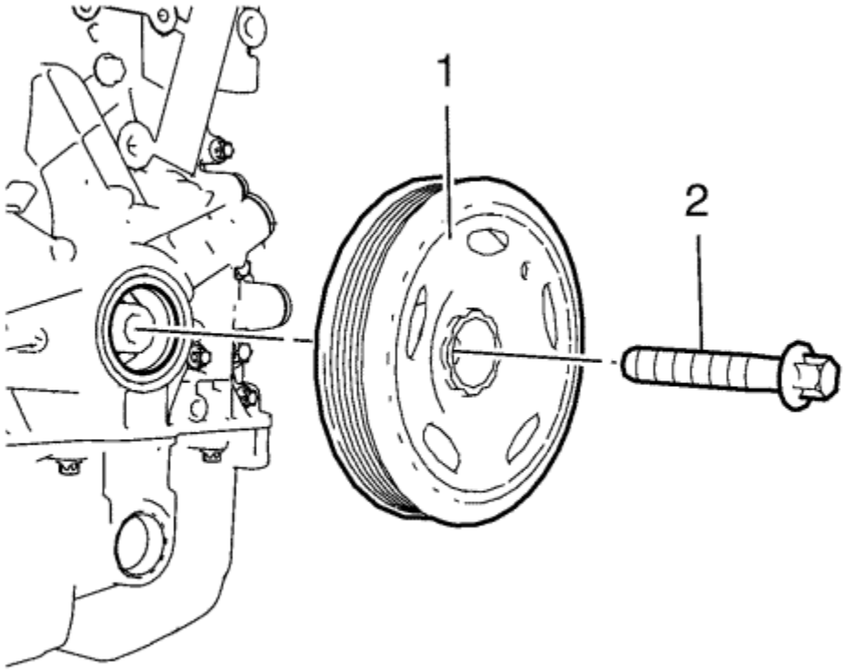

3. Remove the crankshaft balancer bolt (2).
4. Remove the crankshaft balancer (1).

&#169© Copyright Chevrolet. All rights reserved

Water Pump Removal

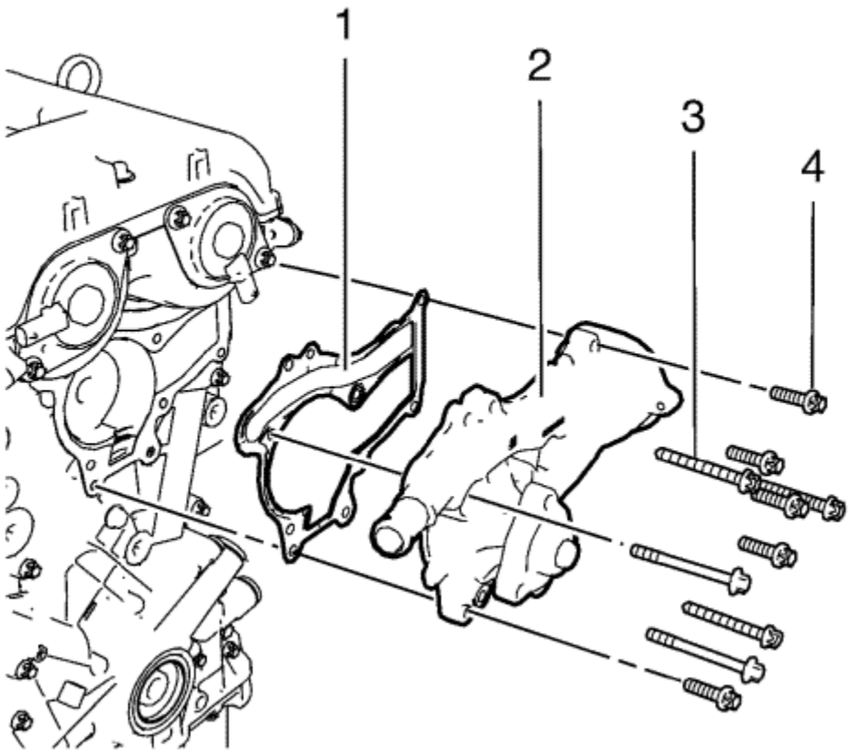

1. Remove the 5 short water pump bolts (4) and the 5 long water pump bolts (3).
2. Remove the water pump (2).
3. Remove the water pump gasket (1).

© Copyright Chevrolet. All rights reserved

Throttle Body Removal

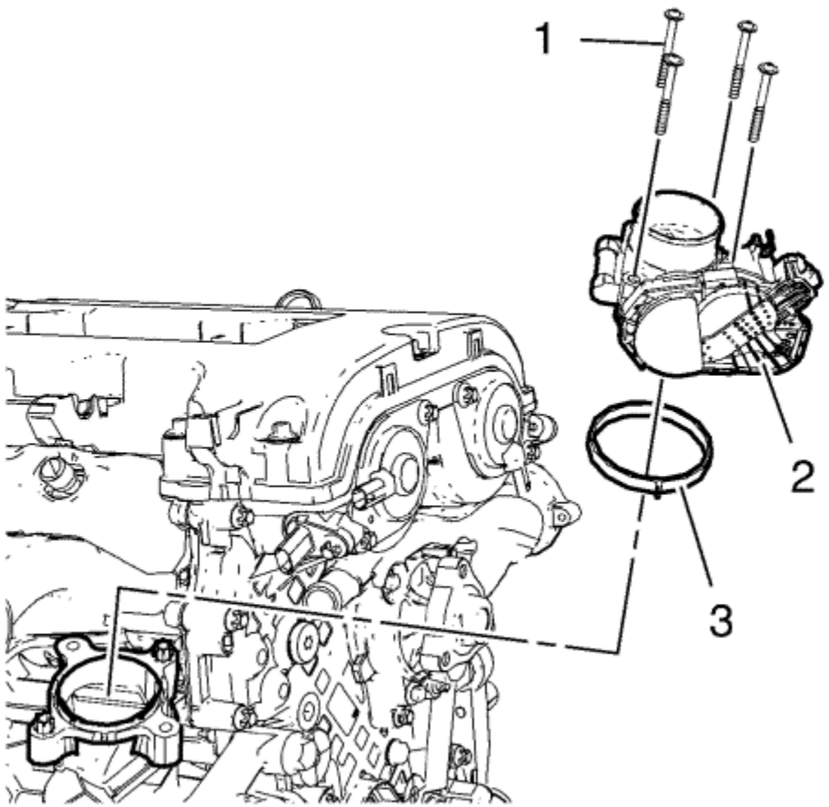

1. Remove the 4 throttle body bolts (1).
2. Remove the throttle body (2) and the throttle body seal ring (3)

© Copyright Chevrolet. All rights reserved

Inlet Manifold Removal

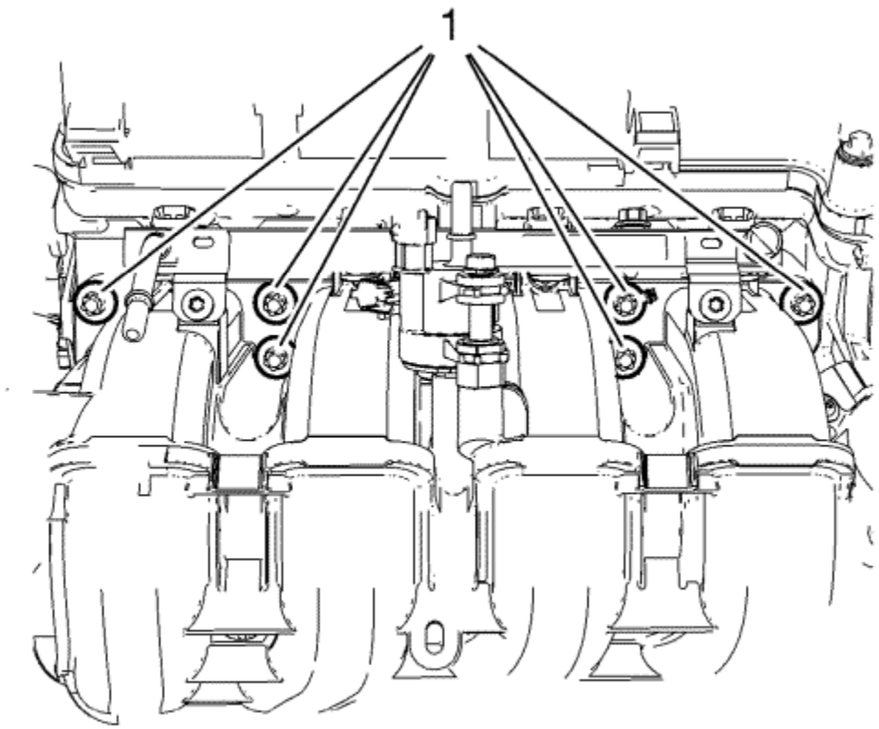

1. Loosen the 6 intake manifold bolts (1).

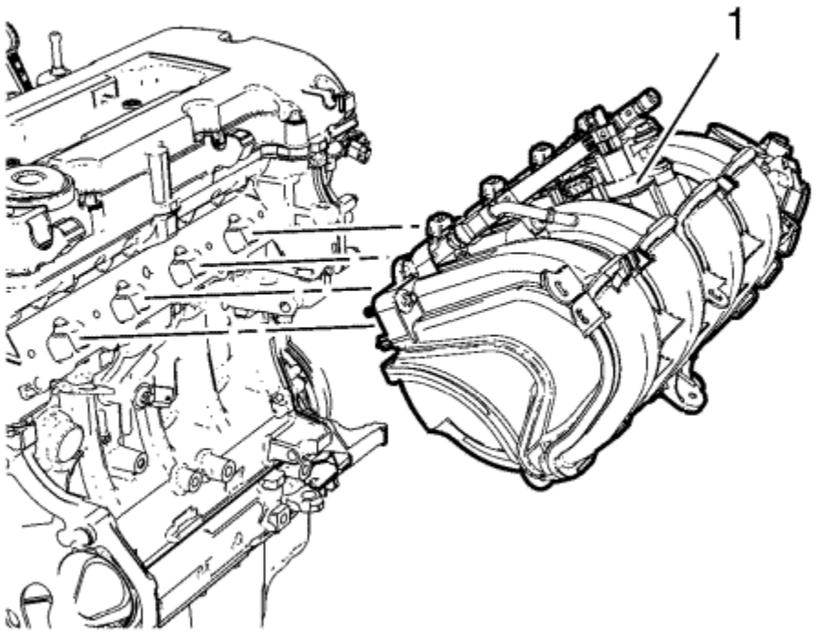

Note: Intake manifold bolts remain in intake manifold screw bores.

2. Remove the intake manifold (1) in compound with the intake manifold gasket.

© Copyright Chevrolet. All rights reserved

Ignition Coil Removal

Special Tools

EN-6009 Remover and Installer Ignition Module

For equivalent regional tools, refer to Special Tools .

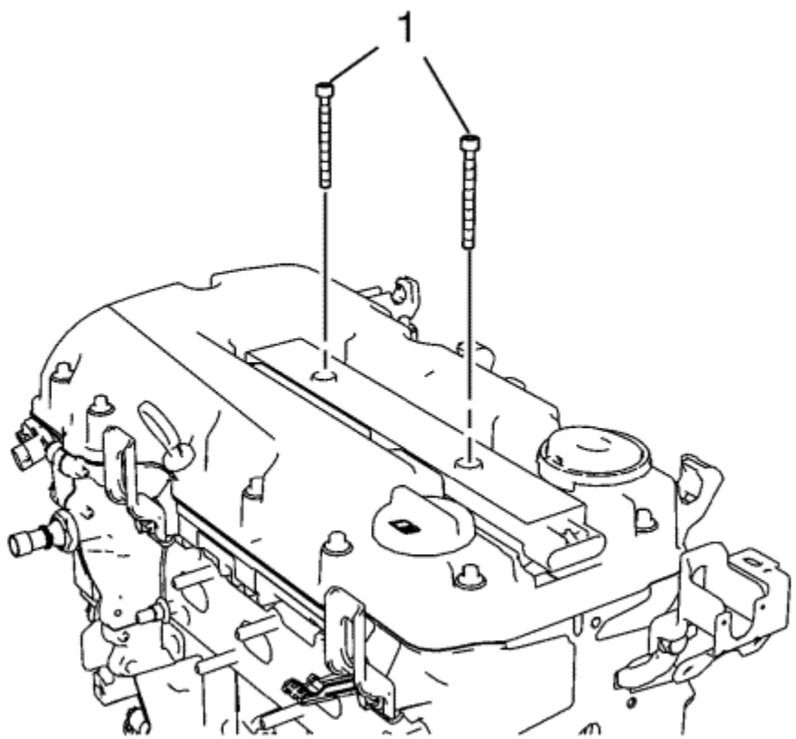

1. Remove the 2 ignition coil bolts (1).

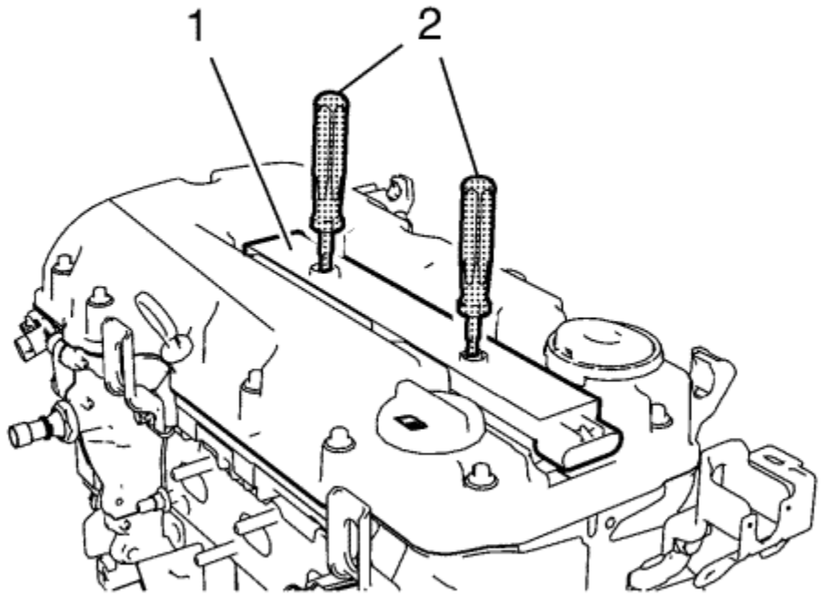

2. Install *EN-6009* remover and installer (2) and remove the ignition coil (1).

© Copyright Chevrolet. All rights reserved

Camshaft Cover Removal

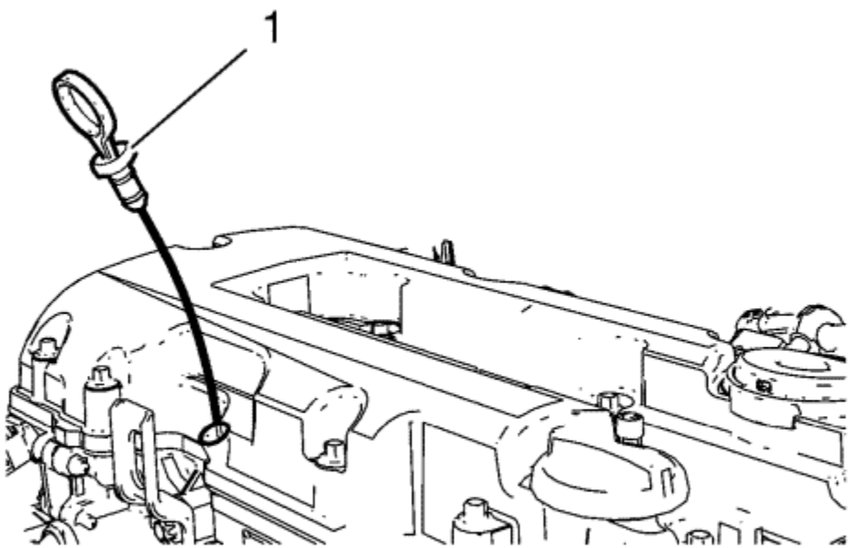

1. Remove the oil level indicator (1).

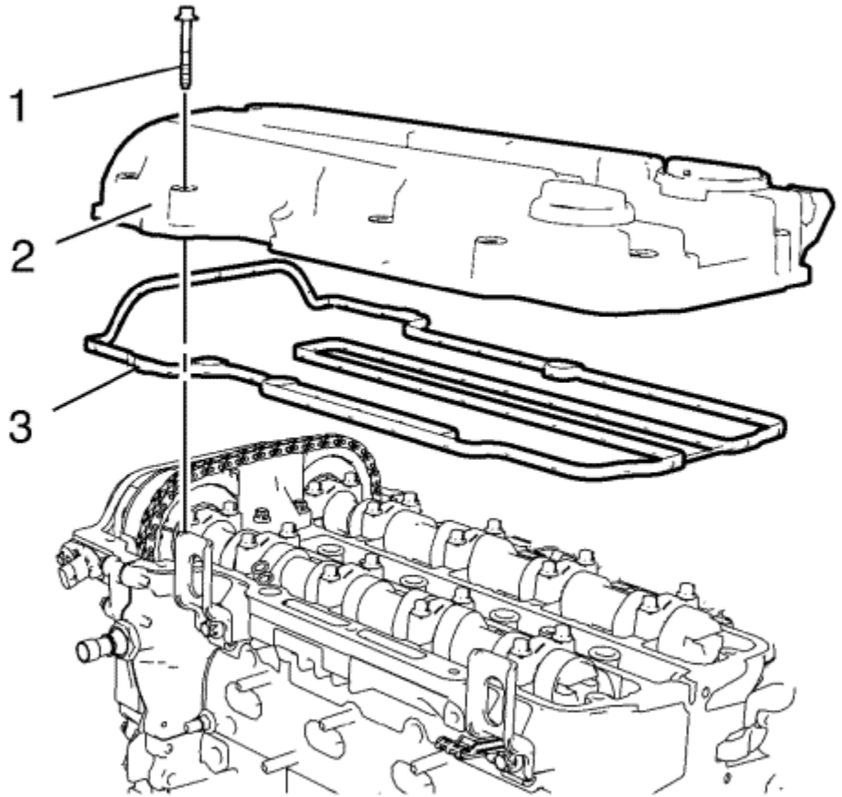

2. Remove the 15 camshaft cover bolts (1).
3. Remove the camshaft cover (2) and the camshaft cover gasket (3).

© Copyright Chevrolet. All rights reserved

Camshaft Position Actuator Solenoid Valve Removal

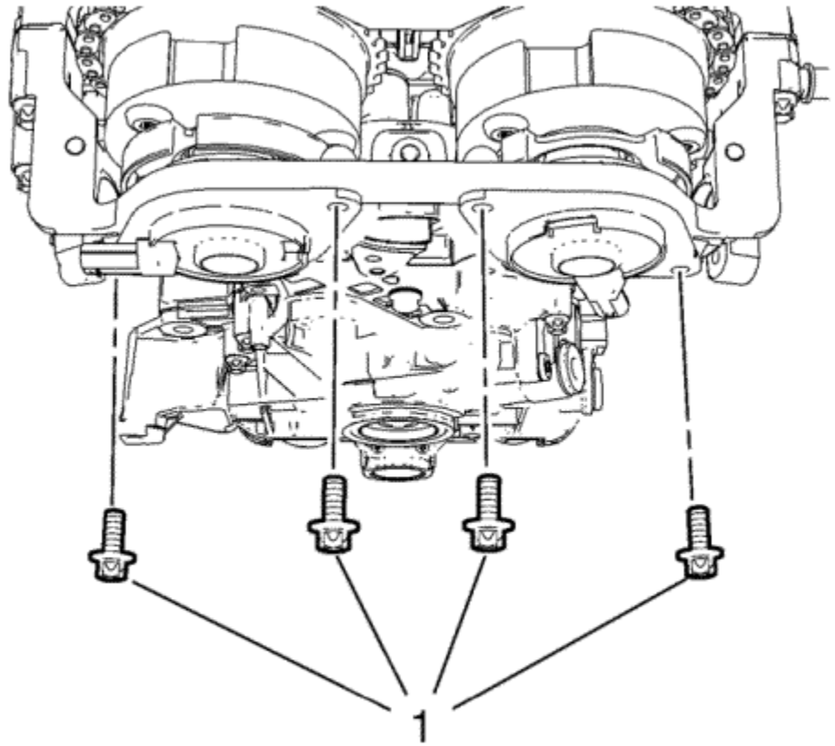

1. Remove the 4 camshaft position actuator solenoid valve bolts (1).

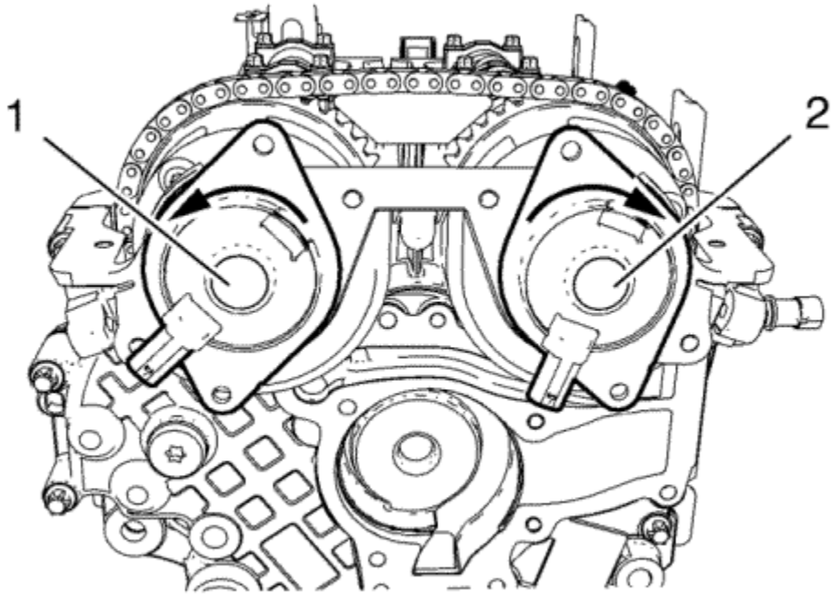

2. Move the intake camshaft position actuator solenoid valve (1) carefully counter clockwise in the position shown.
3. Move the exhaust camshaft position actuator solenoid valve (2) carefully clockwise in the position shown.

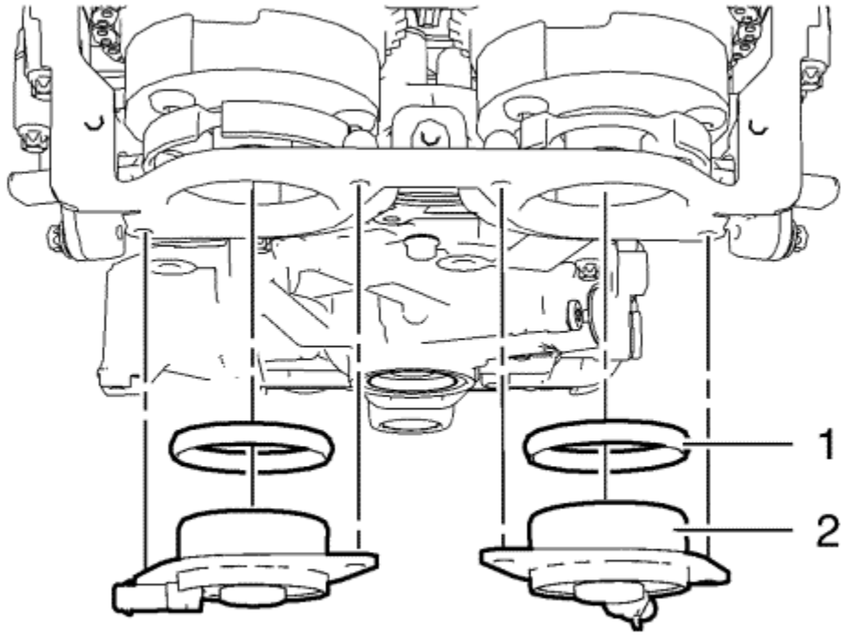

Caution: The camshaft position actuator solenoid valves must be kept parallel to the engine front cover during removal and installation. The camshaft position actuator solenoid valves can be damaged if they become wedged or stuck during this process.

4. Carefully remove the 2 camshaft position actuator solenoid valves (2) and the seal rings (1).

© Copyright Chevrolet. All rights reserved

Sump Removal

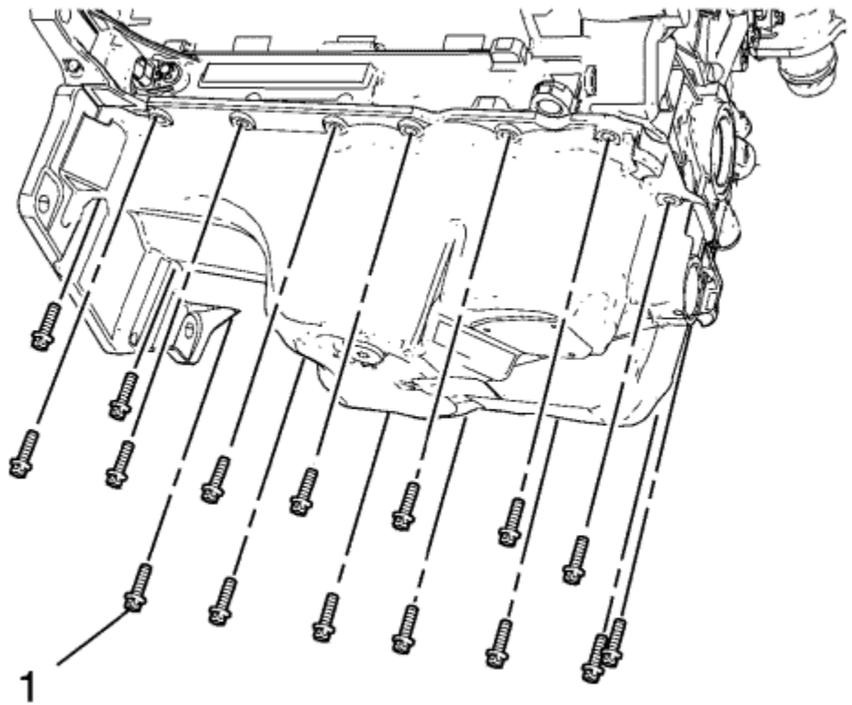

1. Remove the 16 oil sump bolts (1).

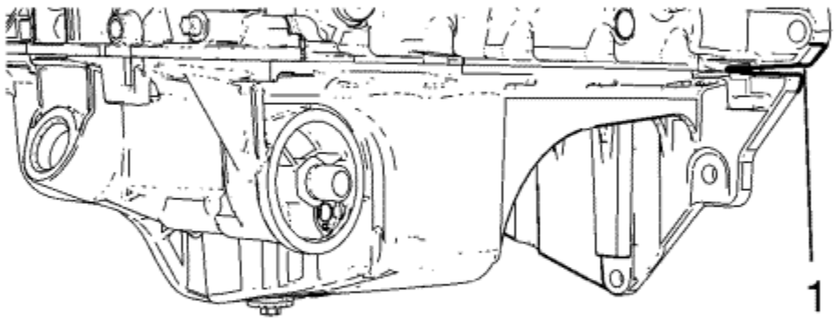

Note: Work with care. Do not damage the oil sump or crankshaft bearing tie plate sealing surfaces.

2. Install a mounting lever to the area (1) and loosen the oil sump by cautiously levering.

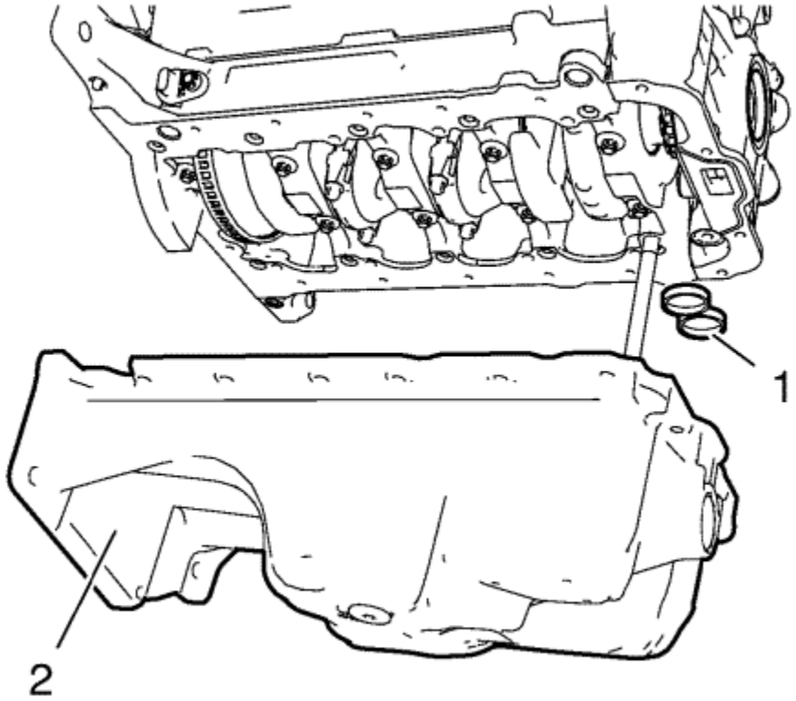

3. Remove the oil sump (2) and the seal rings (1).

© Copyright Chevrolet. All rights reserved

Engine Front Cover and Oil Pump Removal

1. Set engine to TDC. Refer to Camshaft Timing Chain Inspection .

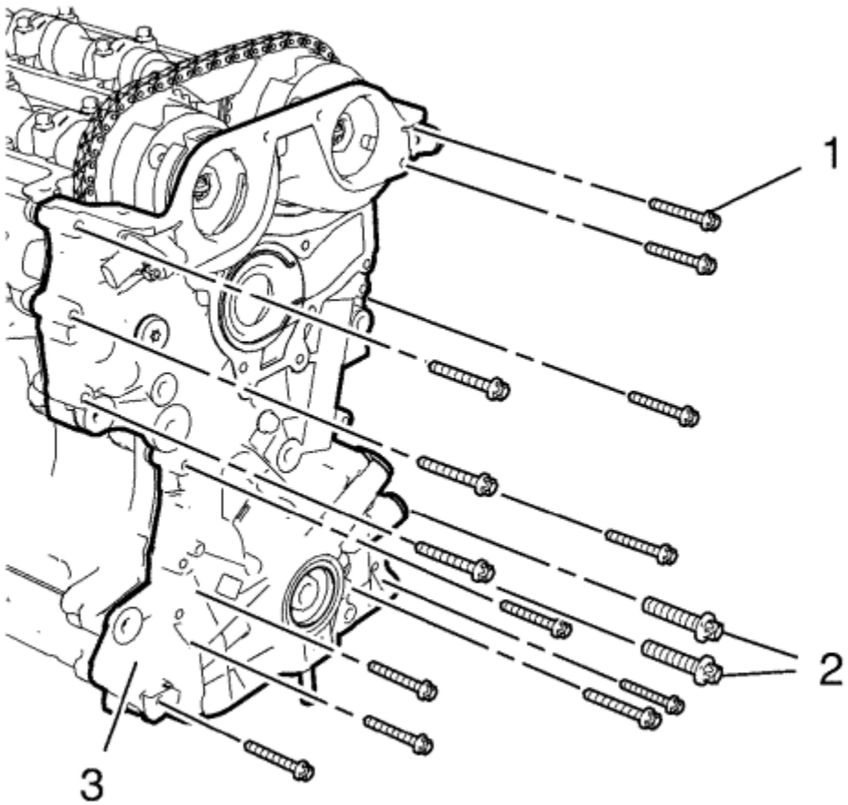

2. Remove the 13 engine front cover bolts M6 (1).
3. Remove the 2 engine front cover bolts M10 (2).
4. Remove the engine front cover.

© Copyright Chevrolet. All rights reserved

Camshaft Timing Chain Removal

Special Tools

- *EN-952* Fixing Pin
- *EN-953-A* Fixing Tool
- *EN-955-1* Fixing Pin from *EN-955* Kit

For equivalent regional tools, refer to Special Tools .

1. The engine should be adjusted to TDC.
2. The crankshaft should be fixed with *EN-952* fixing pin.
3. The camshaft should be fixed with *EN-953-A* fixing tool.

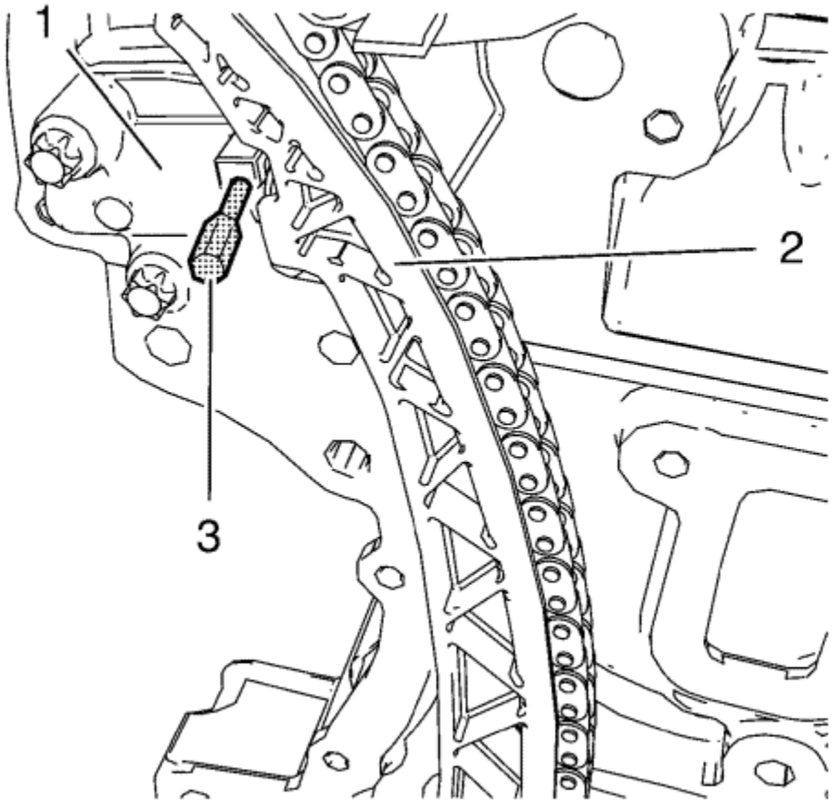

4. Push the timing chain (2) in direction to the timing chain tensioner (1) and fix the tensioner with *EN-955-1* fixing pin (3).

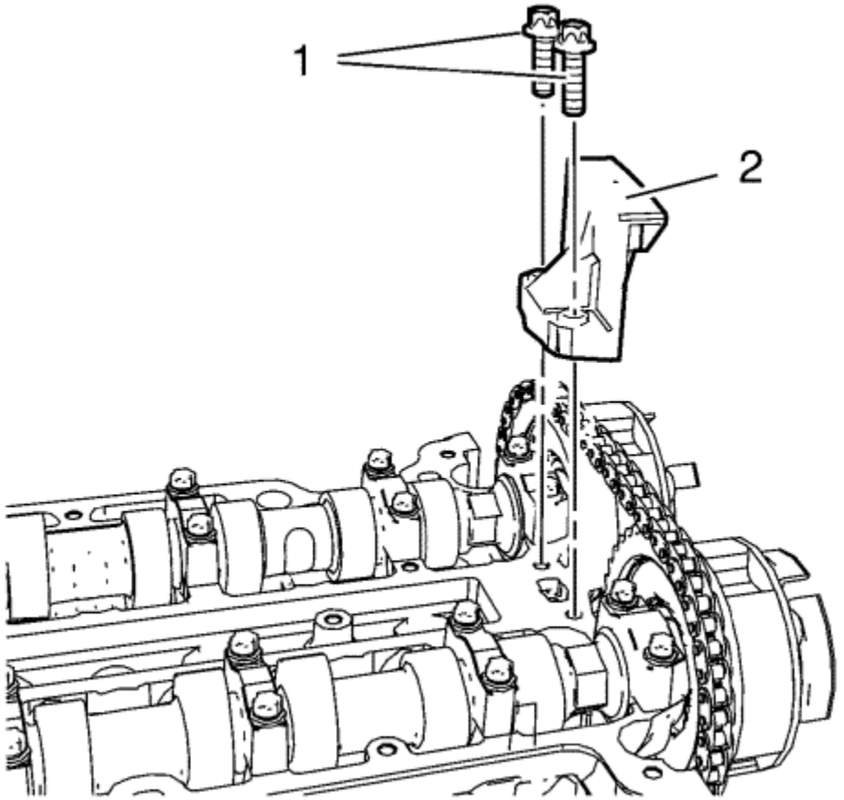

5. Remove the 2 upper timing chain guide bolts (1).
6. Remove the upper timing chain guide (2).

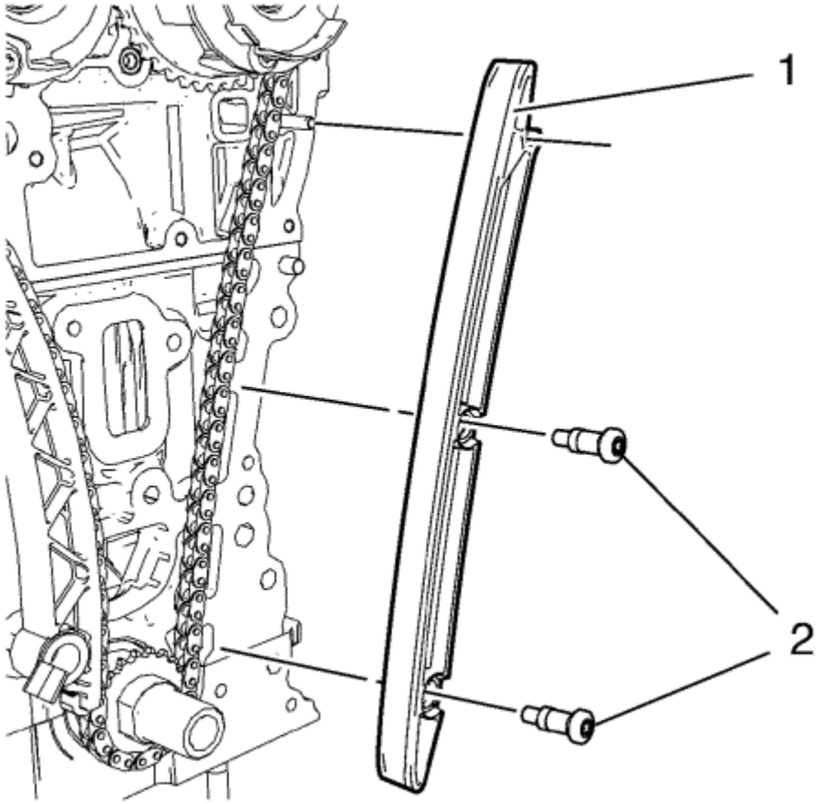

7. Remove the 2 timing chain guide right side bolts (2).
8. Remove the timing chain guide right side (1).

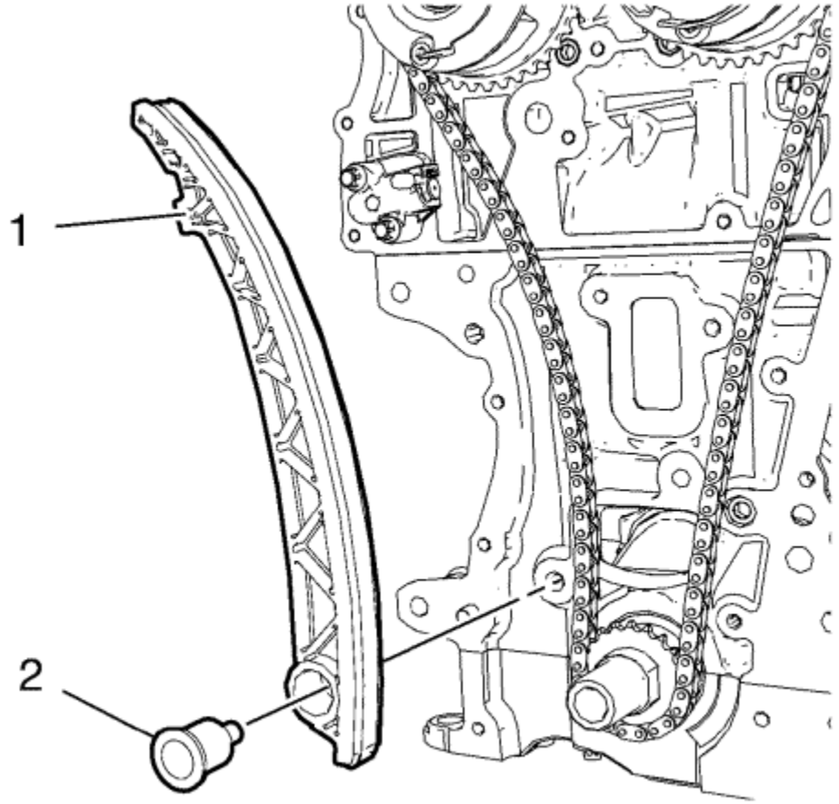

9. Remove the timing chain tensioner shoe bolt (2).
10. Remove the timing chain tensioner shoe (1).

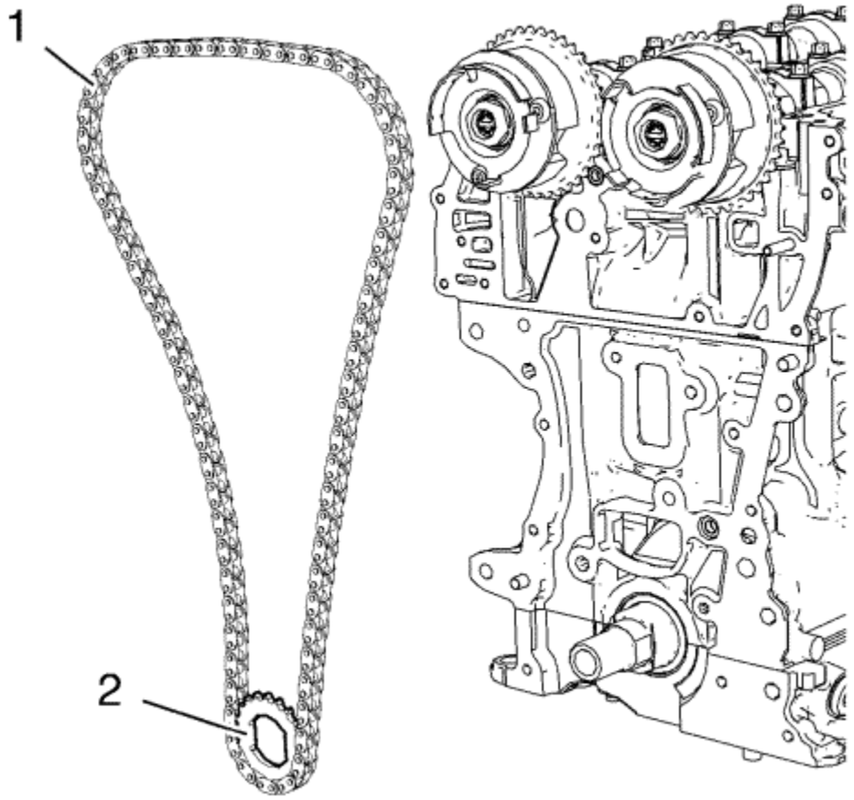

11. Remove the timing chain (1) in compound with the crankshaft sprocket (2).

&#169© Copyright Chevrolet. All rights reserved

Timing Chain Tensioner Removal

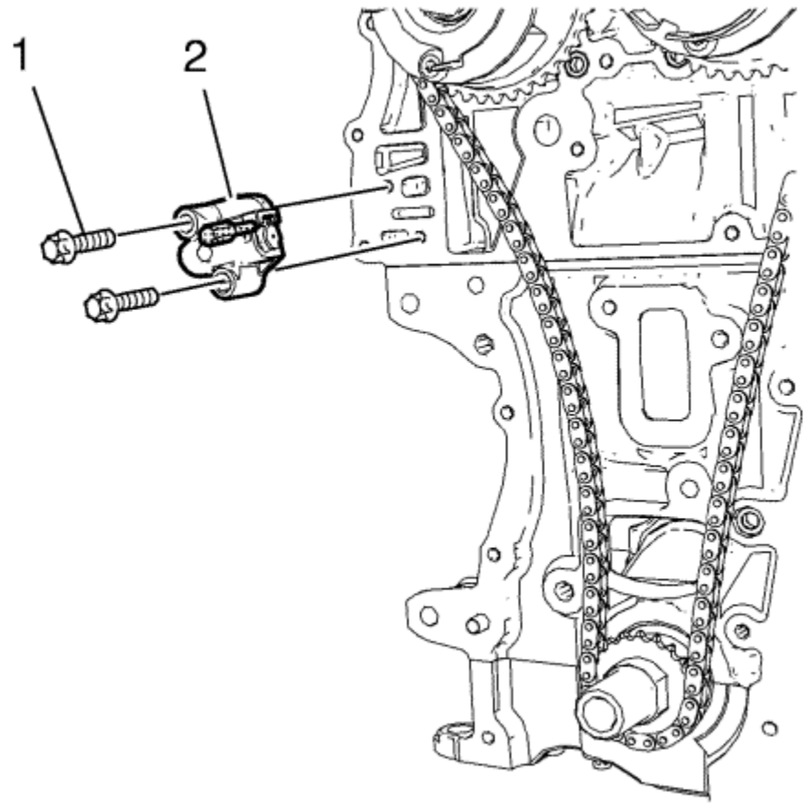

1. Remove the 2 timing chain tensioner bolts (1).
2. Remove the timing chain tensioner (2).

© Copyright Chevrolet. All rights reserved

Engine Front Cover Gasket Removal

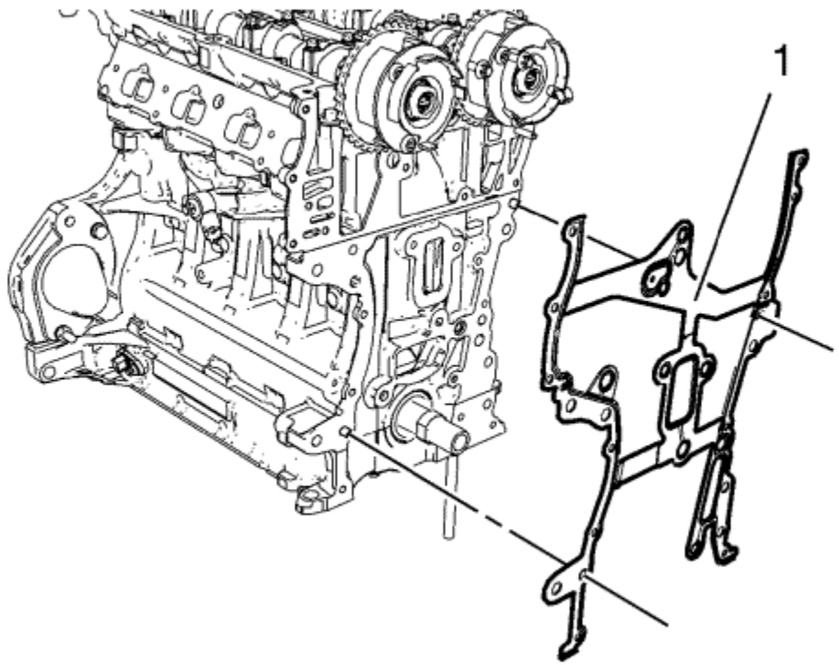

Remove the engine front cover gasket (1).

© Copyright Chevrolet. All rights reserved

Camshaft Sprocket Removal

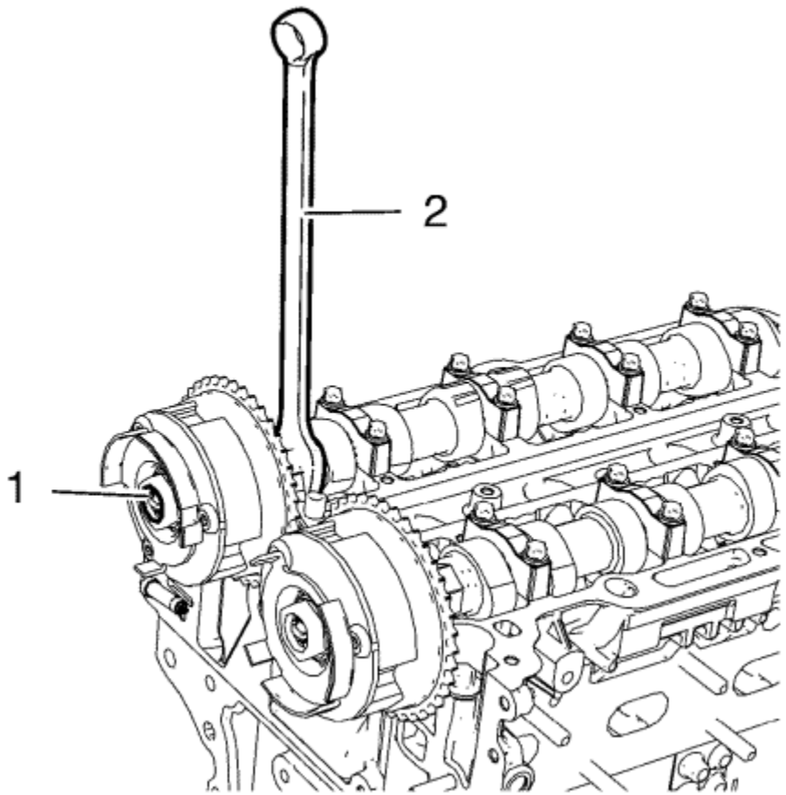

1. Loosen the inlet camshaft sprocket bolt (1) while holding the hexagon of inlet camshaft (2) with a spanner.

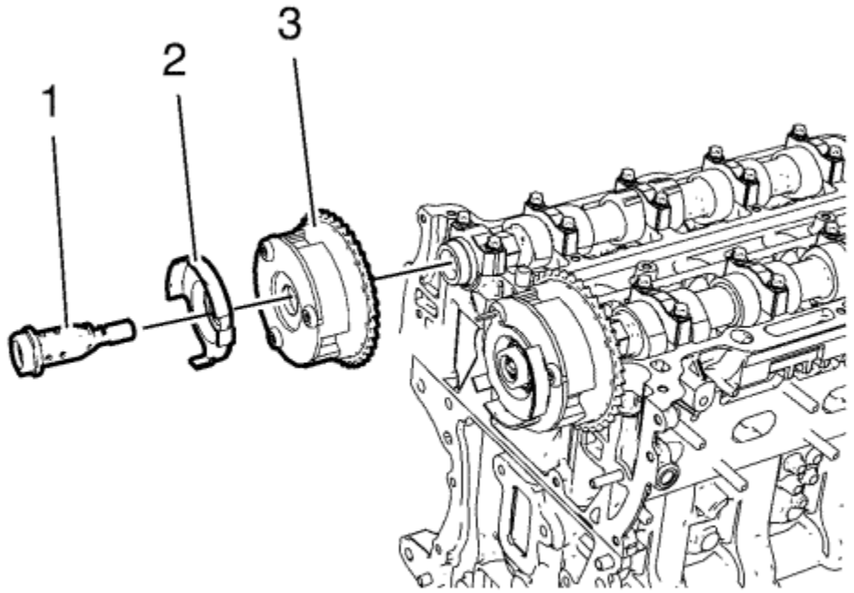

2. Remove the inlet camshaft sprocket bolt (1) and the inlet camshaft position exciter wheel (2).
3. Remove the inlet camshaft sprocket (3).
4. Loosen the exhaust camshaft sprocket bolt while holding the hexagon of exhaust camshaft with a spanner.
5. Remove the exhaust camshaft sprocket bolt and the exhaust camshaft position exciter wheel.
6. Remove the exhaust camshaft sprocket.

© Copyright Chevrolet. All rights reserved

Intake Camshaft Removal

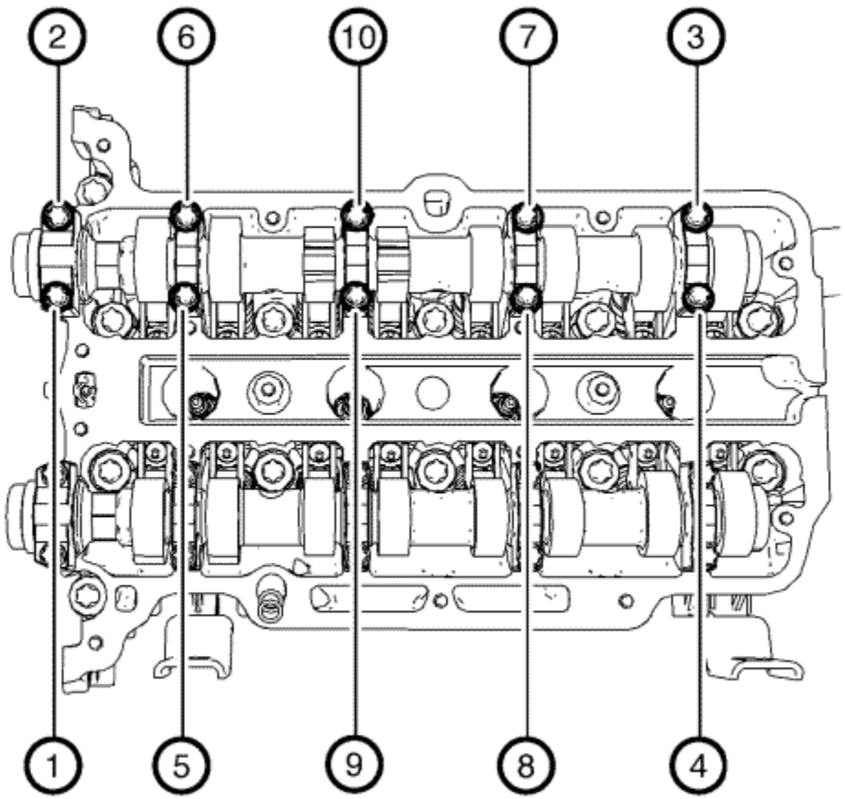

1. Remove the camshaft bearing cap bolts in a spiral sequence as shown one turn at a time until there is no spring tension pushing on the camshaft.

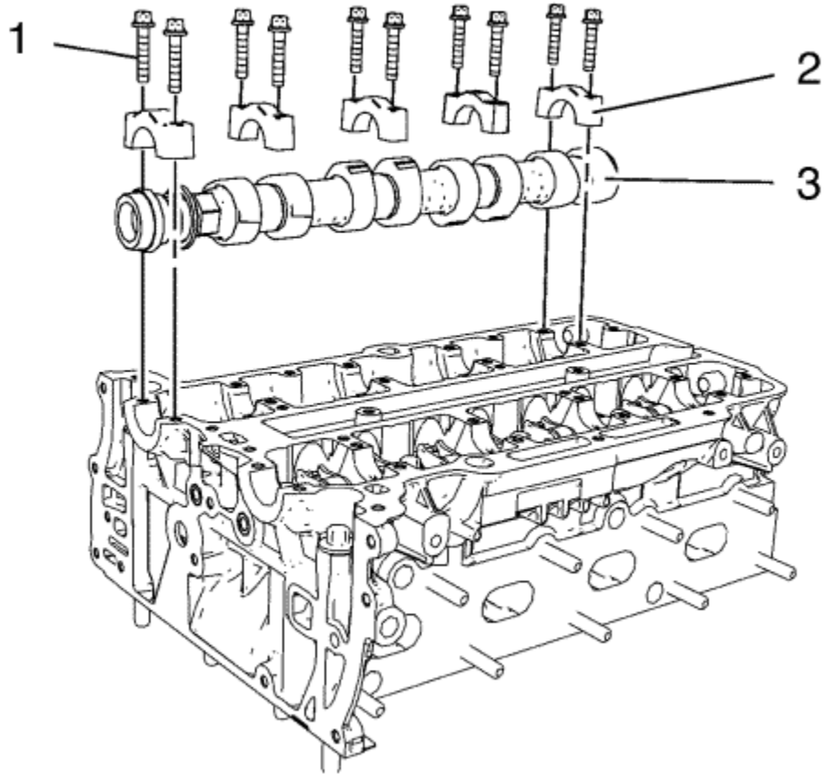

Note: Mind the markings on the camshaft bearing caps to ensure they will be installed in the same position.

2. Remove the 10 camshaft bearing cap bolts (1).
3. Remove the 5 camshaft bearing caps (2).
4. Remove the intake camshaft (3).

© Copyright Chevrolet. All rights reserved

Exhaust Camshaft Removal

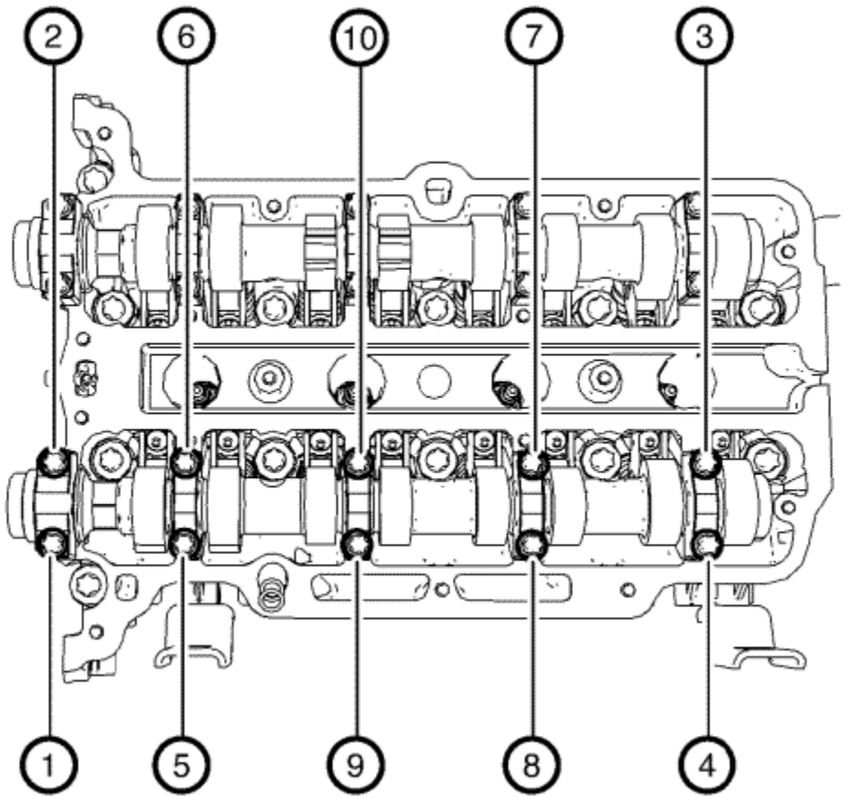

1. Remove the camshaft bearing cap bolts in a spiral sequence as shown one turn at a time until there is no spring tension pushing on the camshaft.

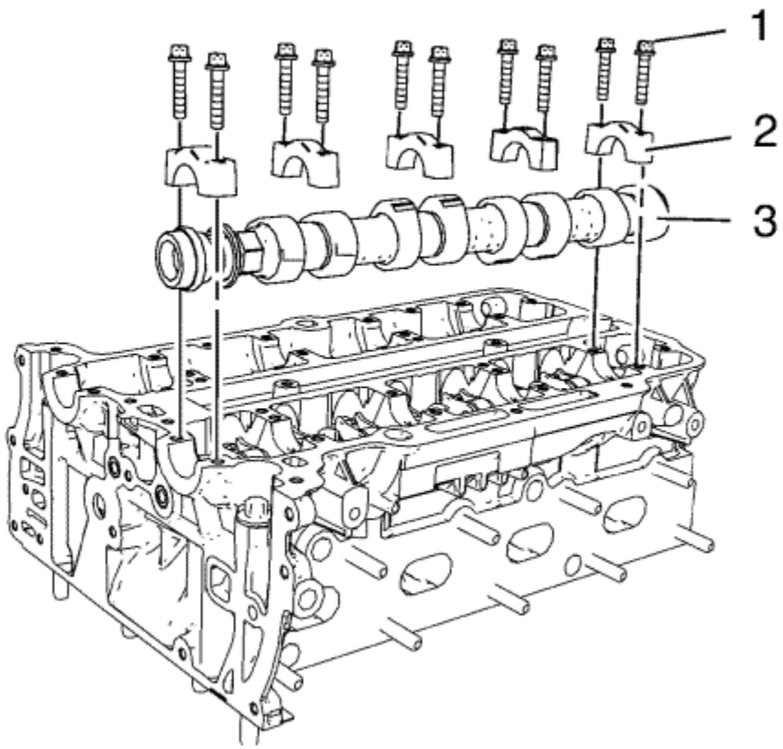

Note: Mind the markings on the camshaft bearing caps to ensure they will be installed in the same position.

2. Remove the 10 camshaft bearing cap bolts (1).
3. Remove the 5 camshaft bearing caps (2).
4. Remove the exhaust camshaft (3).

© Copyright Chevrolet. All rights reserved

Hydraulic Valve Clearance Adjuster Arm Removal

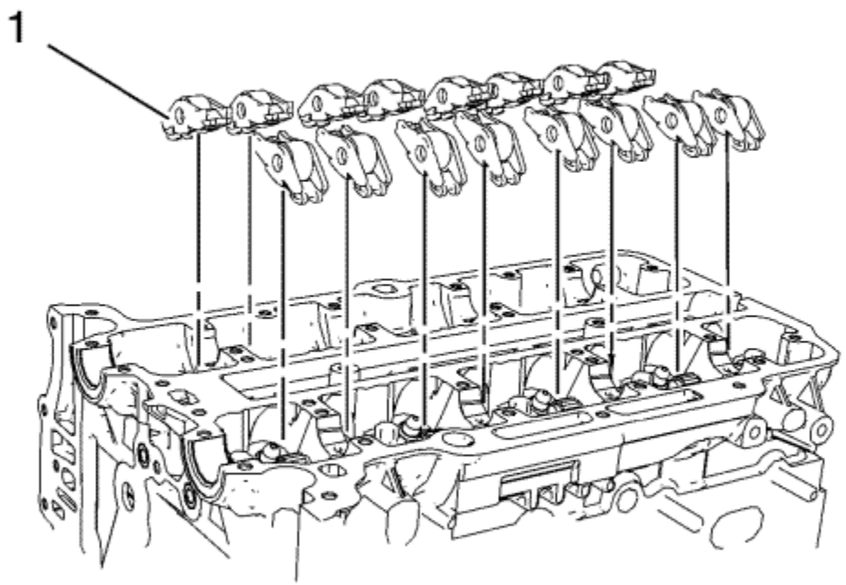

Note: Mind the installation position of the hydraulic valve clearance adjuster arms.

Remove the 16 hydraulic valve clearance adjuster arms (1).

© Copyright Chevrolet. All rights reserved

Hydraulic Valve clearance Adjuster Removal

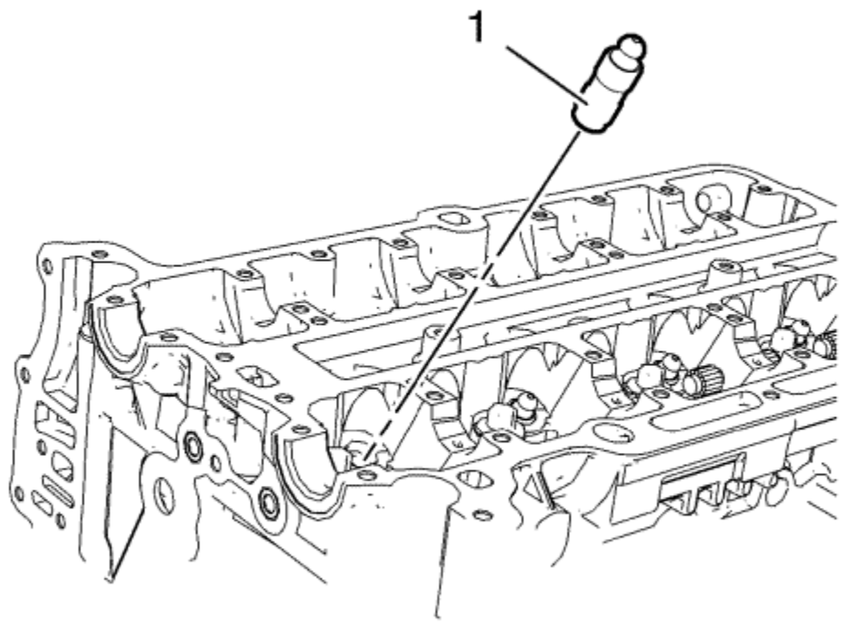

Note: Mind the installation position of the hydraulic valve clearance adjusters.

Remove the 16 hydraulic valve clearance adjusters (1).

© Copyright Chevrolet. All rights reserved

Cylinder Head Removal

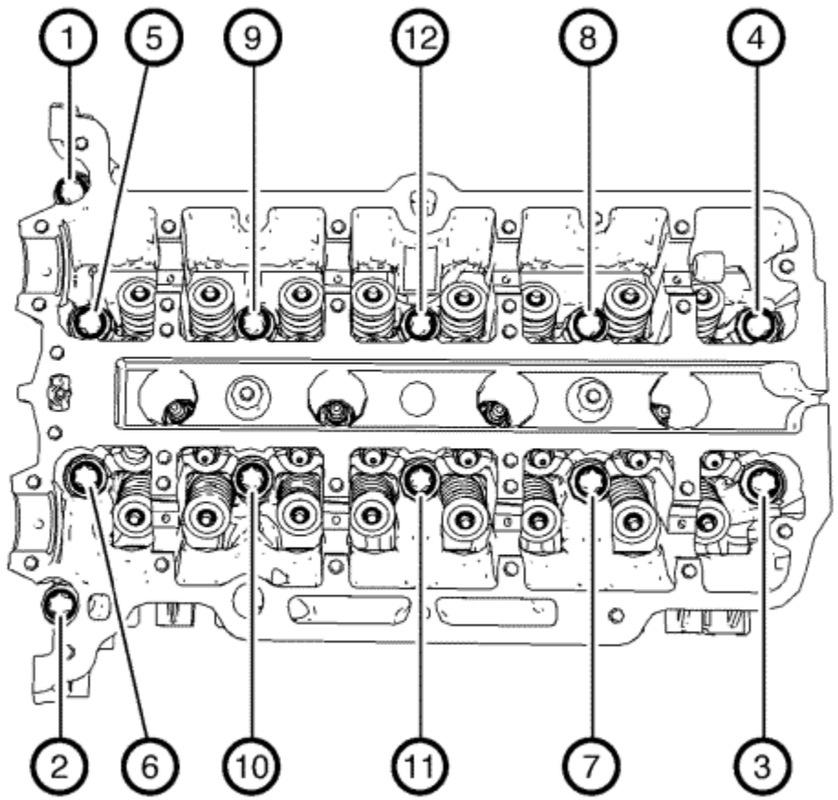

1. Loosen the 12 cylinder head bolts in the sequence as shown. Use the following procedure:
   1.1. Loosen the cylinder head bolts **90°**.
   1.2. Loosen the cylinder head bolts **180°**.

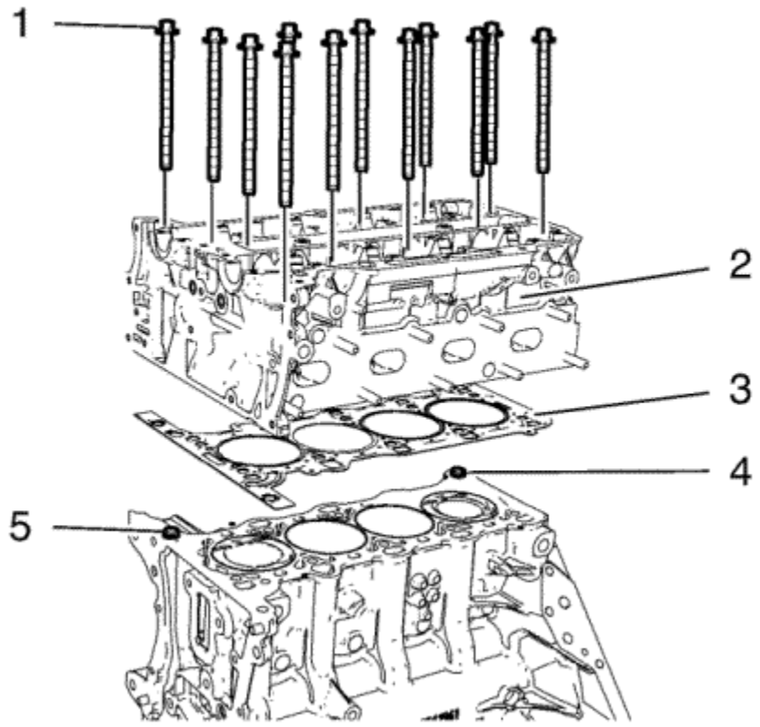

Note: Do not damage the guide sleeves (4) and (5).

2. Remove the 12 cylinder head bolts (1).
3. Remove the cylinder head (2).
4. Remove the cylinder head gasket (3).

© Copyright Chevrolet. All rights reserved

Piston, Connecting Rod, and Bearing Removal

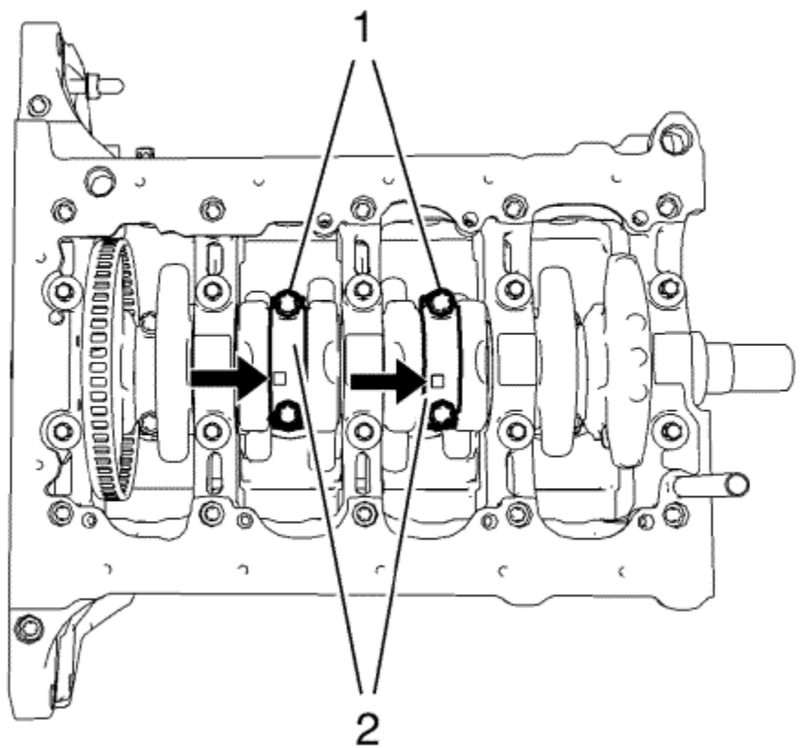

Note: Mark the installation position of the connecting rod bearing caps. The connecting rod bearings and bearing caps must not be interchanged with other connecting rods.

1. Remove the 4 connecting rod bearing cap bolts (1) of cylinder 2 and 3.
2. Remove the 2 connecting rod bearing caps (2) and the 2 connecting rod bearings of cylinder 2 and 3.
3. Rotate the crankshaft **180°**.

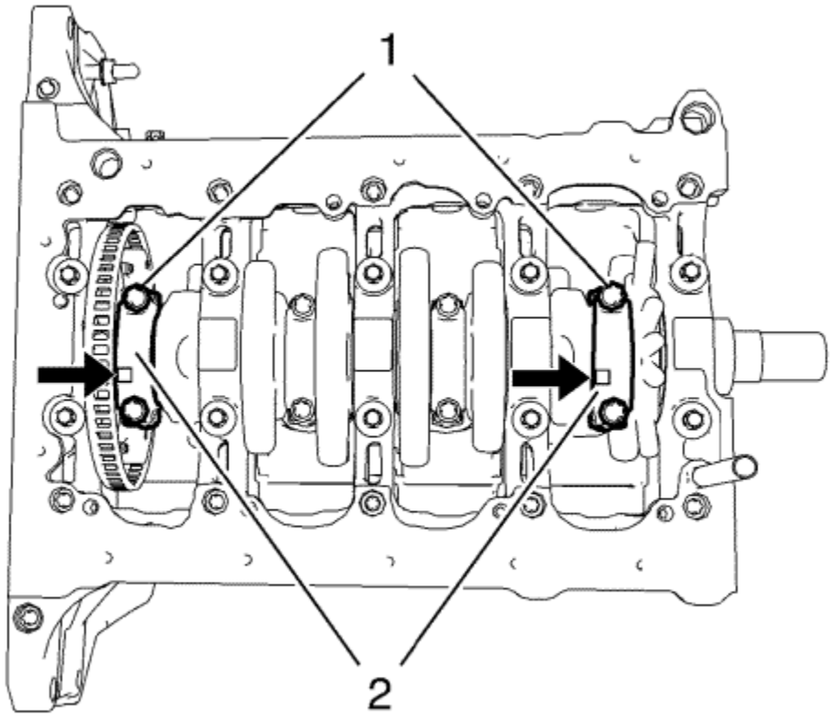

4. Remove the 4 connecting rod bearing cap bolts (1) of cylinder 1 and 4.
5. Remove the 2 connecting rod bearing caps (2) and the 2 connecting rod bearings of cylinder 1 and 4.

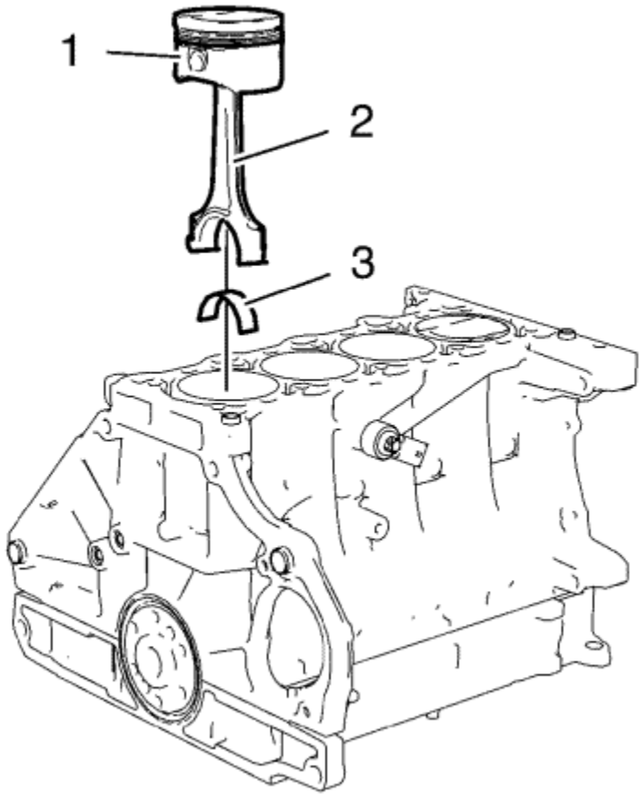

6. Remove the 4 pistons (1) and connecting rods (2) and the 4 upper connecting rod bearings (3) from the cylinder block.

© Copyright Chevrolet. All rights reserved

Crankshaft and Bearing Removal

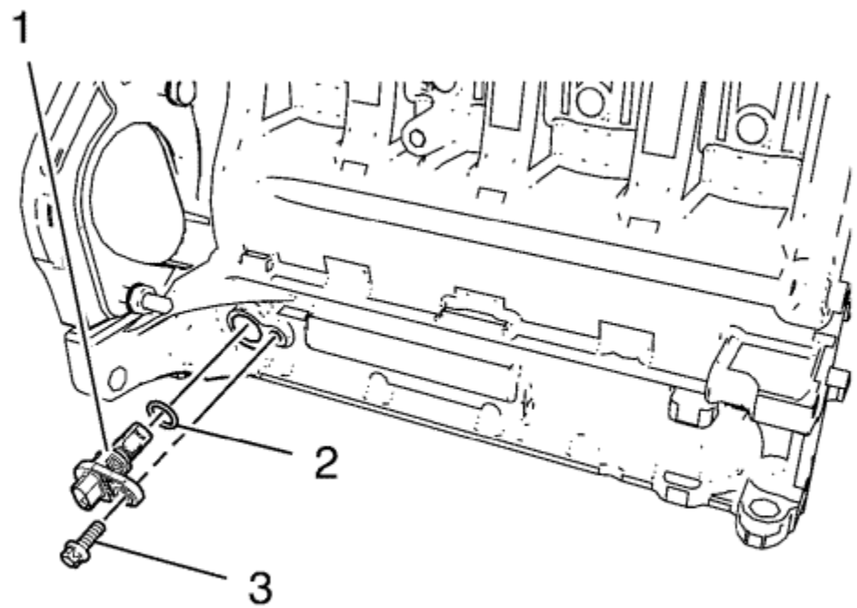

1. Remove the crankshaft position sensor bolt (3).
2. Remove the crankshaft position sensor (1) and the crankshaft position sensor seal ring (2).

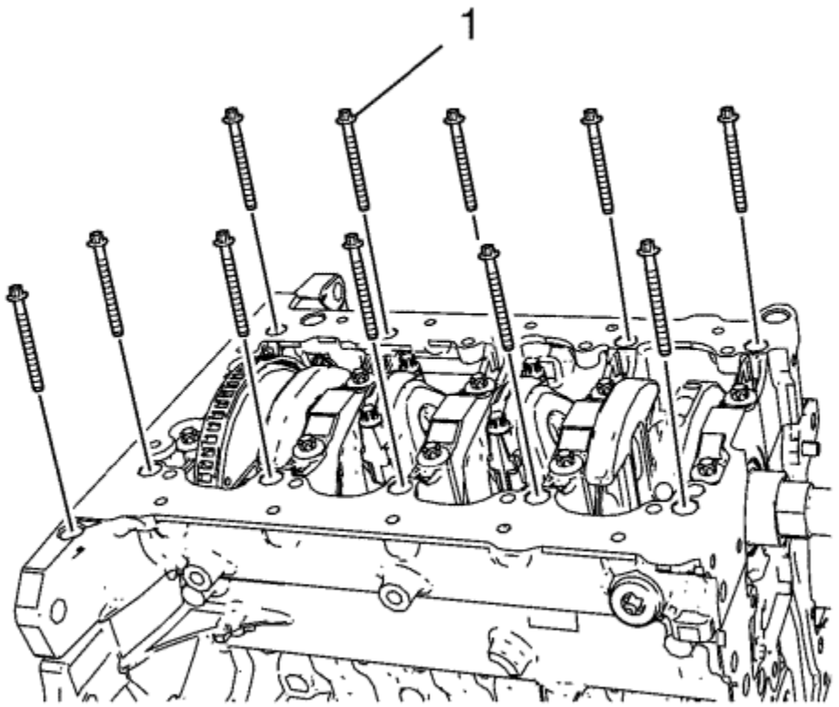

3. Remove the 12 outer crankshaft bearing cap tie plate bolts (1).

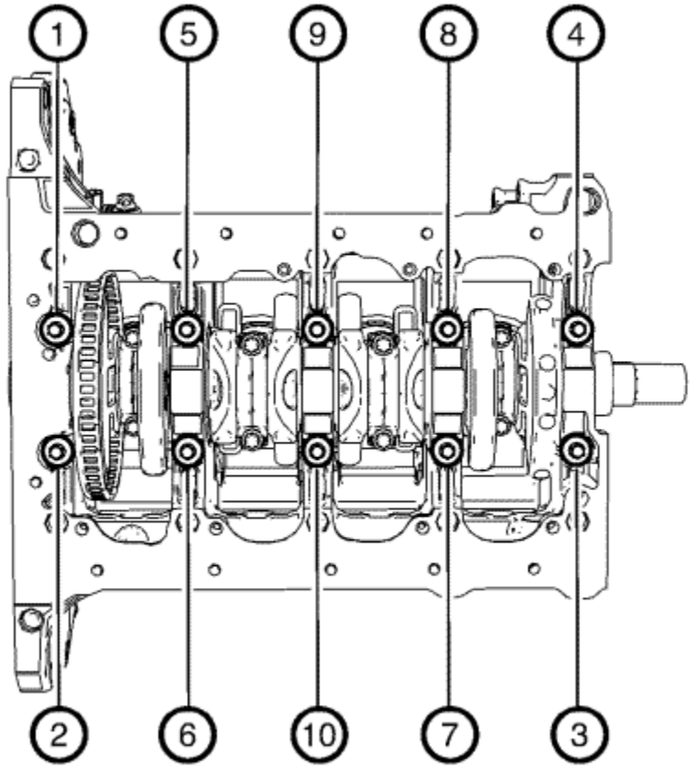

4. Loosen the 10 inner crankshaft bearing cap tie plate bolts in a sequence as shown.

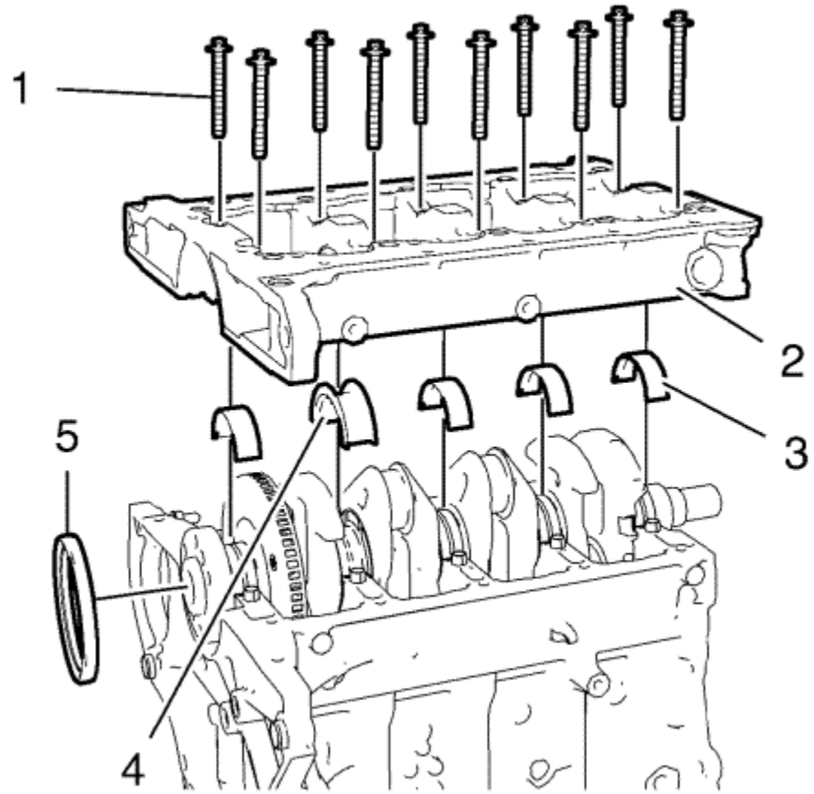

5. Remove the 10 crankshaft bearing cap tie plate bolts (1)

   Remove the crankshaft bearing cap tie plate (2).

6. Remove the 4 lower crankshaft bearings (3) and the lower crankshaft thrust bearing (4).
7. Remove the crankshaft rear oil seal (5).

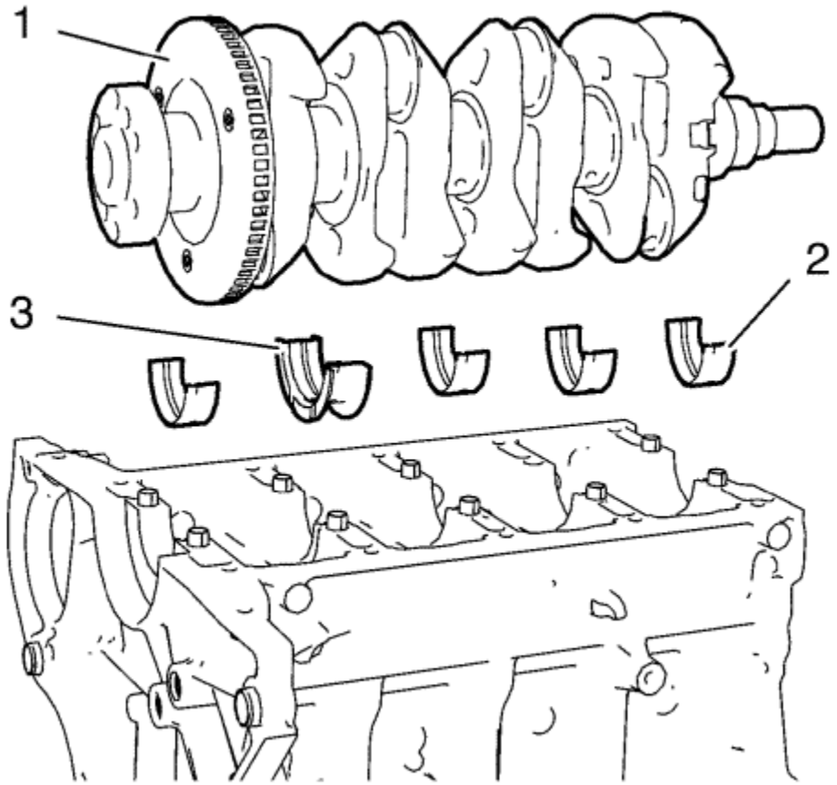

8. Remove the crankshaft (1), the 4 upper crankshaft bearings (2) and the upper crankshaft thrust bearing (3).

© Copyright Chevrolet. All rights reserved

Cylinder Head Disassemble

Special Tools

- *EN-6215* Mounting Equipment
- *EN-6167* Support Set
- *EN-6086* Spring And Wedge Replacer Kit
- *EN-6171* Release Tool
- *EN-849* Assembly Tray
- *EN-840* Pliers / Remover

For equivalent regional tools, refer to Special Tools .

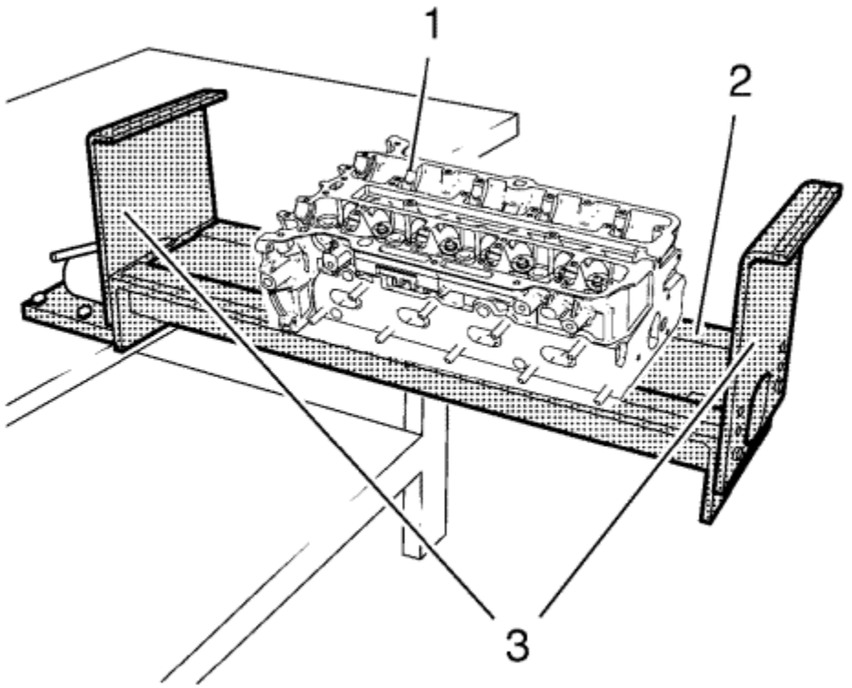

1. Install the cylinder head (1) to *EN-6215-1* mounting table (2) in compound with *EN-6215-5* sidewise support (3). Fix the cylinder head with the appropriate short bolts.

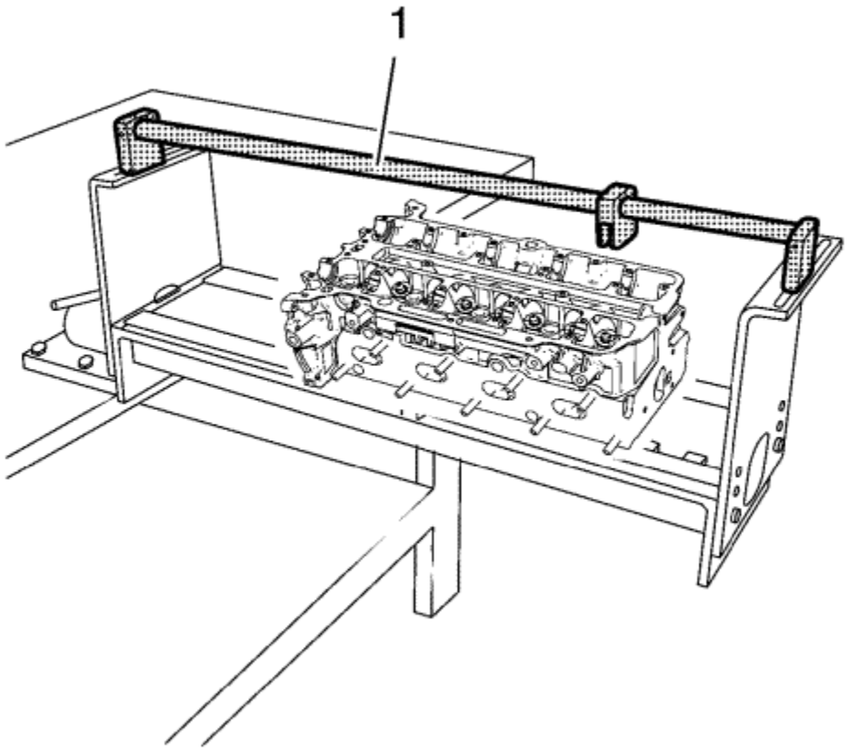

2. Install *EN-6215-4* handle (1) to *EN-6215-1* mounting table.
3. Turn the cylinder head **180°**.
4. Rework the spark plug threads.

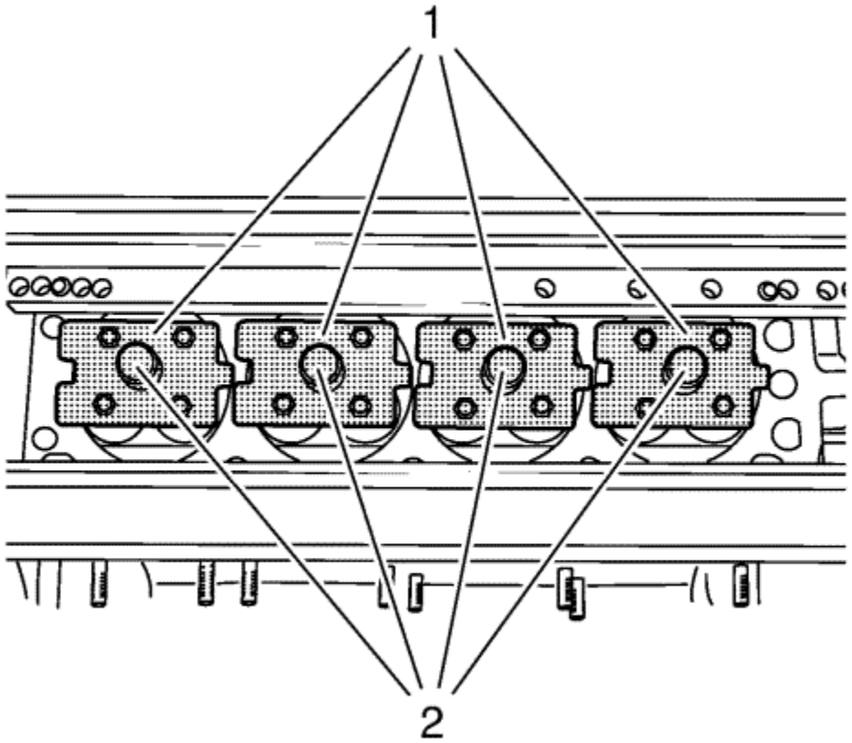

5. Install 4 *EN-6167-1* brace (1) and fix with *EN-6167-5* bolts (2) in order to support the valves.

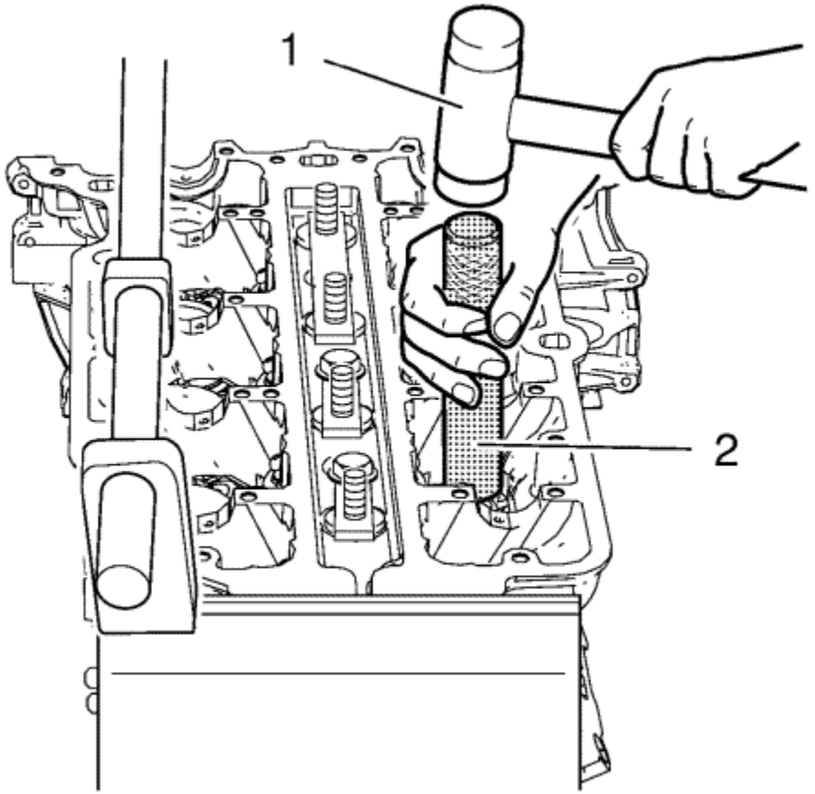

6. Solve the valve spring retainers with an easy hammer hit. Use a rubber mallet (1) and *EN-6171* release tool (2).

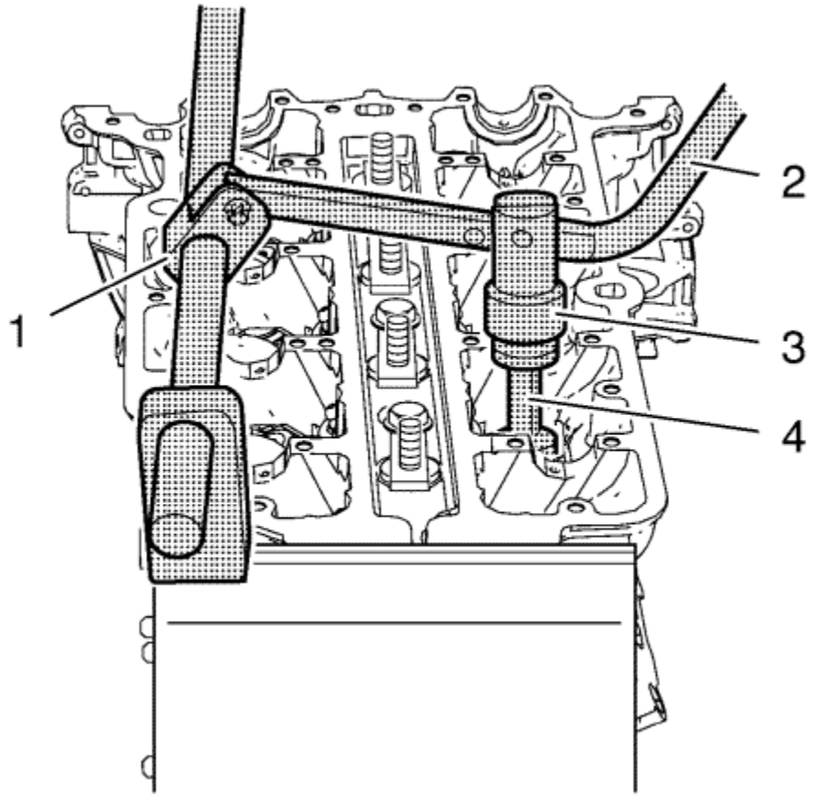

7. Install *EN-6086-7* lever arm (2) to the handle (1).
8. Install *EN-6086-11* demounting piece (4) in compound with *EN-6086-1* adapter (3) to the lever.

   Note: The demounting piece must be applied parallel to the valve spring retainers in order to prevent damage to the tools or the valve train components.

9. Press down the valve springs and the upper valve spring retainers until the valve keys are discharged from spring load. Remove the valve keys.

   Note: Mind the installation position of valve springs, valve spring retainers and valve keys

10. Remove valve springs and valve spring retainers and place to *EN-849* assembly tray to ensure they will be installed in their original position.

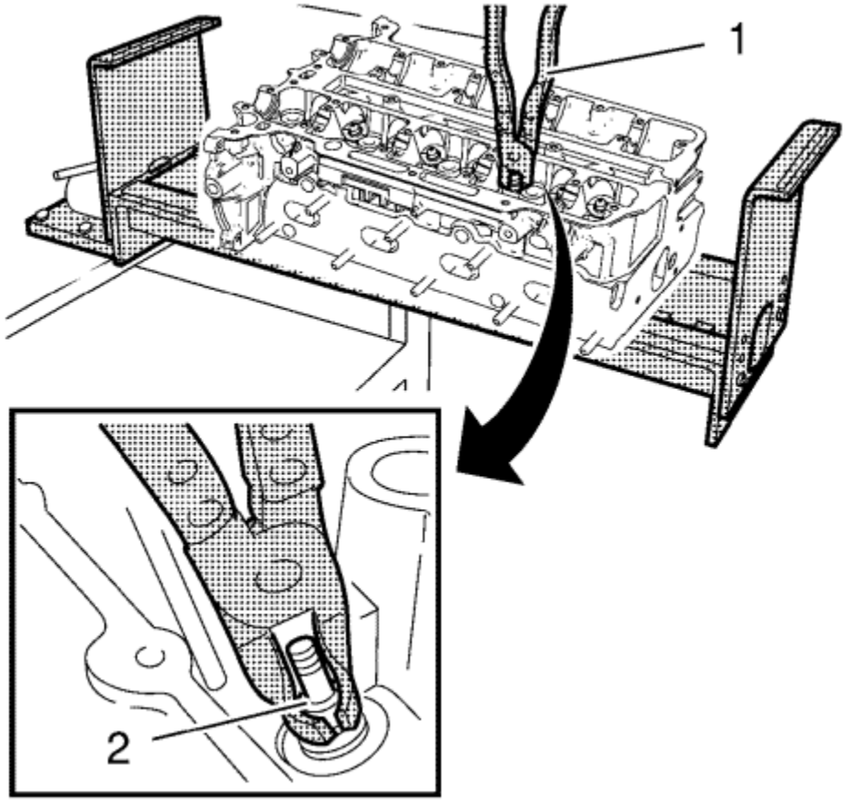

11. Remove the valve stem oil seals (2). Use *EN-840* pliers (1).
12. Remove *EN-6167-5* bolts and *EN-6167-1* brace.

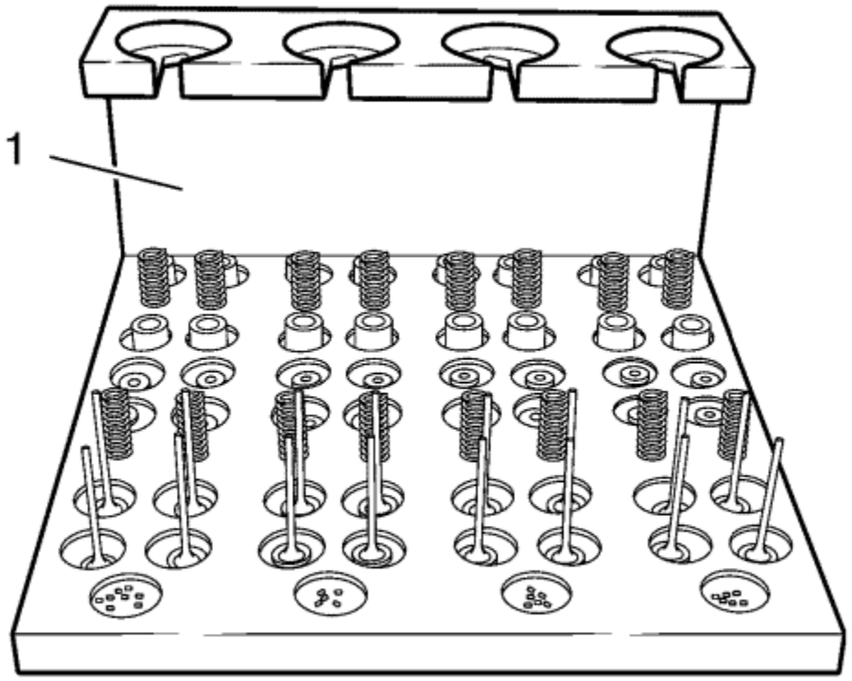

Note: Mind the installation position of the valves.

13. Remove the valves and place to *EN-849* assembly tray (1) to ensure they will be installed in their original position.

&#169© Copyright Chevrolet. All rights reserved

Cylinder Head Cleaning and Inspection

Special Tools

- *EN-6216* Gauge
- *EN-6216-200/300/400* Gauge Instruments
- *GE-571-B* Gauge

For equivalent regional tools, refer to Special Tools .

Cleaning Procedure

1. Remove any old thread sealant, gasket material or sealant.
2. Clean all cylinder head surfaces with non-corrosive sealant.

   Warning: Refer to Safety Glasses Warning in the Preface section.

3. Blow out all the oil galleries using compressed air.
4. Remove any carbon deposits from the combustion chamber.

Visual Inspection

1. Inspect the cylinder head camshaft bearing surfaces for the following conditions:
   - Excessive scoring or pitting
   - Discolouration from overheating
   - Deformation from excessive wear
   - If the camshaft bearing journals appear to be scored or damaged, you must replace the cylinder head. DO NOT machine the camshaft bearing journals.
2. If any of the above conditions exist on the camshaft bearing surfaces, replace the cylinder head.
3. Inspect the cylinder head for the following:
   - Cracks, damage or pitting in the combustion chambers.
   - Swarf in the oil galleries -- Continue to clean the galleries until all swarf is removed.
   - Coolant leaks or damage to the deck face sealing surface -- If coolant leaks are present, measure the surface warpage as described under cylinder head measurement - deck flatness inspection.

- Damage to any gasket surfaces.
- Burnt or eroded areas in the combustion chamber.
- Cracks in the exhaust ports and combustion chambers.
- External cracks in the water passages.
- Restrictions in the inlet or exhaust passages.
- Restrictions in the cooling system passages.
- Rusted, damaged or leaking core plugs.

4. If the cylinder head is cracked or damaged, it must be replaced. No welding or patching of the cylinder head is allowed.

Valve Inspection And Measurement

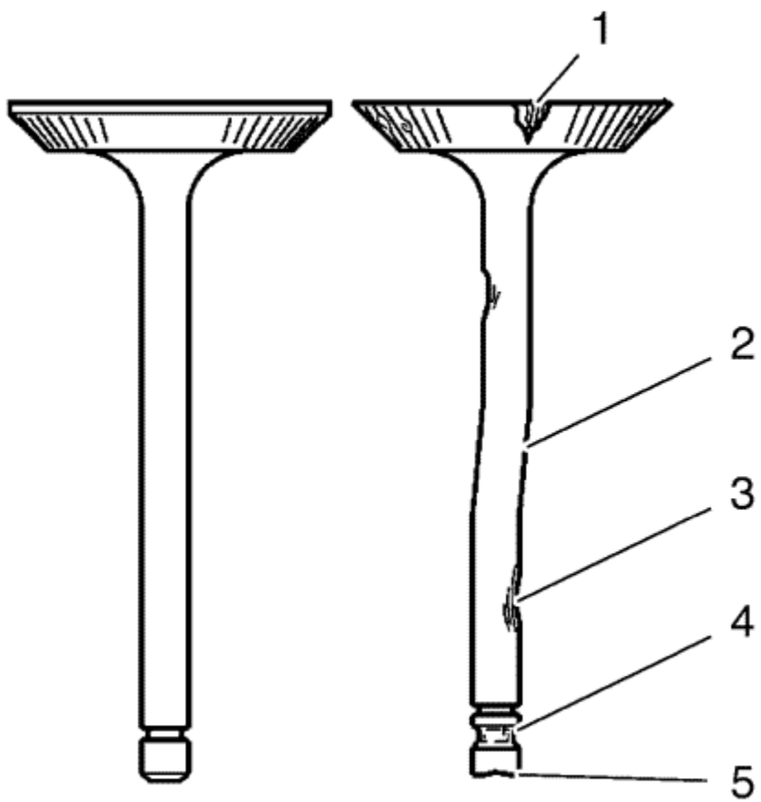

1. Clean the valves of carbon and oil. Carbon can be removed with a wire brush.

2. Inspect the valves for the following conditions:
   2.1. Inspect the valve faces for burning and cracking (1). If pieces are broken, replace the valve and inspect the corresponding piston and cylinder head area for damage.
   2.2. Inspect the valve for straightness and distortion (2). Distorted valve must be replaced.
   2.3. Inspect the valve stem for wear (3).
   2.4. Inspect the valve key grooves for chipping and wear (5). Replace the valve if chipped or worn.

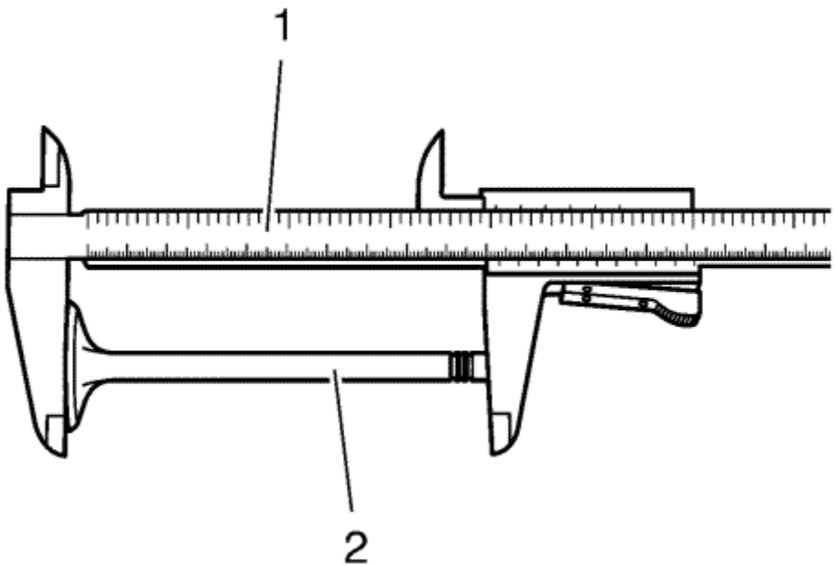

3. Measure the valve length (2). Use a slide gauge (1). Refer to Engine Mechanical Specifications to find the permitted values.

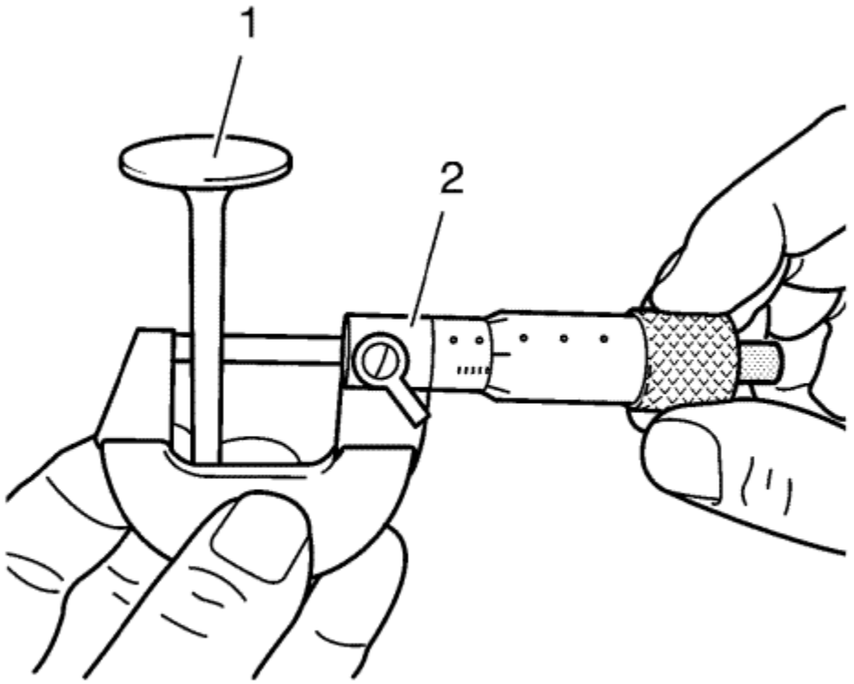

4. Measure the valve stem diameter. Use a micrometer gauge (2). Refer to Engine Mechanical Specifications to find the permitted values. Note the measurement results.

Cylinder Head Measurement

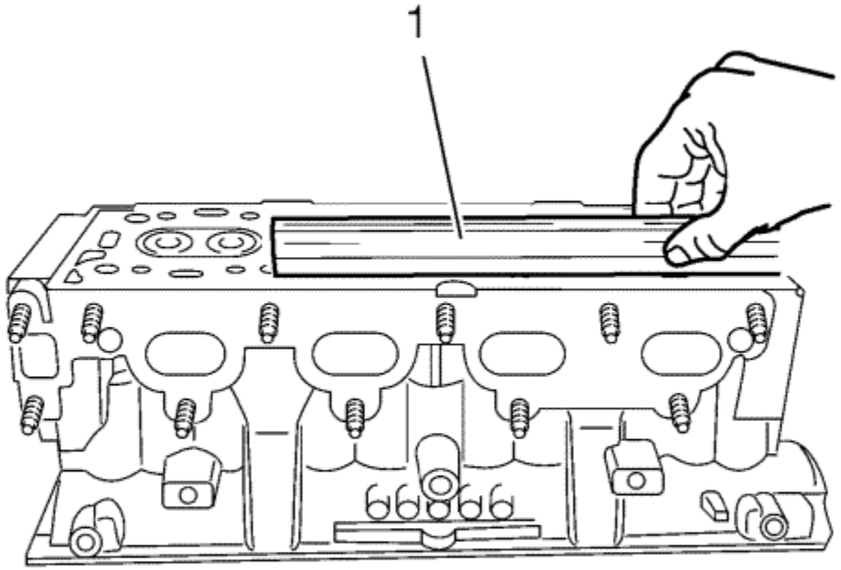

1. Inspect the cylinder head sealing surface for flatness. Use a straightedge (1).

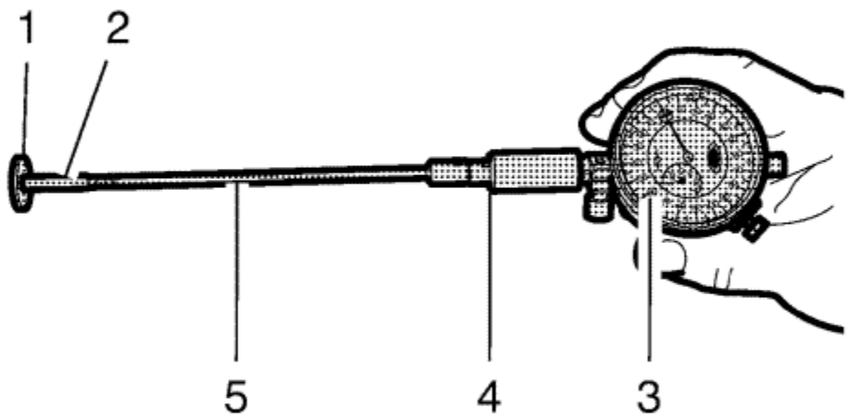

2. Prepare the gauge for valve stem to guide clearance measurement. Assemble the *EN-6216* gauge and the *EN-6216-200/300/400* gauge instruments as follows:
   2.1. Install the extension (5) to the support (4).
   2.2. Install the inside calliper (2) to the extension (5).
   2.3. Install the gauge (3) to the support (4) and pretension to **1 mm (0.0394 in)**.
   2.4. Install the calibration washer (1) as shown to justify the gauge.
   2.5. Adjust the gauge to **0 mm (0 in)** by rotating the instrument dial.
   2.6. Carefully remove the calibration washer (1).

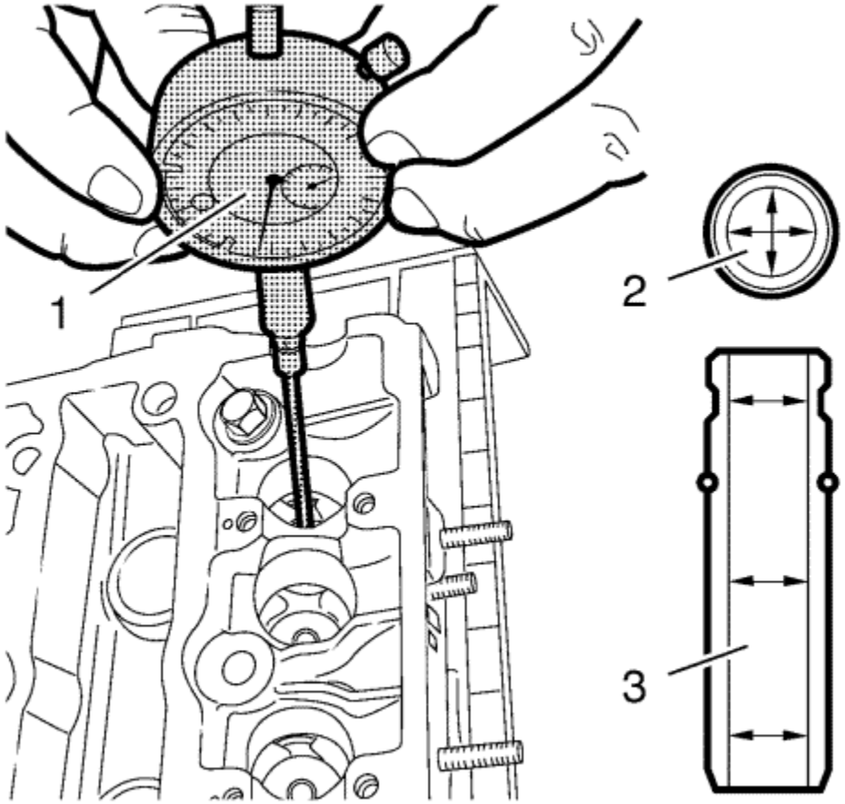

3. Measure the valve guide inner diameter (2) as shown in different areas (3). Use *EN-6216* gauge (1) and gauge instruments. Note the measurement results. Refer to Engine Mechanical Specifications to find the permitted values.
4. Subtract the valve stem diameter from valve guide inner diameter to calculate the valve stem to guide clearance. Refer to Engine Mechanical Specifications to find the permitted values.
5. Turn the cylinder head upside down.

&#169© Copyright Chevrolet. All rights reserved

Cylinder Head Assemble

Special Tools

- *EN-6215* Mounting Equipment
- *EN-6167* Support Set
- *EN 6086* Spring And Wedge Replacer Kit
- *EN-840* Pliers / Remover
- *EN-835-A* Installer

For equivalent regional tools, refer to Special Tools .

Note: Lubricate the valve guides and the valve stems with engine oil.

Note: Examine that the valves will be installed in their original position.

1. Install the 16 valves to the cylinder head.

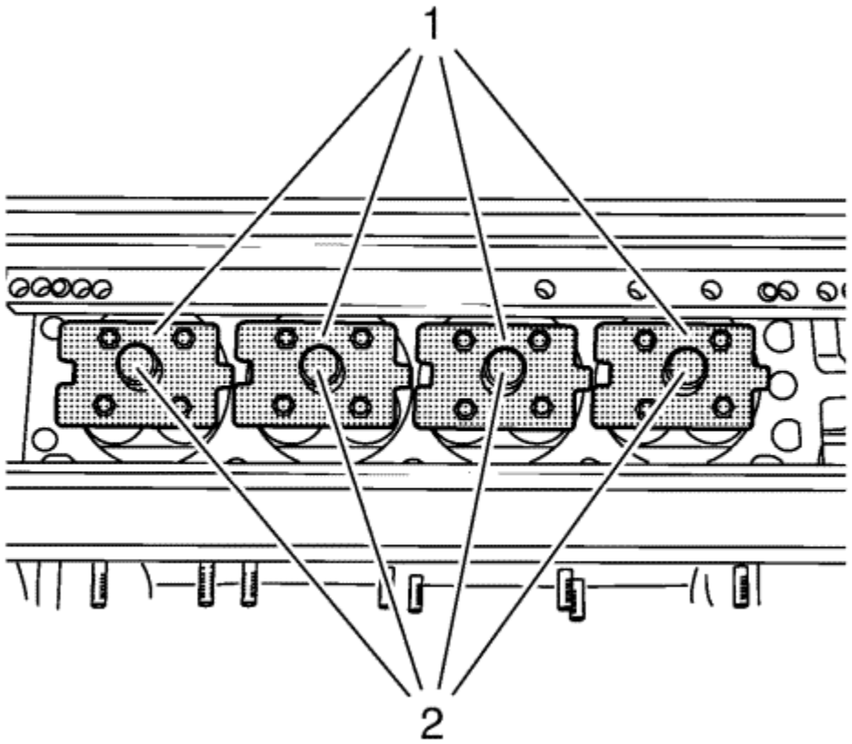

2. Install *EN-6167-1* braces (1) and fix with *EN-6167-5* bolts (2) in order to support the valves.
3. Install the 16 valve stem oil seals. Use *EN-835-A* installer to push down the valve stem oil seals.

   Note: Examine that the valve springs and the valve spring retainers will be installed in their original position.

4. Install the 16 valve springs and the 16 valve spring retainers.

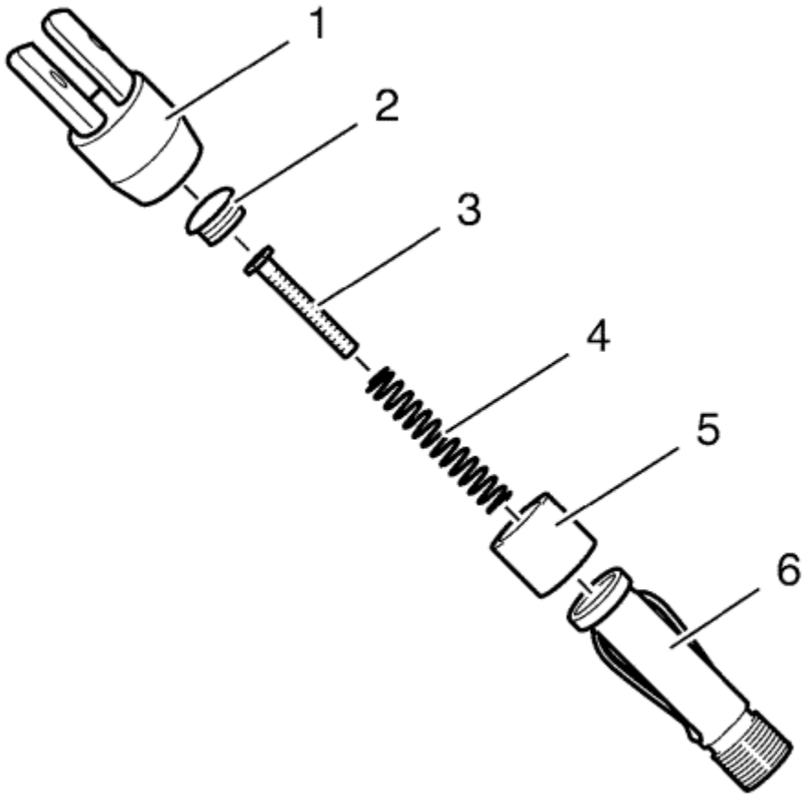

Note: A wrong combination of mounting piece and plunger can cause damage to the plunger or the valve keys.

5. Prepare *EN-6086-200-1* mounting piece for the valve key installation. The mounting piece must be assembled in the following order:
   5.1. Support (6)
   5.2. Bushing (5)
   5.3. Spring (4)
   5.4. *EN-6086-200-10* plunger (3)
   5.5. Screw connection (2)
   5.6. Lever adapter (1)

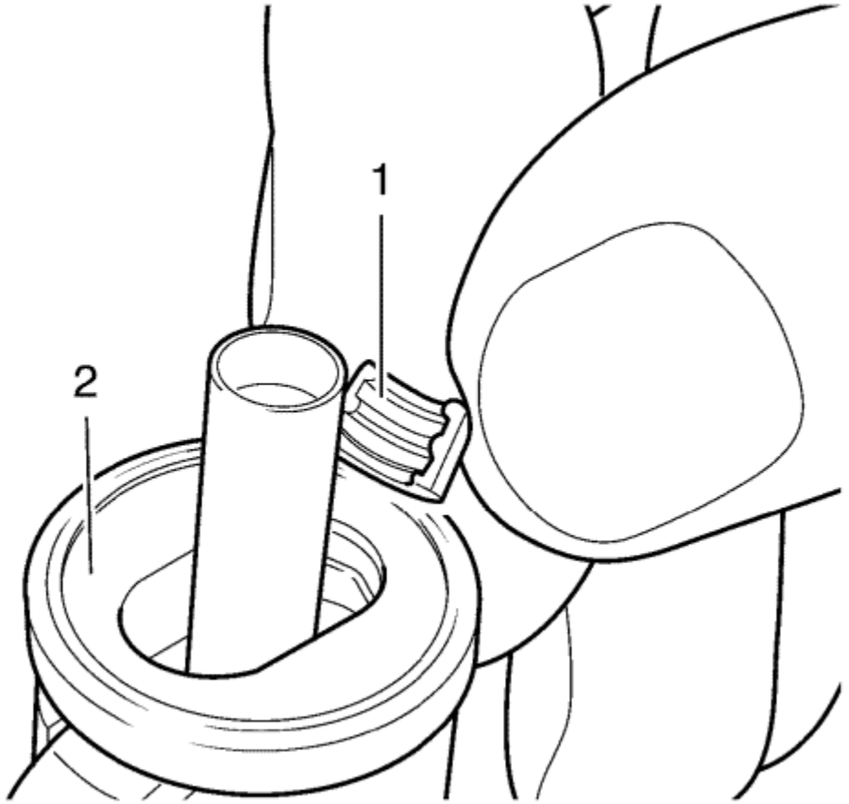

6. Install the valve keys (1) to the mounting piece (2) as shown and fix them with the bushing.

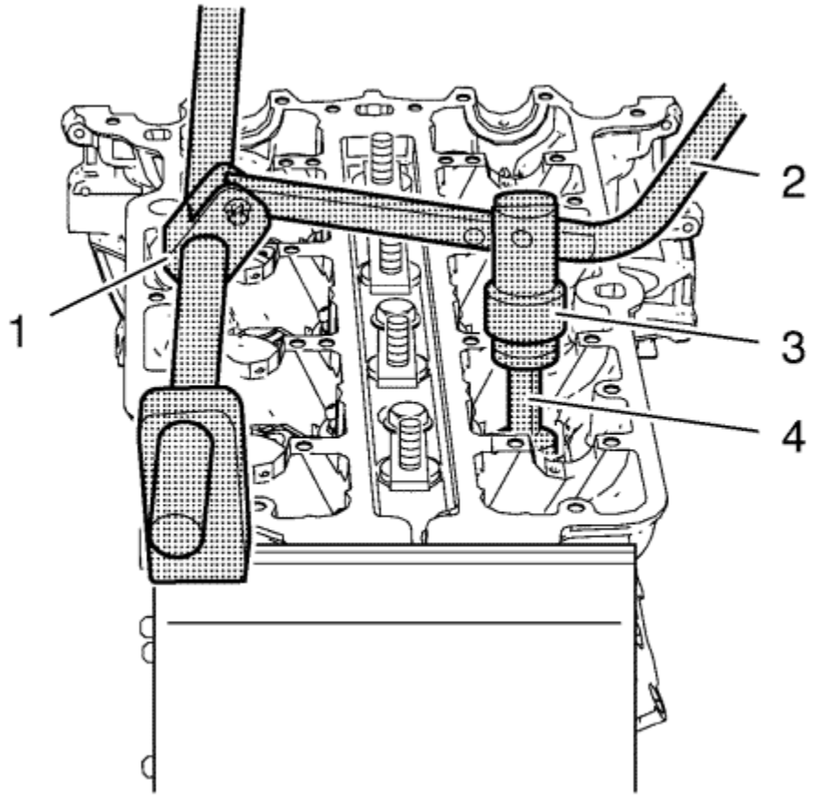

7. Install *EN-6086-7* lever (2) in compound with the lever adapter (3) and the mounting piece (4) to the handle (1).
8. Push the mounting piece slightly down until the valve keys audibly engage.
9. Repeat the procedure on the remaining 15 valves.
10. Remove *EN-6167-1* braces and *EN-6167-5* bolts.
11. Remove the cylinder head from the *EN-6215-1* mounting table.

&#169© Copyright Chevrolet. All rights reserved

Engine Block Disassemble

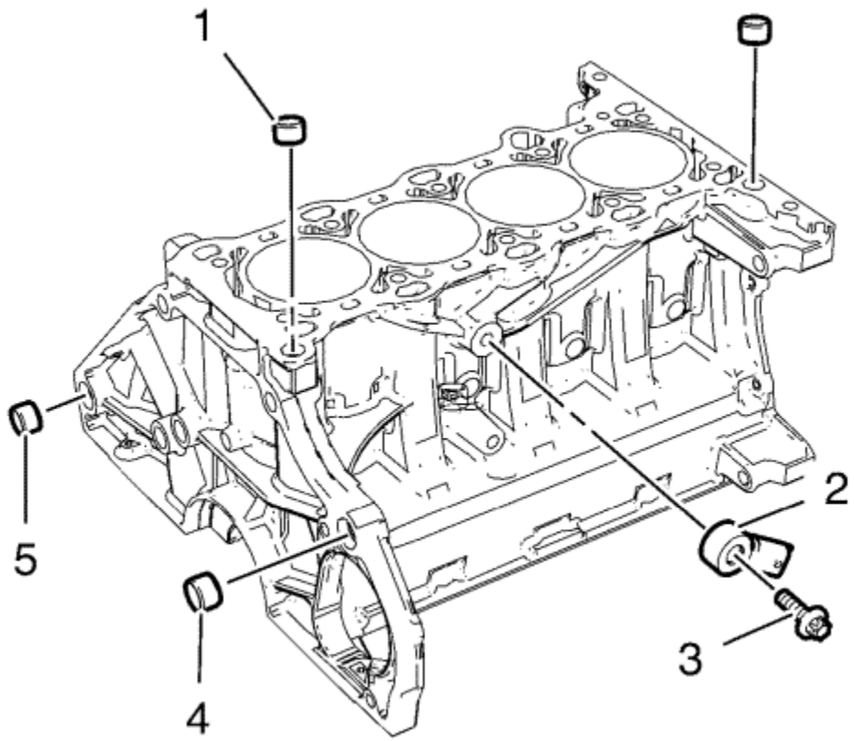

1. Remove the knock sensor bolt (3).
2. Remove the knock sensor (2).
3. Remove the 2 cylinder head guide sleeves (1). Use suitable pliers.
4. Remove the 2 transmission guide sleeves (4, 5). Use suitable pliers.

© Copyright Chevrolet. All rights reserved

Engine Block Assemble

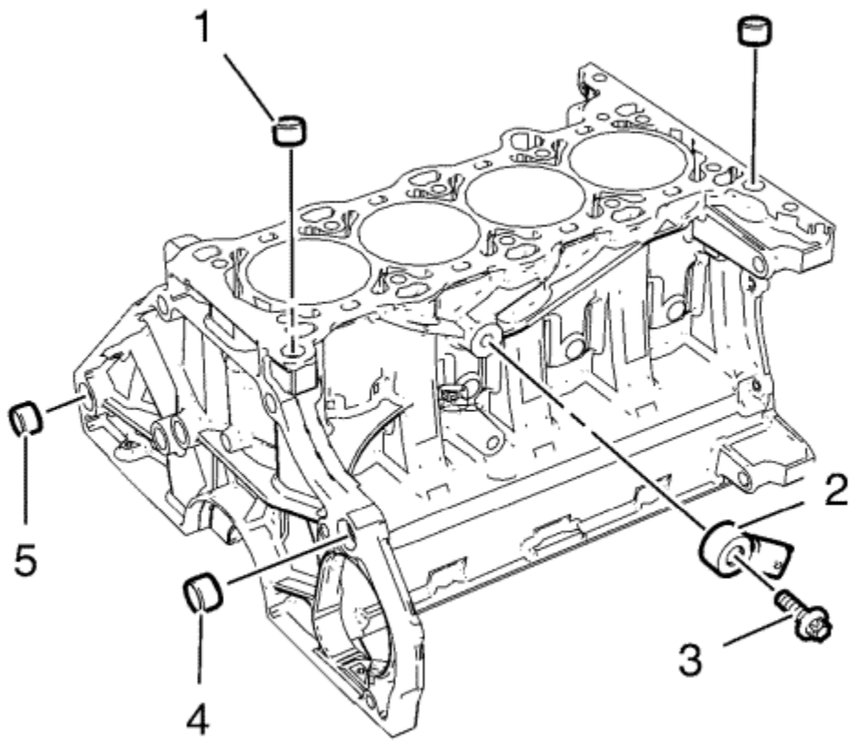

1. Install the knock sensor (2).

   Caution: Refer to Fastener Caution in the Preface section.

2. Install the knock sensor bolt (3) and tighten to **20 N·m (15 lb ft).**
3. Install the 2 cylinder head guide sleeves (1). Use a rubber mallet.
4. Install the 2 transmission guide sleeves (4, 5). Use a rubber mallet.

© Copyright Chevrolet. All rights reserved

Piston and Connecting Rod Disassemble

Warning: Handle the piston carefully. Worn piston rings are sharp and may cause bodily injury.

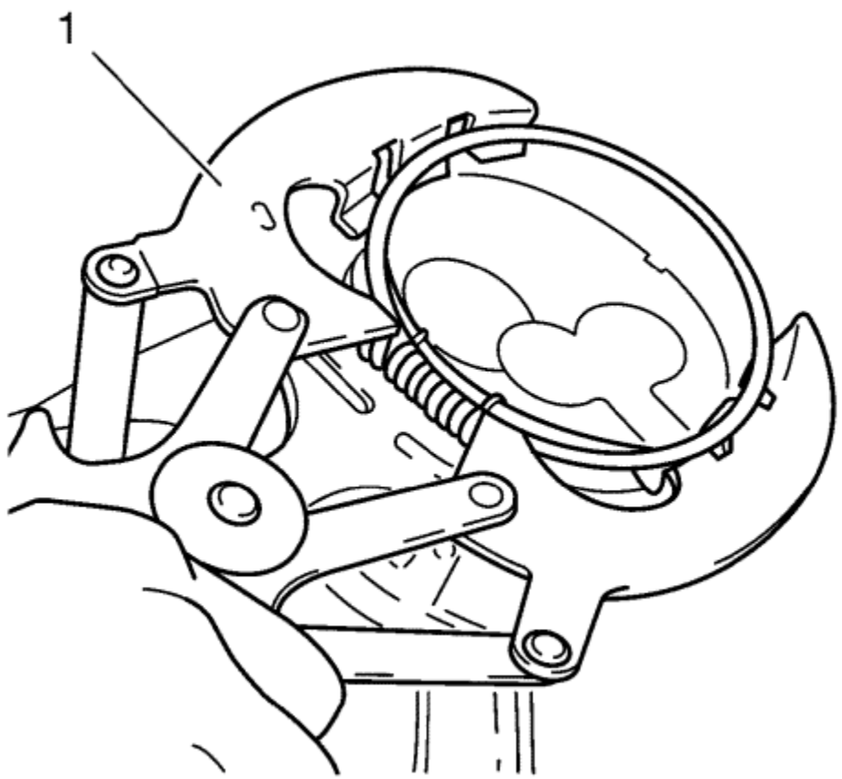

1. Remove the piston rings. Use piston ring pliers (1)

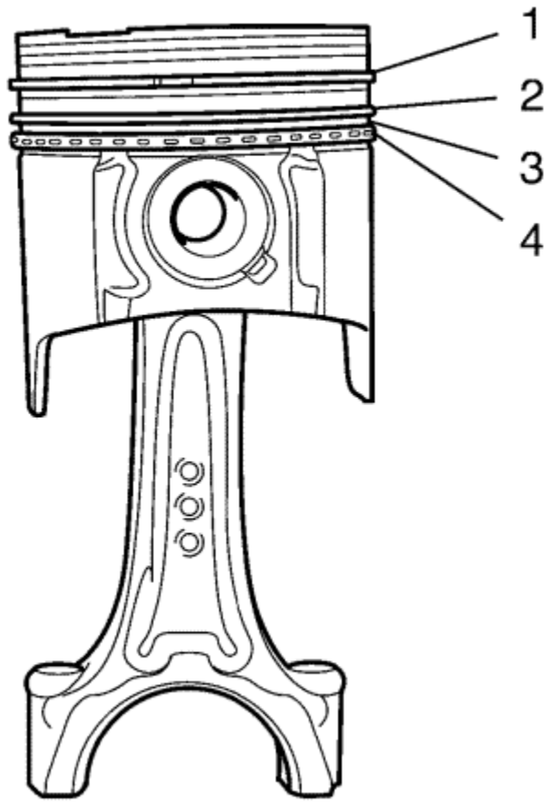

2. The piston rings are ordered as followed:
   - Upper compression ring (1)
   - Lower compression ring (2)
   - Oil rings and oil ring spacer (3, 4)

In case of damage on piston, piston pin or connecting rod all components of the piston assembly have to be replaced. The piston pin cannot be removed and reinstalled due to the shrink fit of connecting rod and piston pin.

&#169© Copyright Chevrolet. All rights reserved

Piston, Connecting Rod, and Bearing Cleaning and Inspection

Visual Inspection And Cleaning Procedure

Connecting Rod

Warning: Wear safety glasses when using compressed air in order to prevent eye injury.

1. Clean the connecting rods in solvent and dry with compressed air.
2. Inspect the connecting rod for the following:
   - Signs of being twisted, bent, nicked or cracked
   - Scratches or abrasion on the connecting rod bearing seating surfaces

Piston

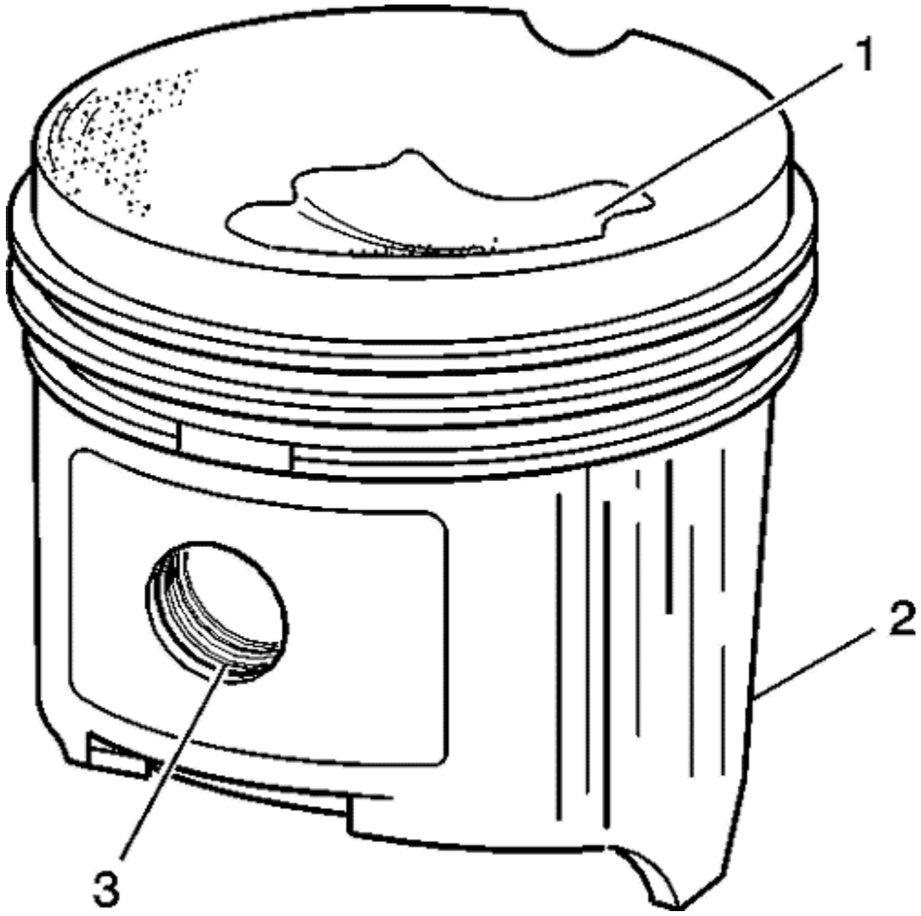

1. Clean the piston with a cleaning solvent. DO NOT wire brush any parts of the piston.
2. Clean the piston ring grooves.
3. Inspect the piston on the following:
   - Cracked ring lands, skirts or pin bosses
   - Ring grooves for nicks
   - Eroded areas on the top of the piston (1)
   - Scuffed or damaged skirts (2)
   - Worn gudgeon pin bores (3)
4. If there is any excessive wear, replace the piston.
5. Measure the clearance between piston pin and piston bore.

Piston And Connecting Rod Measurement Procedure

Piston Ring Clearance

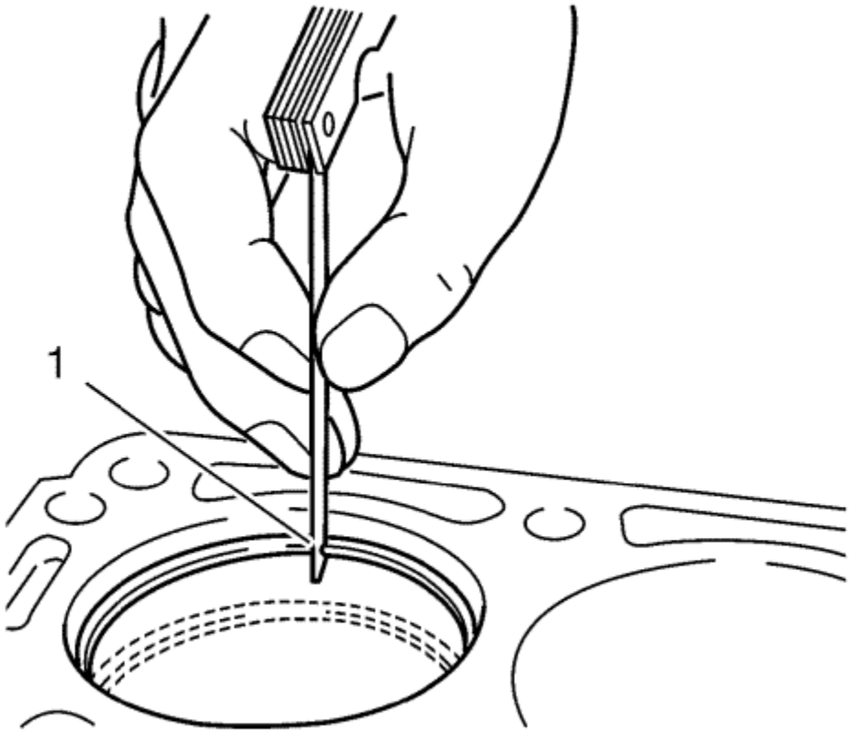

1. Install the piston rings to the cylinder as shown and measure the piston ring end gap (1). Compare the measurements with those provided below:
   - The upper compression ring end gap should be **0.250 mm - 0.400 mm (0.0098 in - 0.0157 in)**
   - The lower compression ring end gap should be **0.400 mm - 0.600 mm (0.0157 in - 0.0236 in)**
   - The oil ring end gap should be **0.250 mm - 0.750 mm (0.0098 in - 0.0295 in)**
2. If the clearance is greater than the provided specifications, the piston rings must be replaced.

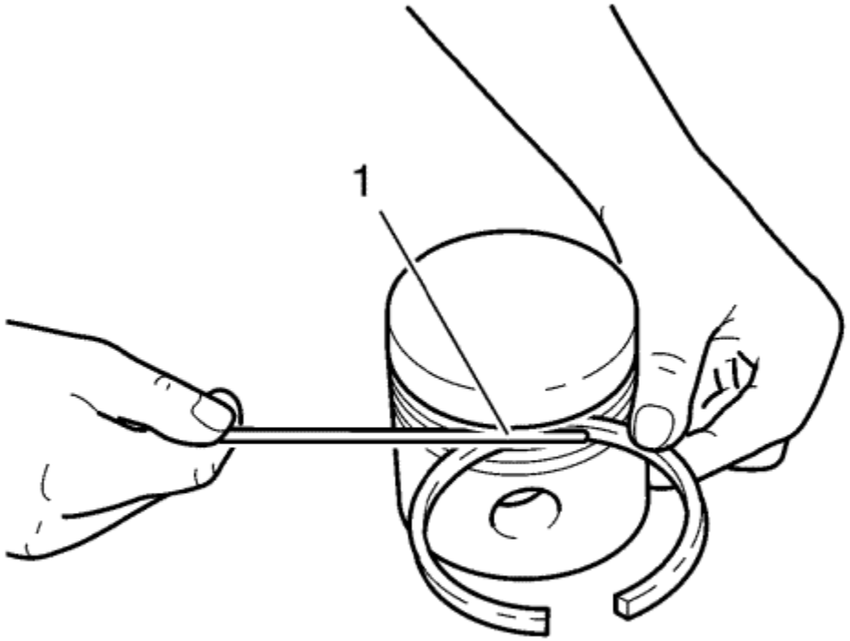

3. Measure the piston ring side clearance as shown (1). Compare the measurements with those provided below:
   - The upper compression ring side clearance should be **0.025 mm - 0.070 mm (0.001 in - 0.0028 in)**
   - The lower compression ring side clearance should be **0.025 mm - 0.070 mm (0.001 in - 0.0028 in)**
   - The oil ring side clearance should be **0.040 mm - 0.120 mm (0.0016 in - 0.0047 in)**
4. If the clearance is greater than the provided specifications, replace the piston rings.
5. If the clearance is still to great, replace the pistons.

Connecting Rod Bearing Clearance (With Micrometer Gauge Internal Measuring Device)

1. Install the connecting bearings and the connecting rod bearing caps.
2. Tighten the connecting rod bearing cap bolts in the following sequence:

Caution: Refer to Fastener Caution in the Preface section.

Note: The old bolts can be reused for the measuring procedure.

2.1. Tighten the connecting rod bearing cap bolts to **10 N·m (89 lb in)**.
2.2. Tighten the bolts to an additional **60°**.
2.3. Tighten the bolts to an additional **15°**.

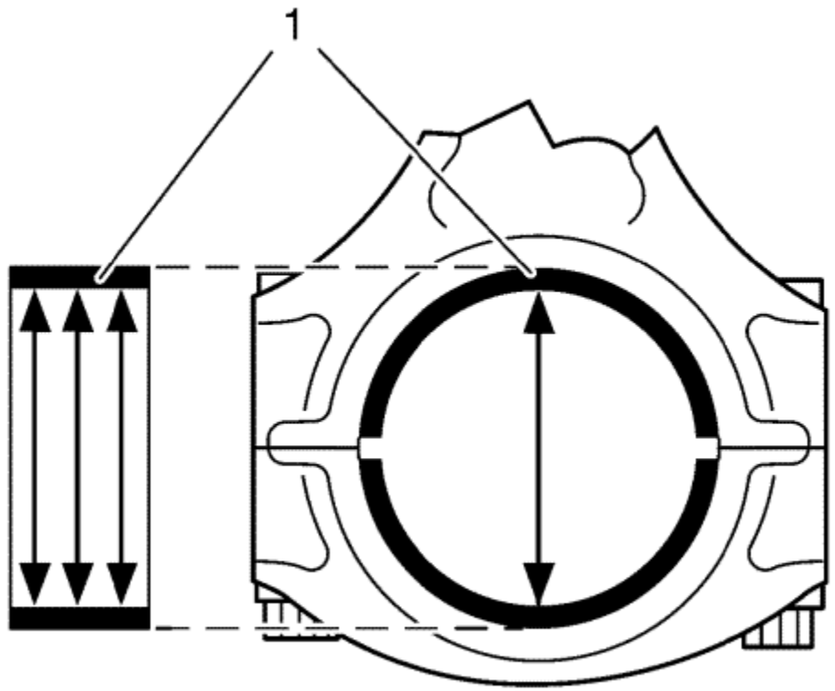

3. Measure the connecting rod bearing diameters at 3 points as shown (1). Use an internal measuring device.
4. Calculate the average connecting rod inner diameter.

   Formula: 1. result + 2. result + 3. result / 3

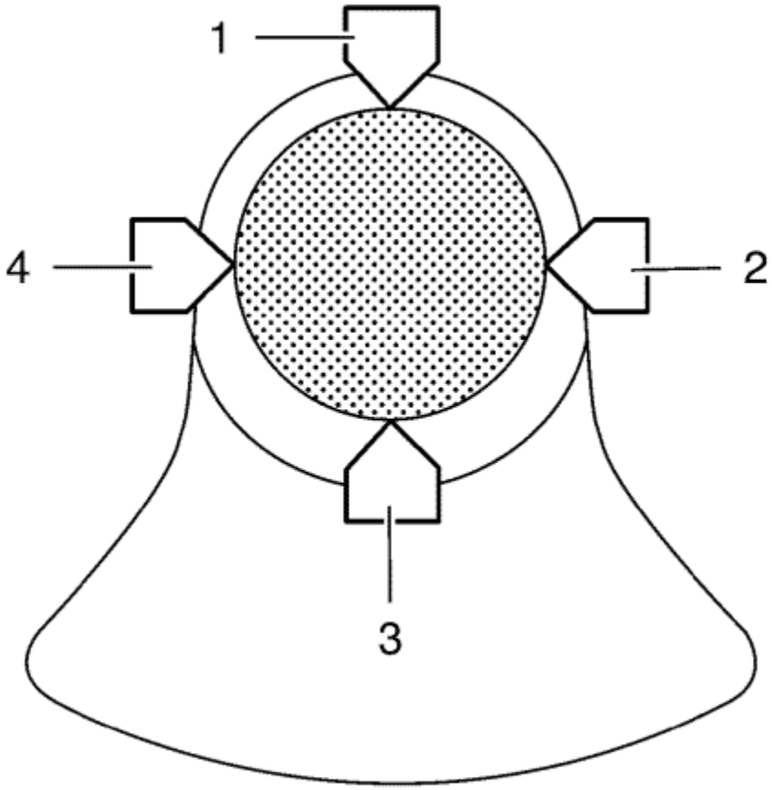

5. Measure the connecting rod journal diameter at 2 points between 1 and 3 and between 2 and 4. Use a micrometer gauge.
6. Calculate the average connecting rod journal diameter.

   Formula: 1. result + 2. result / 2.

7. Subtract the average connecting rod journal diameter from the average connecting rod bearing diameter in order to determine the connecting rod bearing clearance.

   The clearance should be **0.013 mm - 0.061 mm (0.0005 in - 0.0024 in)**

&#169© Copyright Chevrolet. All rights reserved

Piston and Connecting Rod Assemble

In case of damage on piston, piston pin or connecting rod, all components of the piston assembly have to be replaced. The piston pin cannot be removed and reinstalled due to the shrink fit of connecting rod and piston pin. In case of replacement use a suitable, customary assembly tool.

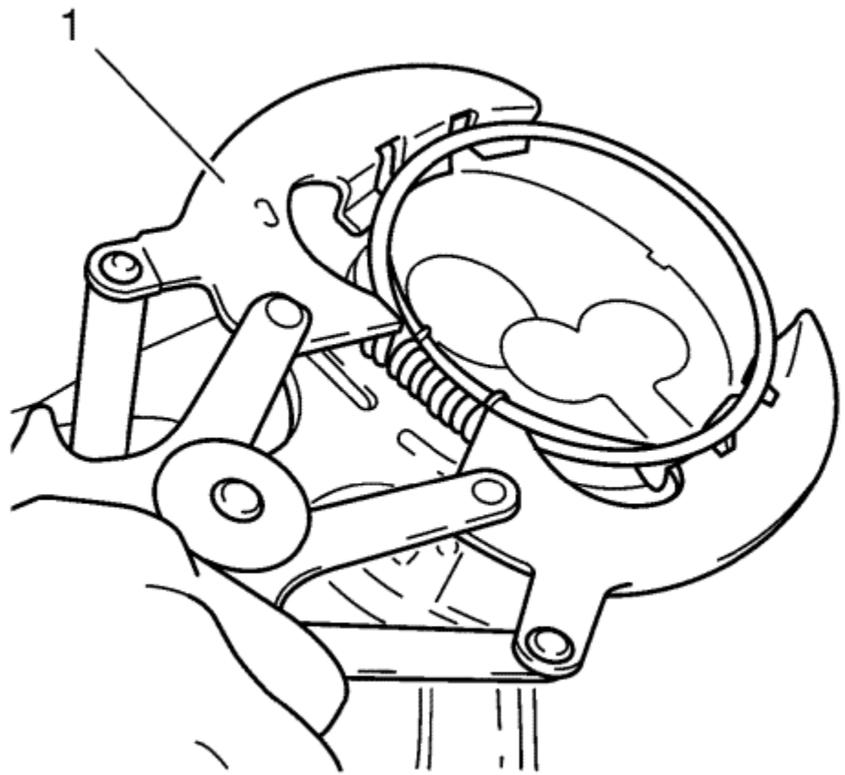

1. Install the piston rings. Use piston ring pliers (1).

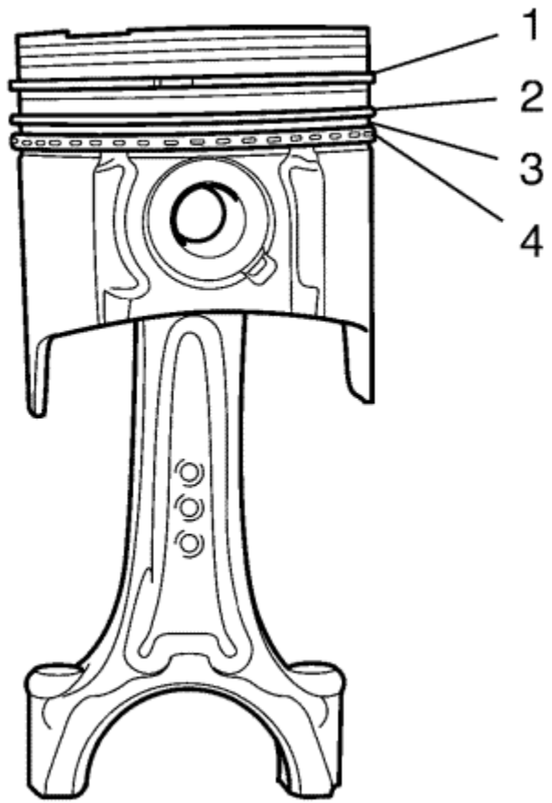

Note: Mind the TOP marking on the piston rings.

2. The piston rings must be ordered as follows:
   - Upper compression ring (1)
   - Lower compression ring (2)
   - Piston oil rings with spacer (3, 4)

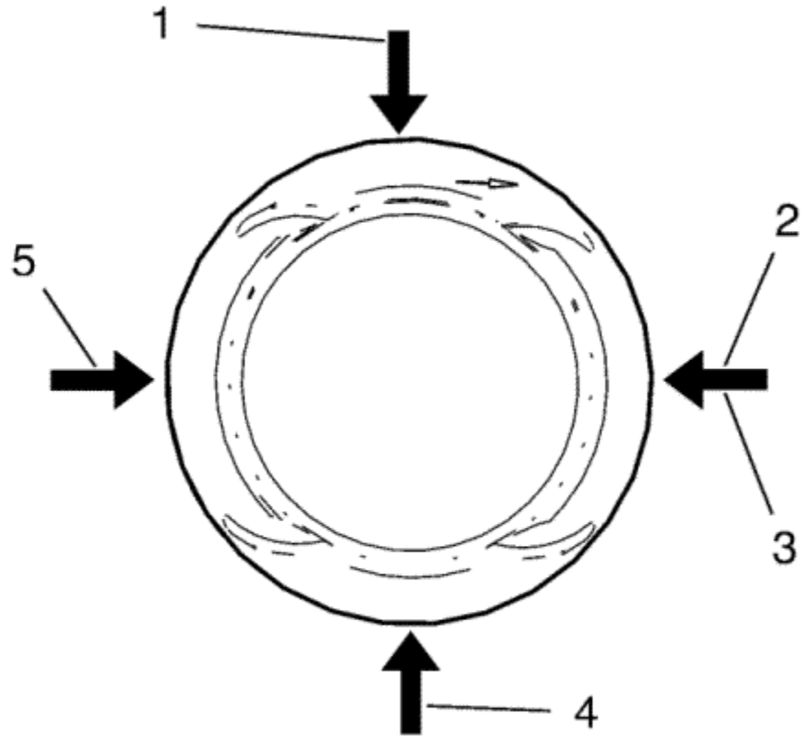

3. The piston ring joints should be displaced as followed:
   - Upper compression ring joint (2)
   - Lower compression ring joint (5)
   - Oil ring joint, upper part (1)
   - Oil ring joint, lower part (4)
   - Oil ring spacer joint (3)

&#169© Copyright Chevrolet. All rights reserved

Inlet Manifold Disassemble

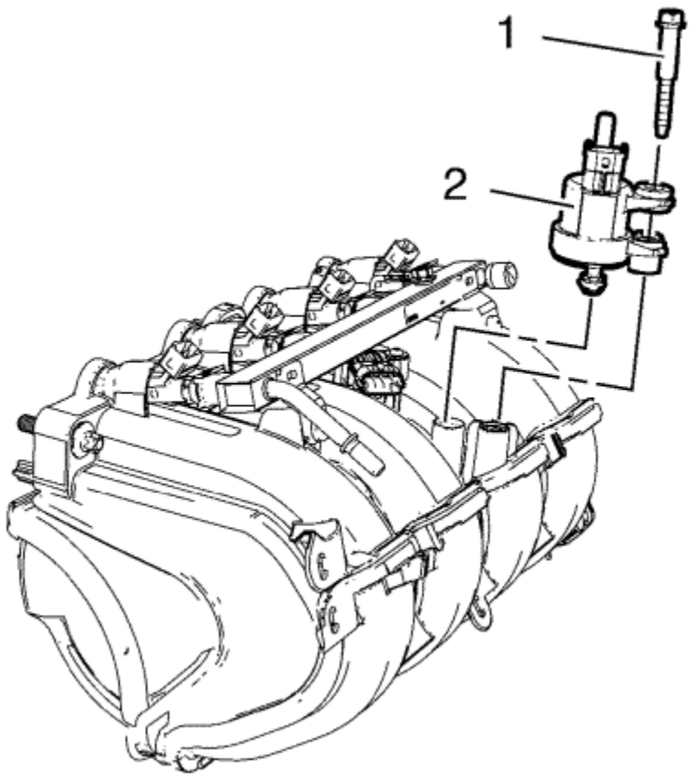

1. Remove the evaporative emission canister purge solenoid valve bolt (1).
2. Remove the evaporative emission canister purge solenoid valve (2) from intake manifold.

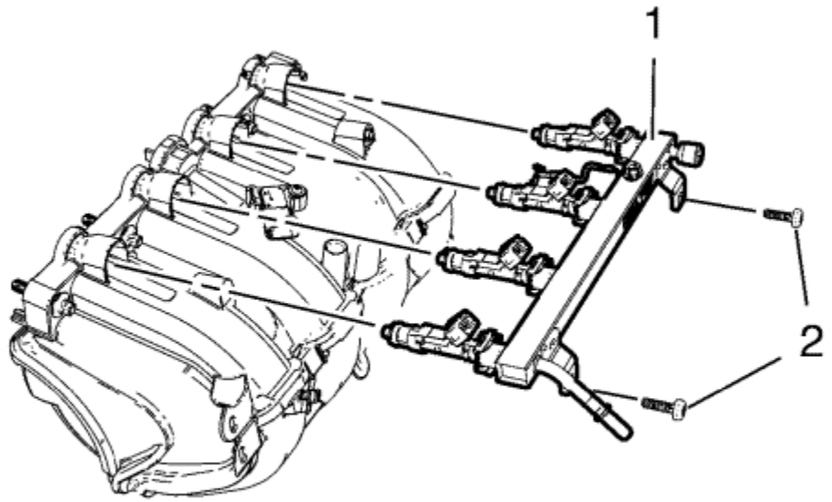

3. Remove the 2 fuel rail bolts (2).
4. Remove the fuel rail (1).

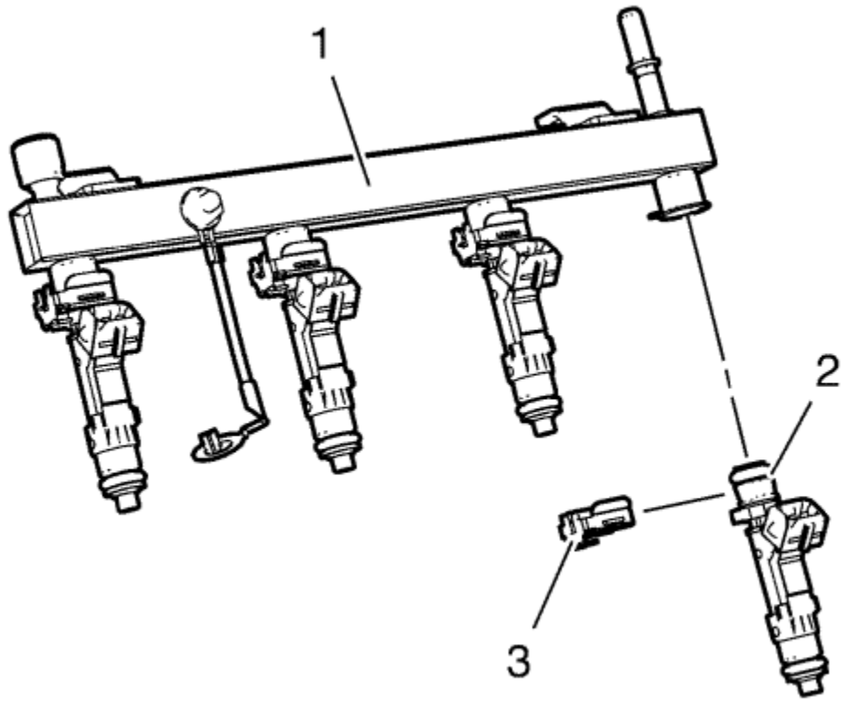

5. Remove the fuel injector retainer clamp (3).
6. Separate the fuel injector (2) from fuel rail (1).

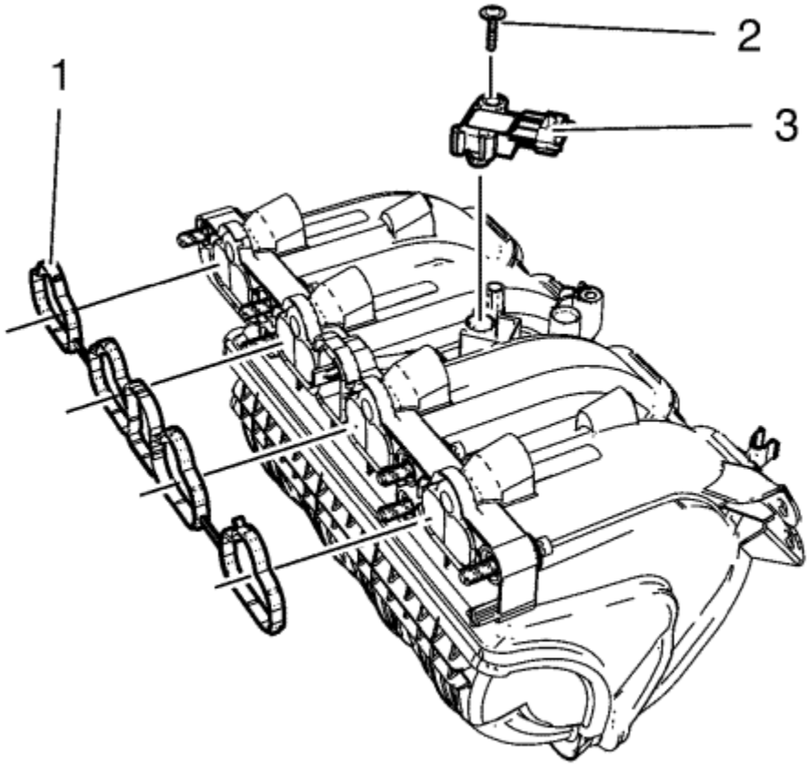

7. Remove the inlet manifold gasket (1).
8. Remove the manifold absolute pressure sensor bolt (2).
9. Remove the manifold absolute pressure sensor (3).

© Copyright Chevrolet. All rights reserved

Inlet Manifold Cleaning and Inspection

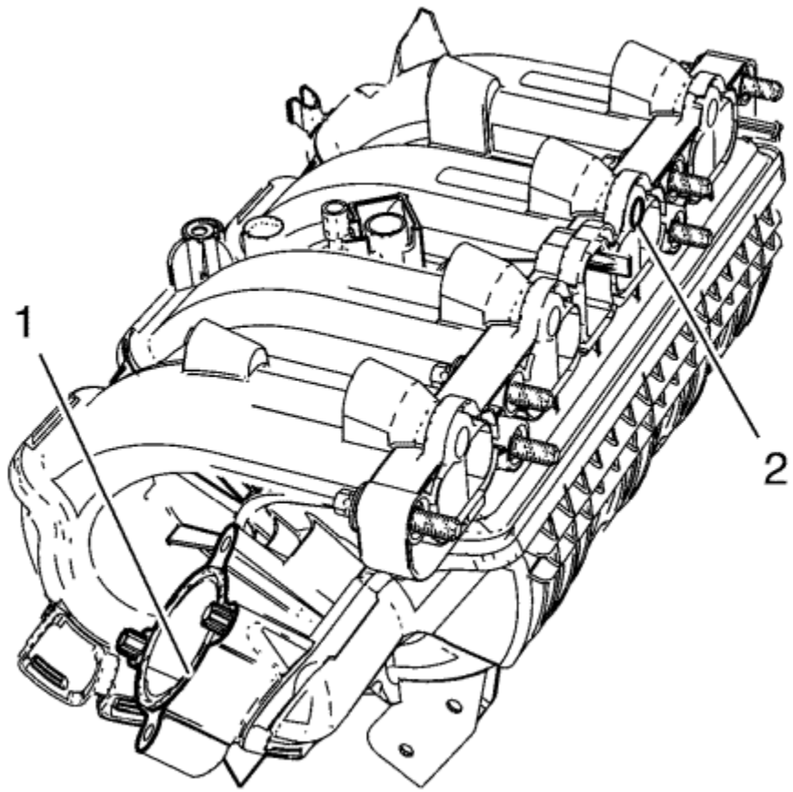

1. Clean the sealing surfaces (1, 2).
2. Inspect the inlet manifold for cracks and fractures.

© Copyright Chevrolet. All rights reserved

Inlet Manifold Assemble

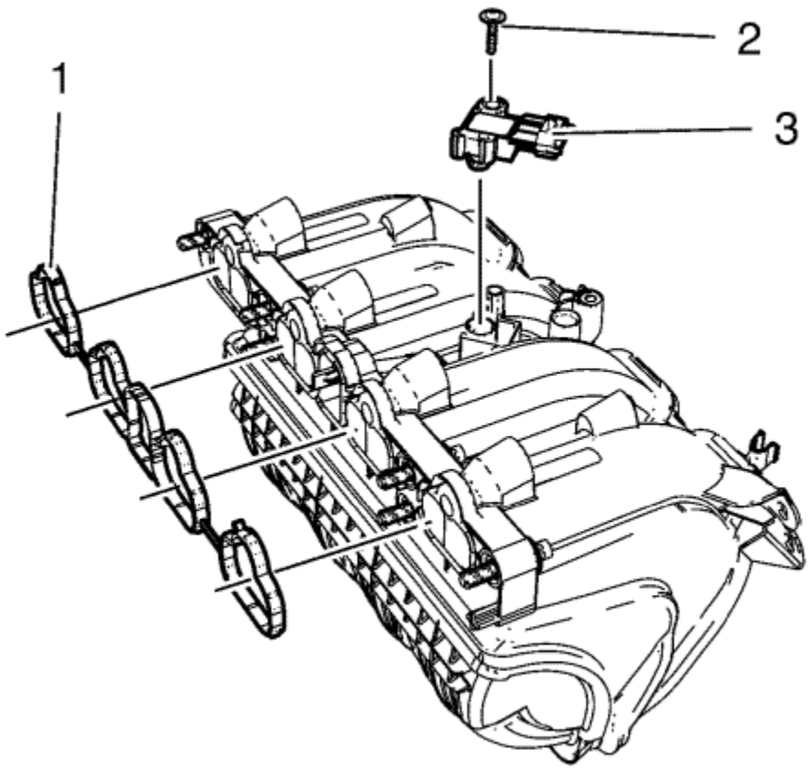

1. Install a NEW inlet manifold gasket (1).
2. Install the manifold absolute pressure sensor (3).
3. Install the manifold absolute pressure sensor bolt (2) and tighten.

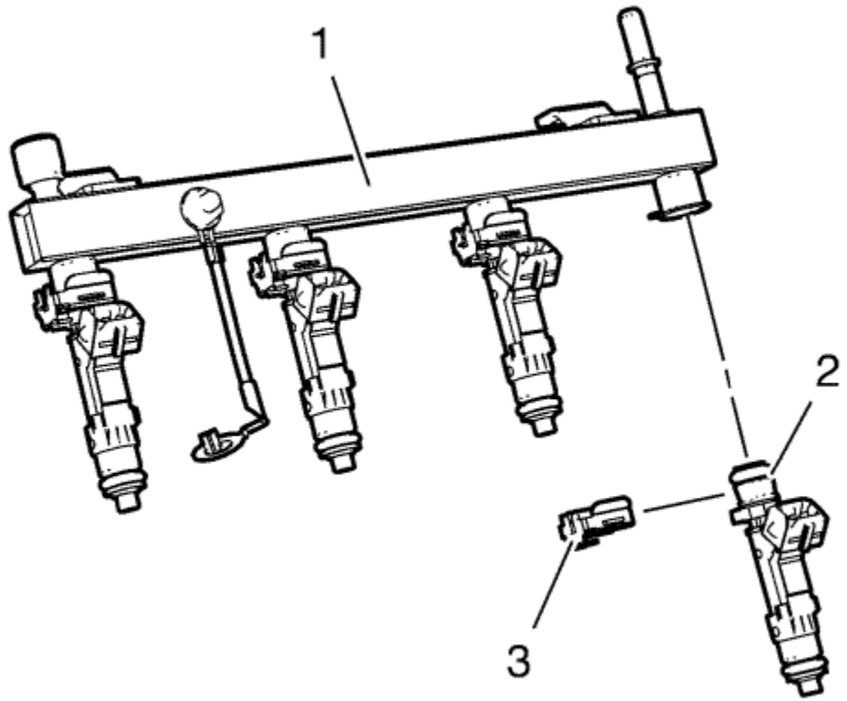

4. Install the fuel injector (2) to fuel rail.
5. Install the fuel injector retainer clamp (3).

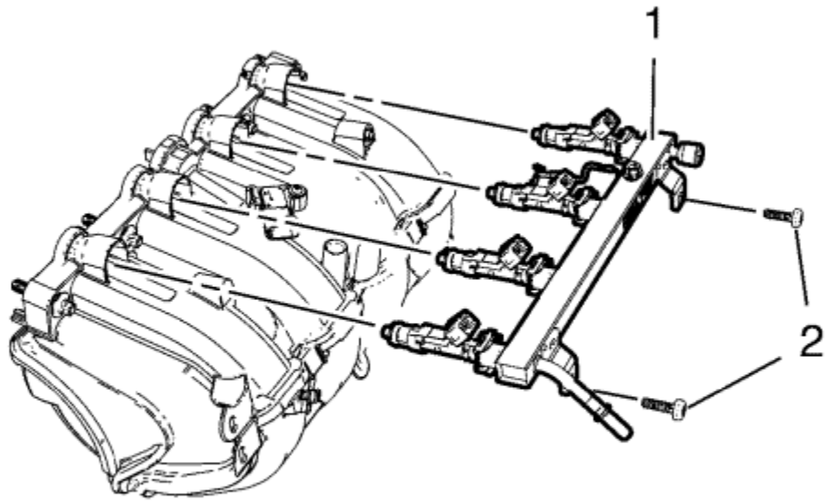

6. Install the fuel rail (1).

   Caution: Refer to Fastener Caution in the Preface section.

7. Install the 2 fuel rail bolts (2) and tighten to **7 N·m (62 lb in)**.

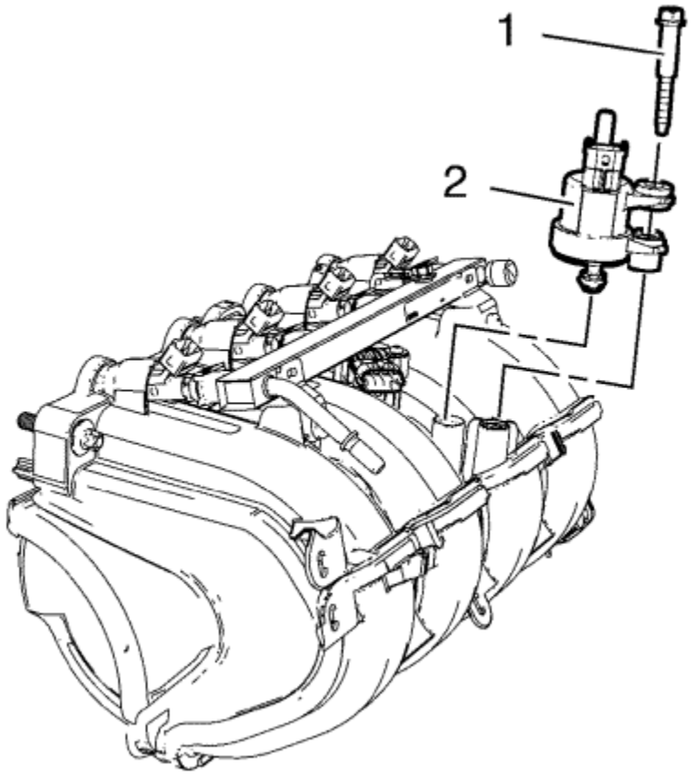

8. Install the evaporative emission canister purge solenoid valve (2) to the inlet manifold.
9. Install the evaporative emission canister purge solenoid valve bolt (1) and tighten.

© Copyright Chevrolet. All rights reserved

Crankshaft and Bearing Cleaning and Inspection

Special Tools

- *EN-470-B* Angular Torque Wrench .
- *GE-571-B* Dial Gauge.

For equivalent regional tools, refer to Special Tools .

Crankshaft End Play, Check

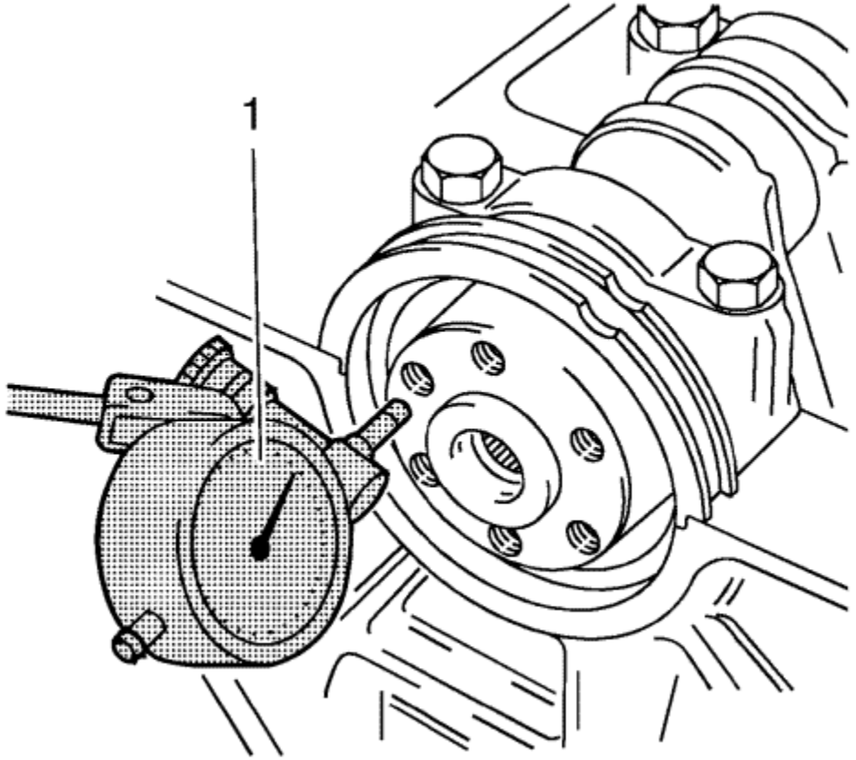

Note : Crankshaft attached with crankshaft bearing caps.

1. Install the *GE-571-B* gauge (1).
   - Install the holder on the front of the engine block.
   - Place the dial gauge plunger against the crankshaft and adjust.
2. Measure the longitudinal play of the crankshaft.
   - Move the crankshaft in the longitudinal direction.
   - Permissible crankshaft end play **0.100-0.202 mm (0.0039-0.0080 in)**.
3. Remove the *GE-571-B* gauge.

Crankshaft Out-of-Round, Check

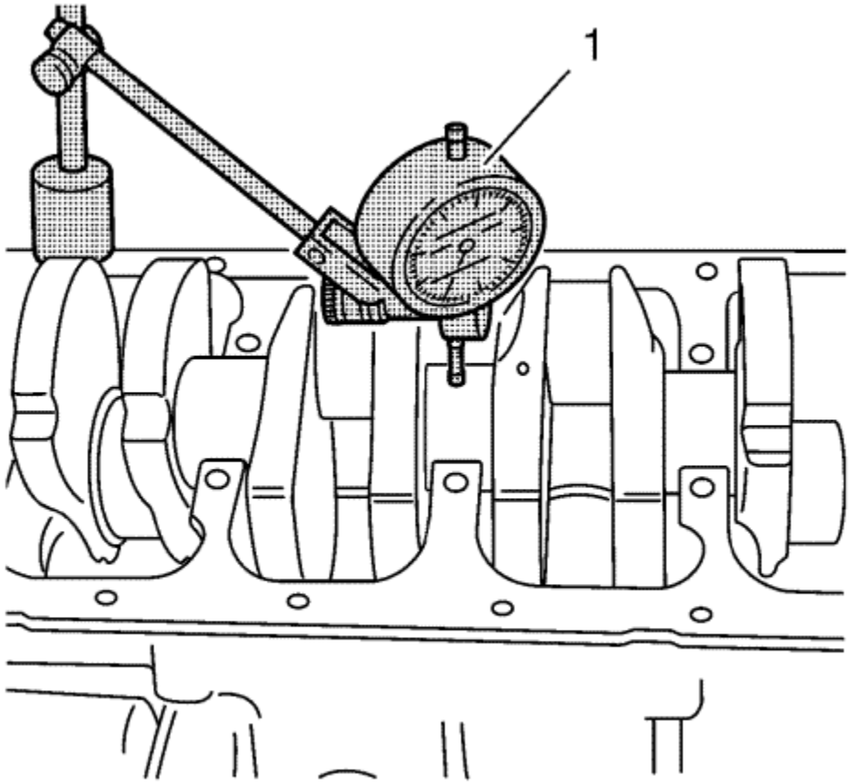

Note: Crankshaft removed.

1. Insert the crankshaft in the engine block.
2. Install the *GE-571-B* gauge (1).
   - Attach holder to the engine block.
   - Place the dial gauge plunger against the crankshaft bearing journal and adjust.
3. Check the rotational play of the crankshaft.
   - Turn the crankshaft evenly.
   - Maximum permissible rotational play **0.03 mm (0.001 in)**.
4. Remove the *GE-571-B* gauge.

Check Crankshaft Bearing Clearance (With Plastigage)

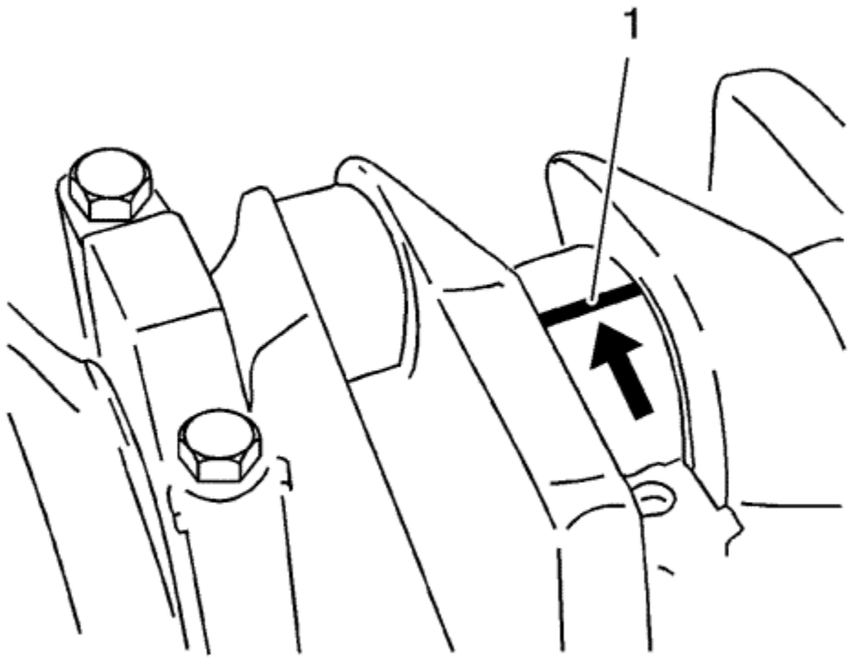

Note:

- Crankshaft removed.
- Do not rotate the crankshaft.

1. Lay out plastigauge. Refer to electronic parts catalog to find the recommended plastigage.

   Lay out plastigauge (flexible plastic thread) around the entire width of the crankshaft bearing journal (1).

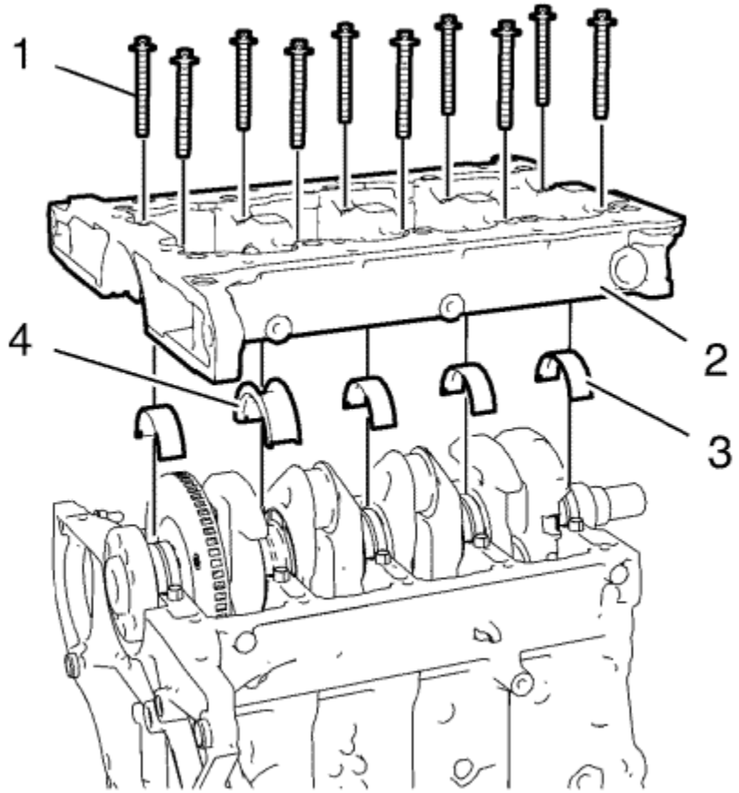

Note: The bolts can be reused for checking the crankshaft bearing play.

2. Install the 4 lower crankshaft bearings (3) and the lower crankshaft thrust bearing (4).
3. Install the crankshaft bearing cap tie plate (2).
4. Install the 10 inner crankshaft bearing cap tie plate bolts (1).

Caution: Refer to Fastener Caution in the Preface section.

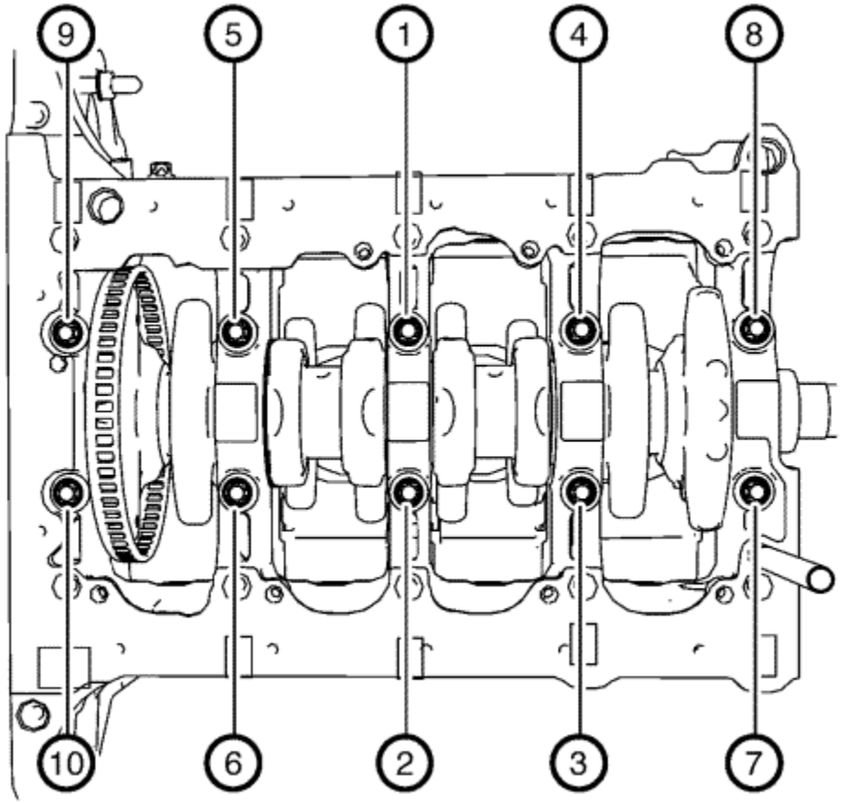

5. Tighten the 10 inner crankshaft bearing cap tie plate bolts in a sequence as shown and in the following order:
   5.1. Tighten the inner crankshaft bearing cap tie plate bolts to **25 N·m (18 lb ft)**.
   5.2. Tighten the inner crankshaft bearing cap tie plate bolts an additional **60°**. Use *EN-470-B* wrench .
   5.3. Tighten the inner crankshaft bearing cap tie plate bolts an additional **15°**. Use *EN-470-B* wrench .
6. Remove the crankshaft bearing cap tie plate bolts and the crankshaft bearing cap tie plate.

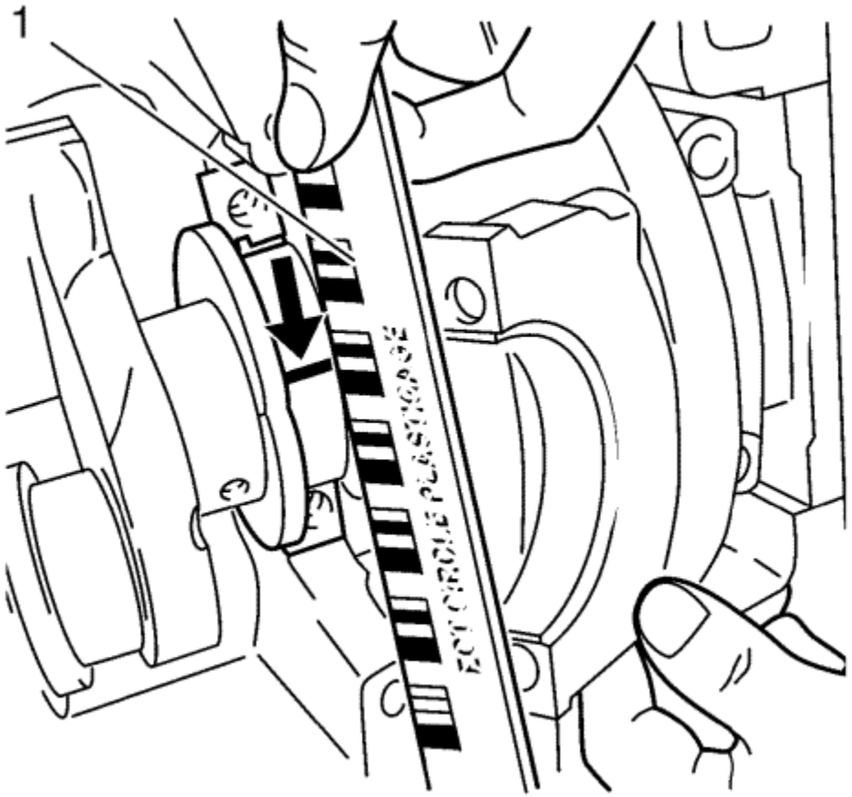

Note: When reading the value, do not confuse millimetres and inches on the measuring scale.

7. Measure the crankshaft bearing play.
   - Compare the width of the flattened plastic thread (arrow) to the measuring scale (1).
   - The crankshaft bearing play should be **0.007-0.031 mm (0.00028-0.00122 in)**.

Check Crankshaft Bearing Clearance (With Micrometer Gauge Internal Measuring Device)

Note: The bolts can be reused for checking the crankshaft bearing play.

1. Install and tighten the crankshaft bearing cap tie plate and the crankshaft bearings as shown above.

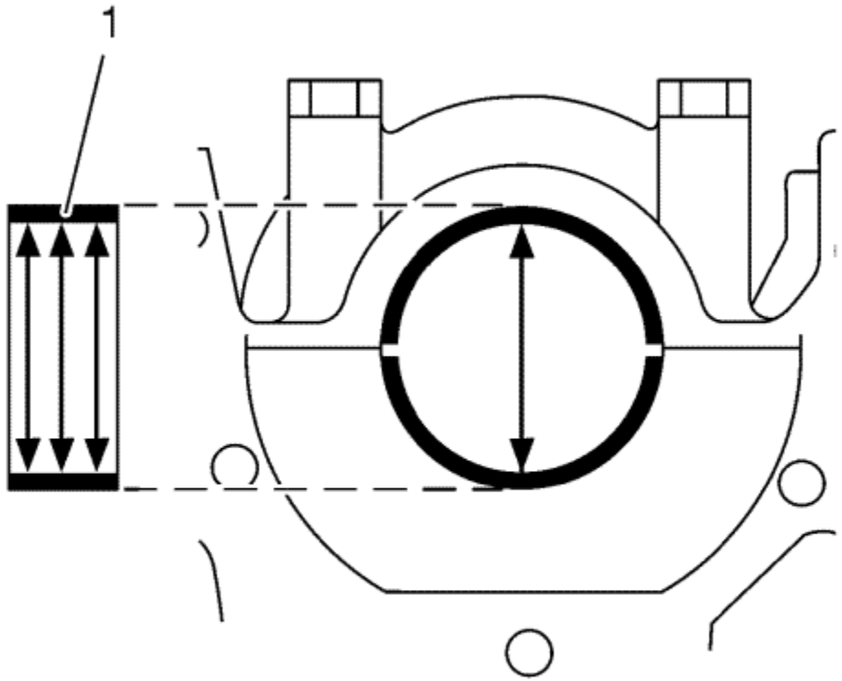

2. Measure the crankshaft bearing diameter at 3 points.

   Measure in areas as shown (1) with an internal measuring device.

   Calculate the average crankshaft bearing diameter.

   Formula: 1. result + 2. result + 3. result / 3.

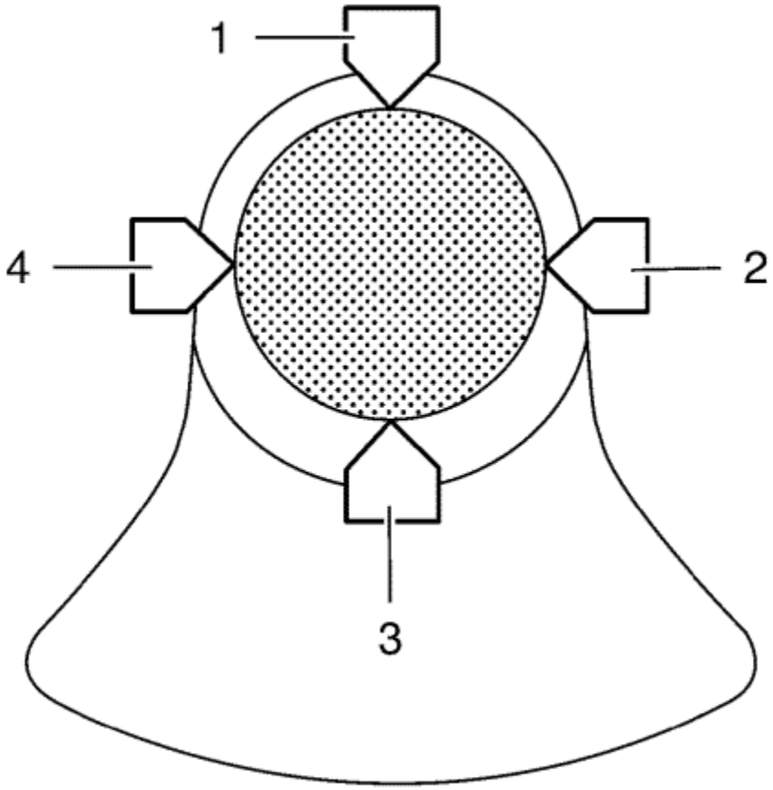

3. Measure the crankshaft bearing journal diameter at 2 points between (1) and (3) and between (2) and (4) with the micrometer gauge.
4. Calculate the average crankshaft bearing journal diameter.

   Formula: 1. result + 2. result / 2.

5. Determine the crankshaft bearing play.

   Calculation formula: average crankshaft bearing diameter minus average crankshaft bearing journal diameter.

6. The crankshaft bearing play should be **0.007-0.031 mm (0.00028-0.00122 in)**.

&#169© Copyright Chevrolet. All rights reserved

Engine Front Cover and Oil Pump Cleaning and Inspection

Engine Front Cover Cleaning Procedure

1. Clean the engine front cover sealing surface.

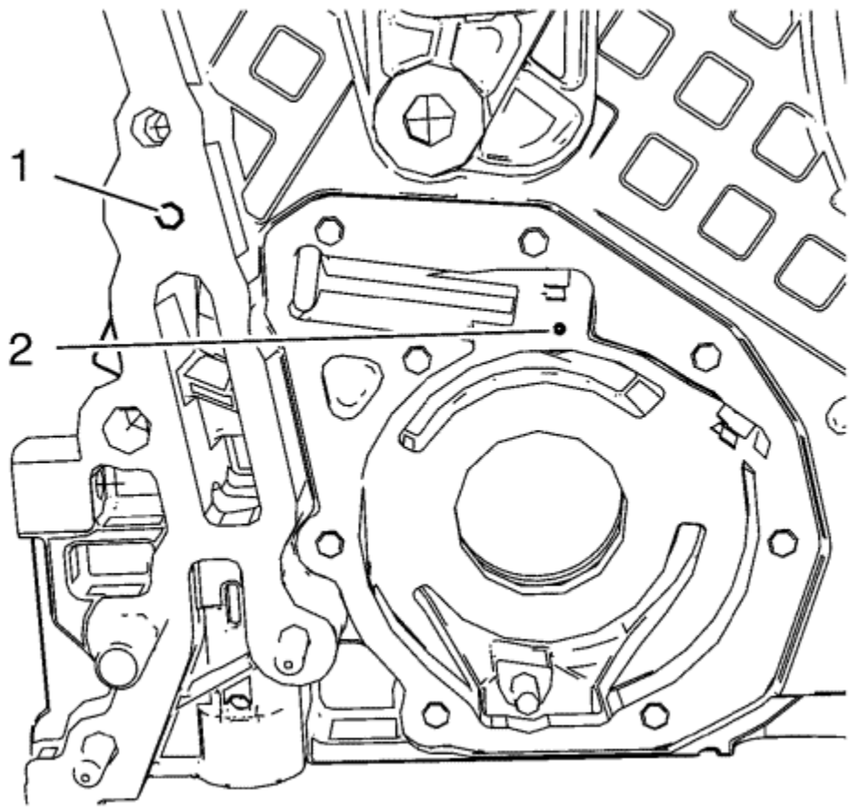

Warning: Wear safety glasses when using compressed air in order to prevent eye injury.

Caution: To ensure proper engine lubrication, clean clogged or contaminated oil galleries in an approved solvent and with compressed air. Failure to clean oil galleries

may cause engine damage.

2. Clean the shown oil gallery with solvent and compressed air. Blow compressed air from bore (2) to bore (1).

Engine Front Cover Visual Inspection

Inspect the engine front cover for cracks, scratches and damage.

Oil Pump Visual Inspection and Measurement

1. Inspect the oil pump cover and the engine front cover for flatness.
2. Inspect the oil pump vanes, the oil pump vane rotor, the oil pump vane rings and the oil pump slide for localised flatting.
3. Inspect the oil pump slide pivot pin for firm seat.

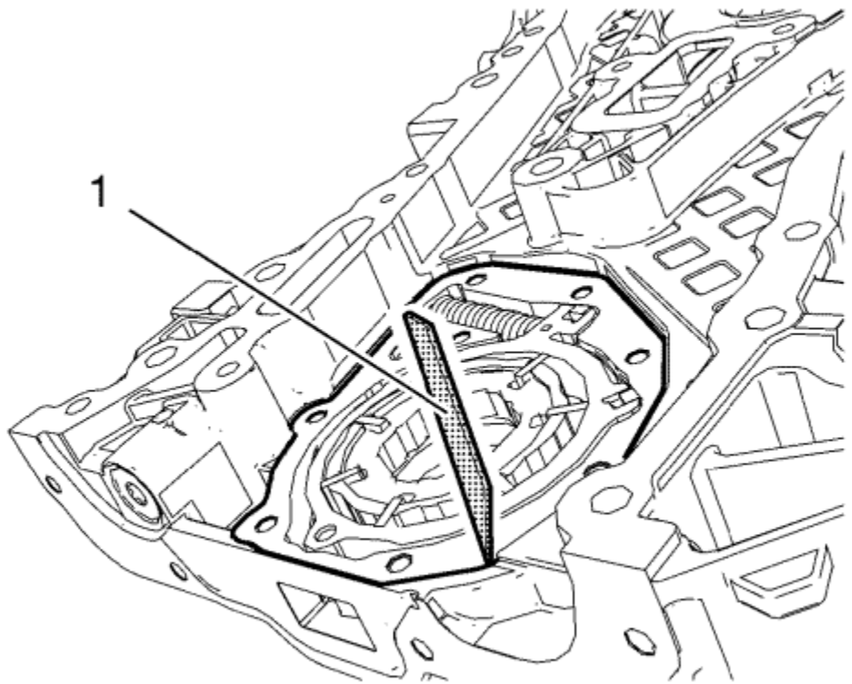

Note: Oil pump components are installed.

4. Measure the oil pump axial clearances. Use a straight edge (1) and a feeler gauge.
   4.1. The maximal axial clearance between engine front cover and oil pump vane rotor should be **0.1 mm (0.004 in)**.
   4.2. The maximum axial clearance between engine front cover and oil pump vane should be **0.09 mm (0.0035 in)**.
   4.3. The maximum axial clearance between engine front cover and oil pump vane ring should be **0.4 mm (0.016 in)**.
   4.4. The maximum axial clearance between engine front cover and oil pump slide should be **0.08 mm (0.0031 in)**.
   4.5. The maximum axial clearance between engine front cover and oil pump slide seal should be **0.09 mm (0.0035 in)**.

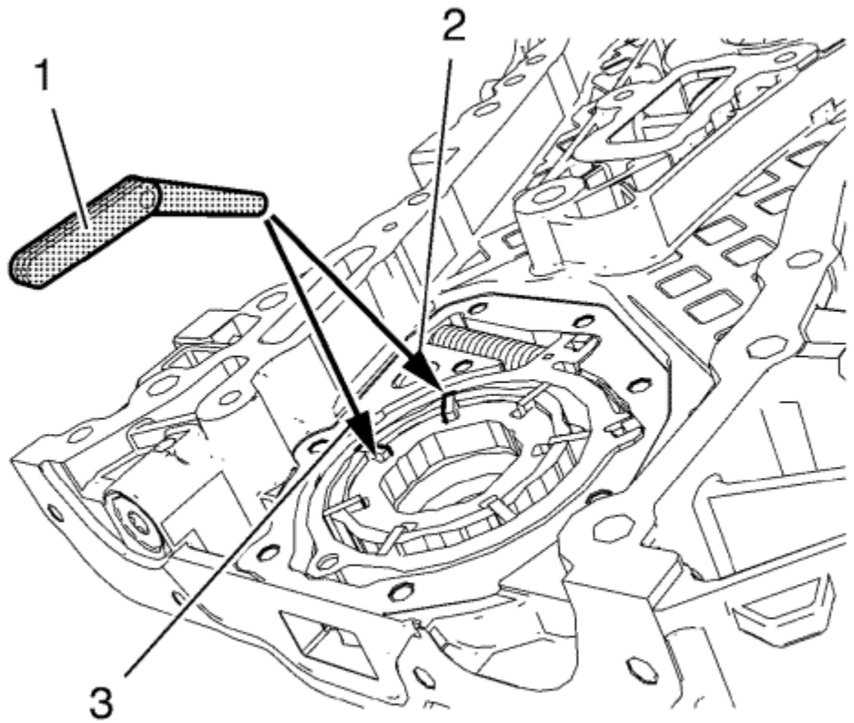

5. Measure the oil pump radial clearance. Use a feeler gauge (1). Measure the clearance between oil pump vane rotor and oil pump vane (3).

   The maximum clearance should be **0.05 mm (0.002 in)**.

6. Measure the clearance between oil pump vane and oil pump slide (2).

   The maximum clearance should be **0.2 mm (0.008 in)**.

© Copyright Chevrolet. All rights reserved

Engine Front Cover and Oil Pump Disassemble

Engine Front Cover Disassemble

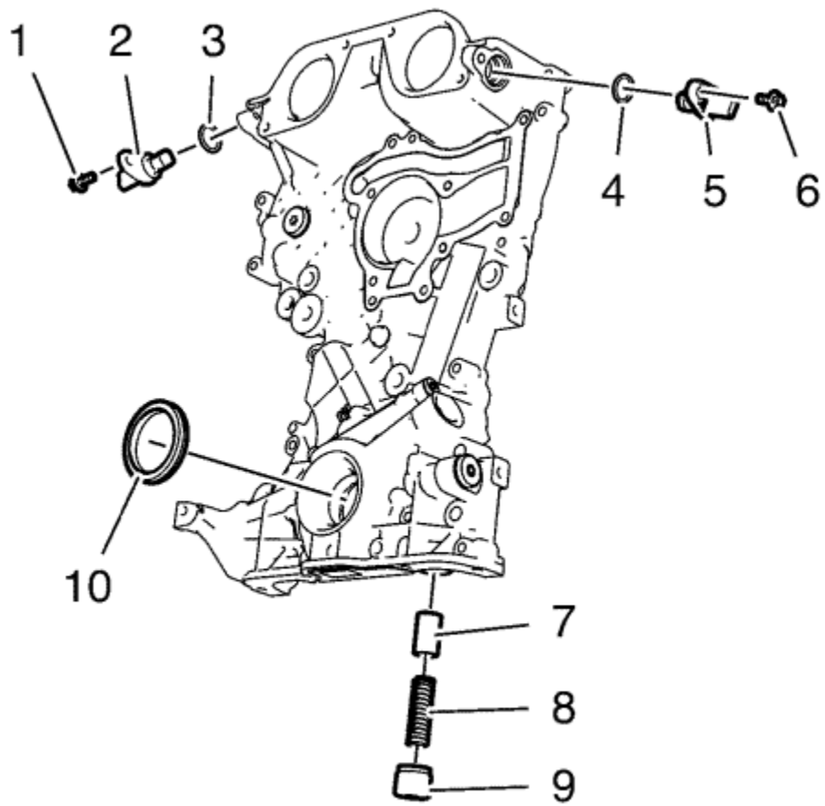

1. Remove the intake camshaft position sensor bolt (1).
2. Remove the intake camshaft position sensor (2) and the seal ring (3).
3. Remove the exhaust camshaft position sensor bolt (6).
4. Remove the exhaust camshaft position sensor (5) and the seal ring (4).

5. Remove the oil pressure relief valve (7, 8 and 9)
6. Remove the crankshaft front oil seal (10).

Oil Pump Removal

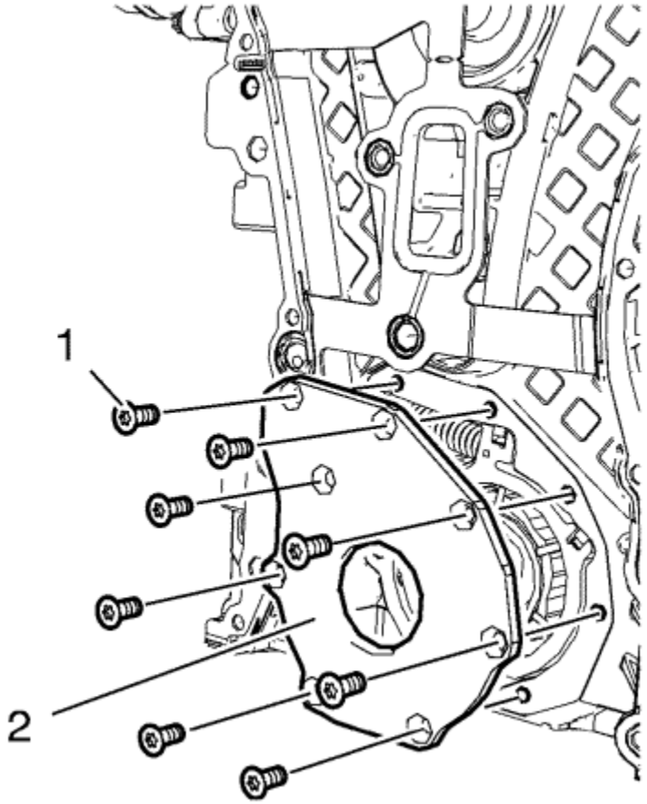

1. Remove the 8 oil pump cover bolts (1).
2. Remove the oil pump cover (2).

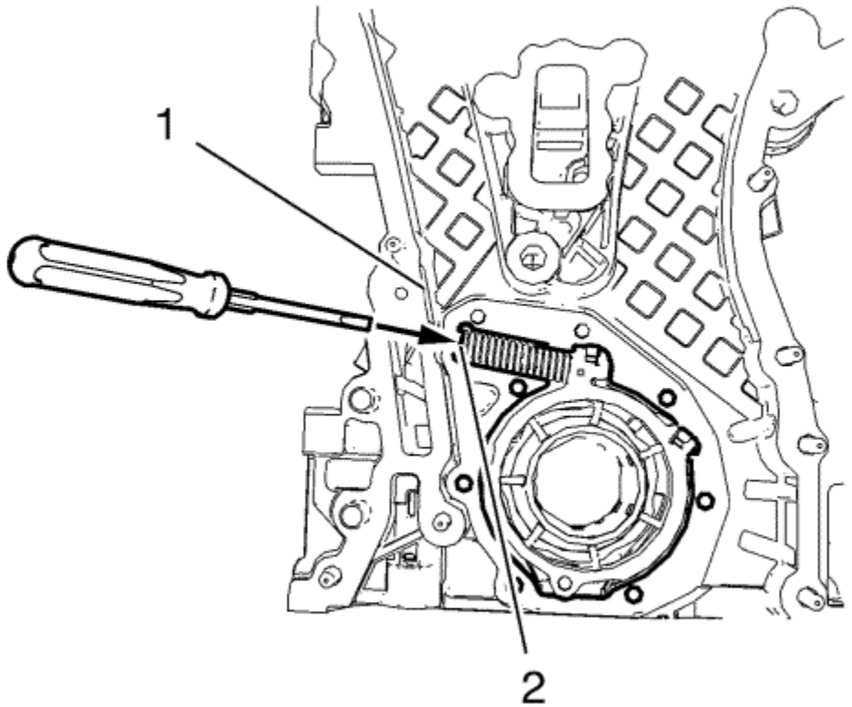

Warning: Before removing the spring, cover the spring with a towel to prevent the spring from flying and possibly causing damage or personal injury.

Note: Position a screw driver between the oil pump slide spring windings (2).

3. Protect the engine front cover edge (1) with a suitable piece of plastic.
4. Compress the oil pump slide spring with a screw driver and remove the oil pump slide spring along with the oil pump slide spring pin.

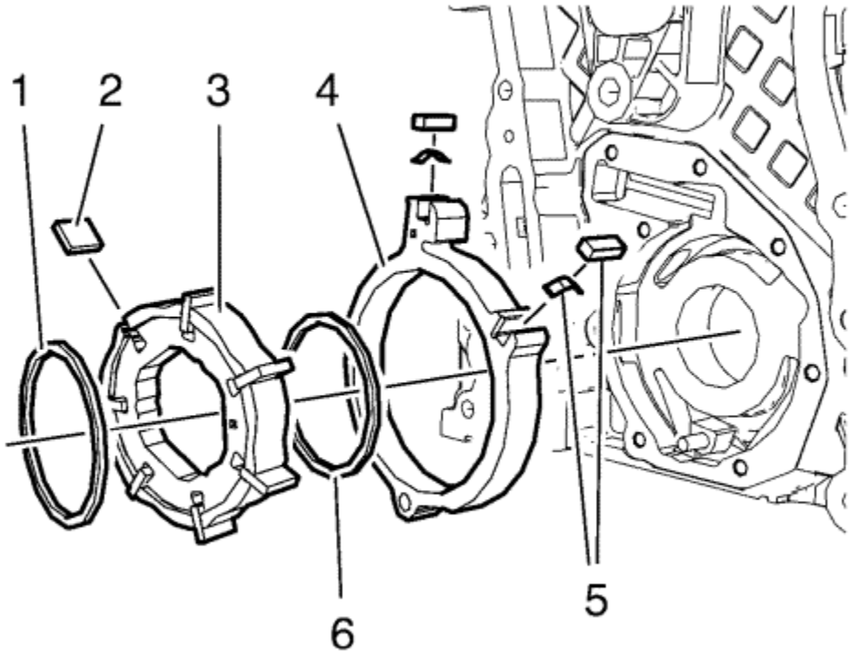

Note: Mind the installation position of the oil pump components.

5. Remove the oil pump components in the following order:
   5.1. Outer oil pump vane ring (1).
   5.2. Oil pump vane rotor (3) and the 7 oil pump vanes (2).
   5.3. Inner oil pump vane ring (6).
   5.4. Oil pump slide (4) and the 2 oil pump slide seals with the 2 oil pump slide seal springs (5).

© Copyright Chevrolet. All rights reserved

Sump Cleaning and Inspection

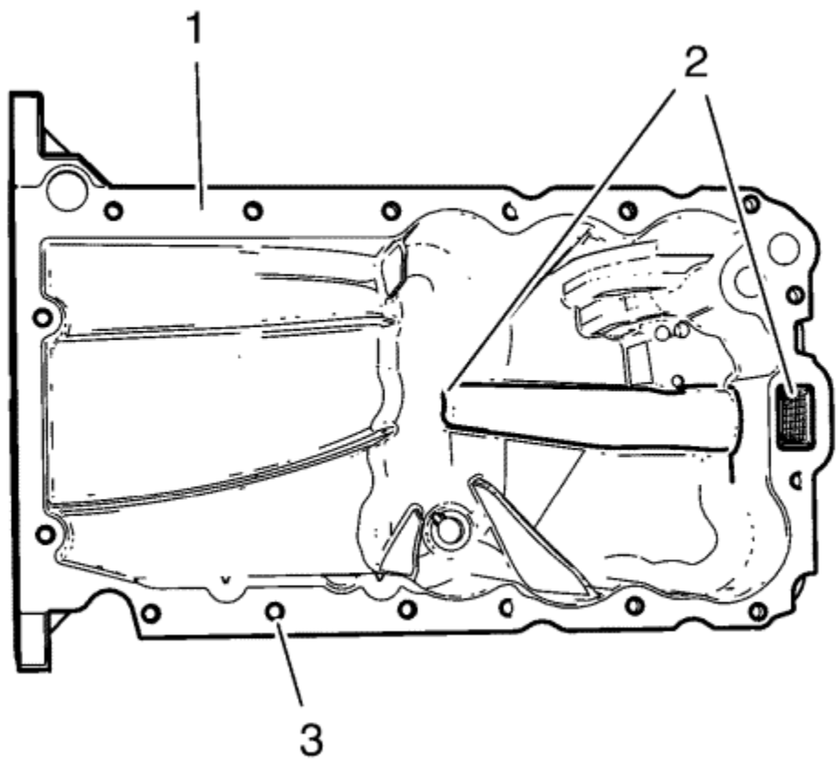

Warning: Wear safety glasses when using compressed air in order to prevent eye injury.

Caution: To ensure proper engine lubrication, clean clogged or contaminated oil galleries in an approved solvent and with compressed air. Failure to clean oil galleries may cause engine damage.

1. Clean the oil suction gallery (2) with compressed air. Ensure that there are no remains of dirt or old gasket material.

2. Remove all remains of old gasket material from sealing surface (1) and screw bores (3).
3. Clean the sealing surfaces from dirt and grease.
4. Inspect the sealing surface for cracks and damage.

© Copyright Chevrolet. All rights reserved

Crankshaft and Bearing Installation

Special Tools

- *EN-470-B* Angular Torque Wrench .
- *EN-658-1* Installer from *EN-658* Kit.
- *EN-235-6* Installer from *EN-235-D* Kit.

For equivalent regional tools, refer to Special Tools .

1. Lubricate crankshaft, crankshaft bearings and crankshaft bearing cap tie plate with engine oil.

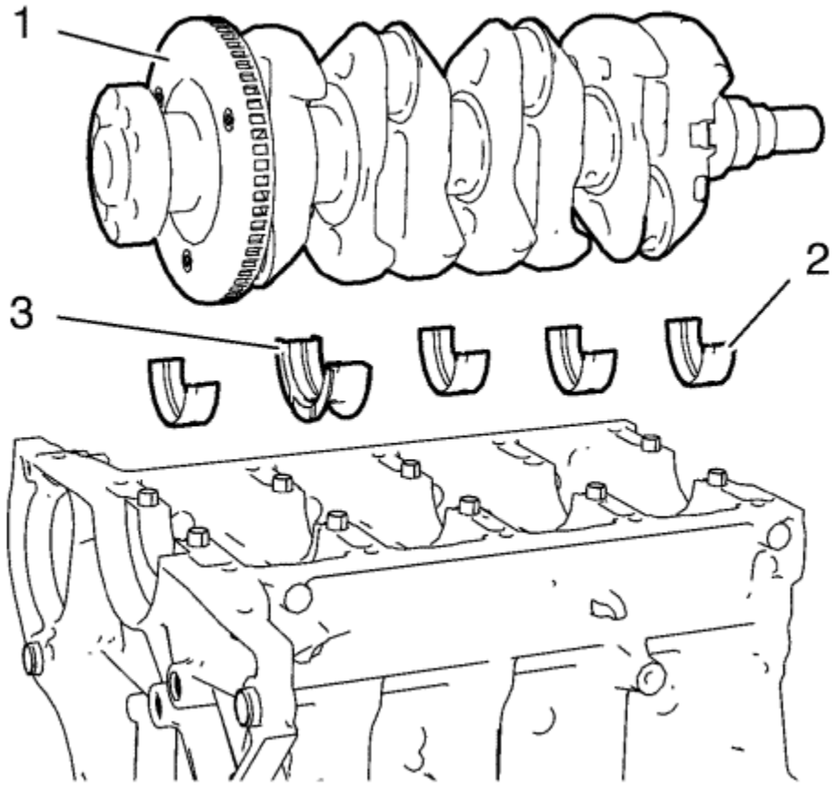

2. Install the 4 upper crankshaft bearings (2) and the crankshaft thrust bearing (3).
3. Install the crankshaft (1).

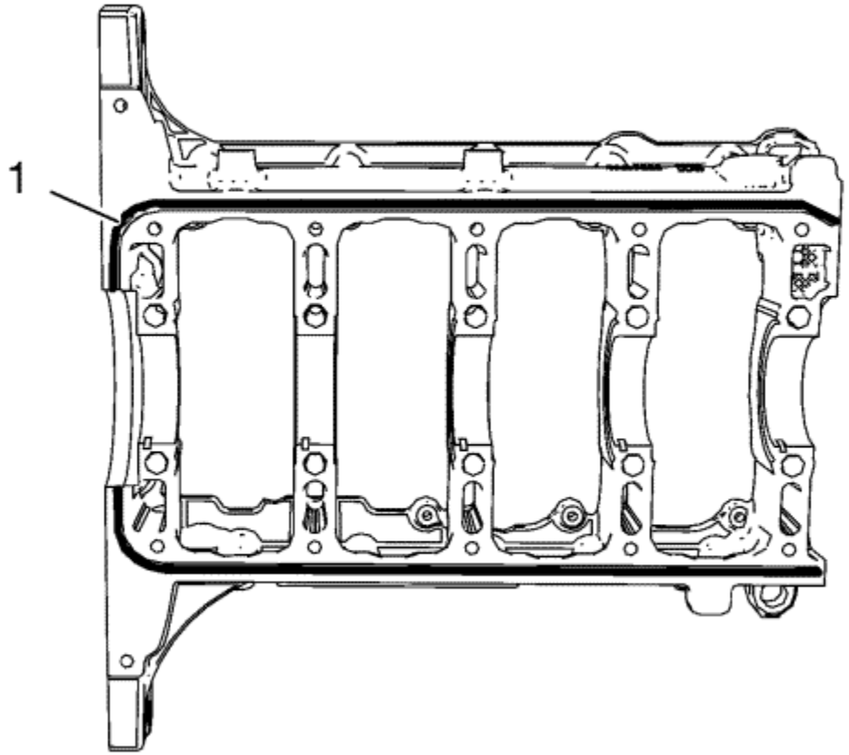

Note: Refer to the electronic parts catalogue to find a suitable sealing compound.

4. Apply sealing compound (1) to the outer rim of the groove on the crankshaft bearing cap tie plate. The thickness of the sealing bead should be **2 mm (0.0787 in)**.

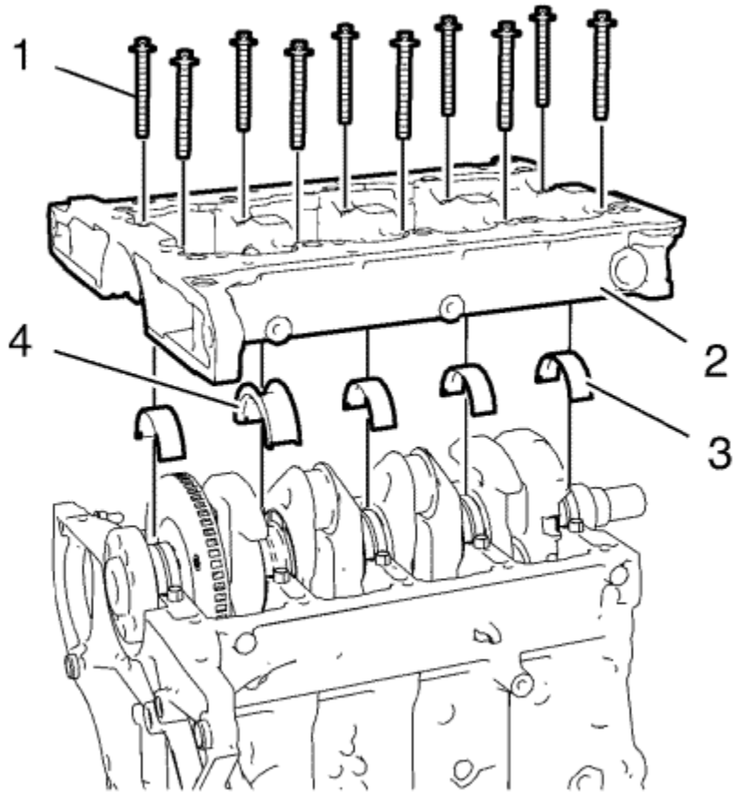

Note: The complete installation procedure should be done in 10 minutes.

5. Install the 4 lower crankshaft bearings (3) and the lower crankshaft thrust bearing (4).
6. Install the crankshaft bearing cap tie plate (2).

Note: Do not reuse the old bolts.

7. Install the 10 inner crankshaft bearing cap tie plate bolts (1).

Caution: Refer to Fastener Caution in the Preface section.

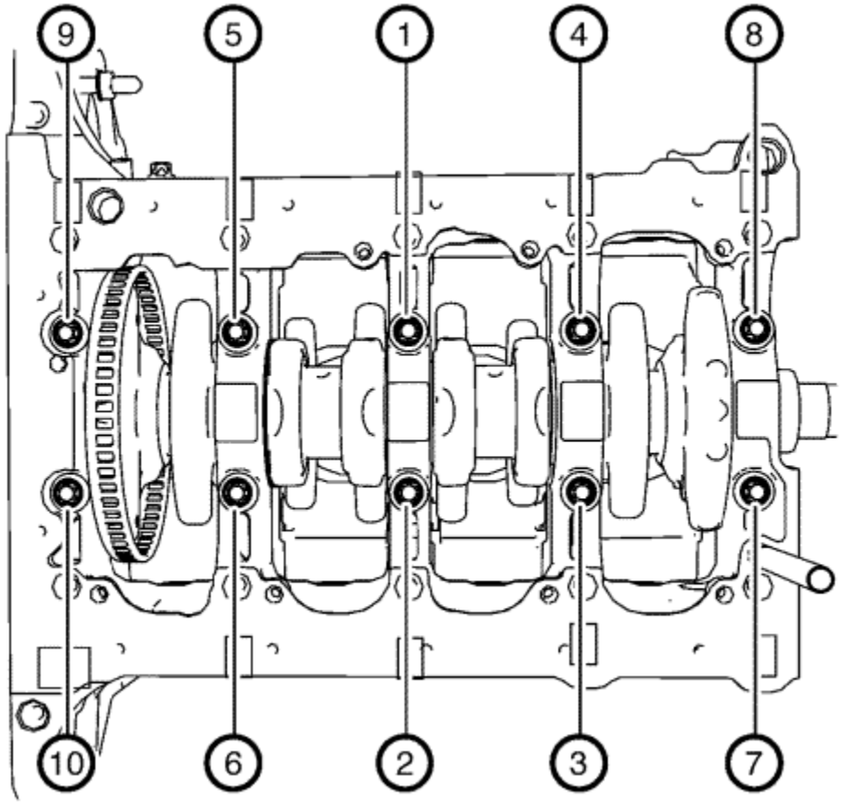

8. Tighten the 10 NEW inner crankshaft bearing cap tie plate bolts in a sequence as shown and in the following order:
   8.1. Tighten the inner crankshaft bearing cap tie plate bolts to **25 N·m (18 lb ft)**.
   8.2. Tighten the inner crankshaft bearing cap tie plate bolts an additional **60°**. Use *EN-470-B* wrench .
   8.3. Tighten the inner crankshaft bearing cap tie plate bolts an additional **15°**. Use *EN-470-B* wrench .

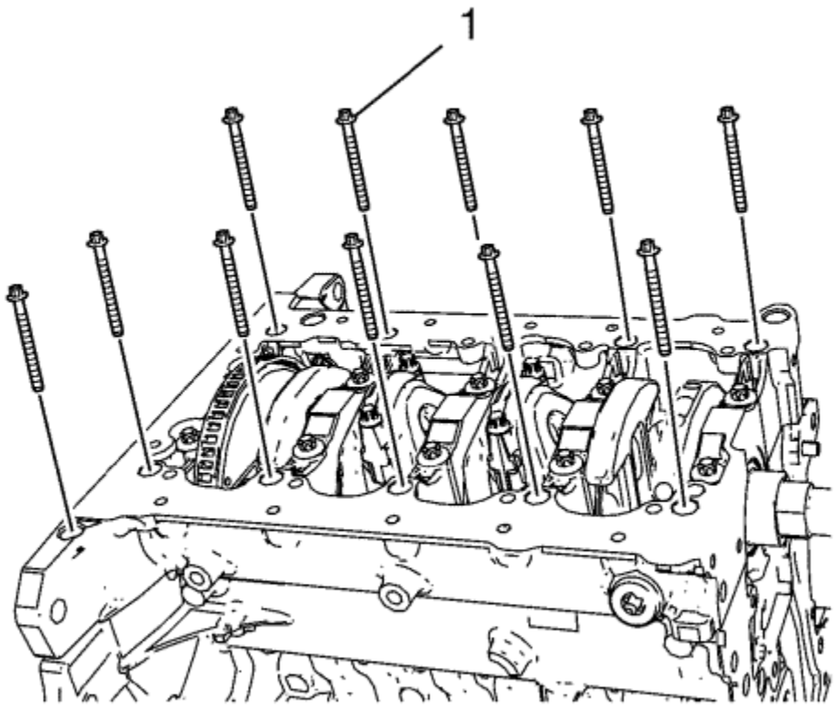

Note: Do not reuse the old bolts.

9. Install the 12 NEW outer crankshaft bearing cap tie plate bolts (1) and tighten in the following order:
   9.1. Tighten the outer crankshaft bearing cap tie plate bolts to **10 N·m (89 lb in)**.
   9.2. Tighten the outer crankshaft bearing cap tie plate bolts an additional **60°**. Use *EN-470-B* wrench .
   9.3. Tighten the outer crankshaft bearing cap tie plate bolts an additional **15°**. Use *EN-470-B* wrench .

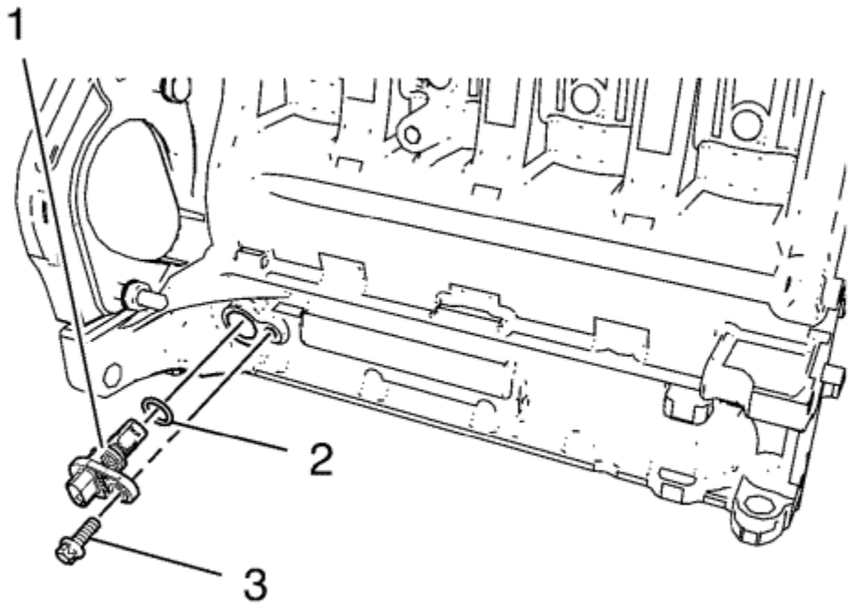

10. Install the crankshaft position sensor (1) and a NEW crankshaft position sensor seal ring (2).
11. Install the crankshaft position sensor bolt (3) and tighten to **8 N·m (71 lb in)**.

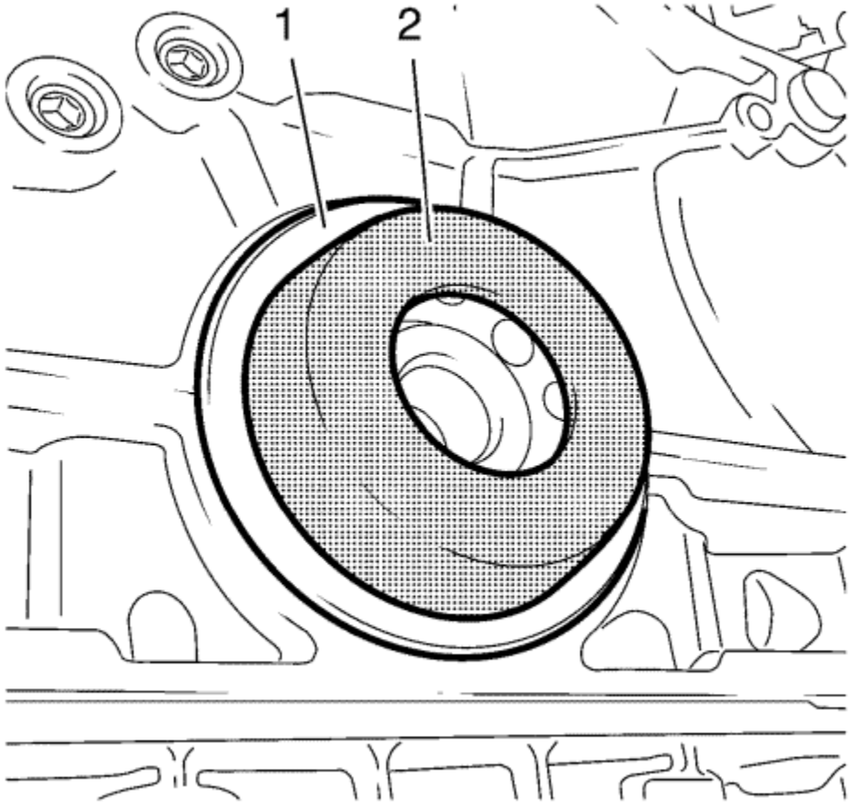

Note: Lubricate the crankshaft rear oil seal.

12. Install the crankshaft rear oil seal (1) with *EN-235-6* installer (2).

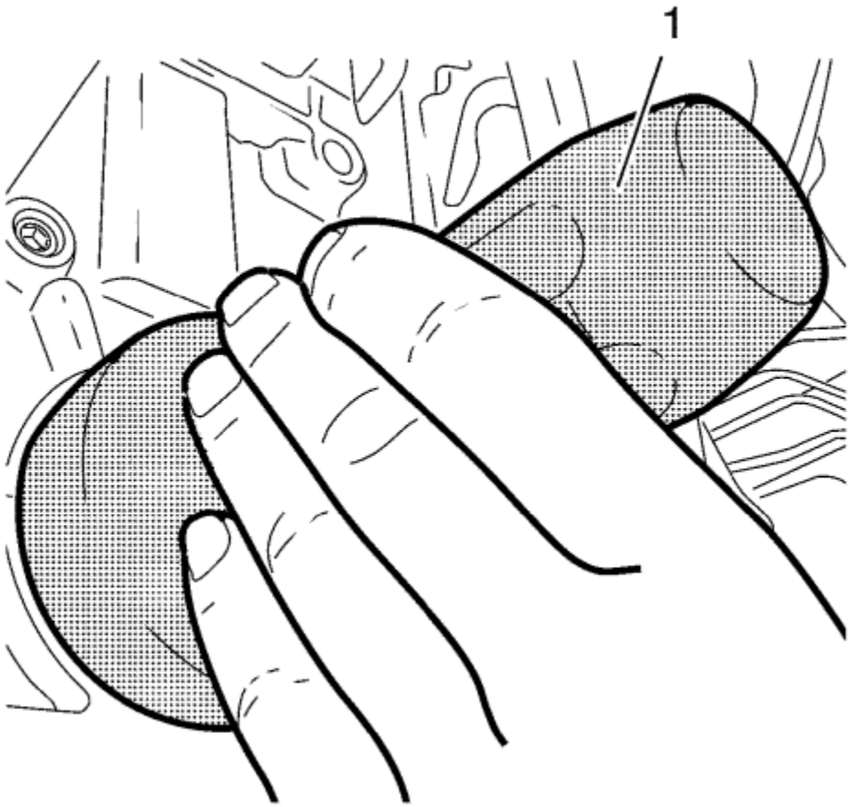

13. Use *EN-658-1* installer (1) to strike the crankshaft rear oil seal.

&#169© Copyright Chevrolet. All rights reserved

Piston, Connecting Rod, and Bearing Installation

Special Tools

EN-470-B Angular Torque Wrench .

For equivalent regional tools, refer to Special Tools .

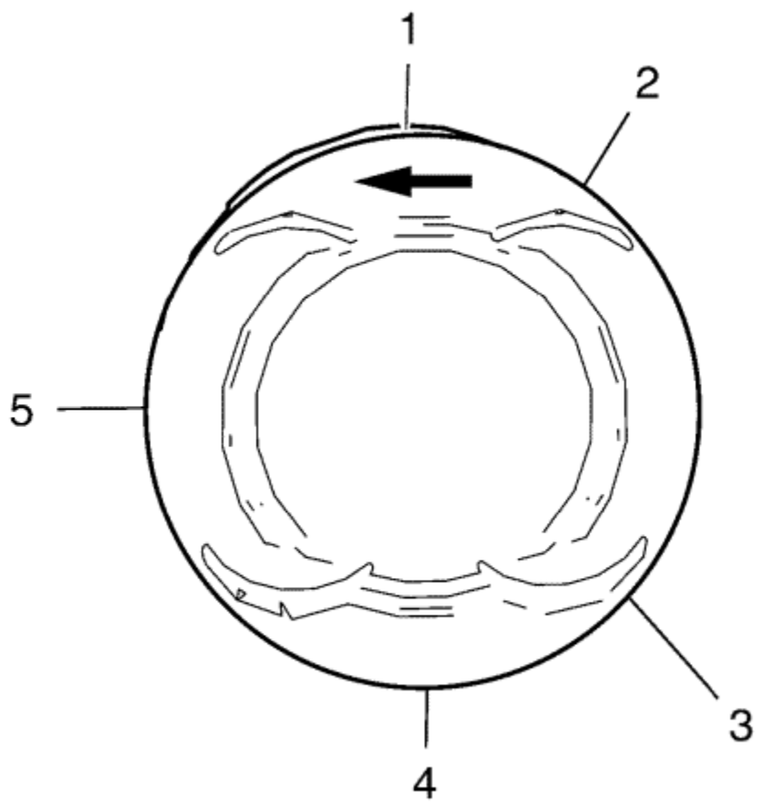

1. Adjust the piston ring joints as follows:

1.1. Upper compression ring (1).
1.2. Lower compression ring (4).
1.3. Oil rings (2) or (3).
1.4. Oil ring spacer (5).

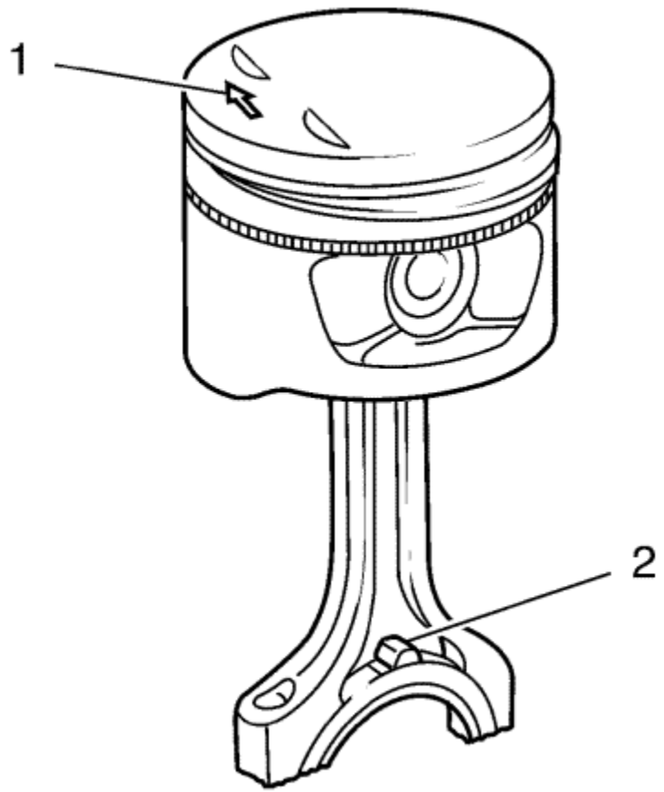

2. The arrow (1) on the piston head must point to the timing side.
3. The markings on the connecting rods (2) must point to the transmission side.

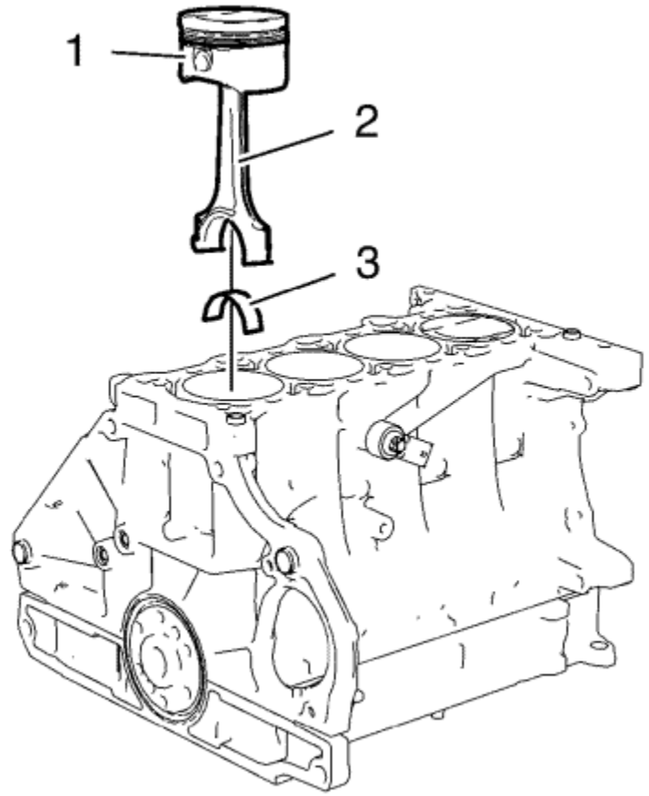

4. Install a suitable piston ring compressor tool in order to compress the piston rings.
5. Install the pistons (1) in compound with connecting rods (2) and upper connecting rod bearings (3) to the engine block and to the crankshaft.

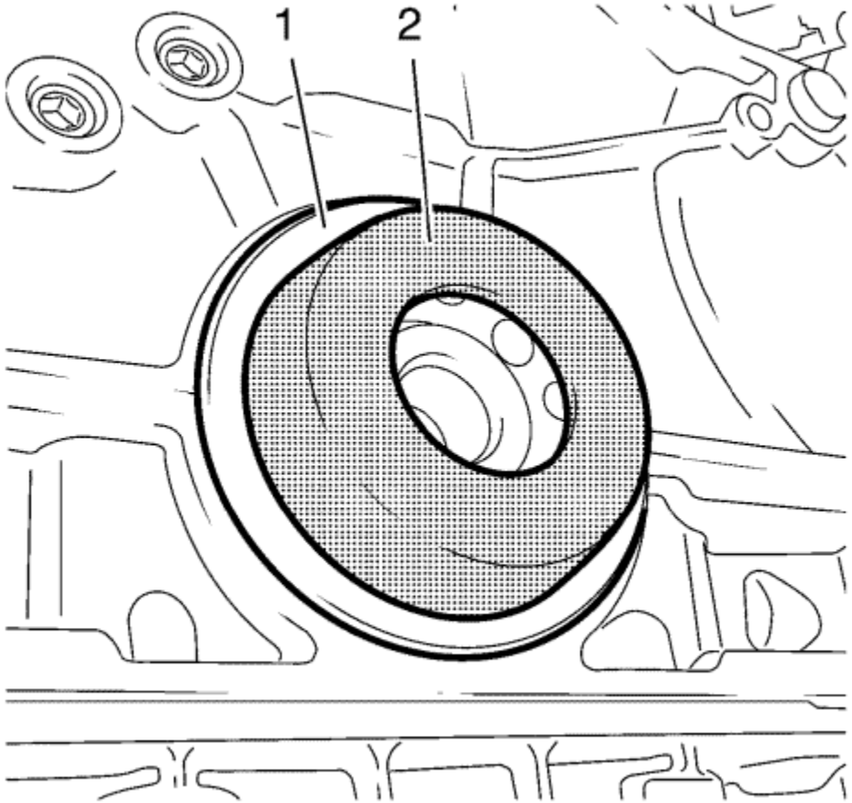

Note: The connecting rod bearing caps must be installed in their original position.

6. Verify that the flarings (1) on the connecting rod bearing caps point to the transmission side.

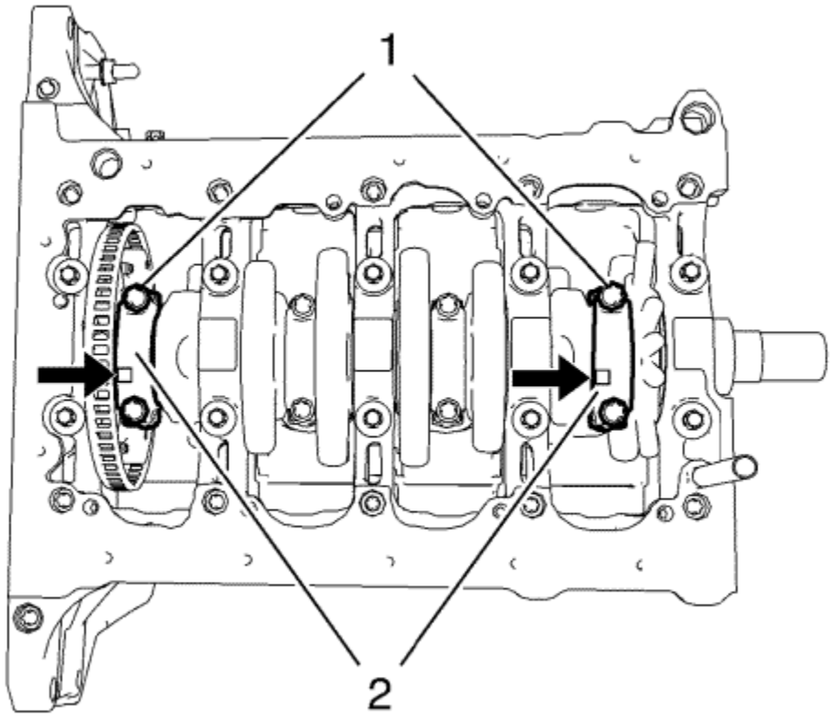

7. Install the 2 connecting rod bearings and the 2 connecting rod bearing caps (2) of cylinder 1 and 4.

   Caution: Refer to Fastener Caution in the Preface section.

   Note: Do not reuse the old bolts.

8. Install the 4 NEW connecting rod bearing cap bolts (1) and tighten in the following sequence:
   8.1. Tighten the connecting rod bearing cap bolts to **25 N·m (18 lb ft)**.
   8.2. Tighten the connecting rod bearing cap bolts an additional **45°**. Use *EN-470-B* spanner .
9. Rotate the crankshaft **180°**.

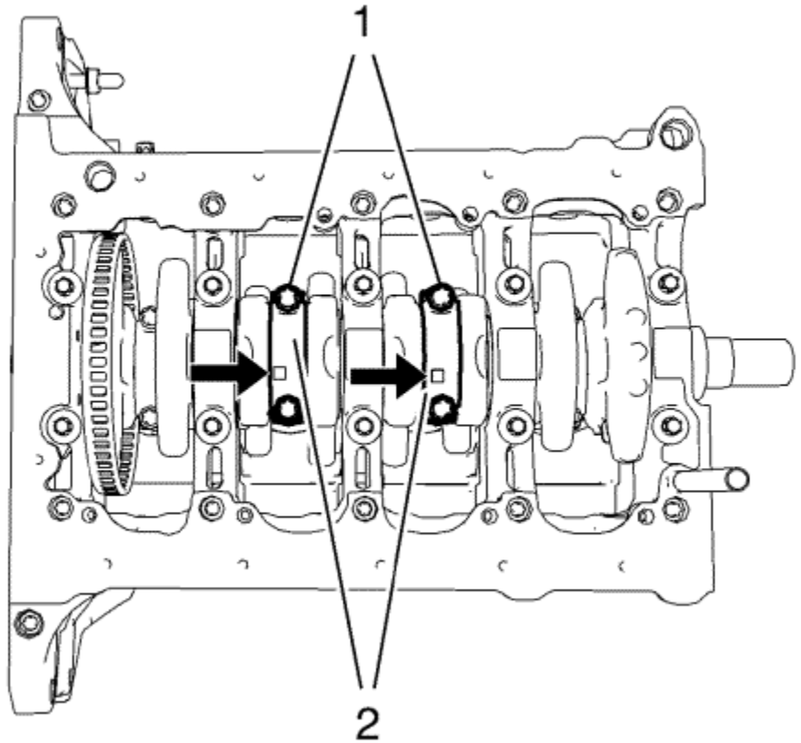

10. Install the 2 connecting rod bearings and the 2 connecting rod bearing caps (2) of cylinder 3 and 2.

    Note: Do not reuse the old bolts.

11. Install the 4 connecting rod bearing cap bolts (1) and tighten in the following sequence:
    11.1. Tighten the connecting rod bearing cap bolts to **25 N·m (18 lb ft)**.
    11.2. Tighten the connecting rod bearing cap bolts an additional **45°**. Use *EN-470-B* spanner .

© Copyright Chevrolet. All rights reserved

Cylinder Head Installation

Special Tools

EN-470-B Angular Torque Wrench .

For equivalent regional tools, refer to Special Tools .

Warning: Wear safety glasses when using compressed air in order to prevent eye injury.

1. Clean the sealing surfaces and remove all remains of dirt and old gasket material from thread bores, water galleries and oil galleries.

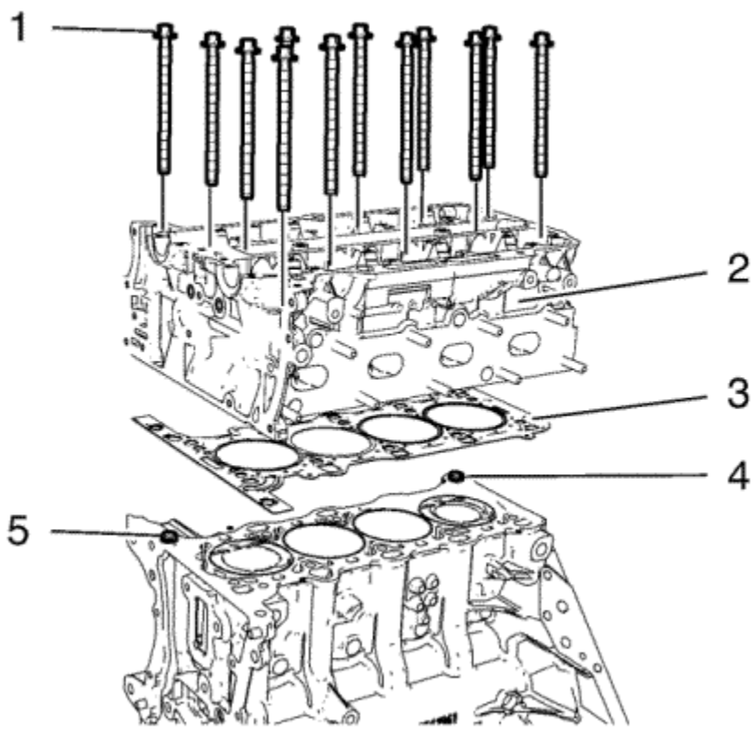

Note: Mind the guide sleeves (4) and (5).

2. Install a NEW cylinder head gasket (3). The marking "Top" should point to the cylinder head.
3. Install the cylinder head (2).
4. Install the 12 cylinder head bolts (1) and hand-tighten.

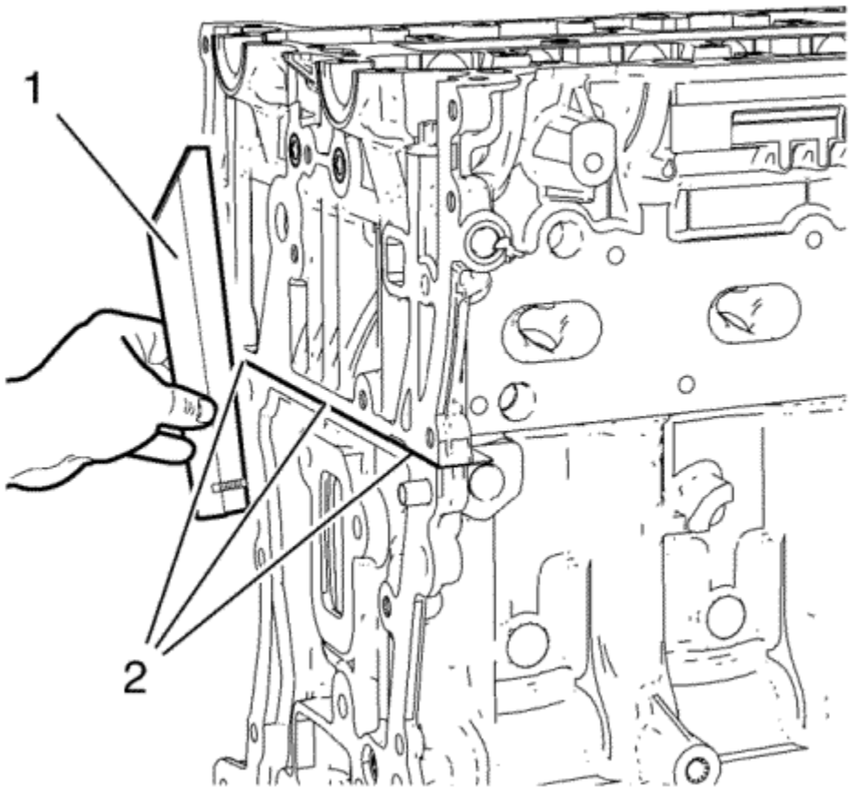

5. Lay on a straight edge (1) to engine block and cylinder head and adjust the transition in area (2) until there is no clearance between cylinder head and straight edge. Use a rubber mallet.

Caution: Refer to Fastener Caution in the Preface section.

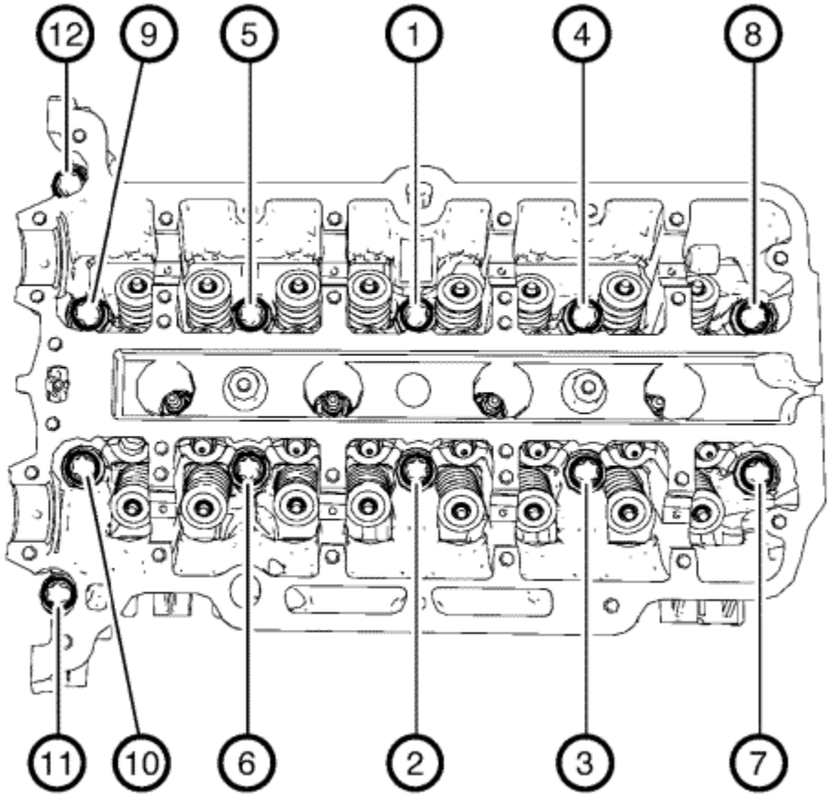

6. Tighten the cylinder head bolts in the sequence as shown and in the following order:
   6.1. Tighten the cylinder head bolts to **35 N·m (26 lb ft)**.
   6.2. Tighten the cylinder head bolts an additional **180°**. Use *EN-470-B* wrench .

© Copyright Chevrolet. All rights reserved

Hydraulic Valve clearance Adjuster Installation

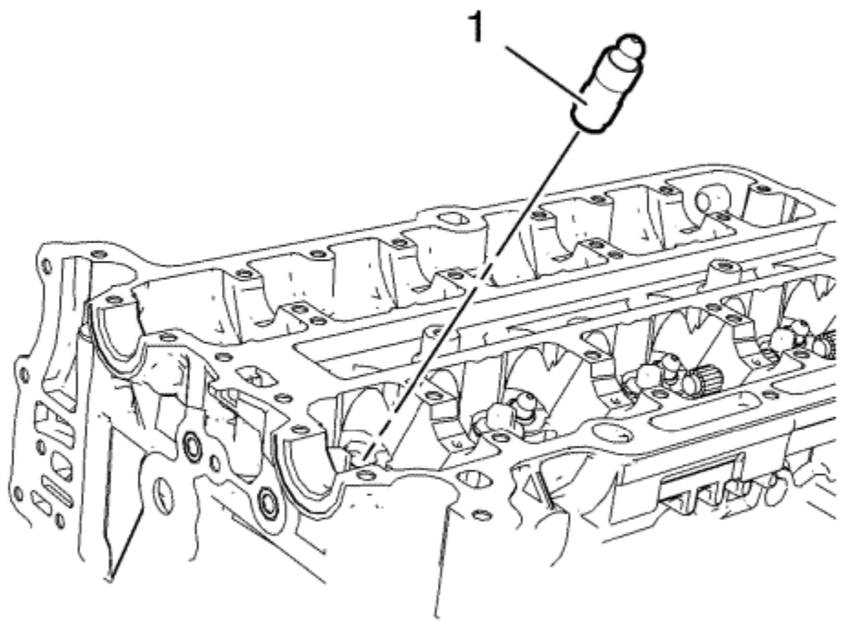

Note: Mind the installation position of the hydraulic valve clearance adjusters.

1. Lubricate the hydraulic valve clearance adjusters with engine oil.
2. Install the 16 hydraulic valve clearance adjusters (1).

© Copyright Chevrolet. All rights reserved

Hydraulic Valve Clearance Adjuster Arm Installation

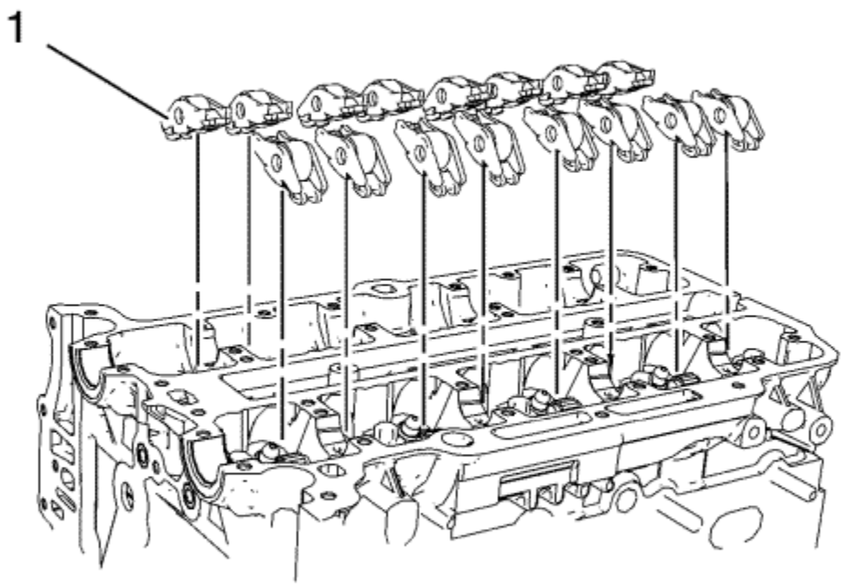

Note: Hydraulic valve clearance adjuster arms should be installed in their original position.

1. Lubricate the hydraulic valve clearance adjuster arms with engine oil.
2. Install the 16 hydraulic valve clearance adjuster arms (1).

© Copyright Chevrolet. All rights reserved

Intake Camshaft Installation

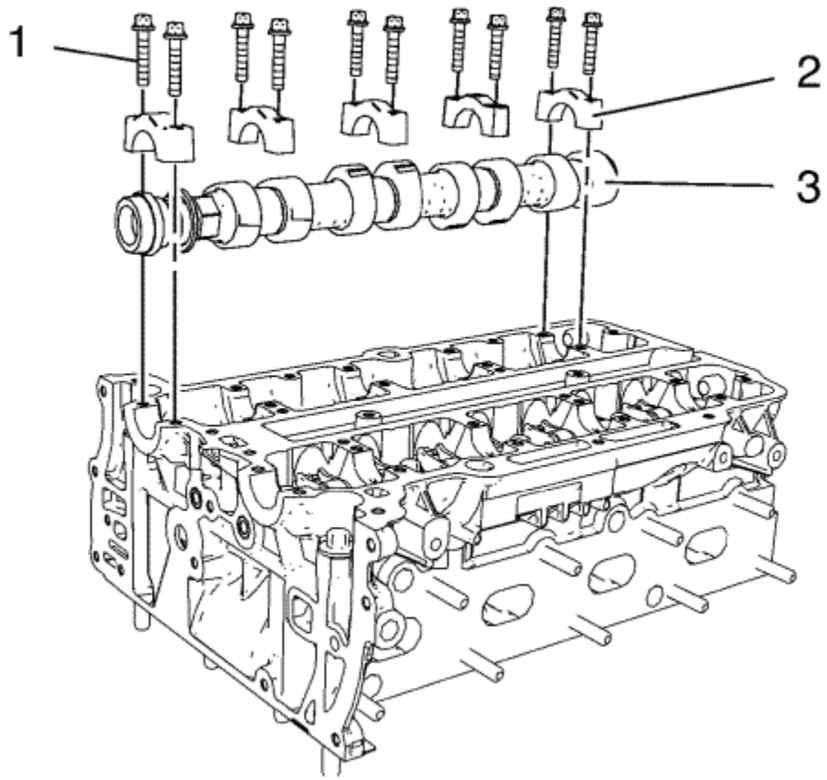

Note: Mind the markings on the camshaft bearing caps. Camshaft bearing caps should be installed in their original position.

1. Lubricate camshaft and camshaft bearing caps with engine oil.
2. Install the intake camshaft (3).
3. Install the 5 camshaft bearing caps (2).
4. Install the 10 camshaft bearing cap bolts (1) and hand-tighten.

Caution: Refer to Fastener Caution in the Preface section.

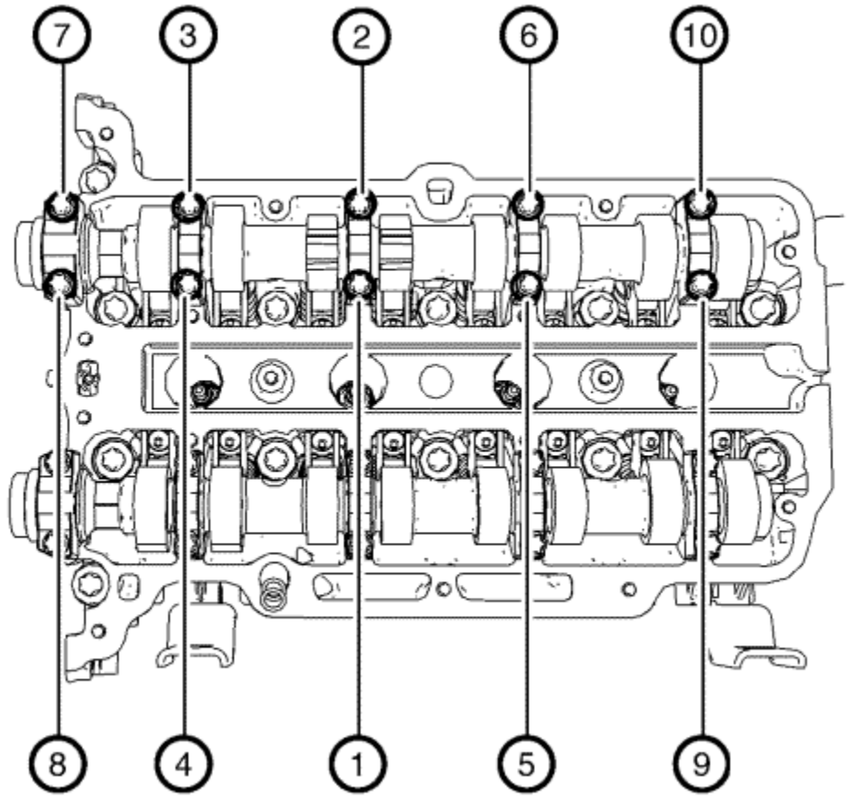

Note: Tighten the camshaft bearing cap bolts one turn at a time in order to avoid shape distortion of the camshaft.

5. Tighten the camshaft bearing cap bolts one turn at a time and in a spiral sequence as shown to **8 N·m (71 lb in)**.

© Copyright Chevrolet. All rights reserved

Exhaust Camshaft Installation

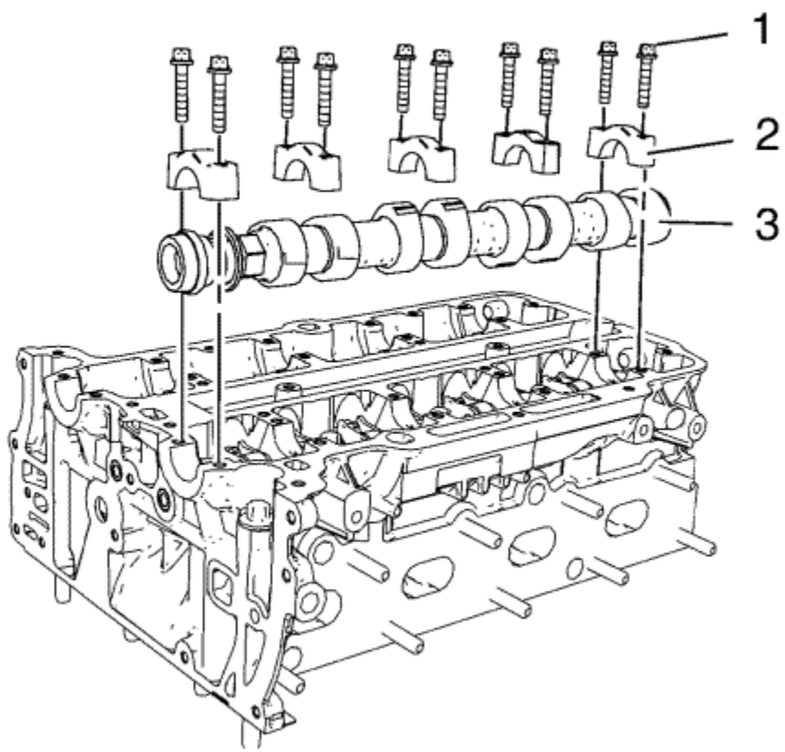

Note: Mind the markings on the camshaft bearing caps. Camshaft bearing caps should be installed in their original position.

1. Lubricate camshaft and camshaft bearing caps with engine oil.
2. Install the exhaust camshaft (3).
3. Install the 5 camshaft bearing caps (2).
4. Install the 10 camshaft bearing cap bolts (1) and hand-tighten.

Caution: Refer to Fastener Caution in the Preface section.

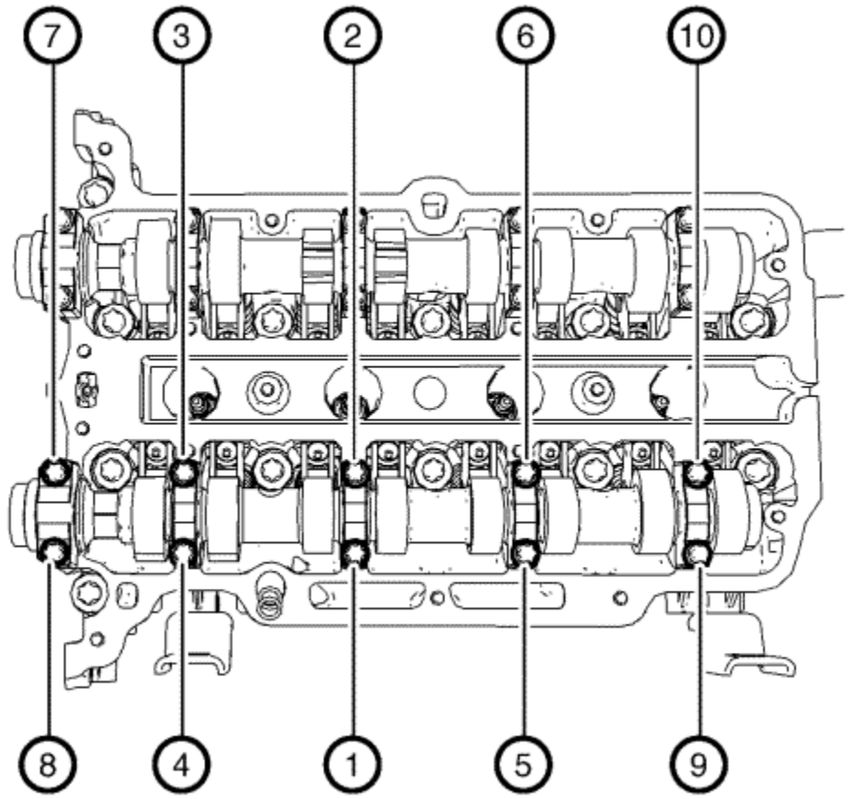

Note: Tighten the camshaft bearing cap bolts one turn at a time in order to avoid shape distortion of the camshaft.

5. Tighten the camshaft bearing cap bolts one turn at a time and in a spiral sequence as shown to **8 N·m (71 lb in)**.

© Copyright Chevrolet. All rights reserved

Camshaft Sprocket Installation

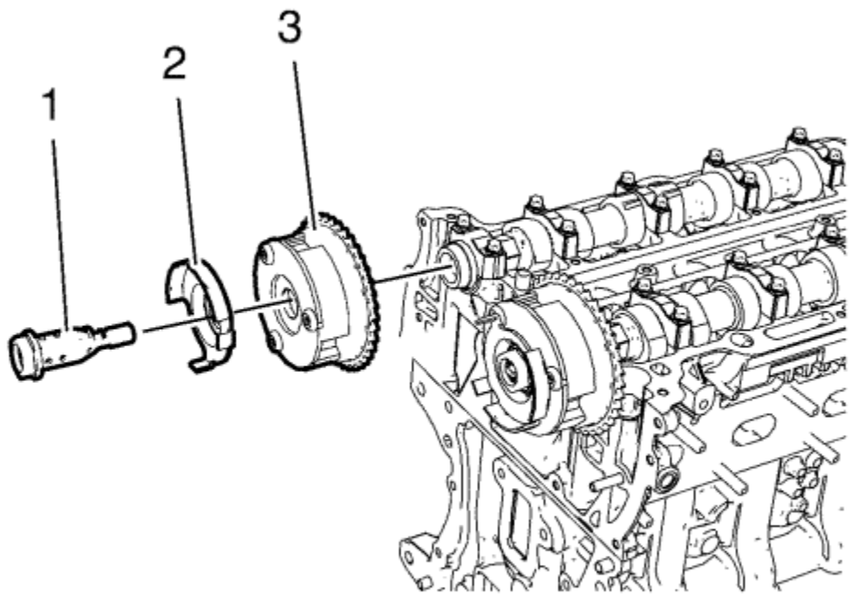

1. Install the inlet camshaft sprocket (3).
2. Install the inlet camshaft position sensor exciter wheel (2) and the inlet camshaft sprocket bolt (1).
3. Install the exhaust camshaft sprocket.
4. Install the exhaust camshaft position sensor exciter wheel and the exhaust camshaft sprocket bolt.

Tightening of camshaft sprocket bolts will be done after engine front cover installation.

© Copyright Chevrolet. All rights reserved

Timing Chain Tensioner Installation

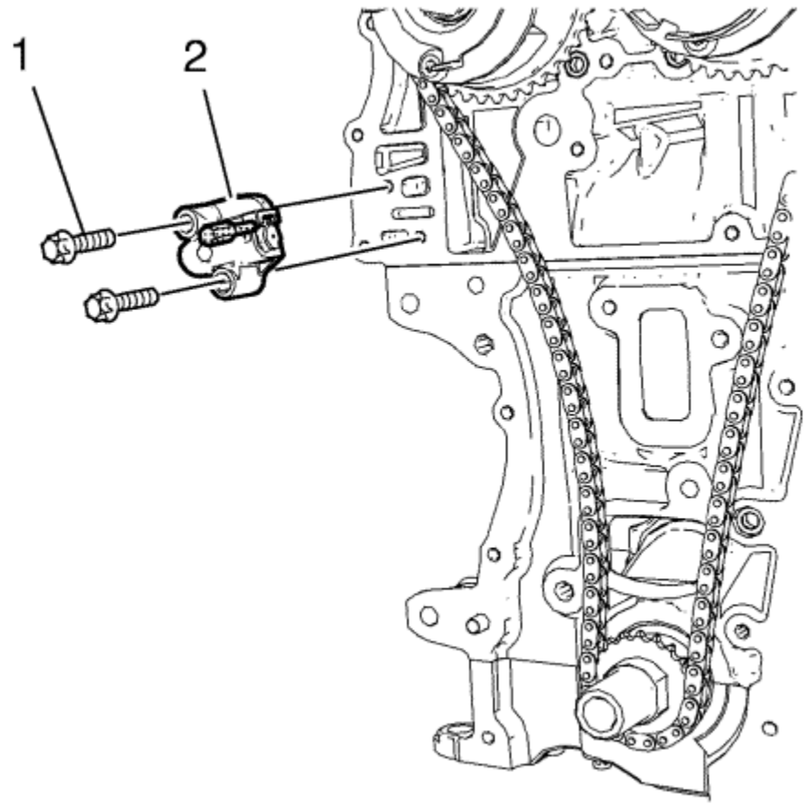

1. Install the timing chain tensioner (2).

   Caution: Refer to Fastener Caution in the Preface section.

2. Install the 2 timing chain tensioner bolts (1) and tighten to **8 N·m (71 lb in)**.

© Copyright Chevrolet. All rights reserved

Engine Front Cover Gasket Installation

Note: The complete installation procedure should be done in 10 minutes.

1. Clean the sealing surfaces and remove all remains of old sealing compound material.

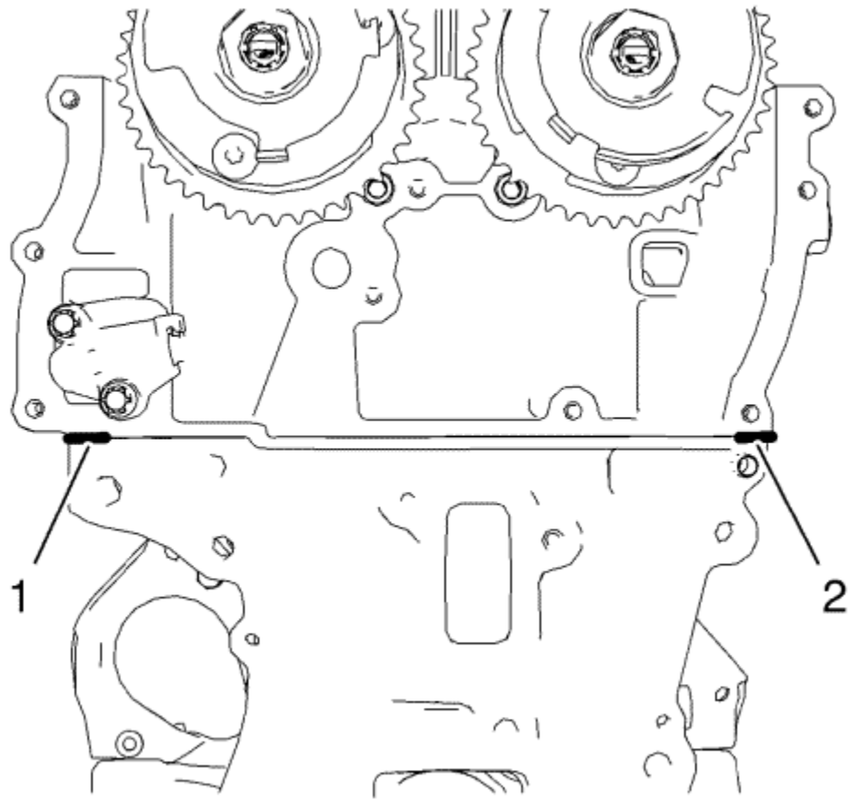

Note: Refer to electronic parts catalogue to find a suitable sealing compound.

2. Apply sealing compound to the shown areas (1) and (2). The thickness of the sealing bead should be **2 mm (0.0787 in)**.

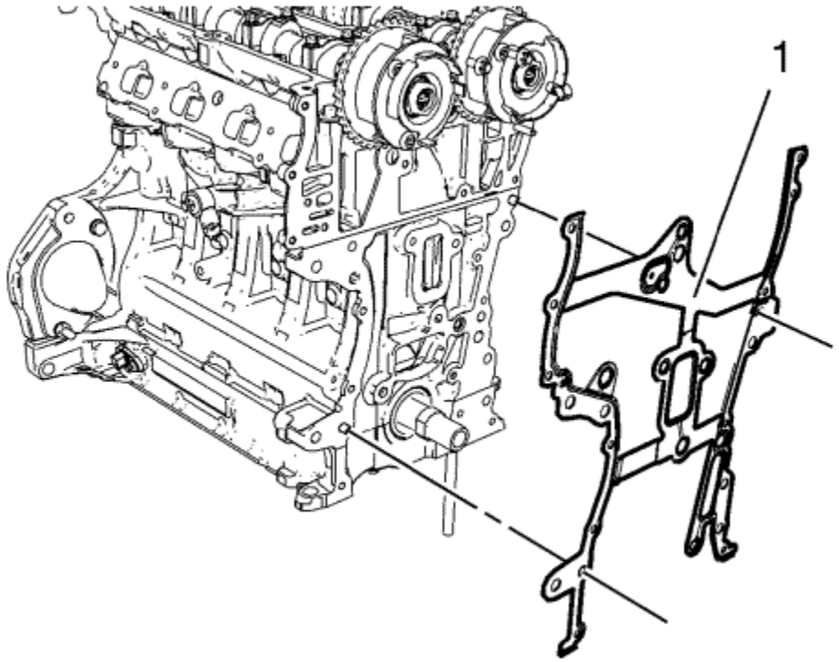

Note: Mind the guide sleeves.

3. Install the engine front cover gasket (1).
4. Install the timing chain. Refer to Camshaft Timing Chain Installation .
5. Install the engine front cover. Refer to Engine Front Cover and Oil Pump Installation .

© Copyright Chevrolet. All rights reserved

Camshaft Timing Chain Installation

Special Tools

- *EN-952* Fixing Pin
- *EN-953-A* Fixing Tool
- *EN-955-1* Fixing Pin from *EN-955* Kit

For equivalent regional tools, refer to Special Tools .

1. The engine should be adjusted to TDC.
2. The crankshaft should be fixed with *EN-952* fixing pin.
3. The camshaft should be fixed with *EN-953-A* fixing tool.

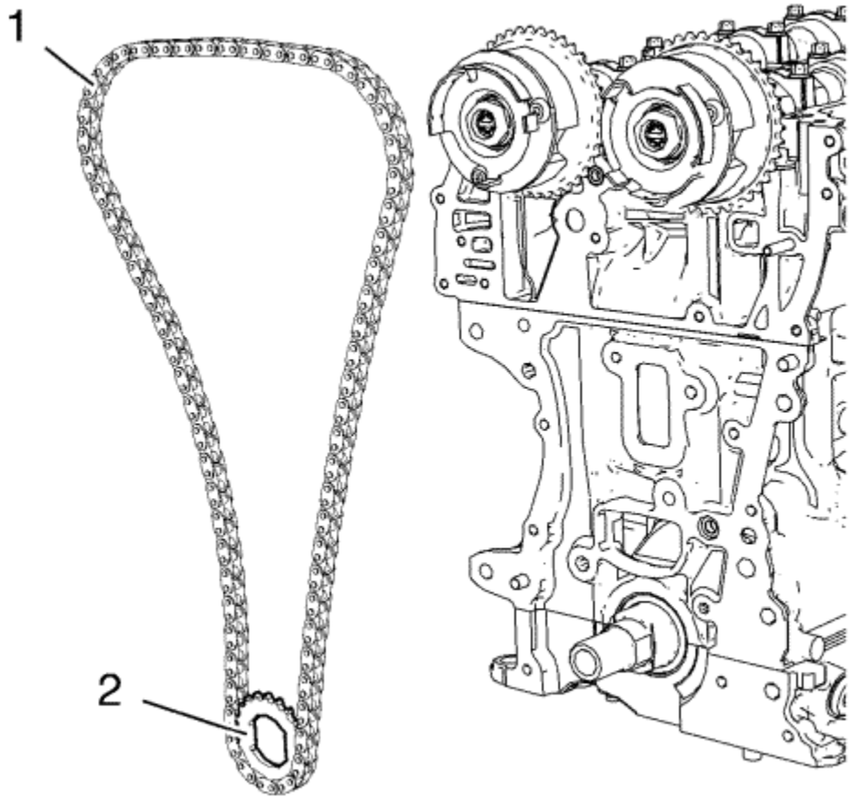

4. Install the timing chain (1) in compound with the crankshaft sprocket (2).

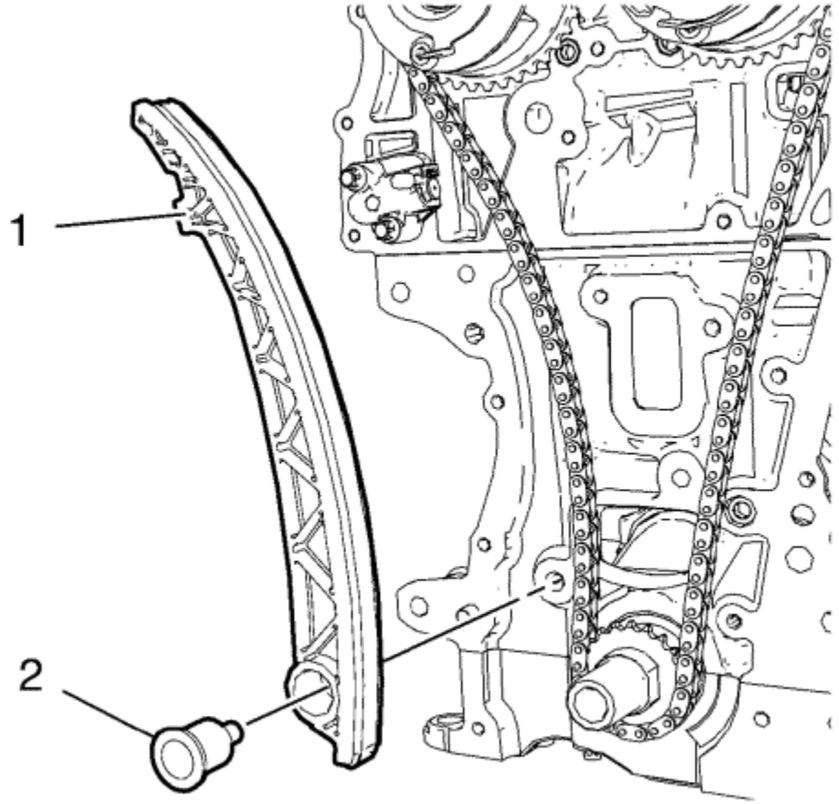

5. Install the timing chain tensioner shoe (1).

   Caution: Refer to Fastener Caution in the Preface section.

6. Install the timing chain tensioner shoe bolt (2) and tighten to **20 N·m (15 lb ft)**.

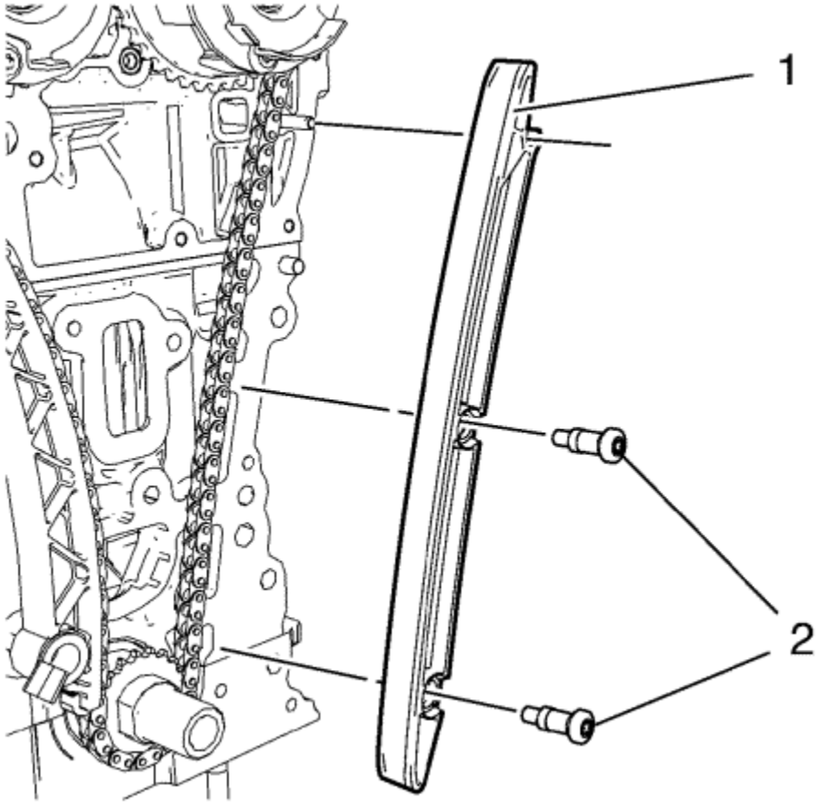

7. Install the timing chain guide right side (1).
8. Install the 2 timing chain guide right side bolts (2) and tighten to **8 N·m (71 lb in)**.

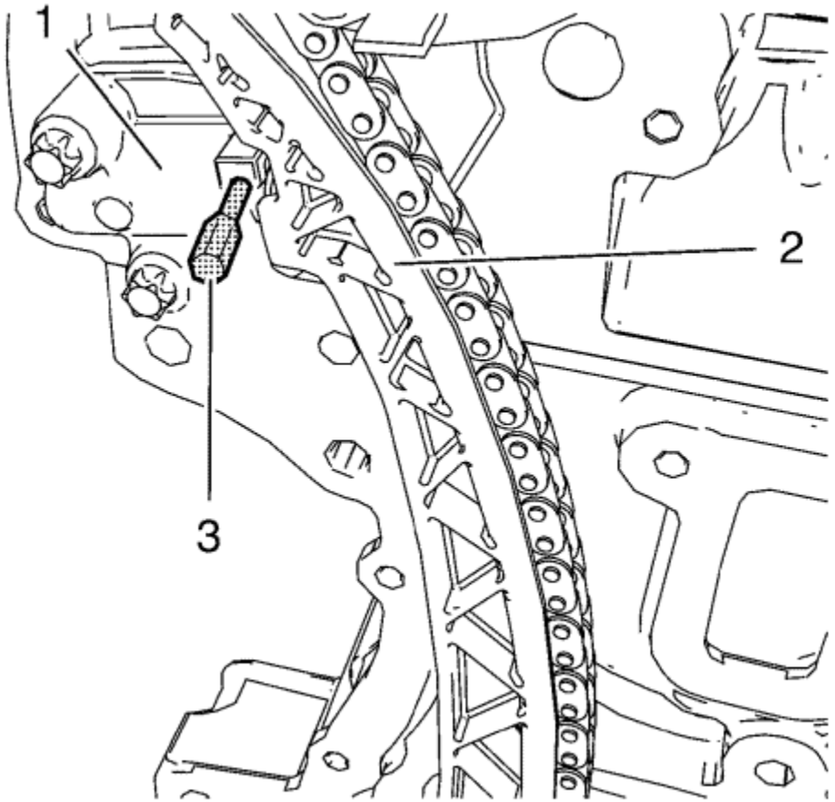

9. Push the timing chain (2) in direction to the timing chain tensioner (1) and remove *EN-955-1* fixing pin (3).

The upper timing chain guide will be installed after the installation of the engine front cover and the fastening of the camshaft sprockets.

&#169© Copyright Chevrolet. All rights reserved

Engine Front Cover and Oil Pump Installation

Special Tools

- *EN-952* Fixing Pin
- *EN-953-A* Fixing Tool
- *EN-49977-100* Transmitter Disc Fixation
- *EN-49977-200* Fixing Tool

For equivalent regional tools, refer to Special Tools .

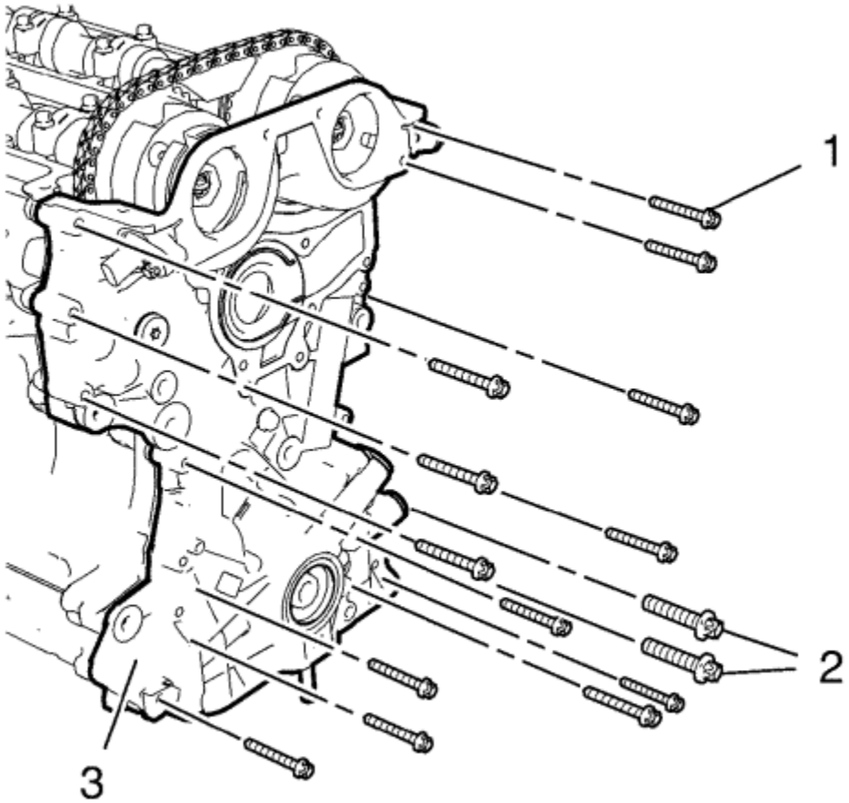

Note: Mind the guide sleeves when installing engine front cover.

1. Install the engine front cover (3).
2. Install the 13 engine front cover bolts M6 (1).
3. Install the 2 engine front cover bolts M10 (2).

Caution: Refer to Fastener Caution in the Preface section.

4. Tighten the 13 engine front cover bolts M6 to **8 N·m (71 lb in)**.
5. Tighten the 2 engine front cover bolts M10 to **35 N·m (26 lb ft)**.

Camshaft Sprocket Fastening

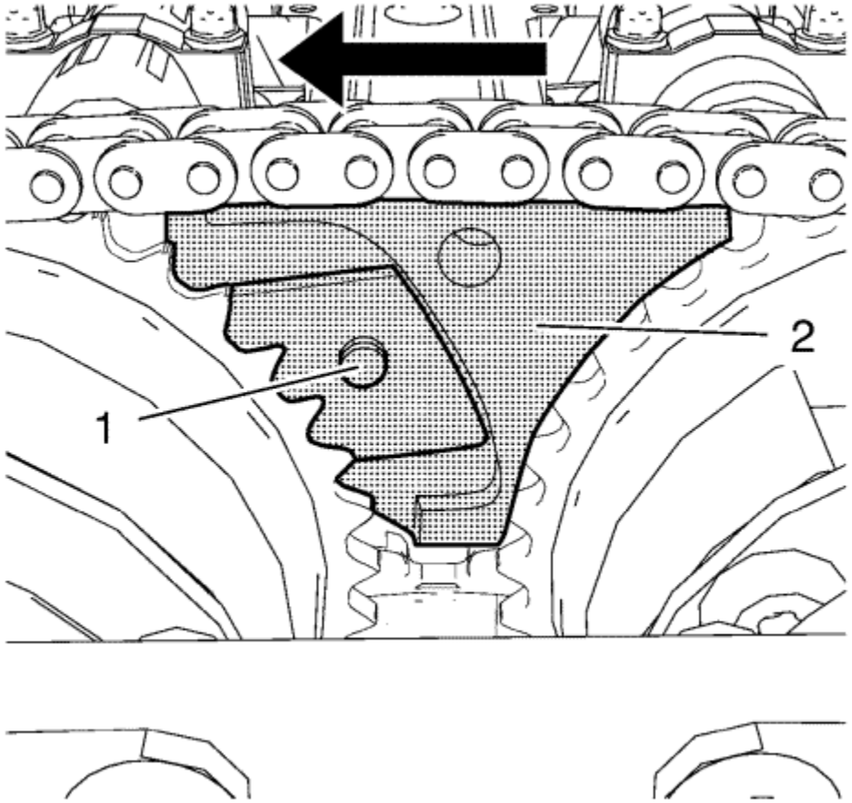

Note: Push the fixing tool in the direction of the arrow to ensure it engages without clearance.

1. Install *EN-49977-200* fixing tool (2) and adjust that the gearing (1) of the fixing tool engages with the inlet camshaft sprocket gearing (1).

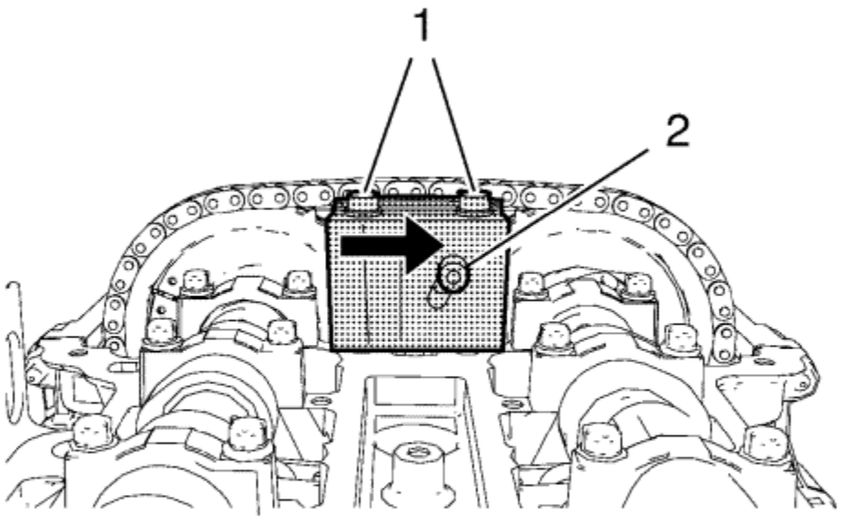

2. Tighten the 2 fastening bolts (1) of *EN-49977-200* fixing tool while pushing the fixing tool in direction of the arrow.
3. Tighten the adjuster bolt (2).

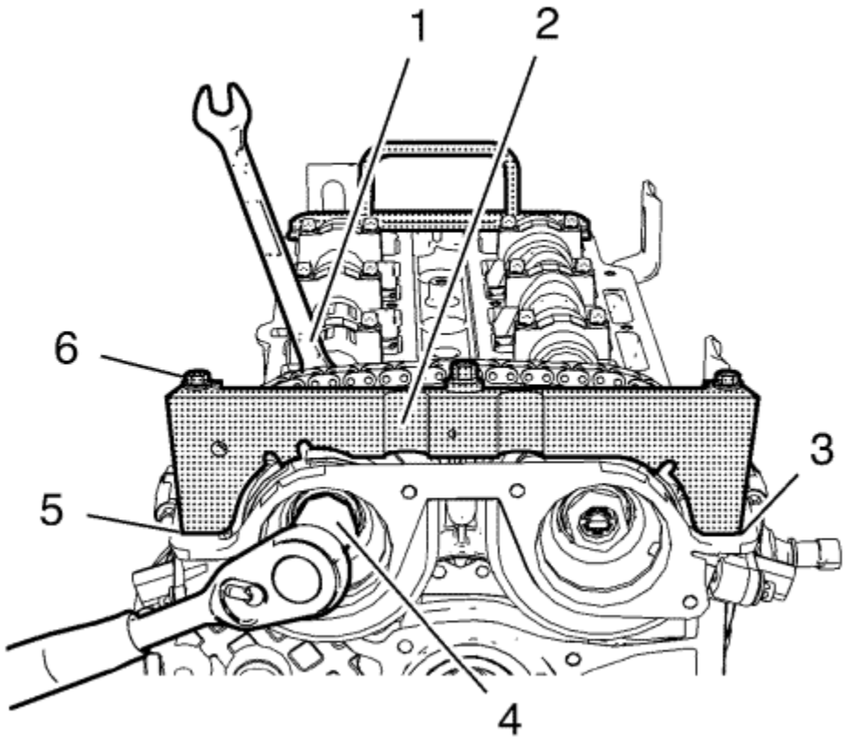

Note: A wrong installation position is possible. Make sure that the fixation tool is installed without clearance to the cylinder head in areas (3) and (5).

4. Install *EN-49977-100* transmitter disc fixation (2) in order to find and fix the correct position of the camshaft position exciter wheels.
5. Tighten the fastening bolts (6) of *EN-49977-100* transmitter disc fixation.

   Caution: Refer to Fastener Caution in the Preface section.

6. Tighten the intake camshaft sprocket bolt (4) while holding up the hexagon (1) of the intake camshaft to **50 N·m (37 lb ft)**.
7. Tighten the intake camshaft sprocket bolt (4) while holding up the hexagon (1) of the intake camshaft to an additional **60°**.
8. Tighten the exhaust camshaft sprocket bolt while holding up the hexagon of the exhaust camshaft to **50 N·m (37 lb ft)**.
9. Tighten the exhaust camshaft sprocket bolt while holding up the hexagon of the exhaust camshaft to an additional **60°**.
10. Remove *EN-49977-100* transmitter disc fixation and *EN-49977-200* fixing tool.

Upper timing chain guide installation

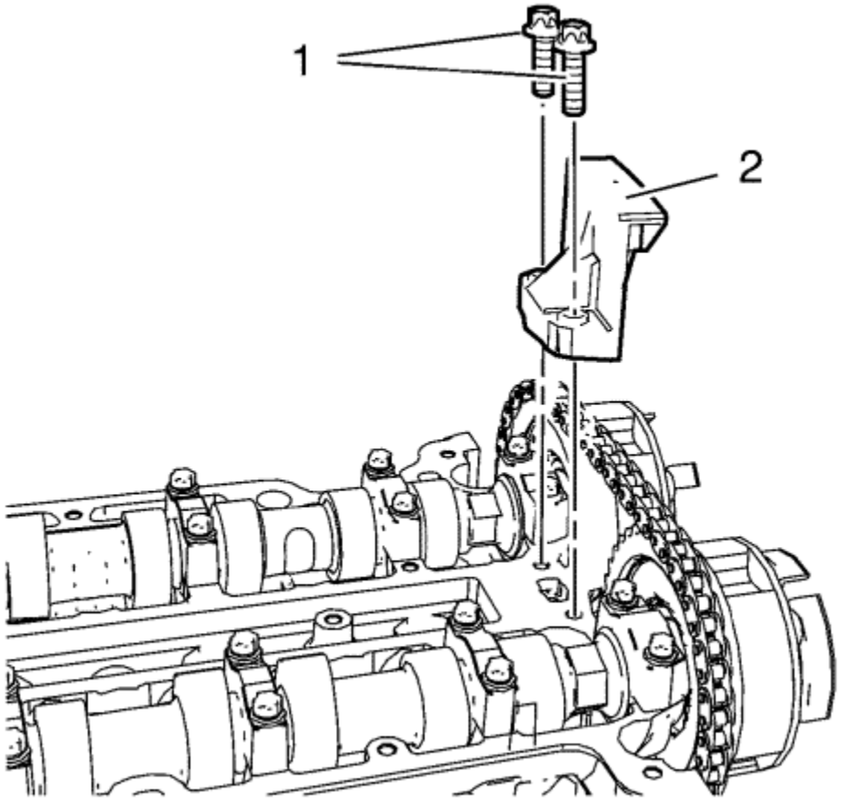

1. Install the upper timing chain guide (2).
2. Install the 2 upper timing chain guide bolts (1) and tighten to **8 N·m (71 lb in)**.
3. Remove *EN-953-A* fixing tool and *EN-952* fixing pin.
4. Install crankshaft bearing cap tie plate hole plug and seal ring and tighten to **40 N·m (30 lb ft)**.

&#169© Copyright Chevrolet. All rights reserved

Sump Installation

Special Tools

EN-49980 Guidance Pins

For equivalent regional tools, refer to Special Tools .

Note: Refer to electronic parts catalogue to find a suitable sealing compound.

1. Clean the sealing surfaces from old sealing material, dirt, oil and grease.

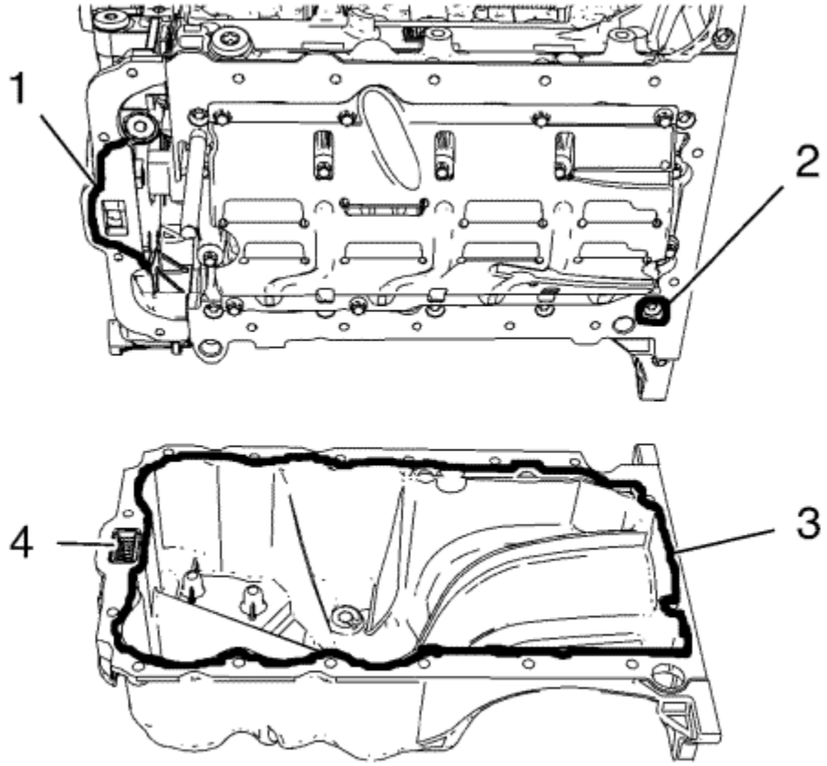

Note: The sealing bead should be applied close to the inner edge of the oil sump. Take care that the oil suction gallery (4) will not get contaminated with sealing compound or dirt.

2. Apply sealing compound to the oil sump. The thickness of the sealing bead (3) should be **2 mm (0.0787 in).**
3. Apply sealing compound to the groove of the engine front cover (1).
4. Apply sealing compound around the screw bore (2) of the crankshaft bearing cap tie plate.
5. Install the oil sump seal rings to the grooves of the engine front cover.

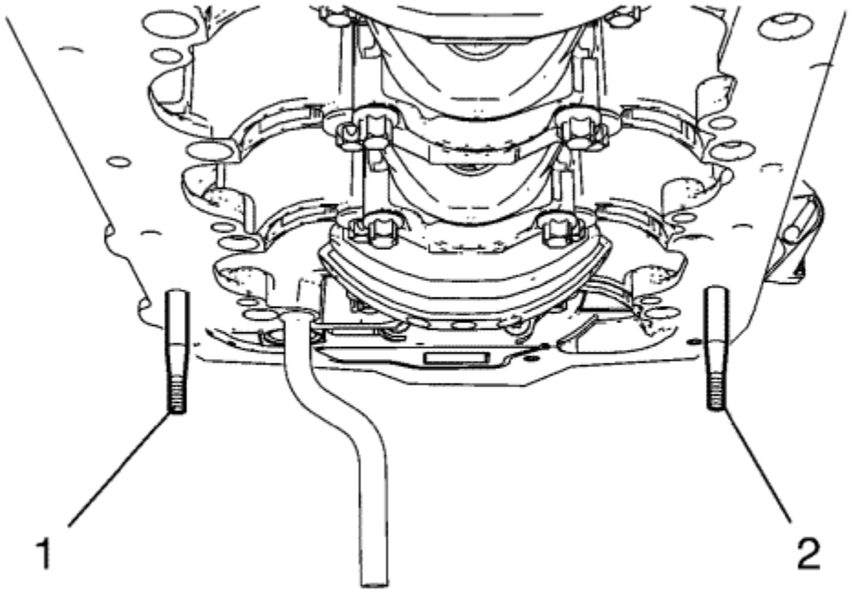

Note: The complete installation procedure of the oil sump should be done in 10 minutes.

6. Install the 2 *EN-49980* pins (1) and (2) to the shown oil sump screw bores.

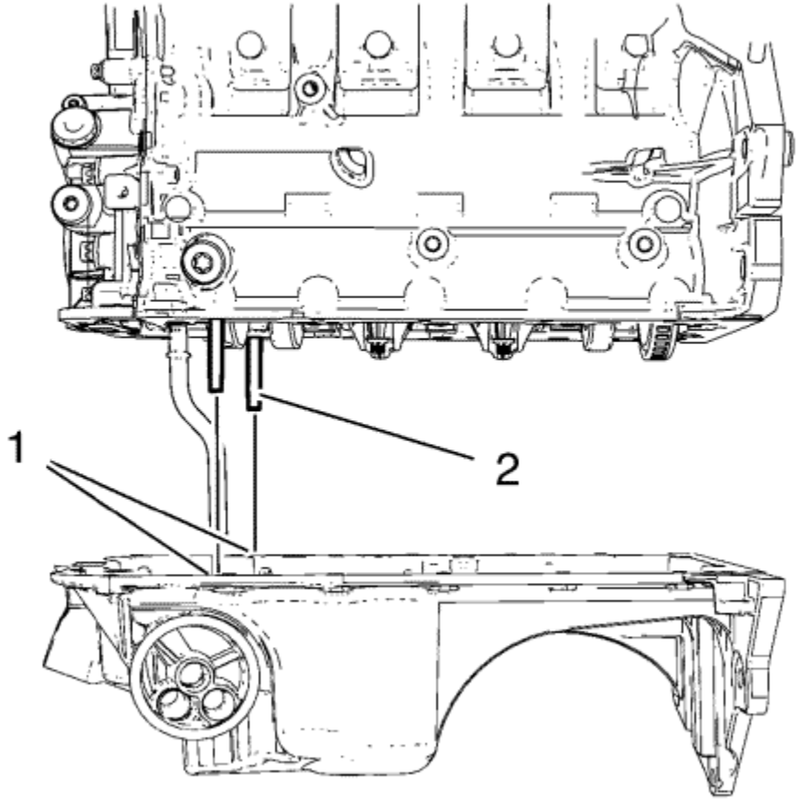

Note: Take care that the sealing bead will not get smeared while the installation procedure. A smeared sealing bead in the area around the oil suction gallery will cause engine damage.

7. Cautiously install the oil sump. Guide the oil sump with *EN-49980* pins (2) and the equivalent screw bores (1).
8. Fix the oil sump with 4 oil sump bolts.
9. Remove *EN-49980* pins.
10. Install the remaining 12 sump bolts and hand tighten.

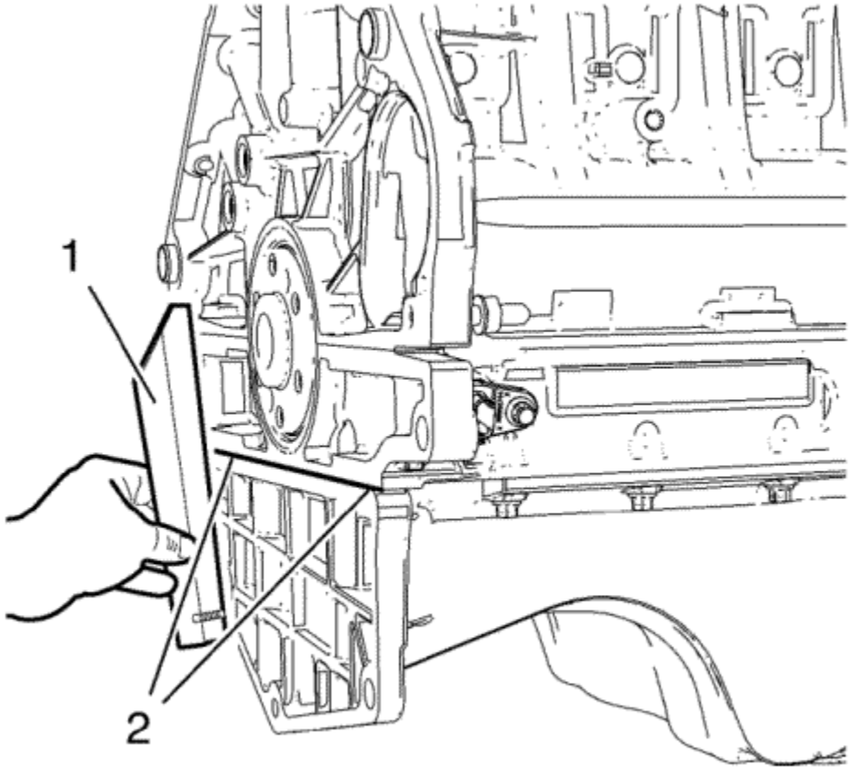

11. Lay on a straight edge (1) to oil sump and engine block and adjust the transition in area (2) until there is no clearance between oil sump and straight edge. Use a rubber mallet.

    Caution: Refer to Fastener Caution in the Preface section.

12. Tighten the 16 oil sump bolts to **10 N·m (89 lb in)**.

© Copyright Chevrolet. All rights reserved

Camshaft Position Actuator Solenoid Valve Installation

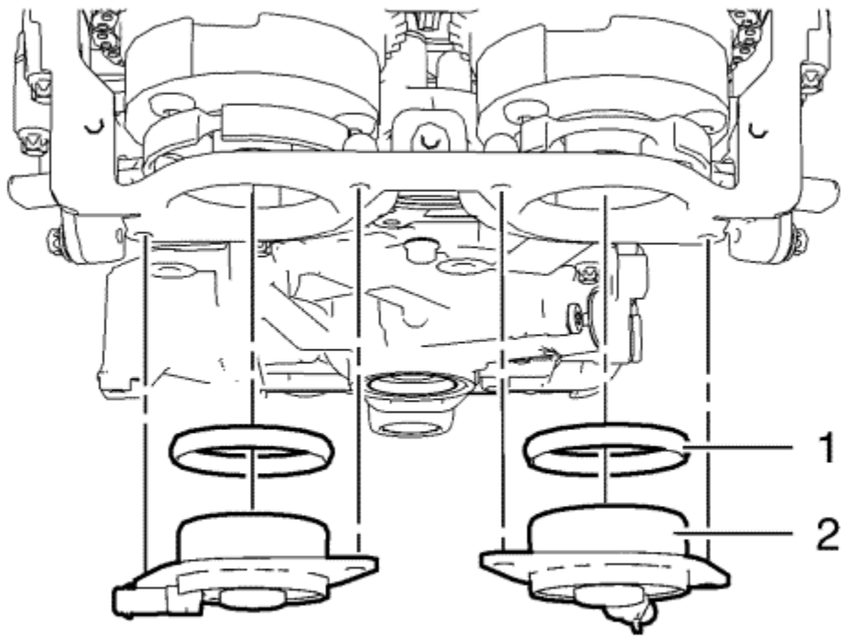

Caution: The camshaft position actuator solenoid valves must be kept parallel to the engine front cover during removal and installation. The camshaft position actuator solenoid valves can be damaged if they become wedged or stuck during this process.

1. Install the 2 camshaft position actuator solenoid valves (2) and the 2 seal rings (1) by carefully and evenly pressing.

   Caution: Refer to Fastener Caution in the Preface section.

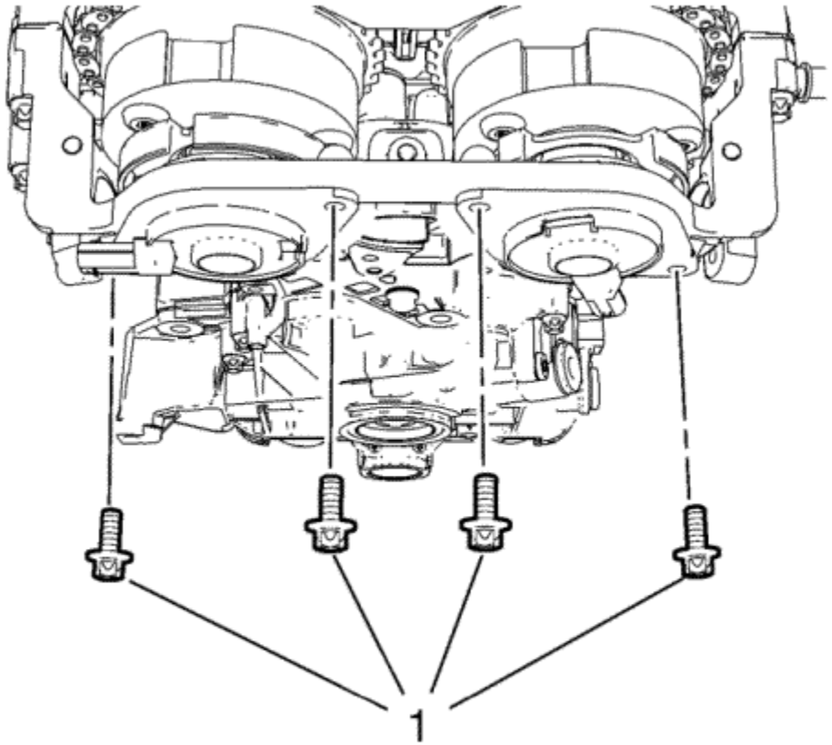

2. Install the 4 camshaft position actuator solenoid valve bolts (1) and tighten to **8 N·m (71 lb in)**.

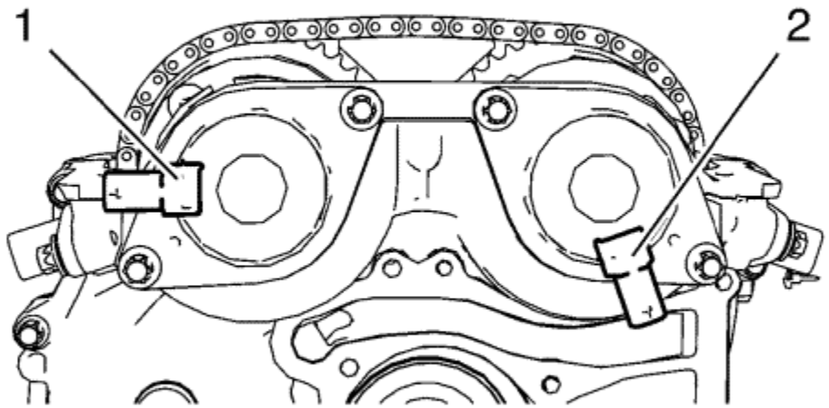

3. The 2 camshaft position actuator solenoid valves should be installed in the position as shown (1) and (2).

© Copyright Chevrolet. All rights reserved

Camshaft Cover Installation

1. Clean the sealing surfaces.

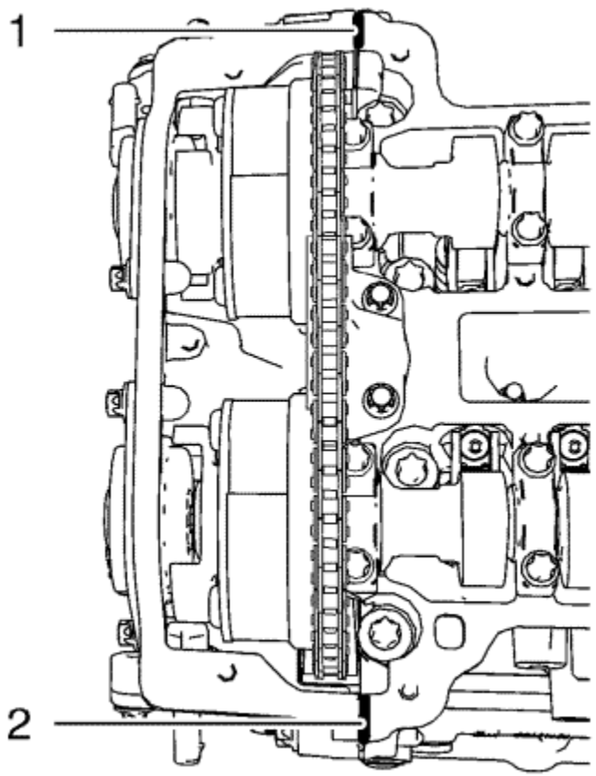

Note: The thickness of the sealing bead should be **2 mm (0.0787 in)**.

2. Apply sealing compound to areas (1) and (2). Refer to Adhesives, Fluids, Lubricants, and Sealers .

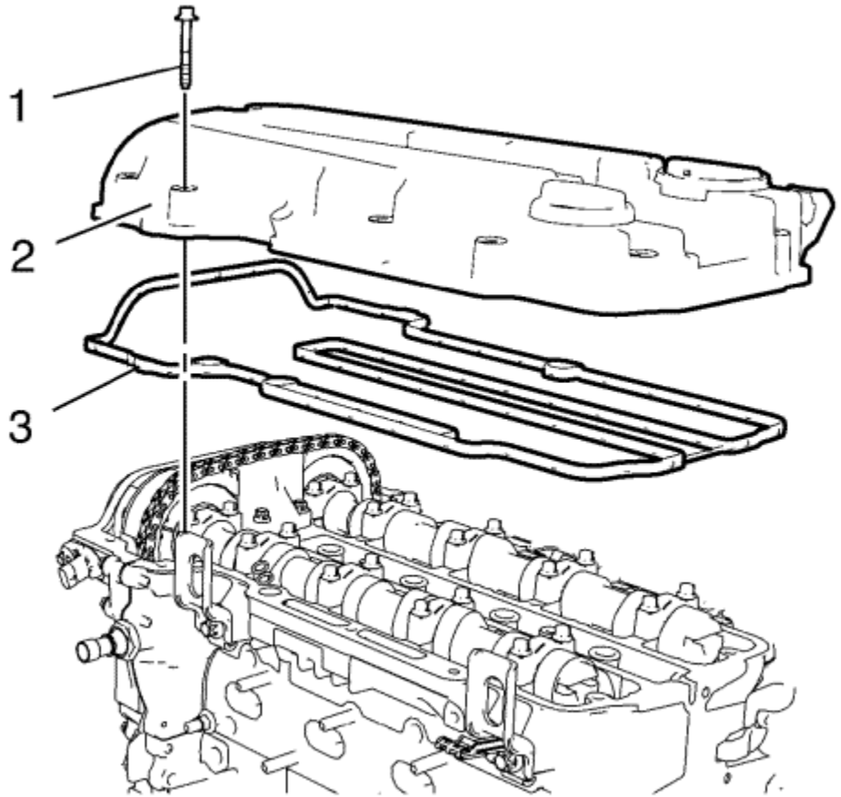

Note: The installation procedure should not take longer than 10 minutes.

3. Install the camshaft cover (2) and a NEW gasket (3).
4. Install the 15 camshaft cover bolts (1).

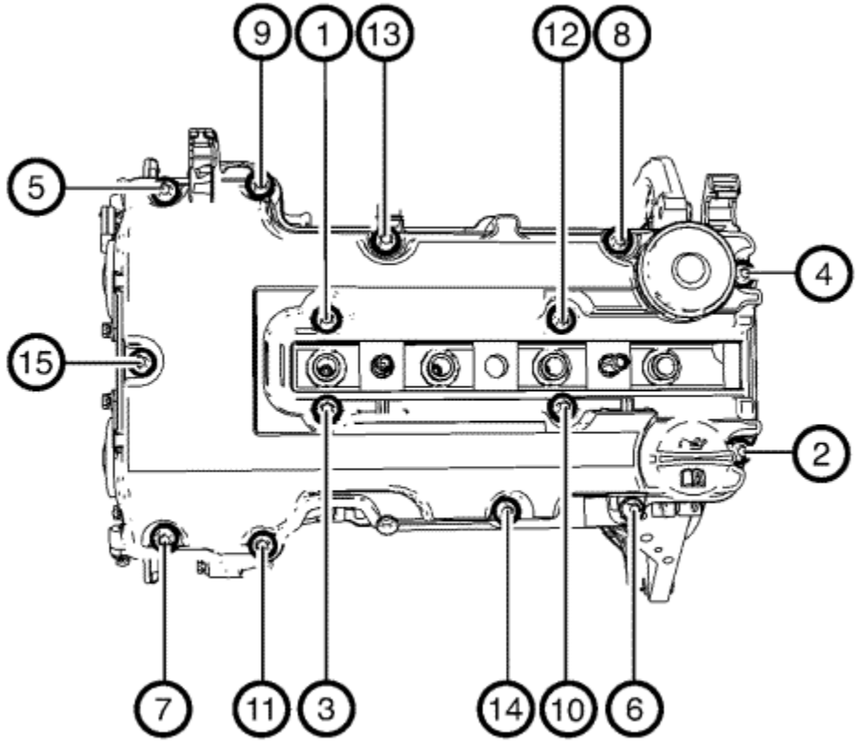

5. Tighten the 15 camshaft cover bolts in a sequence as shown to **8 N·m (71 lb in)**.

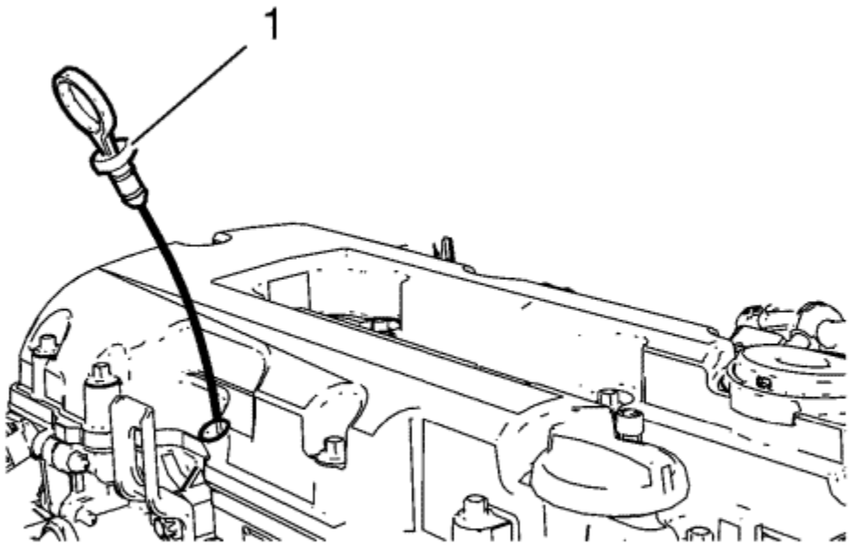

6. Install the oil level indicator (1).

© Copyright Chevrolet. All rights reserved

Ignition Coil Installation

Special Tools

EN-6009 Remover and Installer Ignition Module

For equivalent regional tools, refer to Special Tools .

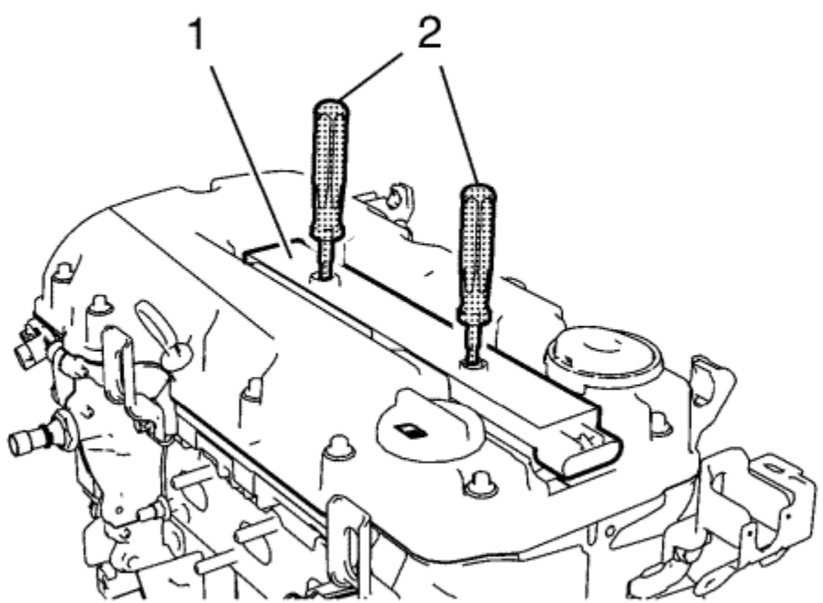

1. Install the ignition coil (1) and remove *EN-6009* remover and installer (2).

Caution: Refer to Fastener Caution in the Preface section.

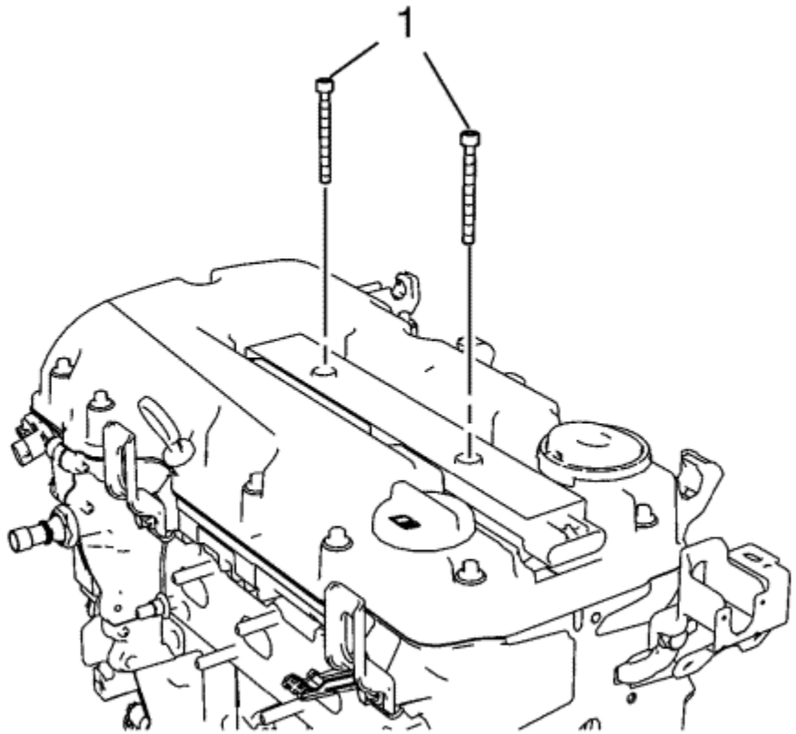

2. Install the 2 ignition coil bolts (1) and tighten to **8 N·m (71 lb in)**.

© Copyright Chevrolet. All rights reserved

Oil Filter Installation

Special Tools

EN-726-A Oil Filter Spanner

For equivalent regional tools, refer to Special Tools .

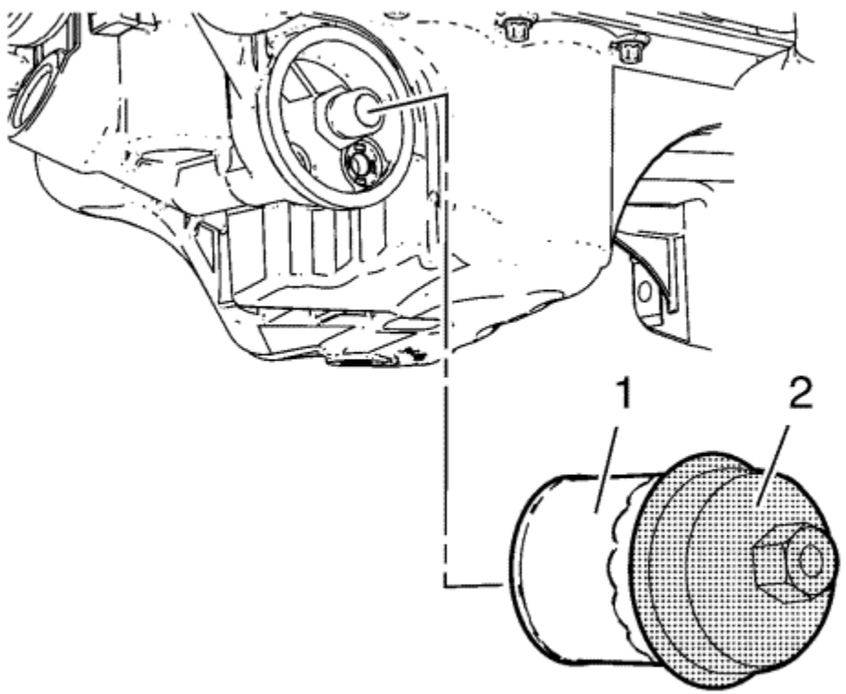

1. Install the *EN-726-A* wrench (2) to the oil filter (1).

Caution: Refer to Fastener Caution in the Preface section.

2. Install the oil filter to the oil sump and tighten to **20 N·m (15 lb ft)**.
3. Remove the *EN-726-A* wrench.

© Copyright Chevrolet. All rights reserved

Inlet Manifold Installation

1. Clean the sealing surfaces.

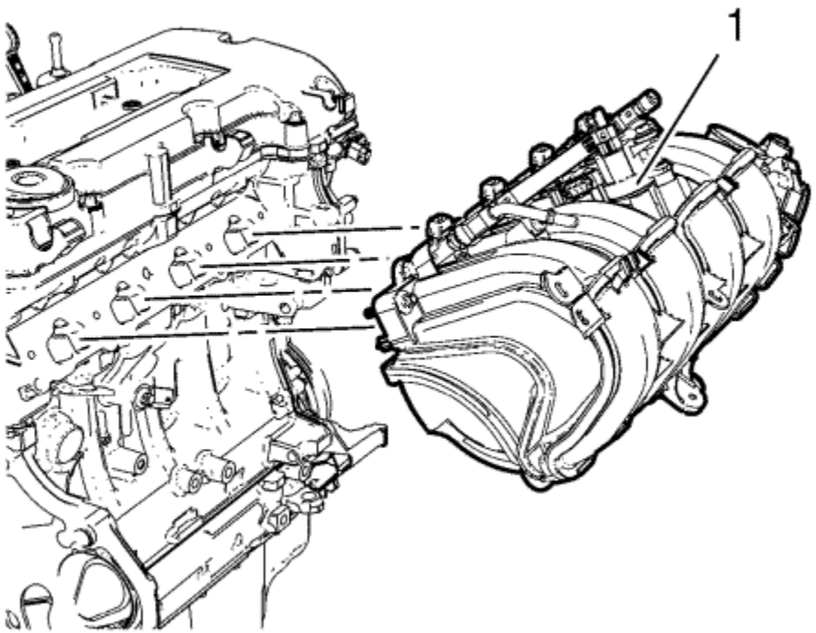

2. Install the inlet manifold (1) along with the inlet manifold gasket.

   Caution: Refer to Fastener Caution in the Preface section.

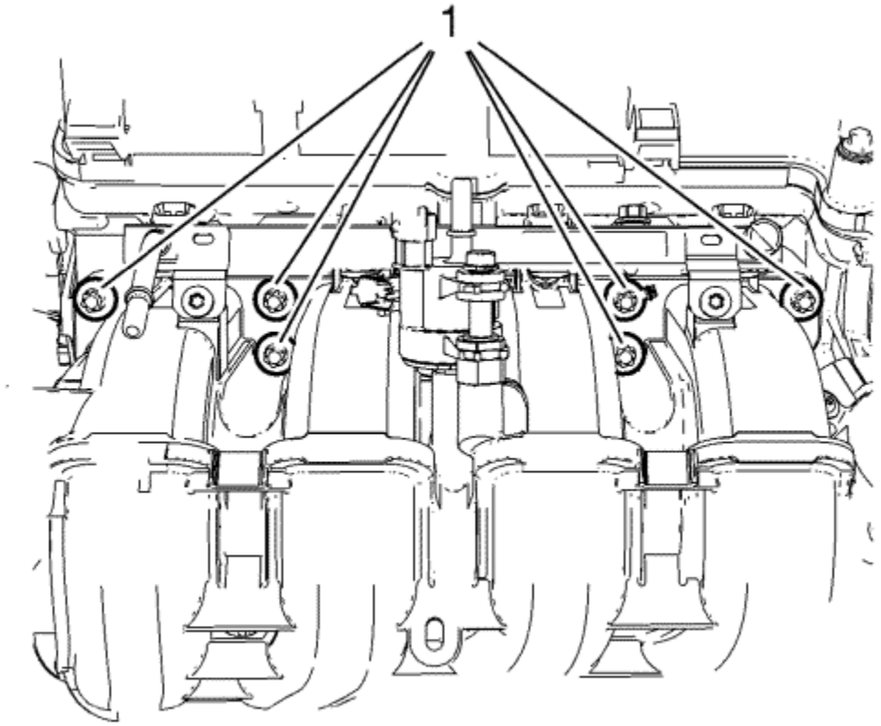

3. Install the 6 inlet manifold bolts (1) and tighten to **20 N·m (15 lb ft)**.

© Copyright Chevrolet. All rights reserved

Throttle Body Installation

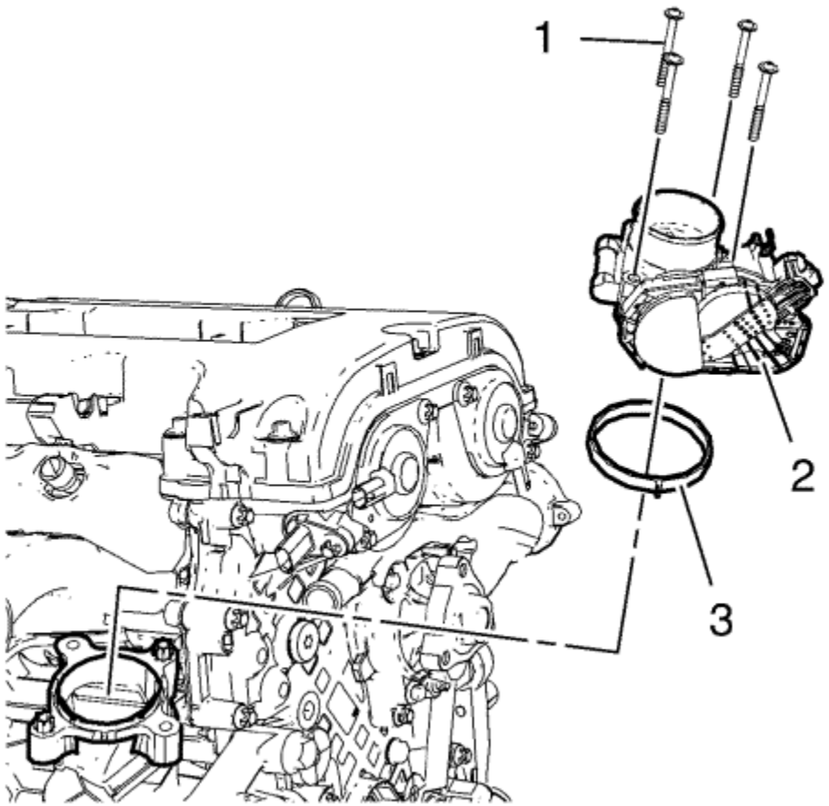

1. Install the throttle body (2) and a NEW throttle body seal ring (3)

   Caution: Refer to Fastener Caution in the Preface section.

2. Install the 4 throttle body bolts (1) and tighten to **9 N·m (80 lb in)**.

© Copyright Chevrolet. All rights reserved

Water Pump Installation

1. Clean the sealing surfaces.

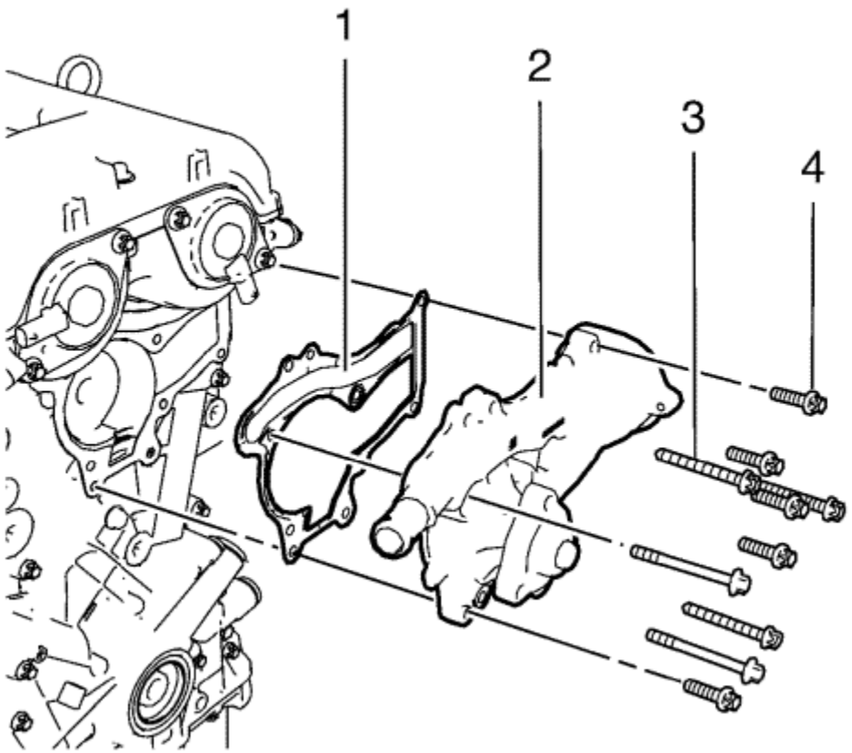

2. Install the water pump (2) and a NEW water pump gasket (1).

   Caution: Refer to Fastener Caution in the Preface section.

3. Install the 5 short water pump bolts (4) and the 5 long water pump bolts (3) and tighten in a cross sequence to **8 N·m (71 lb in)**.

© Copyright Chevrolet. All rights reserved

Crankshaft Balancer Installation

Special Tools

- *EN-49979* Crankshaft Shock Mount Retainer.
- *EN-956-1* Extension
- *EN-470-B* Angular Torque Wrench

For equivalent regional tools, refer to Special Tools .

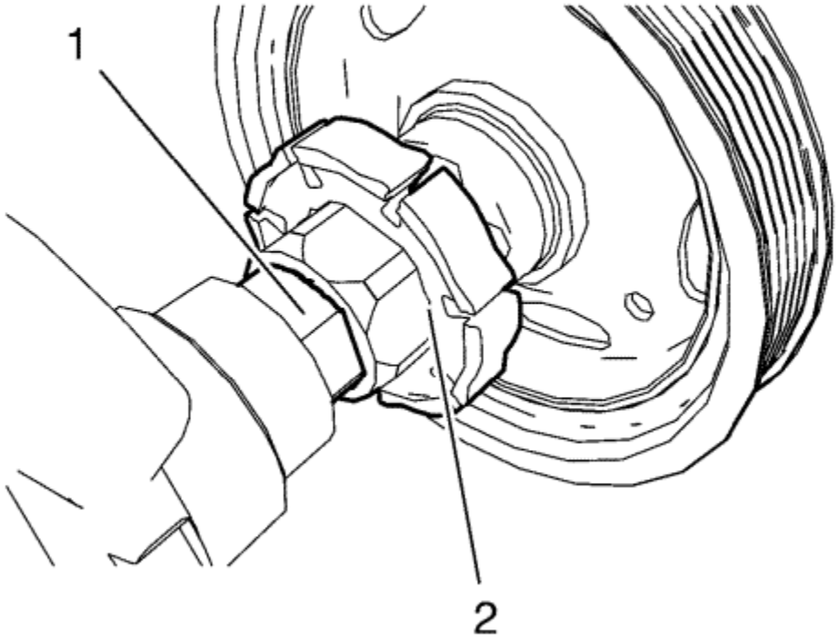

Note: The crankshaft balancer flange must fit the hexagon of the oil pump rotor (2) and to the dihedral of the crankshaft (1).

1. Install the crankshaft balancer by cautious reciprocating and pressing.

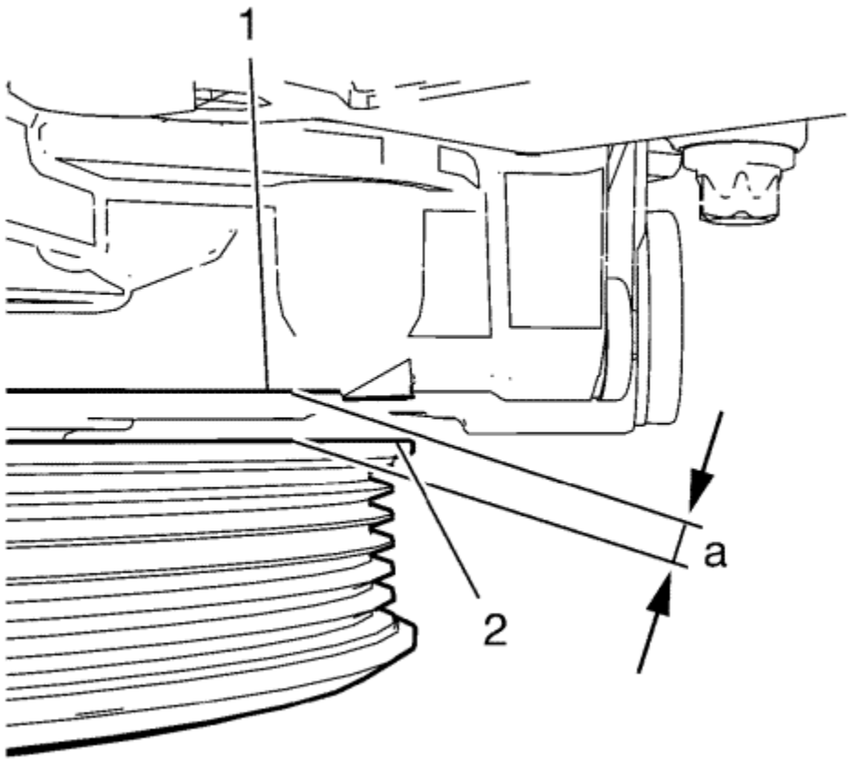

2. Measure the distance **a** between the crankshaft balancer (2) and the mark on the engine front cover (1). The distance **a** should be **4.5 mm (0.1772 in)**.
3. Install the crankshaft balancer bolt.

Caution: Refer to Fastener Caution in the Preface section.

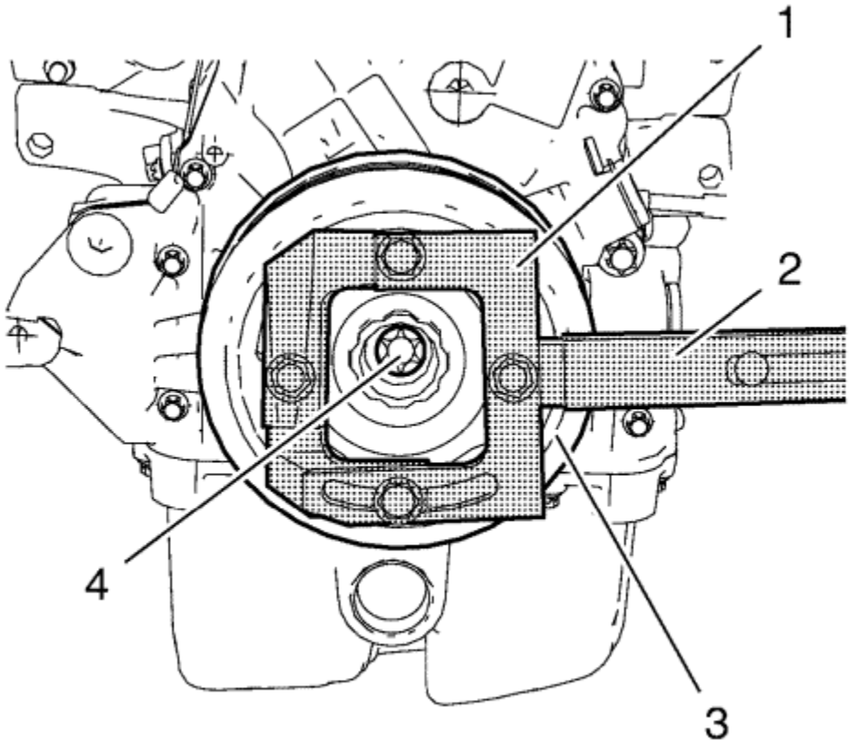

4. Tighten the crankshaft balancer bolt (4) to while fixing the crankshaft balancer (3) with *EN-49979* retainer (1) and *EN-956-1* extension (2) in the following order:
   4.1. Tighten the crankshaft balancer bolt to **150 N·m (111 lb ft)**.
   4.2. Tighten the crankshaft balancer bolt to an additional **60°**. Use *EN-470-B* wrench .

&#169© Copyright Chevrolet. All rights reserved

Water Pump Pulley Installation

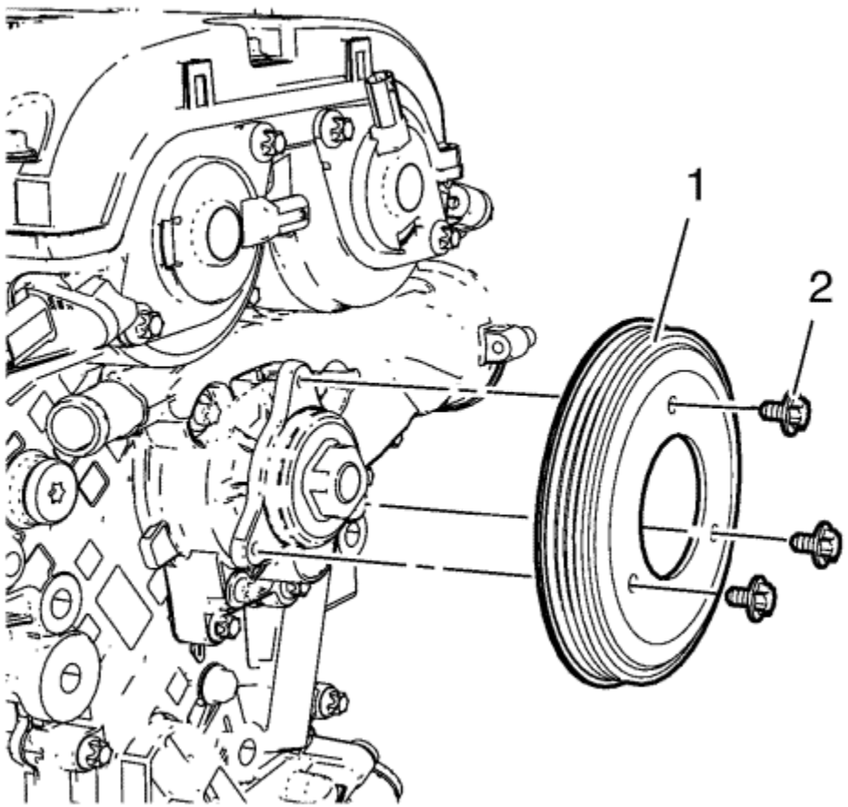

1. Install the water pump pulley (1).
2. Install the 3 water pump pulley bolts (2).

   Caution: Refer to Fastener Caution in the Preface section.

3. Tighten the 3 water pump pulley bolts (2) to **10 N·m (89 lb in)** while holding up the water pump pulley hub with a spanner.

© Copyright Chevrolet. All rights reserved

Air Conditioning Compressor Bracket Installation

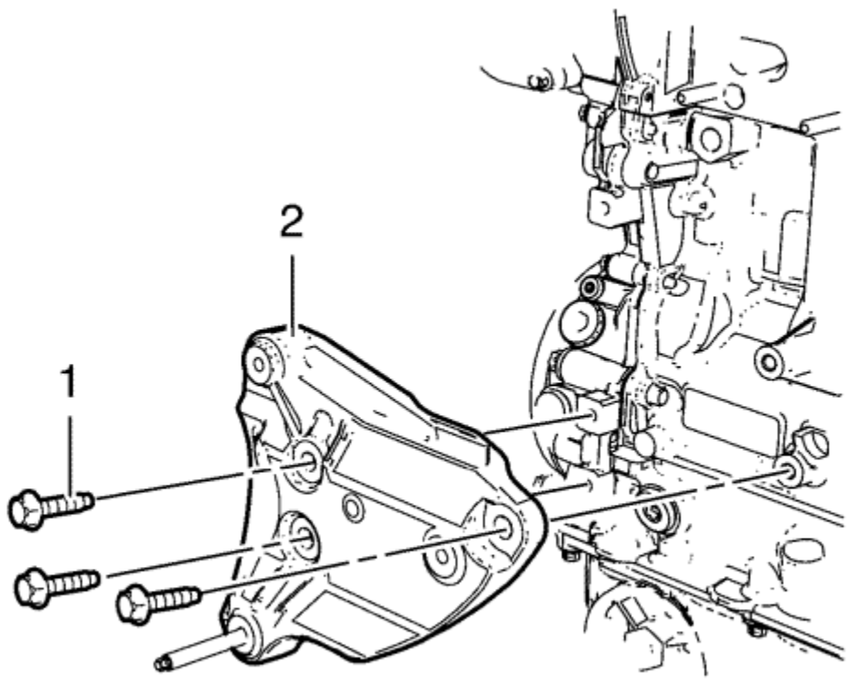

1. Install the air conditioning compressor bracket (2).

   Caution: Refer to Fastener Caution in the Preface section.

2. Install the 3 air conditioning compressor bracket bolts (1) and tighten to **22 N·m (16 lb ft)**.

© Copyright Chevrolet. All rights reserved

Water Pump Belt Installation

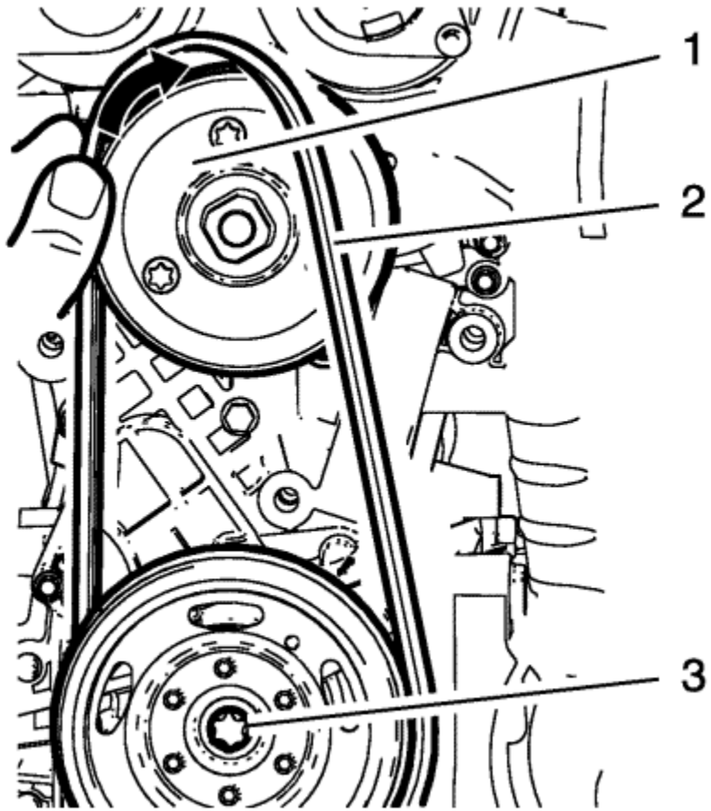

1. Pre-install the water pump belt (2) to the crankshaft balancer.
2. Guide the water pump belt (2) over the water pump pulley (1) and push it with the thumb in the water pump pulley groove.
3. Slowly rotate the crankshaft by means of the crankshaft balancer bolt (3) to install the water pump belt while pushing the belt in the water pump pulley groove.
4. Rotate the crankshaft and check proper seat of the water pump belt in the grooves of the water pump pulley and the crankshaft balancer.

© Copyright Chevrolet. All rights reserved

Water Outlet Installation

1. Clean the sealing surfaces.

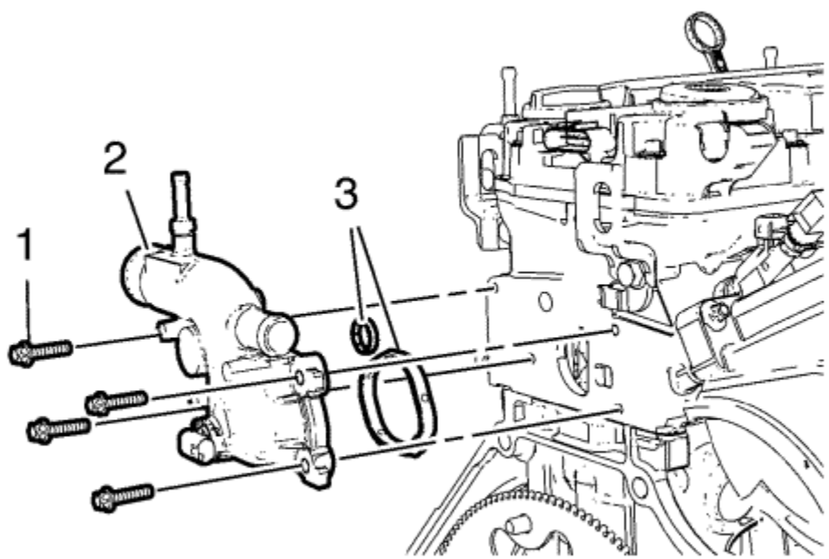

2. Install the water outlet (2) and 2 NEW water outlet seal rings (3).

   Caution: Refer to Fastener Caution in the Preface section.

3. Install the 4 water outlet bolts (1) and tighten to **8 N·m (71 lb in)**.

© Copyright Chevrolet. All rights reserved

Engine Coolant Thermostat Housing Installation

1. Clean the sealing surfaces.

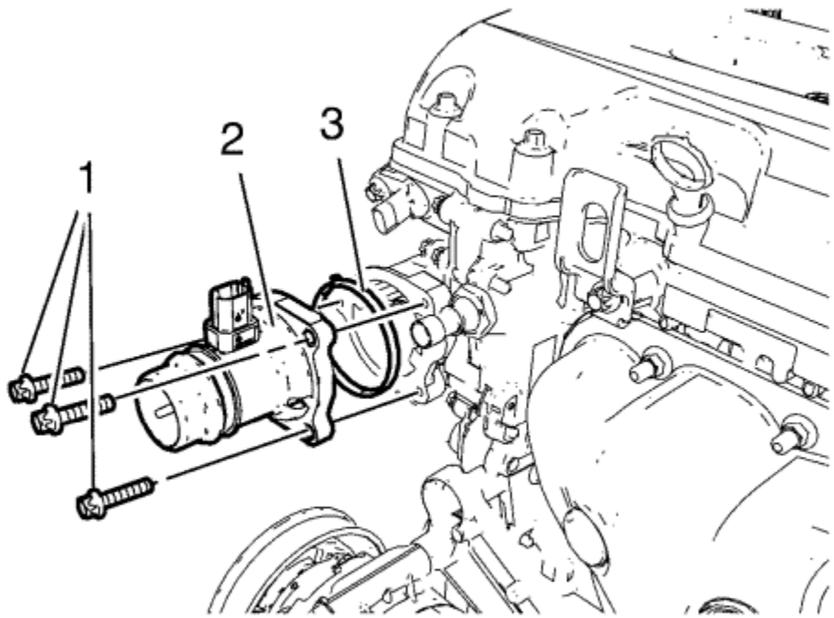

2. Install the engine coolant thermostat housing (2) and a NEW engine coolant thermostat housing seal ring (3).

   Caution: Refer to Fastener Caution in the Preface section.

3. Install the 3 engine coolant thermostat housing bolts (1) and tighten to **8 N·m (71 lb in)**.

© Copyright Chevrolet. All rights reserved

Exhaust Manifold Installation

1. Clean the exhaust manifold and the cylinder head sealing surfaces from old gasket material.

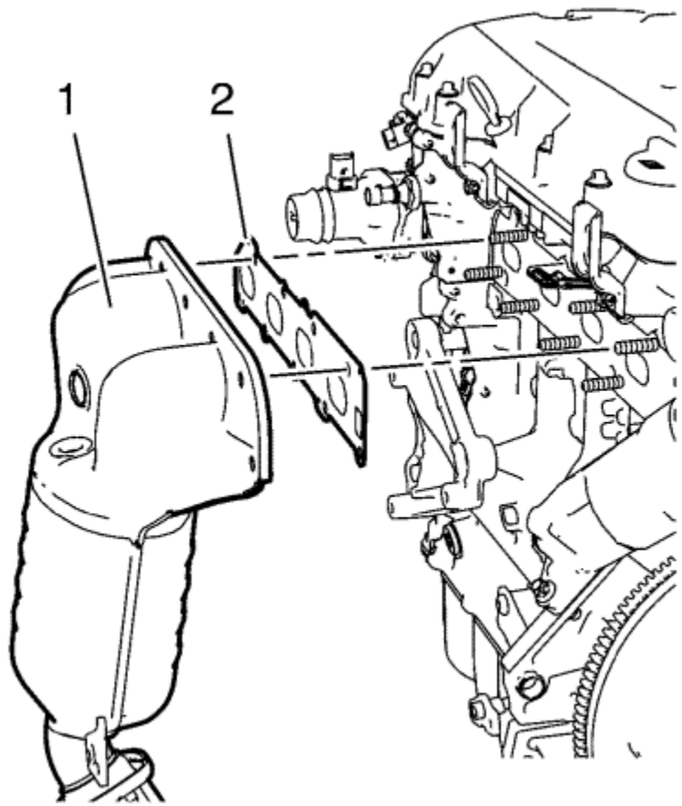

2. Install a NEW exhaust manifold gasket (2).
3. Install the exhaust manifold (1).

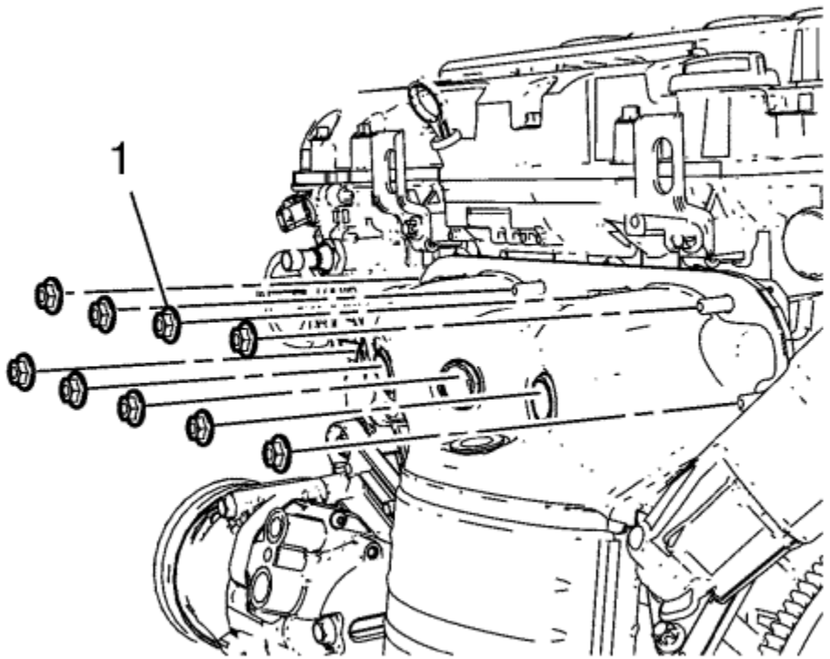

4. Install the 9 exhaust manifold nuts (1) and hand-tighten.

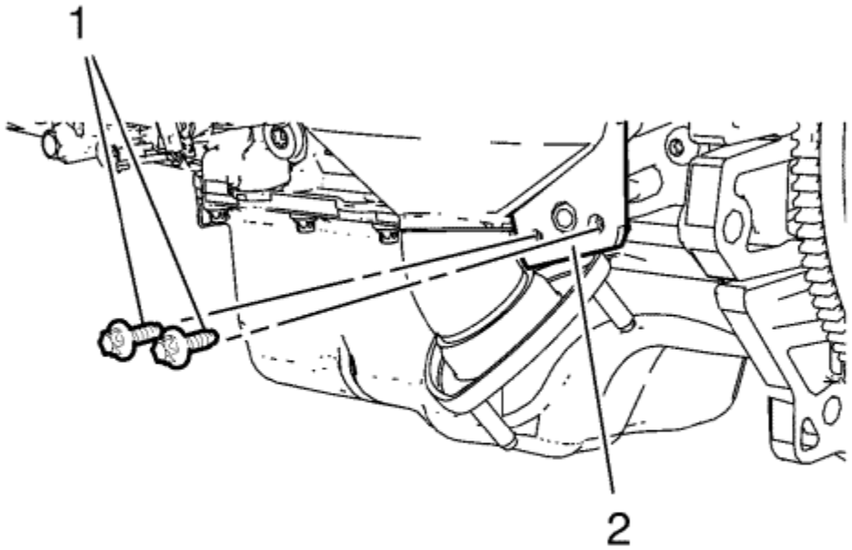

5. Install the 2 catalytic converter bracket bolts (1) to the catalytic converter bracket (2).

   Caution: Refer to Fastener Caution in the Preface section.

6. Tighten the 9 exhaust manifold nuts to **22 N·m (16 lb ft)**.
7. Tighten the 2 catalytic converter bracket bolts to **10 N·m (89 lb in)**.

© Copyright Chevrolet. All rights reserved

Engine Lift Bracket Installation

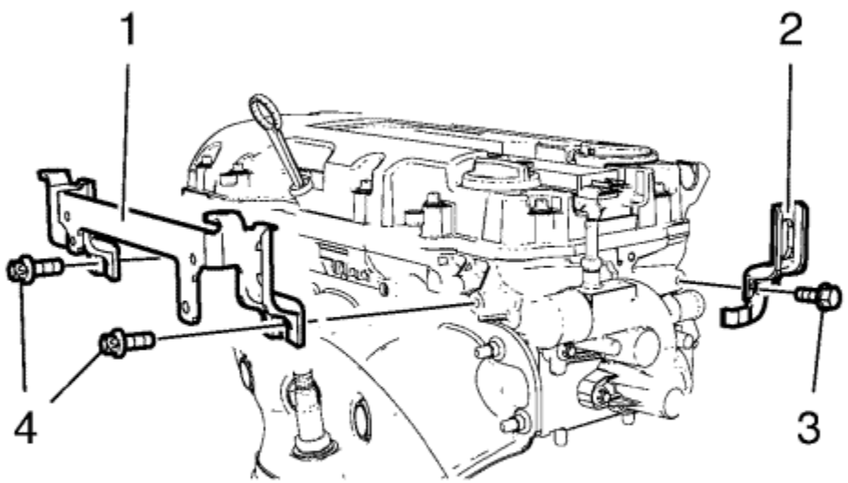

1. Install the engine lift bracket (1).

   Caution: Refer to Fastener Caution in the Preface section.

2. Install the 2 engine lift bracket bolts (4) and tighten to **22 N·m (16 lb ft)**.
3. Install the sidewise engine lift bracket (2).
4. Install the sidewise engine lift bracket bolt (3) and tighten to **22 N·m (16 lb ft)**.

© Copyright Chevrolet. All rights reserved

Engine Mount Bracket Installation

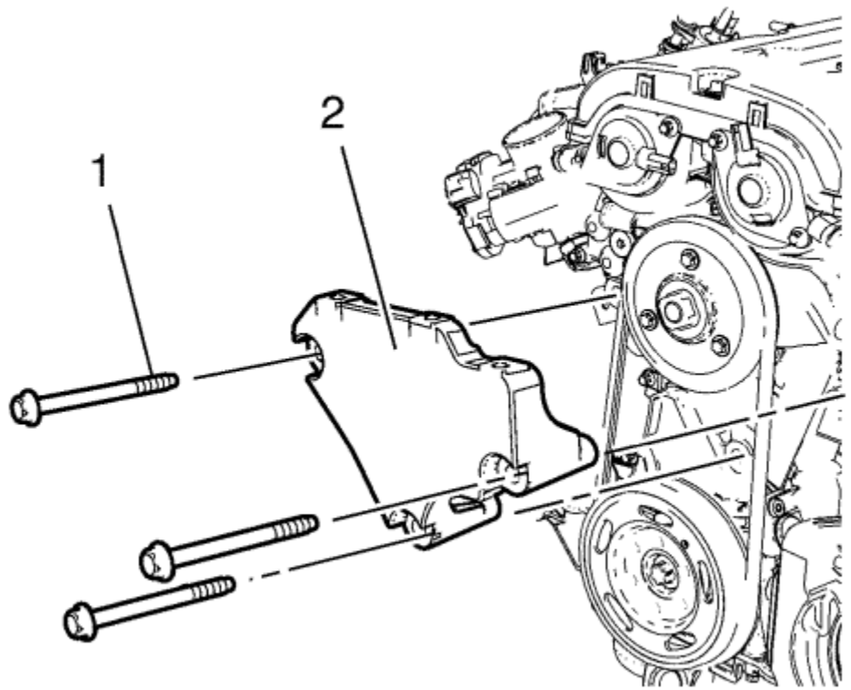

1. Install the engine mount bracket (2).

   Caution: Refer to Fastener Caution in the Preface section.

   Caution: Refer to Torque-to-Yield Fastener Caution in the Preface section.

2. Install the 3 engine mount bracket bolts and tighten to **60 N·m (44 lb ft) + 45-60°**.

© Copyright Chevrolet. All rights reserved

Engine Front Cover and Oil Pump Assemble

Oil Pump Installation

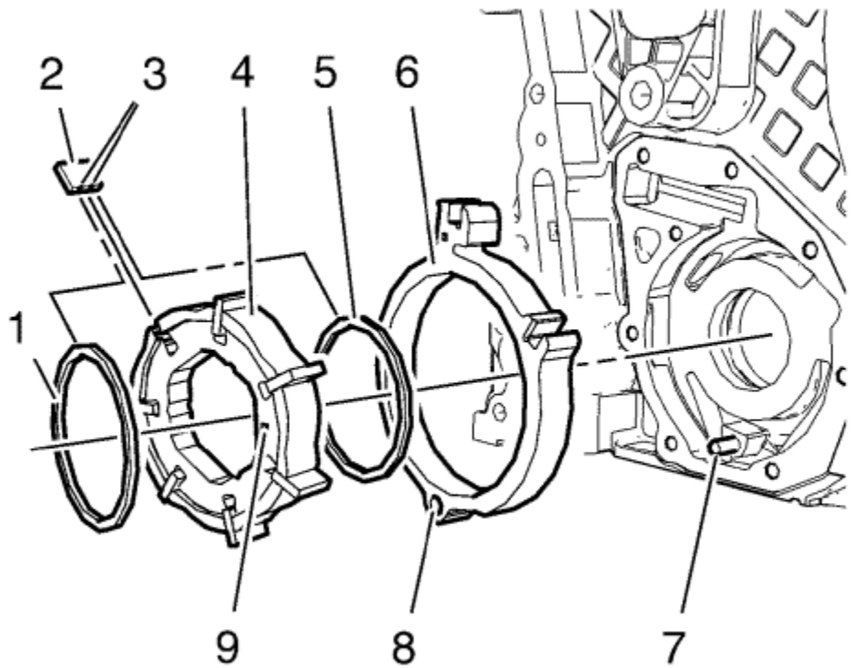

Note: Oil pump slide spring pin and oil pump slide spring, as well as slide seal and slide seal spring can be ordered as single parts. All other oil pump components can only be ordered as a replacement kit.

1. Install the oil pump components in the following order:

Note: The bore (8) in the oil pump slide must fit smooth-running and without clearance to the oil pump slide pivot pin (7)

1.1. Install the oil pump slide (6).
1.2. Install the inner oil pump vane ring (5).

Note: Mind the installation position of the oil pump vane rotor (4). The mark (9) must point in the direction of the oil pump cover.

1.3. Install the oil pump vane rotor (4).

Note: Mind the localised flattings (3) on the oil pump vanes (2) caused by the oil pump vane rings. The localised flattings must point to the oil pump vane rotor.

1.4. Install the 6 oil pump vanes (2).
1.5. Install the outer oil pump vane ring (1).

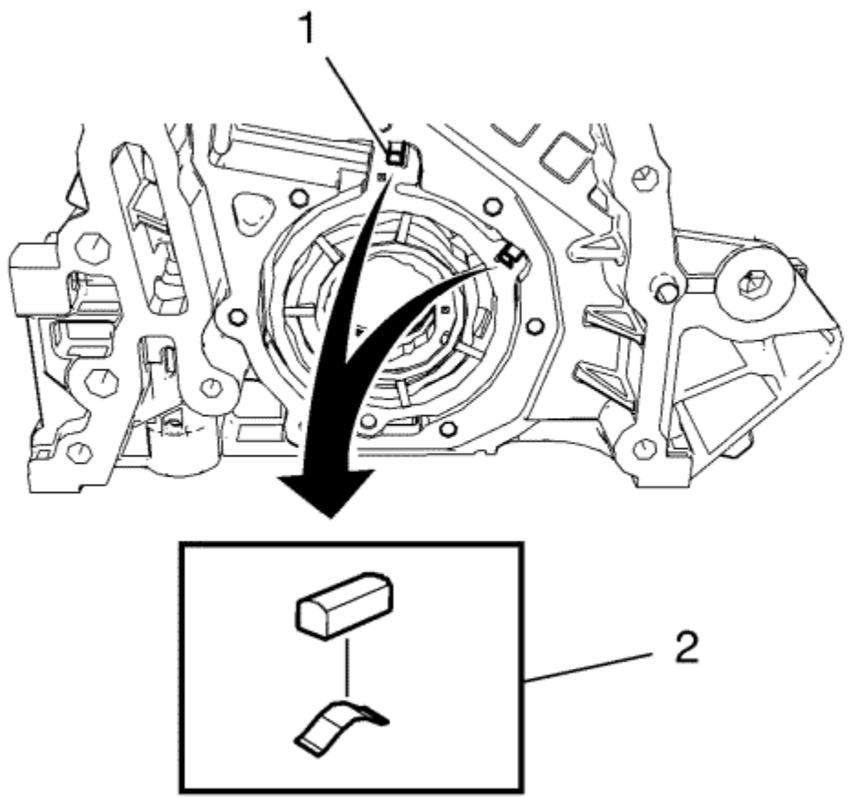

2. Install the 2 oil pump slide seals and the 2 oil pump slide seal springs (2) in the position as shown to the 2 grooves (1) of the oil pump slide.

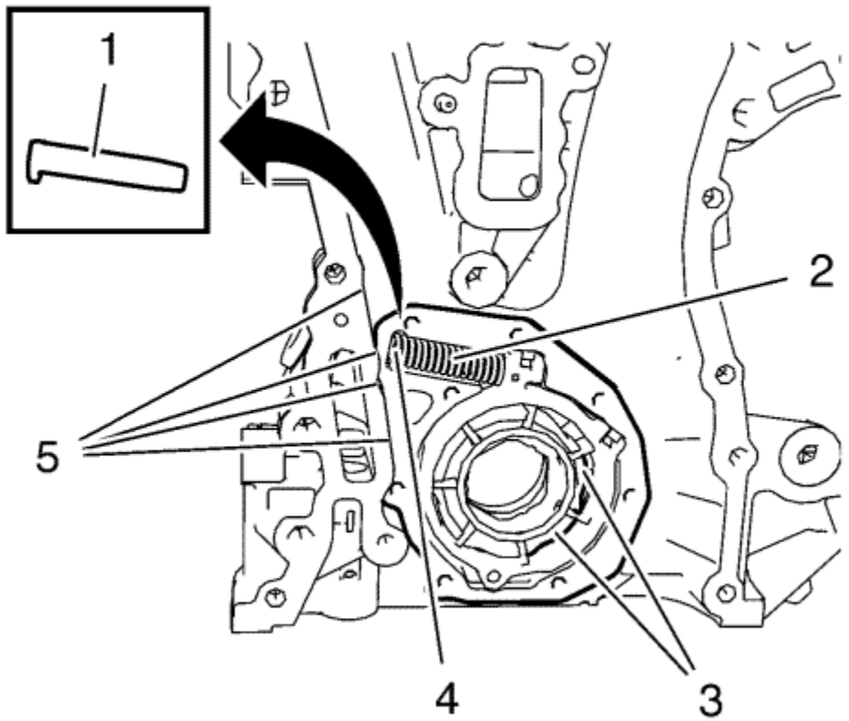

3. Protect the engine front cover edge (5) with a suitable piece of plastic.

   Note: The length of the removed oil pump slide spring (2) should be **76.5 mm (3.0118 in)**.

4. Install the oil pump slide spring pin along with the oil pump slide spring (4). Use a screwdriver to compress the oil pump slide spring. The flat side of oil pump slide spring pin must face upwards.
5. Measure the oil pump clearances to ensure a correct installation of the oil pump components. Refer to Engine Front Cover and Oil Pump Cleaning and Inspection .
6. Lubricate the oil pump vanes, the oil pump vane rotor, the oil pump slide spring and the area (3) with engine oil.
7. Inspect the oil pump slide spring mechanism for practicability.

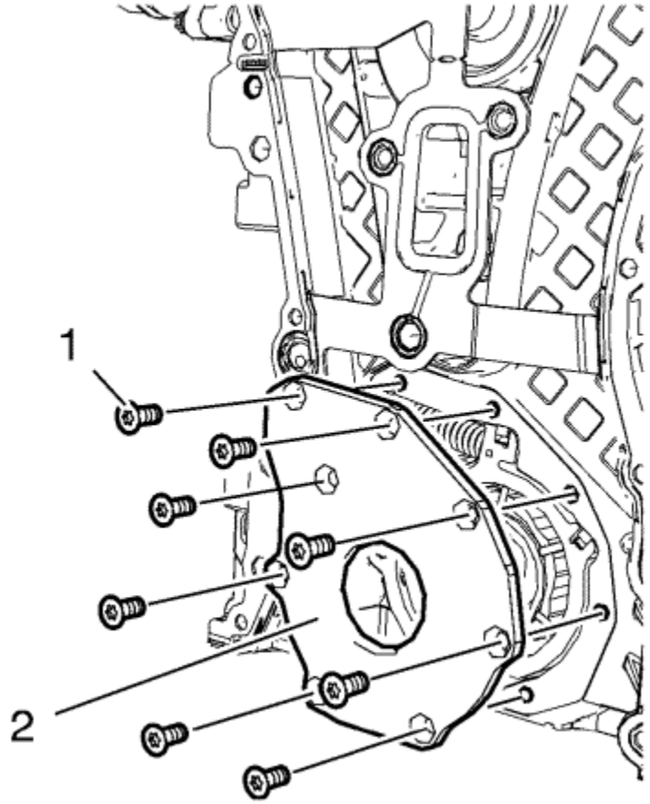

8. Install the oil pump cover (2) and the 8 oil pump cover bolts (1).

   Caution: Refer to Fastener Caution in the Preface section.

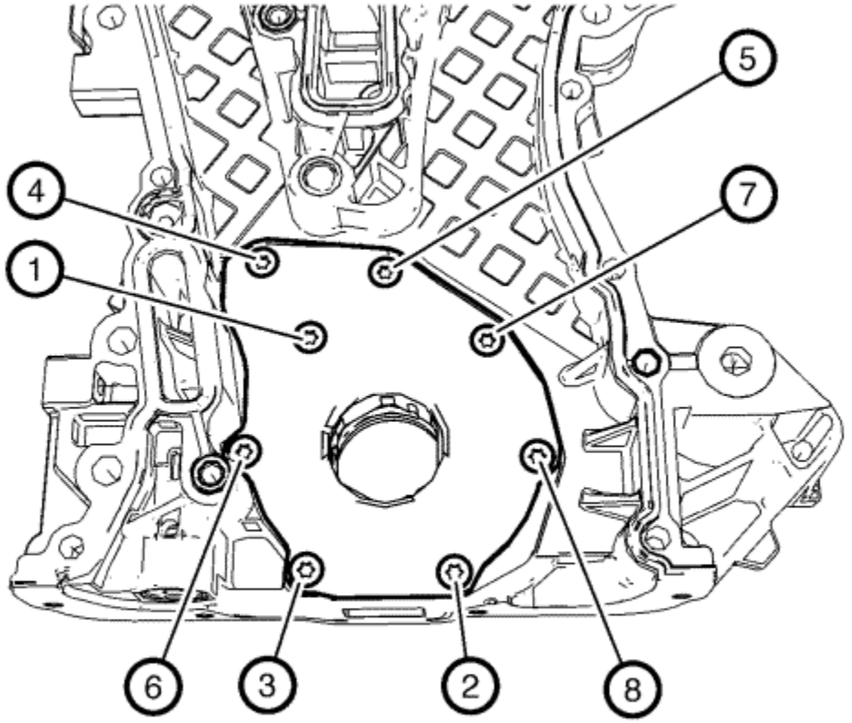

9. Tighten the oil pump cover bolts in a sequence as shown to **8 N·m (71 lb in)**.

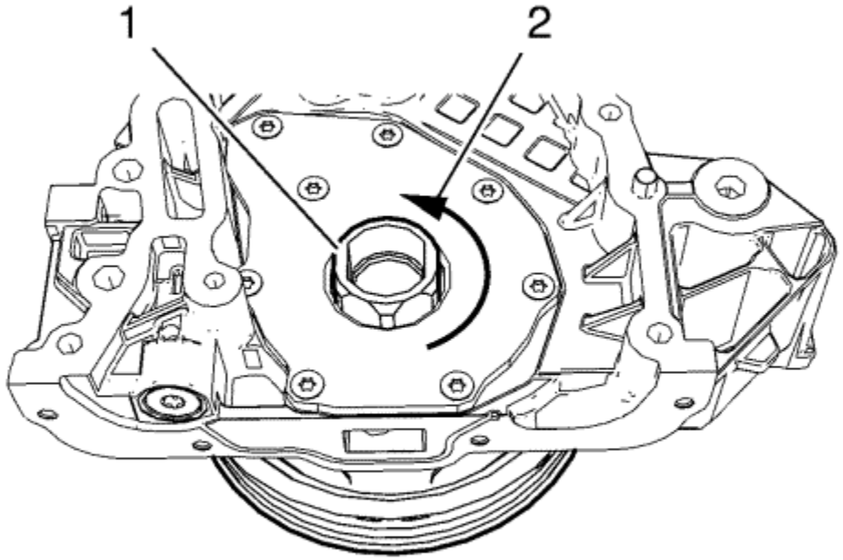

10. Install the crankshaft balancer (1) and rotate in shown direction (2) in order to inspect the function of the oil pump mechanism. Crankshaft balancer should be rotated easily.

Engine Front Cover Assemble

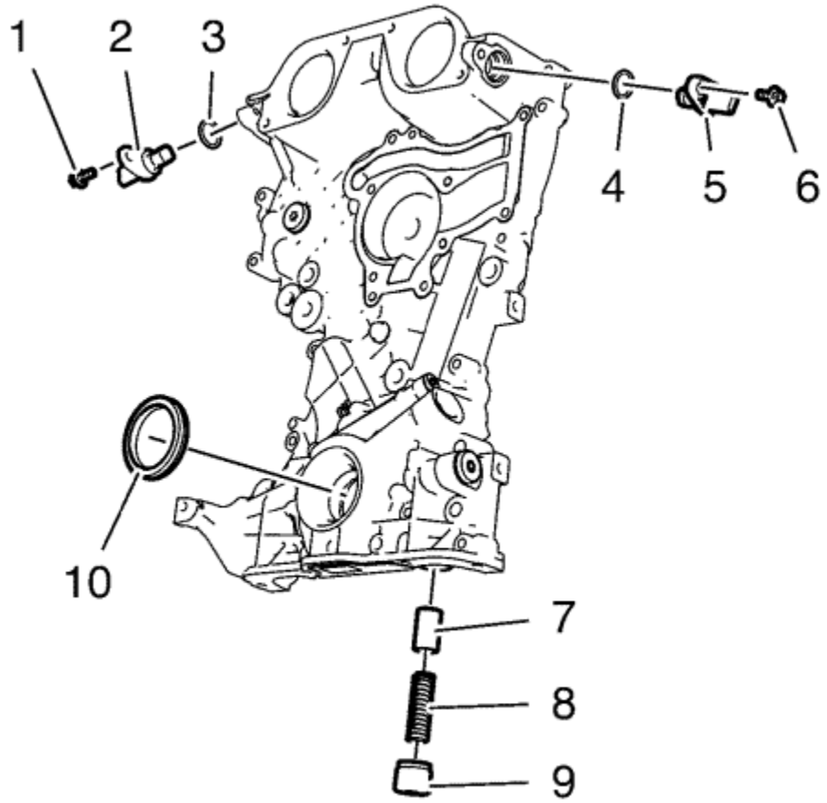

1. Install the crankshaft front oil seal (10).
2. Install the oil pressure relief valve (7), (8) and (9) and tighten to **50 N·m (37 lb ft)**.
3. Install the exhaust camshaft position sensor (5) and the seal ring (4).
4. Install the exhaust camshaft sensor bolt (6) and tighten to **6 N·m (53 lb in)**.
5. Install the intake camshaft position sensor (2) and the seal ring (3).
6. Install the intake camshaft sensor bolt (1) and tighten to **6 N·m (53 lb in)**.

© Copyright Chevrolet. All rights reserved

Water Pump Belt Removal

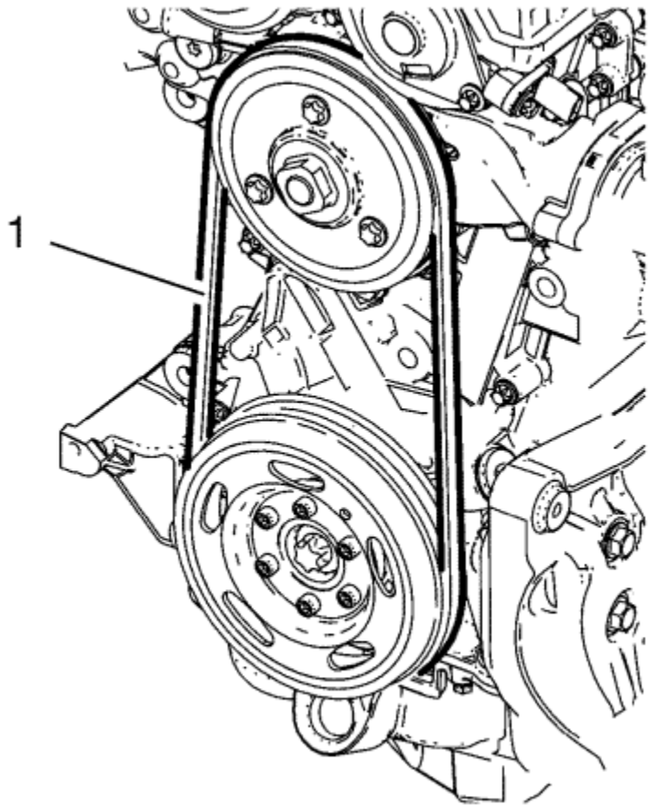

1. Cut the water pump belt (1) with a suitable cutting tool.
2. Remove the water pump belt.

© Copyright Chevrolet. All rights reserved

Automatic Transmission Flex Plate Removal

Special Tools

- *EN-49979* Crankshaft Shock Mount Retainer.
- *EN-956-1* Extension .

For equivalent regional tools, refer to Special Tools .

1. Install *EN-49979* retainer to *EN-956-1* extension .

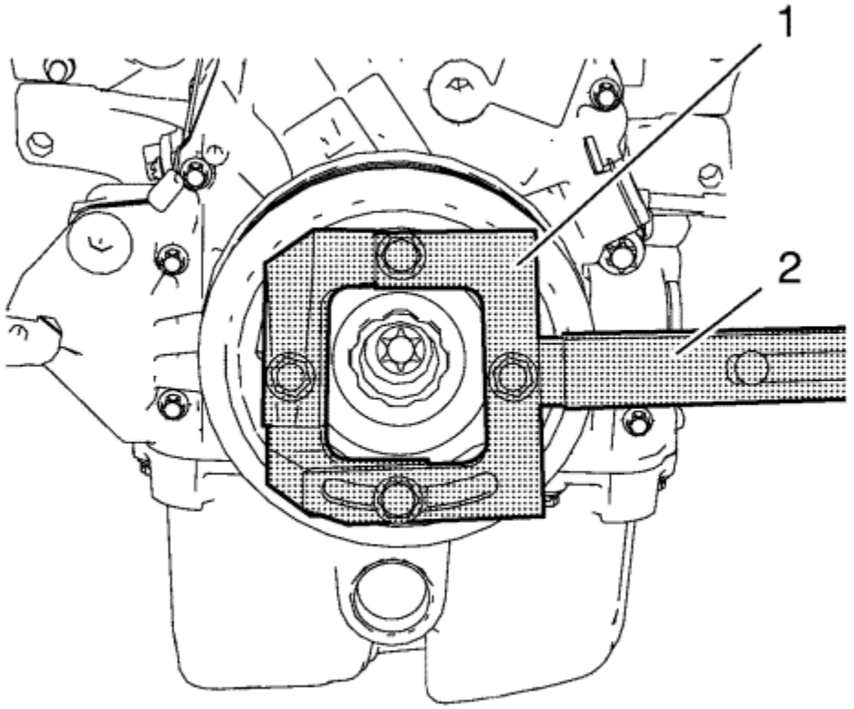

2. Install *EN-49979* retainer (1) in compound with *EN-956-1* extension (2) to the crankshaft balancer as shown.

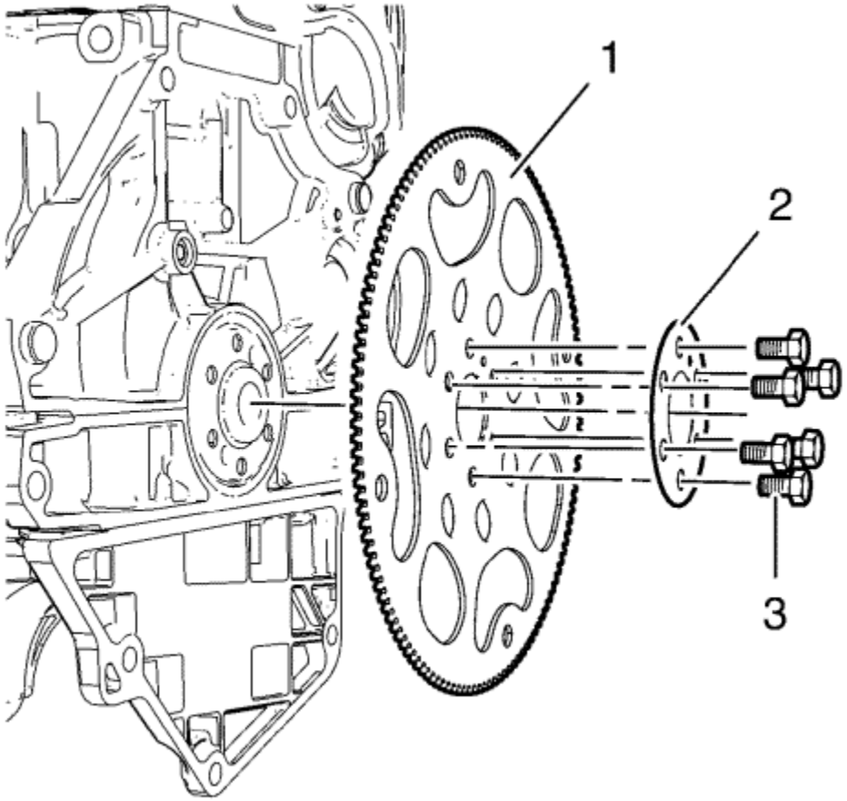

3. Loosen the 6 flex plate bolts (3) while holding up the crankshaft balancer.
4. Remove the 6 flex plate bolts and the flex plate bolt washer (2).
5. Remove the flex plate (1).

&#169© Copyright Chevrolet. All rights reserved

Engine Block Cleaning and Inspection

Special Tools

EN-8087 Cylinder Bore Gauge

For equivalent regional tool, refer to Special Tools .

Cleaning Procedure

1. Remove any old thread sealant, gasket material or sealant.
2. Clean all the following areas with solvent:
   - Sealing surfaces
   - Cooling passages
   - Oil passages
3. Clean all threaded and through holes with solvent.

   Warning: Wear safety glasses when using compressed air in order to prevent eye injury.

4. Dry the engine block with compressed air.

Visual Inspection

1. Inspect the crankshaft bearings journals for damage or spun bearings. The crankshaft bearing journals are not repairable, if the crankshaft bearing journals are damaged the engine block assembly must be replaced.
2. Inspect all sealing and mating surfaces for damage, repair or replace the engine block assembly if necessary.
3. Inspect all threaded and through holes for damage or excessive debris.
4. Inspect all bolts for damage, if damaged replace with NEW bolts only.
5. Inspect the cylinder walls for cracks or damage. The cylinder sleeves are not serviced separately, if the cylinders are damaged the cylinder block assembly must be replaced.
6. Inspect the engine block for cracks. Do not repair any cracks. If cracks are found, the cylinder block assembly must be replaced.

Measuring Procedure

Engine Block Flatness Inspection

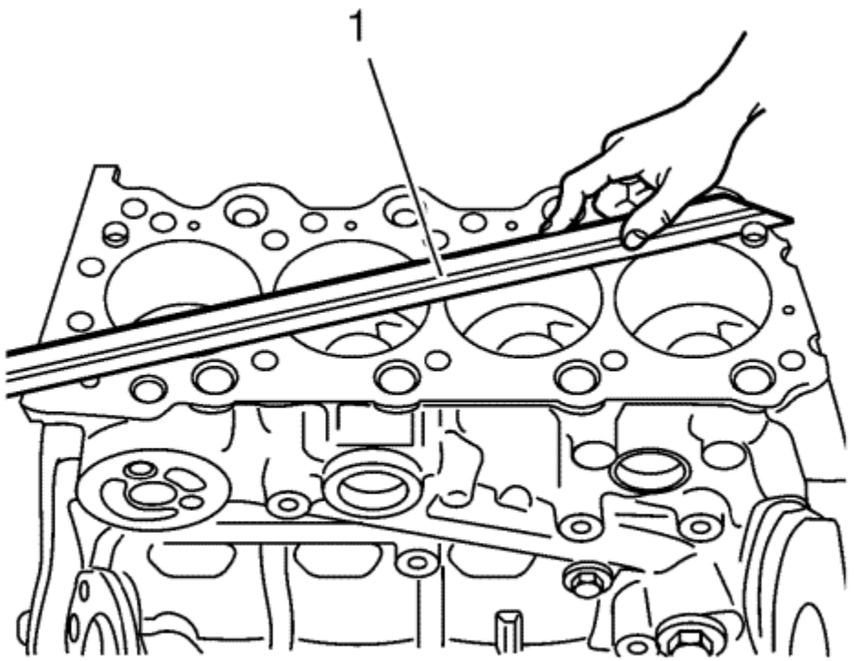

1. Inspect the engine block as shown for distortion. Use a straightedge (1).

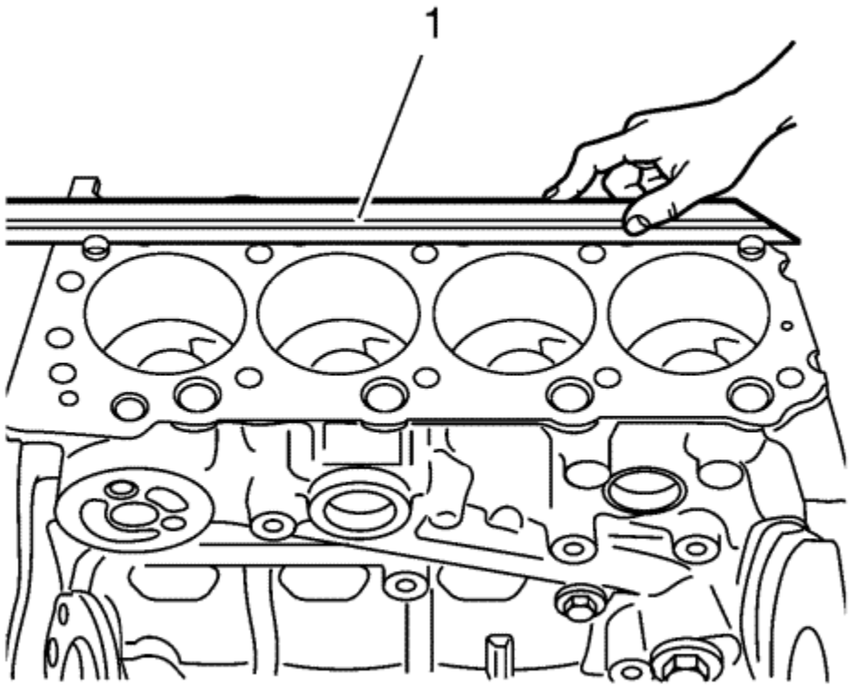

2. Inspect the engine block as shown for deflection. Use a straightedge (1).

Cylinder bore and crankshaft bearing bore

Note: Old bolts can be used for the measuring procedure.

1. Install the crankshaft bearing cap tie plate and tighten.

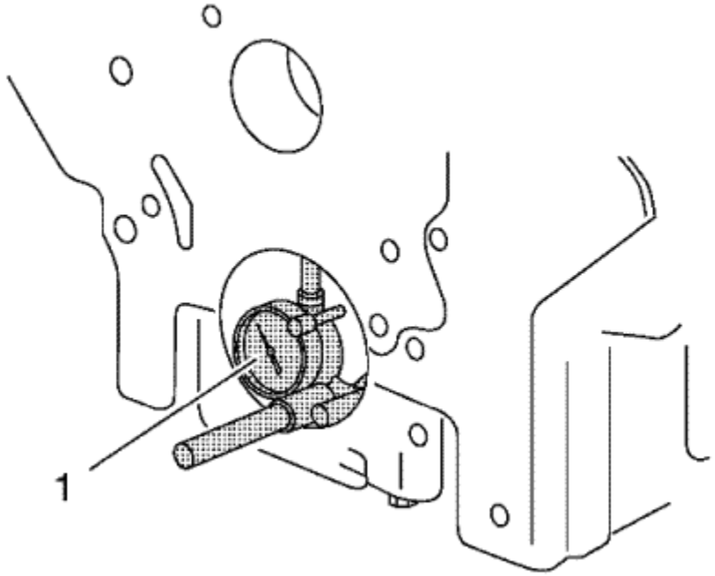

2. Inspect the crankshaft main bearing bores. Use the *EN-8087* gauge (1) to measure the bearing bore concentricity and alignment. Refer to Engine Mechanical Specifications to find the permitted values.
3. Replace the engine block and crankshaft bearing cap tie plate if the crankshaft bearing bores are out of specification.

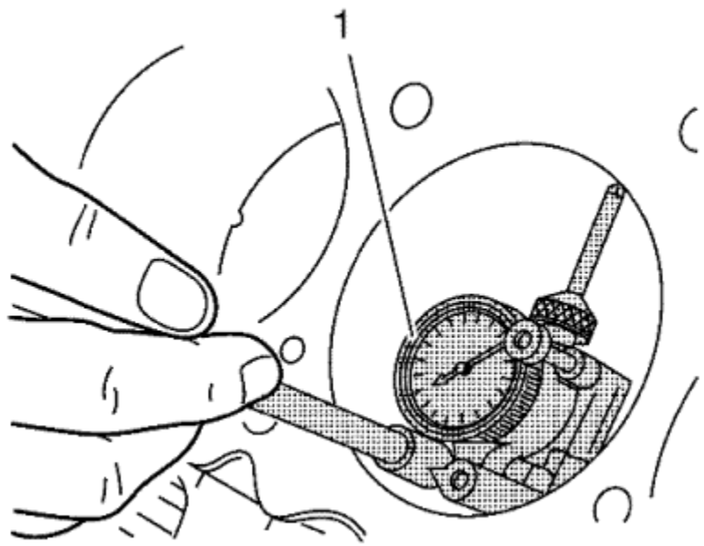

4. Inspect the cylinder bores using the *EN-8087* gauge (1). Inspect for the following items:

- Wear
- Taper
- Runout
- Ridging

5. Refer to Engine Mechanical Specifications to find the permitted values.
6. If the cylinder bores are out of specification, replace the engine block.
7. Remove the crankshaft bearing cap tie plate.

&#169© Copyright Chevrolet. All rights reserved

Automatic Transmission Flex Plate Installation

Special Tools

- *EN-49979* Crankshaft Shock Mount Retainer.
- *EN-956-1* Extension .
- *EN-470-B* Angular Torque Wrench .

For equivalent regional tools, refer to Special Tools .

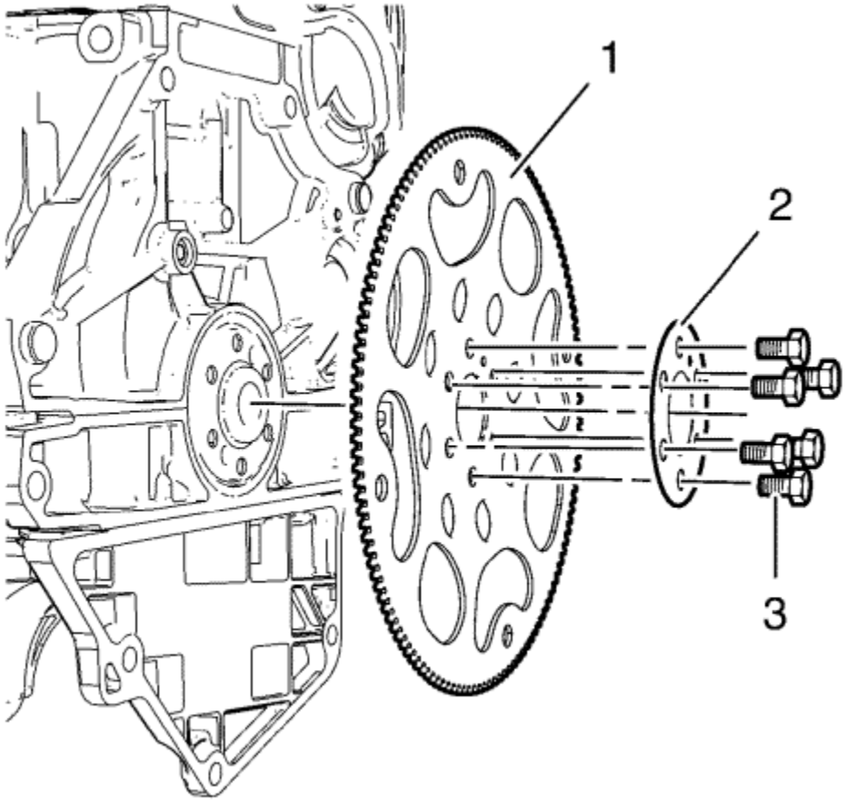

1. Install the flex plate (1).
2. Install the flex plate bolt washer (2) and the 6 flex plate bolts (3).
3. Install *EN-49979* retainer to *EN-956-1* extension .

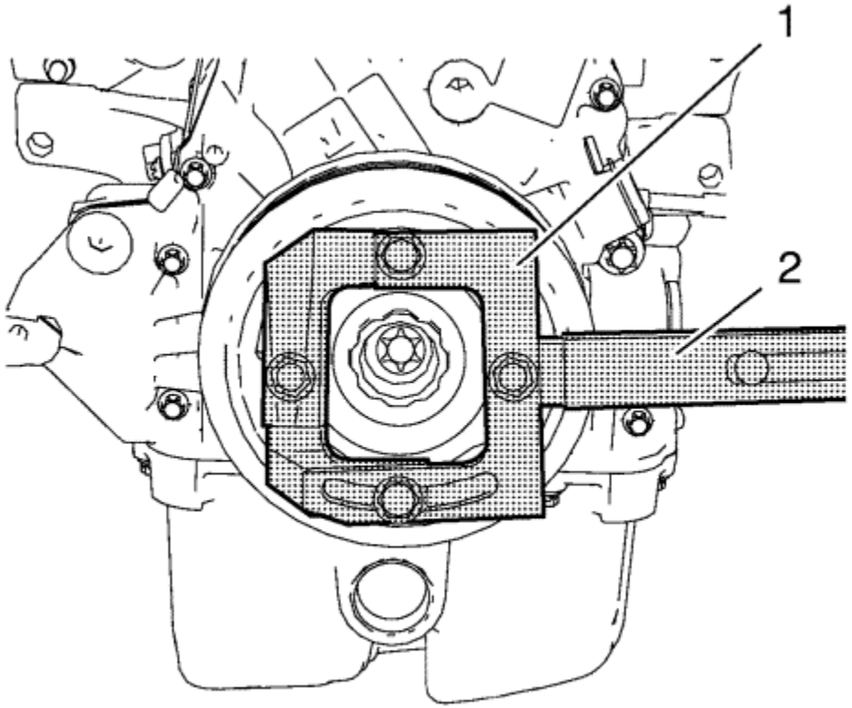

4. Install *EN-49979* retainer (1) in compound with *EN-956-1* extension (2) to the crankshaft balancer as shown.

   Caution: Refer to Fastener Caution in the Preface section.

5. Tighten the 6 flex plate bolts to **35 N·m (26 lb ft)**.
6. Tighten the 6 flex plate bolts to an additional **30°**. Use *EN-470-B* wrench .
7. Tighten the 6 flex plate bolts to an additional **15°**. Use *EN-470-B* wrench .

&#169© Copyright Chevrolet. All rights reserved

Engine Component Description

Cylinder Block

The cylinder block is a hollow frame structured in-line 4 cylinder. The block has 5 crankshaft bearings with the thrust bearing located on the third bearing from the front of the engine.

Crankshaft

The crankshaft is a steel crankshaft. It is supported in 5 main journals with main bearings which have oil clearance for lubrication. The 3rd bearing which controls the proper axial end play of the crankshaft.

Oil Pump

The engine is equipped with a variable oil pump. The oil pump is integrated into the engine front cover and provides different oil pressure values depending on the engine speed.

Sump

The sump is a structural aluminium sump with transmission attachment points. The oil suction gallery for the oil pump is integrated into the sump.

Piston and Connecting Rod

The pistons are aluminium pistons. The connecting rods are made of fractured steel. The piston pin is floating in piston bore and shrinked in connecting rod.

Cylinder Head

This cylinder head is a double over head camshaft (DOHC) type and has 2 camshafts that open 4 valves per cylinder with hydraulic valve clearance adjusters and hydraulic valve clearance adjuster arms. The cylinder head is made of cast aluminum alloy for strength and hardness whole remaining light weight. The combustion chamber of the cylinder head is designed for increasing of squish and swirl efficiency to help maximise petrol combustion efficiency.

Camshaft Drive with Variable Camshaft Timing

A timing chain is used for camshaft drive. There is a tensioner to control the tension of the chain. The engine is equipped with a variable camshaft timing system. The

camshaft adjuster will readjust itself depending on the engine speed. The valve timing readjusts to reduce fuel consumption and provides optimal power and torque. The variable camshaft timing makes an exhaust gas recirculation unnecessary.

Inlet Manifold

The inlet manifold provides the air flow passage to the combustion chambers through the throttle body. The inlet manifold along with the throttle body have an effect on engine torque, power, noise, driveability, emission, fuel economy and performance. The inlet manifold is made of plastic for better strength while maintaining light weight.

Exhaust Manifold

The exhaust manifold is located to the cylinder head and channels the exhaust gas out of the combustion chamber. It is designed to endure on high pressure and high temperature. The exhaust manifold includes the catalytic converter.

© Copyright Chevrolet. All rights reserved

Lubrication Description

[General Lubrication Description]

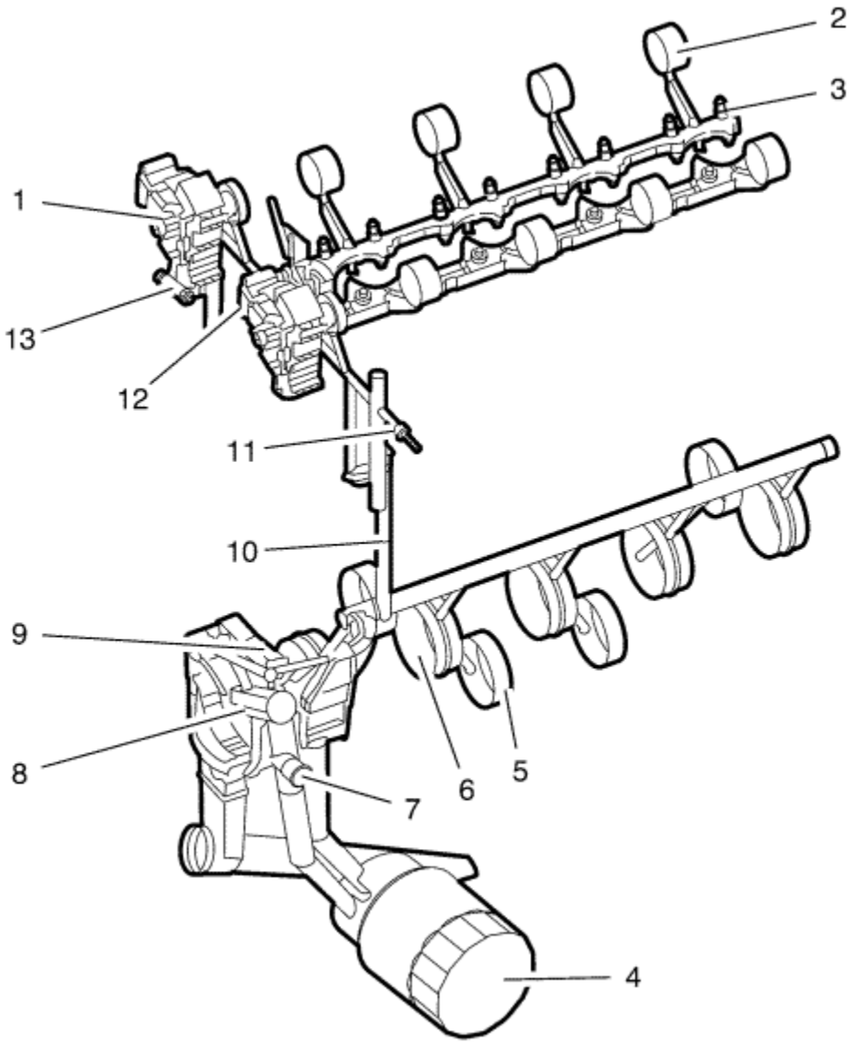

Oil is applied under pressure to the crankshaft bearings (6), connecting rod bearings (5), camshaft bearings (2) and hydraulic clearance adjusters (3). In addition, the variable oil pump (8), variable camshaft phaser (1), and hydraulic chain tensioner (13) are supplied with pressurised oil. Oil is sucked from the oil sump through the fixed screen into the variable vane type oil pump. The pump is integrated in the front cover and directly driven by the crankshaft. Also integrated into the front cover is a pressure relieve valve (7) that opens when the oil pressure is too high at a cold start. When that valve is open some oil flows directly into the oil sump. Normally the pressurised oil passes into the engine oil gallery leading to the oil filter (4). The oil is cleaned by passing the filter from the outer to the inner side of the filter. Then the oil flows into the main oil gallery. A filter by-pass valve in the oil filter ensures continuous oil flow in case the oil filter should be restricted by more than 1.7 bar. From the oil filter the oil is distributed to the

crankshaft bearings, oil pump displacement control chamber (9) and cylinder head feed (10). The connecting rod bearings are supplied by oil flow passages through the crankshaft connecting the main journals to the rod journals. A groove around each upper main bearing furnishes oil to the drilled crankshaft passages. In the cylinder head the oil is distributed to the variable camshaft phasers, chain tensioner, oil pressure switch (11) and through the restrictor orifice (12) into the camshaft feed oil gallery. From there the hydraulic tappets and camshaft bearings are supplied with oil.

Variable Oil Pump Description

The engine is equipped with a variable displacement vane oil pump. It is indirectly regulated by the oil pressure out of the main oil gallery. The purpose of this indirect regulation is to keep a defined maximum pressure in the main oil gallery independently of the individual pressure drop between the pump outlet and the main gallery inlet and the individual oil flow to the consumers (bearing clearances differ, wear differs, [mldr]) The purpose of the variable displacement is to reduce the power consumption of the pump to reduce the overall fuel consumption of the engine. The oil flow of a static displacement oil pump is linear to the speed of the pump. This would lead to a too high oil pressure after a certain engine speed (approx. 1000 rpm at cold oil temperature, approx. 3000 rpm at hot oil temperatures). To reduce that high oil pressure, normal pumps have a relieve valve: a portion of the pressurised, already pumped oil is fed back to the intake of the pump. This is waste of power. The oil flow of a Variable Displacement Vane Pump (VDVP) as used in Fam 0 Gen 3 is linear to the speed and to the eccentricity of the rotor to the slide. The slide is movable, so it is possible to reduce the oil flow for a given speed by reducing the eccentricity. With a lower flow the oil pressure is reduced; pump oil flow now equals engine oil flow.

© Copyright Chevrolet. All rights reserved

Special Tools

Illustration	Tool Number / Description
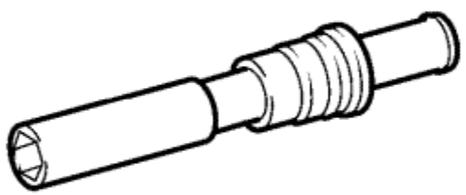	EN-194-E KM-194-E Spark Plug Key
	EN-470-B KM-470-B J-45059 Angular Torque Wrench

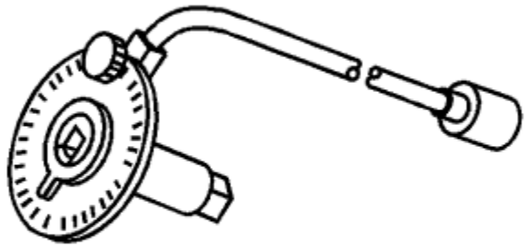	
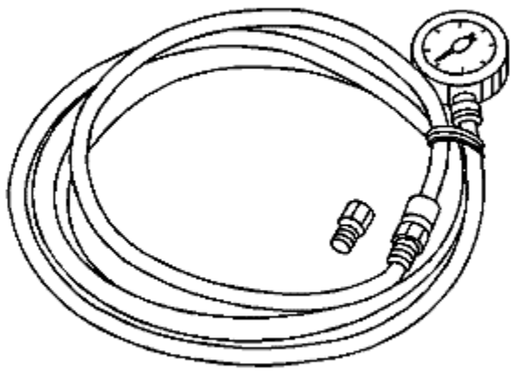	EN-498-B KM-498-B Pressure Gauge
	EN-652 DT-652

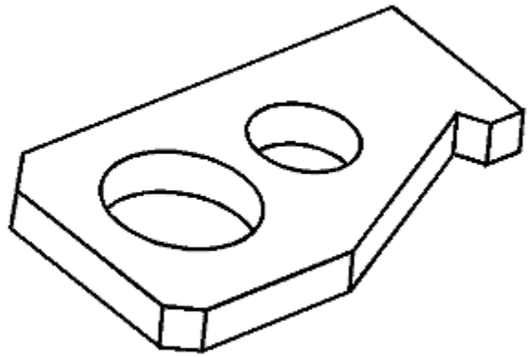	KM-652 Flywheel Holder
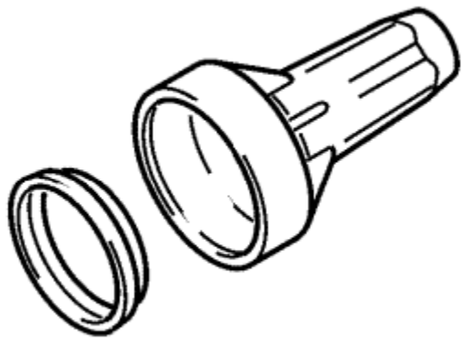	EN-658 KM-658 J-35264 Installer
	EN-663

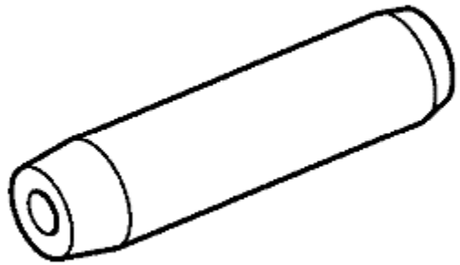	KM-663 Installer
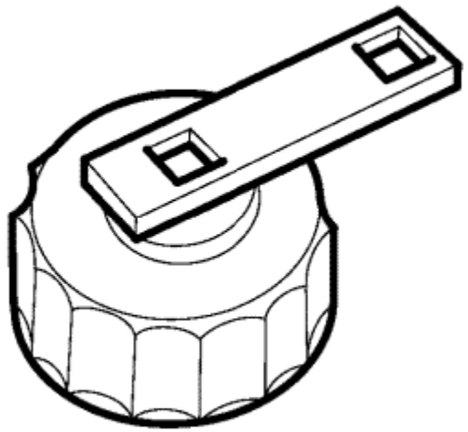	EN-726-A KM-726-A J-29142 Oil Filter Spanner
	EN-840

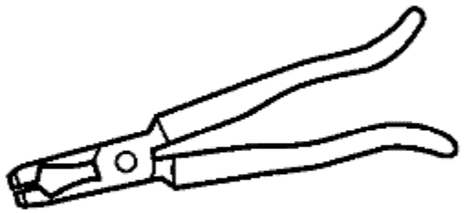	KM-840 Pliers / Remover
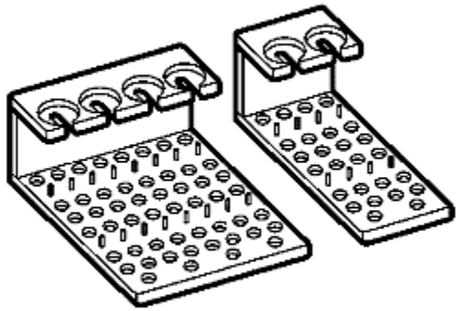	EN-849 KM-849 Assembly Tray
	EN-952

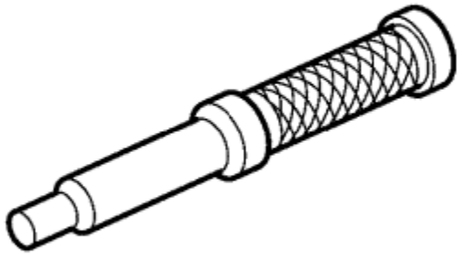	KM-952 Fixing Tool Crankshaft
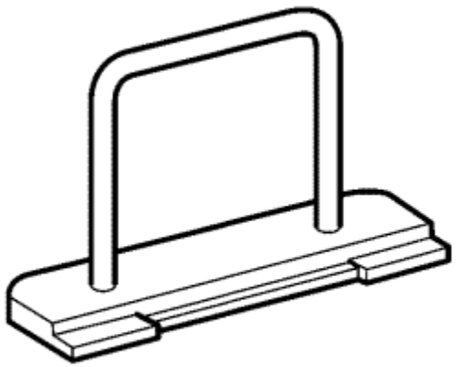	EN-953-1 Fixing Tool Camshaft
	EN-955

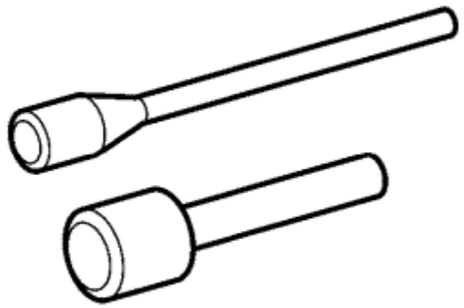	KM-955 Locking Pins
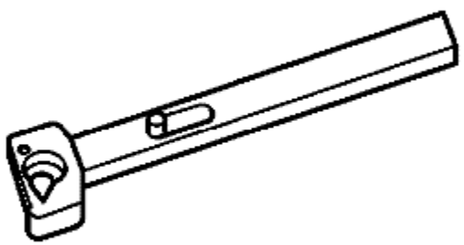	EN-956-1 KM-956-1 Extension
	EN-960

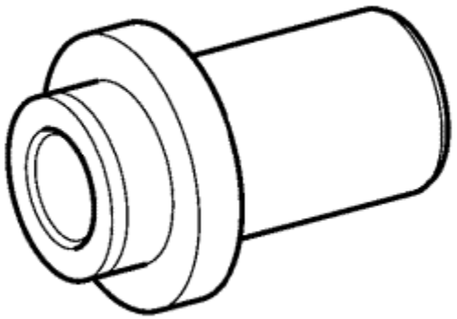	KM-960 Installer
	EN-45000 KM-J-45000 J-45000 Remover Oil Seal
	EN-6009

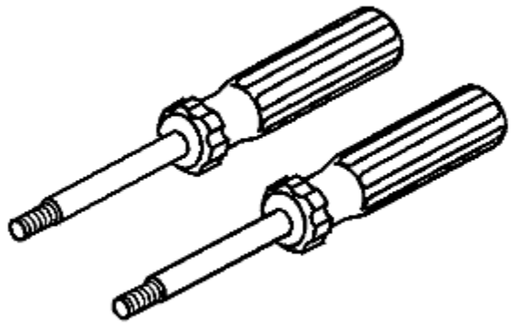	KM-6009 Remover/Installer
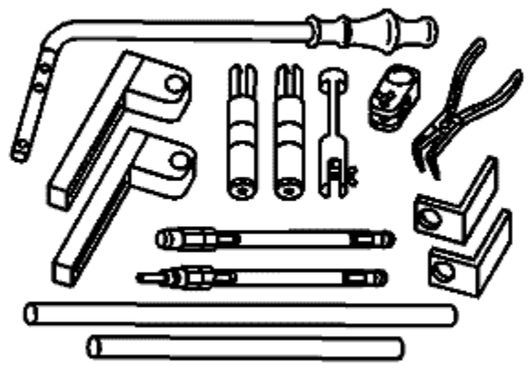	EN-6086 MKM-6086 Basic Kit, Spring and Wedge Replacer
	EN-6167

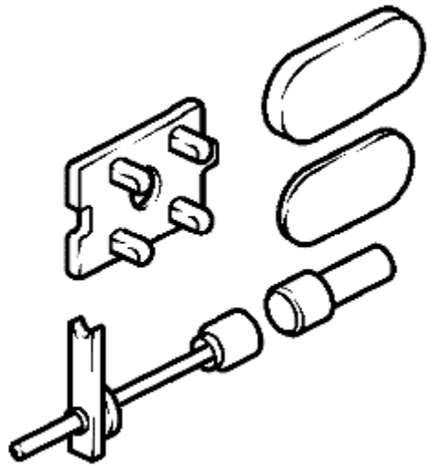	KM-6167 Adapter Kit
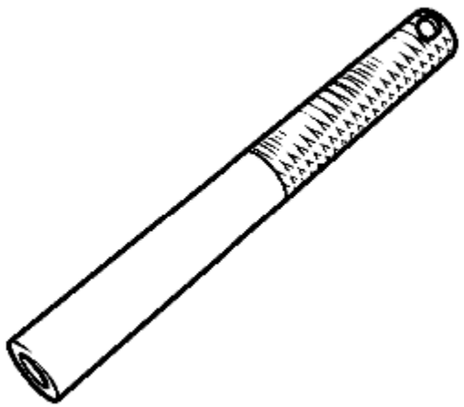	EN-6171 KM-6171 Release Tool
	EN-6179

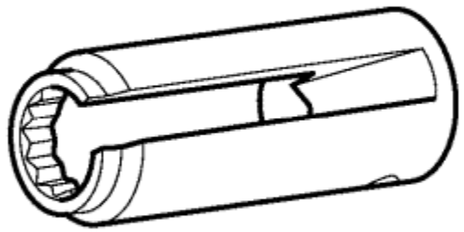	KM-6179 Installer / Remover
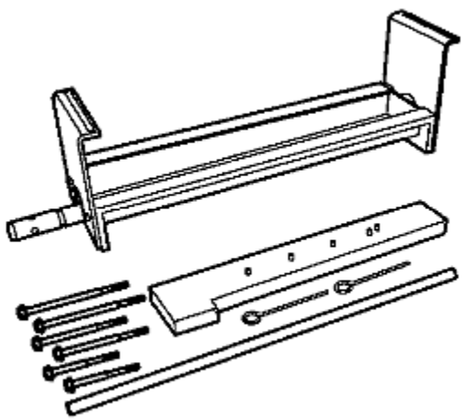	EN-6215 KM-6215 Mounting Equipment
	EN-6216

	MKM-6216 Dial Gauge
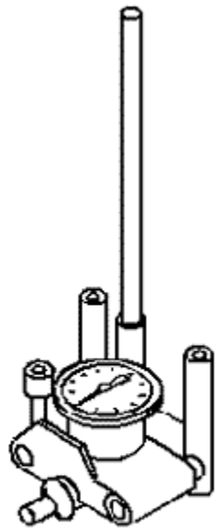	EN-8087 J-8087 Cylinder Bore Gauge

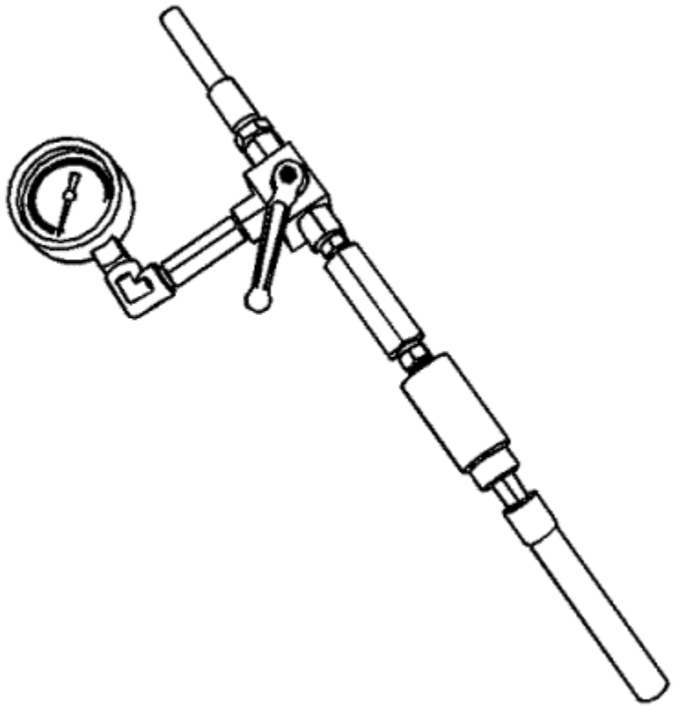	EN-48248 Cylinder Compression Pressure Gauge
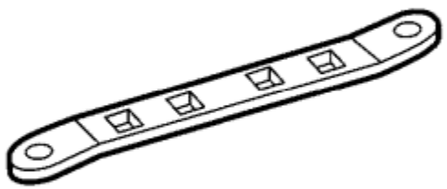	EN-48488 KM-956 Holding Spanner

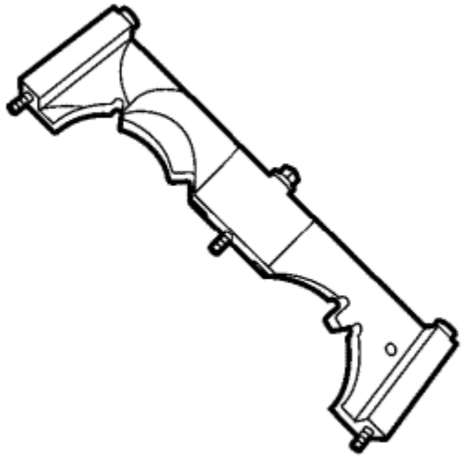	EN-49977-100 Fixation Sensor Discs and Camshafts
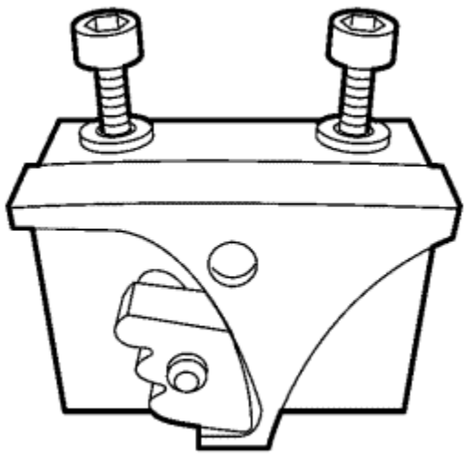	EN-49977-200 Fixing Tool
	EN-49979

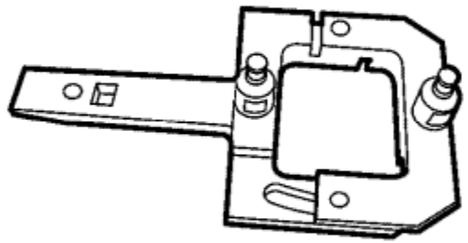	Retainer Shock Mount Crankshaft
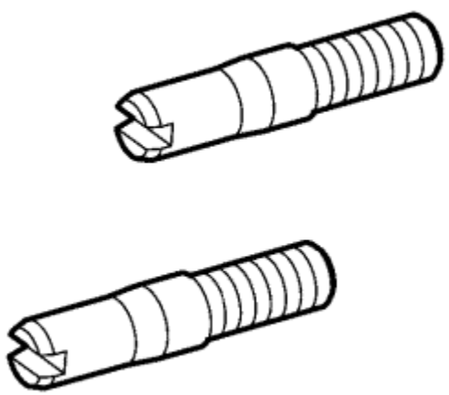	EN-49980 Guidance Pins Oil sump
	GE-571-B

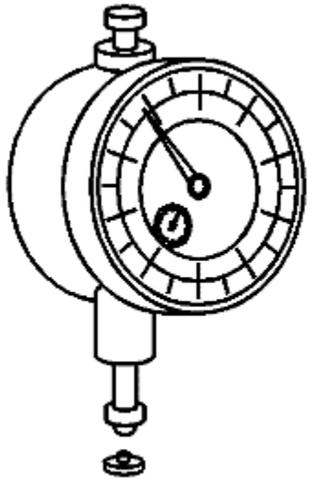	MKM-571-B Dial Gauge

© Copyright Chevrolet. All rights reserved

Fastener Tightening Specifications

Application	Specification	
	Metric	English
Accessory DC Power Control Module Cooling Air Duct Fasteners	1.5 N·m	13 lb in
Air Conditioning and Drive Motor Cooling Compressor Bolt	22 N·m	16 lb ft
Air Conditioning and Drive Motor Cooling Compressor Nut	22 N·m	16 lb ft
Air Conditioning Compressor and Condenser Hose Bolt	22 N·m	16 lb ft
Air Conditioning Compressor and Condenser Hose Nut	17 N·m	12 lb ft
Air Conditioning Compressor Front Hose Bracket Bolt	17 N·m	12 lb ft
Air Conditioning Compressor Front Hose Bolt	22 N·m	16 lb ft
Air Conditioning Compressor Front Hose Nut	22 N·m	16 lb ft
Air Conditioning Compressor And Evaporator Hose Nut	17 N·m	12 lb ft
Air Conditioning Refrigerant Pressure Sensor	6 N·m	53 lb in
Air Conditioning Thermal Expansion Valve Bolt	7 N·m	62 lb in
Air Distribution Case Screw	3 N·m	27 lb in
Air Inlet Fastener	2.5 N·m	23 lb in
Air Inlet Housing Fastener	2.5 N·m	23 lb in
Air Inlet Valve Actuator Gear Screw	1.5 N·m	13 lb in
Blower Motor Control Module Screw	2 N·m	17 lb in
Bracket Heater Core Inlet Tube Bolt	2.5 N·m	23 lb in
Bracket Heater Core Outlet Tube Bolt	2.5 N·m	23 lb in
Heater Inlet and Outlet Pipe Bolt	17 N·m	12 lb ft
Heater Coolant Heater	9 N·m	80 lb in
Heater Water Shutoff Valve Nuts	9 N·m	80 lb in
HVAC Module Assembly Fastener	10 N·m	89 lb in
Instrument Panel Centre Air Outlet Duct Fasteners	1.5 N·m	13 lb in
Mode Actuator Screw	1.5 N·m	13 lb in
Side Window Defogger Outlet Duct Fasteners	1.5 N·m	13 lb in

© Copyright Chevrolet. All rights reserved

Adhesives, Fluids, Lubricants, and Sealers

Application	Type of Material	GM Part Number	
		United States	Canada
Air Conditioning System	Lubricant	12356150	10953485
POE Oil	Lubricant	88862657	88862658

© Copyright Chevrolet. All rights reserved

Refrigerant System Specifications

Application	Specification	
	Metric	English
POE Oil GM P/N 88862657 for United States POE Oil GM P/N 88862658 for Canada		
Refrigerant Charge, R134a	950 g	2.1 lb
Total System POE Oil Capacity	180 ml	6.1 oz
Compressor[2]	85 ml[1]	2.9 oz[1]
Condenser	20 ml[1]	0.7 oz[1]
Desiccant Cartridge	10 ml[1]	0.3 oz[1]
Evaporator	10 ml[1]	0.3 oz[1]
Drive Motor Battery Cooler	10 ml[1]	0.3 oz[1]
Abrupt Refrigerant Loss	60 ml[3]	2.0 oz[3]

[1]If more than the specified amount of POE oil was drained from a component, add the equal amount of oil drained.

[2]The service compressor contains 85ml (2.9 oz) of POE oil.

[3]Abrupt refrigerant loss due to large leak, hose rupture, collision, or pressure relief valve opening. Conditions that allow the refrigerant to seep or bleed off over time do not cause this oil loss. Upon replacement of a component that caused a large refrigerant loss, also add the required amount of oil for the particular component.

© Copyright Chevrolet. All rights reserved

Handling of Refrigerant Lines and Fittings

Caution: To avoid system damage use only R-134a dedicated tools when servicing the A/C system.

- Keep all metal tubing lines free of dents or kinks. Any line restrictions will cause the loss of system capacity.
- Never bend a flexible hose line to a radius of less than four times the diameter of the hose.
- Never allow a flexible hose line to come within 65 mm (2-1/2 in) of the exhaust manifold.
- Inspect flexible hose lines regularly for leaks or brittleness.
- Replace flexible hose lines with new lines if you find signs of deterioration or leaking.
- Discharge the refrigeration system of all refrigerant before disconnecting any fitting in the refrigeration system.
- Proceed very cautiously regardless of the gauge readings.

Warning: For personal protection, goggles and lint-free gloves should be worn and a clean cloth wrapped around fittings, valves, and connections when doing work that includes opening the refrigerant system. If refrigerant comes in contact with any part of the body severe frostbite and personal injury can result. The exposed area should be flushed immediately with cold water and prompt medical help should be obtained.

- Open the fittings very slowly.
- If you notice pressure when you loosen a fitting, allow the pressure to bleed off as described Discharging, Adding Oil, Evacuating, and Charging Procedures for A/C System.
- Cap or tape any refrigerant line immediately after it is opened. This will prevent the entrance of moisture and dirt, which can cause internal compressor wear or plugged lines in the condenser, the evaporator core, the expansion valve, or the compressor inlet screens.

  Note: Use two proper wrenches to connect the fittings.

- Back up the opposing fitting to prevent distortion of the connecting lines or the components.
- Keep the sealing surfaces in perfect condition. A burr or a piece of dirt may cause a refrigerant leak.
- When seal washers are used, always install the seal washer without lubrication.
- When O-rings are used, always lightly coat the new O-ring seal with mineral base 525 viscosity refrigerant oil prior to installation.

&#169© Copyright Chevrolet. All rights reserved

Leak Testing

Special Tools

- *GE-50078* Infrared Refrigerant Leak Detector
- *GE-42220* Universal 12V Leak Detection Lamp
- *GE-43872* Fluorescent Dye Cleaner

For equivalent regional tools, refer to Special Tools .

Refrigerant Leak Testing

Note: All A/C system repairs must be verified using electronic leak detection. Dye detection may take up 2 or 3 days to be reliable.

Note: General Motors vehicles are now manufactured with fluorescent dye installed directly into the air conditioning (A/C) system.

Note: Directive 2006/40/EC: If a high amount of refrigerant has escaped, the needed repair must be completed before the air conditioning is filled with refrigerant (Article 6 section 3 and 3 chemicals climate protection order).

The fluorescent dye mixes and flows with the refrigerant oil throughout the refrigerant system.

Verifying some passive leaks may require using the *GE-50078* detector, even though the A/C system contains fluorescent dye.

Visual Inspection

Visually trace the entire refrigerant system and look for signs of lubricant leakage, damage, and corrosion on all lines hoses and components (Oil can be an indication of a leak). Each questionable area should be checked for leaks using an electronic leak detector.

Fluorescent Leak Detector

Note: Always use UV protective eyewear when working with UV light.

Fluorescent dye will assist in locating any leaks in the A/C system.

Note: POE oil is water soluble.

- Condensation on the evaporator core or the refrigerant lines may wash the POE oil and fluorescent dye away from the actual leak. Condensation may also carry dye through the HVAC module drain.
- Leaks in the A/C system will be indicated in a light green or yellow colour when using the leak detection lamp.
  Use the leak detection lamp in the following areas:
  - All fittings or connections that use seal washers or O-rings
  - All of the A/C components
  - The A/C hoses and pressure switches
  - The HVAC module drain tube, if the evaporator core is suspected of leaking
  - The service port sealing caps

    The sealing cap is the primary seal for the service ports.
- Follow the instructions supplied with the *GE-42220* lamp .
- To prevent false diagnosis in the future, thoroughly clean the residual dye from any area where leaks were found. Use a rag and the approved *GE-43872* cleaner.

Replacing System Dye After Flushing

Note: Do not add dye to the refrigerant system equipped with high voltage electric compressors. The only means of replenishing dye after flushing is by replacing components containing the dye. Currently a compatible dye wafer is contained in the O.E. desiccant package. Adding dye that is not compatible with the high voltage electric compressor may cause compressor damage and high voltage isolation faults.

To prevent false diagnosis, thoroughly clean any residual dye from the service port with a rag and the approved fluorescent dye cleaner *GE-43872* cleaner.

Electronic Leak Detection

Infrared detectors operate differently than heated sensor type detectors. They detect changes in concentration of refrigerant rather than absolute concentration. If the tip is held at a detected leak for more than 5 seconds the detector will saturate and zero to that concentration and will no longer detect leaks at that concentration or less. Move tip away from the leak saturation area for 30 seconds to reset the sensitivity of the detector.

Adequate system pressure is required for effective leak detection.

- If system is empty install 10% of system charge.
- Temperature must be above 60 F.

Do not use:

- Soap solutions (not effective for leak detection)
- Shop air (will introduce contamination to the refrigerant system)
- High pressure gasses i.e nitrogen (may cause system damage)

Air movement from the engine cooling fan can affect the detectors ability to detect leaks. Always leak test with engine off and if possible after engine has reached normal operating temperature.

- All fittings and components should be checked.
- Take care not to contaminate the probe tip if the part being tested is contaminated.
- No cleaners containing solvents should be used prior to using electronic leak detector.
- Always follow the refrigerant system around in a continuous path so that no areas of potential leaks are missed. Move the tip along the refrigerant system at a rate of no more than 75 mm per second and a distance of 10 mm from the surface being tested. If a leak is found, always continue to test the remainder of the system.

Follow the instructions supplied with the *GE-50078* detector .

Leak Detection with Nitrogen

If a leak test with fluorescent leak detector or halogen leak detector is not possible, then a leak test with nitrogen must take place. Use the Air Conditioning Leak Detector Nitrogen Kit+ for this test.

Using soap suds or a leak detection spray, coat the suspected leak area and look for visible bubbles caused by nitrogen escaping from the leak.

&#169© Copyright Chevrolet. All rights reserved

Air Conditioning (A/C) System Performance Test

Table 1: A/C Performance Table

This test measures the operating efficiency of the A/C system under the following conditions:

- The current ambient air temperature
- The current relative humidity
- The high side pressure of the A/C system
- The low side pressure of the A/C system
- The temperature of the air being discharged into the passenger compartment

Test Description

The numbers below refer to the step numbers on the diagnostic table.

1. This step determines if the A/C system has at least the minimum refrigerant charge required to operate the system without damage.
2. This step measures the performance of the A/C system.
3. This step is to allow for vehicle variations as well as high ambient temperatures.

Step	Action	Values	Yes	No
Note: • The ambient air temperature must be at least 16°C (60°F). • Do not induce additional air flow across the front of the vehicle during the test. • If you were sent here from a DTC diagnostic table, clear the DTC upon completion of this test.				
	1. Park the vehicle inside or in the shade. 2. Open the windows in order to ventilate the interior of the vehicle. 3. If the A/C system was operating, allow the A/C system to equalise for about 2 minutes. 4. Turn OFF the ignition. 5. Install the *J-43600* ACR 2000 Air Conditioning Service Centre or *GE-48800*	More than 16°C (60°F) - 345 kPa (50 psi) More than 24°C (75°F) -		

1	CoolTech A/C Recharge Machine . 6. Record the ambient air temperature and humidity. 7. Record the low and high side STATIC pressure readings. Are both the low side and high side pressures within the specified value?	483 kPa (70 psi) More than 33°C (90°F) - 690 kPa (100 psi)	Go to Step 2	Go to Leak Testing
2	**Note:** Record the relative humidity and the ambient air temperature at the time of the test. 1. Close the vehicle doors and windows. 2. Open the driver's door window 12.7-15.2 cm (5-6 in). 3. Select the following HVAC control settings: • The A/C is ON. • The coldest temperature setting • The maximum blower speed • Recirculation mode • The instrument panel (I/P) outlet mode • All I/P outlets are OPEN. 4. Install thermometers in the left and right centre panel air outlets. 5. Apply the handbrake. 6. Place the transaxle/transmission in one of the following positions: • PARK (Automatic) • NEUTRAL (Manual) 7. Start the engine and warm to operating temperature. 8. Operate the A/C system for 5 minutes. 9. Inspect A/C components for the following conditions: • Abnormal frost areas • Unusual noises 10. Record the following information: • The panel outlet air temperatures • The low-side pressure • The high-side pressure 11. Compare the low and high side pressures and the panel output temperatures to the A/C Performance Table below. Does all the data recorded fall within the specified ranges of the A/C Performance Table below?	-	Go to Step 5	Go to Step 3

3	If the pressures and temperatures recorded do not fall within the specified ranges: 1. Continue to operate the A/C system for an additional 5 minutes. 2. Record the pressures and temperatures again. 3. Compare the low and high side pressures and the panel output temperature to the A/C Performance Table below. Does all the data recorded fall within the specified ranges of the A/C Performance Table below?	-	Go to Step 5	Go to Step 4
4	Perform the necessary repairs. Refer to A/C Diagnostics Chart . Is the action complete?	-	Go to Step 5	-
5	Operate the system in order to verify the test results. Did you find the same results?	-	System OK	Go to Symptoms - HVAC Systems - Automatic

A/C Performance Table

Ambient Temperature	Relative Humidity	Low Side Service Port Pressure	High Side Service Port Pressure	Maximum Left Center Discharge Air Temperature
13-18°C (55-65°F)	0-100%	296-268 kPa (43-39 psi)	826-1198 kPa (120-174 psi)	9°C (48°F)
19-24°C (66-75°F)	Less than 40%	310-310 kPa (45-45 psi)	950-1329 kPa (138-193 psi)	12°C (52°F)
	Greater than 40%	282-289 kPa (41-42 psi)	1019-1446 kPa (148-210 psi)	12°C (52°F)
25-29°C (76-85°F)	Less than 35%	275-296 kPa (40-43 psi)	1178-1502 kPa (145-190 psi)	12°C (52°F)
	35-50%	268-296 kPa (39-43 psi)	1240-1557 kPa (180-226 psi)	12°C (52°F)
	Greater than 50%	261-296 kPa (38-43 psi)	1281-1660 kPa (186-241 psi)	12°C (54°F)
30-35°C (86-95°F)	Less than 30%	254-275 kPa (37-40 psi)	1357-1708 kPa (197-248 psi)	12°C (52°F)
	30-50%	254-289 kPa (37-42 psi)	1412-1791 kPa (205-260 psi)	13°C (54°F)
	Greater than 50%	254-303 kPa (37-44 psi)	1481-1908 kPa (215-277 psi)	13°C (55°F)
36-41°C (96-105°F)	Less than 20%	227-248 kPa (33-36 psi)	1550-1887 kPa (225-274 psi)	10°C (50°F)
	20-40%	234-268 kPa (34-39 psi)	1591-1977 kPa (231-287 psi)	13°C (54°F)
	Greater than 40%	241-289 kPa (35-42 psi)	1667-2067 kPa (242-300 psi)	13°C (55°F)
42-46°C (106-115°F)	Less than 20%	199-227 kPa (29-33 psi)	1756-2067 kPa (255-300 psi)	10°C (50°F)
	Greater than 20%	206-254 kPa (30-37 psi)	1812-2170 kPa (263-315 psi)	13°C (54°F)
47-49°C (116-120°F)	Below 30%	186-227 kPa (27-33 psi)	1991-2308 kPa (289-335 psi)	12°C (52°F)

&#169© Copyright Chevrolet. All rights reserved

A/C Diagnostics Chart

Low Side Gauge Reading	High Side Gauge Reading	Potential Causes
Low	Low	Low Refrigerant Charge
		Restriction between Compressor and High Side port
	Low/Normal	Evaporator Freezing
	High	Restriction between the Low Side and High Side ports or Restricted TXV
		Compressor Stuck at Maximum Displacement
High	Low	Compressor has Low Displacement or Internal Malfunction
	High	Malfunctioning Cooling Fans
		Refrigerant Overcharge
		Restriction between the Low Side Port and Compressor Inlet
		Restricted Condenser Air Flow
		Expansion Device Stuck Open
		Air in A/C System
Normal/High	Normal/High	Refrigerant Contamination
		PAG or POE Oil Overcharge

© Copyright Chevrolet. All rights reserved

Heating Performance Diagnostic

Step	Action	Yes	No
DEFINITION: Heating system performance.			
1	Were you sent here from Symptoms or another diagnostic table?	Go to Step 2	Go to Symptoms - HVAC Systems - Automatic
2	**Warning:** Refer to Moving Parts and Hot Surfaces Warning in the Preface section. 1. Turn ignition to on. 2. Select vent mode. 3. Select the warmest temperature setting. 4. Select Maximum blower speed. 5. Feel the temperature of the heater core inlet hose. Does the heater core inlet hose feel warm to hot?	Go to Step 3	Go to Step 9
3	1. Select the minimum blower speed. 2. Feel the temperature of the heater core inlet and outlet hoses. Does the heater core inlet hose feel warmer than the heater core outlet hose?	Go to Step 7	Go to Step 4
4	1. Install a thermometer into the centre I/P panel air outlet. 2. Secure a thermometer to the heater core outlet hose. 3. Select the maximum blower speed. 4. Record the temperature at the following location. 5. Record the temperature at the following locations: • The centre I/P panel air outlet • The heater core outlet hose 6. Compare the recorded temperatures. Are the two temperature readings about equal?	Go to Step 5	Go to Step 6
5	1. Inspect and repair the following areas of the vehicle for cold air leaks: • The scuttle • The recirculation door • The HVAC module case		

	2. Perform the necessary repairs. Are the repairs complete?	Go to Step 11	-
6	1. Inspect the temperature door operation. Refer to Heating and Air Conditioning System Description and Operation . 2. Perform any necessary repairs. Are the repairs complete?	Go to Step 11	-
7	1. Turn the ignition to off. 2. Back-flush the heater core. 3. Turn the ignition to on. 4. Select the vent mode. 5. Select the minimum blower speed. 6. Select the warmest temperature setting. 7. Feel the temperature of the heater core inlet and outlet hoses. Does the heater core inlet hose feel warmer than the heater core outlet hose?	Go to Step 8	Go to Step 11
8	Replace the heater core. Refer to Heater Core Replacement . Is the repair complete?	Go to Step 11	-
9	Inspect and repair the following areas: • Kinked hose • Heater valve inlet filter • Air in the coolant circuit • Inoperable heater valve Did you find and correct the condition?	Go to Step 11	Go to Step 10
10	Inspect the coolant heater control module. Refer to Heating Performance Diagnostic . Is the repair complete?	Go to Step 11	-
11	Operate the system in order to verify the repair. Did you find and correct the condition?	System OK	Go to Step 2

&#169© Copyright Chevrolet. All rights reserved

Defrosting Insufficient

Step	Action	Yes	No
DEFINITION: Time required to defrost the windshield is longer than normal.			
1	Were you sent here from Symptoms or another diagnostic table?	Go to Step 2	Go to Symptoms - HVAC Systems - Automatic
2	1. Turn ignition to ON.. 2. Select the DEFROST mode. 3. Select the maximum blower speed. Does sufficient air flow from the defroster outlets?	Go to Step 3	Go to Step 6
3	1. Select the minimum blower speed. 2. Select the maximum temperature setting. **Warning:** Refer to Moving Parts and Hot Surfaces Warning in the Preface section. 3. Feel the temperature of the inlet and outlet hoses at the heater core. Does the inlet hose feel warmer than the outlet hose?	Go to Step 7	Go to Step 4
4	Perform the A/C system performance test. Refer to Air Conditioning (A/C) System Performance Test . Is the A/C system operating within the specifications?	Go to Step 5	Go to Step 8
5	Inspect for correct operation of the air inlet door. Is the air inlet door operating correctly?	Go to Step 10	Go to Step 9
6	Repair the air delivery concern. Refer to Diagnostic Starting Point - Vehicle . Is the repair complete?	Go to Step 10	-
7	Repair the heating concern. Refer to Heating Performance Diagnostic . Is the repair complete?	Go to Step 10	-
8	Repair the A/C performance concern. Refer to Air Conditioning (A/C) System Performance Test . Is the repair complete?	Go to Step 10	-
	Repair the air inlet door concern. Refer to Air Inlet Assembly Replacement .		

9	Is the repair complete?	Go to Step 10	-
10	Operate the system in order to verify the repair. Did you find and correct the problem?	System OK	Go to Step 2

© Copyright Chevrolet. All rights reserved

Noise Diagnosis - Blower Motor

Step	Action	Yes	No
DEFINITION: Noise originating from the blower motor.			
1	Were you sent here from Symptoms or another diagnostic table?	Go to Step 2	Go to Symptoms - HVAC Systems - Automatic
2	Inspect the air inlet grille for debris. Is debris present?	Go to Step 8	Go to Step 3
3	1. Sit inside the vehicle. 2. Close the vehicle doors and windows. 3. Turn the ignition to the accessory position. 4. Cycle the blower motor through all of the speeds and modes in order to determine where and when the noise occurs. Is a noise evident during the blower operation?	Go to Step 4	Go to Step 11
4	Inspect for excessive vibration at each blower motor speed by feeling the blower case. Is excess vibration present?	Go to Step 6	Go to Step 5
5	Listen to the blower motor at each speed. Is the blower motor making a squeaking or chirping noise?	Go to Step 9	Go to Step 11
6	1. Remove the blower motor. Refer to Blower Motor Replacement . 2. Inspect the blower motor impeller for deposits of foreign material. 3. Inspect the blower motor for deposits of foreign material. Did you find any foreign material on the blower motor or blower motor impeller?	Go to Step 8	Go to Step 7
7	Inspect the blower motor for the following conditions: • Cracked blades • A loose impeller retainer • Improper impeller alignment Did you find any of these conditions?	Go to Step 9	Go to Step 10

8	Remove the foreign material. Is the action complete?	Go to Step 10	-
9	Replace the blower motor. Refer to Blower Motor Replacement . Is the repair complete?	Go to Step 11	-
10	Install the blower motor. Refer to Blower Motor Replacement . Is the action complete?	Go to Step 11	-
11	Operate the system in order to verify the repair. Did you find and correct the condition?	System OK	Go to Step 2

&#169© Copyright Chevrolet. All rights reserved

Air Conditioning Compressor Oil Diagnosis

Note: To avoid repeat compressor failure, always inspect the condition of the refrigerant oil and take the appropriate corrective action before installing the replacement compressor.

Condition	Corrective Action
Clean Oil no debris present	No corrective action necessary.
Clean Oil with debris present	• Inspect the suction port of the replacement compressor for presence of a suction screen. If the replacement compressor does NOT contain a suction screen, install suction screen in the line. • Replace desiccant or component containing the desiccant. • Replace desiccant filter if applicable. • Remove and inspect high pressure side filter (if applicable). • Remove, inspect, clean, or replace orifice tube. • If the system has a front orifice tube and is equipped with a filter in the rear auxiliary line, remove, inspect, clean, or replace the filter. • If the system has a front orifice tube and is not equipped with a filter in the rear auxiliary line, remove the filter in the auxiliary TXV and Install a universal inline A/C Filter P/N 89016656 (AC Delco P/N 15-10413) as close to the rear TXV as possible.
Dark brown/black and/or pungent/unusual odour with no debris present	• Replace desiccant or component containing the desiccant. • Replace desiccant filter if applicable. • Flush refrigerant system. Refer to Flushing .
Dark brown/black and/or pungent/unusual odour with debris present	• Replace desiccant or component containing the desiccant. • Replace desiccant filter if applicable. • Flush refrigerant system. Refer to Flushing . • Inspect the suction port of the replacement compressor for presence of a suction screen. If the replacement compressor does NOT contain a suction screen, install suction screen. • Remove and inspect high pressure side filter (if applicable). • Remove, inspect, clean, or replace orifice tube. • If the system has a front orifice tube and is equipped with a filter in the rear auxiliary line, remove, inspect, clean, or replace the filter. • If the system has a front orifice tube and is not equipped with a filter in the rear auxiliary line, remove the filter in the auxiliary TXV and install a universal inline A/C Filter P/N 89016656 (AC Delco P/N 15-10413) as close to the rear TXV as possible.
Oil Overcharge	Flush refrigerant system. Refer to Flushing .

Refrigerant Contamination	Flush refrigerant system. Refer to Flushing .
Hybrid Polyolester Refrigerant Oil (POE) Contamination	• Flush refrigerant system. Refer to Flushing . • Replace desiccant or component containing the desiccant. • Replace desiccant filter if applicable.

&#169© Copyright Chevrolet. All rights reserved

Noise Diagnosis - HVAC Module

Step	Action	Yes	No
DEFINITION: Noise originating from the HVAC module.			
1	Were you sent here from Symptoms or another diagnostic table?	Go to Step 2	Go to Symptoms - HVAC Systems - Automatic
2	1. Start the engine. 2. Cycle through all of the following: • Blower motor speeds • HVAC modes • Temperature control settings 3. Determine the type of noise: • Scrape, pop • Tick/click, chirp or groaning • Air rush/whistle Is a scrape or pop noise evident when selecting modes or temperature settings?	Go to Step 6	Go to Step 3
3	Is a tick/click, chirping, groaning or scraping noise present, but decreases as blower motor speed is decreased?	Go to Step 6	Go to Step 4
4	Is an air rush/whistle noise evident in all modes but not all temperature settings?	Go to Step 6	Go to Step 5
5	Is an air rush/whistle noise evident only in defrost or floor mode?	Go to Step 6	Go to Step 6
6	Remove the HVAC module. Refer to Air Conditioning and Heater Module Assembly Removal and Installation . Is the action complete?	Go to Step 7	-
7	1. Inspect the air flow doors for proper operation. 2. Inspect the ducts for obstructions or foreign materials. Were any of these conditions found?	Go to Step 10	Go to Step 8
8	Inspect the mode and temperature doors and seals for warping or cracking. Are the doors in normal condition?	Go to Step 11	Go to Step 9

9	Replace the appropriate door and/or seals. Is the repair complete?	Go to Step 11	-
10	Remove any obstructions or foreign material found. Is the action complete?	Go to Step 11	-
11	Install the HVAC Module. Refer to Air Conditioning and Heater Module Assembly Removal and Installation . Is the action complete?	Go to Step 12	-
12	Operate the system to verify the repair. Did you find and correct the condition?	System OK	Go to Step 2

&#169© Copyright Chevrolet. All rights reserved

Odour Diagnosis

Step	Action	Yes	No
DEFINITION: Odour originating or noticed through the HVAC system.			
1	Were you sent here from Symptoms or another diagnostic table?	Go to Step 2	Go to Symptoms - HVAC Systems - Automatic
2	1. Sit inside the vehicle. 2. Close all of the doors and windows. 3. Start Turn ignition to on. 4. Select the maximum blower speed. 5. Select the PANEL air outlet mode. 6. Select the coldest temperature setting. 7. Cycle through all of the blower speeds, modes and temperatures to define what type of odour is present. • Musty smell • Coolant smell • Oil smell Does the odour have a musty smell?	Go to Step 3	Go to Step 8
3	Inspect the HVAC filter and the air inlet grille for debris. Is debris present?	Go to Step 4	Go to Step 5
4	Remove any debris. Is the action complete?	Go to Step 15	-
5	Inspect for wet carpeting. Is the carpet wet?	Go to Step 6	Go to Step 8
6	Inspect for the following conditions: 1. Water leaks around the windscreen 2. Blockage of the HVAC module drain 3. Leaks around the door seals	Go to	

	Is a leak present?	Step 7	Go to Step 15
7	Repair the leak as necessary. Is the repair complete?	Go to Step 15	-
8	Does the odour have a coolant smell?	Go to Step 9	Go to Step 12
9	Inspect the cooling system for leaks. Refer to Loss of Coolant . Is a leak present?	Go to Step 10	Go to Step 12
10	Inspect for coolant leaking inside the vehicle or for a film build-up on the windscreen. Is the condition present?	Go to Step 11	Go to Step 15
11	Replace the heater core. Refer to Heater Core Replacement . Is the repair complete?	Go to Step 15	-
12	Does the odour have an oily smell?	Go to Step 13	Go to Step 15
13	1. Inspect the engine compartment for any leaks. Refer to the following procedures: • Oil Leak Diagnosis • Fluid Leak Diagnosis 2. Repair any oil leaks. Is the repair complete?	Go to Step 15	-
14	A musty odour can be caused by mould or mildew build-up on the evaporator or the heater core or inside of the HVAC module. Refer to Odour Correction . Is the action complete?	Go to Step 15	-
15	Operate the system in order to verify the repair. Did you find and correct the condition?	System OK	Go to Step 2

&#169© Copyright Chevrolet. All rights reserved

Odour Correction

Eliminating Air Conditioning Odour

1. Odours may be emitted from the air conditioning system primarily at start up in hot, humid climates. The following conditions may cause the odour:
   - Debris is present in the HVAC module assembly.
   - Microbial growth on the evaporator core.
2. When the blower motor fan is turned on, the microbial growth may release an unpleasant musty odour into the passenger compartment. To remove odours of this type, the microbial growth must be addressed. Perform the following procedure:
   - Remove evaporator core. Refer to Air Conditioning Evaporator Replacement .
   - Clean evaporator core with a solution of 40% vinegar and 60% water.
   - Refit evaporator core. Refer to Air Conditioning Evaporator Replacement .

&#169© Copyright Chevrolet. All rights reserved

Refrigerant Recovery and Recharging - High Voltage Electric Compressor

Special Tools

- *GE 43600* Hybrid A/C Oil Injector Adapter Hose
- *GE-45037-A* A/C Oil Injector
- *GE-48800* CoolTech A/C Recharge Machine
- *GE 48997* Hybrid A/C Oil Injector Adapter Hose

For equivalent regional tools, refer to Special Tools .

Danger: This A/C system's high voltage A/C Compressor uses Polyolester (POE) refrigerant oil. Use of any refrigerant oil other than POE may result in compressor failure and/or loss of high voltage isolation which may result in serious danger or death. For applicable equipment please refer to TIS Newsletter/repair equipment information.

Warning: To prevent personal injury, avoid breathing A/C Refrigerant and lubricant vapour or mist. Work in a well ventilated area. To remove refrigerant from the A/C System, use service equipment designed for recovery that is certified to meet the requirements of the appropriate SAE Standards. If an accidental system discharge occurs, ventilate the work area before continuing service. Additional health and safety information may be obtained from the refrigerant, refrigerant recovery, and lubricant manufacturers.

Warning: For personal protection, goggles and lint-free gloves should be worn and a clean lint free cloth wrapped around fittings, valves, and connections when doing work that includes opening the refrigerant system. If refrigerant comes in contact with any part of the body severe frostbite and personal injury can result. The exposed area should be flushed immediately with cold water and prompt medical help should be obtained.

Caution: This A/C refrigerant system is equipped with a High Voltage electric A/C compressor and you must replace the desiccant if the A/C refrigerant system has been open to atmosphere for more than thirty minutes, or if the A/C refrigerant oil has been contaminated. Failure to replace the desiccant will result in damage to the A/C refrigerant system.

Caution: R-134a is the only approved refrigerant for use in this vehicle. The use of any other refrigerant may result in poor system performance or component failure and potentially void the vehicle warranty for the refrigerant system.

Caution: Do not lubricate A/C line seal washers as mineral oil will damage the seal and cause leaks. Use only 525 viscosity mineral oil to lubricate o-rings as well as fitting threads for the prevention of fitting seizure.

Caution: Failure to flush the refrigerant recovery recharge equipment hoses before adding refrigerant to a hybrid vehicle with an electric compressor may result in an unacceptable amount of Polyalkylene Glycol (PAG) oil entering the refrigerant system. This could result in reduced electrical resistance of the Polyolester (POE) oil and reduce its ability to provide the required level of high voltage isolation.

Both the *GE 43600* Hybrid A/C Oil Injector Adapter Hose and *GE-48800* CoolTech A/C Recharge Machine are a complete air conditioning service centre for R-134a. The ACR 2000 recovers, recycles, evacuates and recharges A/C refrigerant quickly, accurately and automatically. The unit has a display screen that contains the function controls and displays prompts that will lead the technician through the recover, recycle, evacuate and recharge operations. R-134a is recovered into and charged out of an internal storage vessel. Both units automatically replenish this vessel from an external source tank in order to maintain a constant 5.45-6.82 kg (12-15 lbs) of A/C refrigerant.

The ACR 2000 has a built in A/C refrigerant identifier that will test for contamination, prior to recovery and will notify the technician if there are foreign gases present in the A/C system. If foreign gases are present, the ACR 2000 will not recover the refrigerant from the A/C system.

The ACR 2000 also features automatic air purge, single pass recycling and an automatic oil drain.

GE-48800 CoolTech A/C Recharge Machine is released as a required replacement for the previously essential *GE 43600* Hybrid A/C Oil Injector Adapter Hose . The *GE-48800* CoolTech A/C Recharge Machine is SAE J2788 compliant and meets GM requirements for A/C Refrigerant System Repairs on all General Motors vehicles, including Hybrid systems with Polyolester (POE) refrigerant oil.

Refer to the *GE 43600* Hybrid A/C Oil Injector Adapter Hose and *GE-48800* CoolTech A/C Recharge Machine ACR 2000 manual for operation and setup instruction. Always recharge the A/C System with the correct amount of R-134a. Refer to Refrigerant System Specifications for the correct amount.

A/C Refrigerant System Oil Charge Replenishing

If oil was removed from the A/C system during the recovery process or due to component replacement, the oil must be replenished. If no oil was removed from the A/C system during recovery, do not charge any POE oil into the A/C system. POE refrigerant oil can be injected into a charged A/C system using *GE-45037-A* injector along with *GE 48997* adapter . For the proper quantities of oil to add to the A/C refrigerant system, refer to Refrigerant System Specifications .

© Copyright Chevrolet. All rights reserved

Flushing

Special Tools

- *GE-42220* Universal 12V Leak Detection Lamp
- *GE-48800* CoolTech A/C Recharge Machine
- *GE-45268* Flush Adaptor Kit

For equivalent regional tools. Refer to Special Tools .

ACR2000 (GE-48800) Hose Flush Procedure

Note:

- The following hose flushing procedure must be performed every time the ACR2000 (GE-48800) is used on the hybrid vehicles. It must be completed before the ACR2000 (GE-48800) is connected to the vehicle to begin a diagnostic or service procedure.
- The high voltage (HV) electric air conditioning (A/C) compressor uses a polyolester (POE) refrigerant oil instead of a polyalkylene glycol (PAG) synthetic refrigerant oil. This is due to the better electrical resistance of the POE oil and its ability to provide HV isolation.
- The following hose flush procedure is required to prevent oil cross-contamination. Laboratory testing has shown that flushing the ACR2000 (GE-48800) using the following procedure will minimise oil cross-contamination to a negligible amount (<500ppm).
- Failure to flush the ACR2000 (GE-48800) hoses before adding refrigerant to a hybrid vehicle with an electric A/C compressor may result in an unacceptable amount of PAG oil entering the refrigerant system. It may also cause a battery energy control module hybrid battery voltage system isolation lost diagnostic trouble code (DTC P1AE7) to be set. Additionally the A/C system warranty will be voided.
- The ACR2000 (GE-48800) will need to be retrofitted with a GE-48800-50 (Hose-ACR2000 Oil Flush Loop) to be able to perform the following procedure. All hybrid dealers will receive a GE-48800-50, with installation instructions, which is a component of the hybrid essential tool package. Dealers not included in the hybrid marketing plan and needing to service a hybrid vehicle can obtain the GE-48800-50 from SPX Kent Moore, 1-800-GM-TOOLS (1-800-468-6657).
  - The GE-48800-50 Retrofit Kit replaces the existing hose mount fittings on the ACR2000. Installation instructions are included to properly update the ACR2000 for hybrid vehicle A/C service.
  - New hybrid compliant A/C refrigerant recharging equipment (GE-48800) will replace current ACR2000 equipment. GE-48800 meets new SAE refrigerant recovery standard J-2788 and is specially designed for GM hybrid vehicle A/C service.

Before Beginning the Hose Flushing Procedure

1. Always allow the ACR2000 to complete the hose flush cycle to assure that all oil and refrigerant is removed from the hoses and the ACR2000 flow control circuit.

2. Assure the ACR2000 has at least 4.08 kg (9 lb) of chargeable refrigerant before proceeding.
3. A Low Filter Flow message displayed during the hose flushing process indicates that the hose couplers are not connected or open.

Hose Flushing Procedure

1. Connect the ACR2000 service hose couplers to the GE-48800-50 hose flush adapter fittings and open the service hose coupler valves.
2. Power on the ACR2000.
3. If there is positive pressure in the ACR2000 service hoses, press START to recover the service hoses. If there is 88-98 kPa (26-29 Hg) of vacuum showing on the display screen, skip to step 7.
4. Press Vacuum.
5. Press Start. Allow the vacuum programme to run until the display screen shows between 88-98 kPa (26-29 Hg).
6. Press Pause.
7. Press Main Menu.
8. Press Scroll Menu.
9. Press Oil Flush.
10. Press Next.
11. Enter 03:00 (for a three minute flush) and press Start.
12. The ACR2000 will now flush the service hoses for three minutes and then recover the refrigerant
13. Close the ACR2000 service hose couplers and remove the GE-48800-50 hose flush adapter.
14. The ACR2000 can now be connected to the hybrid vehicle to perform the A/C system diagnostic or service procedures.

Note: Flushing with the ACR 2000 is not intended to remove metal from the A/C system.

Flushing is intended to remove the following contaminants:

- Contaminated polyolester (POE) oil
- Desiccant, following a desiccant bag failure
- Overcharge of POE oil
- Refrigerant contamination

Note: Warmer engine or ambient temperature decreases the refrigerant recovery time during the A/C flush procedure.

1. Recover the refrigerant. Refer to Refrigerant Recovery and Recharging : High Voltage Electric Compressor .
2. Remove the air conditioning refrigerant desiccant. Refer to Air Conditioning Refrigerant Desiccant Replacement .
3. Remove the air conditioning refrigerant desiccant plug from the desiccant cartridge.
4. Install the air conditioning refrigerant desiccant plug without the desiccant cartridge.
5. Remove the evaporator thermal expansion valve. Refer to Air Conditioning Evaporator Thermal Expansion Valve Replacement : Drive Motor Battery Coolant Cooler → A/C Evaporator
6. Install GE-45268-115 to the evaporator.
7. Remove the drive motor battery cooler thermal expansion valve. Refer to Air Conditioning Evaporator Thermal Expansion Valve Replacement : Drive Motor Battery Coolant Cooler → A/C Evaporator

8. Install another GE-45268-115 to the drive motor battery cooler.
9. Install A/C evaporator tube to both GE-45268-115.
10. Install A/C evaporator TXV tube to both GE-45268-115 using an oversized seal washer.
11. Remove the A/C and drive motor battery cooling compressor. Refer to Air Conditioning and Drive Motor Battery Cooling Compressor Replacement
12. Inspect the end of the suction hose for a suction screen.
13. Remove the suction screen, if installed.
14. Install GE-45268-4 to the A/C compressor suction hose.
15. Install GE-452688-5 to the A/C compressor discharge hose.

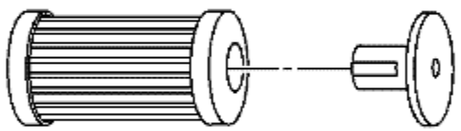

16. Forward flow refrigerant flushing is recommended for contaminated refrigerant or POE oil.
17. Perform the following procedure:

    Note: The filter inside the GE-45268-1 is serviceable. Remove and discard the check valve from the filter.

    17.1. Service the filter with ACDelco P/N GF 470 before each flush.

    Connect the GE-45268-1 flush filter to the suction port of the GE-45268-4 flush adapter.

    17.2. Connect the blue hose from the *GE-48800* ACR 2000 Air Conditioning Service Centre to the J 45268-1 flush filter adapter.
    17.3. Connect the red hose from the *GE-48800* ACR 2000 Air Conditioning Service Centre to the GE-45268-5 flush adapter.
18. Reverse flow refrigerant flushing is recommended for desiccant cartridge failure.

    Note: The filter inside the J 45268-1 is serviceable. Remove and discard the check valve from the filter.

    18.1. Service the filter with AC P/N GF 470, before each flush. Connect the J 45268-1 flush filter to the discharge port of the GE-45268-5 flush adapter.
    18.2. Connect the blue hose from the *GE-48800* ACR 2000 Air Conditioning Service Centre to the J 45268-1 flush filter adapter.
    18.3. Connect the red hose from the *GE-48800* ACR 2000 Air Conditioning Service Centre to the suction port of the GE-45268-4 flush adapter.

Note: Close the valve on the external refrigerant tank, before starting the flush process.

19. Flush the front A/C system. Follow the instructions supplied with the *GE-48800* ACR 2000 Air Conditioning Service Centre .

    Note: Close the valve on the external refrigerant tank, before starting the flush process.

20. Flush the A/C system. Follow the instructions supplied with the *GE-48800* ACR 2000 Air Conditioning Service Centre
21. Remove the GE-45268-4 from the A/C compressor suction hose.
22. Remove the GE-45268-5 from the A/C compressor discharge hose.

    Note: Flushing will remove all the POE oil from the A/C system.

    The A/C system must be replenished with the correct amount of POE oil.

23. If the removed A/C compressor is being reinstalled, perform the following procedure:
    - Drain the POE oil from the A/C compressor.
    - Add the total system capacity of POE oil to the A/C compressor. Refer to Refrigerant System Specifications .
24. If you will replace the A/C compressor after flushing the system, perform the following procedure:
    24.1. Refer to the Refrigerant System Specifications .
    24.2. DO NOT drain the new POE oil from the compressor.
    24.3. Deduct the amount of POE oil shipped with the service compressor from the amount of POE oil listed in the capacities table. Refer to Refrigerant System Specifications .
    24.4. Add the calculated amount to the compressor, as needed.
25. Install the air conditioning and drive motor battery cooling compressor. Refer to Air Conditioning and Drive Motor Battery Cooling Compressor Replacement

    Note: Flushing will remove the fluorescent leak detection dye from the A/C system.

26. Replace the air conditioning refrigerant desiccant. Refer to Air Conditioning Refrigerant Desiccant Replacement .

    Note: The air conditioning refrigerant desiccant is manufactured with POE fluorescent leak detection dye wafer inside.

27. Remove A/C evaporator TXV tube from both GE-45268-115.
28. Remove A/C evaporator tube from both GE-45268-115.
29. Remove both GE-45268-115.
30. Install the drive motor battery cooler thermal expansion valve. Refer to Air Conditioning Evaporator Thermal Expansion Valve Replacement : Drive Motor Battery Coolant Cooler → A/C Evaporator
31. Install the evaporator thermal expansion valve. Refer to Air Conditioning Evaporator Thermal Expansion Valve Replacement : Drive Motor Battery Coolant Cooler → A/C Evaporator
32. Evacuate and recharge the A/C system. Refer to Refrigerant Recovery and Recharging : High Voltage Electric Compressor
33. Leak test the fittings using *GE-42220* Universal 12V Leak Detection Lamp

&#169© Copyright Chevrolet. All rights reserved

Air Conditioning and Drive Motor Battery Cooling Compressor Replacement

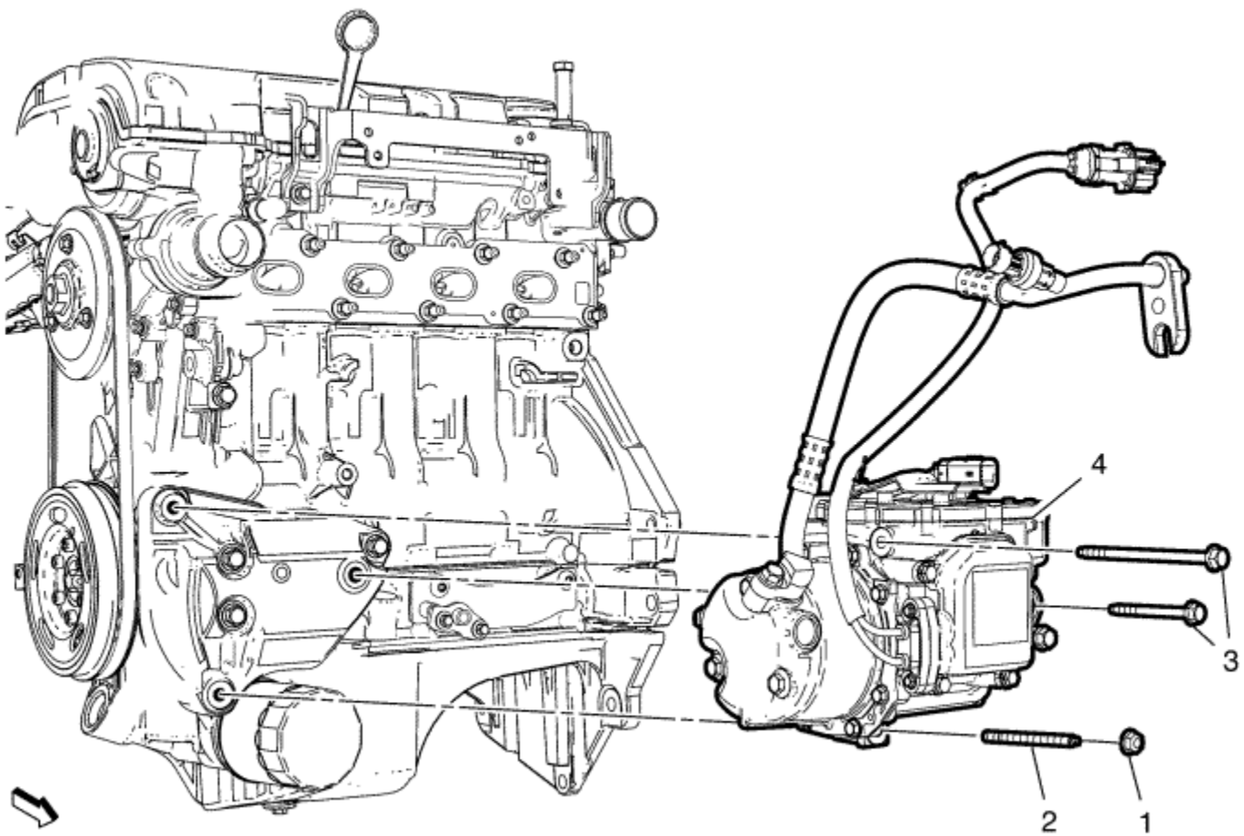

Callout	Component Name
Danger: Always perform the High Voltage Disabling procedure prior to servicing any High Voltage component or connection. Personal Protection Equipment (PPE) and proper procedures must be followed. The High Voltage Disabling procedure will perform the following tasks:	

- Identify how to disable high voltage.
- Identify how to test for the presence of high voltage.
- Identify conditions under which high voltage is always present and personal protection equipment (PPE) and proper procedures must be followed.

Failure to follow the procedures exactly as written may result in serious injury or death.

Danger: This A/C system's high voltage A/C Compressor uses Polyolester (POE) refrigerant oil. Use of any refrigerant oil other than POE may result in compressor failure and/or loss of high voltage isolation which may result in serious danger or death. For applicable equipment please refer to TIS Newsletter/repair equipment information.

Preliminary Procedure

1. Disable hybrid high voltage system. Refer to High Voltage Disabling and High Voltage Enabling .
2. Recover the refrigerant. Refer to Refrigerant Recovery and Recharging : High Voltage Electric Compressor .
3. Raise and support the vehicle. Refer to Lifting and Jacking the Vehicle .
4. Remove the air conditioning compressor and evaporator hose from air conditioning compressor front. Refer to Air Conditioning Compressor and Evaporator Hose Replacement .
5. Remove the exhaust manifold with catalytic converter. Refer to Exhaust Manifold with Catalytic Converter Replacement .
6. Remove the air conditioning compressor front hose. Refer to Air Conditioning Compressor Front Hose Replacement .
7. Disconnect the electrical connectors from the air conditioning and drive motor cooling compressor. Refer to High Voltage Connectors .

1	Air Conditioning and Drive Motor Cooling Compressor Nut **Caution:** Refer to Fastener Caution in the Preface section. **Tighten** 22 N·m (16 lb ft)
2	Air Conditioning and Drive Motor Cooling Compressor Stud **Tighten** 10 N·m (89 lb in)
3	Air Conditioning and Drive Motor Cooling Compressor Bolts (Qty: 2) **Tighten** 22 N·m (16 lb ft)
4	Air Conditioning and Drive Motor Cooling Compressor **Procedure** 1. Remove the air conditioning compressor and condenser hose from the air conditioning and drive motor cooling compressor. Refer to Air Conditioning Compressor and Condenser Hose Replacement . 2. A/C compressor oil balancing is not required. The service A/C compressor contains enough oil; however, add any oil that was removed during the A/C system

recovery process. Refer to Refrigerant Recovery and Recharging : High Voltage Electric Compressor .

3. Reprogramme the A/C compressor. Refer to Air Conditioning Compressor Control Module Programming and Setup .

&#169© Copyright Chevrolet. All rights reserved

Air Conditioning Compressor and Condenser Hose Replacement

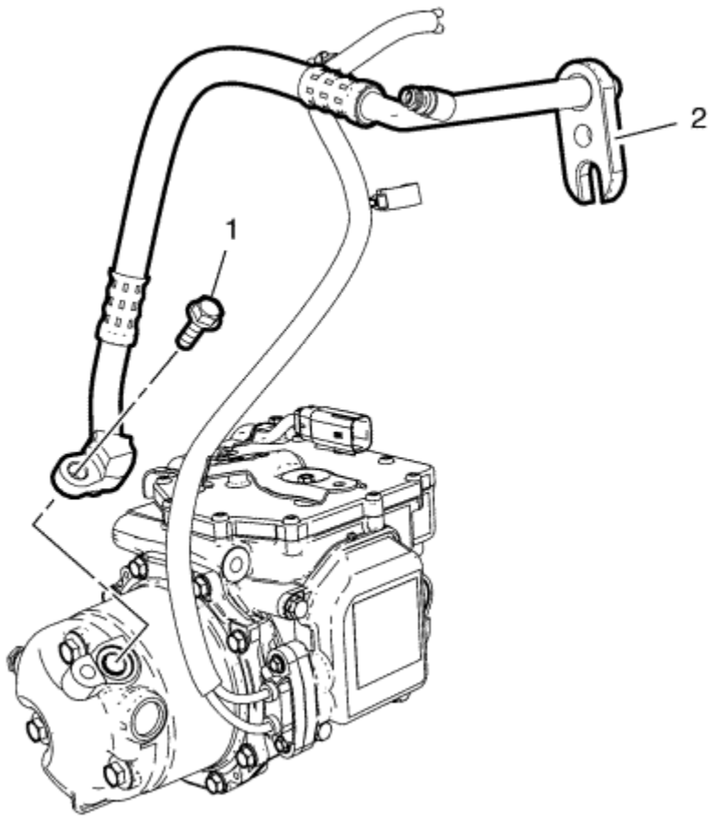

Callout	Component Name
Preliminary Procedure Remove the air conditioning and drive motor battery cooling compressor. Refer to Air Conditioning and Drive Motor Battery Cooling Compressor Replacement .	
	Air Conditioning Compressor and Condenser Hose Bolt

1	**Caution:** Refer to Fastener Caution in the Preface section. **Tighten** 22 N·m (16 lb ft)
2	Air Conditioning Compressor and Condenser Hose

© Copyright Chevrolet. All rights reserved

Air Conditioning Compressor Front Hose Replacement

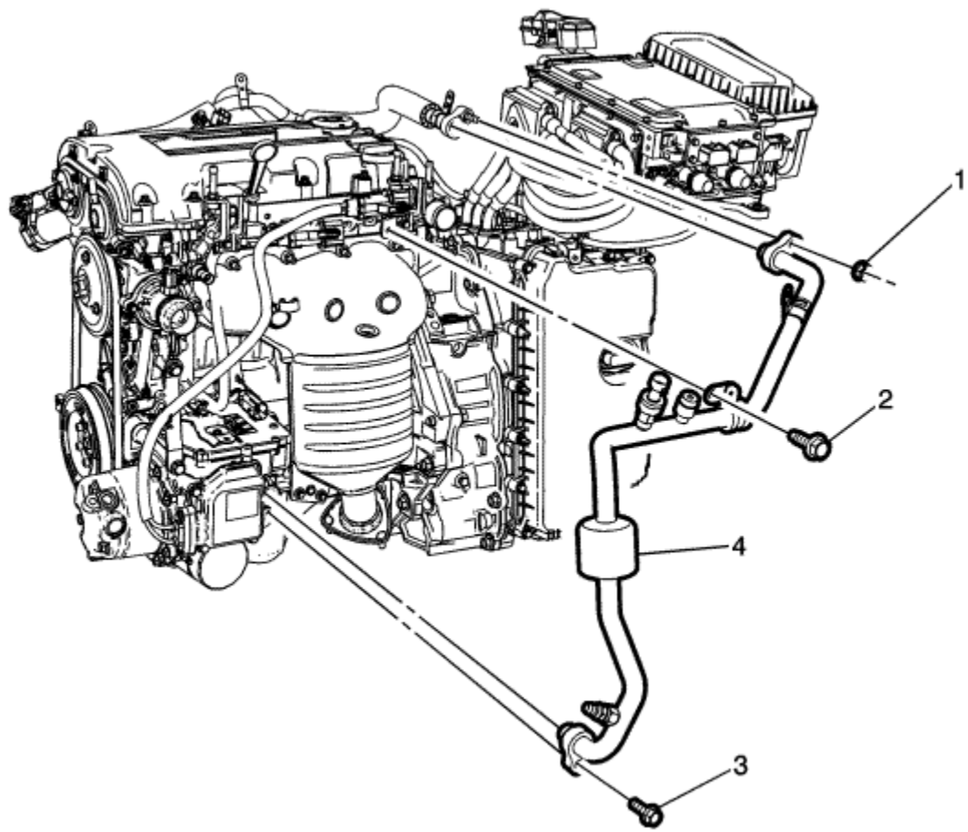

Callout	Component Name

Preliminary Procedure

1. Disconnect the battery negative cable. Refer to Battery Negative Cable Disconnection and Connection .
2. Recover the refrigerant. Refer to Refrigerant Recovery and Recharging : High Voltage Electric Compressor .
3. Remove the air cleaner resonator outlet duct. Refer to Air Cleaner Resonator Outlet Duct Replacement .

4. Raise and support the vehicle. Refer to Lifting and Jacking the Vehicle .
5. Disconnect the electrical connectors.
6. Remove any wires connected to the air conditioning compressor front hose.

1	Air Conditioning Compressor Front Hose Nut **Caution:** Refer to Fastener Caution in the Preface section. **Tighten** 22 N·m (16 lb ft)
2	Air Conditioning Compressor Front Hose Bolt **Tighten** 17 N·m (13 lb ft)
3	Air Conditioning Compressor Front Hose Bolt **Tighten** 22 N·m (16 lb ft)
4	Air Conditioning Compressor Front Hose

© Copyright Chevrolet. All rights reserved

Air Conditioning Compressor and Evaporator Hose Replacement

Removal Procedure

1. Recover the refrigerant. Refer to Refrigerant Recovery and Recharging : High Voltage Electric Compressor
2. Remove the throttle body. Refer to Throttle Body Assembly Replacement .
3. Remove wire retainers from air conditioning compressor and evaporator hose.
4. Disconnect the EVAP purge solenoid hose from the purge solenoid and reposition. Refer to Plastic Collar Quick Connect Fitting Service .

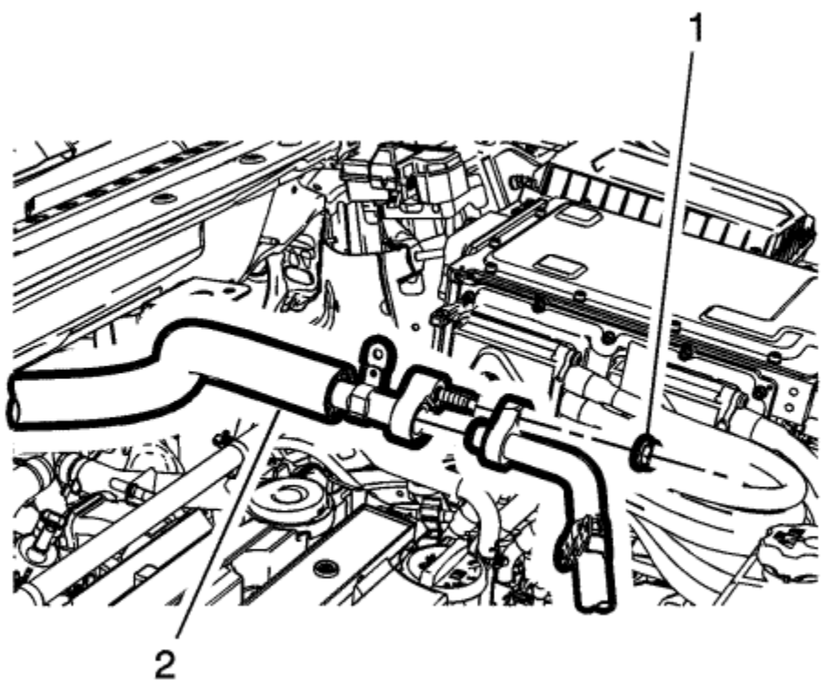

5. Remove the air conditioning compressor and evaporator hose nut (1) at air conditioning compressor front hose.
6. Remove the air conditioning compressor and evapoprator hose (2) from air conditioning compressor front hose.

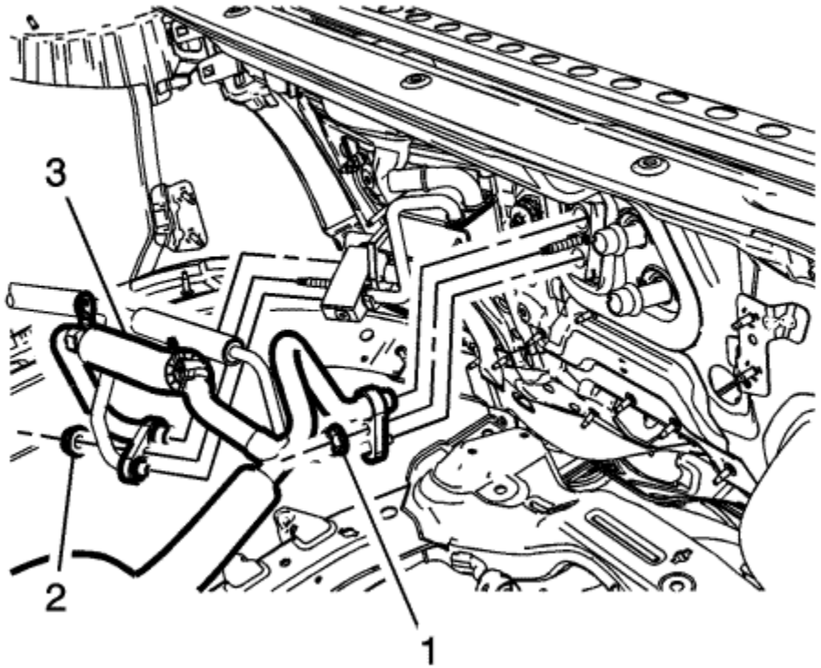

7. Remove the air conditioning compressor and evaporator hose nut (1) at the air conditiong evaporator.
8. Remove the air conditioning compressor and evaporator hose nut (2) at the drive motor battery coolant cooler
9. Remove the air conditioning compressor and evaporator hose (3) from the vehicle.

Installation Procedure

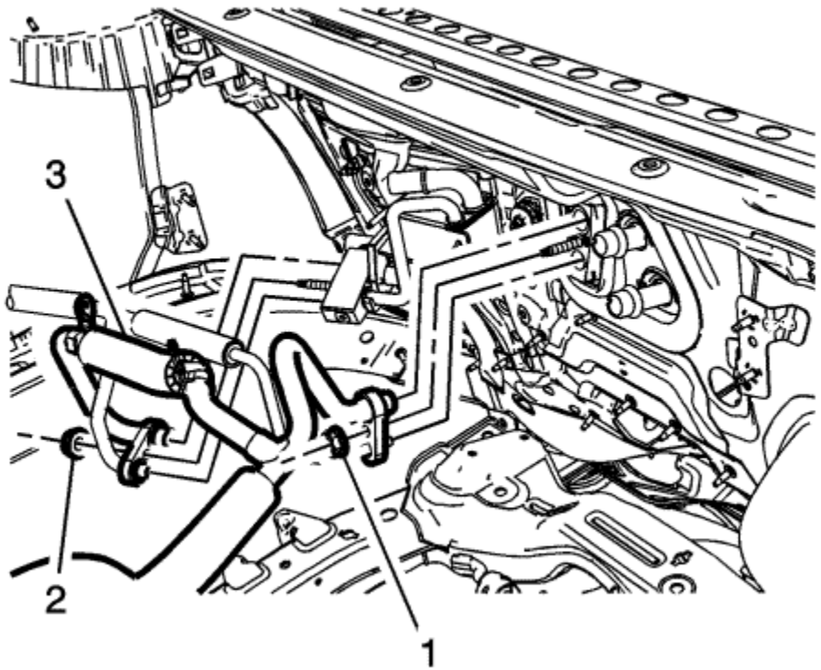

1. Install the air conditioning compressor and evaporator hose (3) to the vehicle.

   Caution: Refer to Fastener Caution in the Preface section.

2. Install the air conditioning compressor and evaporator hose nut (2) at the drive motor battery coolant cooler and tighten to **17 N·m (13 lb ft)**
3. Install the air conditioning compressor and evaporator hose nut (1) at the air conditioning evaporator and tighten to **17 N·m (13 lb ft)**.

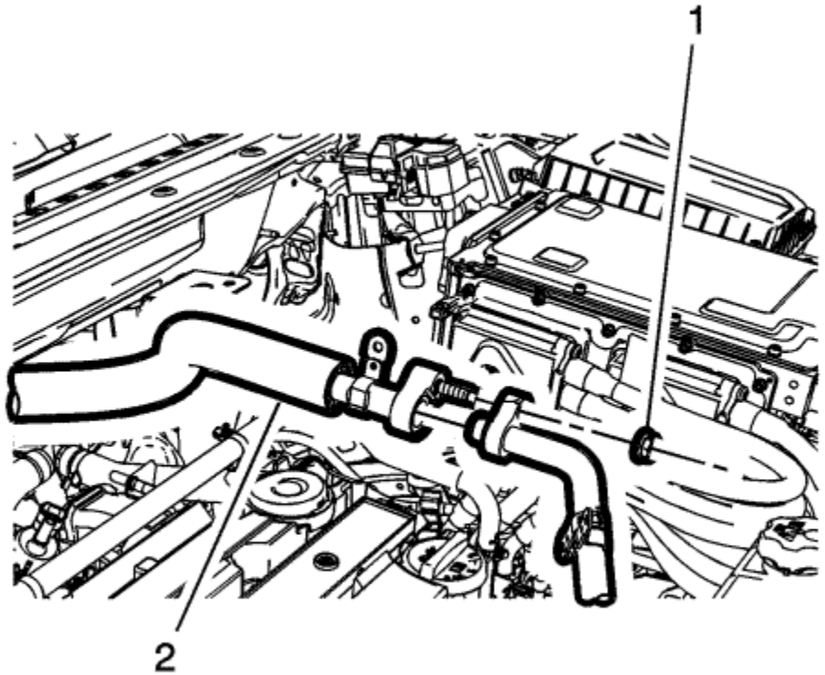

4. Install the air conditioning compressor and evaporator hose (2) to air conditioning compressor front hose.
5. Install the air conditioning compressor and evaporator hose nut (1) at air conditioning compressor front hose and tighten to **22 N·m (16 lb ft)**.
6. Connect the EVAP purge solenoid hose from the purge solenoid. Refer to Plastic Collar Quick Connect Fitting Service .
7. Install wire retainers from air conditioning compressor and evaporator hose.
8. Install the throttle body. Refer to Throttle Body Assembly Replacement .
9. Evacuate and charge the refrigerant system. Refer to Refrigerant Recovery and Recharging : High Voltage Electric Compressor .

© Copyright Chevrolet. All rights reserved

Air Conditioning Evaporator Thermal Expansion Valve Tube Replacement

Removal Procedure

1. Disconnect the battery negative cable. Refer to Battery Negative Cable Disconnection and Connection .
2. Recover the refrigerant. Refer to Refrigerant Recovery and Recharging : High Voltage Electric Compressor .
3. Remove the air cleaner assembly. Refer to Air Cleaner Assembly Replacement .
4. Remove the coolant recovery reservoir. Refer to Coolant Recovery Reservoir Replacement .
5. Remove the right headlamp. Refer to Headlamp Replacement : Volt → Ampera .
6. Disconnect electrical connectors and wire retainers from air conditioning evaporator thermal expansion valve tube.

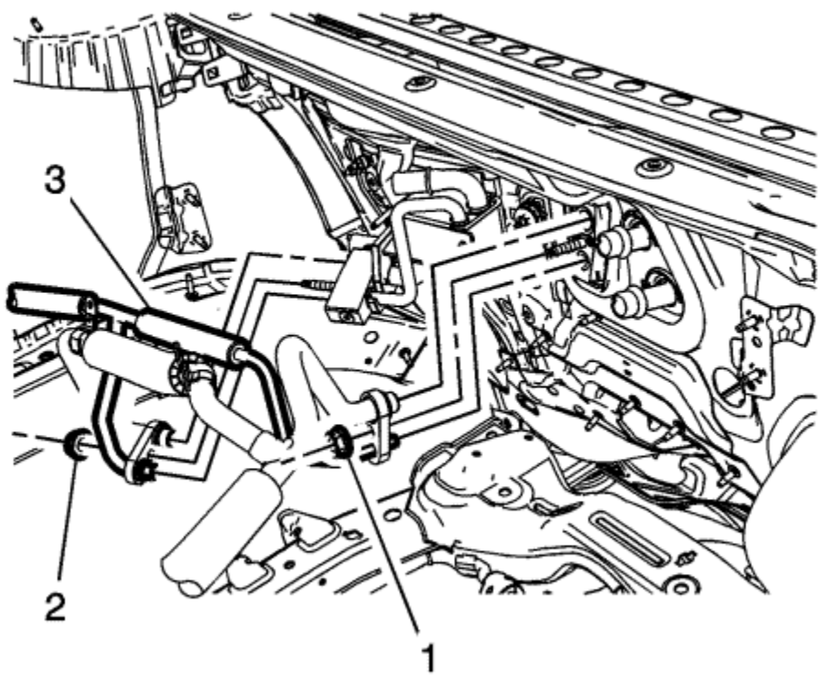

7. Remove the air conditioning evaporator thermal expansion valve tube nut (1) at air conditioning evaporator.
8. Remove the air conditioning evaporator thermal expansion valve tube nut (2) at the drive motor battery coolant cooler.
9. Remove the air conditioning evaporator thermal expansion valve tube (3) from the air conditioning evaporator and the drive motor battery coolant cooler.

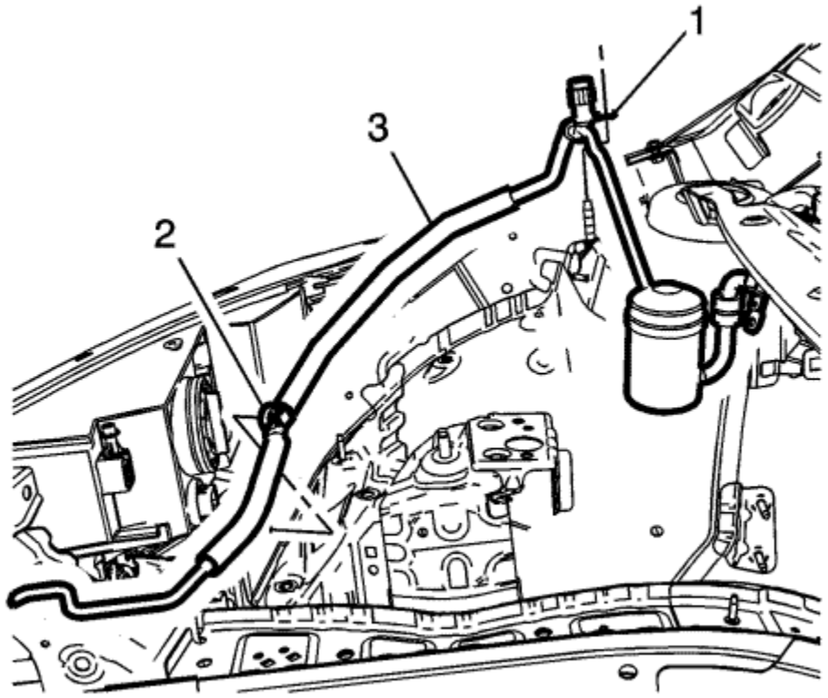

10. Remove the air conditioning evaporator thermal expansion valve tube clip (1) from the stud.
11. Remove the air conditioning evaporator thermal expansion valve tube retainer (2) from the body.
12. Remove the air conditioning evaporator thermal expansion valve tube (3).

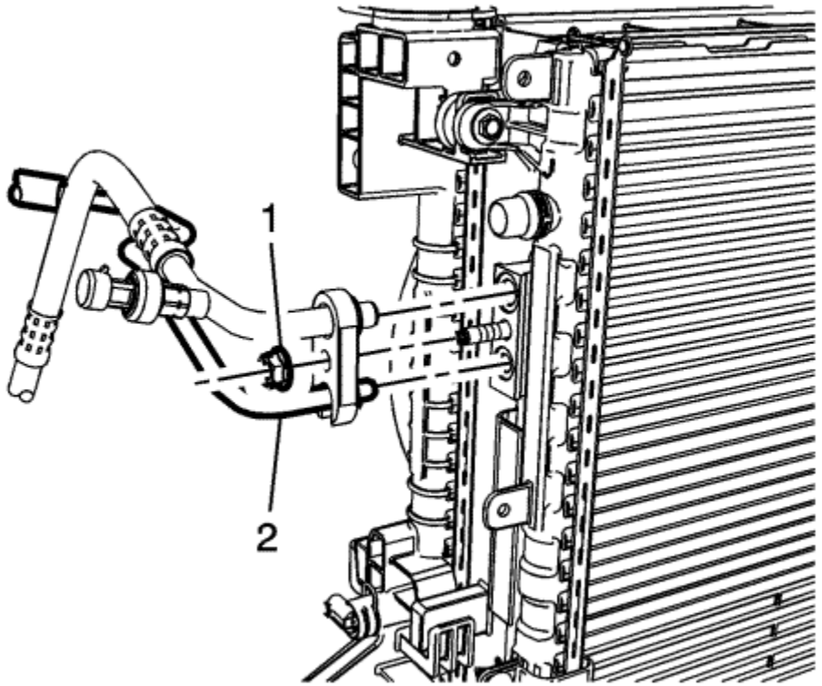

13. Remove the air conditioning evaporator thermal expansion valve tube nut (1) at the air conditioning condenser.
14. Remove the air conditioning evaporator thermal expansion valve tube (2) from the air conditioning condenser.
15. Remove the air conditioning evaporator thermal expansion valve tube from the vehicle.

Installation Procedure

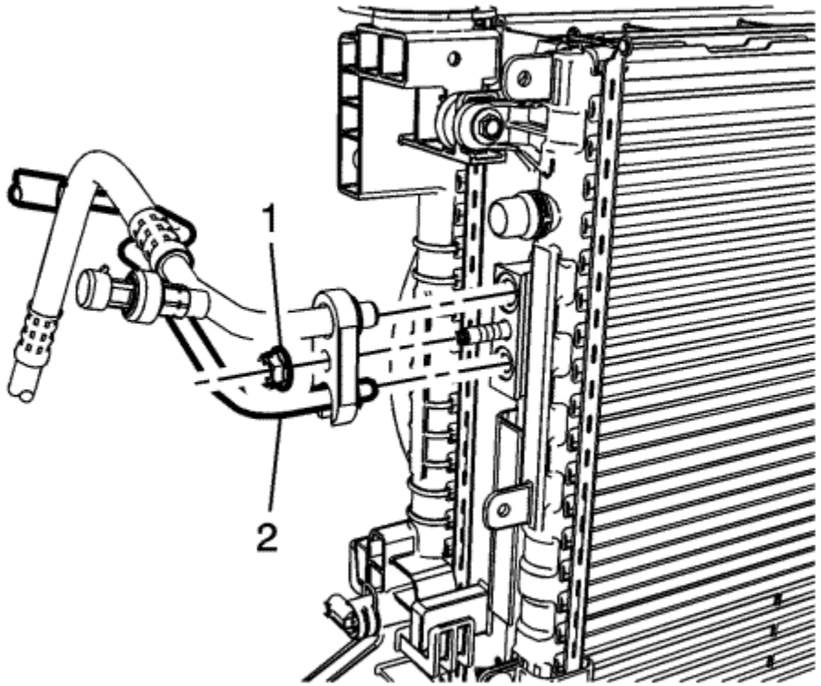

1. Install the air conditioning evaporator thermal expansion valve tube to the vehicle.
2. Install the air conditioning evaporator thermal expansion valve tube (2) from the air conditioning condenser.

   Caution: Refer to Fastener Caution in the Preface section.

3. Install the air conditioning evaporator thermal expansion valve tube nut (1) at the air conditioning condenser and tighten to **17 N·m (13 lb ft)**.

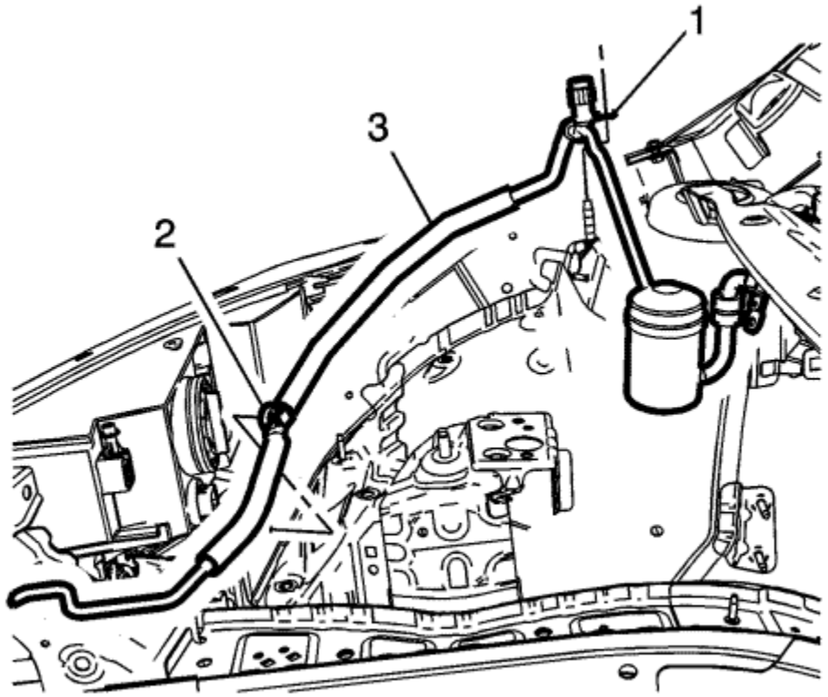

4. Install the air conditioning evaporator thermal expansion valve tube (3).
5. Install the air conditioning evaporator thermal expansion valve tube retainer (2) from the body.
6. Install the air conditioning evaporator thermal expansion valve tube clip (1) from the stud.

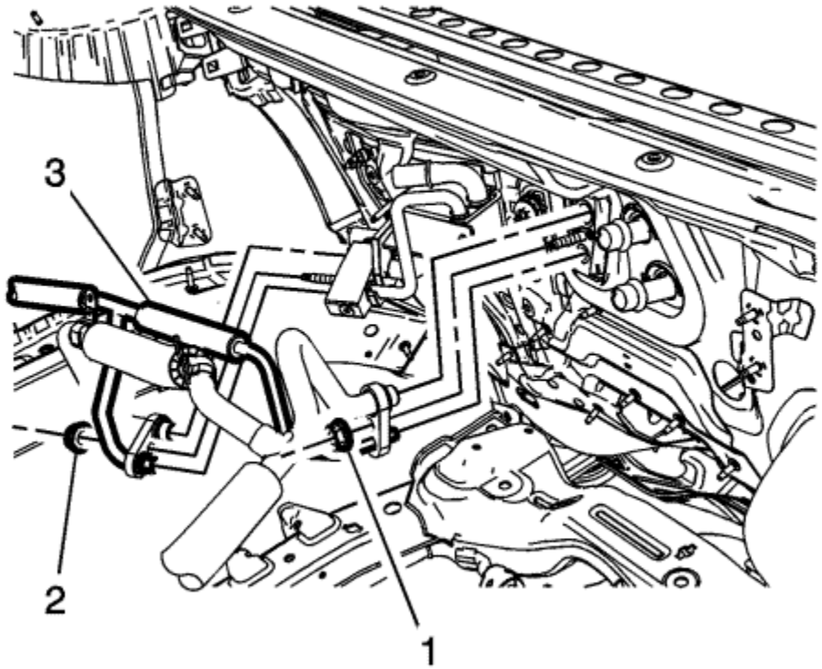

7. Install the air conditioning evaporator thermal expansion valve tube (3) from the air conditioning evaporator and the drive motor battery coolant cooler.
8. Install the air conditioning evaporator thermal expansion valve tube nut (2) at the drive motor battery coolant cooler and tighten to **17 N·m (13 lb ft)**.
9. Install the air conditioning evaporator thermal expansion valve tube nut (1) at air conditioning evaporator and tighten to **17 N·m (13 lb ft)**.
10. Connect electrical connectors and wire retainers from air conditioning evaporator thermal expansion valve tube.
11. Install the right headlamp. Refer to Headlamp Replacement : Volt → Ampera .
12. Install the coolant recovery reservoir. Refer to Coolant Recovery Reservoir Replacement .
13. Install the air cleaner assembly. Refer to Air Cleaner Assembly Replacement .
14. Evacuate and charge the refrigerant system. Refer to Refrigerant Recovery and Recharging : High Voltage Electric Compressor .
15. Connect the battery negative cable. Refer to Battery Negative Cable Disconnection and Connection .

© Copyright Chevrolet. All rights reserved

Air Conditioning Refrigerant Service Valve Core Replacement

Special Tools

- *GE-39400-A* Halogen Leak Detector
- *GE-46246* Valve Core Removal Tool

For equivalent regional tools, Refer to Special Tools

Removal Procedure

1. Recover the refrigerant. Refer to Refrigerant Recovery and Recharging : High Voltage Electric Compressor .

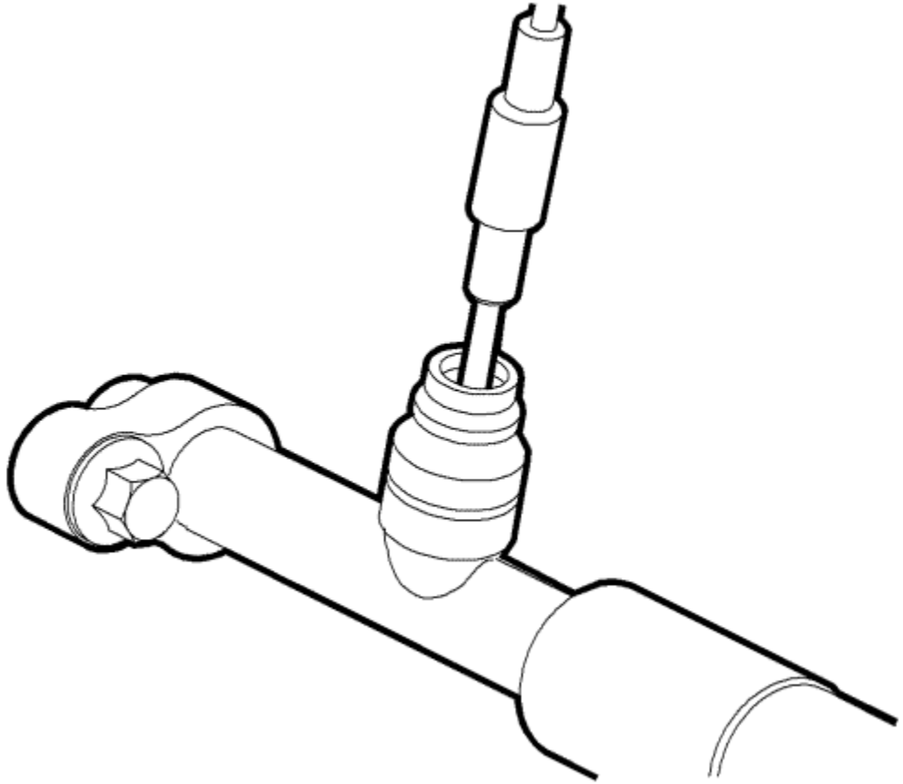

2. Use *GE-46246* Valve Core Removal Tool or equivalent to remove the valve core.

Installation Procedure

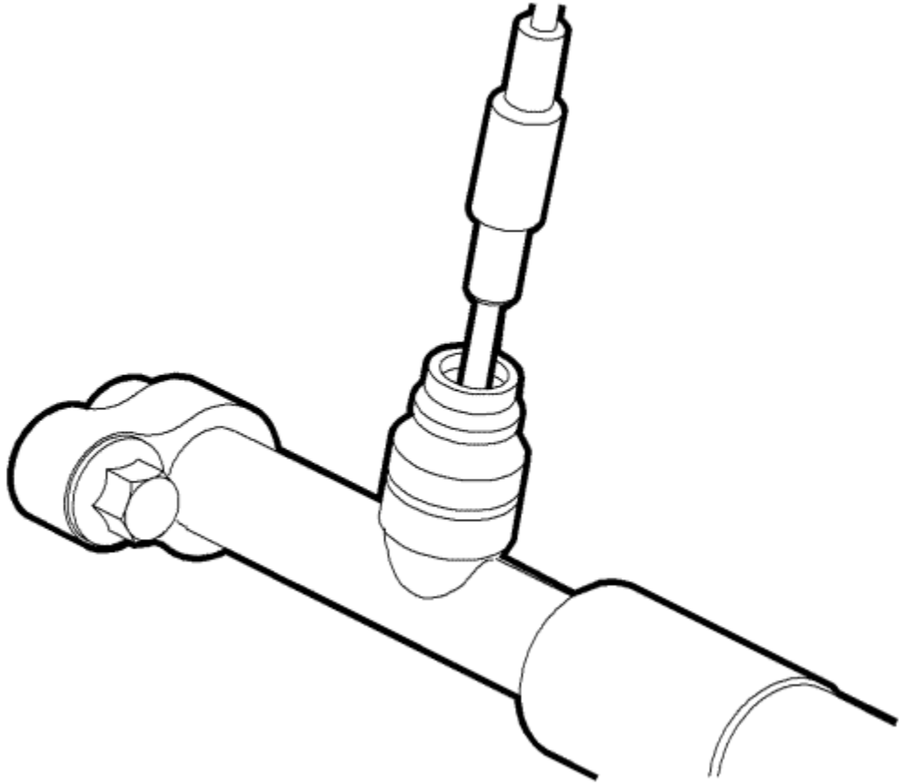

1. Use *GE-46246* Valve Core Removal Tool or equivalent to install and tighten the valve core.
2. Evacuate and charge the A/C system. Refer to Refrigerant Recovery and Recharging : High Voltage Electric Compressor .

   Note: To prevent loss of refrigerant charge, tighten the cap. Replace the cap if the seal is missing or damaged.

3. Test the affected A/C fittings for leaks using *GE-39400-A* Halogen Leak Detector .

&#169© Copyright Chevrolet. All rights reserved

Air Conditioning Refrigerant Desiccant Replacement

Special Tools

GE-39400-A Halogen Leak Detector

For equivalent regional tools, Refer to Special Tools

Removal Procedure

1. Recover the refrigerant. Refer to Refrigerant Recovery and Recharging : High Voltage Electric Compressor .
2. Remove the front wheelhouse front liner on the driver side. Refer to Front Wheelhouse Front Liner Replacement

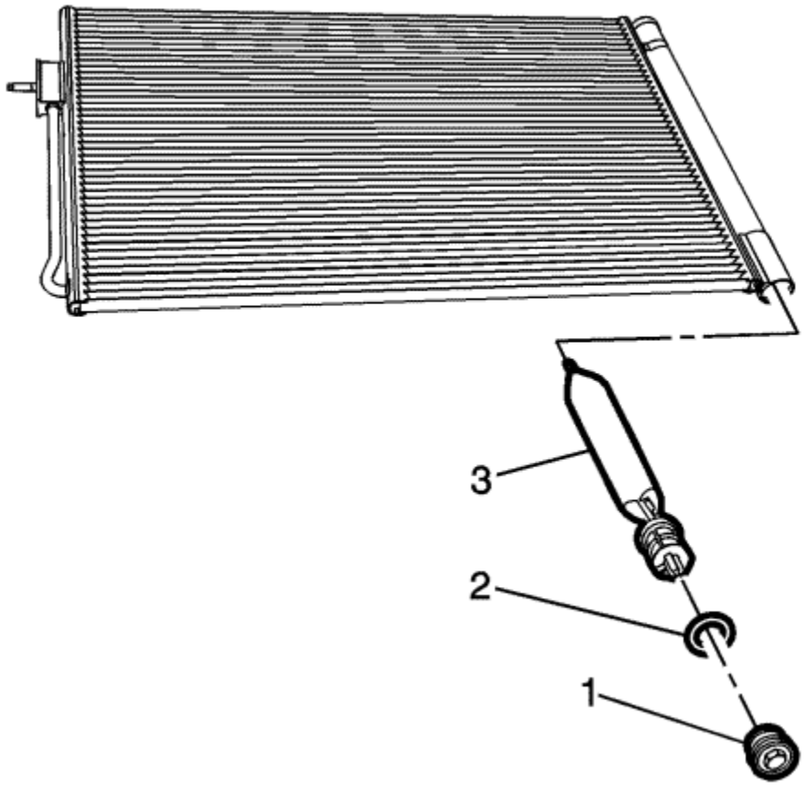

3. Remove the air conditioning receiver and dehydrator Plug (1)

   Note: Cap all A/C components immediately to prevent system contamination.

4. Remove and discard the sealing washers (2).
5. Remove the receiver and dehydrator (3) from the condenser.

Installation Procedure

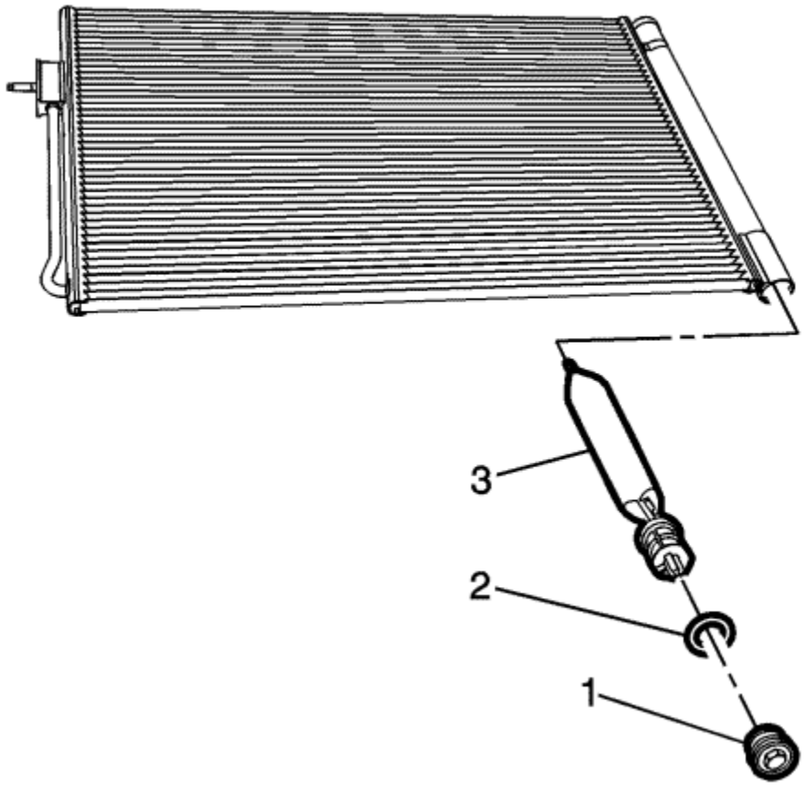

1. Install the receiver and dehydrator (3) in the condenser.
2. Install new sealing washers (2).
3. Install the air conditioning receiver and dehydrator Plug (1)
4. Install the front wheelhouse front liner on the driver side. Refer to Front Wheelhouse Front Liner Replacement
5. Evacuate and charge the refrigerant system. Refer to Refrigerant Recovery and Recharging : High Voltage Electric Compressor .
6. Leak test the fittings using the *GE-39400-A* Halogen Leak Detector

© Copyright Chevrolet. All rights reserved

Air Conditioning Evaporator Thermal Expansion Valve Replacement - A/C Evaporator

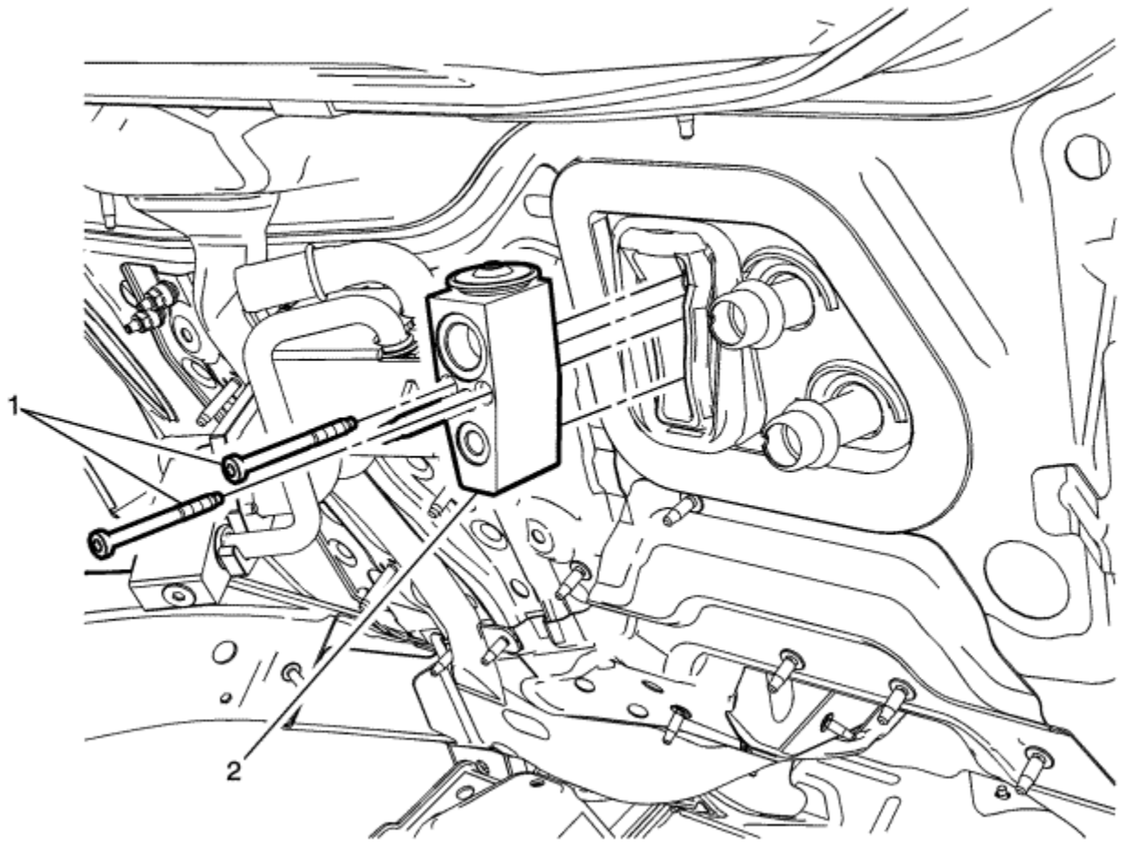

Callout	Component Name

Preliminary Procedure

1. Recover the refrigerant. Refer to Refrigerant Recovery and Recharging : High Voltage Electric Compressor
2. Remove the air cleaner resonator outlet duct. Refer to Air Cleaner Resonator Outlet Duct Replacement
3. Disconnect the air conditioning compressor and evaporator hose from the expansion valve. Refer to Air Conditioning Compressor and Evaporator Hose Replacement

4. Disconnect the air conditioning evaporator thermal expansion valve tube from the expansion valve.Refer to Air Conditioning Evaporator Thermal Expansion Valve Tube Replacement

1	Air Conditioning Thermal Expansion Valve Bolts (Qty: 2). **Caution:** Refer to Fastener Caution in the Preface section. **Tighten** 7 N·m (62 lb in)
2	Air Conditioning Thermal Expansion Valve

© Copyright Chevrolet. All rights reserved

Air Conditioning Evaporator Thermal Expansion Valve Replacement - Drive Motor Battery Coolant Cooler

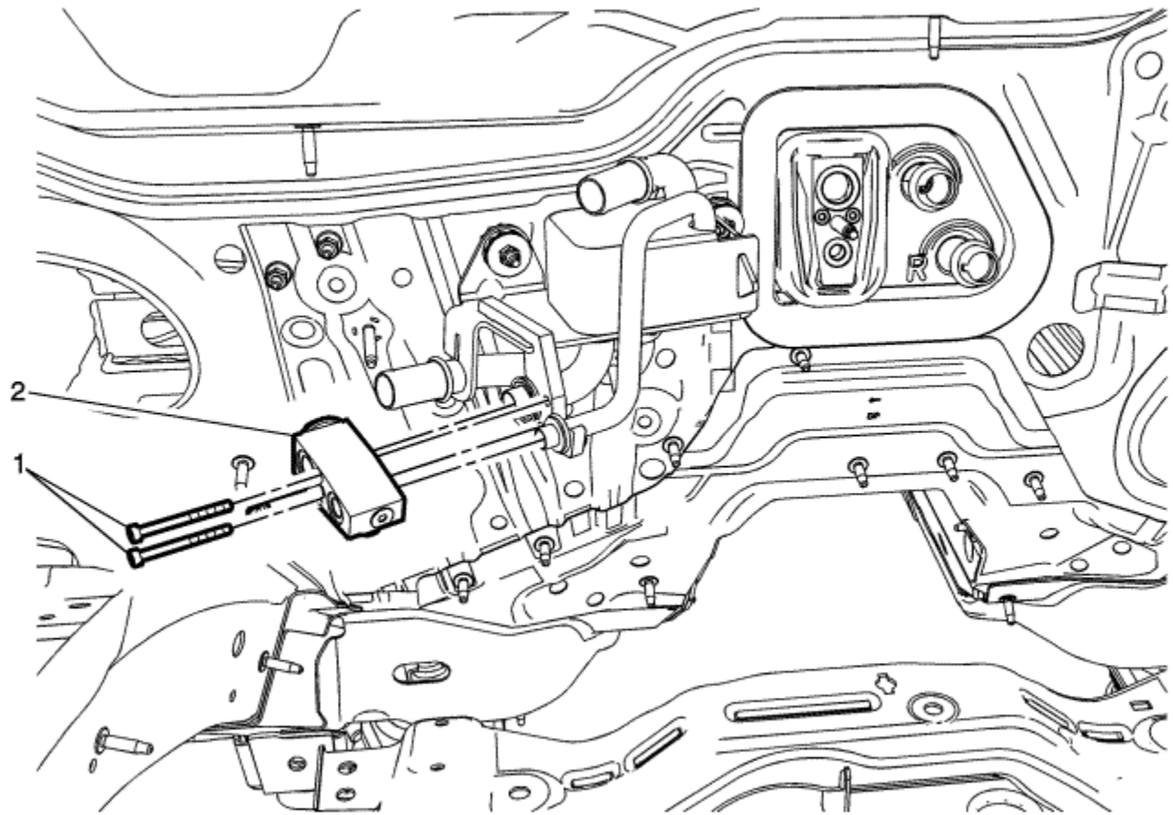

Callout	Component Name
Preliminary Procedure	

1. Recover the refrigerant. Refer to Refrigerant Recovery and Recharging : High Voltage Electric Compressor
2. Remove the air cleaner resonator outlet duct. Refer to Air Cleaner Resonator Outlet Duct Replacement
3. Remove the air conditioning compressor and evaporator hose. Refer to Air Conditioning Compressor and Evaporator Hose Replacement

4. Remove the air conditioning evaporator thermal expansion valve tube. Refer to Air Conditioning Evaporator Thermal Expansion Valve Tube Replacement

1	Air Conditioning Thermal Expansion Valve Bolts (Qty: 2). **Caution:** Refer to Fastener Caution in the Preface section. **Tighten** 7 N·m (62 lb in)
2	Air Conditioning Thermal Expansion Valve

© Copyright Chevrolet. All rights reserved

Air Conditioning Refrigerant Pressure Sensor Replacement - Low Pressure

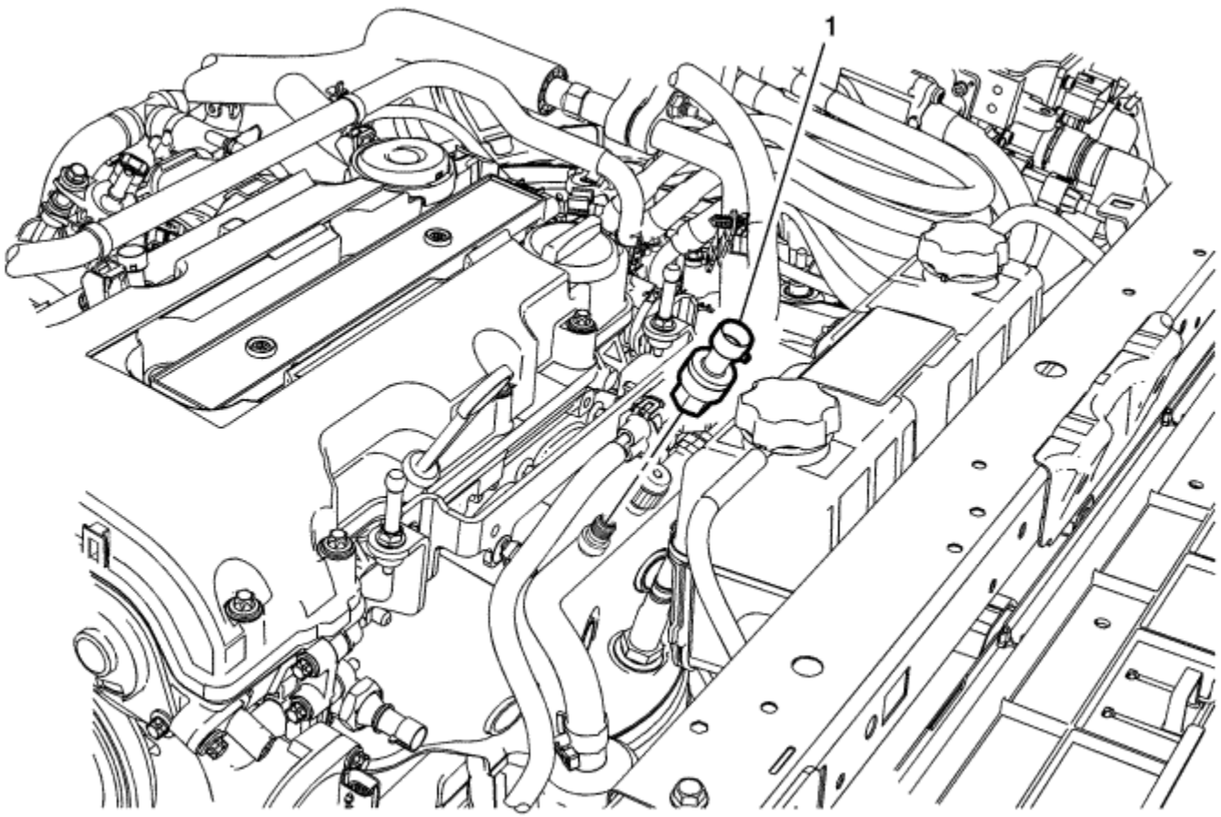

Callout	Component Name
Preliminary Procedure Disconnect the air conditioning refrigerant pressure sensor electrical connector.	
	Air Conditioning Refrigerant Pressure Sensor

1	**Caution:** Refer to Fastener Caution in the Preface section. **Tighten** 6 N·m (53 lb in)

© Copyright Chevrolet. All rights reserved

Air Conditioning Refrigerant Pressure Sensor Replacement - High Pressure

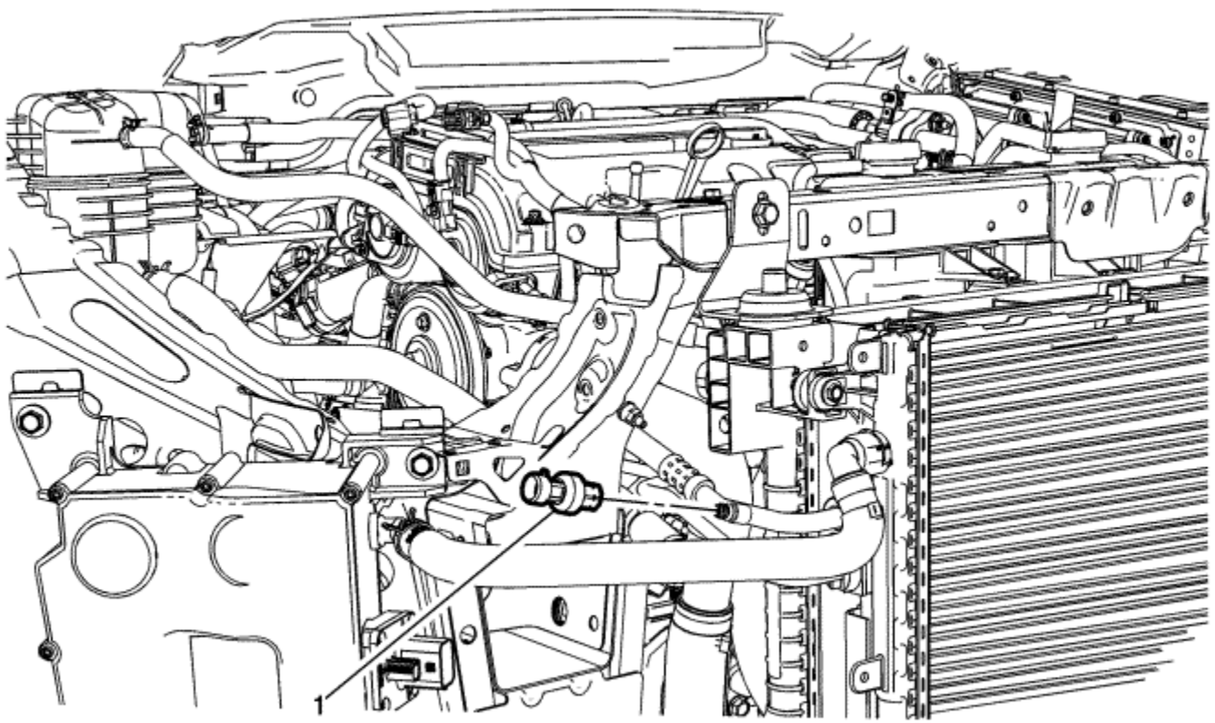

Callout	Component Name
Preliminary Procedure 1. Remove the right headlamp. Refer to Headlamp Replacement : Volt → Ampera 2. Disconnect the air conditioning refrigerant pressure sensor electrical connector.	

1	Air Conditioning Refrigerant Pressure Sensor **Caution:** Refer to Fastener Caution in the Preface section. **Tighten** 6 N·m (53 lb in)

© Copyright Chevrolet. All rights reserved

Air Conditioning Refrigerant Temperature Sensor Replacement

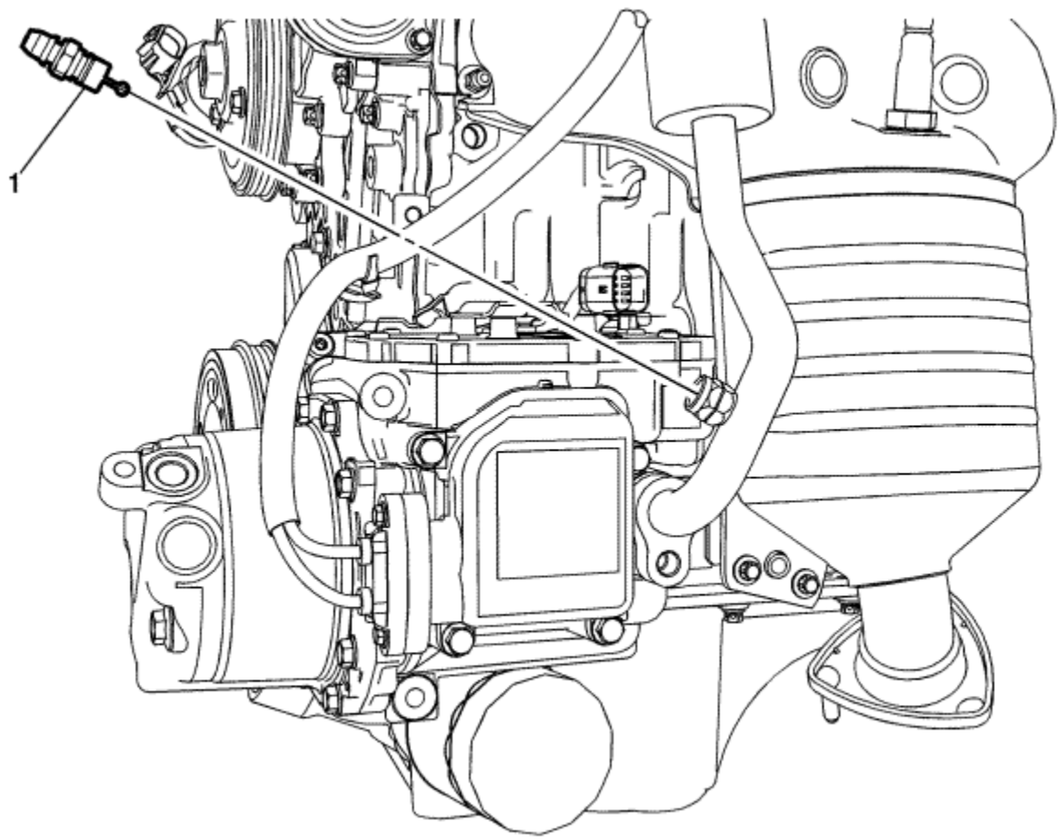

Callout	Component Name
Preliminary Procedure 1. Recover the refrigerant. Refer to Refrigerant Recovery and Recharging : High Voltage Electric Compressor . 2. Disconnect the air conditioning refrigerant temperature sensor electrical connector.	

1	Air Conditioning Refrigerant Temperature Sensor **Caution:** Refer to Fastener Caution in the Preface section. **Tighten** 6 N·m (53 lb in)

© Copyright Chevrolet. All rights reserved

Ambient Air Temperature Sensor Replacement

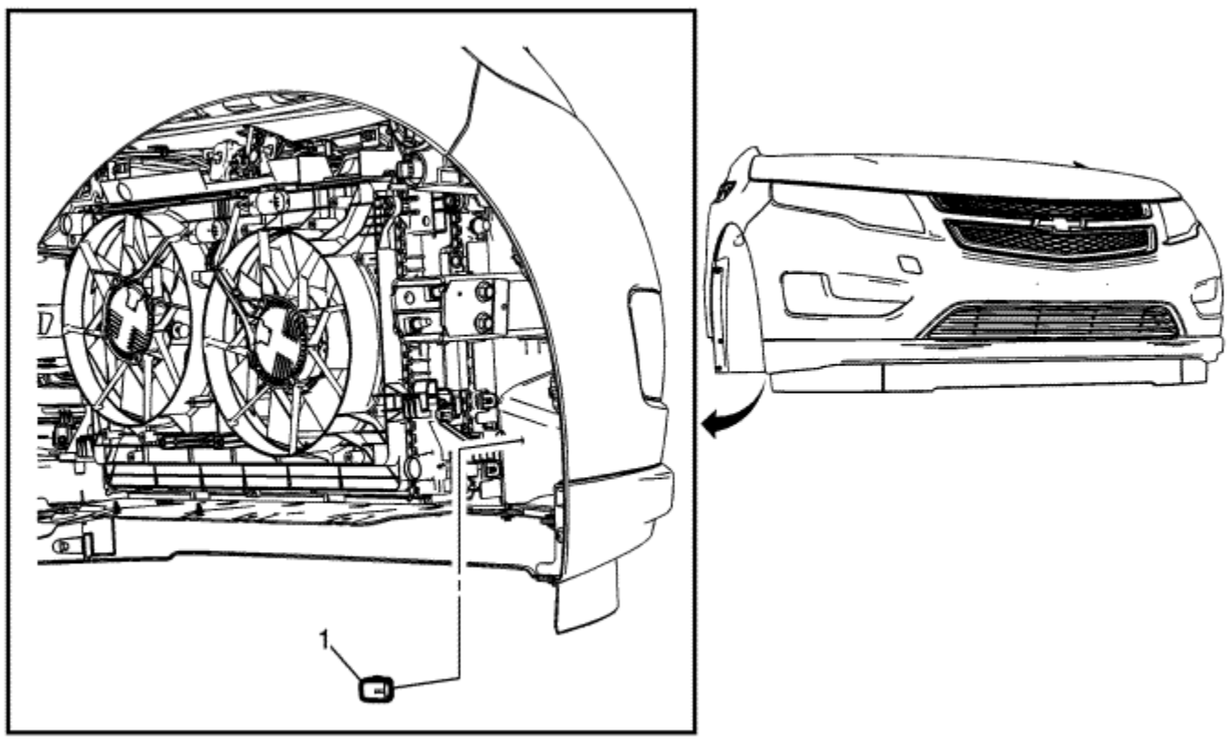

Callout	Component Name
Preliminary Procedure Remove The Front Right Side Wheelhouse Front Liner.. Refer to Front Wheelhouse Front Liner Replacement .	
	Ambient Air Temperature Sensor

1	**Procedure** 1. Disconnect the electrical connector. 2. Unsnap the temperature sensor from the air deflection/baffle.

© Copyright Chevrolet. All rights reserved

Air Conditioning Condenser Replacement

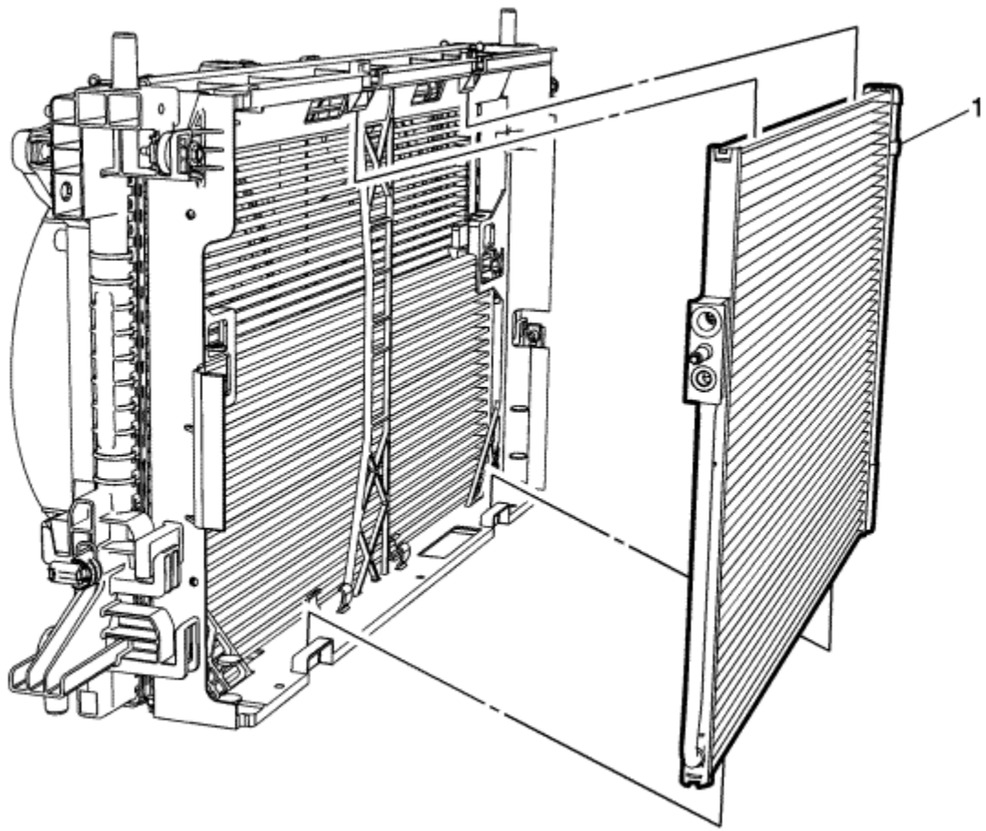

Callout	Component Name
Preliminary Procedure	

1. Recover the refrigerant. Refer to Refrigerant Recovery and Recharging : High Voltage Electric Compressor
2. Remove the drive motor battery coolant radiator. Refer to Drive Motor Battery Coolant Radiator Replacement
3. Remove the air conditioning compressor and condenser hose from condenser. Refer to Air Conditioning Compressor and Condenser Hose Replacement

4. Remove the air conditioning evaporator thermal expansion valve tube from the condenser. Refer to Air Conditioning Evaporator Thermal Expansion Valve Tube Replacement

1	Air Conditioning Condenser **Tip** Push in tabs to release condenser.

© Copyright Chevrolet. All rights reserved

Air Conditioning and Heater Module Assembly Removal and Installation

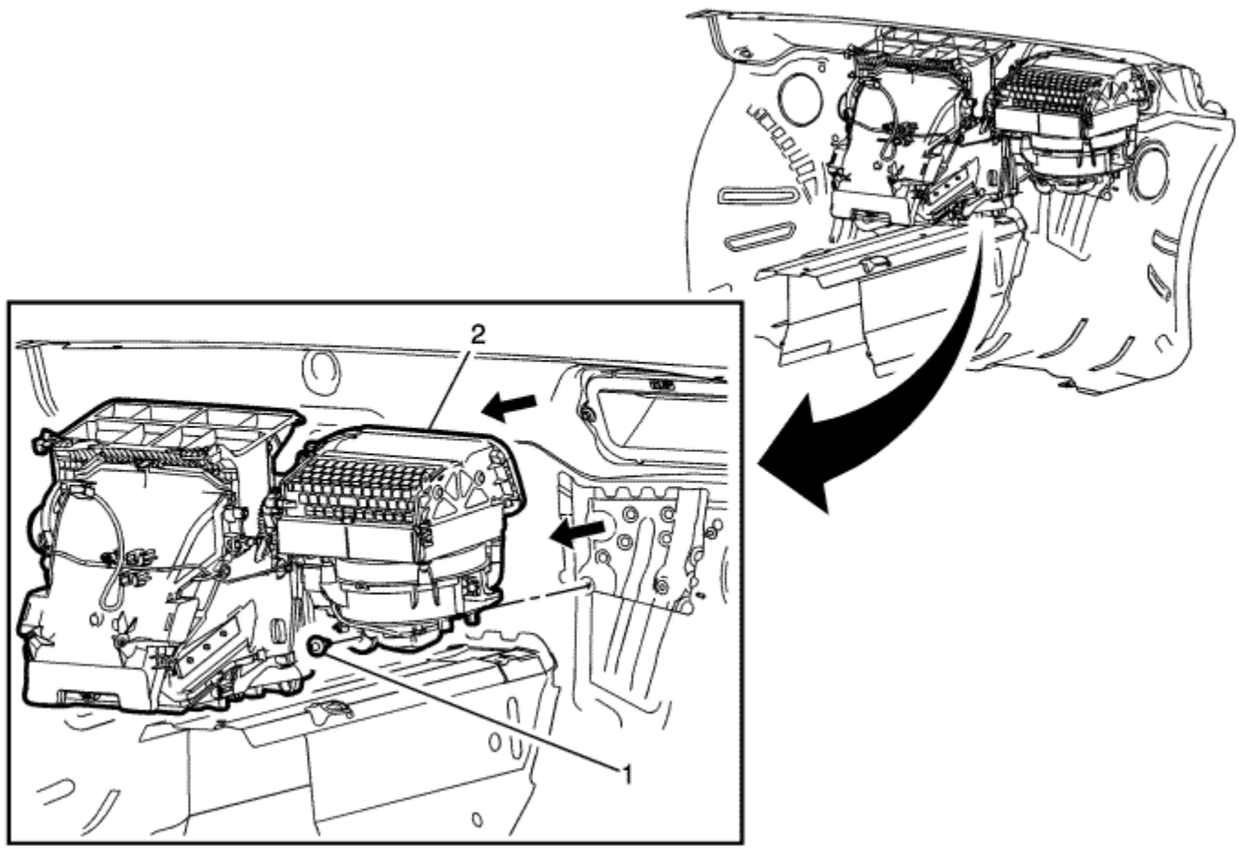

Callout	Component Name
Preliminary Procedures	

1. Recover the refrigerant. Refer to Refrigerant Recovery and Recharging : High Voltage Electric Compressor .
2. Drain the cooling system. Refer to Cooling System Draining and Filling .
3. Remove the instrument panel tie bar. Refer to Instrument Panel Tie Bar Replacement .

4. Disconnect the HVAC module electrical connectors.
5. Remove the air conditioning evaporator thermal expansion valve tube. Refer to Air Conditioning Evaporator Thermal Expansion Valve Tube Replacement .
6. Remove the heater water shutoff valve actuator inlet. Refer to Heater Water Shutoff Valve Actuator Inlet Hose Replacement .
7. Remove the heater inlet hose. Refer to Heater Inlet Hose Replacement .

1	HVAC Module Assembly Fastener (Qty: 1) **Caution:** Refer to Fastener Caution in the Preface section. **Tighten** 10 N·m (89 lb in)
2	Heater and Air Conditioning Evaporator and Blower Module

© Copyright Chevrolet. All rights reserved

Air Conditioning Evaporator Replacement

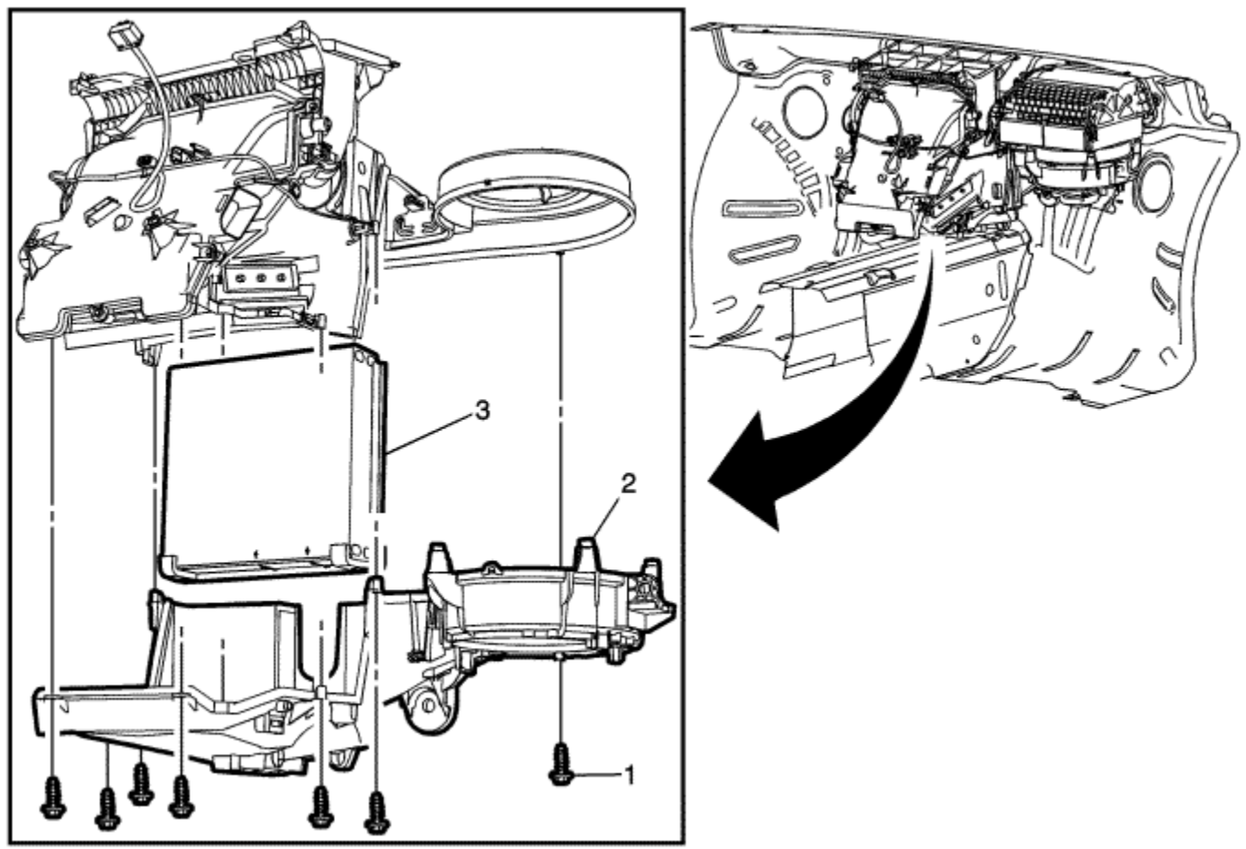

Callout	Component Name

Preliminary Procedures

1. Remove the heater and air conditioning evaporator and blower module. Refer to Air Conditioning and Heater Module Assembly Removal and Installation .
2. Remove the heater core. Refer to Heater Core Replacement .
3. Disconnect the heater and air conditioning evaporator and blower module assembly electrical connectors.

1	A/C Evaporator Fastener (Qty: 8) **Caution:** Refer to Fastener Caution in the Preface section.
2	Heater and Air Conditioning Evaporator and Blower Module Lower Case
3	Air Conditioning Evaporator Core

© Copyright Chevrolet. All rights reserved

Air Conditioning Evaporator and Blower Module Drain Hose Replacement

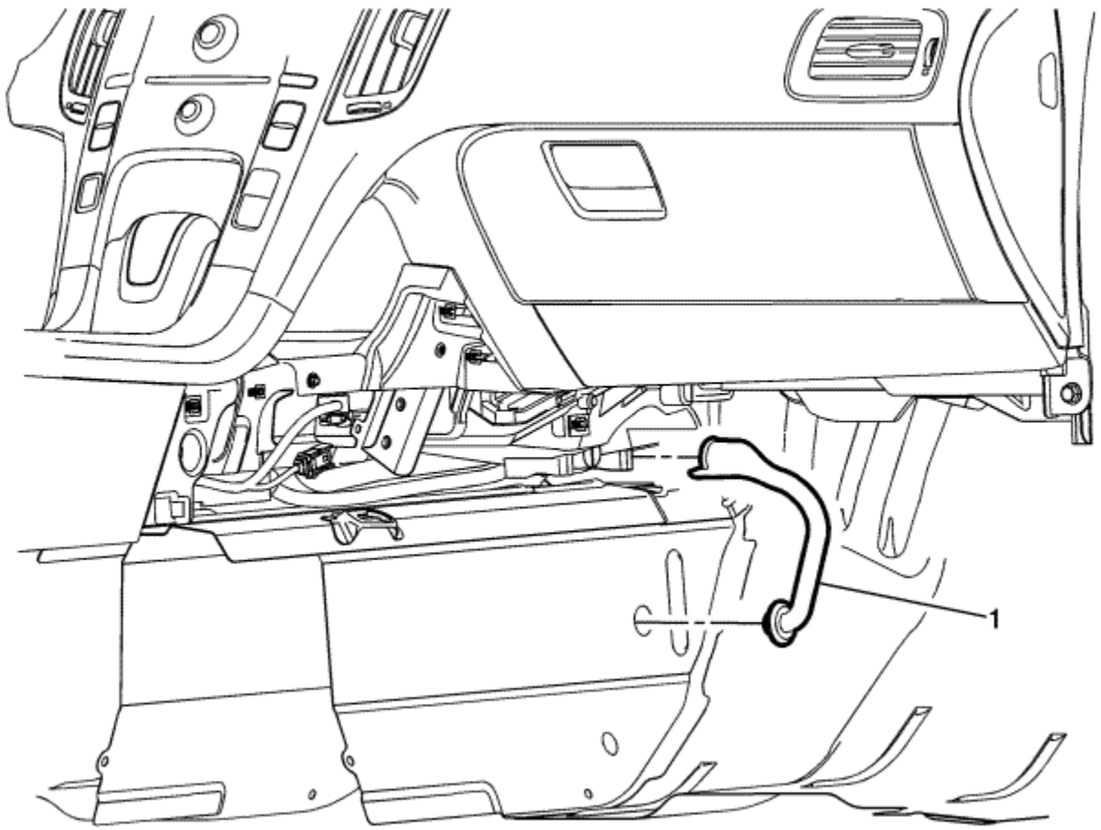

Callout	Component Name
Preliminary Procedure Remove Front Floor Console Extension Cover. Refer to Front Floor Console Extension Replacement - Right Side	
	Air Conditioning Evaporator and Blower Module Drain Hose

1	**Procedure** 1. Loosen the carpet in the range of the front floor console. 2. Release and pull off the drain hose from the HVAC module assembly and unsnap the drain fitting grommet from the front floor panel.

© Copyright Chevrolet. All rights reserved

Heater Inlet Hose Replacement

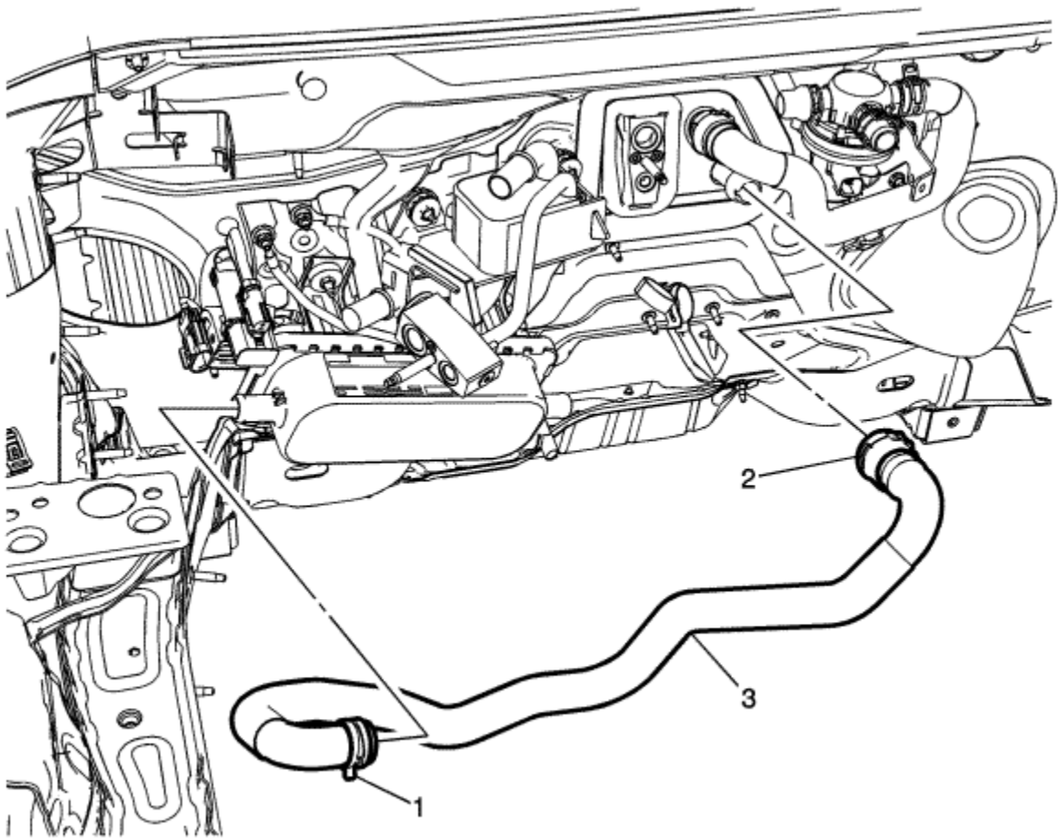

Callout	Component Name
Danger: Always perform the High Voltage Disabling procedure prior to servicing any High Voltage component or connection. Personal Protection Equipment (PPE) and proper procedures must be followed. The High Voltage Disabling procedure will perform the following tasks: Identify how to disable high voltage.	

-
- Identify how to test for the presence of high voltage.
- Identify conditions under which high voltage is always present and personal protection equipment (PPE) and proper procedures must be followed.

Failure to follow the procedures exactly as written may result in serious injury or death.

Preliminary Procedure

1. Disable the high voltage system. Refer to High Voltage Disabling and High Voltage Enabling .
2. Drain the coolant. Refer to Cooling System Draining and Filling .
3. Remove the air cleaner resonator outlet duct. Refer to Air Cleaner Resonator Outlet Duct Replacement .
4. Raise and support the vehicle. Refer to Lifting and Jacking the Vehicle .
5. Unclip from heater water auxiliary pump inlet hose.

1	Heater Inlet Hose Clamp **Procedure** Reposition the heater inlet hose clamp using *BO-38185* pliers **Special Tools** *BO-38185* Hose Clamp Pliers For equivalent regional tools, refer to Special Tools .
2	Heater Inlet Hose Quick Connect Fitting
3	Heater Inlet Hose **Note:** Replace corroded hose clamps and brackets.

&#169© Copyright Chevrolet. All rights reserved

Heater Inlet And Outlet Pipe Replacement

Special Tools

BO-38185 Hose Clamp Pliers

For equivalent regional tools, refer to Special Tools .

Removal Procedure

Danger: Always perform the High Voltage Disabling procedure prior to servicing any High Voltage component or connection. Personal Protection Equipment (PPE) and proper procedures must be followed.

The High Voltage Disabling procedure will perform the following tasks:

- Identify how to disable high voltage.
- Identify how to test for the presence of high voltage.
- Identify conditions under which high voltage is always present and personal protection equipment (PPE) and proper procedures must be followed.

Failure to follow the procedures exactly as written may result in serious injury or death.

1. Disable the high voltage system. Refer to High Voltage Disabling .
2. Disconnect the battery negative cable. Refer to Battery Negative Cable Disconnection and Connection .

Note: Replace corroded hose clamps and brackets.

3. Drain the cooling system. Refer to Cooling System Draining and Filling .
4. Remove the front wheelhouse front liner on passenger side. Refer to Front Wheelhouse Front Liner Replacement .

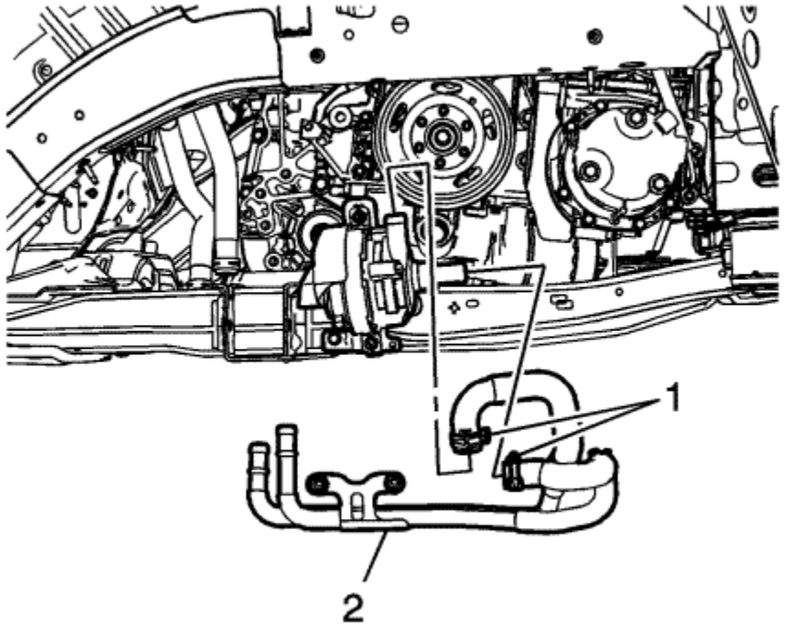

5. Remove the heater inlet and outlet pipe clamps (1) at heater water auxiliary pump using *BO-38185* pliers .
6. Remove the heater inlet and outlet pipe (2) from the heater water auxiliary pump.

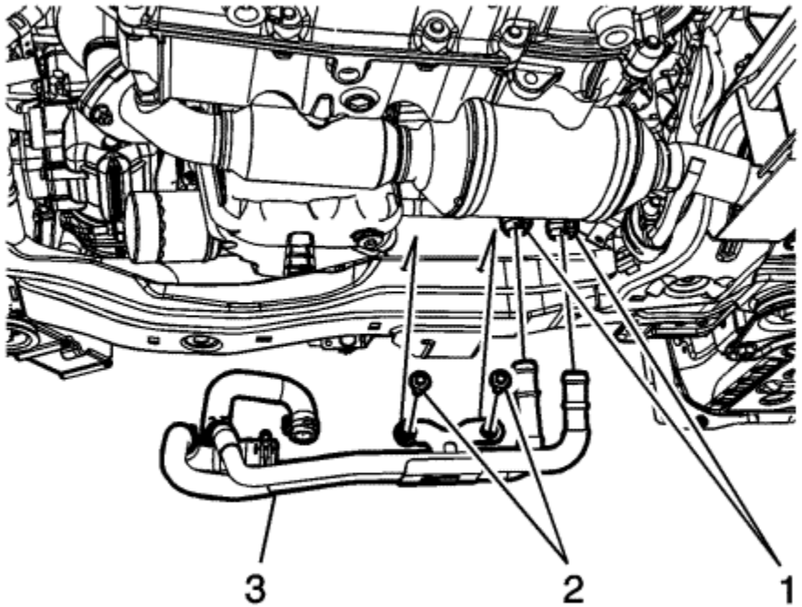

7. Remove the heater inlet and outlet pipe clamps (1) at the heater water auxiliary pump inlet hose and the heater outlet hose using *BO-38185* pliers .
8. Remove the heater inlet and outlet pipe bolts (2) from the cradle.
9. Remove the heater inlet and outlet pipe (3) from the vehicle.

Installation Procedure

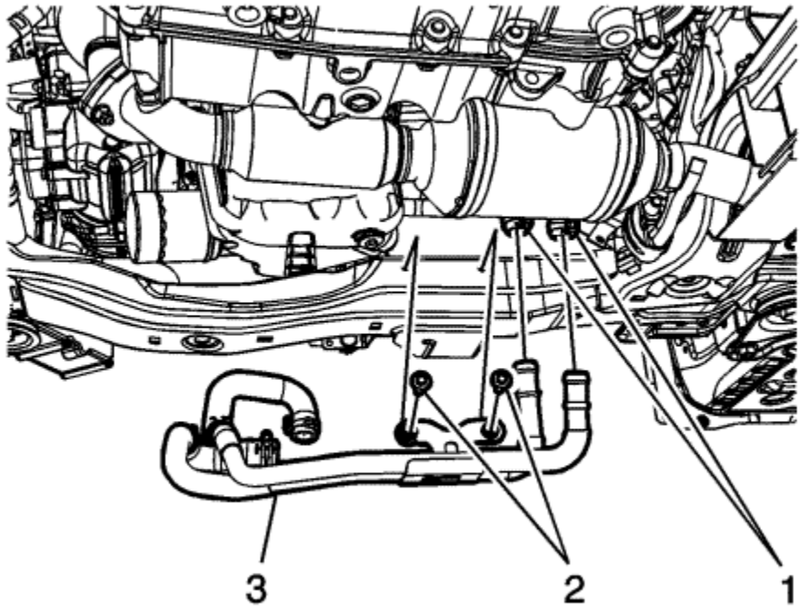

1. Install the heater inlet and outlet pipe (3) to the vehicle.

   Caution: Refer to Fastener Caution in the Preface section.

2. Install the heater inlet and outlet pipe bolts (2) to the cradle and torque to **17 N·m (13 lb ft)**.
3. Install the heater inlet and outlet pipe clamps (1) at the heater water auxiliary pump inlet hose and the heater outlet hose using *BO-38185* pliers .

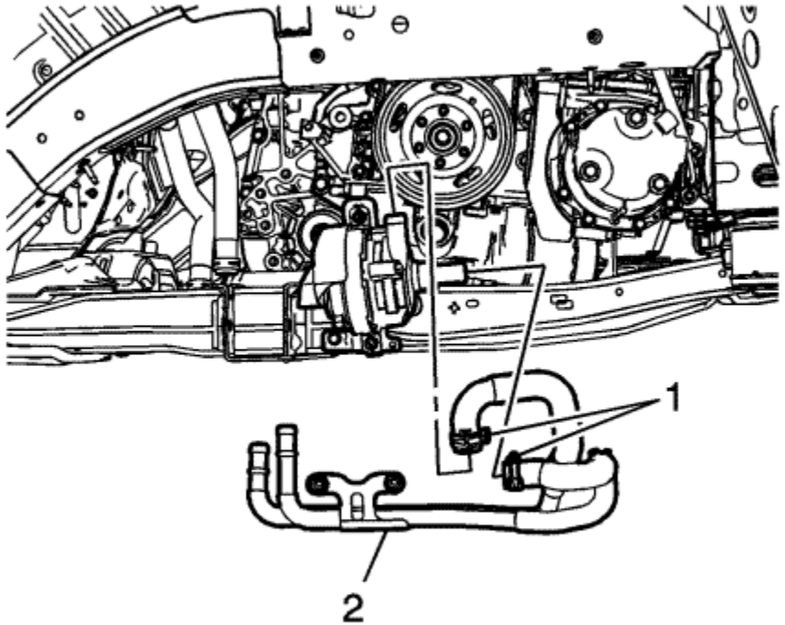

4. Install the heater inlet and outlet pipe (2) to the heater water auxiliary pump.
5. Install the heater inlet and outlet pipe clamps (1) at the heater water auxiliary pump using *BO-38185* pliers .
6. Install the front wheelhouse front liner on passenger side. Refer to Front Wheelhouse Front Liner Replacement .
7. Fill the cooling system. Refer to Cooling System Draining and Filling .
8. Connect the battery negative cable. Refer to Battery Negative Cable Disconnection and Connection .
9. Enable the high voltage system. Refer to High Voltage Enabling .

&#169© Copyright Chevrolet. All rights reserved

Heater Outlet Hose Replacement

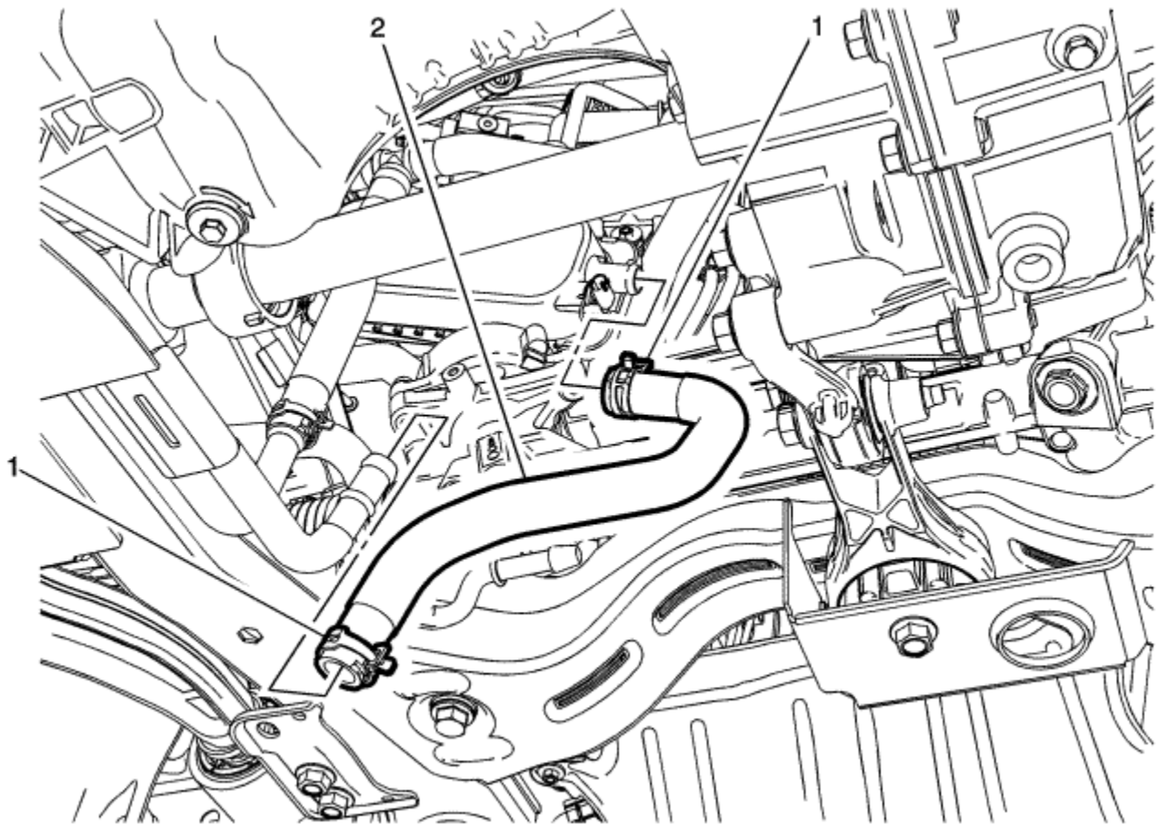

Callout	Component Name
Danger: Always perform the High Voltage Disabling procedure prior to servicing any High Voltage component or connection. Personal Protection Equipment (PPE) and proper procedures must be followed. The High Voltage Disabling procedure will perform the following tasks: Identify how to disable high voltage.	

-
- Identify how to test for the presence of high voltage.
- Identify conditions under which high voltage is always present and personal protection equipment (PPE) and proper procedures must be followed.

Failure to follow the procedures exactly as written may result in serious injury or death.

Preliminary Procedure

1. Disable the high voltage system. Refer to High Voltage Disabling and High Voltage Enabling .
2. Drain the coolant. Refer to Cooling System Draining and Filling .
3. Raise and support the vehicle. Refer to Lifting and Jacking the Vehicle .

1	Heater Outlet Hose Clamps (Qty: 2) **Procedure** Reposition the heater outlet hose clamps using *BO-38185* pliers **Special Tools** *BO-38185* Hose Clamp Pliers For equivalent regional tools, refer to Special Tools .
2	Heater Outlet Hose **Note:** Replace corroded hose clamps and brackets.

&#169© Copyright Chevrolet. All rights reserved

Heater Core Outlet Tube Replacement

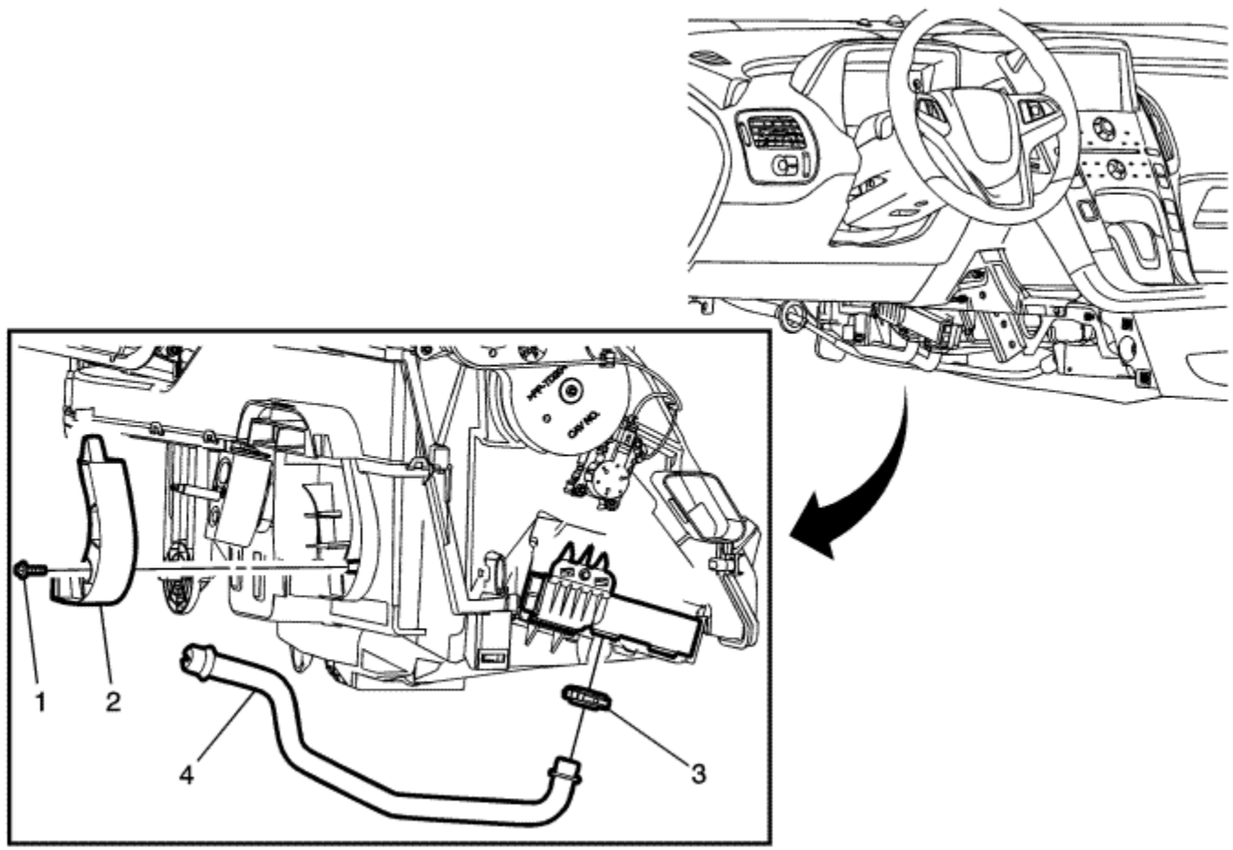

Callout	Component Name

Danger: Always perform the High Voltage Disabling procedure prior to servicing any High Voltage component or connection. Personal Protection Equipment (PPE) and proper procedures must be followed.

The High Voltage Disabling procedure will perform the following tasks:

Identify how to disable high voltage.

-
- Identify how to test for the presence of high voltage.
- Identify conditions under which high voltage is always present and personal protection equipment (PPE) and proper procedures must be followed.

Failure to follow the procedures exactly as written may result in serious injury or death.

Preliminary Procedures

1. Disable the high voltage system. Refer to High Voltage Disabling and High Voltage Enabling .
2. Remove the air conditioning and heater module assembly. Refer to Air Conditioning and Heater Module Assembly Removal and Installation .

1	Bracket Heater Core Outlet Tube Bolt **Caution:** Refer to Fastener Caution in the Preface section. **Tighten** 2.5 N·m (23 lb in)
2	Heater Core Outlet Tube Brace
3	Heater Core Outlet Tube Clamp
4	Heater Core Outlet Tube

&#169© Copyright Chevrolet. All rights reserved

Heater Core Inlet Tube Replacement

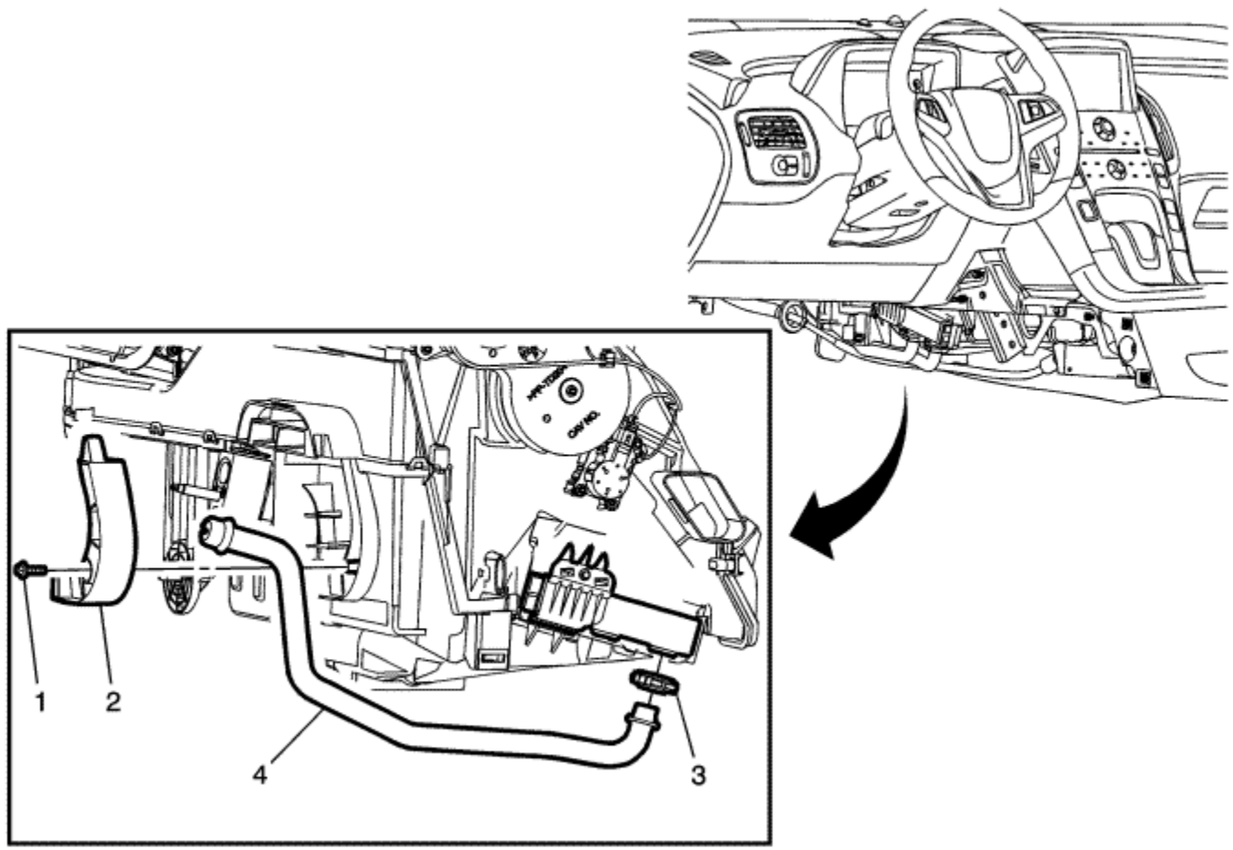

Callout	Component Name

Danger: Always perform the High Voltage Disabling procedure prior to servicing any High Voltage component or connection. Personal Protection Equipment (PPE) and proper procedures must be followed.

The High Voltage Disabling procedure will perform the following tasks:

Identify how to disable high voltage.

-
- Identify how to test for the presence of high voltage.
- Identify conditions under which high voltage is always present and personal protection equipment (PPE) and proper procedures must be followed.

Failure to follow the procedures exactly as written may result in serious injury or death.

Preliminary Procedures

1. Disable the high voltage system. Refer to High Voltage Disabling and High Voltage Enabling .
2. Remove the air conditioning and heater module assembly. Refer to Air Conditioning and Heater Module Assembly Removal and Installation .

1	Bracket Heater Core Inlet Tube Bolt **Caution:** Refer to Fastener Caution in the Preface section. **Tighten** 2.5 N·m (23 lb in)
2	Heater Core Outlet Tube Brace
3	Heater Core Outlet Tube Clamp
4	Heater Core Outlet Tube

&#169© Copyright Chevrolet. All rights reserved

Heater Inlet Pipe Adapter Replacement

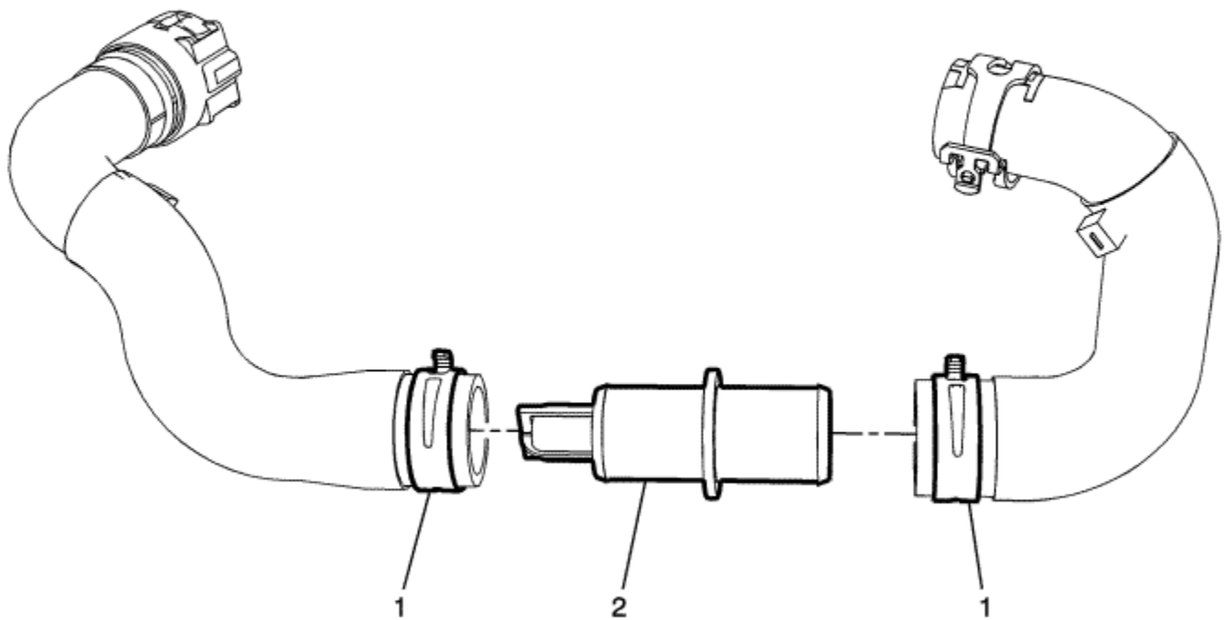

Callout	Component Name
Danger: Always perform the High Voltage Disabling procedure prior to servicing any High Voltage component or connection. Personal Protection Equipment (PPE) and proper procedures must be followed. The High Voltage Disabling procedure will perform the following tasks: Identify how to disable high voltage.	

-
- Identify how to test for the presence of high voltage.
- Identify conditions under which high voltage is always present and personal protection equipment (PPE) and proper procedures must be followed.

Failure to follow the procedures exactly as written may result in serious injury or death.

Preliminary Procedures

1. Disable high voltage system. Refer to High Voltage Disabling and High Voltage Enabling .
2. Remove the heater water shutoff valve actuator inlet hose. Refer to Heater Water Shutoff Valve Actuator Inlet Hose Replacement .

1	Heater Inlet Pipe Adapter Hose Clamps **Procedure** Reposition the heater inlet pipe adapter hose clamps using *BO-38185* pliers. **Special Tools** *BO-38185* Hose Clamp Pliers For equivalent regional tools, refer to Special Tools .
2	Heater Inlet Pipe Adapter **Note:** Replace corroded hose clamps and brackets.

&#169© Copyright Chevrolet. All rights reserved

Air Inlet Valve Actuator Gear Replacement

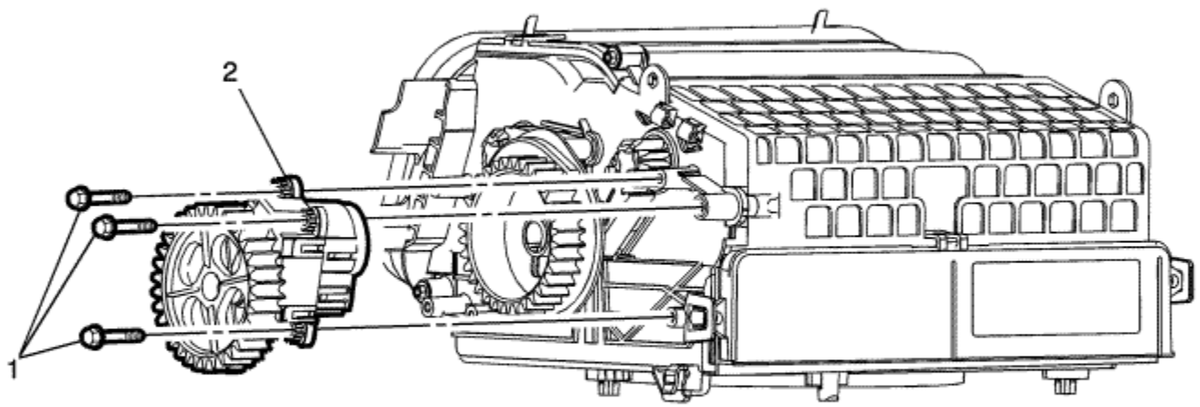

Callout	Component Name
Preliminary Procedures Remove the air inlet assembly. Air Inlet Assembly Replacement	
	Air Inlet Valve Actuator Gear Screw (Qty: 3)

1	**Caution:** Refer to Fastener Caution in the Preface section. **Tighten** 1.5 N·m (13 lb in)
2	Air Inlet Valve Actuator Gear **Procedure** Disconnect the air inlet valve actuator gear electrical connector. **Tip** Actuator is self-calibrating when connecting the battery.

© Copyright Chevrolet. All rights reserved

Passenger Compartment Air Filter Replacement

Removal Procedure

1. Open the instrument panel lower compartment and remove rubber mat.Refer to.Instrument Panel Lower Compartment Replacement

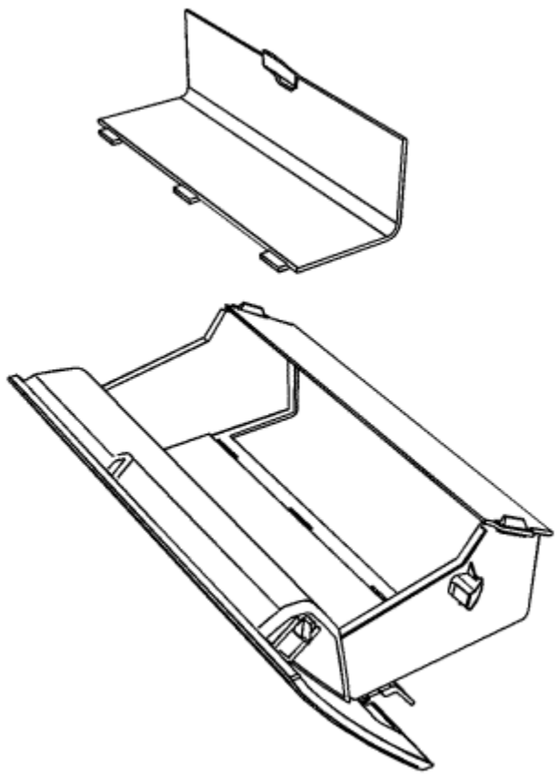

2. Remove the instrument panel lower compartment filter access door.

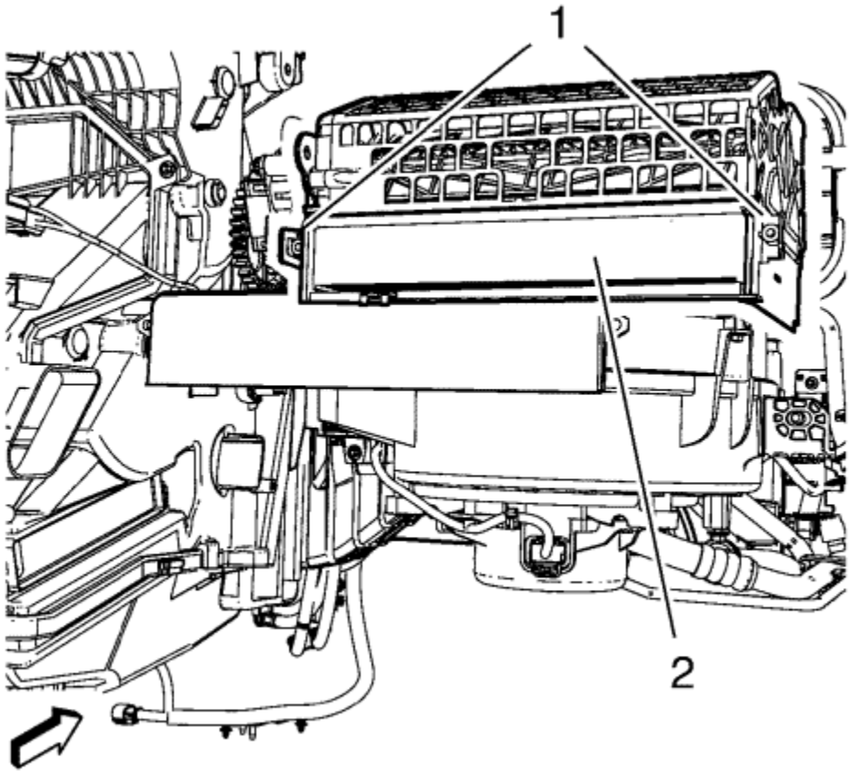

3. Unclip 2 clips (1) and remove passenger compartment air filter (2).

Installation Procedure

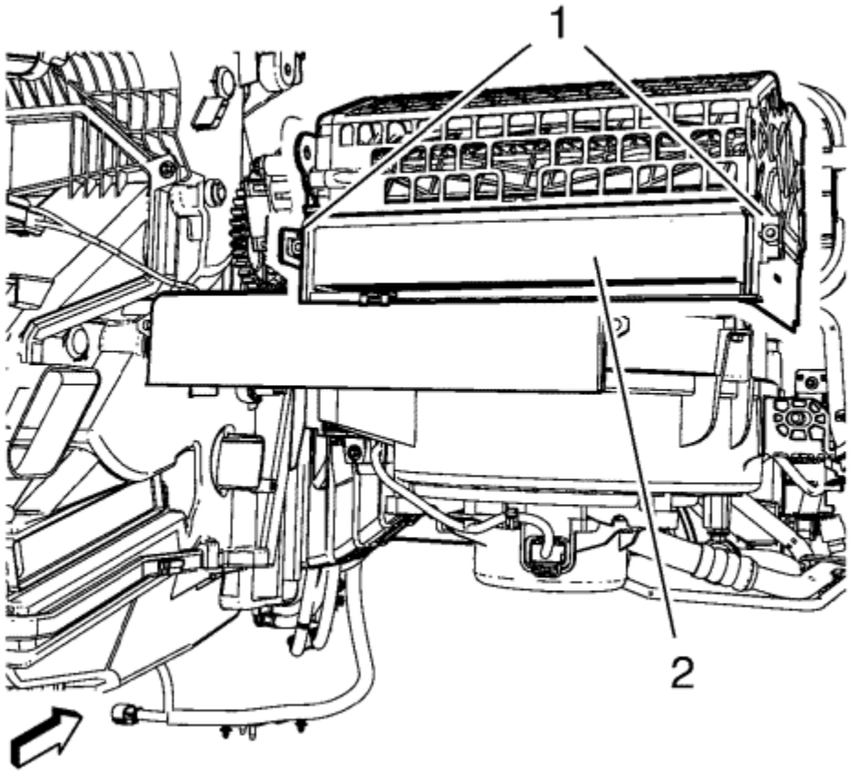

1. Install passenger compartment air filter (2) and clip in 2 clips (1).

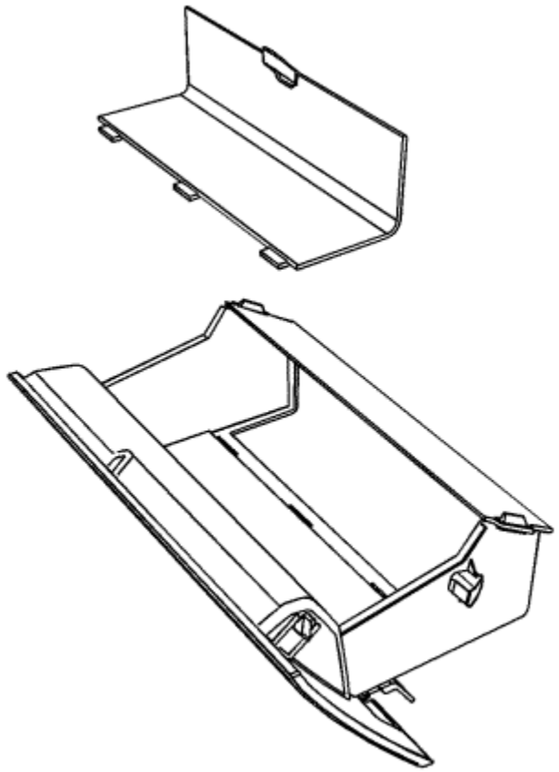

2. Install the instrument panel lower compartment filter access door.
3. Install instrument panel compartment. Refer to Instrument Panel Lower Compartment Replacement .

© Copyright Chevrolet. All rights reserved

Air Inlet Replacement

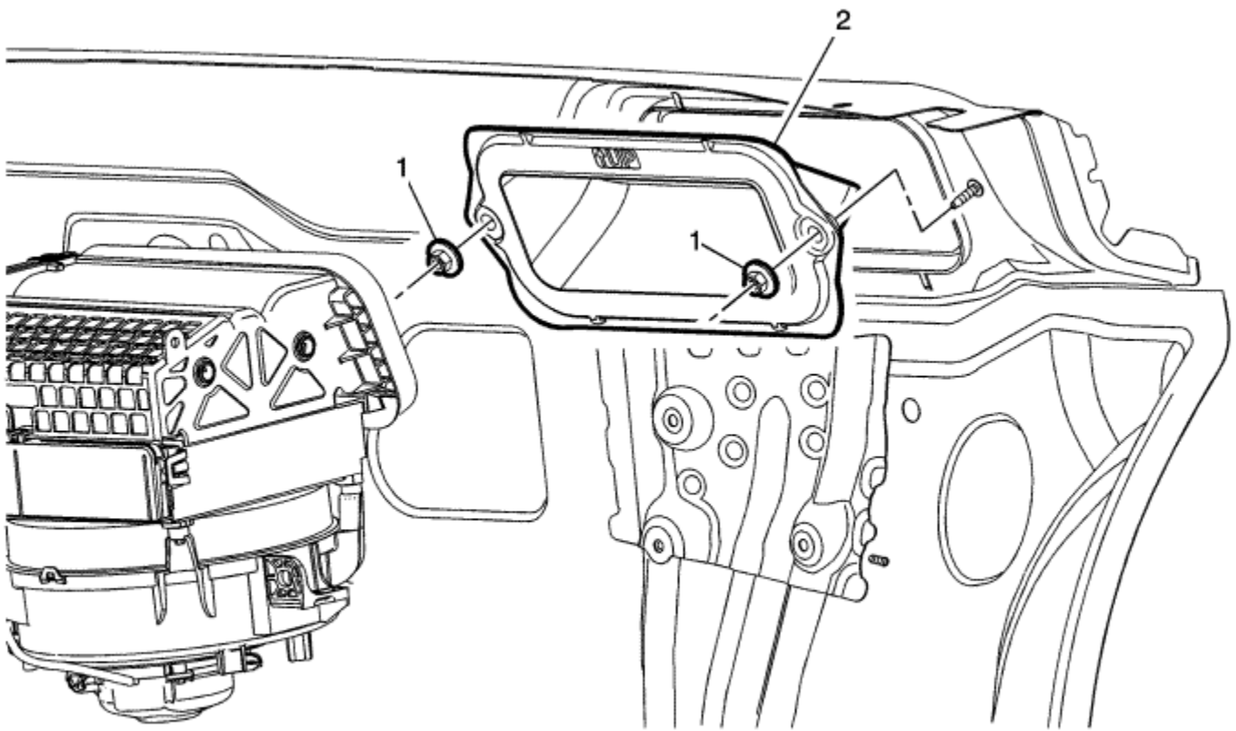

Callout	Component Name
Preliminary Procedures Remove the heater and air conditioning evaporator and blower module. Refer to Air Conditioning and Heater Module Assembly Removal and Installation .	
	Air Inlet Fastener (Qty: 2)

1	**Caution:** Refer to Fastener Caution in the Preface section. **Tighten** 2.5 N·m (23 lb in)
2	Air Inlet

© Copyright Chevrolet. All rights reserved

Air Inlet Assembly Replacement

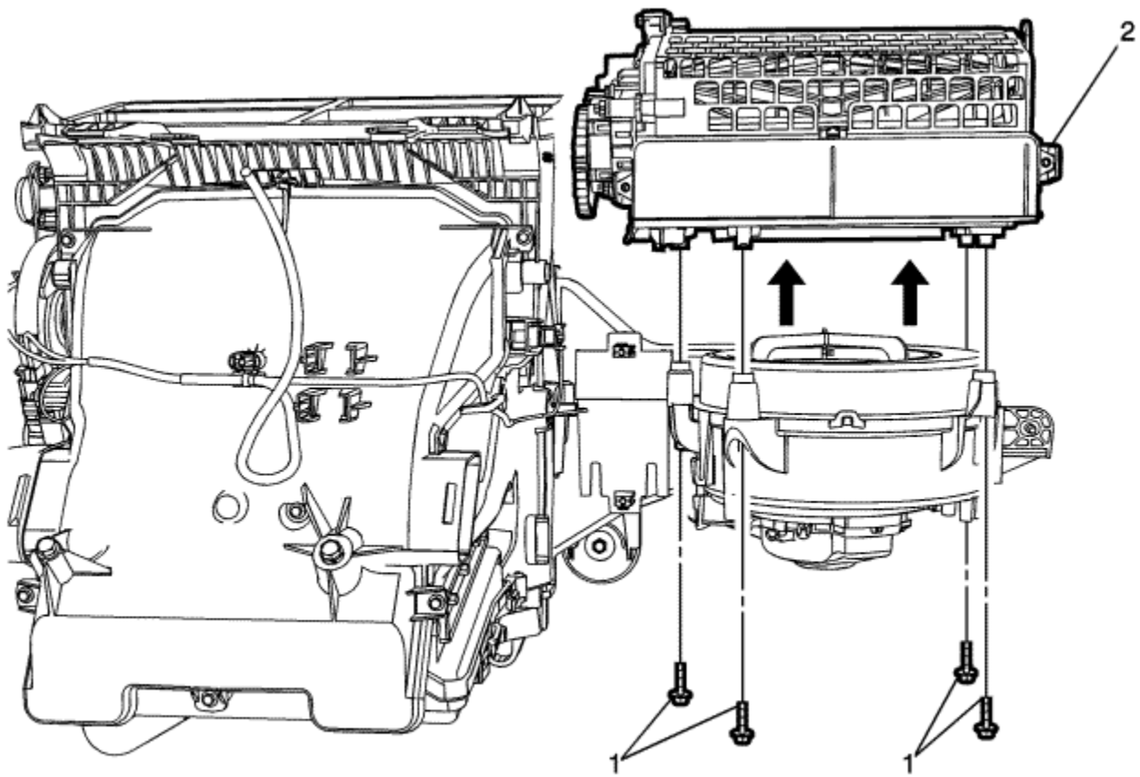

Callout	Component Name
Preliminary Procedures	

1. Remove the heater and air conditioning evaporator and blower module. Refer to Air Conditioning and Heater Module Assembly Removal and Installation .
2. Remove the air inlet valve actuator gear. Refer to Air Inlet Valve Actuator Gear Replacement .
3. Remove the air inlet valve and inside air valve control cam. Refer to Air Inlet Valve and Inside Air Valve Control Cam Replacement .

1	Air Inlet Housing Fastener (Qty: 4) **Caution:** Refer to Fastener Caution in the Preface section. **Tighten** 2.5 N·m (23 lb in)
2	Air Inlet Housing

© Copyright Chevrolet. All rights reserved

Blower Motor Control Module Replacement

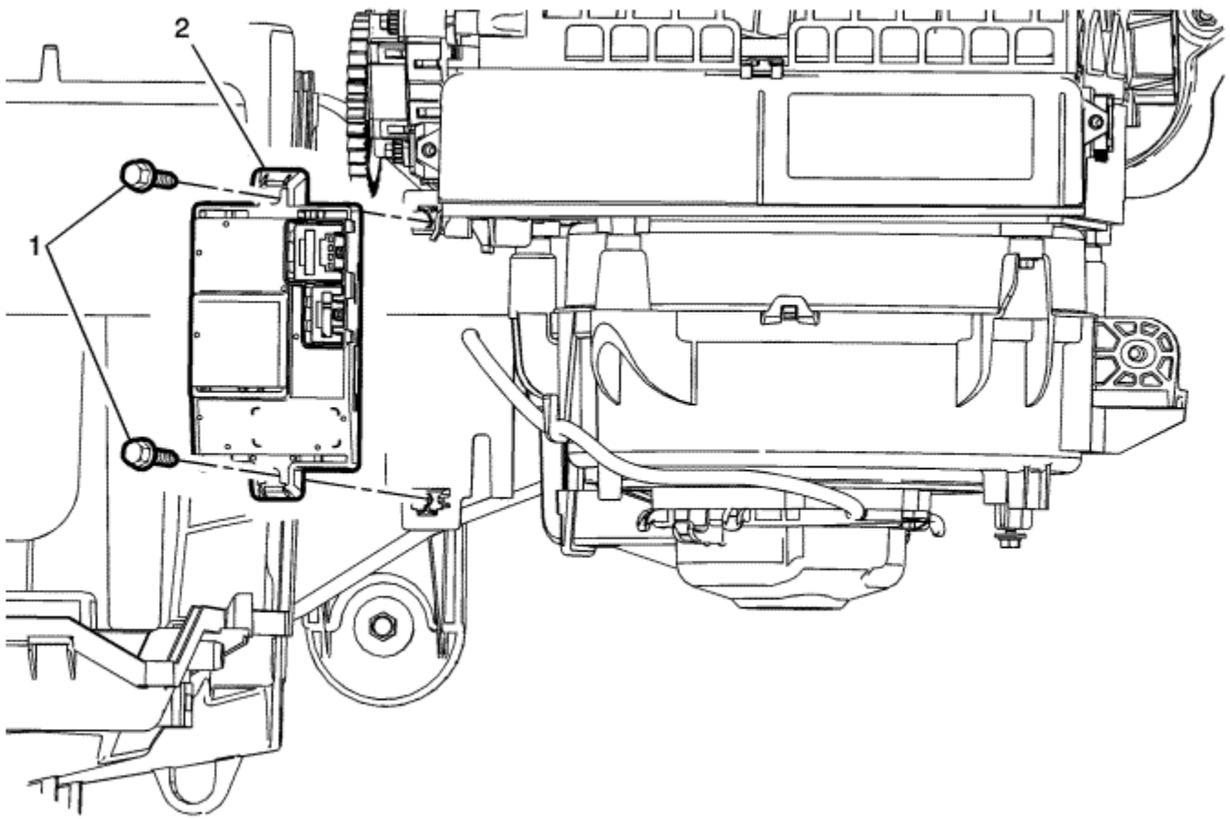

Callout	Component Name
Preliminary Procedures	

1. Remove the I/P Lower Trim Panel Insulator Refer to Instrument Panel Lower Trim Panel Insulator Replacement .
2. Remove the right side floor front air outlet duct. Refer to.Floor Front Air Outlet Duct Replacement - Right Side
3. Reposition any wiring or hoses to gain access to blower motor control.

1	Blower Motor Control Module Screw (Qty: 2) **Caution:** Refer to Fastener Caution in the Preface section. **Tighten** 2 N·m (17 lb in)
2	Blower Motor Control Module **Procedure** Disconnect the wiring connector.

© Copyright Chevrolet. All rights reserved

Air Inlet Valve and Inside Air Valve Control Cam Replacement

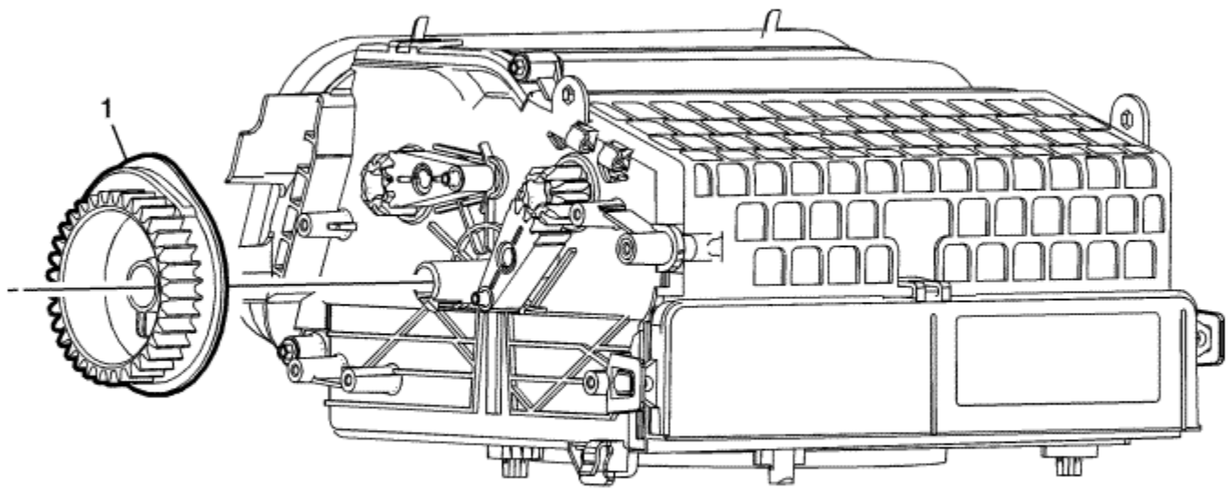

Callout	Component Name
Preliminary Procedure Remove the air inlet valve actuator gear. Refer to Air Inlet Valve Actuator Gear Replacement	
	Air Inlet Valve and Inside Air Valve Control Cam

1	**Procedure** Release the centre tab and pull off the control cam. **Tip** The air inlet valve and inside air valve control cam can only be fitted in one position.

© Copyright Chevrolet. All rights reserved

Air Inlet Valve Lever Replacement

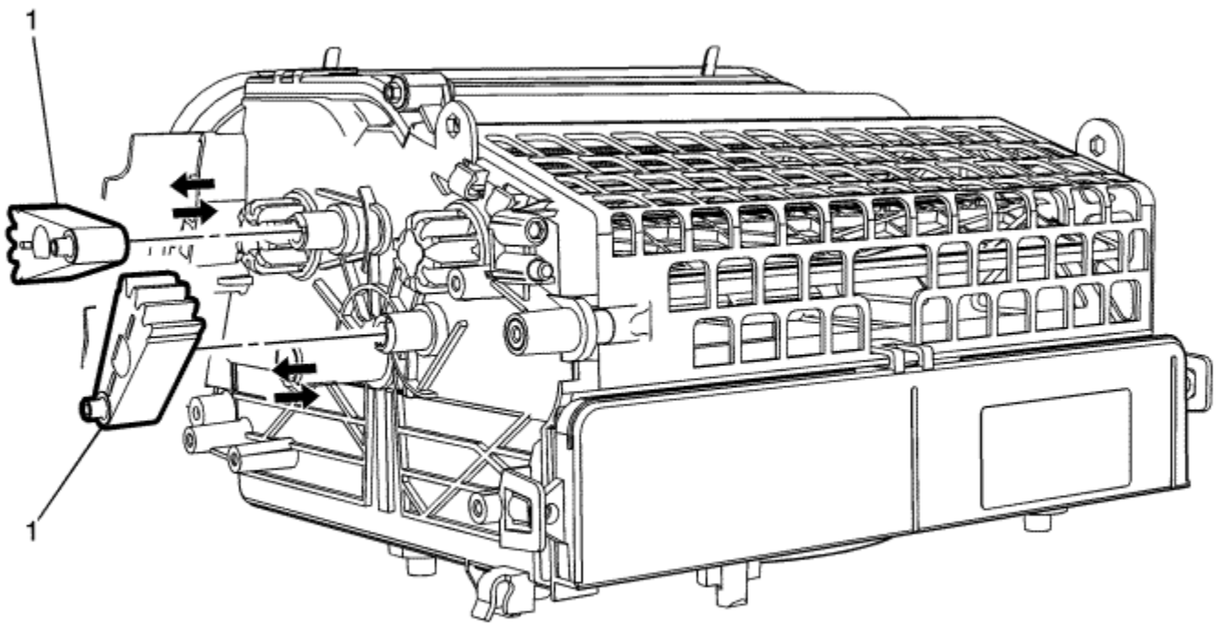

Callout	Component Name
Preliminary Procedure Remove the inlet valve and inside air valve control cam gear. Refer to Air Inlet Valve and Inside Air Valve Control Cam Replacement .	
	Mode Valve Lever

1	**Procedure** 1. Move the inlet valve to the middle position and mark the position of the inlet valve lever notch to the mode valve gear. 2. Remove the inlet valve lever. **Tip** Use the indentation for the correct positioning of the lever arms.

© Copyright Chevrolet. All rights reserved

Blower Motor Replacement

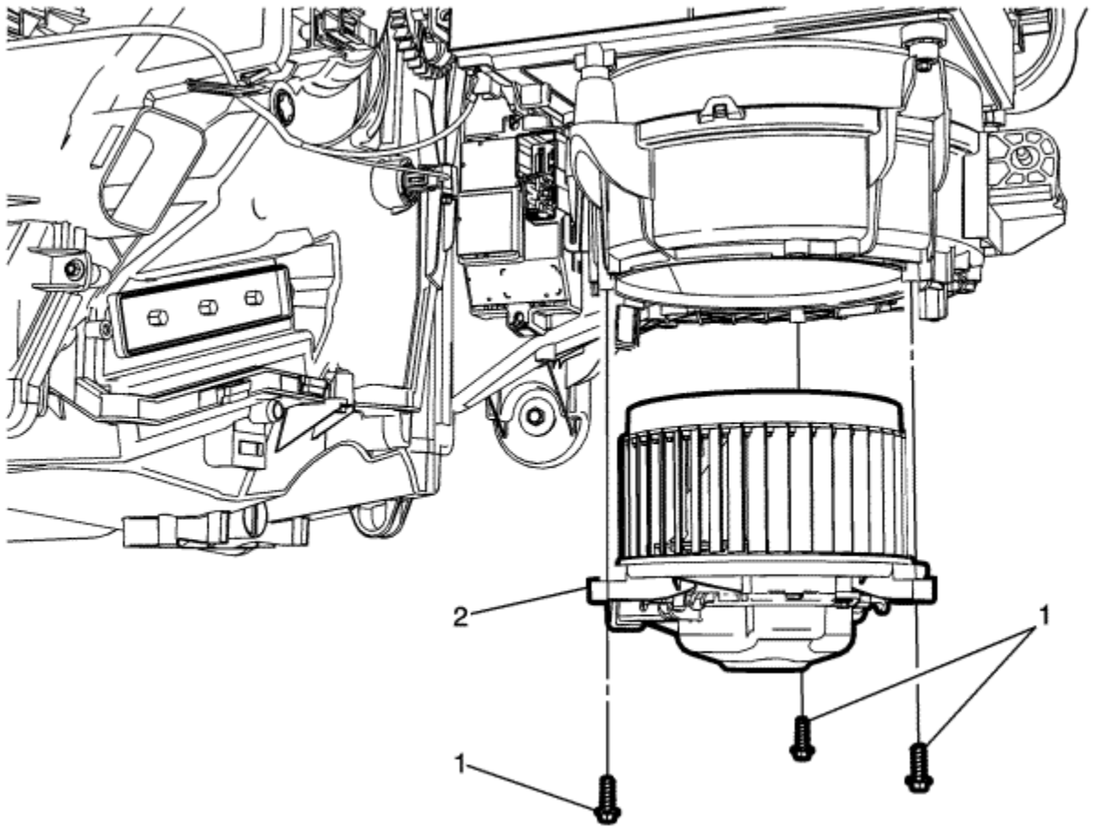

Callout	Component Name

Preliminary Procedure

1. Remove the instrument panel lower trim panel insulator - right side. Refer to Instrument Panel Lower Trim Panel Insulator Replacement .
2. Remove the floor air outlet duct. Refer to Floor Front Air Outlet Duct Replacement - Right Side .
3. Disconnect the blower motor electrical connector.

1	Blower Motor Fastener (Qty: 3) **Caution:** Refer to Fastener Caution in the Preface section.
2	Blower Motor

© Copyright Chevrolet. All rights reserved

Air Distributor Case Replacement

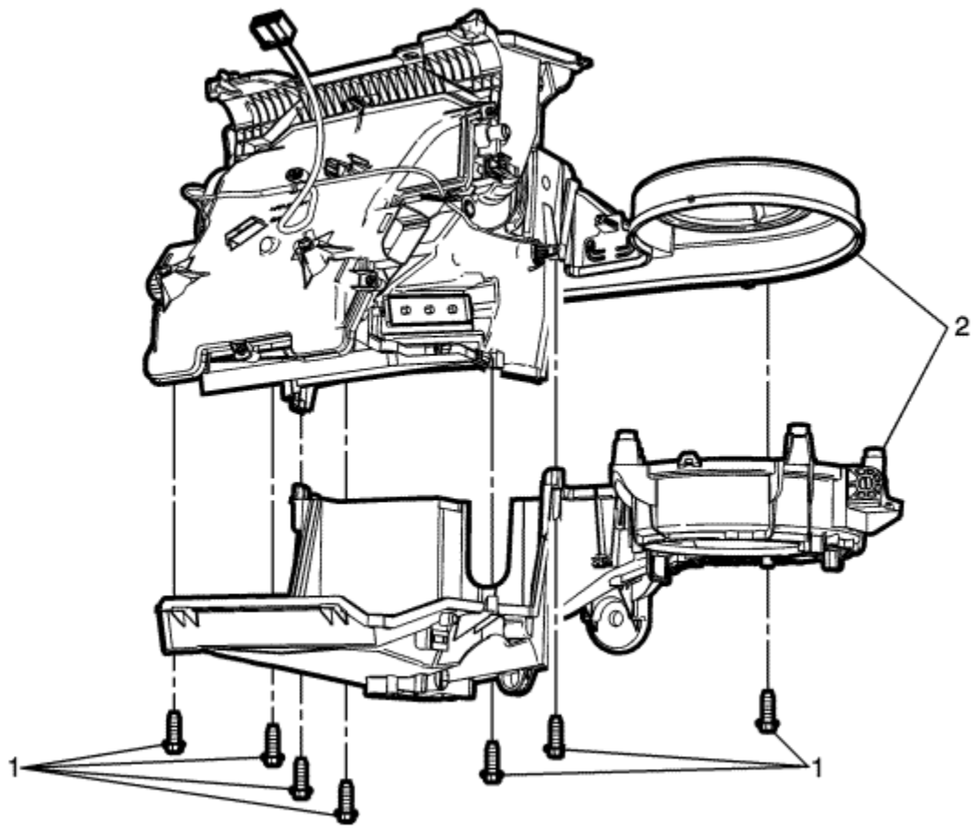

Callout	Component Name
Preliminary Procedure 1. Remove the HVAC module. Refer to Air Conditioning and Heater Module Assembly Removal and Installation . 2. Reposition any wiring harnesses before removal.	

1	Air Distribution Case Screw Qty: (7) **Caution:** Refer to Fastener Caution in the Preface section. **Tighten** 3 N·m (27 lb in)
2	Air Distribution Case **Procedure** 1. Prior to removing the air distribution case, note the routing of the wiring to ensure proper reinstallation. 2. Disconnect all electrical connections. 3. When replacing the air distribution case, transfer all necessary components.

© Copyright Chevrolet. All rights reserved

Instrument Panel Outer Air Outlet Replacement - Left Side

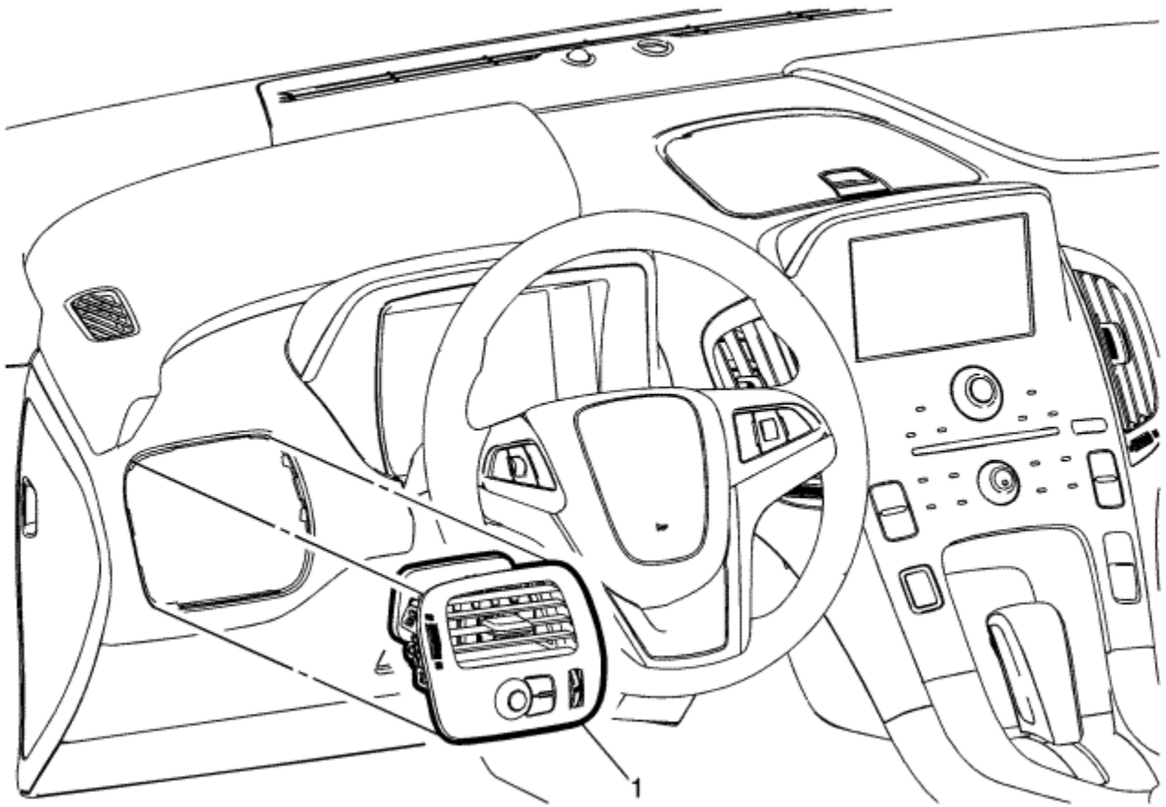

Callout	Component Name
1	Instrument Panel Outer Air Outlet Assembly **Procedures** 1. Use a flat bladed plastic trim tool to aid in the removal of the air outlet from the instrument panel assembly.

	2. Disconnect the electrical connections. 3. When replacing the air outlet assembly, transfer all necessary parts.

© Copyright Chevrolet. All rights reserved

Instrument Panel Centre Air Outlet Replacement

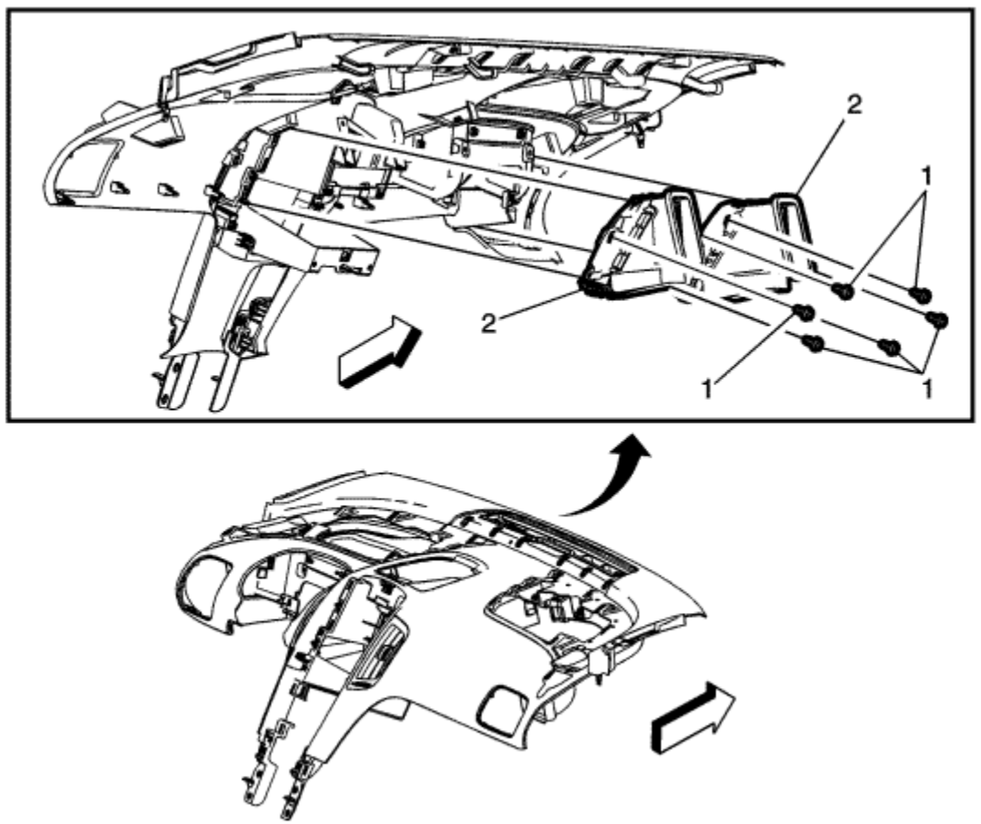

Callout	Component Name
Preliminary Procedures 1. Remove the instrument panel upper trim pad retainer assembly. Refer to Upper Trim Pad Retainer Replacement . 2. Remove the instrument panel centre air outlet duct. Refer to Instrument Panel Centre Air Outlet Duct Replacement .	

1	Instrument Panel Centre Air Outlet Fasteners (Qty: 6) (3 per outlet) **Caution:** Refer to Fastener Caution in the Preface section.
2	Instrument Panel Centre Air Outlet Assemblies (Right or Left)

© Copyright Chevrolet. All rights reserved

Instrument Panel Outer Air Outlet Replacement - Right Side

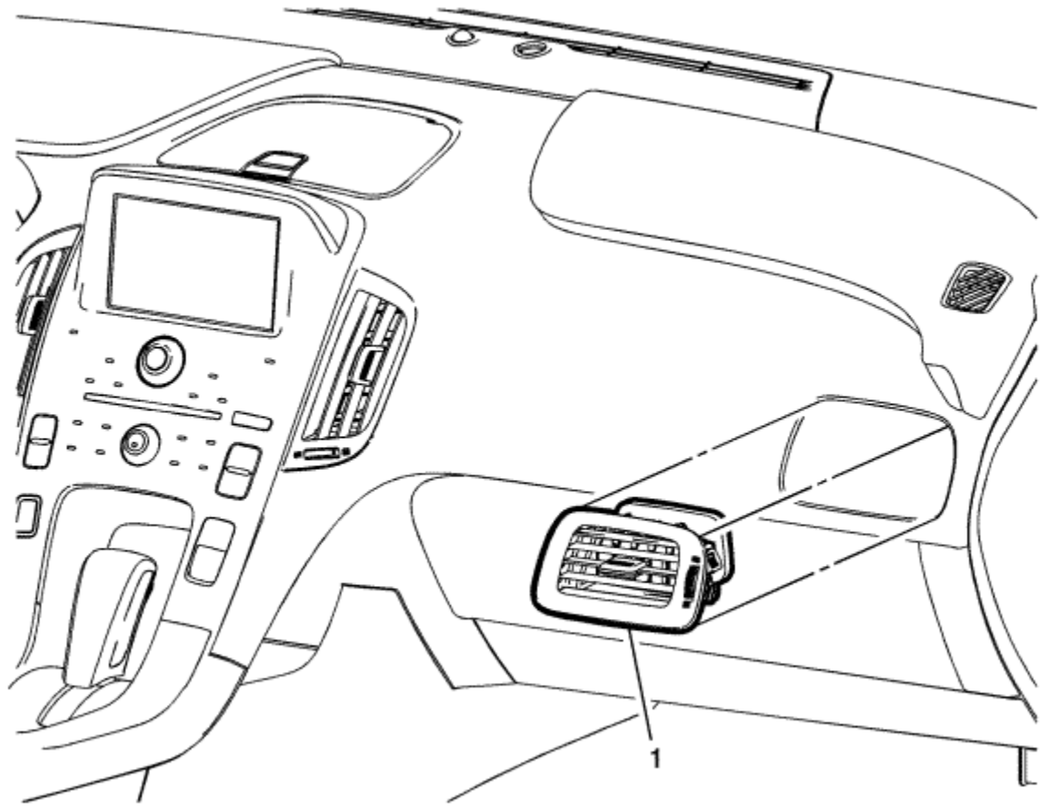

Callout	Component Name
1	Instrument Panel Outer Air Outlet Assembly **Procedure** Use a flat bladed plastic trim tool to aid in the removal of the air outlet from the instrument panel assembly.

© Copyright Chevrolet. All rights reserved

Floor Front Air Outlet Duct Replacement - Right Side

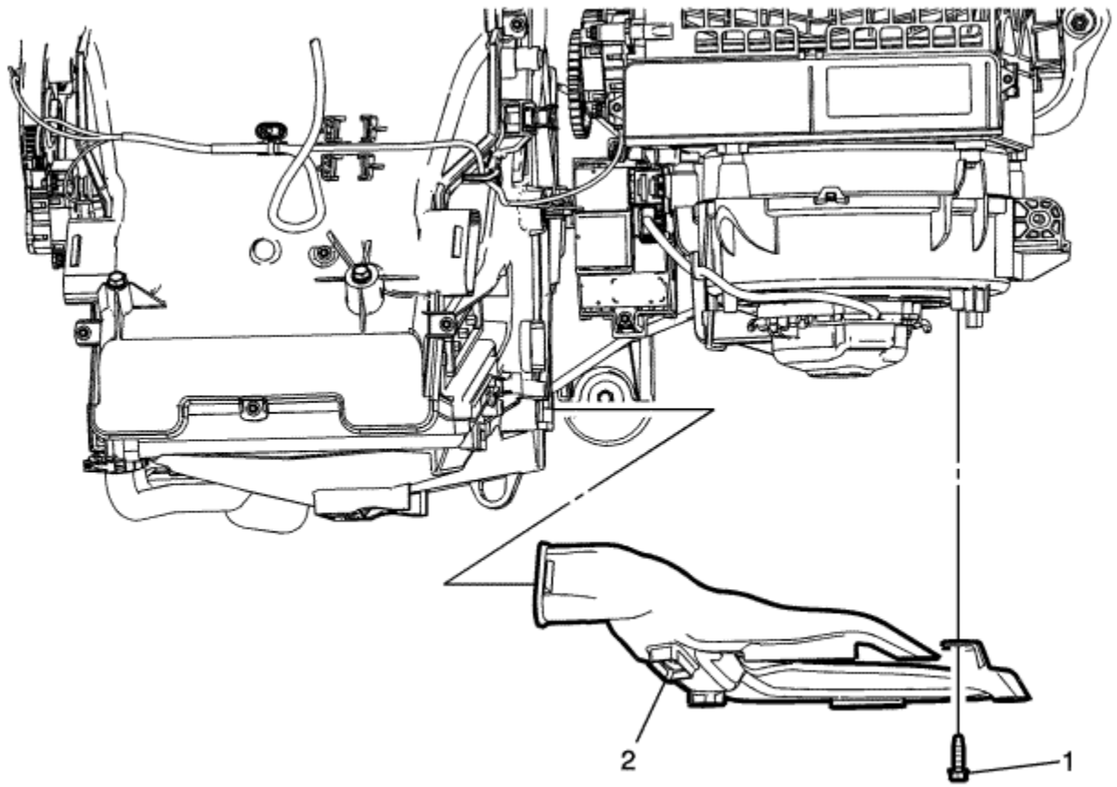

Callout	Component Name
Preliminary Procedure Remove the instrument panel lower compartment. Refer to Instrument Panel Lower Compartment Replacement .	
1	Floor Front Air Outlet Duct Fastener
2	Floor Front Air Outlet Duct - Right Hand Side

© Copyright Chevrolet. All rights reserved

Floor Front Air Outlet Duct Replacement - Left Side

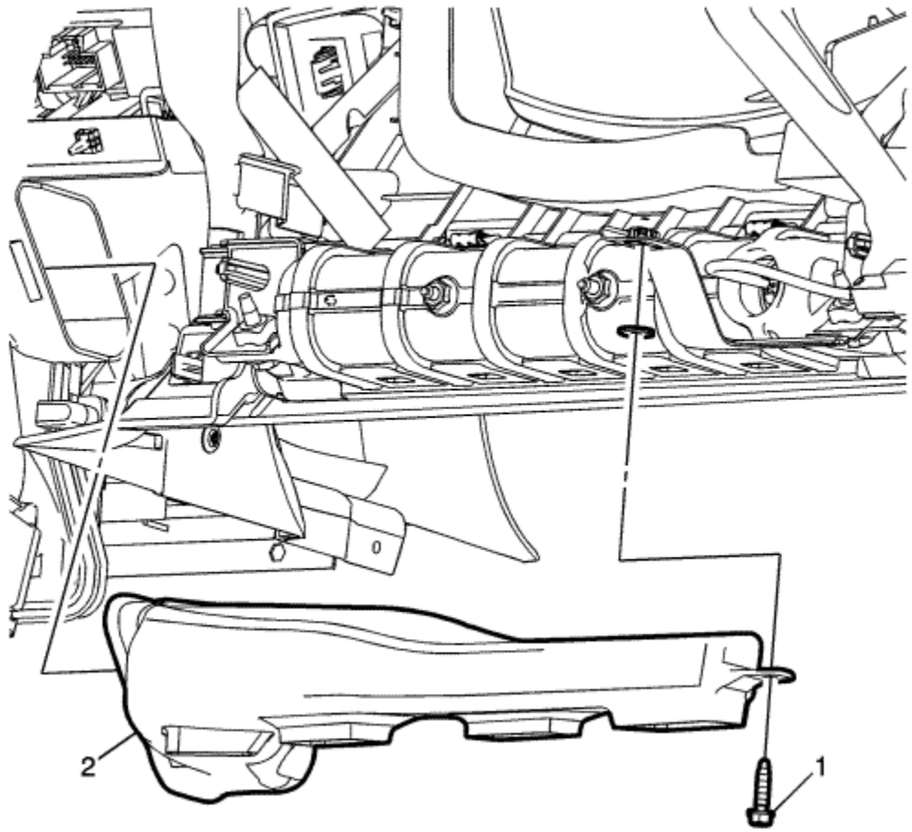

Callout	Component Name
1	Floor Front Air Outlet Duct Fastener
2	Floor Front Air Outlet Duct - Left Side

© Copyright Chevrolet. All rights reserved

Instrument Panel Centre Air Outlet Duct Replacement

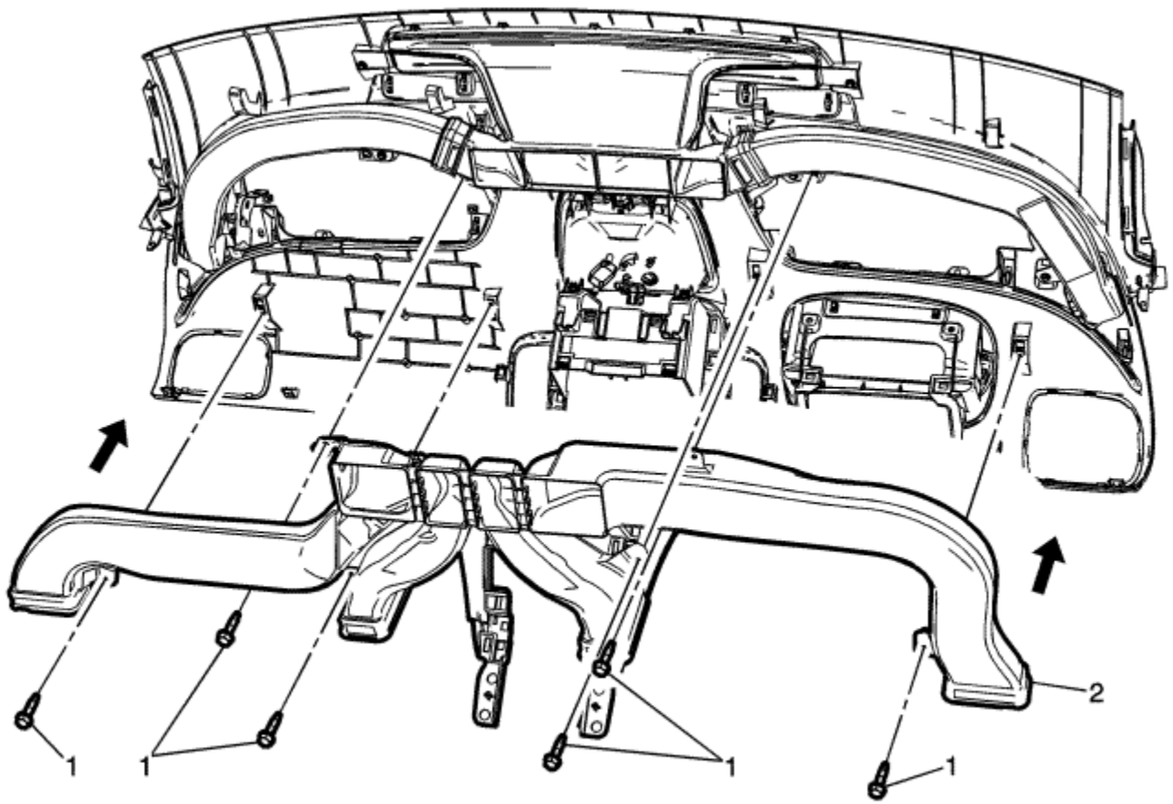

Callout	Component Name
Preliminary Procedure Remove the Upper Trim Pad Retainer Replacement. Refer to Upper Trim Pad Retainer Replacement	
	Instrument Panel Centre Air Outlet Duct Fasteners (Qty: 6)

1	**Caution:** Refer to Fastener Caution in the Preface section. **Tighten** 1.5 N·m (13 lb in)
2	Instrument Panel Centre Air Outlet Duct

© Copyright Chevrolet. All rights reserved

Windscreen Defroster Nozzle Replacement

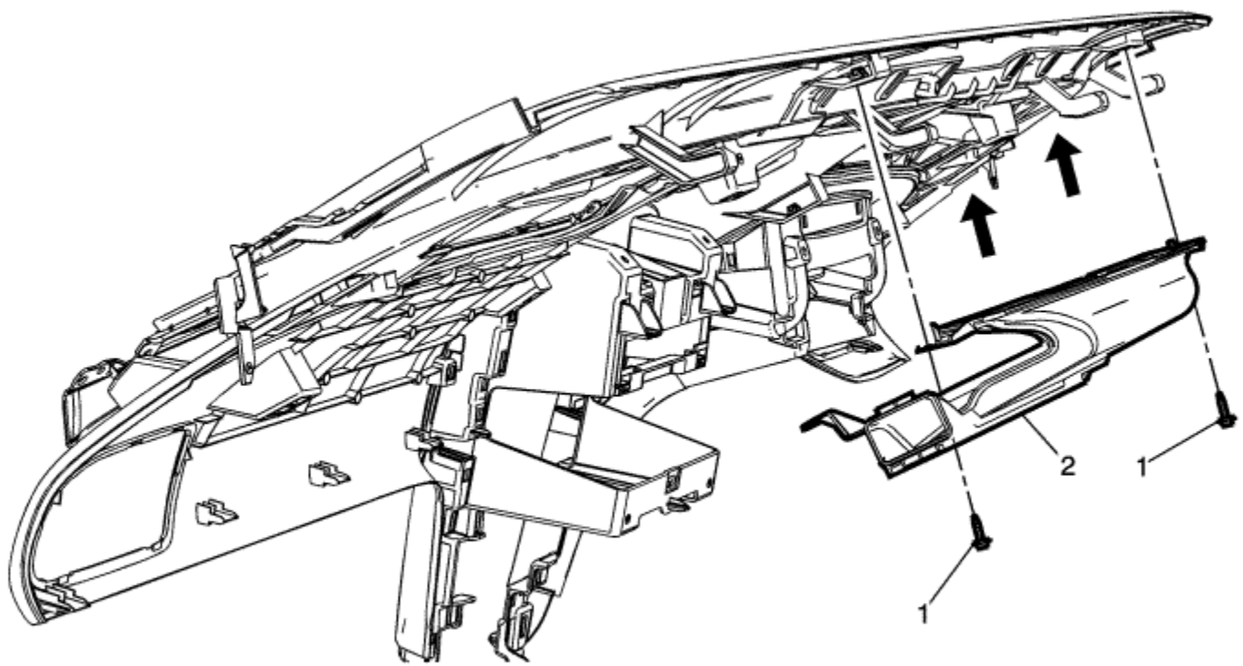

Callout	Component Name
Preliminary Procedure Remove the instrument panel centre air outlet duct. Refer to Instrument Panel Centre Air Outlet Duct Replacement .	
1	Windscreen Defroster Nozzle Duct Fasteners (Qty: 2)

	Caution: Refer to Fastener Caution in the Preface section.
2	Windscreen Defroster Nozzle Duct

© Copyright Chevrolet. All rights reserved

Side Window Defogger Outlet Duct Replacement - Left Side

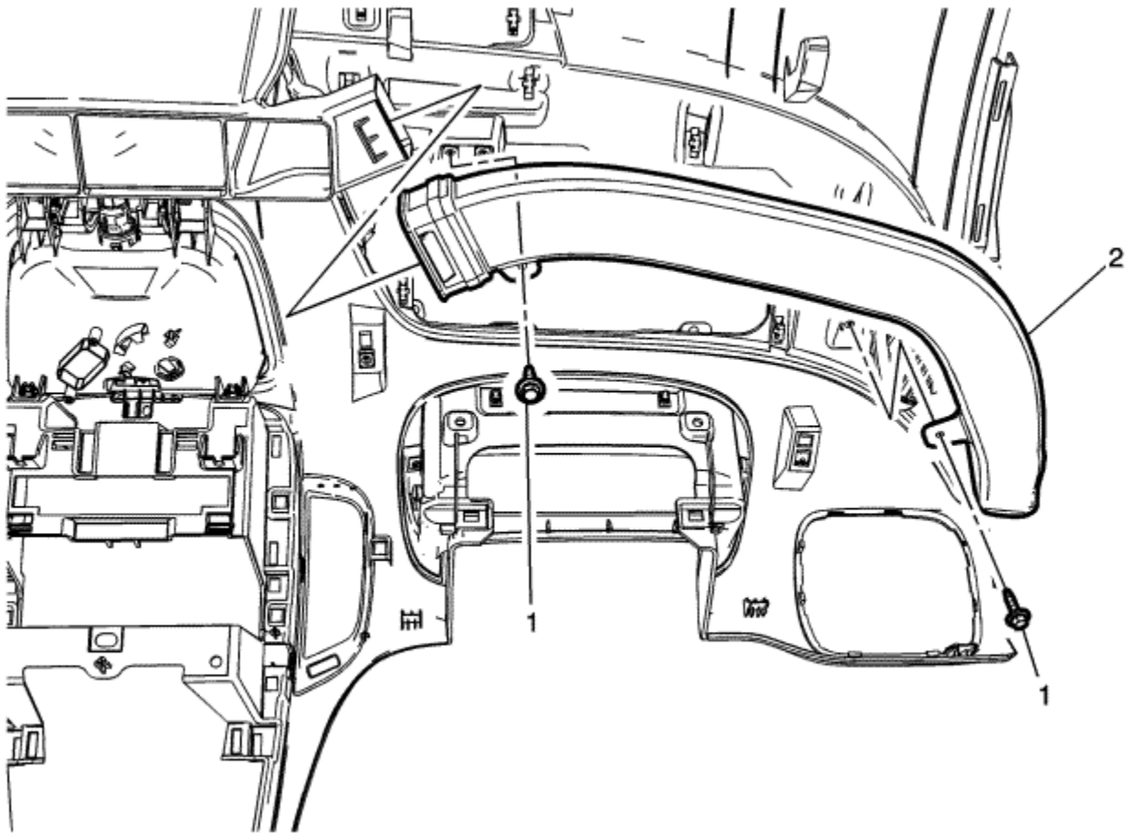

Callout	Component Name
Preliminary Procedure Remove the instrument panel centre air outlet duct. Refer to Instrument Panel Centre Air Outlet Duct Replacement .	
	Side Window Defogger Outlet Duct - Left Fasteners

1	**Caution:** Refer to Fastener Caution in the Preface section. **Tighten** 1.5 N·m (13 lb in)
2	Side Window Defogger Outlet Duct - Left

© Copyright Chevrolet. All rights reserved

Side Window Defogger Outlet Duct Replacement - Right Side

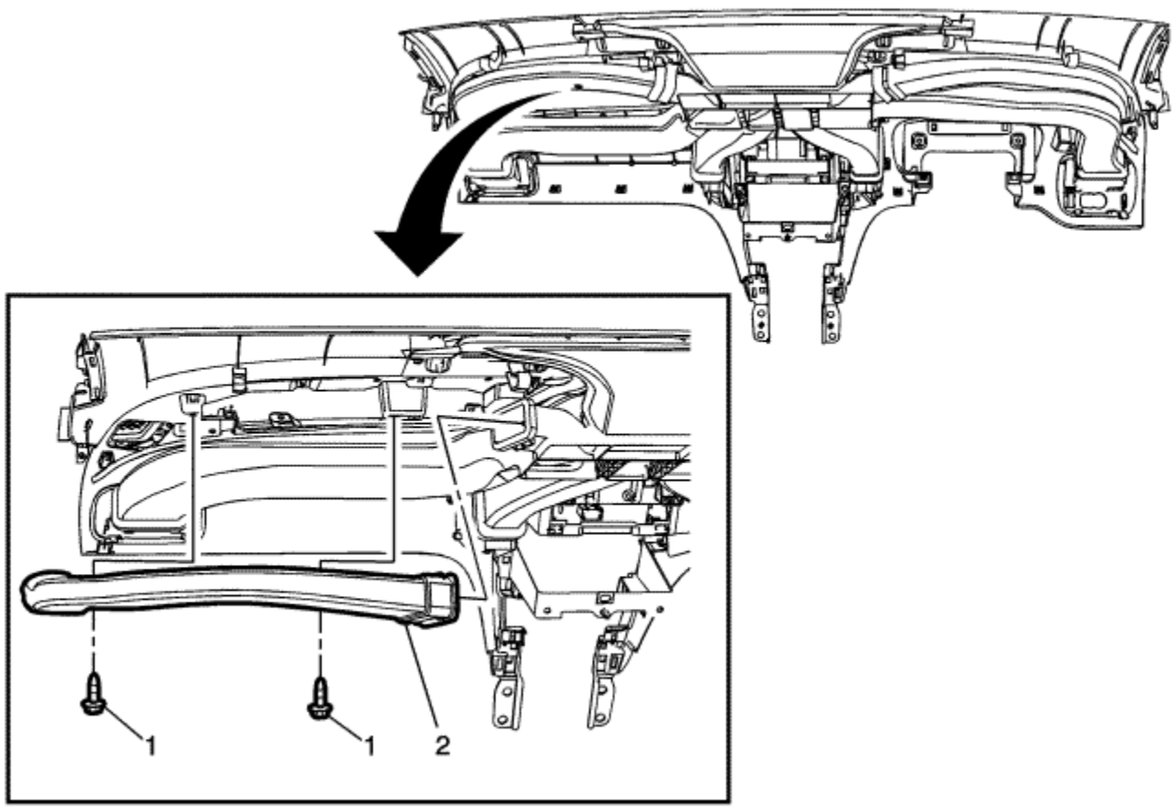

Callout	Component Name
Preliminary Procedure Remove the instrument panel upper trim pad assembly. Refer to Upper Trim Pad Retainer Replacement .	
	Side Window Defogger Outlet Duct Fastener (Qty: 2)

1	**Caution:** Refer to Fastener Caution in the Preface section. **Tighten** 1.5 N·m (13 lb in)
2	Side Window Defogger Outlet Duct - Right Side

© Copyright Chevrolet. All rights reserved

Heater and Air Conditioning Remote Control Replacement

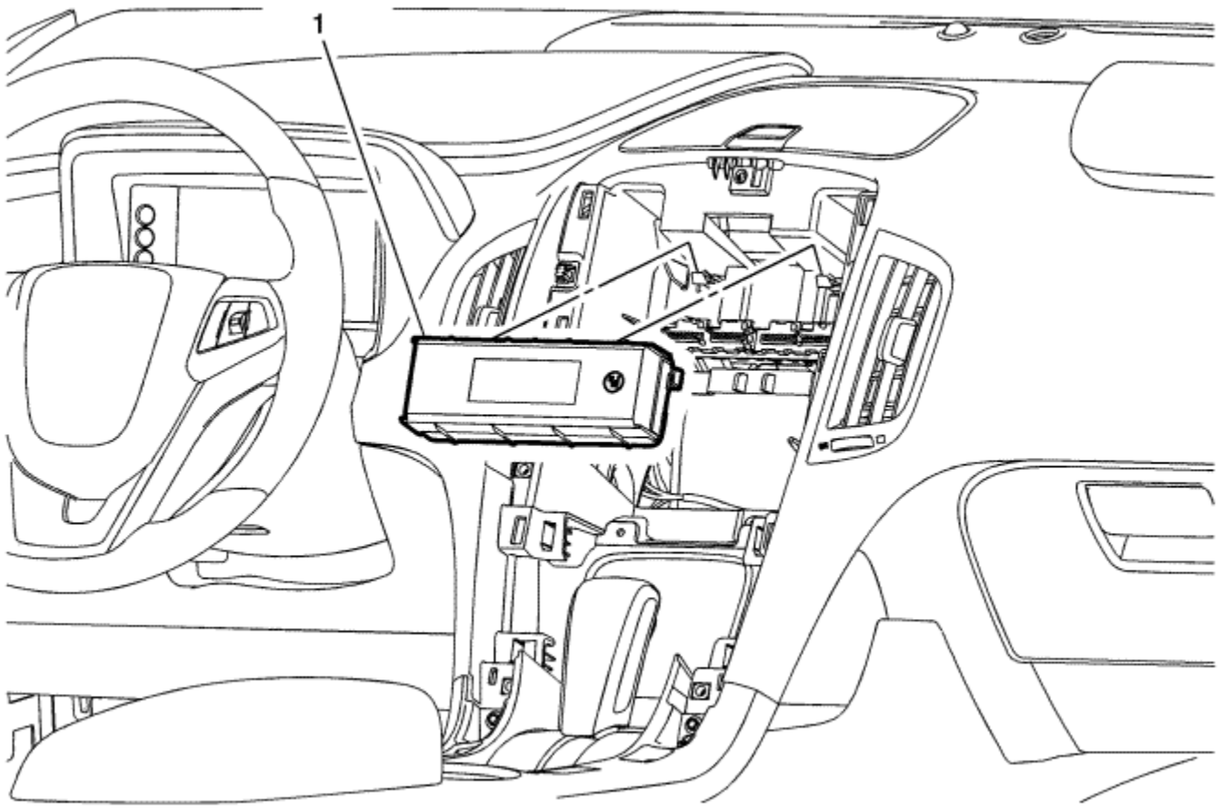

Callout	Component Name
Preliminary Procedures 1. Prepare the heater and air conditioning remote control for replacement. Refer to Control Module References . 2. Remove Radio Control Assembly. Refer to Radio Control Assembly Replacement .	

1	Heater and Air Condition Remote Control **Procedure** 1. Disconnect the heater and air conditioning control harness connector. 2. Programme the heater and air conditioning remote control. Refer to Control Module References .

© Copyright Chevrolet. All rights reserved

Mode Control Cam Actuator Replacement

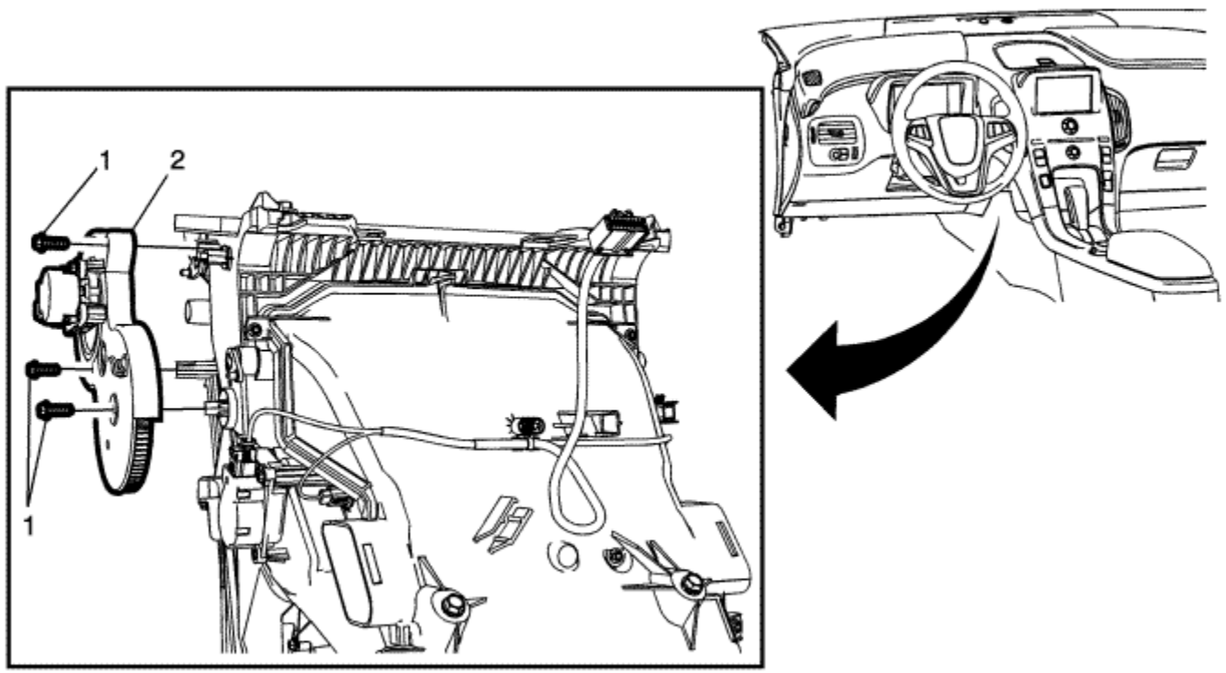

Callout	Component Name
Preliminary Procedures 1. Disconnect the negative battery cable.. 2. Remove the brake pedal assembly. Refer to Brake Pedal Assembly Replacement .	

1	Mode Actuator Screw (Qty: 3) **Caution:** Refer to Fastener Caution in the Preface section. **Procedure** Disconnect the mode actuator electrical connector. **Tighten** 1.5 N·m (13 lb in)
2	Mode Actuator **Tip** Actuator is self-calibrating when connecting the battery.Refer to Actuator Recalibration

© Copyright Chevrolet. All rights reserved

Mode Valve Lever Replacement

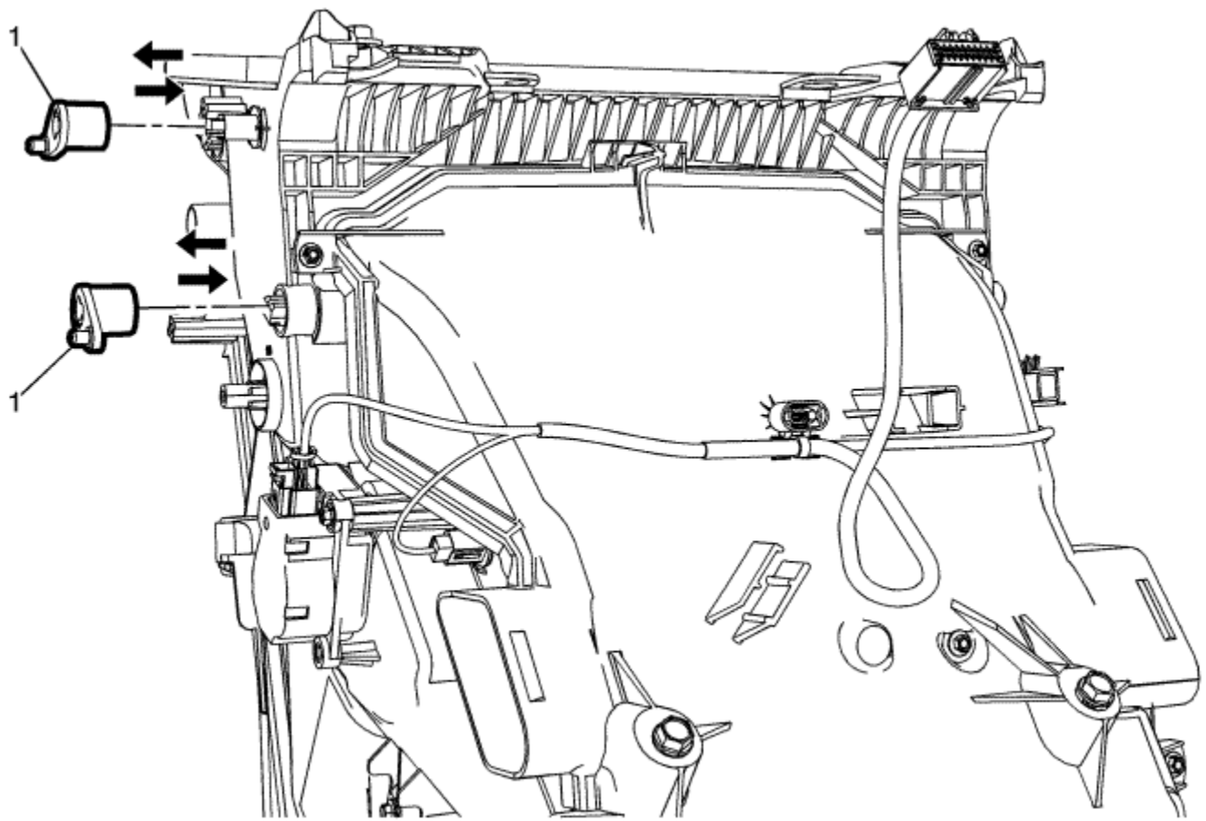

Callout	Component Name
Preliminary Procedure Remove the mode control cam. Refer to Mode Control Cam Actuator Replacement .	
	Mode Valve Lever

1	**Procedure** 1. Move the valve to the middle position and mark the position of the mode valve lever notch to the mode valve gear. 2. Remove the mode valve lever. **Tip** Use the indentation for the correct positioning of the lever arms.

© Copyright Chevrolet. All rights reserved

Heater Coolant Heater Heat Shield Replacement

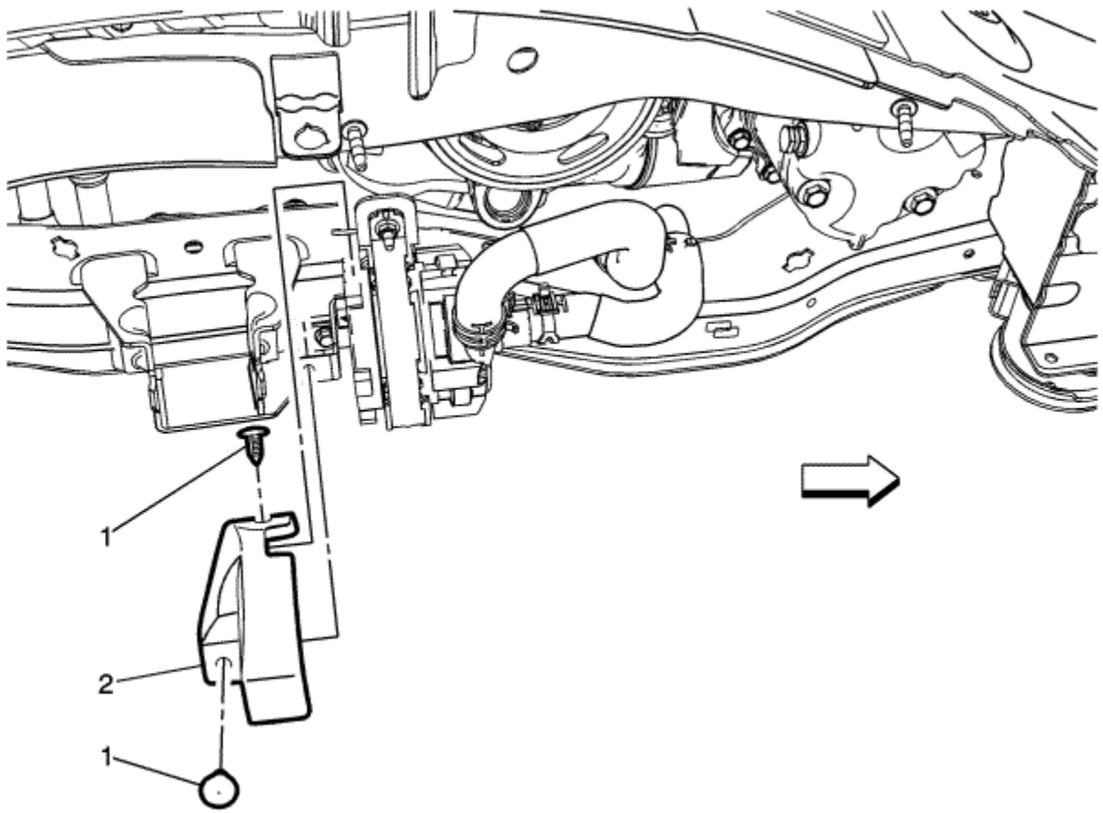

Callout	Component Name
Preliminary Procedure Remove the front wheelhouse front liner on the passenger side. Refer to Front Wheelhouse Front Liner Replacement	
1	Heater Coolant Heater Heat Shield Retainers (Qty: 2).
2	Heater Coolant Heater Heat Shield

© Copyright Chevrolet. All rights reserved

Heater Core Replacement

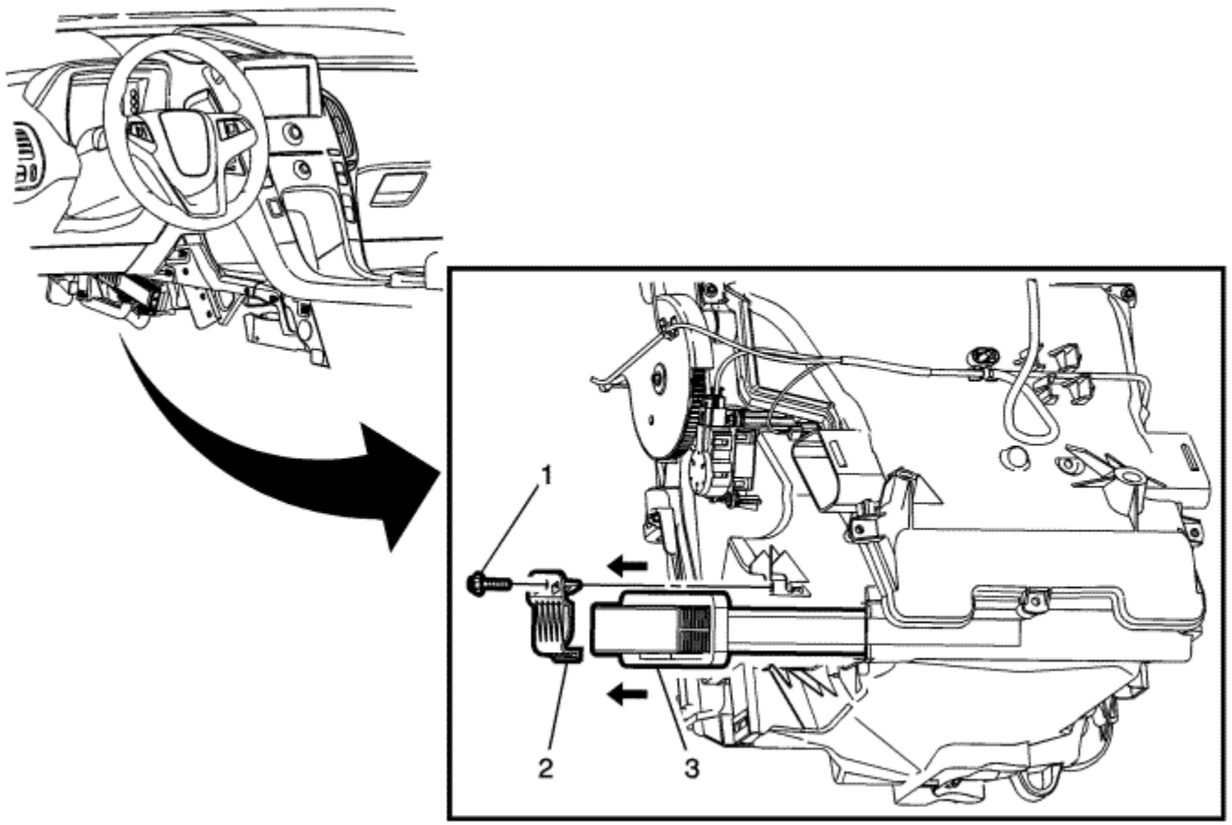

Callout	Component Name
Preliminary Procedure	
1. Remove the Front Floor Console Extension Replacement - left side. Refer to Front Floor Console Extension Replacement - Left Side . 2. Remove the heater inlet hose from the heater core tube. Refer to Heater Inlet Hose Replacement . 3. Remove the Heater Water Shutoff Valve Inlet Hose. Refer to Heater Water Shutoff Valve Inlet Hose Replacement .	

4. Remove the heater inlet tube. Refer to Heater Core Inlet Tube Replacement
5. Remove the heater outlet tube. Refer to Heater Core Outlet Tube Replacement

1	Heater Core Bracket Fastener **Caution:** Refer to Fastener Caution in the Preface section. **Tighten** 1.4 N·m (12.4 lb in)
2	Heater Core Bracket (Qty: 2)
3	Heater Core **Procedure** Pull out the heater core.

© Copyright Chevrolet. All rights reserved

Heater Coolant Heater Air Supply Hose Replacement

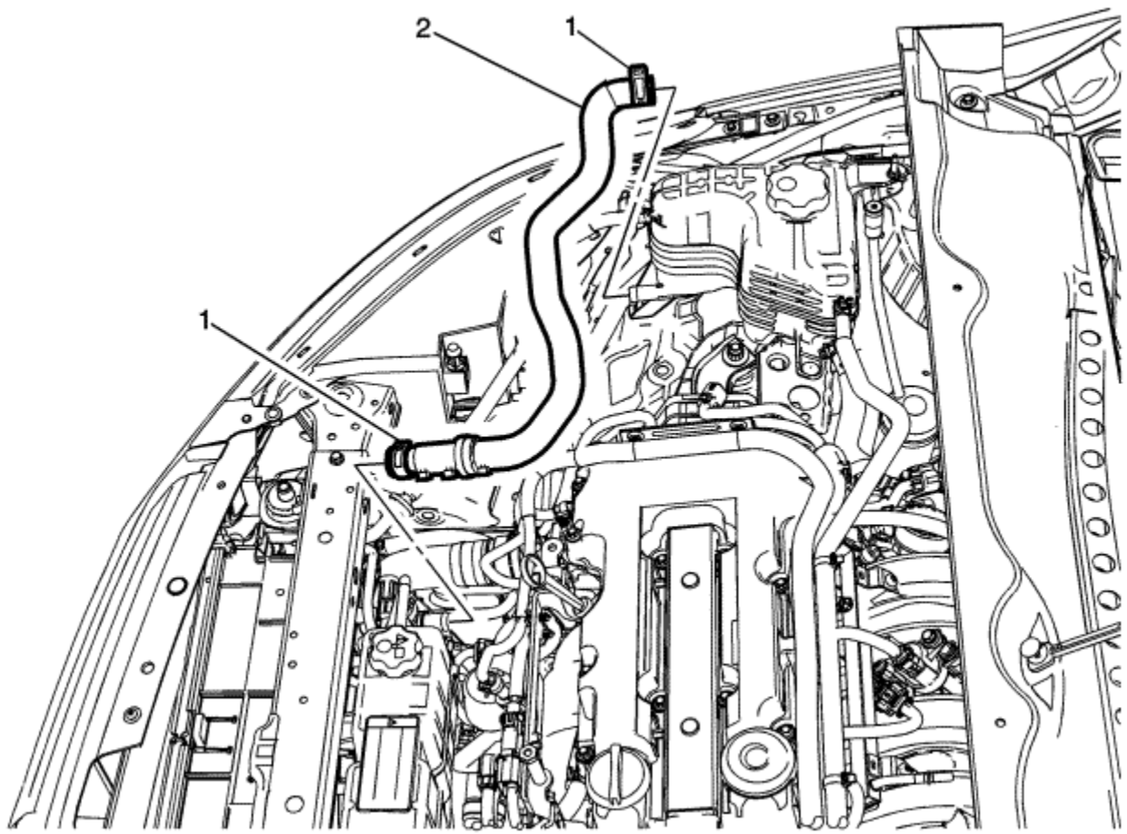

Callout	Component Name

Danger: Always perform the High Voltage Disabling procedure prior to servicing any High Voltage component or connection. Personal Protection Equipment (PPE) and proper procedures must be followed.

The High Voltage Disabling procedure will perform the following tasks:

Identify how to disable high voltage.

-
- Identify how to test for the presence of high voltage.
- Identify conditions under which high voltage is always present and personal protection equipment (PPE) and proper procedures must be followed.

Failure to follow the procedures exactly as written may result in serious injury or death.

Preliminary Procedures

1. Disable the high voltage system. Refer to High Voltage Disabling and High Voltage Enabling .
2. Drain the coolant. Refer to Cooling System Draining and Filling .
3. Remove the air cleaner assembly. Refer to Air Cleaner Assembly Replacement .

1	Heater Coolant Heater Air Supply Hose Clamps (Qty 2) **Procedure** Reposition the heater coolant heater air supply hose clamps using *BO-38185* pliers **Special Tools** *BO-38185* Hose Clamp Pliers For equivalent regional tools, refer to Special Tools
2	Heater Coolant Heater Air Supply Hose **Note:** Replace corroded hose clamps and brackets.

&#169© Copyright Chevrolet. All rights reserved

Heater Coolant Heater Replacement

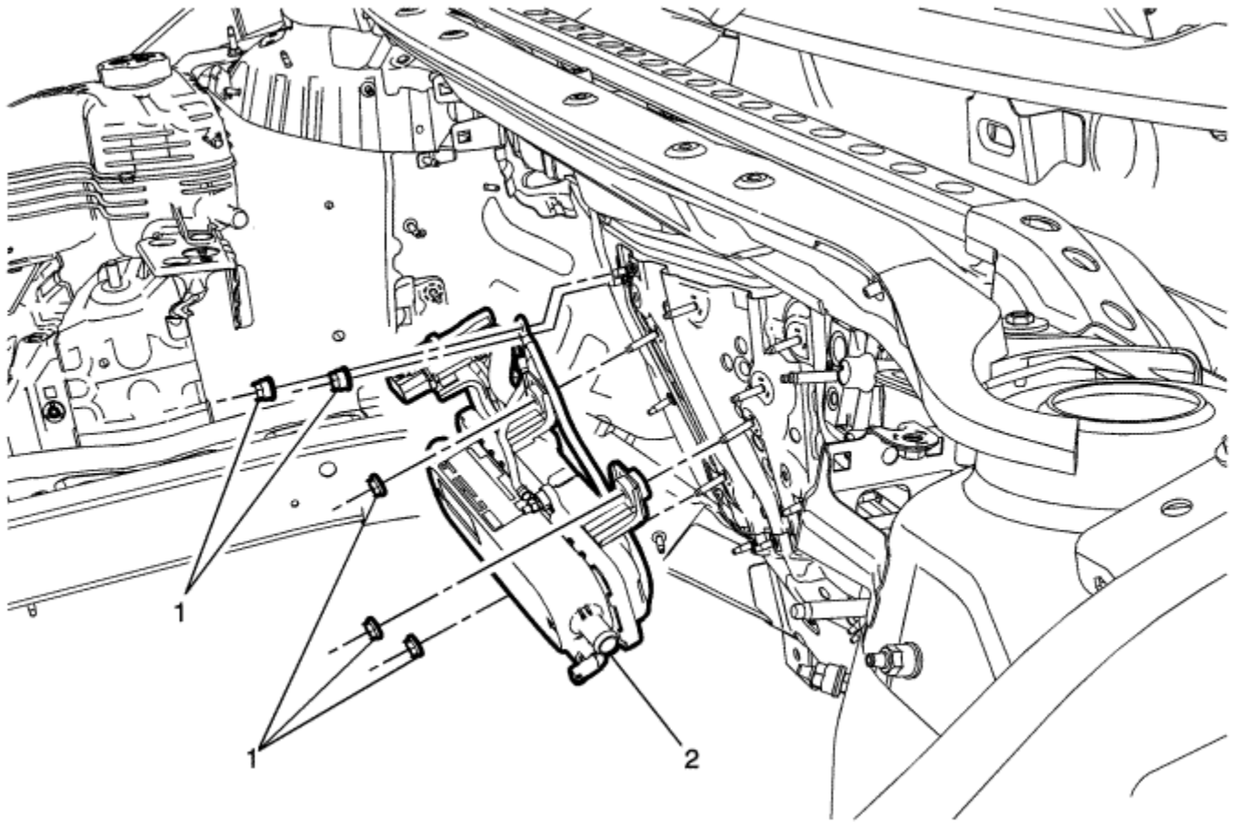

Callout	Component Name
Danger: Always perform the High Voltage Disabling procedure prior to servicing any High Voltage component or connection. Personal Protection Equipment (PPE) and proper procedures must be followed. The High Voltage Disabling procedure will perform the following tasks: Identify how to disable high voltage.	

-
- Identify how to test for the presence of high voltage.
- Identify conditions under which high voltage is always present and personal protection equipment (PPE) and proper procedures must be followed.

Failure to follow the procedures exactly as written may result in serious injury or death.

Preliminary Procedure

1. Disable hybrid high voltage system. Refer to High Voltage Disabling and High Voltage Enabling .
2. Remove the intake manifold. Refer to Intake Manifold Replacement .
3. Remove the heater outlet hose. Refer to Heater Outlet Hose Replacement .
4. Remove the heater inlet hose. Refer to Heater Inlet Hose Replacement .
5. Disconnect the electrical connectors from the heater coolant cooler. Refer to High Voltage Connectors .

1	Heater Coolant Heater Nuts (Qty: 5) **Caution:** Refer to Fastener Caution in the Preface section. **Tighten** 9 N·m (80 lb in)
2	Heater Coolant Heater **Note:** Replace corroded hose clamps and brackets.

&#169© Copyright Chevrolet. All rights reserved

Heater Water Auxiliary Pump Replacement

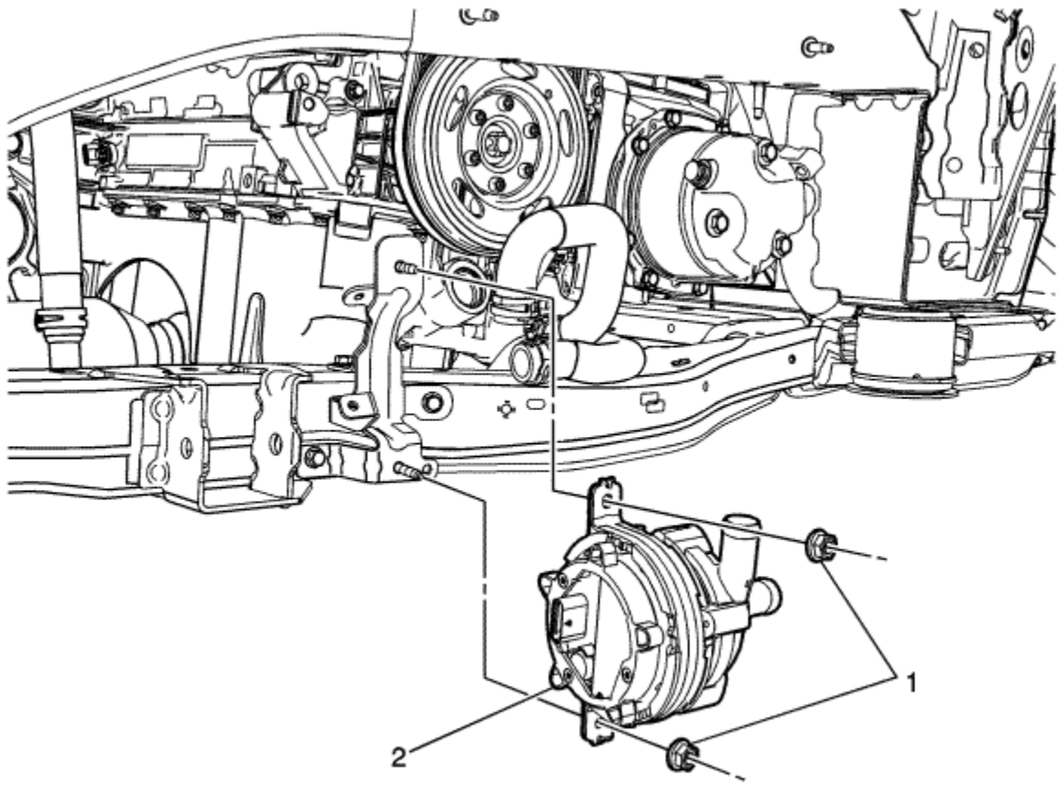

Callout	Component Name
Danger: Always perform the High Voltage Disabling procedure prior to servicing any High Voltage component or connection. Personal Protection Equipment (PPE) and proper procedures must be followed. The High Voltage Disabling procedure will perform the following tasks: Identify how to disable high voltage.	

-
- Identify how to test for the presence of high voltage.
- Identify conditions under which high voltage is always present and personal protection equipment (PPE) and proper procedures must be followed.

Failure to follow the procedures exactly as written may result in serious injury or death.

Preliminary Procedures

1. Disable the high voltage system. Refer to High Voltage Disabling and High Voltage Enabling .
2. Drain the coolant. Refer to Cooling System Draining and Filling .
3. Remove the front wheelhouse front liner on the passenger side. Refer to Front Wheelhouse Front Liner Replacement .
4. Remove the heater coolant heater heat shield. Refer to Heater Coolant Heater Heat Shield Replacement .
5. Remove the heater inlet and outlet pipe. Refer to Heater Inlet And Outlet Pipe Replacement .
6. Disconnect the electrical connector from the heater water auxiliary pump.

1	Heater Water Auxiliary Pump Nuts (Qty: 2) **Caution:** Refer to Fastener Caution in the Preface section. **Tighten** 9 N·m (80 lb in)
2	Heater Water Auxiliary Pump

&#169© Copyright Chevrolet. All rights reserved

Accessory DC Power Control Module Cooling Air Inlet Duct Replacement

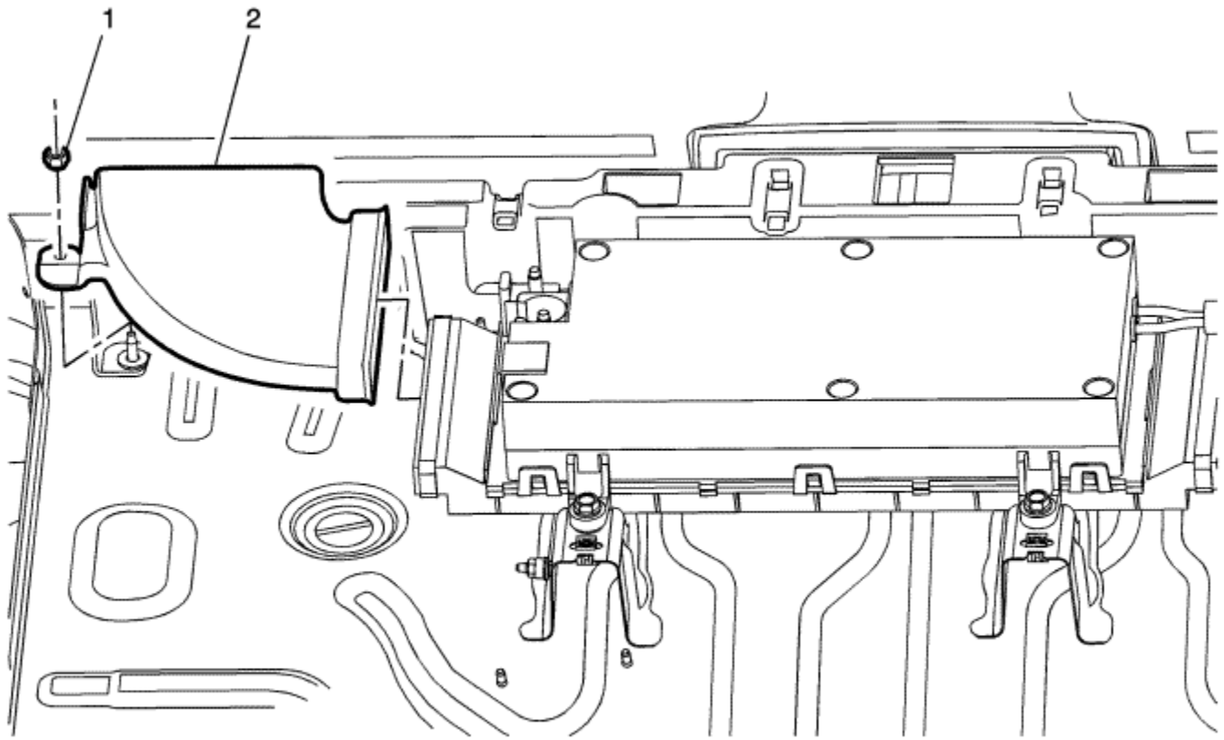

Callout	Component Name
Preliminary Procedure Remove the floor stowage trim compartment. Refer to Rear Compartment Floor Stowage Trim Compartment Replacement .	
	Accessory DC Power Control Module Cooling Air Inlet Duct Fastener

1	**Caution:** Refer to Fastener Caution in the Preface section. **Tighten** 1.5 N·m (13 lb in)
2	Accessory DC Power Control Module Cooling Air Inlet Duct

© Copyright Chevrolet. All rights reserved

Accessory DC Power Control Module Cooling Air Duct Replacement

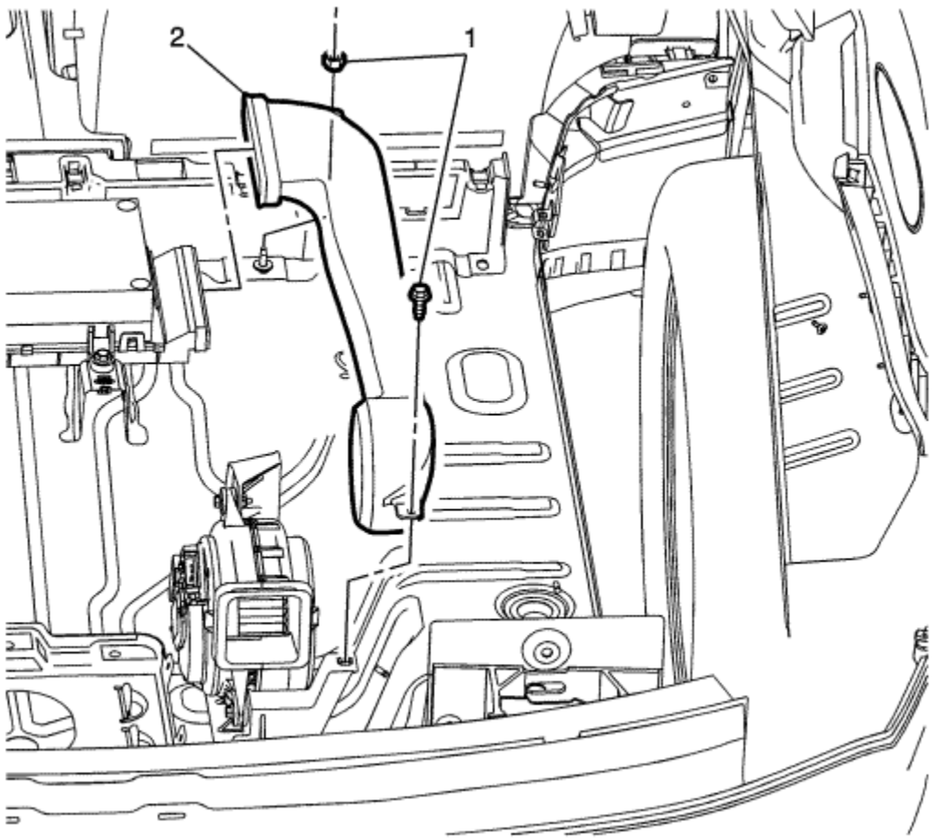

Callout	Component Name
Preliminary Procedure Remove the floor stowage trim compartment. Refer to Rear Compartment Floor Stowage Trim Compartment Replacement .	
	Accessory DC Power Control Module Cooling Air Duct Fastener (Qty: 2)

1	**Caution:** Refer to Fastener Caution in the Preface section. **Tighten** 1.5 N·m (13 lb in)
2	Accessory DC Power Control Module Cooling Air Duct

© Copyright Chevrolet. All rights reserved

Accessory DC Power Control Module Cooling Blower Replacement

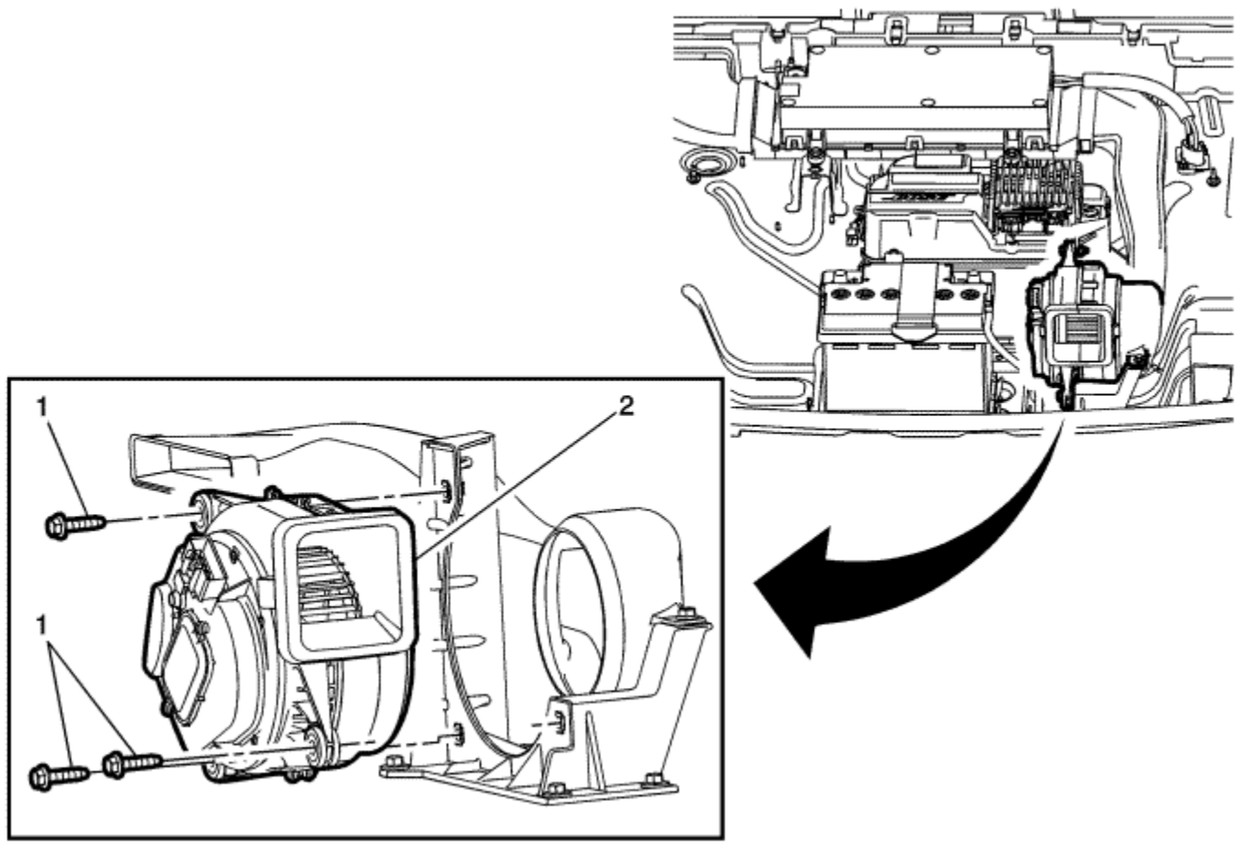

Callout	Component Name
Preliminary Procedures	

1. Remove the floor stowage trim compartment. Refer to Rear Compartment Floor Stowage Trim Compartment Replacement .
2. Remove 12 volt battery. Refer to Battery Replacement .
3. Disconnect the DC power control module electrical connector.

1	Accessory DC Power Control Module Cooling Blower Fastener (Qty: 3) **Caution:** Refer to Fastener Caution in the Preface section.
2	Accessory DC Power Control Module Cooling Blower

© Copyright Chevrolet. All rights reserved

Heater Water Shutoff Valve Replacement

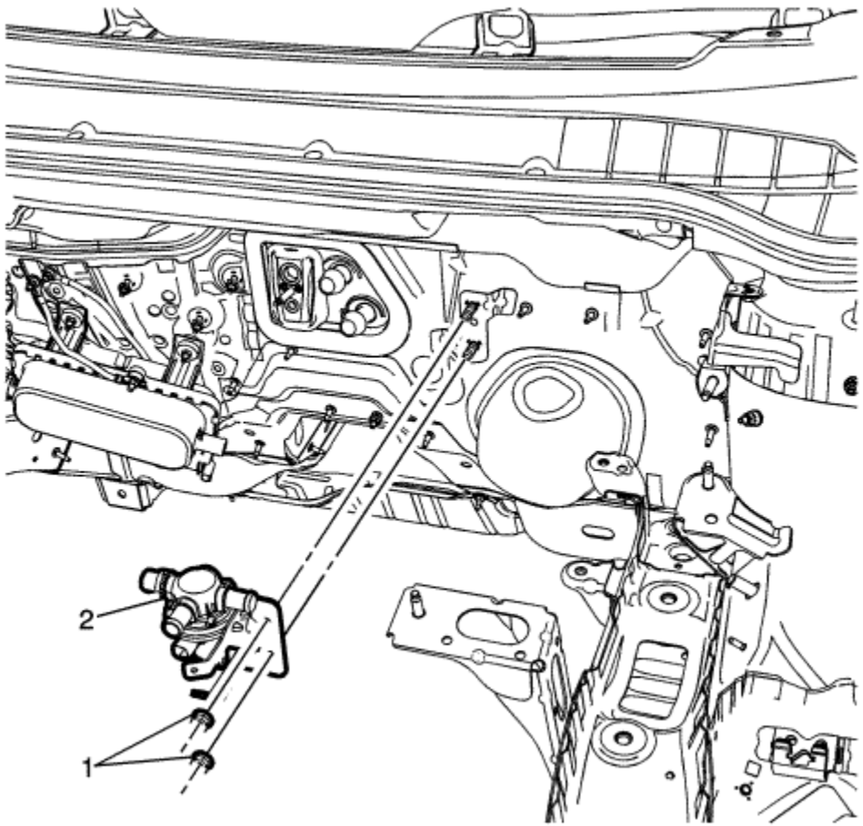

Callout	Component Name
Danger: Always perform the High Voltage Disabling procedure prior to servicing any High Voltage component or connection. Personal Protection Equipment (PPE) and proper procedures must be followed. The High Voltage Disabling procedure will perform the following tasks: Identify how to disable high voltage.	

-
- Identify how to test for the presence of high voltage.
- Identify conditions under which high voltage is always present and personal protection equipment (PPE) and proper procedures must be followed.

Failure to follow the procedures exactly as written may result in serious injury or death.

Preliminary Procedures

1. Disable high voltage system. Refer to High Voltage Disabling and High Voltage Enabling .
2. Pinch and remove the heater water shutoff valve actuator inlet hose from valve. Refer to Heater Water Shutoff Valve Actuator Inlet Hose Replacement .
3. Pinch and remove the heater water shutoff valve inlet hose from valve. Refer to Heater Water Shutoff Valve Inlet Hose Replacement .
4. Pinch and remove the heater water auxiliary pump inlet hose from valve. Refer to Heater Water Auxiliary Pump Inlet Hose Replacement .

1	Heater Water Shutoff Valve Nuts (Qty: 2). **Caution:** Refer to Fastener Caution in the Preface section. **Tighten** 9 N·m (80 lb in)
2	Heater Water Shutoff Valve **Note:** Prevent coolant contact with electrical connectors. **Procedure** 1. Check and fill the coolant. Refer to Cooling System Draining and Filling . 2. Perform the heater water shutoff valve learn procedure.

&#169© Copyright Chevrolet. All rights reserved

Heater Water Shutoff Valve Actuator Inlet Hose Replacement

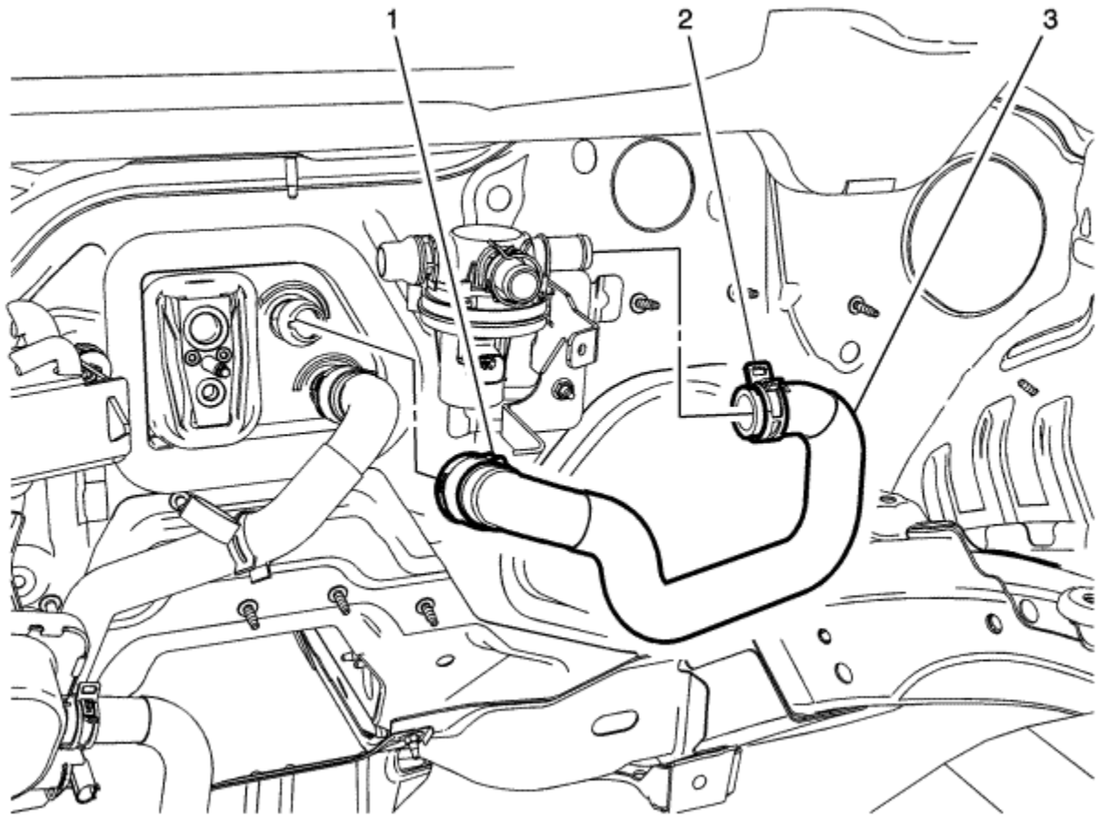

Callout	Component Name
Danger: Always perform the High Voltage Disabling procedure prior to servicing any High Voltage component or connection. Personal Protection Equipment (PPE) and proper procedures must be followed. The High Voltage Disabling procedure will perform the following tasks: Identify how to disable high voltage.	

-
- Identify how to test for the presence of high voltage.
- Identify conditions under which high voltage is always present and personal protection equipment (PPE) and proper procedures must be followed.

Failure to follow the procedures exactly as written may result in serious injury or death.

Preliminary Procedures

1. Disable hybrid high voltage system. Refer to High Voltage Disabling and High Voltage Enabling .
2. Drain the coolant. Refer to Cooling System Draining and Filling .
3. Remove the air cleaner resonator outlet duct. Refer to Air Cleaner Resonator Outlet Duct Replacement .

1	Heater Water Shutoff Valve Actuator Inlet Hose Quick Connect
2	Heater Water Shutoff Valve Actuator Inlet Hose Clamp **Procedure** Reposition the heater water shutoff valve actuator inlet hose clamp using the *BO-38185* pliers. **Special Tools** *BO-38185* Hose Clamp Pliers For equivalent regional tools, refer to Special Tools .
3	Heater Water Shutoff Valve Actuator Inlet Hose **Note:** Replace corroded hose clamps and brackets.

&#169© Copyright Chevrolet. All rights reserved

Heater Water Shutoff Valve Inlet Hose Replacement

Special Tools

BO-38185 Hose Clamp Pliers

For equivalent regional tools, refer to Special Tools .

Removal Procedure

Danger: Always perform the High Voltage Disabling procedure prior to servicing any High Voltage component or connection. Personal Protection Equipment (PPE) and proper procedures must be followed.

The High Voltage Disabling procedure will perform the following tasks:

- Identify how to disable high voltage.
- Identify how to test for the presence of high voltage.
- Identify conditions under which high voltage is always present and personal protection equipment (PPE) and proper procedures must be followed.

Failure to follow the procedures exactly as written may result in serious injury or death.

1. Disable the high voltage system. Refer to High Voltage Disabling .

   Note: Replace corroded hose clamps and brackets.

2. Drain the cooling system. Refer to Cooling System Draining and Filling .
3. Remove the air cleaner resonator outlet duct. Refer to Air Cleaner Resonator Outlet Duct Replacement .

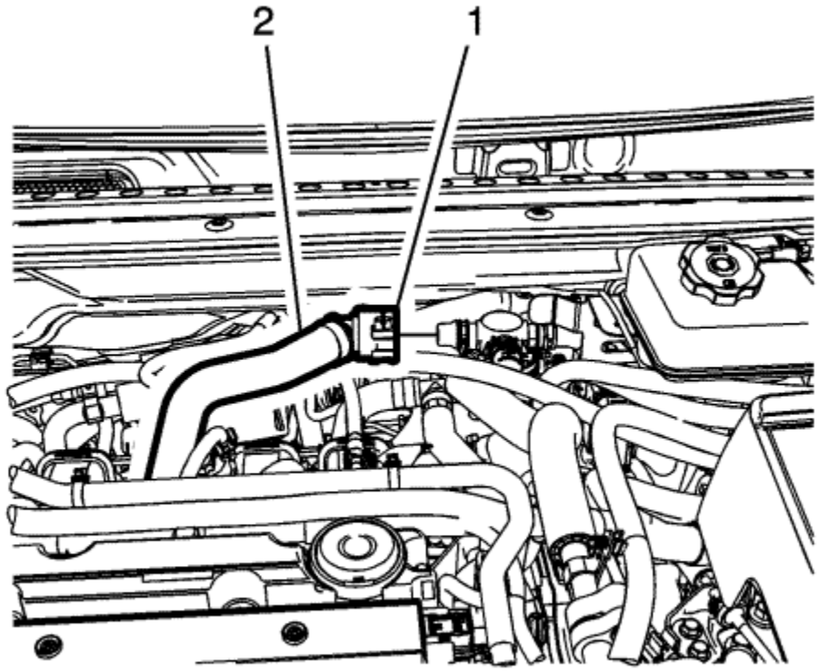

4. Disconnect the heater water shutoff valve inlet hose quick connect fitting (1) at the heater water shutoff valve.
5. Remove the heater water shutoff valve inlet hose (2) from the heater water shutoff valve.

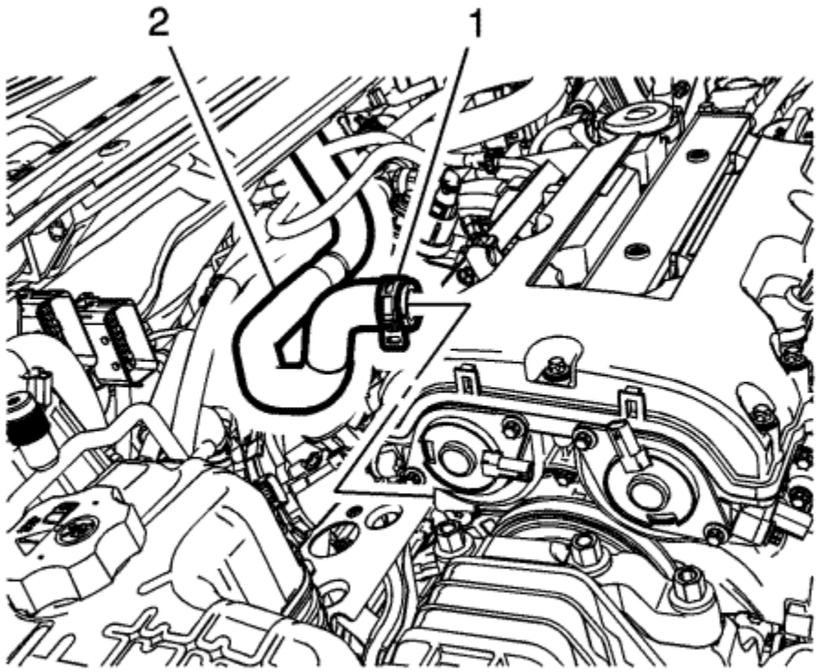

6. Remove the heater water shutoff valve inlet hose clamp (1) at engine using *BO-38185* pliers .
7. Remove the heater water shutoff valve inlet hose (2) from engine.
8. Remove the heater water shutoff valve inlet hose from the vehicle.

Installation Procedure

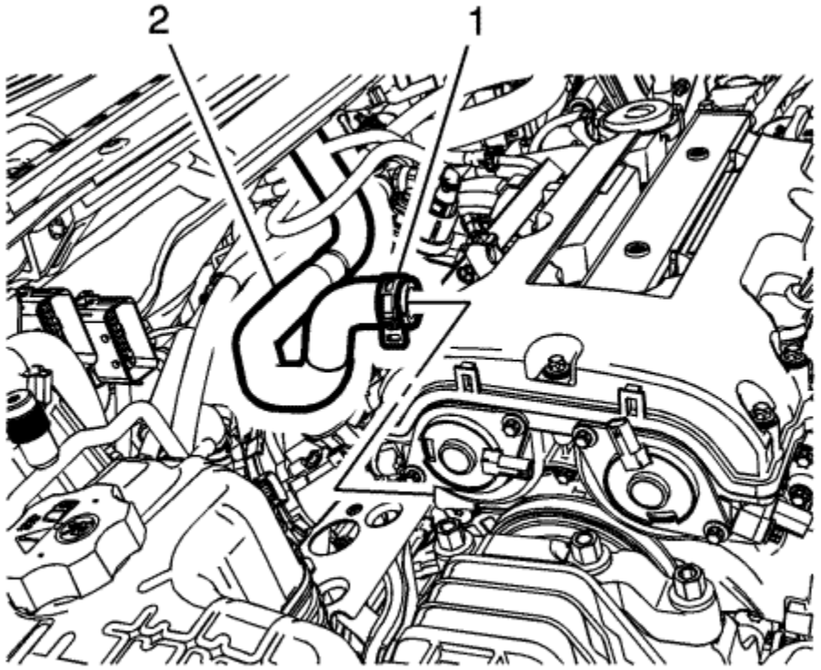

1. Install the heater water shutoff valve inlet hose to the vehicle.
2. Install the heater water shutoff valve inlet hose (2) to the engine.
3. Install the heater water shutoff valve inlet hose clamp (1) at the engine using *BO-38185* pliers .

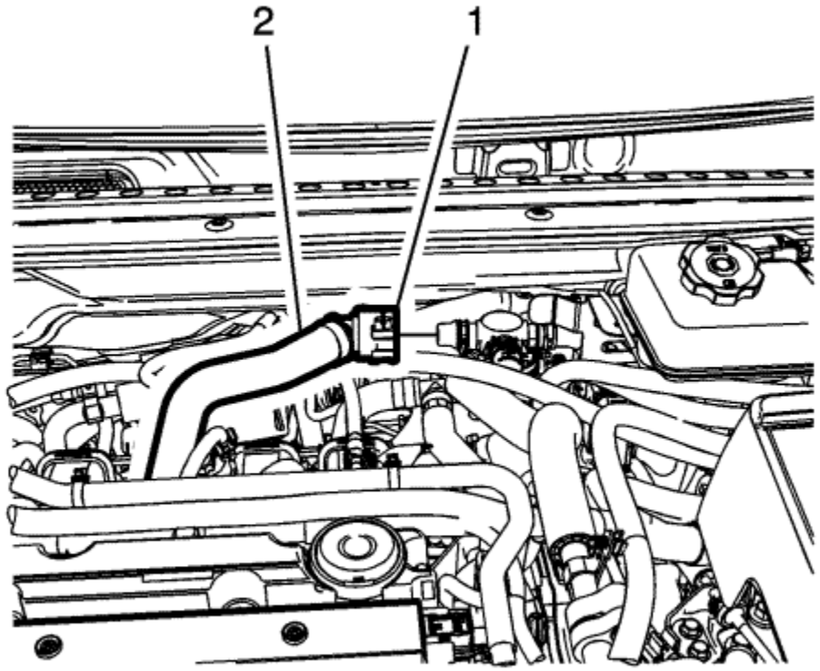

4. Install the heater water shutoff valve inlet hose (2) to the heater water shutoff valve.
5. Connect the heater water shutoff valve inlet hose quick connect fitting (1) at heater water shutoff valve.
6. Install the air cleaner resonator outlet duct. Refer to Air Cleaner Resonator Outlet Duct Replacement .
7. Fill the cooling system. Refer to Drive Motor Generator Power Inverter Module Cooling System Draining and Filling .
8. Enable the high voltage system. Refer to High Voltage Enabling .

&#169© Copyright Chevrolet. All rights reserved

Heater Water Auxiliary Pump Inlet Hose Replacement

Special Tools

BO-38185 Hose Clamp Pliers

For equivalent regional tools, refer to Special Tools .

Removal Procedure

1. Disconnect the battery negative cable. Refer to Battery Negative Cable Disconnection and Connection .

   Note: Replace corroded hose clamps and brackets.

2. Drain the cooling system. Refer to Cooling System Draining and Filling .
3. Remove the air cleaner resonator outlet duct. Refer to Air Cleaner Resonator Outlet Duct Replacement .

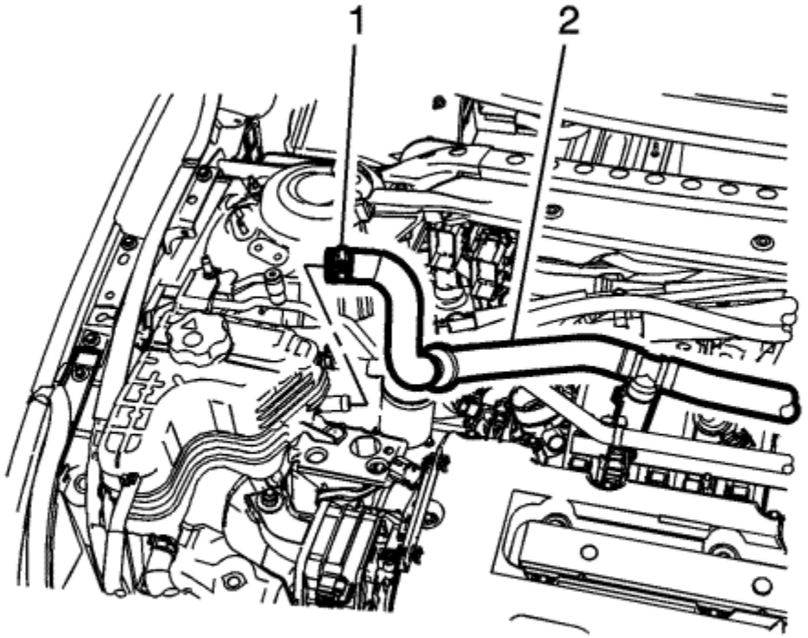

4. Remove the heater water auxiliary pump inlet hose clamp (1) at the coolant reservoir using *BO-38185* pliers .
5. Remove the heater water auxiliary pump inlet hose (2) from the coolant reservoir.

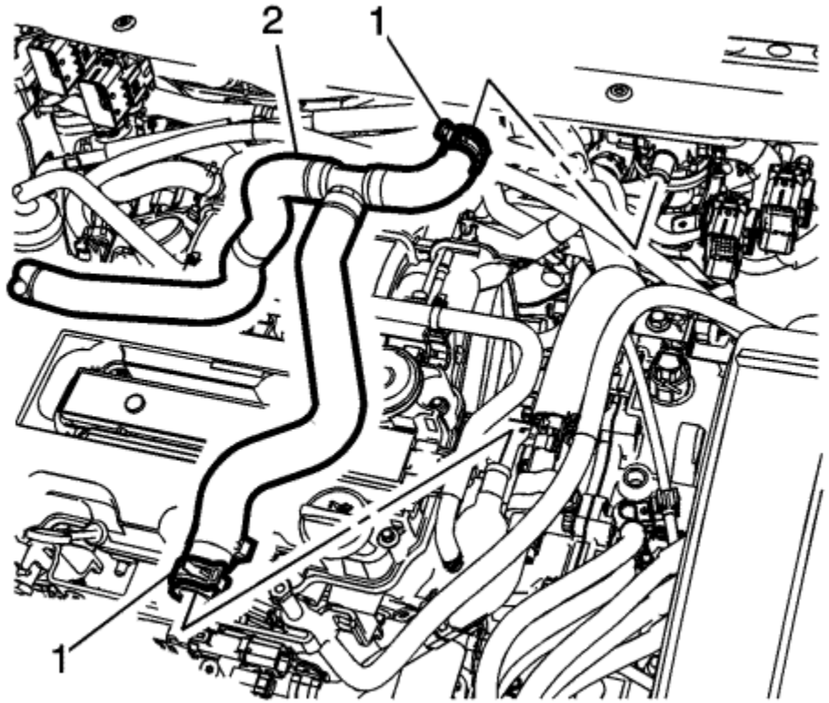

6. Remove the heater water auxiliary pump inlet hose clamps (1) at engine and heater water shutoff valve using *BO-38185* pliers.
7. Remove the heater water auxiliary pump inlet hose (2) from the engine and heater water shutoff valve.

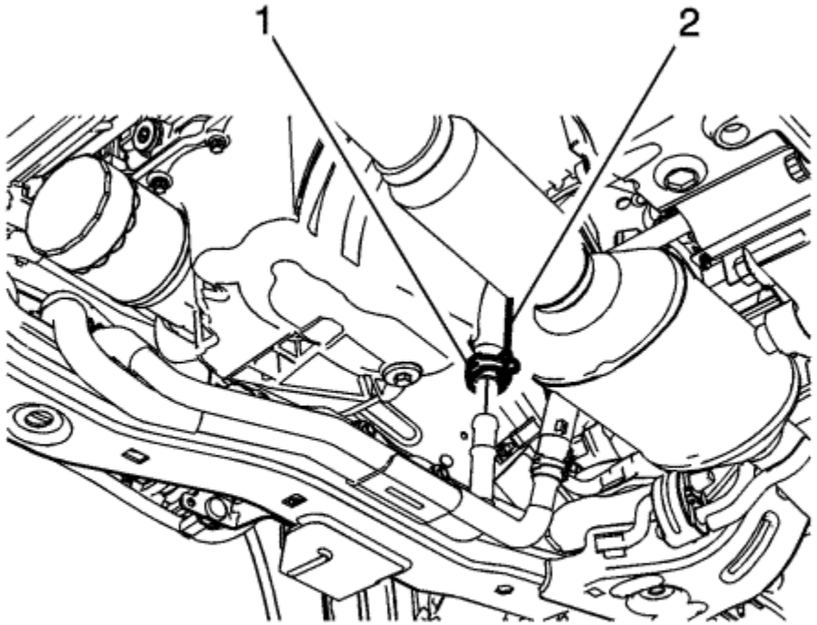

8. Remove the heater water auxiliary pump inlet hose clamp (1) at the heater inlet and outlet pipe using *BO-38185* pliers.

   Danger: Do not use a service jack in locations other than those specified to lift this vehicle. Lifting the vehicle with a jack in those other locations could cause the vehicle to slip off the jack and roll; this could cause injury or death.

9. Raise and support the vehicle. Refer to Lifting and Jacking the Vehicle .
10. Remove the heater water auxiliary pump inlet hose (2) from the heater inlet and outlet pipe.
11. Remove the heater water auxiliary pump inlet hose from the vehicle.

Installation Procedure

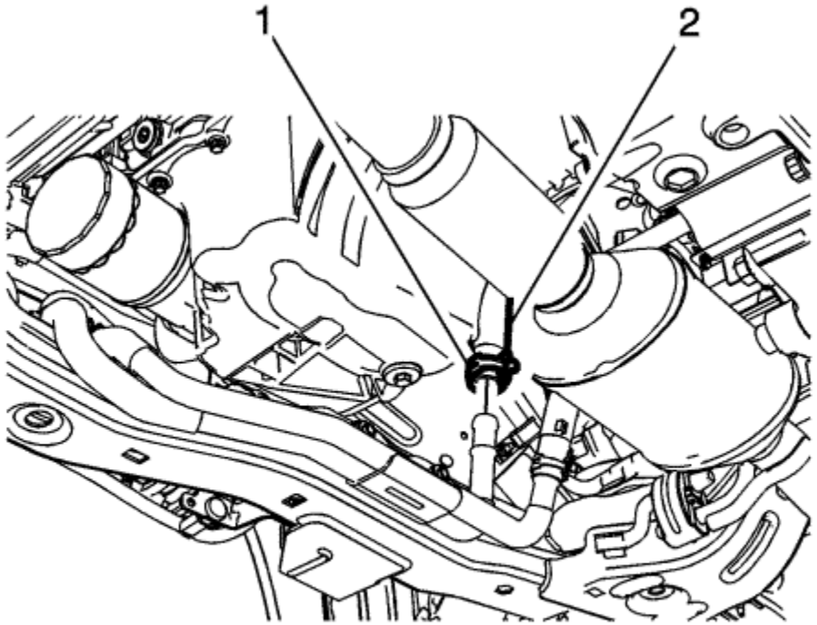

1. Install the heater water auxiliary pump inlet hose to the vehicle.
2. Install the heater water auxiliary pump inlet hose (2) to the engine and heater water shutoff valve.
3. Install the heater water auxiliary pump inlet hose clamp (1) at the heater inlet and outlet pipe using *BO-38185* pliers.

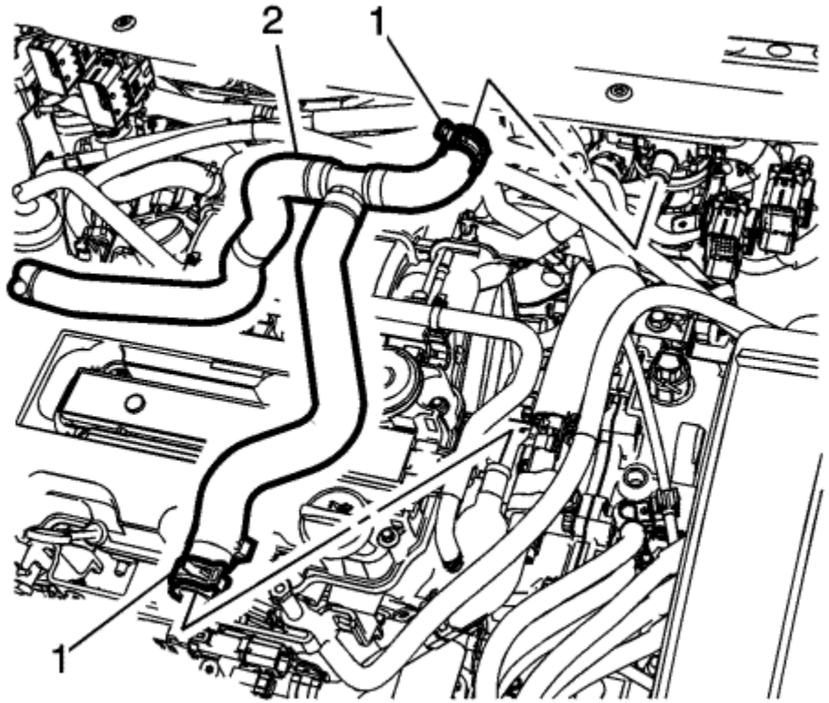

4. Install the heater water auxiliary pump inlet hose (2) to the engine and heater water shutoff valve.
5. Install the heater water auxiliary pump inlet hose clamps (1) at the engine and heater water shutoff valve using *BO-38185* pliers.

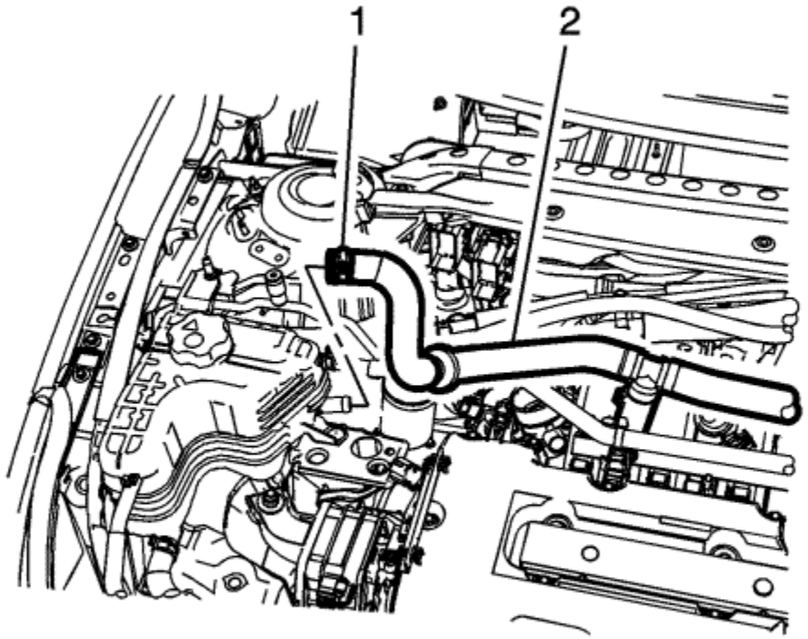

6. Install the heater water auxiliary pump inlet hose (2) to the coolant reservoir.
7. Install the heater water auxiliary pump inlet hose clamp (1) at the coolant reservoir using *BO-38185* pliers.
8. Lower the vehicle.
9. Install the air cleaner resonator outlet duct. Refer to Air Cleaner Resonator Outlet Duct Replacement .
10. Fill the cooling system. Refer to Cooling System Draining and Filling .
11. Connect the battery negative cable. Refer to Battery Negative Cable Disconnection and Connection .

© Copyright Chevrolet. All rights reserved

Heater Vent Hose Replacement

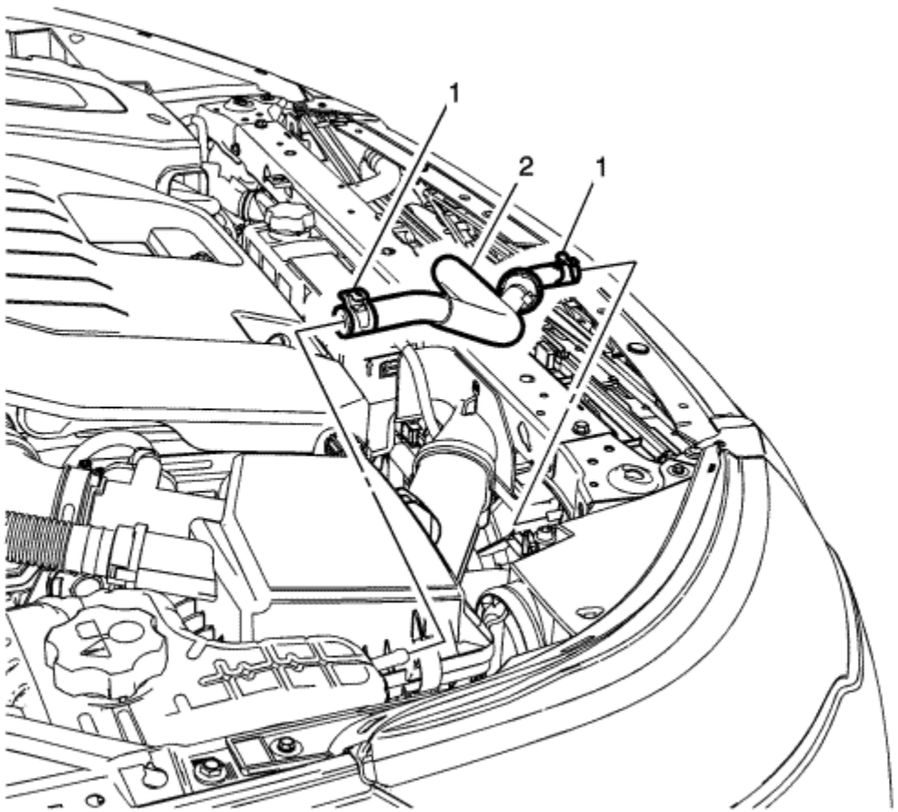

Callout	Component Name
Danger: Always perform the High Voltage Disabling procedure prior to servicing any High Voltage component or connection. Personal Protection Equipment (PPE) and proper procedures must be followed. The High Voltage Disabling procedure will perform the following tasks: Identify how to disable high voltage.	

-
- Identify how to test for the presence of high voltage.
- Identify conditions under which high voltage is always present and personal protection equipment (PPE) and proper procedures must be followed.

Failure to follow the procedures exactly as written may result in serious injury or death.

Preliminary Procedure

1. Disable the high voltage system. Refer to High Voltage Disabling and High Voltage Enabling .
2. Drain the coolant. Refer to Cooling System Draining and Filling .

1	Heater Vent Hose Clamps (Qty 2) **Procedure** Reposition the heater vent hose clamps using *BO-38185* pliers **Special Tools** *BO-38185* Hose Clamp Pliers For equivalent regional tools, refer to Special Tools .
2	Heater Vent Hose **Note:** Replace corroded hose clamps and brackets.

&#169© Copyright Chevrolet. All rights reserved

Heater Outlet Hose Vapour Vent Hose Replacement

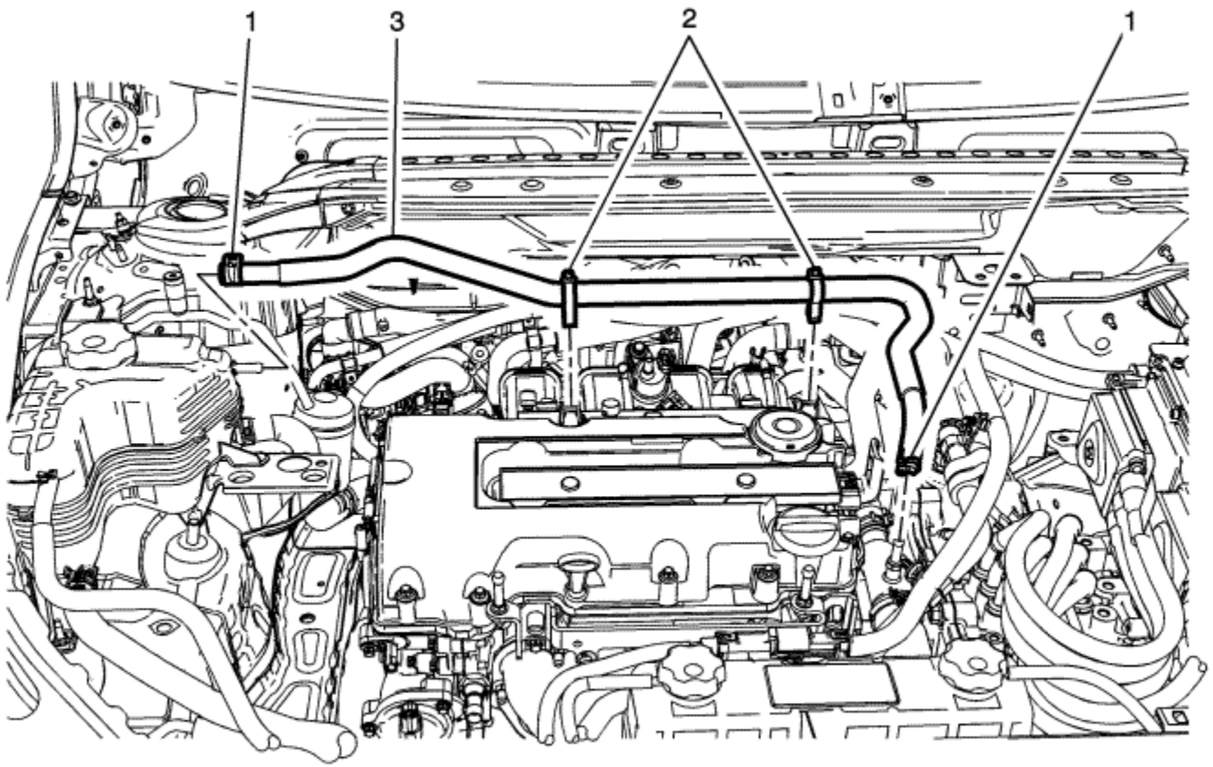

Callout	Component Name
Danger: Always perform the High Voltage Disabling procedure prior to servicing any High Voltage component or connection. Personal Protection Equipment (PPE) and proper procedures must be followed. The High Voltage Disabling procedure will perform the following tasks: Identify how to disable high voltage.	

-
- Identify how to test for the presence of high voltage.
- Identify conditions under which high voltage is always present and personal protection equipment (PPE) and proper procedures must be followed.

Failure to follow the procedures exactly as written may result in serious injury or death.

Preliminary Procedures

1. Disable the high voltage system. Refer to High Voltage Disabling and High Voltage Enabling .
2. Partially drain the coolant. Refer to Cooling System Draining and Filling .
3. Remove the air cleaner resonator outlet duct. Refer to Air Cleaner Resonator Outlet Duct Replacement .

1	Heater Outlet Hose Vapour Vent Hose Clamps (Qty: 2) **Procedure** Reposition the heater outlet vapour vent hose clamps using *BO-38185* pliers **Special Tools** *BO-38185* Hose Clamp Pliers For equivalent regional tools, refer to Special Tools .
2	Heater Outlet Hose Vapour Vent Hose Retainers (Qty: 2)
3	Heater Outlet Hose Vapour Vent Hose **Note:** Replace corroded hose clamps and brackets.

&#169© Copyright Chevrolet. All rights reserved

Heating and Air Conditioning System Description and Operation

Heating

The heating system uses the engine and a high voltage heater to provide heat to the passenger compartment. The high voltage heater is used when the engine is not running and passenger compartment heat is requested. The high voltage heater provides different levels of heat depending on the amount of heat needed and outside temperature.

The HVAC Control Module turns on the coolant pump and monitors the temperature sensors in the passenger compartment, outside air, engine radiator, high voltage heater and the engine to determine the position of the coolant flow control valve and if the high voltage heater is needed. Passenger compartment heat is provided by air flowing through the heater core. The heater core is heated by coolant from either the engine or the high voltage heater.

The engine cooling system circulates a 50/50 mixture of Dex-cool and distilled water.

Air Conditioning

The A/C system uses the refrigerant R-134a which is a gas at very low temperatures and can transfer heat from the passenger compartment and high voltage battery to the outside air. The A/C system is mechanically protected with the use of a high pressure relief valve on the A/C compressor. If the refrigerant pressure sensor were to fail or if the A/C system becomes restricted and the refrigerant pressure continued to rise, the high pressure relief will open and release refrigerant from the system.

The high voltage electric A/C compressor is a self contained high voltage inverter, electric motor, and direct coupled compressor. The electric A/C compressor has the ability to run and provide cooling performance while the vehicle engine is not running. This feature enables the electric A/C compressor to run at a speed independent of the engine. The electronic climate control module and the Vehicle Integration Control Module (VICM) will command the electric A/C compressor to a speed necessary to maintain a desired cooling level rather than cycle the electric A/C compressor on and off.

The electric A/C compressor builds pressure and adds heat to the refrigerant gas. The refrigerant gas flows from the electric A/C compressor to the condenser where heat is transferred to the outside air when the refrigerant condenses from a gas to a liquid. The liquid refrigerant then flows to a thermal expansion valve (TXV) on the battery chiller. The TXV lowers the pressure of the liquid refrigerant which makes the refrigerant expand from a liquid to a vapour. The low pressure refrigerant vapour flows into the battery chiller and begins to boil and change into a gas as the refrigerant absorbs heat from the battery coolant also flowing inside the battery chiller. The battery coolant and refrigerant are separated by several plates inside the battery chiller. The liquid refrigerant also flows to a second TXV on the evaporator. The low pressure refrigerant vapour flows from the TXV into the evaporator and begins to boil and change into a gas as the refrigerant absorbs heat from the passenger compartment air that is flowing through the outside of the evaporator. The moisture in the passenger compartment air condenses on the outside of the evaporator and flows down to the bottom of the HVAC module where it drains outside the passenger compartment through a drain hose. The low pressure refrigerant gas then flows from the battery chiller and the evaporator back to the electric A/C compressor where the cycle is repeated.

© Copyright Chevrolet. All rights reserved

Special Tools

Illustration	Tool Number/ Description
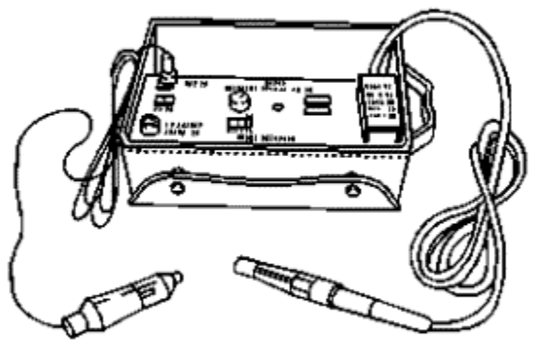	GE 39400-A J 39400-A Halogen Leak Detector
	GE 42220 J 42220 Universal 12V Leak Detection Lamp

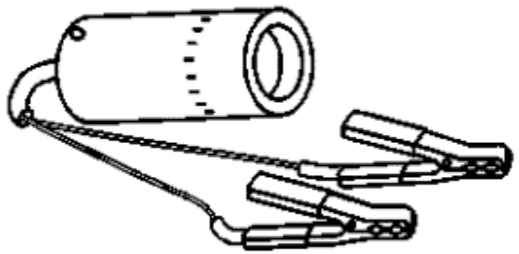	
	GE 43872 J 43872 Fluorescent Dye Cleaner
	GE 45037-A

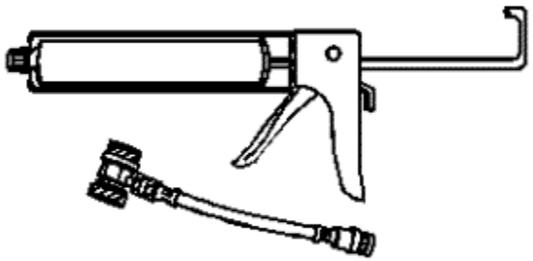	J 45037-A A/C PAG Oil Injector
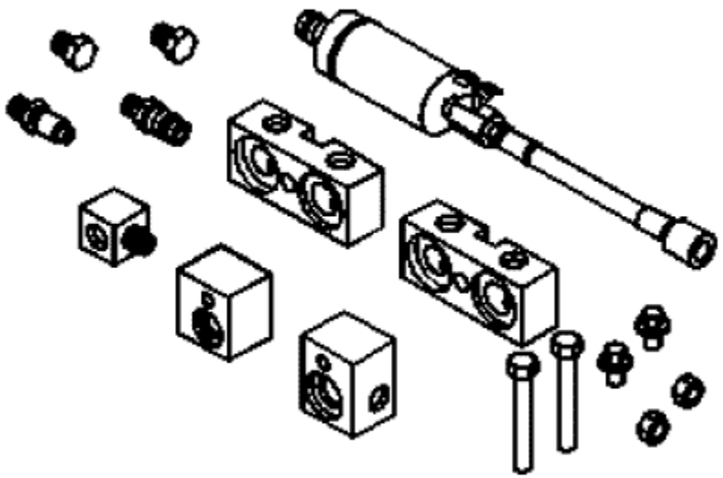	GE 45268 J 45268 Flush Adaptor Kit

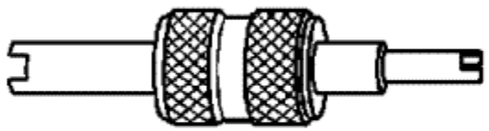	GE 46246 J 46246 Valve Core Removal Tool
	GE 48800 CoolTech A/C Recharge Machine
	GE 48997

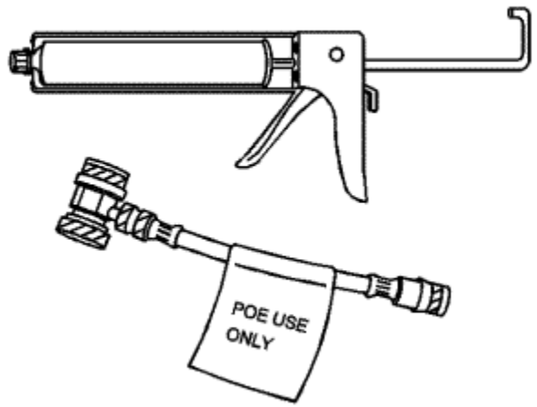	Hybrid A/C Oil Injector Adapter Hose

© Copyright Chevrolet. All rights reserved

Sensor Resistance Table

Temperature		Ambient Air Temp Sensor	Inside Air Temp Sensor	Evaporator Temperature sensor	HVAC Duct temperature Sensors
°C	°F	(K ohms)	(K ohms)	(K ohms)	(K ohms)
-40	-40	333.6	174.5	100.9	100.9
-35	-31	241.1	125.1	72.7	72.3
-30	-22	176.1	90.7	53.1	52.6
-25	-13	129.9	66.5	39.1	38.6
-20	-4	96.8	49.3	29.1	28.6
-15	5	72.8	36.9	21.8	21.4
-10	14	55.3	27.9	16.5	16.1
-5	23	42.3	21.3	12.6	12.3
0	32	32.7	16.4	9.7	9.4
5	41	25.4	12.7	7.6	7.3
10	50	19.9	10	5.9	5.7
15	59	15.7	7.9	4.7	4.4
20	68	12.5	6.3	3.7	3.5
25	77	10.0	5.0	3.0	2.8
30	86	8.1	4.0	2.4	2.2
35	95	6.5	3.3	1.9	1.8
40	104	5.3	2.7	1.5	1.5
45	113	4.4	2.2	1.2	1.2
50	122	3.6	1.8	1.0	1.0
55	131	3.0	1.5	0,8	0.8
60	140	2.5	1.2	0.7	0.7
65	140	2.1	1.0	0.6	0.6
70	158	1.8	.9	0.5	0.5
75	167	1.4	.8	0.44	0.44
80	176	1.2	.6	0.37	0.37

85	185	1.0	.5	0.32	0.32

© Copyright Chevrolet. All rights reserved

HVAC Schematics

Figure 1: Power, Ground, Data Communication and Blower Controls
Figure 2: Actuators
Figure 3: Temperature Sensors
Figure 4: Cabin Heater
Figure 5: Compressor Controls

© Copyright Chevrolet. All rights reserved

HVAC Component Replacement Reference

Scan Tool Name	Component Code/Schematic Name	Service Name	Repair Instruction Name
Passenger Compartment Humidity, Passenger Compartment Humidity Sensor Temperature, Windscreen Temperature	B160 Humidity/Windscreen Temperature Sensor	Humidity/Windscreen Temperature Sensor	Inside Air Moisture and Windscreen Temperature Sensor Replacement
Air Recirculation Door Actuator	M46 Air Recirculation Door Actuator	Air Recirculation Door Actuator	Air Inlet Valve Actuator Replacement
Left Temperature Door Actuator	M614 Air Temperature Actuator	Air Temperature Actuator	Temperature Valve Actuator Replacement
Mode Door Actuator	M37 Mode Door Actuator	Mode Door Actuator	Mode Control Cam Actuator Replacement
Upper Left Duct Air Temperature Sensor	B7F Air Temperature Sensor-Duct Upper	Duct Air Temperature Sensor-Upper	Duct Air Temperature Sensor Replacement - Upper
Lower Left Duct Air Temperature Sensor	B7B Air Temperature Sensor-Duct Lower	Duct Air Temperature Sensor - Lower	Duct Air Temperature Sensor Replacement - Lower
A/C Evaporator Temperature Sensor	B222 A/C Evaporator Refrigerant Low Side Temperature Sensor	Evaporator Refrigerant Low Side Temperature Sensor	Air Conditioning Refrigerant Temperature Sensor Replacement
A/C Evaporator Temperature Sensor	B39 Evaporator Temperature Sensor	Evaporator Temperature Sensor	Air Conditioning Refrigerant Temperature Sensor Replacement
Sunload Sensor	B10B Ambient Light/Sunload Sensor	Inside Air Temperature, Ambient Light and Sunload sensor	Sun Load Temperature and Headlamp Automatic Control Ambient Light Sensor Replacement
Passenger Compartment Air Temperature Sensor	B10B Inside Air Temperature/Ambient Light/Sunload Sensor	Inside Air Temperature, Ambient Light and Sunload sensor	Sun Load Temperature and Headlamp Automatic Control Ambient Light Sensor Replacement
Blower Motor Control Module	K8 Blower Motor Control Module	Blower Motor Control Module	Blower Motor Control Module Replacement
Blower Motor	M8 Blower Motor	Blower Motor	Blower Motor Replacement
A/C Low Side Pressure Sensor	B1 A/C Refrigerant Pressure Sensor	A/C Refrigerant Pressure Sensor	Air Conditioning Refrigerant Pressure Sensor Replacement - Low Pressure
A/C High Side Pressure Sensor	B1 A/C Refrigerant Pressure Sensor	A/C Refrigerant High Side Pressure Sensor	Air Conditioning Refrigerant Pressure Sensor Replacement - High Pressure
	B135 Coolant Heater	Coolant Heater Temperature	

Heater Core Coolant Temperature	Temperature Sensor	Sensor	Coolant Temperature Sensor Replacement
Passenger Compartment Heater Coolant Control Solenoid Valve	Q66 Passenger Compartment Heater Coolant Control Solenoid Valve	Passenger Compartment Heater Coolant Control Solenoid Valve	Heater Water Shutoff Valve Replacement
Auxiliary Coolant Pump	G36 Auxiliary Coolant Pump	Auxiliary Coolant Pump	Heater Water Auxiliary Pump Replacement
Coolant Heater Control Module	K10 Coolant Heater Control Module	Coolant Heater Control Module	Heater Coolant Heater Replacement
Ambient Air Temperature Sensor	B23 Ambient Air Temperature Sensor	Ambient Air Temperature Sensor	Ambient Air Temperature Sensor Replacement
Radio/HVAC Control	A20 Radio/HVAC Control	Radio/HVAC Control	Radio Control Assembly Replacement
Remote Heater and Air Conditioning Control Module	K33 HVAC Control Module	HVAC Control Module	Heater and Air Conditioning Remote Control Replacement

© Copyright Chevrolet. All rights reserved

DTC B0163

Diagnostic Instructions

- Perform the Diagnostic System Check - Vehicle prior to using this diagnostic procedure.
- Review Strategy Based Diagnosis for an overview of the diagnostic approach.
- Diagnostic Procedure Instructions provides an overview of each diagnostic category.

DTC Descriptors

DTC B0163 02: Passenger Compartment Temperature Sensor Circuit Short to Ground

DTC B0163 05: Passenger Compartment Temperature Sensor Circuit High Voltage/Open

Diagnostic Fault Information

Circuit	Short to Ground	Open/High Resistance	Short to Voltage	Signal Performance
Signal Terminal 3	B0163 02	B0163 05	B0163 05	1
Low Reference	-	B0163 05, B0183 05	--	--
1. HVAC Malfunction				

Circuit/System Description

The ambient light/sunload sensor includes the sunload sensor and passenger compartment temperature sensor.

This sensor assembly provides information about:

- Sun heat intensity
- Passenger compartment temperature

The vehicle uses a sunload sensor that is integrated into one sensor assembly along with the passenger compartment temperature sensor. Low reference and signal circuits enable the sensor to operate. The sensor signal varies between 0-5 V.

The passenger compartment temperature sensor is a negative temperature co-efficient thermistor. A signal and low reference circuit enables the sensor to operate. As the air temperature increases, the sensor resistance decreases. The sensor signal varies between 0-5 V.

Bright or high intensity light causes the vehicles interior temperature to increase. The HVAC system compensates for the increased temperature by diverting additional cool air into the vehicle.

Conditions for Running the DTC

- Vehicle in Service Mode.
- The HVAC control module is ON.

Conditions for Setting the DTC

B0163 02 or B0163 05

The HVAC control module detects the sensor signal out of range. The signal voltage is less than 0.1 V or greater than 4.9 V for more than 50 ms.

Action Taken When the DTC Sets

- The system will use the last valid values as default.
- If no value is read at the time of fault, the HVAC control module uses 0 W/m².

Conditions for Clearing the DTC

B0163 02 or B0163 05

The sensor signal is within specified range between 0.1-4.9 V.

Reference Information

Schematic Reference

HVAC Schematics

Connector End View Reference

Component Connector End Views

Description and Operation

Automatic HVAC Description and Operation

Electrical Information Reference

- Circuit Testing
- Connector Repairs
- Testing for Intermittent Conditions and Poor Connections
- Wiring Repairs

Scan Tool Reference

Control Module References for scan tool information

Circuit/System Testing

1. Vehicle OFF and all vehicle systems OFF, disconnect the harness connector at the B10B ambient light/sunload sensor. It may take up to 2 minutes for all vehicle systems to power down.
2. Test for less than 10 Ω between the low reference circuit terminal 6 and ground.
   If 10 Ω or greater
   2.1. Vehicle OFF, disconnect the harness connector at the K33 HVAC control module.
   2.2. Test for less than 2 Ω in the low reference circuit end to end.
   If 2 Ω or greater, repair the open/high resistance in the circuit.
   If less than 2 Ω, replace the K33 HVAC control module.
   If less than 10 Ω
3. Vehicle in Service Mode.
4. Verify the scan tool parameter Passenger Compartment Air Temperature (Unfiltered) is less than -35°F.
   If -35°F or greater
   4.1. Vehicle OFF, disconnect the harness connector at the K33 HVAC control module.
   4.2. Test for infinite resistance between the signal circuit terminal 4 and ground.
   If less than infinite resistance, repair the short to ground on the circuit.
   If infinite resistance, replace the K33 HVAC control module.
   If less than -35°F
5. Install a 3 A fused jumper wire between the signal circuit terminal 3 and the low reference circuit terminal 6.
6. Verify the scan tool parameter Passenger Compartment Air Temperature (Unfiltered) is greater than 240°F.
   If 240°F or less
   6.1. Vehicle OFF, disconnect the harness connector at the K33 HVAC control module, vehicle in Service Mode.
   6.2. Test for less than 1 V between the signal circuit and ground.

If 1 V or greater, repair the short to voltage on the circuit.
If less than 1 V
6.3. Vehicle OFF
6.4. Test for less than 2 Ω in the signal circuit end to end.
If 2 Ω or greater, repair the open/high resistance in the circuit.
If less than 2 Ω, replace the K33 HVAC control module.

If greater than 240°F

7. Test or replace the B10B ambient light sensor.

Repair Instructions

Perform the Diagnostic Repair Verification after completing the diagnostic procedure.

- HVAC Component Replacement Reference
- Control Module References for HVAC control module replacement, programming and setup

&#169© Copyright Chevrolet. All rights reserved

DTC B0173, B0178, or B3933

Diagnostic Instructions

- Perform the Diagnostic System Check - Vehicle prior to using this diagnostic procedure.
- Review Strategy Based Diagnosis for an overview of the diagnostic approach.
- Diagnostic Procedure Instructions provides an overview of each diagnostic category.

DTC Descriptors

DTC B0173 02: Upper Left Duct Air Temperature Sensor Circuit Short to Ground

DTC B0173 05: Upper Left Duct Air Temperature Sensor Circuit High Voltage/Open

DTC B0178 02: Lower Left Duct Air Temperature Sensor Circuit Short to Ground

DTC B0178 05: Lower Left Duct Air Temperature Sensor Circuit High Voltage/Open

DTC B3933 02: Air Conditioning Evaporator Temperature Sensor Circuit Short to Ground

DTC B3933 05: Air Conditioning Evaporator Temperature Sensor Circuit High Voltage/Open

Diagnostic Fault Information

Circuit	Short to Ground	Open/High Resistance	Short to Voltage	Signal Performance
Upper Left Duct Air Temperature Sensor Signal	B0173 02	B0173 05	B0173 05	1
Lower Left Duct Air Temperature Sensor Signal	B0178 02	B0178 05	B0178 05	1
Air Conditioning Evaporator Temperature Sensor Signal	B3933 02	B3933 05	B3933 05	1
Low Reference	--	B0173 05, B0178 05, B3933 05	B0173 05, B0178 05, B3933 05	-
1. Air Temperature Malfunction				

Circuit/System Description

The air temperature sensors are 2-wire negative temperature co-efficient thermistors. The vehicle uses the following air temperature sensors:

- Air temperature sensor left upper
- Air temperature sensor left lower
- Evaporator temperature sensor

A signal and low reference circuit enables the sensor to operate. As the air temperature surrounding the sensor increases, the sensor resistance decreases. The sensor signal voltage decreases as the resistance decreases. The sensor operates within a temperature range between -40 to +85°C (-40 to +185°F). The sensor signal varies between 0-5 V. The HVAC control module converts the signal to a range between 0-255 counts. As the air temperature increases the count value will decrease. If the HVAC control module detects a malfunctioning sensor, then the control module software will use a default air temperature value. The default action ensures that the HVAC system can adjust the inside air temperature near the desired temperature until the condition is corrected.

Conditions for Running the DTC

The vehicle is turned ON.

Conditions for Setting the DTC

The HVAC control module detects the sensor signal out of range. The signal voltage is less than 0.1 V or greater than 4.9 V for more than 50 ms.

Action Taken When the DTC Sets

A default value is used when the DTC is set.

Conditions for Clearing the DTC

- The DTC will become history if the HVAC control module no longer detects a failure.
- The history DTC will clear after 100 fault-free ignition cycles.

Reference Information

Schematic Reference

HVAC Schematics

Connector End View Reference

Component Connector End Views

Description and Operation

Automatic HVAC Description and Operation

Electrical Information Reference

- Circuit Testing
- Connector Repairs
- Testing for Intermittent Conditions and Poor Connections
- Wiring Repairs

Scan Tool Reference

Control Module References for scan tool information

Circuit/System Testing

1. Vehicle OFF and all vehicle systems OFF, disconnect the harness connector at the appropriate temperature sensor. It may take up to 2 minutes for all vehicle systems to power down.
2. Test for less than 10 Ω between the low reference circuit terminal B and ground.

   If 10 Ω or greater

   2.1. Vehicle OFF, disconnect the harness connector at the K33 HVAC control module.
   2.2. Test for less than 2 Ω in the low reference circuit end to end.
   If 2 Ω or greater, repair the open/high resistance in the circuit.
   If less than 2 Ω, replace the K33 HVAC control module.

   If less than 10 Ω
3. Vehicle in Service Mode.
4. Verify the scan tool parameter is less than -39°F.
   - Lower Left Duct Air Temperature Sensor
   - Upper Left Duct Temperature Sensor
   - A/C Evaporator Temperature Sensor

   If greater than -39°F

   4.1. Vehicle OFF, disconnect the harness connector at the K33 HVAC control module.
   4.2. Test for infinite resistance between the signal circuit terminal A and ground.
   If less than infinite resistance, repair the short to ground on the circuit.
   If infinite resistance, replace the K33 HVAC control module.

   If -39°F or less

5. Install a 3 A fused jumper wire between the signal circuit and the low reference circuit terminal B.
6. Verify the scan tool parameter is greater than 240°F.
   - Lower Left Duct Air Temperature Sensor
   - Upper Left Duct Temperature Sensor
   - A/C Evaporator Temperature Sensor

   If 240°F or less

   6.1. Vehicle OFF, disconnect the harness connector at the K33 HVAC control module, vehicle in Service Mode.
   6.2. Test for less than 1 V between the signal circuit and ground.
   If 1 V or greater, repair the short to voltage on the circuit.
   If less than 1 V
   6.3. Vehicle OFF
   6.4. Test for less than 2 Ω in the signal circuit end to end.
   If 2 Ω or greater, repair the open/high resistance in the circuit.
   If less than 2 Ω, replace the K33 HVAC control module.

   If greater than 240°F
7. Test or replace the temperature sensor.

Component Testing

1. Test the air temperature sensor by varying the sensor temperature while monitoring the sensor resistance.
2. Compare the readings with the Sensor Resistance Table and verify that the resistance is within 5 percent of the specification.
   If not within the specified range, replace the sensor.

Repair Instructions

Perform the Diagnostic Repair Verification after completing the diagnostic procedure.

- HVAC Component Replacement Reference
- Control Module References for HVAC control module replacement, programming and setup

&#169© Copyright Chevrolet. All rights reserved

DTC B018A, B048C, B048F, or B1395

Diagnostic Instructions

- Perform the Diagnostic System Check - Vehicle prior to using this diagnostic procedure.
- Review Strategy Based Diagnosis for an overview of the diagnostic approach.
- Diagnostic Procedure Instructions provides an overview of each diagnostic category.

DTC Descriptors

DTC B018A 02: Windscreen Temperature Sensor Circuit Short to Ground

DTC B018A 05: Windshield Temperature Sensor Circuit High Voltage/Open

DTC B048C 02: Humidity Sensor Humidity Circuit Short to Ground

DTC B048C 05: Humidity Sensor Humidity Circuit High Voltage/Open

DTC B048F 02: Humidity Sensor Temperature Circuit Short to Ground

DTC B048F 05: Humidity Sensor Temperature Circuit High Voltage/Open

DTC B1395 03: Control Module Voltage Reference Output Circuit Low Voltage

DTC B1395 07: Control Module Voltage Reference Output Circuit High Voltage

Diagnostic Fault Information

Circuit	Short to Ground	Open/High Resistance	Short to Voltage	Signal Performance
5 V Reference	B1395 03	B1395 03	B1395 07	-
Signal Terminal 2	B048C 02	B048C 05	B048C 05	-
Signal Terminal 5	B048F 02	B048F 05	B048F 05	-

Signal Terminal 4	B018A 02	B018A 05	B018A 05	-
Ground	-	B018A 05, B048C 05, B048F 05, B1395 03	--	--

Circuit/System Description

The windscreen temperature and inside moisture sensor integrates the relative humidity sensor, windscreen temperature sensor and humidity sensing element temperature sensor.

This sensor assembly provides information about:

- Relative humidity level on inside windscreen
- Temperature of the inside windscreen
- Temperature of the humidity sensor element

The relative humidity sensor measures the relative humidity on the compartment side of the windscreen. It also detects the temperature of the windscreen surface on the compartment side. Both values are used as control inputs for the HVAC control module application to calculate the fog risk on windscreen compartment side and ability to reduce fuel consumption by decreasing A/C compressor power to a minimum without causing any fog. The sensor will also enable partial recirculation mode in order to improve heat-up performance of the passenger compartment under cold ambient temperature conditions without the risk of mist build-up on the windscreen. The humidity sensor element temperature sensor supplies the temperature of the humidity sensor element. It is only needed if the thermal contact between the humidity sensing element and the inside windscreen surface is not sufficient.

Conditions for Running the DTC

- Vehicle in Service Mode.
- The HVAC control module is ON.

Conditions for Setting the DTC

B018A 02, B048C 02, B048C 02 or B1395 03

The HVAC control module detects the sensor signal out of range. The signal voltage is less than 0.1 V for more than 50 ms.

B018A 05, B048C 05, B048C 05 or B1395 07

The HVAC control module detects the sensor signal out of range. The signal voltage is greater than 4.9 V for more than 50 ms.

Action Taken When the DTC Sets

- The system will use the last valid values as default.
- If no value is read at the time of fault, the HVAC control module uses 60% for humidity.

Conditions for Clearing the DTC

The condition for setting the DTC is no longer present.

Reference Information

Schematic Reference

HVAC Schematics

Connector End View Reference

Component Connector End Views

Description and Operation

Automatic HVAC Description and Operation

Electrical Information Reference

- Circuit Testing
- Connector Repairs
- Testing for Intermittent Conditions and Poor Connections
- Wiring Repairs

Scan Tool Reference

Control Module References for scan tool information

Circuit/System Testing

1. Vehicle OFF and all vehicle systems OFF, disconnect the harness connector at the B160 windscreen temperature and inside moisture sensor. It may take up to 2

minutes for all vehicle systems to power down.

2. Test for less than 10 Ω between the low reference circuit terminal 3 and ground.

If 10 Ω or greater

2.1. Vehicle OFF, disconnect the harness connector at the K33 HVAC control module.

2.2. Test for less than 2 Ω in the low reference circuit end to end.

If 2 Ω or greater, repair the open/high resistance in the circuit.

If less than 2 Ω, replace the K33 HVAC control module.

If less than 10 Ω

3. Vehicle in Service Mode.

4. Test for 4.8-5.2 V between the 5 V reference circuit terminal 1 and ground.

If less than 4.8 V

4.1. Vehicle OFF, disconnect the harness connector at the K33 HVAC control module.

4.2. Test for infinite resistance between the 5 V reference circuit and ground.

If less than infinite resistance, repair the short to ground on the circuit.

If infinite resistance

4.3. Test for less than 2 Ω in the 5 V reference circuit end to end.

If 2 Ω or greater, repair the open/high resistance in the circuit.

If less than 2 Ω, replace the K33 HVAC control module.

If greater than 5.2 V

4.1. Vehicle OFF, disconnect the harness connector at the K33 HVAC control module, vehicle in Service Mode.

4.2. Test for less than 1 V between the 5 V reference circuit and ground.

If 1 V or greater, repair the short to voltage on the circuit.

If less than 1 V, replace the K33 HVAC control module.

If between 4.8-5.2 V

5. Verify the scan tool Windscreen Temperature and Passenger Compartment Humidity Sensor Temperature parameters are less than -39°F.

If -39°F or greater

5.1. Vehicle OFF, disconnect the harness connector at the K33 HVAC control module, vehicle in Service Mode.

5.2. Test for less than 1 V between the signal circuit terminals listed below and ground.

- Windscreen temperature sensor signal terminal 4
- Passenger compartment humidity sensor temperature signal terminal 5

If 1 V or greater, repair the short to voltage on the circuit.

If less than 1 V, replace the K33 HVAC control module.

If less than -39°F

6. Verify the scan tool Passenger Compartment Humidity parameters is greater than 95%.

If 95% or less

6.1. Vehicle OFF, disconnect the harness connector at the K33 HVAC control module, vehicle in Service Mode.

6.2. Test for less than 1 V between the signal circuit terminal 2 and ground.

If 1 V or greater, repair the short to voltage on the circuit.
If less than 1 V, replace the K33 HVAC control module.

If greater than 95%

7. Install a 3 A fused jumper wire between the signal circuit terminals listed below and the 5 V reference circuit terminal 1.
   - Windscreen temperature sensor signal terminal 4
   - Passenger compartment humidity sensor temperature signal terminal 5
8. Verify the scan tool Windscreen Temperature and Passenger Compartment Humidity Sensor Temperature parameters are greater than 239°F.

   If 239°F or less

   8.1. Vehicle OFF, disconnect the harness connector at the K33 HVAC control module.
   8.2. Test for infinite resistance between the signal circuit terminals listed below and ground.
   - Windscreen temperature sensor signal terminal 4
   - Passenger compartment humidity sensor temperature signal terminal 5

   If less than infinite resistance, repair the short to ground on the circuit.
   If infinite resistance
   8.3. Test for less than 2 Ω in the signal circuit end to end.
   If 2 Ω or greater, repair the open/high resistance in the circuit.
   If less than 2 Ω, replace the K33 HVAC control module.

   If greater than 239°F

9. Install a 3 A fused jumper wire between the passenger compartment humidity sensor signal circuit terminal 2 and the low reference circuit terminal 3.
10. Verify the scan tool Passenger Compartment Humidity Sensor parameter is less than 5%.

    If 5% or greater

    10.1. Vehicle OFF, disconnect the harness connector at the K33 HVAC control module.
    10.2. Test for less than 2 Ω in the signal circuit end to end.
    If 2 Ω or greater, repair the open/high resistance in the circuit.
    If less than 2 Ω, replace the K33 HVAC control module.

    If less than 5%

11. Test or replace the B160 windscreen temperature and inside moisture sensor.

Repair Instructions

Perform the Diagnostic Repair Verification after completing the diagnostic procedure.

- HVAC Component Replacement Reference
- Control Module References for HVAC control module replacement, programming and setup

&#169© Copyright Chevrolet. All rights reserved

DTC B0183

Diagnostic Instructions

- Perform the Diagnostic System Check - Vehicle prior to using this diagnostic procedure.
- Review Strategy Based Diagnosis for an overview of the diagnostic approach.
- Diagnostic Procedure Instructions provides an overview of each diagnostic category.

DTC Descriptors

DTC B0183 02: Solar Load Sensor Circuit Short to Ground

DTC B0183 05: Solar Load Sensor Circuit High Voltage/Open

Diagnostic Fault Information

Circuit	Short to Ground	Open/High Resistance	Short to Voltage	Signal Performance
Sensor Signal Terminal 3	B0163 02	B0163 05	B0163 05	1
Sensor Signal Terminal 4	B0183 02	B0183 05	B0183 05	1
Low Reference	-	B0163 05, B0183 05	--	--
1. HVAC Malfunction				

Circuit/System Description

The ambient light/sunload sensor includes the sunload sensor and passenger compartment temperature sensor.

This sensor assembly provides information about:

- Sun heat intensity
- Passenger compartment temperature

The vehicle uses a sunload sensor that is integrated into one sensor assembly along with the passenger compartment temperature sensor. Low reference and signal circuits

enable the sensor to operate. The sensor signal varies between 0-5 V.

The passenger compartment temperature sensor is a negative temperature co-efficient thermistor. A signal and low reference circuit enables the sensor to operate. As the air temperature increases, the sensor resistance decreases. The sensor signal varies between 0-5 V.

Bright or high intensity light causes the vehicles interior temperature to increase. The HVAC system compensates for the increased temperature by diverting additional cool air into the vehicle.

Conditions for Running the DTC

- Vehicle in Service Mode.
- The HVAC control module is ON.

Conditions for Setting the DTC

B0163 02 or B0163 05

The HVAC control module detects the sensor signal out of range. The signal voltage is less than 0.1 V or greater than 4.9 V for more than 50 ms.

B0183 02

The 5 V identification pulse is not received.

B0183 05

The input signal is static and greater than 4.8 V.

Action Taken When the DTC Sets

- The system will use the last valid values as default.
- If no value is read at the time of fault, the HVAC control module uses 0 W/m^2.

Conditions for Clearing the DTC

B0163 02 or B0163 05

The sensor signal is within specified range between 0.1-4.9 V.

B0183 02 or B0183 05

The sensor signal is within specified range between 0.1-4.9 V.

Reference Information

Schematic Reference

HVAC Schematics

Connector End View Reference

Component Connector End Views

Description and Operation

Automatic HVAC Description and Operation

Electrical Information Reference

- Circuit Testing
- Connector Repairs
- Testing for Intermittent Conditions and Poor Connections
- Wiring Repairs

Scan Tool Reference

Control Module References for scan tool information

Circuit/System Testing

1. Vehicle OFF and all vehicle systems OFF, disconnect the harness connector at the B10B ambient light/sunload sensor. It may take up to 2 minutes for all vehicle systems to power down.
2. Test for less than 10 Ω between the low reference circuit terminal 6 and ground.
   If 10 Ω or greater
   2.1. Vehicle OFF, disconnect the harness connector at the K33 HVAC control module.
   2.2. Test for less than 2 Ω in the low reference circuit end to end.
   If 2 Ω or greater, repair the open/high resistance in the circuit.
   If less than 2 Ω, replace the K33 HVAC control module.
   If less than 10 Ω

3. Vehicle in Service Mode.
4. Verify the Sunload scan tool parameter is less than 2 W/m2.

   If 2 W/m2 or greater

   4.1. Vehicle OFF, disconnect the harness connector at the K33 HVAC control module.
   4.2. Test for infinite resistance between the signal circuit terminal 4 and ground.
   If less than infinite resistance, repair the short to ground on the circuit.
   If infinite resistance, replace the K33 HVAC control module.

   If less than 2 W/m2

5. Install a 3 A fused jumper wire between the signal circuit terminal 4 and the low reference circuit terminal 6.
6. Verify the scan tool parameter is greater than 20 W/m2.

   If 20 W/m2 or less

   6.1. Vehicle OFF, disconnect the harness connector at the K33 HVAC control module, vehicle in Service Mode.
   6.2. Test for less than 1 V between the signal circuit terminal 4 and ground.
   If 1 V or greater, repair the short to voltage on the circuit.
   If less than 1 V
   6.3. Vehicle OFF
   6.4. Test for less than 2 Ω in the signal circuit end to end.
   If 2 Ω or greater, repair the open/high resistance in the circuit.
   If less than 2 Ω, replace the K33 HVAC control module.

   If greater than 20 W/m2

7. Test or replace the B10B ambient light sensor.

Repair Instructions

Perform the Diagnostic Repair Verification after completing the diagnostic procedure.

- HVAC Component Replacement Reference
- Control Module References for HVAC control module replacement, programming and setup

&#169© Copyright Chevrolet. All rights reserved

DTC B0193

Diagnostic Instructions

- Perform the Diagnostic System Check - Vehicle prior to using this diagnostic procedure.
- Review Strategy Based Diagnosis for an overview of the diagnostic approach.
- Diagnostic Procedure Instructions provides an overview of each diagnostic category.

DTC Descriptors

DTC B0193 01: Front Blower Motor Speed Circuit Short to Battery

DTC B0193 06: Front Blower Motor Speed Circuit Low Voltage/Open

Diagnostic Fault Information

Circuit	Short to Ground	Open/High Resistance	Short to Voltage	Signal Performance
B+	B0193 06	B0193 06	--	--
Control	B0193 06	B0193 06	B0193 01	-
Ground	-	B0193 06	--	--

Circuit/System Description

The blower motor control module is an interface between the HVAC control module and the blower motor. The blower motor speed control from the HVAC control module, battery positive and ground circuits enable the blower motor control module to operate. The HVAC control module provides a pulse width modulation (PWM) signal to the blower motor control module in order to command the blower motor speed. The blower motor control module transfers the PWM signal into a corresponding blower motor voltage. The voltage resides between 2-13 V and changes linear to the height of the PWM signal.

Conditions for Running the DTC

- Vehicle in Service Mode.
- The HVAC control module is ON.

Conditions for Setting the DTC

B0193 01

The voltage at the HVAC control module output to the blower motor control module is always high.

B0193 06

The voltage at the HVAC control module output to the blower motor control module is always low or floating.

Action Taken When the DTC Sets

The blower motor is inoperative.

Conditions for Clearing the DTC

The condition for setting the DTC is no longer present.

Reference Information

Schematic Reference

HVAC Schematics

Connector End View Reference

Component Connector End Views

Description and Operation

Automatic HVAC Description and Operation

Electrical Information Reference

- Circuit Testing
- Connector Repairs
- Testing for Intermittent Conditions and Poor Connections
- Wiring Repairs

Scan Tool Reference

Control Module References for scan tool information

Circuit/System Testing

1. Vehicle OFF and all vehicle systems OFF, disconnect the X1 harness connector at the K8 blower motor control module. It may take up to 2 minutes for all vehicle systems to power down.
2. Test for less than 10 Ω between the ground circuit terminal 5 and ground.
   If 10 Ω or greater
   2.1. Vehicle OFF.
   2.2. Test for less than 2 Ω in the ground circuit end to end.
   If 2 Ω or greater, repair the open/high resistance in the circuit.
   If less than 2 Ω, repair the open/high resistance in the ground connection.
   If less than 10 Ω
3. Vehicle in Service Mode, verify a test lamp illuminates between B+ circuit terminal 6 and ground.
   If the test lamp does not illuminate and the circuit fuse is good
   3.1. Vehicle OFF.
   3.2. Test for less than 2 Ω in the B+ circuit end to end.
   If 2 Ω or greater, repair the open/high resistance in the circuit.
   If less than 2 Ω, verify the fuse is not open and there is voltage at the fuse.
   If the test lamp does not illuminate and the circuit fuse is open
   3.1. Vehicle OFF.
   3.2. Test for infinite resistance between the B+ circuit and ground.
   If less than infinite resistance, repair the short to ground on the circuit.
   If infinite resistance, replace the K8 blower motor control module.
   If the test lamp illuminates
4. Connect a DMM between the control circuit X1 terminal 3 and the B+ circuit terminal 6.
5. Verify the proper voltages when changing the blower speed positions, with the HVAC in Comfort Mode.
   - OFF 12.0 V-11.0 V
   - Low 11.0 V-9.0 V
   - Med 1 9.0 V-7.0 V
   - Med 2 7.0 V-6.0 V
   - Med 3 6.0 V-5.0 V
   - Med 4 5.0 V-3.0 V

   HI 2.0 V-1.0 V

-

If not within the specified range

5.1. Vehicle OFF, disconnect the harness connector at the K33 HVAC control module.
5.2. Test for less than 1 V between the control circuit and ground.
If 1 V or greater, repair the short to voltage on the circuit.
If less than 1 V
5.3. Test for infinite resistance between the control circuit and ground.
If less than infinite resistance, repair the short to ground on the circuit.
If infinite resistance, replace the K33 HVAC control module.

If within the specified range

6. Connect the X1 harness connector at the K8 blower motor control module. Disconnect the harness connector at the M8 blower motor..
7. Connect a DMM between the control circuit terminal B and B+.
8. Verify the proper voltages when changing the blower speed positions, with the HVAC in Comfort Mode.
   - OFF 0 V
   - Low 2.0 V-3.0 V
   - Med 1 3.0 V-4.5 V
   - Med 2 4.5 V-6.5 V
   - Med 3 6.5 V-8.5 V
   - Med 4 8.5 V-10.0 V
   - HI 10.0 V-12.0 V

If not within the specified range

8.1. Vehicle OFF, disconnect the harness connector X2 at the K8 blower motor control module.
8.2. Test for less than 1 V between the control circuit and ground.
If 1 V or greater, repair the short to voltage on the circuit.
If less than 1 V
8.3. Test for infinite resistance between the control circuit and ground.
If less than infinite resistance, repair the short to ground on the circuit.
If infinite resistance, replace the K8 blower motor control module.

If within the specified range

9. Verify a test lamp illuminates between B+ circuit terminal A and ground.

If the test lamp does not illuminate

9.1. Vehicle OFF.
9.2. Test for less than 2 Ω in the B+ circuit end to end.
If 2 Ω or greater, repair the open/high resistance in the circuit.
If less than 2 Ω.

9.3. Test for infinite resistance between the B+ circuit and ground.
If less than infinite resistance, repair the short to ground on the circuit.
If infinite resistance, replace the M8 blower motor.

If the test lamp illuminates

10. All OK.

Repair Instructions

Perform the Diagnostic Repair Verification after completing the diagnostic procedure.

- HVAC Component Replacement Reference
- Control Module References for HVAC control module replacement, programming and setup

&#169© Copyright Chevrolet. All rights reserved

DTC B0223, B0233, B023A, or B0408

Diagnostic Instructions

- Perform the Diagnostic System Check - Vehicle prior to using this diagnostic procedure.
- Review Strategy Based Diagnosis for an overview of the diagnostic approach.
- Diagnostic Procedure Instructions provides an overview of each diagnostic category.

DTC Descriptors

DTC B0223 01: Recirculate Position Command 1 Circuit Short to Battery

DTC B0223 06: Recirculate Position Command 1 Circuit Short to Ground or Open

DTC B0233 01: Air Flow Control Circuit Short to Battery

DTC B0233 06: Air Flow Control Circuit Short to Ground or Open

DTC B023A 02: HVAC Actuators Supply Voltage Short to Ground

DTC B0408 01: Main Temperature Control Circuit Short to Battery

DTC B0408 06: Main Temperature Control Circuit Short to Ground or Open

Diagnostic Fault Information

Circuit	Short to Ground	Open/High Resistance	Short to Voltage	Signal Performance
Stepper Motors 12 V Reference	B023A 02, B0223 06, B0233 06, B0408 06	B0223 06, B0233 06, B0408 06	--	--
Recirculation Actuator Control 1	B0223 06	B0223 06	B0223 01	1
Recirculation Actuator Control 2	B0223 06	B0223 06	B0223 01	1
Recirculation Actuator Control 3	B0223 06	B0223 06	B0223 01	1
Recirculation Actuator Control 4	B0223 06	B0223 06	B0223 01	1

Air Temperature Actuator Control 1	B0408 06	B0408 06	B0408 01	1
Air Temperature Actuator Control 2	B0408 06	B0408 06	B0408 01	1
Air Temperature Actuator Control 3	B0408 06	B0408 06	B0408 01	1
Air Temperature Actuator Control 4	B0408 06	B0408 06	B0408 01	1
Mode Actuator Control 1	B0233 06	B0233 06	B0233 01	1
Mode Actuator Control 2	B0233 06	B0233 06	B0233 01	1
Mode Actuator Control 3	B0233 06	B0233 06	B0233 01	1
Mode Actuator Control 4	B0233 06	B0233 06	B0233 01	1
1. HVAC Malfunction				

Circuit/System Description

Stepper motors are used for temperature regulation, air distribution control and recirculation flap control.

With the appropriate switches at the HVAC control, the desired air temperature flap position, air distribution flap position and recirculation flap position can be put in. The selected values are passed to the HVAC control module via serial data. The HVAC control module supplies a 12 V reference voltage to the stepper motors and energises the 4 stepper motor coils with a pulsed ground signal. The stepper motors put the appropriate flap into the calculated position, in order to reach the put in temperature/position.

Conditions for Running the DTC

- Vehicle in Service Mode.
- The HVAC control module is ON.

Conditions for Setting the DTC

B023A 02

The stepper motors supply output is shorted to ground.

B0223 01, B0233 01 or B0408 01

At least one control output (of 4 possible outputs) of the appropriate stepper motor is shorted to voltage when motor starts moving. Faults are not detected when motor is already running or target position is already reached.

B0223 06, B0233 06 or B0408 06

At least one control output (of 4 possible outputs) of the appropriate stepper motor is shorted to ground or open when motor starts moving. Faults are not detected when motor is already running or target position is already reached.

Action Taken When the DTC Sets

B023A 02

- The affected output will be switched off for hardware protection.
- All stepper motors are deactivated.

B0223, B0233 or B0408

- The affected output will be switched off for hardware protection.
- The affected stepper motor is deactivated.

Conditions for Clearing the DTC

The condition for setting the DTC is no longer present.

Reference Information

Schematic Reference

HVAC Schematics

Connector End View Reference

Component Connector End Views

Description and Operation

Automatic HVAC Description and Operation

Electrical Information Reference

- Circuit Testing
- Connector Repairs
- Testing for Intermittent Conditions and Poor Connections
- Wiring Repairs

Scan Tool Reference

Control Module References for scan tool information

Circuit/System Testing

1. Vehicle OFF, disconnect the harness conector at the appropriate door actuator, vehicle in Service Mode.
2. Connect a test lamp between the B+ circuit terminal 2 and ground.
3. Verify the test lamp turns ON and OFF when commanding the actuator ON and OFF with a scan tool.

   If the test lamp is always OFF

   3.1. Vehicle OFF, disconnect the harness connector at the K33 HVAC control module.

   3.2. Test for infinite resistance between the control circuit and ground.

   If less than infinite resistance, repair the short to ground on the circuit.

   If infinite resistance

   3.3. Test for less than 2 Ω in the control circuit end to end.

   If 2 Ω or greater, repair the open/high resistance in the circuit.

   If less than 2 Ω, replace the K33 HVAC control module.

   If the test lamp is always ON

   3.1. Vehicle OFF, disconnect the harness connector at the K33 HVAC control module, vehicle in Service Mode.

   3.2. Test for less than 1 V between the control circuit and ground.

   If 1 V or greater, repair the short to voltage on the circuit.

   If less than 1 V, replace the K33 HVAC control module.

   If the test lamp turns ON and OFF
4. Vehicle OFF, disconnect the harness connector at the actuator and disconnect the harness connectors at the K33 HVAC control module, vehicle in Service Mode.
5. Test for less than 1 V between each actuator harness connector terminals listed below and ground.
   - Control Circuit - terminal 1
   - Control Circuit - terminal 3
   - Control Circuit - terminal 4
   - Control Circuit - terminal 6

   If 1 V or greater

   Repair the short to voltage on the circuit.

   If less than 1 V
6. Vehicle OFF.
7. Test for infinite resistance between each actuator harness connector terminals listed below and ground.
   - Control Circuit - terminal 1
   - Control Circuit - terminal 3
   - Control Circuit - terminal 4

- Control Circuit - terminal 6

If less than infinite resistance

Repair the short to ground on the circuit.

If Infinite resistance

8. Test for less than 2 Ω between each harness connector terminal listed below end to end.

   Note: See schematic for the K33 HVAC control module terminal numbers.

   - HVAC Actuator - terminal 1 and HVAC control module terminal
   - HVAC Actuator - terminal 3 and HVAC control module terminal
   - HVAC Actuator - terminal 4 and HVAC control module terminal
   - HVAC Actuator - terminal 6 and HVAC control module terminal

   If 2 Ω or greater

   Repair the open/high resistance in the circuit.

   If less than 2 Ω

9. Replace the actuator. The DTC should not set.

   If the DTC sets

   Replace the K33 HVAC control module.

   If the DTC does not set

10. All OK.

Repair Instructions

Perform the Diagnostic Repair Verification after completing the diagnostic procedure.

- HVAC Component Replacement Reference
- Control Module References for HVAC control module replacement, programming and setup

&#169© Copyright Chevrolet. All rights reserved

DTC B0468, B046B, or B046C

Diagnostic Instructions

- Perform the Diagnostic System Check - Vehicle prior to using this diagnostic procedure.
- Review Strategy Based Diagnosis for an overview of the diagnostic approach.
- Diagnostic Procedure Instructions provides an overview of each diagnostic category.

DTC Descriptors

DTC B0468 01: Auxiliary Heater Coolant Pump Control Circuit Short to Battery

DTC B0468 06: Auxiliary Heater Coolant Pump Control Circuit Low Voltage/Open

DTC B046B 00: Auxiliary Heater Coolant Pump Feedback Circuit Malfunction

DTC B046C 02: Auxiliary Heater Coolant Pump Enable Circuit Short to Ground

DTC B046C 05: Auxiliary Heater Coolant Pump Enable Circuit High Voltage/Open

Diagnostic Fault Information

Circuit	Short to Ground	Open/High Resistance	Short to Voltage	Signal Performance
Control Terminal 1	B046C 02	B0468 06, B046B 00, B046C 05	B046C 05	-
Control Terminal 3	B0468 06	B0468 06	B0468 01	-
Signal	B046B 00	B046B 00	B046B 00	--

Circuit/System Description

The auxiliary heater coolant pump is controlled with a pulse-width modulated control sent from the HVAC control module to the auxiliary heater coolant pump. The higher the duty cycle on the control the higher the pump speed. An enable signal from the HVAC control module to the auxiliary heater coolant pump provides overall control of the pump. When voltage is present, the pump can operate. The auxiliary heater coolant pump provides a hard-wired pulse-width modulated feedback signal to the HVAC control

module. During normal operation, this feedback signal provides pump speed information.

Conditions for Running the DTC

B0468 01

- The 12 V battery system voltage is greater than 9 V.
- The vehicle is in the RUN power mode.
- The HVAC system is turned ON.

B0468 06

- The 12 V battery system voltage is greater than 9 V.
- The vehicle is in the RUN power mode.
- The HVAC system is turned ON.

B046B 00

- The 12 V battery system voltage is greater than 9 V.
- The vehicle is in the RUN power mode.
- The HVAC system is turned ON.

B046C 02

- The 12 V battery system voltage is greater than 9 V.
- The vehicle is in the RUN power mode.
- The HVAC system is turned ON.

B046C 05

- The 12 V battery system voltage is greater than 9 V.
- The vehicle is in the RUN power mode.
- The HVAC system is turned ON.

Conditions for Setting the DTC

B0468 01

Requested PWM is not zero and the feedback from the Auxiliary Heater is always High.

B0468 06

Feedback from the auxiliary heater voltage is always low or floating.

B046B 00

PWM duty cycle/frequency out of range

B046C 02

PWM duty cycle/frequency out of range

B046B 05

PWM duty cycle/frequency out of range

Action Taken When the DTC Sets

The auxiliary heater coolant pump is disabled.

Conditions for Clearing the DTC

B0468 01

Feedback of auxiliary heater output corresponds with requested PWM signal.

B0468 06

Feedback of auxiliary heater output corresponds with requested PWM signal.

B046B 00

PWM duty cycle/frequency is within defined range

B046C 02

Requested status of the output is ON and feedback shows normal operation

B046B 05

Requested status of the output is OFF and feedback shows normal operation

Reference Information

Schematic Reference

HVAC Schematics

Connector End View Reference

Component Connector End Views

Description and Operation

Automatic HVAC Description and Operation

Electrical Information Reference

- Circuit Testing
- Connector Repairs
- Testing for Intermittent Conditions and Poor Connections
- Wiring Repairs

Scan Tool Reference

Control Module References for scan tool information

Circuit/System Verification

Vehicle in Service Mode, HVAC system turned ON, with a scan tool, verify that the Auxiliary Heater Coolant Pump Command is between 20%-90% and Auxiliary Heater Coolant Pump Feedback is about 50%

Circuit/System Testing

1. Vehicle OFF, disconnect the harness connector at the G36 auxiliary heater coolant pump.
2. Vehicle OFF and all vehicle systems OFF. It may take up to 2 minutes for all vehicle systems to power down.

3. Test for less than 10 Ω between the ground circuit terminal 4 and ground.

If 10 Ω or greater

3.1. Vehicle OFF.

3.2. Test for less than 2 Ω in the ground circuit end to end.

If 2 Ω or greater, repair the open/high resistance in the circuit.

If less than 2 Ω, repair the open/high resistance in the ground connection.

If less than 10 Ω

4. Vehicle ON, verify a test lamp illuminates between the B+ circuit terminal 5 and ground.

If the test lamp does not illuminate and the circuit fuse is good

4.1. Vehicle OFF.

4.2. Test for less than 2 Ω in the B+ circuit end to end.

If 2 Ω or greater, repair the open/high resistance in the circuit.

If less than 2 Ω, verify the fuse is not open and there is voltage at the fuse.

If the test lamp does not illuminate and the circuit fuse is open

4.1. Vehicle OFF.

4.2. Test for infinite resistance between the B+ circuit and ground.

If less than infinite resistance, repair the short to ground on the circuit.

If infinite resistance, replace the G36 auxiliary heater coolant pump..

If the test lamp illuminates

5. Vehicle ON, connect a test lamp between the enable circuit terminal 1 and the ground circuit terminal 4.
6. Verify the test lamp turns ON and OFF when Commanding the Auxiliary Coolant Pump Speed Command ON and OFF with a scan tool.

If the test lamp is always OFF

6.1. Vehicle OFF, disconnect the harness connector at the K33 HVAC control module.

6.2. Test for infinite resistance between the control circuit and ground.

If less than infinite resistance, repair the short to ground on the circuit.

If infinite resistance

6.3. Test for less than 2 Ω in the control circuit end to end.

If 2 Ω or greater, repair the open/high resistance in the circuit.

If less than 2 Ω, replace the K33 HVAC control module.

If the test lamp is always ON

6.1. Vehicle OFF, disconnect the harness connector at the K33 HVAC control module, vehicle ON.

6.2. Test for less than 1 V between the control circuit and ground.

If 1 V or greater, repair the short to voltage on the circuit.

If less than 1 V, replace the K33 HVAC control module.

If the test lamp turns ON and OFF

7. Connect a DVOM between the control circuit terminal 3 and the enable circuit terminal 1.
8. Verify the voltage changes when Commanding the Auxiliary Coolant Pump Speed Command ON and OFF with a scan tool.

If the voltage stays below 3 volts while commanding ON and OFF

8.1. Vehicle OFF, disconnect the harness connector at the K33 HVAC control module.
8.2. Test for infinite resistance between the control circuit and ground.
If less than infinite resistance, repair the short to ground on the circuit.
If infinite resistance
8.3. Test for less than 2 Ω in the control circuit end to end.
If 2 Ω or greater, repair the open/high resistance in the circuit.
If less than 2 Ω, replace the K33 HVAC control module.

If the voltage stays greater than 11 volts while commanding ON and OFF

8.1. Vehicle OFF, disconnect the harness connector at the K33 HVAC control module, vehicle ON.
8.2. Test for less than 1 V between the control circuit and ground.
If 1 V or greater, repair the short to voltage on the circuit.
If less than 1 V, replace the K33 HVAC control module.

If the voltage is 0 volts OFF and 12 volts ON while commanding ON and OFF

9. Verify the scan tool Auxiliary Coolant Pump Speed Feedback Frequency parameter is less than 10%.

If greater than 10%

9.1. Vehicle OFF, disconnect the harness connector at the K33 HVAC control module.
9.2. Test for infinite resistance between the signal circuit terminal 2 and ground.
If less than infinite resistance, repair the short to ground on the circuit.
If infinite resistance, replace the K33 HVAC control module.

If 10% or less

10. Install a 3 A fused jumper wire between the signal circuit terminal 2 and the low reference circuit terminal 4.
11. Verify the scan tool Auxiliary Coolant Pump Speed Feedback Frequency parameter is greater than 90%.

If less than 90%

11.1. Vehicle OFF, disconnect the harness connector at the K33 HVAC control module, vehicle ON.
11.2. Test for less than 1 V between the signal circuit terminal 2 and ground.
If 1 V or greater, repair the short to voltage on the circuit.
If less than 1 V
11.3. Vehicle OFF
11.4. Test for less than 2 Ω in the signal circuit end to end.
If 2 Ω or greater, repair the open/high resistance in the circuit.
If less than 2 Ω, replace the K33 HVAC control module.

If 90% or greater

12. If all circuits test normal, test or replace the G36 auxiliary heater coolant pump.

Repair Instructions

Perform the Diagnostic Repair Verification after completing the diagnostic procedure.

- Heater Water Auxiliary Pump Replacement
- Control Module References for HVAC control module replacement, programming and setup

&#169© Copyright Chevrolet. All rights reserved

DTC B046A

Diagnostic Instructions

- Perform the Diagnostic System Check - Vehicle prior to using this diagnostic procedure.
- Review Strategy Based Diagnosis for an overview of the diagnostic approach.
- Diagnostic Procedure Instructions provides an overview of each diagnostic category.

DTC Descriptors

DTC B046A 02: Auxiliary Heater Coolant Pump Temperature Circuit Short to Ground

DTC B046A 05: Auxiliary Heater Coolant Pump Temperature Circuit Short to Battery or Open

Diagnostic Fault Information

Circuit	Short to Ground	Open/High Resistance	Short to Voltage	Signal Performance
Signal circuit	B046A 02	B046A 05	B046A 05	-
Low Reference	--	B0163 05, B0183 05, B018A 05, B046A 05, B048C 05, B048F 05	B0163 05, B0183 05, B018A 05, B046A 05, B048C 05, B048F 05	-

Circuit Description

The HVAC control module supplies the temperature sensor with a low reference circuit and 5 V signal circuit. The HVAC control module determines the voltage drop across the sensor, which is proportional to temperature. As the temperature increases, the sensor resistance decreases and the voltage signal decreases. As the temperature decreases, the sensor resistance increases and the voltage signal increases.

Conditions for Running the DTC

The ignition is turned ON.

Conditions for Setting the DTC

The HVAC control module detects the temperature sensor signal circuit is less than -38°F or more than 185°F for more than 15 seconds.

Action Taken When the DTC Sets

A default value is used when the DTC is set.

Conditions for Clearing the DTC

- The DTC will become history if the HVAC control module no longer detects a failure.
- The history DTC will clear after 100 fault-free ignition cycles.

Reference Information

Schematic Reference

HVAC Schematics

Connector End View Reference

Component Connector End Views

Description and Operation

Automatic HVAC Description and Operation

Electrical Information Reference

- Circuit Testing
- Connector Repairs
- Testing for Intermittent Conditions and Poor Connections
- Wiring Repairs

Scan Tool Reference

Control Module References for scan tool information

Circuit/System Testing

1. Vehicle OFF and all vehicle systems OFF, disconnect the harness connector at the B135 coolant heater temperature sensor. It may take up to 2 minutes for all vehicle systems to power down.
2. Test for less than 10 Ω between the low reference circuit terminal 2 and ground.

   If 10 Ω or greater

   2.1. Vehicle OFF, disconnect the harness connector at the K33 HVAC control module.
   2.2. Test for less than 2 Ω in the low reference circuit end to end.
   If 2 Ω or greater, repair the open/high resistance in the circuit.
   If less than 2 Ω, replace the K33 HVAC control module.

   If less than 10 Ω
3. Vehicle in Service Mode.
4. Verify the scan tool Heater Core Coolant Temperature Sensor parameter is less than -35°F.

   If -35°F or greater

   4.1. Vehicle OFF, disconnect the harness connector at the K33 HVAC control module.
   4.2. Test for infinite resistance between the signal circuit terminal 1 and ground.
   If less than infinite resistance, repair the short to ground on the circuit.
   If infinite resistance, replace the K33 HVAC control module.

   If less than -35°F
5. Install a 3 A fused jumper wire between the signal circuit terminal 1 and the low reference circuit terminal 2.
6. Verify the scan tool Heater Core Coolant Temperature Sensor parameter is greater than 240°F.

   If 240°F or less

   6.1. Vehicle OFF, disconnect the harness connector at the K33 HVAC control module, vehicle in Service Mode.
   6.2. Test for less than 1 V between the signal circuit and ground.
   If 1 V or greater, repair the short to voltage on the circuit.
   If less than 1 V
   6.3. Vehicle OFF.
   6.4. Test for less than 2 Ω in the signal circuit end to end.
   If 2 Ω or greater, repair the open/high resistance in the circuit.
   If less than 2 Ω, replace the K33 HVAC control module.

   If greater than 240°F
7. Test or replace the B135 coolant heater temperature sensor.

Component Testing

1. Test the temperature sensor by varying the sensor temperature while monitoring the sensor resistance.
2. Compare the readings with the Temperature Versus Resistance and verify that the resistance is within 5 percent of the specification.
   If not within the specified range, replace the sensor.

Repair Instructions

Perform the Diagnostic Repair Verification after completing the diagnostic procedure.

- HVAC Component Replacement Reference
- Control Module References for HVAC control module replacement, programming and setup

&#169© Copyright Chevrolet. All rights reserved

DTC P0071-P0073

Diagnostic Instructions

- Perform the Diagnostic System Check - Vehicle prior to using this diagnostic procedure.
- Review Strategy Based Diagnosis for an overview of the diagnostic approach.
- Diagnostic Procedure Instructions provides an overview of each diagnostic category.

DTC Descriptors

DTC P0071: Ambient Air Temperature Sensor Performance

DTC P0072: Ambient Air Temperature Sensor Circuit Low Voltage

DTC P0073: Ambient Air Temperature Sensor Circuit High Voltage

Diagnostic Fault Information

Circuit	Short to Ground	Open/High Resistance	Short to Voltage	Signal Performance
Signal circuit	P0072	P0072	P0073	P0071
Low Reference	--	P0073	P0073	P0071

Circuit/System Description

The Hybrid/EV Powertrain Control Module 2 supplies the ambient air temperature sensor with a low reference circuit and 5 V signal circuit. The Hybrid/EV Powertrain Control Module 2 determines the voltage drop across the sensor, which is proportional to temperature. As the air temperature increases, the sensor resistance decreases. As the air temperature decreases, the sensor resistance increases.

Conditions for Running the DTC

Vehicle in Service Mode.

Conditions for Setting the DTC

The Hybrid/EV Powertrain Control Module 2 detects the ambient air temperature sensor signal circuit is less than -35°C (-39°F) or more than 85°C (185°F) for more than 15 seconds.

Action Taken When the DTC Sets

- The DIC will display SERVICE A/C SYSTEM.
- The system operates using a default value.

Conditions for Clearing the DTC

- The DTC will become history if the Hybrid/EV Powertrain Control Module 2 no longer detects the condition that set the DTC.
- The history DTC will clear after 100 fault-free ignition cycles.

Reference Information

Schematic Reference

HVAC Schematics

Connector End View Reference

Component Connector End Views

Description and Operation

Automatic HVAC Description and Operation

Electrical Information Reference

- Circuit Testing
- Connector Repairs
- Testing for Intermittent Conditions and Poor Connections
- Wiring Repairs

Scan Tool Reference

Control Module References for scan tool information

Circuit/System Testing

1. Vehicle OFF and all vehicle systems OFF, disconnect the harness connector at the B23 ambient air temperature sensor. It may take up to 2 minutes for all vehicle systems to power down.
2. Test for less than 10 Ω between the low reference circuit terminal B and ground.
   If 10 Ω or greater
   2.1. Vehicle OFF, disconnect the harness connector at the K114A Hybrid/EV powertrain control module 2.
   2.2. Test for less than 2 Ω in the low reference circuit end to end.
   If 2 Ω or greater, repair the open/high resistance in the circuit.
   If less than 2 Ω, replace the K114A Hybrid/EV powertrain control module 2.

   If less than 10 Ω
3. Vehicle in Service Mode.
4. Verify the scan tool Ambient Air Temperature Sensor parameter is less than -35°F.
   If -35°F or greater
   4.1. Vehicle OFF, disconnect the harness connector at the K114A Hybrid/EV powertrain control module 2.
   4.2. Test for infinite resistance between the signal circuit terminal A and ground.
   If less than infinite resistance, repair the short to ground on the circuit.
   If infinite resistance, replace the K114A Hybrid/EV powertrain control module 2.

   If less than -35°F
5. Install a 3 A fused jumper wire between the signal circuit terminal A and the low reference circuit terminal B.
6. Verify the scan tool Ambient Air Temperature Sensor parameter is greater than 240°F.
   If 240°F or less
   6.1. Vehicle OFF, disconnect the harness connector at the K114A Hybrid/EV powertrain control module 2, vehicle in Service Mode.
   6.2. Test for less than 1 V between the signal circuit and ground.
   If 1 V or greater, repair the short to voltage on the circuit.
   If less than 1 V
   6.3. Vehicle OFF
   6.4. Test for less than 2 Ω in the signal circuit end to end.
   If 2 Ω or greater, repair the open/high resistance in the circuit.
   If less than 2 Ω, replace the K114A Hybrid/EV powertrain control module 2.

   If greater than 240°F
7. Test or replace the B23 ambient air temperature sensor.

Repair Instructions

Perform the Diagnostic Repair Verification after completing the diagnostic procedure.

- Ambient Air Temperature Sensor Replacement
- Control Module References for Hybrid/EV Powertrain Control Module 2 replacement, programming and setup

&#169© Copyright Chevrolet. All rights reserved

DTC P0531, P0532, or P0533

Diagnostic Instructions

- Perform the Diagnostic System Check - Vehicle prior to using this diagnostic procedure.
- Review Strategy Based Diagnosis for an overview of the diagnostic approach.
- Diagnostic Procedure Instructions provides an overview of the diagnostic category.

DTC Descriptors

DTC P0531: Air Conditioning (A/C) Refrigerant Pressure Sensor Circuit

DTC P0532: Air Conditioning (A/C) Refrigerant Pressure Sensor Circuit Low Voltage

DTC P0533: Air Conditioning (A/C) Refrigerant Pressure Sensor Circuit High Voltage

Diagnostic Fault Information

Circuit	Short to Ground	Open/High Resistance	Short to Voltage	Signal Performance
5 V Reference	P0531 00P0532 00	P0531 00P0532 00	--	--
Signal	P0531 00 P0532 00	P0531 00 P0532 00	P0531 00 P0533 00	-
Low Reference	--	P0531 00 P0532 00	--	--

Circuit/System Description

The engine control module (ECM) monitors the high side refrigerant pressure through the A/C refrigerant pressure sensor. The ECM supplies a 5 V reference and a low reference to the sensor. Changes in the A/C refrigerant pressure cause the sensor signal to the ECM to vary. When the pressure is high, the signal voltage is high. When the pressure is low, the signal voltage is low. When pressure is high, the ECM commands the cooling fans on.

Conditions for Running the DTC

- Engine is running.

- Any of the conditions for setting the DTC are met for 15 seconds.
- Battery voltage is between 11-18 V.

Conditions for Setting the DTC

- The ECM detects that the A/C pressure is less than 1 psi (0.01 V).
- The ECM detects that the A/C pressure is more than 428 psi (4.92 V).

Action Taken When the DTC Sets

This is a type D DTC.

Conditions for Clearing the DTC

This is a type D DTC.

Diagnostic Aids

A malfunction within the refrigerant system causing high pressure can cause this DTC to set.

Reference Information

Schematic Reference

HVAC Schematics

Connector End View Reference

Component Connector End Views

Description and Operation

Automatic HVAC Description and Operation

Electrical Information Reference

- Circuit Testing
- Connector Repairs
- Testing for Intermittent Conditions and Poor Connections

- Wiring Repairs

DTC Type Reference

Powertrain Diagnostic Trouble Code (DTC) Type Definitions

Scan Tool Reference

Control Module References for scan tool information

Circuit/System Verification

Vehicle in Service Mode, observe the scan tool A/C High Side Pressure Sensor parameter in the ECM data list. The reading should be between 6.8 kPa (1 psi) and 2950 kPa (428 psi).

Circuit/System Testing

1. Vehicle OFF and all vehicle systems OFF, disconnect the harness connector at the B1 A/C refrigerant pressure sensor. It may take up to 2 minutes for all vehicle systems to power down.
2. Test for less than 10 Ω between the low reference circuit terminal 1 and ground.
   If 10 Ω or greater
   2.1. Vehicle OFF, disconnect the harness connector at the K20 ECM.
   2.2. Test for less than 2 Ω in the low reference circuit end to end.
   If 2 Ω or greater, repair the open/high resistance in the circuit.
   If less than 2 Ω, replace the K20 ECM.

   If less than 10 Ω
3. Vehicle in Service Mode.
4. Test for 4.8-5.2 V between the 5 V reference circuit terminal 2 and ground.
   If less than 4.8 V
   4.1. Vehicle OFF, disconnect the harness connector at the K20 ECM control module.
   4.2. Test for infinite resistance between the 5 V reference circuit and ground.
   If less than infinite resistance, repair the short to ground on the circuit.
   If infinite resistance
   4.3. Test for less than 2 Ω in the 5 V reference circuit end to end.
   If 2 Ω or greater, repair the open/high resistance in the circuit.
   If less than 2 Ω, replace the K20 ECM.

   If greater than 5.2 V
   4.1. Vehicle OFF, disconnect the harness connector at the K20 ECM control module, vehicle in Service Mode.

4.2. Test for less than 1 V between the 5 V reference circuit and ground.
If 1 V or greater, repair the short to voltage on the circuit.
If less than 1 V, replace the K20 ECM.

If between 4.8-5.2 V

5. Verify the scan tool A/C High Side Presure Sensor parameter is less than 4.8-5.2 V.

If 4.8-5.2 V or greater

5.1. Vehicle OFF, disconnect the harness connector at the K20 ECM, vehicle in Service Mode.
5.2. Test for less than 1 V between the signal circuit terminal 3 and ground.
If 1 V or greater, repair the short to voltage on the circuit.
If less than 1 V, replace the K20 ECM.

If less than 4.8-5.2 V

6. Install a 3 A fused jumper wire between the signal circuit terminal 3 and the 5 V reference circuit terminal 2.
7. Verify the scan tool A/C High Side Pressure Sensor parameter is greater than.02 V.

If.02 V or less

7.1. Vehicle OFF, disconnect the harness connector at the K20 ECM.
7.2. Test for infinite resistance between the signal circuit terminal 3 and ground.
If less than infinite resistance, repair the short to ground on the circuit.
If infinite resistance
7.3. Test for less than 2 Ω in the signal circuit end to end.
If 2 Ω or greater, repair the open/high resistance in the circuit.
If less than 2 Ω, replace the K20 ECM.

If greater than.02 V

8. Test or replace the B1 A/C refrigerant pressure sensor.

Repair Instructions

Perform the Diagnostic Repair Verification after completing the diagnostic procedure.

- HVAC Component Replacement Reference
- Control Module References for ECM replacement, programming and setup

&#169© Copyright Chevrolet. All rights reserved

DTC P0534

Diagnostic Instructions

- Perform the Diagnostic System Check - Vehicle prior to using this diagnostic procedure.
- Review Strategy Based Diagnosis for an overview of the diagnostic approach.
- Diagnostic Procedure Instructions provides an overview of each diagnostic category.

DTC Descriptor

DTC P0534: Air Conditioning (A/C) Refrigerant Charge Low

Circuit/System Description

The AC compressor function is to provide refrigerant flow in the AC refrigerant loop to help cool down and dehumidify the for the cabin and help maintain the battery temperature. Rather than a more typical pulley, the A/C compressor uses a 3-phase alternating current, high voltage electric motor to operate. It has an on-board inverter that takes High Voltage direct current from the vehicle's High Voltage Battery and inverts it to alternating current for the motor. The AC compressor shall be activated when any of the three following events occur:

- The customer selects ECO or Comfort.
- The HVAC system is fan only but the customer selects defrost mode
- The High Voltage Battery Thermal System requests the AC compressor on to help maintain the battery temperature

The Hybrid Powertrain control module 2 (HPCM2) uses values from the A/C refrigerant pressure transducers, A/C refrigerant thermistor, ambient air temperature sensor, cabin climate control request, battery cell temperature sensors, battery coolant temperature sensors and battery coolant pumps to determine the speed at which the compressor will operate. This message is sent from the HPCM2 to the A/C compressor control module via serial data message.

Conditions for Running the DTC

DTC P0534 Case 1

- 12V battery system voltage is equal to or greater than 10.25V

- The air conditioning compressor control module has 300V
- The A/C compressor motor is running for at least 30 seconds.
- Must be in battery active cooling mode for at least 1 minute
- The following DTCs must not be set: P0CE0; P0CE2; P0CE3; P0CE6; P0CE7; P1CE7; P1CE8, P0C47; P0C4A, P1F18, P0C44, P0C45, P0C43,P0CD6, p0CD7, P0CD8, P0071; P0072; P0073

DTC P0534 Case 2

- 12V battery system voltage is equal to or greater than 10.25V
- AC compressor off for greater than 240 seconds
- Outside air temperature greater than 15C. (59F)
- The following DTCs must not be set: P2516, P2517, P2518, P0606, P0071,P0072, P0073

DTC P0534 Case 3

- 12V battery system voltage is equal to or greater than 10.25V
- AC compressor on for greater than 240 seconds
- Outside air temperature greater than 5C (41F).
- The following DTCs must not be set: P2516, P2517, P2518, P0606, P0071,P0072, P0073

DTC P0534 Case 4

- 12V battery system voltage is equal to or greater than 10.25V
- A/C compressor off for greater than 240 seconds
- The following DTCs must not be set: P0531,P0532, P0533,P0606, P0071; P0072; P0073

Conditions for Setting the DTC

DTC P0534 Case 1

The difference between the hybrid/EV battery pack coolant outlet temperature and hybrid/EV battery pack coolant inlet temperature within the evaluation period of 120 seconds is less than a calibrated amount of 3 to 5 degrees. The required temperature difference requirement is based on outside air temperature and whether the cabin blower is on or off.

DTC P0534 Case 2

Low side pressure is a less than a designated value based on outside air temperature.

DTC P0534 Case 3

Low side pressure is less than 150 kPa (21.75 PSI) for outside air temperature greater than 5C (41F).

DTC P0534 Case 4

High side pressure is greater than 5000 kPa (725 PSI)

Action Taken When the DTC Sets

The A/C compressor control module is disabled.

Conditions for Clearing the DTC

P0534 is a type B DTC.

Reference Information

Schematic Reference

HVAC Schematics

Connector End View Reference

Component Connector End Views

Description and Operation

Automatic HVAC Description and Operation

Electrical Information Reference

- Circuit Testing
- Connector Repairs
- Testing for Intermittent Conditions and Poor Connections
- Wiring Repairs

DTC Type Reference

Powertrain Diagnostic Trouble Code (DTC) Type Definitions

Scan Tool Reference

Control Module References for scan tool information

Diagnostic Aids

P1EC3 is the hybrid/EV battery pack heater circuit fault DTC. It diagnoses three different circuit faults (short-ground, short-battery, open circuit); one of these, short to ground, could cause the hybrid/EV battery pack heater to activate and could cause P0534 to set. Diagnose P1EC3 before diagnosing P0534.

Circuit/System Verification

1. Verify that DTC P1EC3 is not set.
   If the DTC is set, Refer to Diagnostic Trouble Code (DTC) List - Vehicle .
2. Verify that DTC P0534 is not set.
   If the DTC is set, Refer to Air Conditioning (A/C) System Performance Test .

Repair Instructions

Perform the Diagnostic Repair Verification after completing the diagnostic procedure.

&#169© Copyright Chevrolet. All rights reserved

DTC P0536-P0538 or P153B

Diagnostic Instructions

- Perform the Diagnostic System Check - Vehicle prior to using this diagnostic procedure.
- Review Strategy Based Diagnosis for an overview of the diagnostic approach.
- Diagnostic Procedure Instructions provides an overview of each diagnostic category.

DTC Descriptors

DTC P0536: Air Conditioning (A/C) Evaporator Temperature Sensor 2 Performance

DTC P0537: Air Conditioning (A/C) Evaporator Temperature Sensor 2 Circuit Low Voltage

DTC P0538: Air Conditioning (A/C) Evaporator Temperature Sensor 2 Circuit High Voltage

DTC P153B: Air Conditioning (A/C) Evaporator Temperature Sensor 2 Not Plausible

Diagnostic Fault Information

Circuit	Short to Ground	Open/High Resistance	Short to Voltage	Signal Performance
Signal	P0537	P0537	P0538	P0536
Low Reference	--	P0537	--	--

Circuit Description

The A/C refrigerant low side temperature sensor measures the temperature on the low pressure side of the A/C Compressor.

The Hybrid Powertrain control module (HPCM2) supplies the A/C evaporator temperature sensor with a low reference circuit and 5-volt signal circuit. The HPCM2 determines the voltage drop across the sensor, which is proportional to temperature. As the temperature increases, the sensor resistance decreases and the voltage signal decreases. As the temperature decreases, the sensor resistance increases and the voltage signal increases.

Conditions for Running the DTC

- DTC P153B makes comparisons between other temperature sensors to determine if the A/C refrigerant low side temperature sensor reading is close to other temperature readings after a soak period. P153B is intended to run after a long ambient soak period, such as being parked overnight, when a hot engine condition has cooled, etc.
- DTCs P0537 and P0538 monitor A/C refrigerant low side temperature sensor for out of range conditions.
- DTC P0536 looks for the A/C refrigerant low side temperature sensor to go down in temperature when the compressor is operated with a cold engine and after the compressor has been off for one hour.

P1536

- 12 V battery system voltage above 10.25 V
- Hybrid Powertrain Control Module 2 is awake and communicating.
- None of these DTCs may be active: P0537; P0538, P0073; P0072; P0071, P0119; P0118; P0117; P0116, P0606.
- Engine coolant temperature must be within 15 degrees of outside air temperature.
- AC compressor must have been off for an hour since the last time the AC compressor was on.
- AC compressor must be turned on for one minute.

P1537 or P0538

- 12 V battery system voltage above 10.25 V
- Hybrid Powertrain Control Module 2 is awake and communicating.

P153B

- HPCM2 is awake and communicating.
- None of these DTCs may be active: P0537;P0538, P0073; P0072; P0071, P0119; P0118; P0117; P0116, P0531, P0532; P0533, P0606
- Outside air temperature raw and corrected values must have had a chance to settle out. Once this occurs these variables are assigned a status of valid. May need to have some time driving in EV mode
- Engine coolant temperature must be within 15 degrees of outside air temperature (i.e., cool engine)
- Outside air temperature must be between 32°F and 131°F.
- AC compressor must have been off for an hour since the last time the AC compressor was on.

Conditions for Setting the DTC

P0536

The difference between the A/C refrigerant low side temperature sensor before compressor on and after compressor on changes less than 2 degrees over a 30 second period.

P0537

The HPCM2 detects the A/C refrigerant low side temperature sensor signal circuit is less than -38°F for more than 15 seconds.

P0538

The HPCM2 detects the A/C refrigerant low side temperature sensor signal circuit is more than 185°F for more than 4 seconds.

P153B

- The difference between the A/C refrigerant low side temperature sensor and the outside air temperature value is greater than 10°C and
- The difference between the A/C refrigerant low side temperature sensor and the temperature calculated from the current high Side Refrigerant Pressure Sensor reading is greater than 10 degrees.

Action Taken When the DTC Sets

These are type B DTCs.

Conditions for Clearing the DTC

These are type B DTCs.

Reference Information

Schematic Reference

HVAC Schematics

Connector End View Reference

Component Connector End Views

Description and Operation

- Automatic HVAC Description and Operation
- Heating and Air Conditioning System Description and Operation

Electrical Information Reference

- Circuit Testing
- Connector Repairs
- Testing for Intermittent Conditions and Poor Connections
- Wiring Repairs

DTC Type Reference

Powertrain Diagnostic Trouble Code (DTC) Type Definitions

Scan Tool Reference

Control Module References for scan tool information

Circuit/System Testing

1. Vehicle OFF and all vehicle systems OFF, disconnect the harness connector at the B222 A/C refrigerant low side temperature sensor. It may take up to 2 minutes for all vehicle systems to power down.
2. Test for less than 10 Ω between the low reference circuit terminal B and ground.
   If 10 Ω or greater
   2.1. Vehicle OFF, disconnect the harness connector at the K114B HPCM2.
   2.2. Test for less than 2 Ω in the low reference circuit end to end.
   If 2 Ω or greater, repair the open/high resistance in the circuit.
   If less than 2 Ω, replace the K114B HPCM2.
   If less than 10 Ω
3. Vehicle in Service Mode.
4. Verify the scan tool parameter A/C evaporator Temperature sensor is less than -35°F.
   If -35°F or greater
   4.1. Vehicle OFF, disconnect the harness connector at the K114B HPCM2.
   4.2. Test for infinite resistance between the signal circuit terminal A and ground.
   If less than infinite resistance, repair the short to ground on the circuit.
   If infinite resistance, replace the K114B HPCM2.
   If less than -35°F
5. Install a 3 A fused jumper wire between the signal circuit terminal B and the low reference circuit terminal A.
6. Verify the scan tool parameter A/C evaporator Temperature sensor is greater than 240°F.
   If 240°F or less
   6.1. Vehicle OFF, disconnect the harness connector at the K114B HPCM2, vehicle in Service Mode.
   6.2. Test for less than 1 V between the signal circuit and ground.
   If 1 V or greater, repair the short to voltage on the circuit.

If less than 1 V

6.3. Vehicle OFF

6.4. Test for less than 2 Ω in the signal circuit end to end.

If 2 Ω or greater, repair the open/high resistance in the circuit.

If less than 2 Ω, replace the K114B HPCM2..

If greater than 240°F

7. Test or replace the B222 A/C refrigerant low side temperature sensor.

Component Testing

1. Test the A/C refrigerant low side temperature sensor by varying the sensor temperature while monitoring the sensor resistance.
2. Compare the readings with the Sensor Resistance Table and verify that the resistance is within 5 percent of the specification.
   If not within the specified range, replace the sensor.

Repair Instructions

Perform the Diagnostic Repair Verification after completing the diagnostic procedure.

- HVAC Component Replacement Reference
- Control Module References for HPCM2 control module replacement, programming and setup

&#169© Copyright Chevrolet. All rights reserved

DTC P0D69-P0D7F

Diagnostic Instructions

- Perform the Diagnostic System Check - Vehicle prior to using this diagnostic procedure.
- Review Strategy Based Diagnosis for an overview of the diagnostic approach.
- Diagnostic Procedure Instructions provides an overview of each diagnostic category.

DTC Descriptors

DTC P0D69: A/C Compressor Motor Voltage Sensor Performance

DTC P0D6A: A/C Compressor Motor Voltage Sensor Circuit High Voltage

DTC P0D6B: A/C Compressor Motor Voltage Sensor Circuit Low Voltage

DTC P0D6F: A/C Compressor Motor High Current

DTC P0D71: Electric A/C Compressor Control Module Temperature Sensor Performance

DTC P0D72: Electric A/C Compressor Control Module Temperature Sensor Circuit High Voltage

DTC P0D73: Electric A/C Compressor Control Module Temperature Sensor Circuit Low Voltage

DTC P0D76: Electric A/C Compressor Control Module Output Driver Temperature Sensor Performance

DTC P0D77: Electric A/C Compressor Control Module Output Driver Temperature Sensor Circuit High Voltage

DTC P0D78: Electric A/C Compressor Control Module Output Driver Temperature Sensor Circuit Low Voltage

DTC P0D7A: A/C Compressor Motor Phase U Low Current

DTC P0D7B: A/C Compressor Motor Phase U High Current

DTC P0D7C: A/C Compressor Motor Phase V Low Current

DTC P0D7D: A/C Compressor Motor Phase V High Current

DTC P0D7E: A/C Compressor Motor Phase W Low Current

DTC P0D7F: A/C Compressor Motor Phase W High Current

Circuit/System Description

The AC compressor function is to provide refrigerant flow in the AC refrigerant loop to help cool down the cabin, help dehumidify the air in a defrost mode and help maintain the battery temperature. Rather than a more typical pulley, the A/C compressor uses a 3-phase alternating current, high voltage electric motor to operate. It has an on-board inverter that takes High Voltage direct current from the vehicle's High Voltage Battery and inverts it to alternating current for the motor. The AC compressor shall be activated when any of the three following events occur:

- The customer pushes the AC button
- The HVAC control, in AUTO mode, requests the electric AC compressor on to help in cooling the cabin or removing moisture in the defrost mode
- The High Voltage Battery Thermal System requests the AC compressor on to help maintain the battery temperature

The Hybrid Powertrain control module 2 uses values from the A/C refrigerant pressure transducers, A/C refrigerant thermistor, duct temperature sensors, ambient air temperature sensor, passenger compartment temperature sensor, evaporator temperature sensor, battery cell temperature sensors, battery coolant temperature sensors and battery coolant pumps to determine the speed at which the compressor will operate. This speed request message is sent from the Hybrid/EV Powertrain Control Module 2 to the A/C compressor control module via serial data message.

Conditions for Running the DTC

Certain performance DTCs in this group, P0D69, P0D71, P076, are intended to run after a long ambient soak period, such as being parked overnight, when a hot engine condition has cooled, etc.

DTC P0D69

- 12 V battery system voltage is above 10.25 V.
- A/C compressor control module is awake.
- Main HV battery contactors must be closed.
- DTCs P0D6A; P0D6B, P0ABC, P0ABD, P0ABB, P0AF8, P1A07, U1111, U185A, P0AE4, P0AD9, P0AA1, P0ADD, P1EBC, P0AE2 must not be set.

DTC P0D6A

- 12 V battery system voltage is above 10.25 V.

- A/C compressor control module is awake.
- Difference between the A/C compressor control module high voltage levels and the high voltage Battery Pack Side Voltage is less than 15 V.
- There are no battery pack voltage DTCs set.
- Battery Pack Voltage Sensors are valid.

DTC P0D6B

- 12 V battery system voltage is above 10.25 V.
- A/C compressor control module is awake.
- Difference between the A/C compressor control module high voltage levels and the high voltage Battery Pack Side Voltage exceeds 15 V.
- Battery Pack Voltage Sensors are valid.
- There are no battery pack voltage DTCs set.
- Main HV Contactors are Closed
- No main HV contactor faults are active

DTC P0D6F

- 12 V battery system voltage is above 10.25 V.
- A/C compressor control module is awake.
- Compressor Speed Request is greater than 0 RPM

DTC P0D71

- 12 V battery system voltage is above 10.25 V.
- Vehicle is in Run Mode or Charging Mode
- Compressor has been off for > 6 hours
- Outside air temperature is greater than -7°C
- Engine coolant temperature is within 15° of outside air temperature
- DTCs P0D77, P0D78, P0606 P0073; P0072; P0071, P0113, P0112, P0111, P0114, P0119; P0118; P0117; P0116, P0D72; P0D73 must not be set

DTC P0D72

- 12 V battery system voltage is above 10.25 V.
- A/C compressor control module is awake.
- Outside Air temperature is greater than -7°C (19°F)
- Following DTCs are not set: CPU temp sensor, output driver temp sensor, outside air temperature sensor, engine coolant temperature sensor.

DTC P0D73

- 12 V battery system voltage is above 10.25 V.
- A/C compressor control module is awake.

DTC P0D76

- 12 V battery system voltage is above 10.25 V.
- A/C compressor control module is awake.
- Outside Air temperature is greater than -7°C (19°F)
- Engine coolant temperature is within 15° of outside air temperature
- Compressor has been off for > 6 hours
- Following DTCs are not set: P0D77; P0D78, P0606, P0073; P0072; P0071, P0073; P0072; P0071, P0113, P0112, P0111, P0114, P0119; P0118; P0117; P0116

DTC P0D77

- 12 V battery system voltage is above 10.25 V.
- A/C compressor control module is awake.
- Outside Air temperature is greater than -7°C (19°F)
- Compressor Speed Request is greater than 0 RPM

DTC P0D78

- 12 V battery system voltage is above 10.25 V.
- A/C compressor control module is awake.

DTC P0D7A

- 12 V battery system voltage is above 10.25 V.
- A/C compressor control module is awake.
- Compressor Speed Request is 0 RPM

DTC P0D7B

- 12 V battery system voltage is above 10.25 V.
- A/C compressor control module is awake.
- Compressor Speed Request is 0 RPM

DTC P0D7C

- 12 V battery system voltage is above 10.25 V.
- A/C compressor control module is awake.
- Compressor Speed Request is 0 RPM

DTC P0D7D

- 12 V battery system voltage is above 10.25 V.
- A/C compressor control module is awake.
- Compressor Speed Request is 0 RPM

DTC P0D7E

- 12 V battery system voltage is above 10.25 V.
- A/C compressor control module is awake.
- Compressor Speed Request is 0 RPM

DTC P0D7F

- 12 V battery system voltage is above 10.25 V.
- A/C compressor control module is awake.
- Compressor Speed Request is 0 RPM

Conditions for Setting the DTC

DTC P0D69

A/C compressor control module high voltage input voltage is not within 10 V of high voltage battery voltage

DTC P0D6A

A/C compressor control module input voltage is greater than 450 V for 6 seconds

DTC P0D6B

A/C compressor control module input voltage is less than 190 V for 6 seconds

DTC P0D6F

A/C compressor control module DC current draw is greater than 27 A for more than 6 seconds.

DTC P0D71

Compressor temperature sensor is not within 10 of intake air temperature sensor and compressor temperature sensor is not within 10° of compressor output driver temperature sensor.

DTC P0D72

less than -40°C (-40°F) for 6 seconds.

DTC P0D73

greater than 135°C (276.6°F) for 6 seconds.

DTC P0D76

Compressor output driver temperature sensor is not within 7° of intake air temperature sensor and compressor output driver temperature sensor is not within 11° of outside air temperature.

DTC P0D77

Air conditioning compressor module output driver temperature sensor is less than -40°C (-40°F)

DTC P0D78

Air conditioning compressor module output driver temperature sensor is greater than 135°C (276.6°F)

DTC P0D7A

Air conditioning compressor motor current U-phase Input>= 68 A

DTC P0D7B

Air conditioning compressor motor current U-phase Input <= -68 A

DTC P0D7C

Air conditioning compressor motor current V-phase Input >= 68 A

DTC P0D7D

Air conditioning compressor motor current V-phase Input<=-68 A

DTC P0D7E

Air conditioning compressor motor current W-phase Input>= 68 A

DTC P0D7F

Air conditioning compressor motor current W-phase Input <= -68 A

Action Taken When the DTC Sets

The A/C compressor control module is disabled.

Conditions for Clearing the DTC

These are all type B DTCs

Reference Information

Schematic Reference

HVAC Schematics

Connector End View Reference

Component Connector End Views

Description and Operation

Automatic HVAC Description and Operation

Electrical Information Reference

- Circuit Testing
- Connector Repairs

- Testing for Intermittent Conditions and Poor Connections
- Wiring Repairs

DTC Type Reference

Powertrain Diagnostic Trouble Code (DTC) Type Definitions

Scan Tool Reference

Control Module References for scan tool information

Circuit/System Verification

Danger: Always perform the High Voltage Disabling procedure prior to servicing any High Voltage component or connection. Personal Protection Equipment (PPE) and proper procedures must be followed.

The High Voltage Disabling procedure will perform the following tasks:

- Identify how to disable high voltage.
- Identify how to test for the presence of high voltage.
- Identify conditions under which high voltage is always present and personal protection equipment (PPE) and proper procedures must be followed.

Before working on any high voltage system, be sure to wear the following Personal Protection Equipment:

- Safety glasses with appropriate side shields when within 15 metres (50 feet) of the vehicle, either indoors or outdoors.
- Certified and up-to-date Class "0" Insulation gloves rated at 1000V with leather protectors.
  - Visually and functionally inspect the gloves before use.
  - Wear the Insulation gloves with leather protectors at all times when working with the high voltage battery assembly, whether the system is energised or not.

Failure to follow the procedures exactly as written may result in serious injury or death.

1. Verify that DTC P0D69-P0D7F is not set.
   If the DTC is set, verify that the A/C compressor control module and the Hybrid/EV powertrain control module 2 have the latest software and reprogramme the modules if needed.
2. Operate the vehicle within the conditions for running the DTC. If the DTC resets, replace the G1 A/C compressor. Refer to High Voltage Disabling .

Repair Instructions

Perform the Diagnostic Repair Verification after completing the diagnostic procedure.

- HVAC Component Replacement Reference

- Control Module References for control module replacement, programming and setup

&#169© Copyright Chevrolet. All rights reserved

DTC P151C or P2516-P2518

Diagnostic Instructions

- Perform the Diagnostic System Check - Vehicle prior to using this diagnostic procedure.
- Review Strategy Based Diagnosis for an overview of the diagnostic approach.
- Diagnostic Procedure Instructions provides an overview of each diagnostic category.

DTC Descriptors

DTC P151C: Air Conditioning (A/C) Low Side Refrigerant Pressure Sensor Not Plausible

DTC P2516: Air Conditioning (A/C) Low Side Refrigerant Pressure Sensor Performance

DTC P2517: Air Conditioning (A/C) Low Side Refrigerant Pressure Sensor Circuit Low Voltage

DTC P2518: Air Conditioning (A/C) Low Side Refrigerant Pressure Sensor Circuit High Voltage

Diagnostic Fault Information

Circuit	Short to Ground	Open/High Resistance	Short to Voltage	Signal Performance
5 V Reference	P2516 00 P2517 00	P2516 00 P2517 00	--	--
Signal	P2516 00 P2517 00	P2516 00 P2517 00	P2516 00 P2518 00	-
Low Reference	--	P2516 00 P2517 00	--	--

Circuit/System Description

The Hybrid Powertrain control module (HPCM2) monitors the low side refrigerant pressure through the A/C pressure sensor. The HPCM2 supplies a 5 V reference and a low reference to the sensor. Changes in the A/C refrigerant pressure cause the sensor signal to the HPCM2 to vary. When the pressure is high, the signal voltage is high. When the pressure is low, the signal voltage is low.

Conditions for Running the DTC

P151C

- 12 V battery system voltage above 10.25 V.
- HPCM2 is awake and communicating.
- None of these DTCs may be active: P2517, P2518, P0073; P0072; P0071, P0119; P0118; P0117; P0116, P0531, P0532; P0533, P537,P538, P153B, P0606
- Outside Air Temperature raw and corrected values must have had a chance to settle out. Once this occurs these variables are assigned a status of valid. May need to have some time driving in EV mode
- Engine coolant temperature must be within 15 degrees of outside air temperature
- Outside Air Temperature between 0°C (32°F) and 25°C (77°F).
- AC compressor must have been off for an hour since the last time the AC compressor was on.

P2516

- 12 V battery system voltage above 10.25 V.
- HPCM2 is awake and communicating.
- None of these DTCs may be active: P2517, P2518, P0073; P0072; P0071, P0119; P0118; P0117; P0116, P0606
- Engine coolant temperature must be within 15 degrees of outside air temperature
- AC compressor must have been off for an hour since the last time the AC compressor was on.
- AC compressor must be turned on for one minute. (This may the require the service technician to select an HVAC mode that causes the AC compressor to run).

P2517 or P2518

- 12 V battery system voltage above 10.25 V.
- HPCM2 is awake and communicating.

Conditions for Setting the DTC

DTC P151C

The A/C low side Refrigerant Pressure reading and the A/C high side Refrigerant Pressure reading must be within 200 kPa (29 psi). and the A/C low side Refrigerant Pressure reading and the pressure derived from the A/C Refrigerant Temperature Sensor must be within 200 kPa (29 psi)

DTC P2516

The difference between the A/C low side pressure Sensor before compressor on and after compressor on changes less than 50 kPa (7 psi) over a 15 second period.

DTC P2517

The HPCM2 detects a short to ground or open at the A/C low side pressure sensor signal circuit.

DTC P2518

The HPCM2 detects a short to voltage at the A/C low side pressure sensor signal circuit.

Action Taken When the DTC Sets

These are type B DTCs.

Conditions for Clearing the DTC

These are type B DTCs.

Reference Information

Schematic Reference

HVAC Schematics

Connector End View Reference

Component Connector End Views

Description and Operation

Automatic HVAC Description and Operation

Electrical Information Reference

- Circuit Testing
- Connector Repairs
- Testing for Intermittent Conditions and Poor Connections
- Wiring Repairs

DTC Type Reference

Powertrain Diagnostic Trouble Code (DTC) Type Definitions

Scan Tool Reference

Control Module References for scan tool information

Circuit/System Testing

1. Vehicle OFF and all vehicle systems OFF, disconnect the harness connector at the B1C A/C low side pressure sensor harness connector. It may take up to 2 minutes for all vehicle systems to power down.
2. Test for less than 10 Ω between the low reference circuit terminal 3 and ground.
   If 10 Ω or greater
   2.1. Vehicle OFF, disconnect the harness connector at the K114B HPCM2.
   2.2. Test for less than 2 Ω in the low reference circuit end to end.
   If 2 Ω or greater, repair the open/high resistance in the circuit.
   If less than 2 Ω, replace the K114B HPCM2.

   If less than 10 Ω
3. Vehicle in Service Mode.
4. Test for 4.8-5.2 V between the 5 V reference circuit terminal 2 and ground.
   If less than 4.8 V
   4.1. Vehicle OFF, disconnect the harness connector at the K114B HPCM2.
   4.2. Test for infinite resistance between the 5 V reference circuit and ground.
   If less than infinite resistance, repair the short to ground on the circuit.
   If infinite resistance
   4.3. Test for less than 2 Ω in the 5 V reference circuit end to end.
   If 2 Ω or greater, repair the open/high resistance in the circuit.
   If less than 2 Ω, replace the K114B HPCM2.

   If greater than 5.2 V
   4.1. Vehicle OFF, disconnect the harness connector at the K114B HPCM2, vehicle in Service Mode.
   4.2. Test for less than 1 V between the 5 V reference circuit and ground.
   If 1 V or greater, repair the short to voltage on the circuit.
   If less than 1 V, replace the K114B HPCM2.

   If between 4.8-5.2 V
5. Verify the scan tool A/C Low Side Pressure Sensor parameter is less than 4.8-5.2 V.
   If 4.8-5.2 V or greater
   5.1. Vehicle OFF, disconnect the harness connector at the K114B HPCM2, vehicle in Service Mode.
   5.2. Test for less than 1 V between the signal circuit terminal 3 and ground.
   If 1 V or greater, repair the short to voltage on the circuit.
   If less than 1 V, replace the K114B HPCM2.

If less than 4.8-5.2 V

6. Install a 3 A fused jumper wire between the signal circuit terminal 1 and the 5 V reference circuit terminal 2.
7. Verify the scan tool A/C Low Side Pressure Sensor parameter is greater than.02 V.

   If.02 V or less

   7.1. Vehicle OFF, disconnect the harness connector at the K114B HPCM2.

   7.2. Test for infinite resistance between the signal circuit terminal 1 and ground.

   If less than infinite resistance, repair the short to ground on the circuit.

   If infinite resistance

   7.3. Test for less than 2 Ω in the signal circuit end to end.

   If 2 Ω or greater, repair the open/high resistance in the circuit.

   If less than 2 Ω, replace the K114B HPCM2.

   If greater than.02 V

8. Test or replace the B1C A/C refrigerant pressure sensor.

Repair Instructions

Perform the Diagnostic Repair Verification after completing the diagnostic procedure.

- HVAC Component Replacement Reference
- Control Module References for control module replacement, programming and setup

&#169© Copyright Chevrolet. All rights reserved

DTC P1ECA or P1EC9

Diagnostic Instructions

- Perform the Diagnostic System Check - Vehicle prior to using this diagnostic procedure.
- Review Strategy Based Diagnosis for an overview of the diagnostic approach.
- Diagnostic Procedure Instructions provides an overview of each diagnostic category.

DTC Descriptors

DTC P1ECA: A/C Compressor Motor Instantaneous High Voltage

DTC P1EC9: A/C Compressor Motor Instantaneous High Current

Circuit/System Description

The AC compressor function is to provide refrigerant flow in the AC refrigerant loop to help cool down the cabin, help dehumidify the air in a defrost mode and help maintain the battery temperature. Rather than a more typical pulley, the A/C compressor uses a 3-phase alternating current, high voltage electric motor to operate. It has an on-board inverter that takes High Voltage direct current from the vehicle's High Voltage Battery and inverts it to alternating current for the motor. The AC compressor shall be activated when any of the three following events occur:

- The customer pushes the AC button
- The HVAC control, in AUTO mode, requests the electric AC compressor on to help in cooling the cabin or removing moisture in the defrost mode
- The High Voltage Battery Thermal System requests the AC compressor on to help maintain the battery temperature

The Hybrid/EV Powertrain Control Module 2 uses values from the A/C refrigerant pressure transducers, A/C refrigerant thermistor, duct temperature sensors, ambient air temperature sensor, passenger compartment temperature sensor, evaporator temperature sensor, battery cell temperature sensors, battery coolant temperature sensors and battery coolant pumps to determine the speed at which the compressor will operate. This speed request message is sent from the Hybrid/EV Powertrain Control Module 2 to the A/C compressor control module via GM LAN message.

Conditions for Running the DTC

DTC P1ECA

- System voltage is above 10.25 V.
- Vehicle is in Run Mode or Charging Mode

DTC P1EC9

- System voltage is above 10.25 V.
- Vehicle is in Run Mode or Charging Mode
- Compressor Speed Request is greater than 0 RPM

Conditions for Setting the DTC

DTC P1ECA

Sets when the high voltage to the module is greater than 480 V for 3 seconds

DTC P1EC9

Sets when DC Link is above threshold of 60 A for 3 seconds

Action Taken When the DTC Sets

The A/C compressor control module is disabled but will retry once the compressor speed request goes to 0 RPM and a new speed request greater than 0 RPM is sent.

Conditions for Clearing the DTC

The DTC can be cleared with the scan tool.

Reference Information

Schematic Reference

HVAC Schematics

Connector End View Reference

Component Connector End Views

Description and Operation

Automatic HVAC Description and Operation

Electrical Information Reference

- Circuit Testing
- Connector Repairs
- Testing for Intermittent Conditions and Poor Connections
- Wiring Repairs

DTC Type Reference

Powertrain Diagnostic Trouble Code (DTC) Type Definitions

Scan Tool Reference

Control Module References for scan tool information

Circuit/System Testing

1. Verify that DTC P1ECA or P1EC9 is not set.
   If the DTC is set, verify that the A/C compressor control module and the Hybrid/EV powertrain control module 2 have the latest software and reprogramme the modules if needed.
2. Operate the vehicle within the conditions for running the DTC.
   If the DTC is set, replace the G1 A/C compressor.

Repair Instructions

Perform the Diagnostic Repair Verification after completing the diagnostic procedure.

- HVAC Component Replacement Reference
- Control Module References for ECM replacement, programming and setup

&#169© Copyright Chevrolet. All rights reserved

DTC P1F0A-P1F0D

Diagnostic Instructions

- Perform the Diagnostic System Check - Vehicle prior to using this diagnostic procedure.
- Review Strategy Based Diagnosis for an overview of the diagnostic approach.
- Diagnostic Procedure Instructions provides an overview of each diagnostic category.

DTC Descriptors

DTC P1F0A: A/C Compressor Motor Speed Performance

DTC P1F0B: A/C Compressor Motor Start-Up Current Performance

DTC P1F0C: Electric A/C Compressor Control Module A/C Compressor Motor Current Feedback Circuit Low Voltage

DTC P10FD: Electric A/C Compressor Control Module A/C Compressor Motor Current Feedback Circuit High Voltage

Circuit/System Description

The AC compressor function is to provide refrigerant flow in the AC refrigerant loop to help cool down the cabin, help dehumidify the air in a defrost mode and help maintain the battery temperature. Rather than a more typical pulley, the A/C compressor uses a 3-phase alternating current, high voltage electric motor to operate. It has an on-board inverter that takes High Voltage direct current from the vehicle's High voltage battery and inverts it to alternating current for the motor. The AC compressor shall be activated when any of the three following events occur:

- The customer pushes the AC button
- The HVAC control, in AUTO mode, requests the electric AC compressor on to help in cooling the cabin or removing moisture in the defrost mode
- The High Voltage Battery Thermal System requests the AC compressor on to help maintain the battery temperature

The Hybrid/EV Powertrain Control Module 2 uses values from the A/C refrigerant pressure transducers, A/C refrigerant thermistor, duct temperature sensors, ambient air temperature sensor, passenger compartment temperature sensor, evaporator temperature sensor, battery cell temperature sensors, battery coolant temperature sensors and battery coolant pumps to determine the speed at which the compressor will operate. This message is sent from the Hybrid/EV Powertrain Control Module 2 to the A/C compressor control module via serial data message.

AC Compressor has a motor start up procedure that can take a variable length of time to run to bring the motor up to requested speed. Length of time is dependent on external conditions such as under-bonnet temperature and high side pressure. In hotter conditions, the motor start up time will be longer. The A/C compressor control module monitors an internal parameter known as the DC link current which is based off DC input current. It is not possible to measure this parameter externally.

Conditions for Running the DTC

DTC P1F0A

- 12 V battery system voltage is above 10.25 V.
- Vehicle is in Run Mode or Charging Mode
- Compressor is in start up mode

DTC P1F0B

- 12 V battery system voltage is above 10.25 V.
- Vehicle is in Run Mode or Charging Mode
- Compressor is in start up mode

DTC P1F0C

- 12 V battery system voltage is above 10.25 V.
- Vehicle is in Run Mode or Charging Mode
- Compressor is in start up mode

DTC P1F0D

- 12 V battery system voltage is above 10.25 V.
- Vehicle is in Run Mode or Charging Mode
- Compressor is in start up mode

Conditions for Setting the DTC

DTC P1F0A

- A/C compressor control module temperature is greater than 85°C (185°F) and compressor motor speed does not reach to 1800 RPM within 20 seconds after the start of spinning
- A/C compressor control module temperature is less than or equal to 85°C and A/C compressor motor speed does not reach 1800 RPM.

DTC P1F0B

Any A/C compressor control module phase current (U/V/W) >= -1A during initial motor startup process

DTC P1F0C

A/C compressor control module DC link Current is less than 2.5 A for 6 seconds

DTC P1F0D

A/C compressor control module DC link Current is greater than 36.7 A for 6 seconds

Action Taken When the DTC Sets

The A/C compressor control module is disabled but will retry once the compressor speed request goes to 0 RPM and a new speed request > 0 RPM is sent.

Conditions for Clearing the DTC

These are type B DTCs

Reference Information

Schematic Reference

HVAC Schematics

Connector End View Reference

Component Connector End Views

Description and Operation

Automatic HVAC Description and Operation

Electrical Information Reference

- Circuit Testing
- Connector Repairs
- Testing for Intermittent Conditions and Poor Connections

- Wiring Repairs

DTC Type Reference

Powertrain Diagnostic Trouble Code (DTC) Type Definitions

Scan Tool Reference

Control Module References for scan tool information

Circuit/System Verification

1. Verify that DTC P0F0A-P1F0D is not set.
   If the DTC is set, verify that the A/C compressor control module and the Hybrid/EV Powertrain Control Module 2 have the latest software and reprogramme the modules if needed
2. Operate the vehicle within the conditions for running the DTC.
   If the DTC is set, replace the G1 A/C compressor.

Repair Instructions

Perform the Diagnostic Repair Verification after completing the diagnostic procedure.

- HVAC Component Replacement Reference
- Control Module References for ECM replacement, programming and setup

&#169© Copyright Chevrolet. All rights reserved

DTC P2681, P26A3, P26A6, P26A7, or P26A9

Diagnostic Instructions

- Perform the Diagnostic System Check - Vehicle prior to using this diagnostic procedure.
- Review Strategy Based Diagnosis for an overview of the diagnostic approach.
- Diagnostic Procedure Instructions provides an overview of each diagnostic category.

DTC Descriptors

DTC P2681: Engine Coolant Bypass Valve Control Circuit

DTC P26A3: Engine Coolant Bypass Valve Performance

DTC P26A6: Engine Coolant Bypass Valve Position Sensor Circuit Low Voltage

DTC P26A7: Engine Coolant Bypass Valve Position Sensor Circuit High Voltage

DTC P26A9: Engine Coolant Bypass Valve Position Sensor Stop Performance

Circuit/System Description

The passenger compartment heater coolant control valve regulates the engine coolant flow into the cabin heater loop depending on engine coolant temperature and ambient temperature conditions. The passenger compartment heater coolant control valve has two positions: ByPass or Link. In the ByPass position, the coolant in the engine loop and heater loop are separated and in the link position the coolant circulates through both loops. The valve movement is controlled by a PWM signal. A 50% duty cycle is a normal duty cycle. A 75% duty cycle represents a valve commanded to the link position. A 25% duty cycle represents a valve commanded to the ByPass position. The passenger compartment heater coolant control valve uses an internal position sensor that sends a signal to the hybrid powertrain control module to determine the valve position.

When the engine coolant temperature heats up, a valve learn procedure takes place. The hybrid powertrain control module 2 commands the valve to the link position and records the voltage coming back from the position sensor. Then the hybrid powertrain control module 2 commands the valve back to the bypass position and records the voltage coming back from the position sensor. The voltage values in both the link and bypass positions must fall within calibrated ranges.

Conditions for Running the DTC

P2681, P26A6 and P26A7

12 V battery system voltage is greater than or equal to 10.25 V.

P26A3 and P26A9

- 12 V battery system voltage is greater than or equal to 10.25 V.
- The propulsion system is active.
- None of the following DTCs are set; P2681, P26A6, P26A7.

Conditions for Setting the DTC

P2681

The hybrid powertrain control module 2 has detected a short to voltage or an open on valve drive circuit.

P26A6

The hybrid powertrain control module 2 has detected a short to ground on feedback circuit. The feedback signal is less than 5% (0.25 V).

P26A7

The hybrid powertrain control module 2 has detected a short to voltage on feedback circuit. The feedback signal is greater than 95% (4.25 V).

P26A3

- The hybrid powertrain control module 2 has detected a stuck valve.
- The valve did not reach the commanded position within 15 seconds after 3 attempts to move the valve.
- The coolant temperature is above 50° C.

  OR
- The hybrid powertrain control module 2 has detected a stuck valve.
- The valve did not reach the commanded position within 15 seconds
- The coolant temperature is above 65° C.

P26A9

- The feedback signal is between 70% - 95% (3.5 V - 4.75 V) or between 5% - 30% (0.25 V-1.5 V)
  OR
- The hybrid powertrain control module 2 has detected the valve feedback has drifted beyond acceptable range.
  OR
- The hybrid powertrain control module 2 has detected the valve feedback to be erratic beyond acceptable range.

Action Taken When the DTC Sets

DTCs P2681, P26A3, P26A6, P26A7 and P26A9 are type B DTCs.

Conditions for Clearing the DTC

- DTCs P2681, P26A3, P26A6, P26A7 and P26A9 are type B DTCs.
- DTC P26A3 requires the ignition to cycle from ON to OFF.

Reference Information

Schematic Reference

HVAC Schematics

Connector End View Reference

Component Connector End Views

Description and Operation

Automatic HVAC Description and Operation

Electrical Information Reference

- Circuit Testing
- Connector Repairs
- Testing for Intermittent Conditions and Poor Connections
- Wiring Repairs

DTC Type Reference

Powertrain Diagnostic Trouble Code (DTC) Type Definitions

Scan Tool Reference

Control Module References for scan tool information

Circuit/System Verification

1. Verify that DTC P2518 is not set.
   If DTC P0606, P0CE7, P2518 and P26A7 are set, refer to DTC P151C or P2516-P2518
   If DTC P0606, P0CE7 and P26A7 are set, refer to DTC P0601-P0604, P0606, or P062F
2. With a scan tool, verify that the Passenger Compartment Heater Coolant Control Solenoid Valve Feedback is between 37%-62%.

Circuit/System Testing

1. Vehicle OFF and all vehicle systems OFF. Disconnect the harness connector at the Q66 Passenger Compartment Heater Coolant Control Valve. It may take up to 2 minutes for all vehicle systems to power down.
2. Test for less than 10 Ω between the ground circuit terminal 6 and ground.
   If 10 Ω or greater
   2.1. Vehicle OFF.
   2.2. Test for less than 2 Ω in the ground circuit end to end.
   If 2 Ω or greater, repair the open/high resistance in the circuit.
   If less than 2 Ω, repair the open/high resistance in the ground connection.
   If less than 10 Ω
3. Test for less than 10 Ω between the low reference circuit terminal 5 and ground.
   If 10 Ω or greater
   3.1. Disconnect the harness connector at the K114B HPCM2.
   3.2. Test for less than 2 Ω in the low reference circuit end to end.
   If 2 Ω or greater, repair the open/high resistance in the circuit.
   If less than 2 Ω, replace the K114B HPCM2.
   If less than 10 Ω
4. Verify a test lamp illuminates between the B+ circuit terminal 1 and ground.
   If the test lamp does not illuminate and the circuit fuse is good
   4.1. Vehicle OFF.
   4.2. Test for less than 2 Ω in the B+ circuit end to end.
   If 2 Ω or greater, repair the open/high resistance in the circuit.
   If less than 2 Ω, verify the fuse is not open and there is voltage at the fuse.
   If the test lamp does not illuminate and the circuit fuse is open

4.1. Vehicle OFF.
4.2. Test for infinite resistance between the B+ circuit and ground.
If less than infinite resistance, repair the short to ground on the circuit.
If infinite resistance, replace the X50A Underhood Fuse Block.

If the test lamp illuminates

5. Vehicle ON.
6. Test for 4.8-5.2 V between the 5 V reference circuit terminal 3 and ground.

If less than 4.8 V

6.1. Vehicle OFF, disconnect the harness connector at the K114B HPCM2.
6.2. Test for infinite resistance between the 5 V reference circuit and ground.
If less than infinite resistance, repair the short to ground on the circuit.
If infinite resistance
6.3. Test for less than 2 Ω in the 5 V reference circuit end to end.
If 2 Ω or greater, repair the open/high resistance in the circuit.
If less than 2 Ω, replace the K114B HPCM2.

If greater than 5.2 V

6.1. Vehicle OFF, disconnect the harness connector at the K114B HPCM2, vehicle ON.
6.2. Test for less than 1 V between the 5 V reference circuit and ground.
If 1 V or greater, repair the short to voltage on the circuit.
If less than 1 V, replace the K114B HPCM2.

If between 4.8-5.2 V

7. Verify the scan tool Passenger Compartment Heater Coolant Control Valve Feedback parameter is less than 10%.

If 10% or greater

7.1. Vehicle OFF, disconnect the harness connector at the K114B HPCM2, vehicle ON.
7.2. Test for less than 1 V between the signal circuit terminal 4 and ground.
If 1 V or greater, repair the short to voltage on the circuit.
If less than 1 V, replace the K114B HPCM2.

If less than 10%

8. Install a 3 A fused jumper wire between the signal circuit terminal 4 and the 5 V reference circuit terminal 3.
9. Verify the scan tool Passenger Compartment Heater Coolant Control Valve Feedback parameter is greater than 10%.

If 10% or less

9.1. Vehicle OFF, disconnect the harness connector at the K114B HPCM2.
9.2. Test for infinite resistance between the signal circuit terminal 4 and ground.
If less than infinite resistance, repair the short to ground on the circuit.
If infinite resistance
9.3. Test for less than 2 Ω in the signal circuit end to end.
If 2 Ω or greater, repair the open/high resistance in the circuit.

If less than 2 Ω, replace the K114B HPCM2.

If greater than 95%

10. Connect a test lamp between the control circuit terminal 2 and the B+ circuit terminal 1.
11. Verify the test lamp turns ON and OFF when Commanding the Passenger Compartment Heater Coolant Control Valve ON and OFF with a scan tool.

If the test lamp is always OFF

11.1. Vehicle OFF, disconnect the harness connector at the K114B HPCM2.
11.2. Test for less than 1 V between the control circuit and ground.
If 1 V or greater, repair the short to voltage on the circuit.
If less than 1 V
11.3. Vehicle OFF.
11.4. Test for less than 2 Ω in the control circuit end to end.
If 2 Ω or greater, repair the open/high resistance in the circuit.
If less than 2 Ω, replace the K114B HPCM2.

If the test lamp is always ON

11.1. Vehicle OFF, disconnect the harness connector at the K114B HPCM2.
11.2. Test for infinite resistance between the control circuit terminal 2 and ground.
If less than infinite resistance, repair the short to ground on the circuit.
If infinite resistance, replace the K114B HPCM2.

If the test lamp turns ON and OFF

12. Test or replace the Q66 passenger compartment heater coolant control valve.

Repair Instructions

Perform the Diagnostic Repair Verification after completing the diagnostic procedure.

- Heater Water Shutoff Valve Replacement
- Control Module References for the hybrid powertrain control module 2 replacement, programming and setup

&#169© Copyright Chevrolet. All rights reserved

Symptoms - HVAC Systems - Automatic

Note: The following steps must be completed before using the symptom tables:

1. Perform the Diagnostic System Check - Vehicle before using the Symptom Tables in order to verify that all of the following are true:
   - There are no DTCs set.
   - The control modules can communicate via the serial data link.
2. Review the system operation in order to familiarize yourself with the system functions. Refer to Automatic HVAC Description and Operation .

Visual/Physical Inspection

- Inspect for aftermarket devices which may affect the operation of the HVAC System. Refer to Checking Aftermarket Accessories .
- Inspect the easily accessible or visible system components for obvious damage or conditions which may cause the symptom.
- Verify the A/C compressor turns freely and is not seized.
- Verify that the customer is using the correct key to enable personalisation and is not inadvertently activating auxiliary HVAC controls.
- The A/C compressor will not operate in cold outside air temperatures.
- The following conditions may cause window fogging:
  - Wet carpet or mats
  - High humidity
  - Interior water leak
  - Blocked A/C evaporator drain tube
  - Maximum passenger capacity
  - Blocked body pressure relief valves
- Inspect the air distribution system for causes of reduced air flow:
  - Obstructed or dirty passenger compartment air filter, if equipped
  - Blocked or damaged air inlet or outlet vents

Intermittent

Faulty electrical connections or wiring may be the cause of intermittent conditions. Refer to Testing for Intermittent Conditions and Poor Connections .

Symptom List

Refer to a symptom diagnostic procedure from the following list in order to diagnose the symptom:

HVAC System Malfunction

&#169© Copyright Chevrolet. All rights reserved

HVAC System Malfunction

Diagnostic Instructions

- Perform the Diagnostic System Check - Vehicle prior to using this diagnostic procedure.
- Review Strategy Based Diagnosis for an overview of the diagnostic approach.
- Diagnostic Procedure Instructions provides an overview of each diagnostic category.

Diagnostic Aids

Check the following mechanical fault sources:

- Air distribution box
- Air distribution hoses/air distribution ducts

Reference Information

Schematic Reference

HVAC Schematics

Connector End View Reference

Component Connector End Views

Description and Operation

Automatic HVAC Description and Operation

Electrical Information Reference

- Circuit Testing
- Connector Repairs

- Testing for Intermittent Conditions and Poor Connections
- Wiring Repairs

Scan Tool Reference

Control Module References for scan tool information

Circuit/System Verification

Note: Check for bulletins before proceeding.

1. Vehicle in Service Mode, place the blower motor switch in each speed position. Verify that the blower motor operates properly in each position.
   If the blower motor does not operate properly in all speeds, refer to DTC B0193 .
2. Using the scan tool observe the mode, temperature, air inlet and recirculation door positions. Verify the actual and commanded door positions are within 4 counts of each other.
   If not within the specified range, refer to Circuit/System Testing DTC B0223, B0233, B023A, or B0408 .
3. Engine ON, A/C ON, place the temperature control in the coldest position. Verify that cool air flows from the ducts in the vehicle.
   If the air is not cool, refer to Air Conditioning (A/C) System Performance Test .
4. Turn the A/C OFF and place the temperature control in the warmest position.
   If the air is insufficiently heated refer to Heating Performance Diagnostic .
5. Engine OFF, Vehicle in Service Mode, cover the sunload sensor assembly with a workshop towel or other suitable item. Verify the scan tool Sunload Sensor parameter changes.
   If it does not change, refer to Circuit/System Testing DTC B0183 .
6. Measure actual inside air temperature using a thermometer. Compare this value to the scan tool Inside Passenger Compartment Air Temp. Sensor parameter. The measured temperature should be within 5 degrees of parameter.
   If not within the specified range, refer to Circuit/System Testing DTC B0163 .
7. Vehicle in Service Mode, observe the scan tool A/C Evaporator Temperature Sensor parameter. The reading should be between -39°F and 185°F and change with evaporator air temperature changes.
   If not within the specified range, refer to Circuit/System Testing DTC B0173, B0178, or B3933 or DTC P0536-P0538 or P153B .

Repair Instructions

Perform the Diagnostic Repair Verification after completing the diagnostic procedure.

- HVAC Component Replacement Reference
- Control Module References for HVAC control module replacement, programming and setup

&#169© Copyright Chevrolet. All rights reserved

Actuator Recalibration

Note: Do not adjust any controls on the HVAC control module while the HVAC control module is self-calibrating. If interrupted, improper HVAC performance will result.

When replacing the HVAC control module it will be necessary to allow the HVAC control module to perform a calibration process. When installing the HVAC control module be sure to perform the following:

1. Place the ignition switch to the OFF position.
2. Disconnect the scan tool.
3. Install the HVAC control module.
4. Connect all previously disconnected components.
5. Vehicle in Service Mode.
6. Wait 40 seconds for the HVAC control module to self-calibrate.
7. Verify that no DTCs have set as current DTCs.

When replacing the HVAC actuator it will be necessary to allow the HVAC control module to perform a calibration process. When installing the HVAC actuator be sure to perform one of the following:

Preferred Method (with Scan Tool)

Note: Do not adjust any controls on the HVAC control module while the HVAC control module is self-calibrating. If interrupted, improper HVAC performance will result.

1. Clear all DTCs.
2. Place the ignition switch in the OFF position.
3. Install the HVAC actuator.
4. Connect all previously disconnected components.
5. Start the vehicle.
6. With the scan tool, initiate the HVAC Actuators re-calibration feature of the Remote Heater and Air Conditioning Control Module Special Functions menu.
7. Verify that no DTCs have set as current DTCs.

Alternate Method (without Scan Tool)

Note: Do not adjust any controls on the HVAC control module while the HVAC control module is self-calibrating. If interrupted, improper HVAC performance will result.

1. Clear all DTCs.

2. Place the ignition switch to the OFF position.
3. Install the HVAC actuator.
4. Connect all previously disconnected components.
5. Remove the HVAC control module fuse for a minimum of 10 seconds.
6. Install the HVAC control module fuse.
7. Vehicle in Service Mode.
8. Wait 40 seconds for the HVAC control module to self-calibrate.
9. Verify that no DTCs have set as current DTCs.

© Copyright Chevrolet. All rights reserved

Air Inlet Valve Actuator Replacement

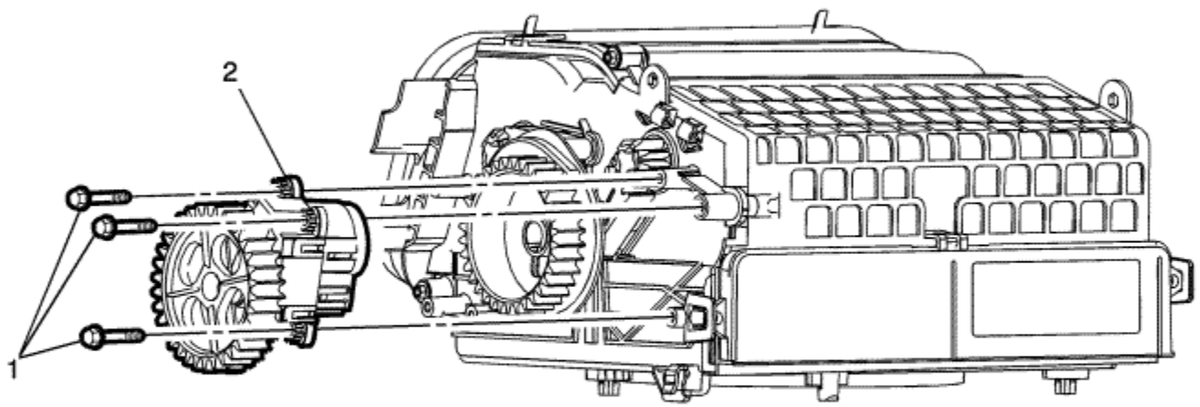

Callout	Component Name
Preliminary Procedures Remove the air inlet assembly. Air Inlet Assembly Replacement	
	Air Inlet Valve Actuator Gear Screw (Qty: 3)

1	**Caution:** Refer to Fastener Caution in the Preface section. **Tighten** 1.5 N·m (13 lb in)
2	Air Inlet Valve Actuator Gear **Procedure** Disconnect the air inlet valve actuator gear electrical connector. **Tip** Actuator is self-calibrating when connecting the battery.Refer to Actuator Recalibration

© Copyright Chevrolet. All rights reserved

Temperature Valve Actuator Replacement

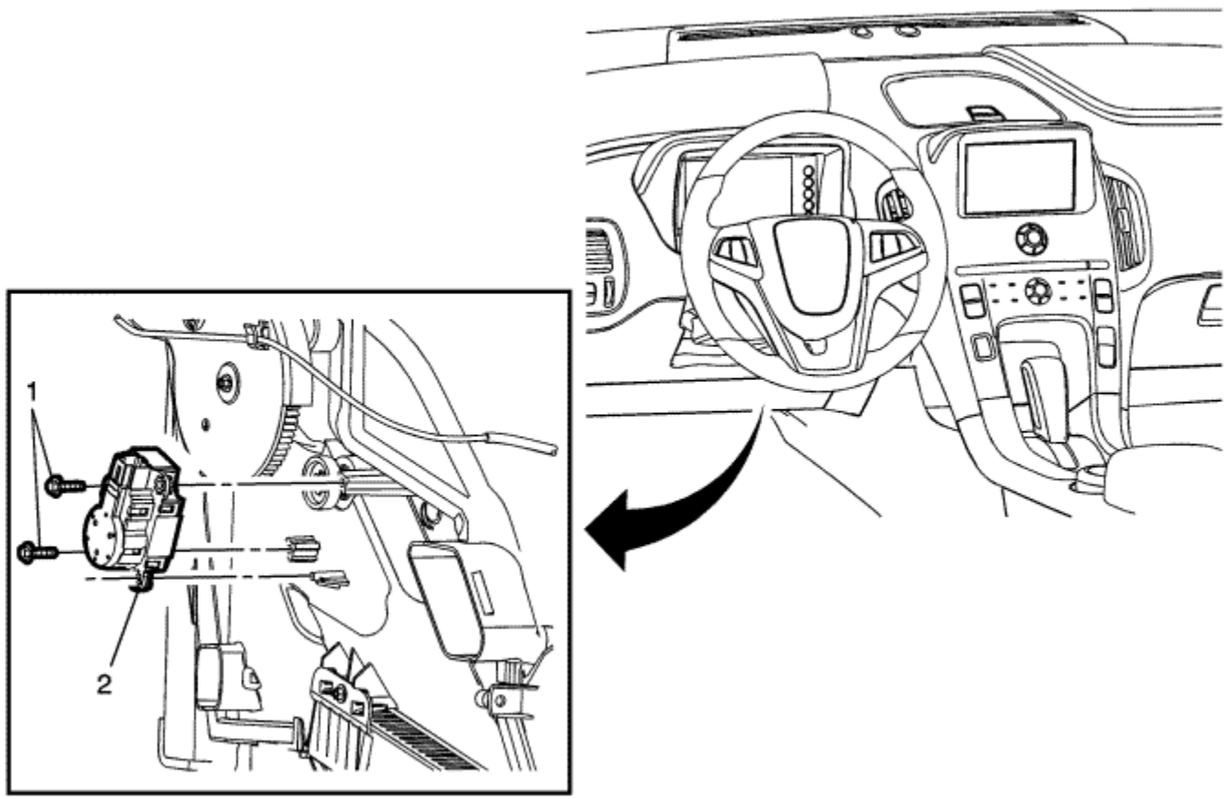

Callout	Component Name
Preliminary Procedures 1. Disconnect the negative and positive cables from the accessory DC power control module. Refer to Battery Positive and Negative Cable Replacement 2. Remove the floor air outlet duct- right side. Refer to Floor Front Air Outlet Duct Replacement - Right Side .	

1	Temperature Valve Actuator Screw (Qty: 2) **Caution:** Refer to Fastener Caution in the Preface section. **Tighten** 1.5 N·m (13 lb in)
2	Temperature Valve Actuator **Tip** Actuator is self-calibrating when connecting the battery.Refer to Actuator Recalibration

© Copyright Chevrolet. All rights reserved

Air Conditioning Refrigerant Temperature Sensor Replacement

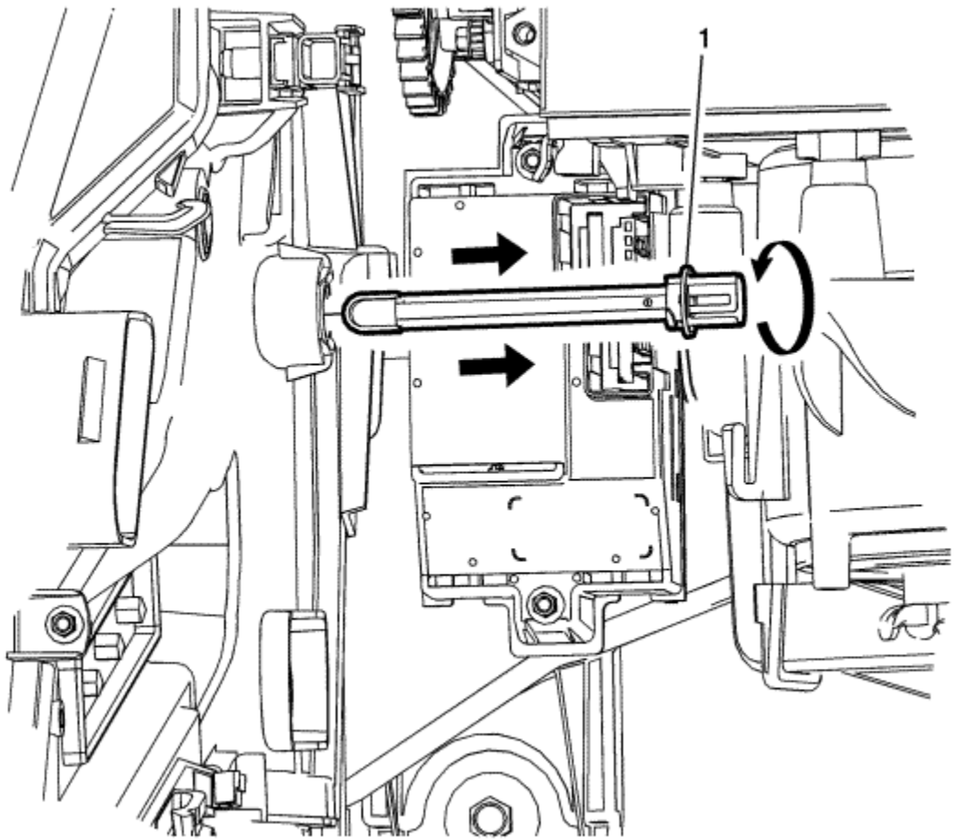

Callout	Component Name
Preliminary Procedure Remove the floor air outlet duct - right side. Refer to Floor Front Air Outlet Duct Replacement - Right Side .	
	Air Conditioning Refrigerant Temperature Sensor

1	**Procedure** 1. Disconnect the refrigerant temperature sensor electrical connector. 2. Twist and pull the refrigerant temperature sensor from the HVAC module assembly.

© Copyright Chevrolet. All rights reserved

Duct Air Temperature Sensor Replacement - Upper

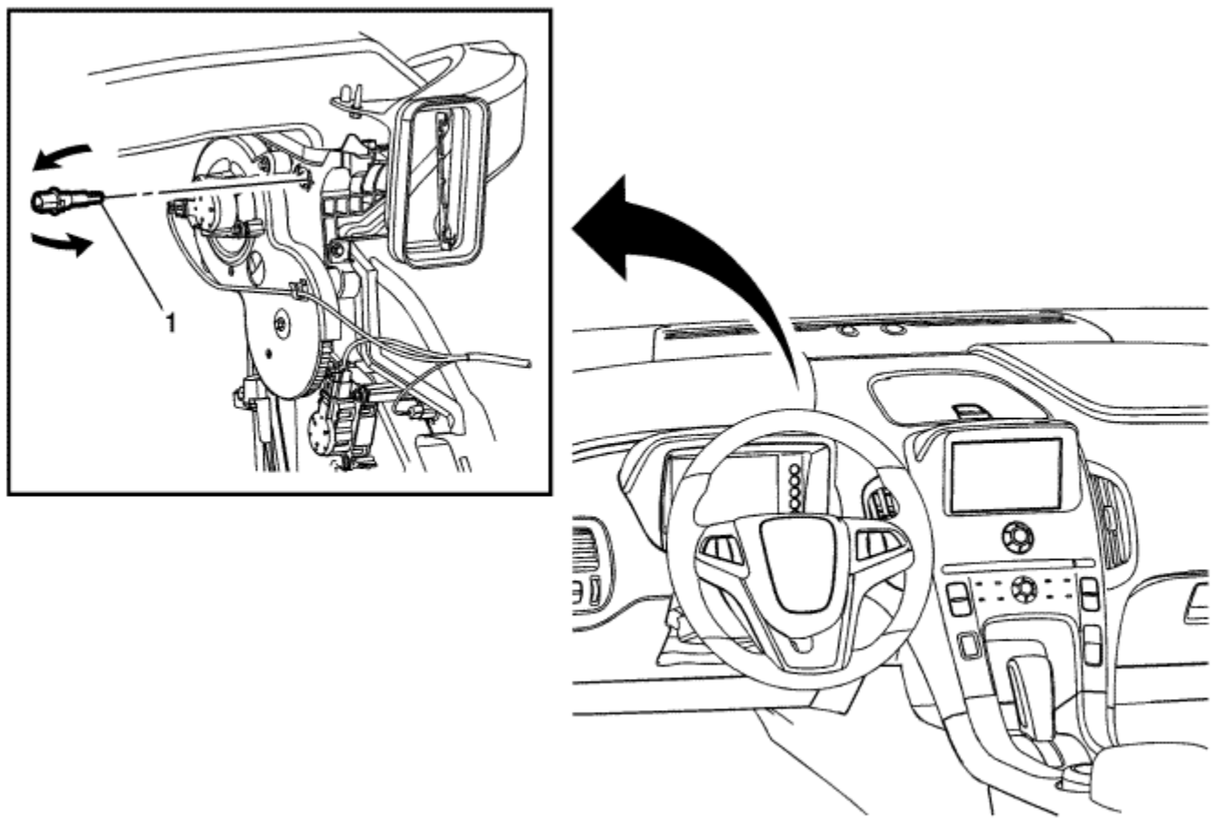

Callout	Component Name
Preliminary Procedures 1. Remove Upper Trim Pad Retainer. Refer to Upper Trim Pad Retainer Replacement . 2. Disconnect the upper air temperature sensor electrical connector.	

1	Air Temperature Sensor - Upper

© Copyright Chevrolet. All rights reserved

Duct Air Temperature Sensor Replacement - Lower

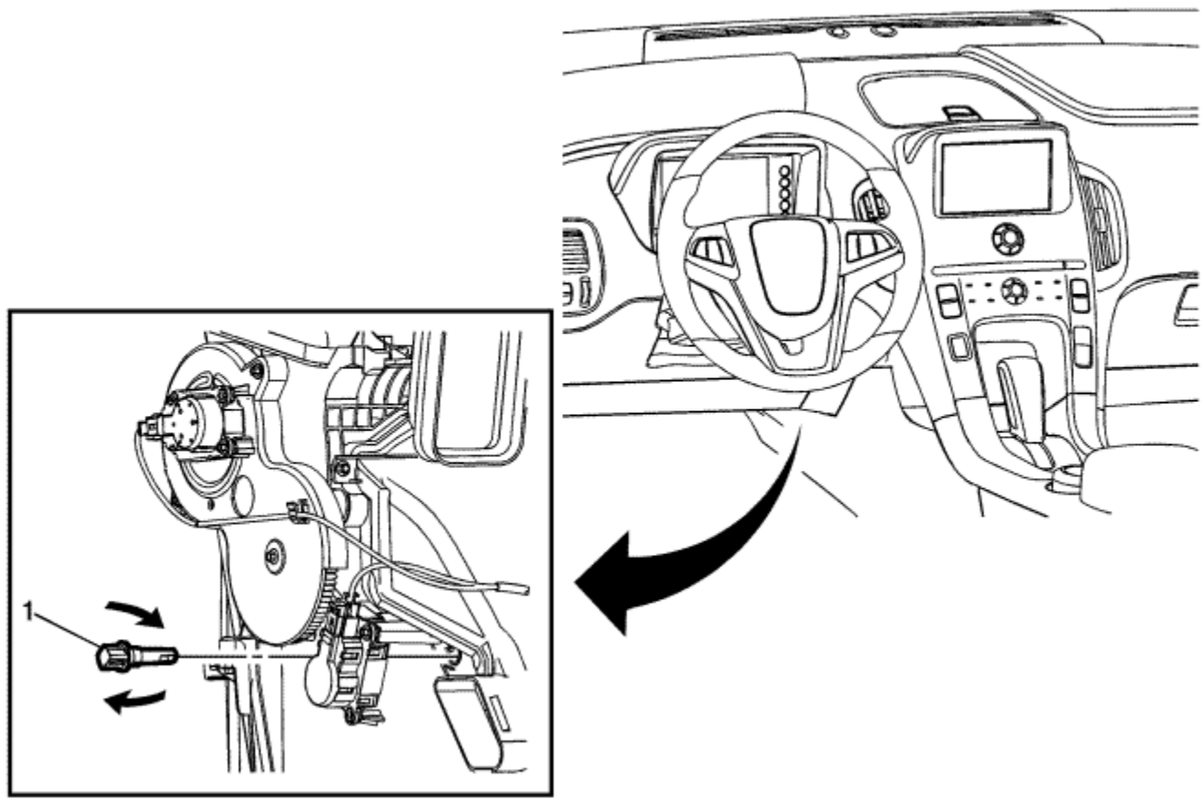

Callout	Component Name

Preliminary Procedures

1. Remove the inflatable restraint instrument panel lower module - driver side. Refer to Inflatable Restraint Instrument Panel Lower Module Replacement - Driver Side .
2. Remove the front air outlet duct left -- side. Refer to Floor Front Air Outlet Duct Replacement - Left Side .
3. Disconnect the lower air temperature sensor electrical connector.

1	Air Temperature Sensor - Lower

© Copyright Chevrolet. All rights reserved

Inside Air Moisture and Windscreen Temperature Sensor Replacement

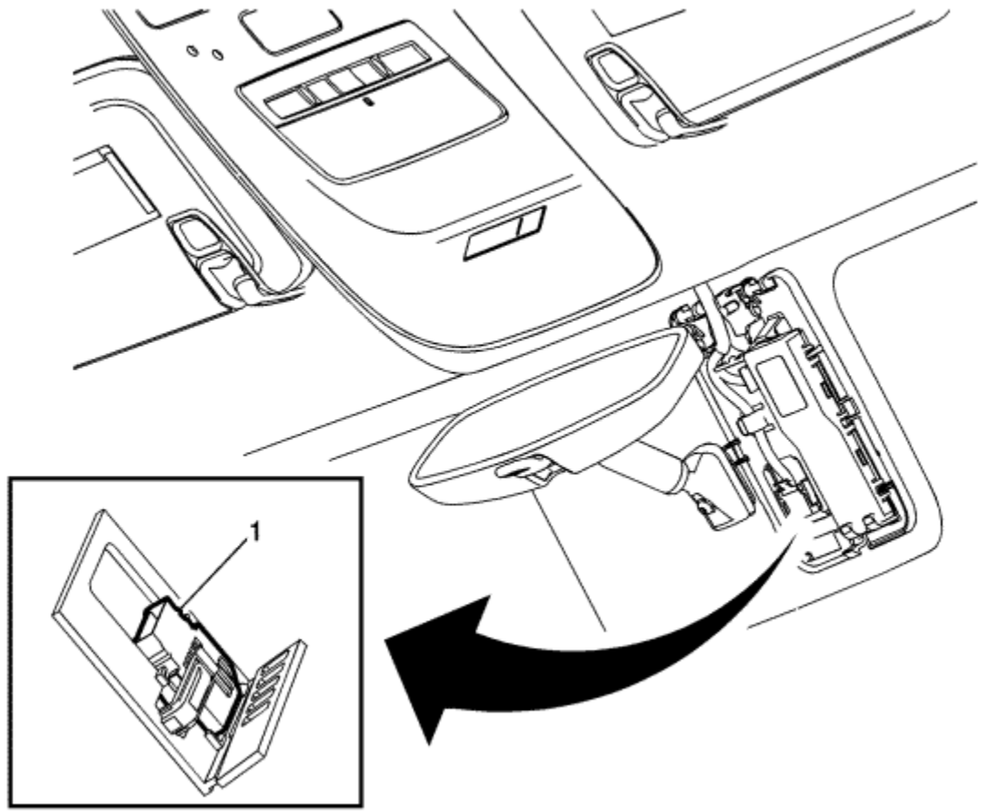

Callout	Component Name
Preliminary Procedure Remove the inside rearview mirror mount plate cover. Refer to Inside Rearview Mirror Mount Plate Cover Replacement .	
	Inside Air Moisture and Windscreen Temperature Sensor

1	**Procedure** 1. Squeeze the two electrical connector tabs and release the connector from the windscreen temperature sensor. 2. Slide the connector upward from the sensor. 3. Slide the sensor from under the multi-function accessory bracket clip. 4. Remove the sensor.

© Copyright Chevrolet. All rights reserved

Sun Load Temperature and Headlamp Automatic Control Ambient Light Sensor Replacement

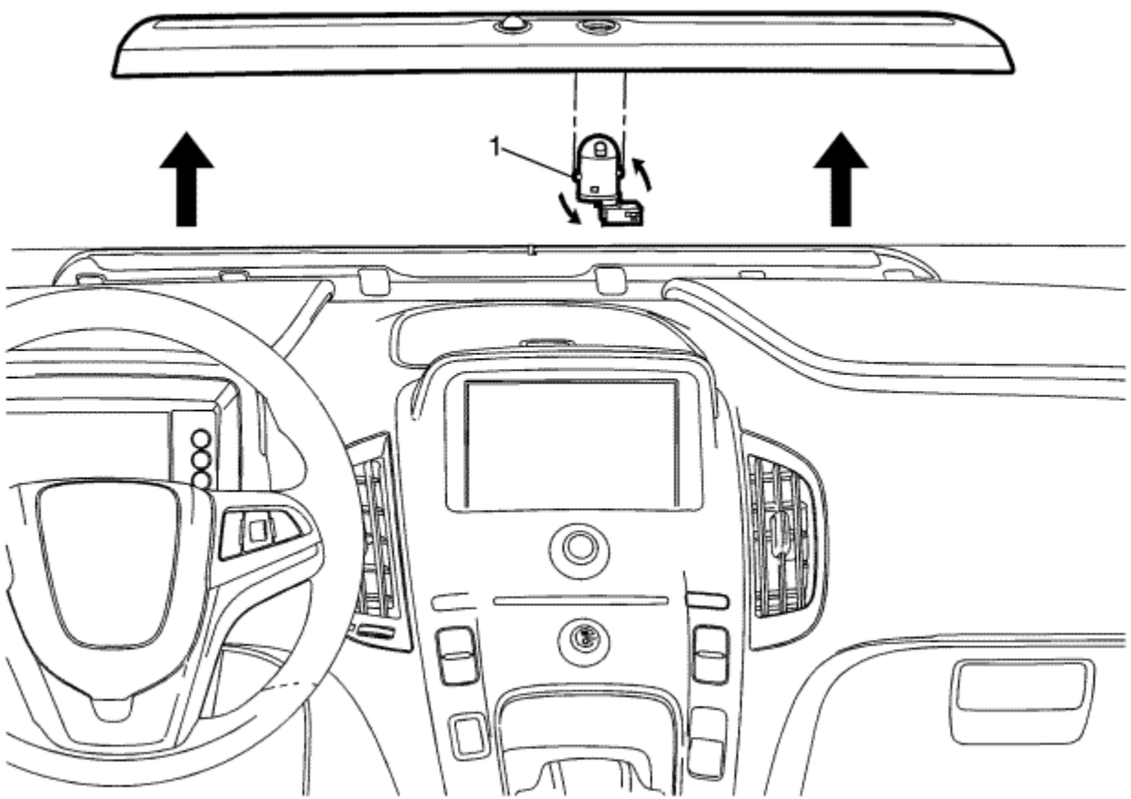

Callout	Component Name
Preliminary Procedure Remove instrument panel upper trim panel. Refer to Instrument Panel Upper Trim Panel Replacement .	
	Sun Load Temperature and Headlamp Automatic Control Ambient Light Sensor

1	**Procedure** 1. Disconnect the electrical connector. 2. Twist the sensor anti-clockwise to remove.

© Copyright Chevrolet. All rights reserved

Automatic HVAC Description and Operation

HVAC Control Components

HVAC Control

The HVAC control contains all switches, which are required to control the functions of HVAC and serve as interface between the operator and the HVAC control module. The selected values are passed to the HVAC control module via serial data.

HVAC Remote Control Module

The HVAC control module is a serial data device that interfaces between the operator and the HVAC system to maintain and control desired air temperature and air distribution settings. The battery positive voltage circuit provides power that the HVAC control module uses for keep alive memory. If the battery positive voltage circuit loses power, all HVAC DTCs and settings will be erased from keep alive memory. The body control module (BCM), which is the vehicle power mode master, provides a device ON-Signal. The HVAC control module provides blower, air delivery mode and air temperature settings.

The HVAC control module supports the following features:

Feature	Availability
Purge	Yes
Personalisation	Yes
Actuator Calibration	Yes

HVAC Coolant Pump

The HVAC control module will control a cabin coolant heater pump based on a valid flow rate. If the HVAC Heating system requests a coolant flow rate, the HVAC coolant pump will be commanded "on" and to the desired speed.

HVAC Cabin Coolant Sensor

The HVAC control module will monitor a coolant temperature sensor input. This will be used to determine the heat source requirements for the coolant heater control module. This input will also be used along with engine temperature and other vehicle inputs.

Mode Actuator

The mode actuator is a 5-pin stepper motor. The HVAC control module supplies a 12 V reference voltage to the stepper motor and energises the 4 stepper motor coils with a pulsed ground signal. The stepper motor puts the mode flap into the calculated position in order to reach the selected position. The null point of the stepper motor will be calibrated, if the stepper motor is new. When the stepper motor is calibrated, the HVAC control module can drive the applicable coil to reach exactly the desired position of the flap.

Air Temperature Actuator

The air temperature actuator is a 5-pin stepper motor. The HVAC control module supplies a 12 V reference voltage to the stepper motor and energises the 4 stepper motor coils with a pulsed ground signal. The stepper motor puts the mixed air flap into the calculated position, in order to reach the selected temperature. The null point of the stepper motor will be calibrated, if the stepper motor is new. When the stepper motor is calibrated, the HVAC control module can drive the applicable coil to reach exactly the desired position of the flap.

Recirculation Actuator

The recirculation actuator is a 5-pin stepper motor. The HVAC control module supplies a 12 V reference voltage to the stepper motor and energises the 4 stepper motor coils with a pulsed ground signal. The stepper motor puts the recirculation flap into the calculated position in order to reach the desired position. The null point of the stepper motor will be calibrated, if the stepper motor is new. When the stepper motor is calibrated, the HVAC control module can drive the applicable coil to reach exactly the desired position of the flap.

Blower Motor Control Module

The fan motor control module controls the speed of the fan motor by increasing or decreasing the voltage drop on the ground side of the fan motor. The HVAC control module provides a low side pulse width modulation (PWM) signal to the fan motor control module via the fan motor speed control circuit. As the requested blower speed increases, the HVAC control module increases the amount of time that the speed signal is modulated to ground. As the requested blower speed decreases, the HVAC control module decreases the amount of time that the signal is modulated to ground.

Duct Temperature Sensors

The air temperature sensors are 2-wire negative temperature co-efficient thermistors. The sensors operate within a temperature range of -40 to +85°C (-40 to +185°F). The sensors are installed in the air distribution ducts and measure the temperature of the air that streams from the ducts. The HVAC control module uses these values to calculate the mixed air flap position.

Evaporator Temperature Sensor

The evaporator temperature sensor is a 2-wire negative temperature co-efficient thermistor. The sensor operates within a temperature range of -40 to +85°C (-40 to +185°F). The sensor is installed at the evaporator and measures its temperature. If the temperature drops close to 3°C (38°F), the A/C compressor will be commanded off by the HVAC control module in order to prevent icing of the evaporator.

A/C Refrigerant Temperature Sensor

The A/C refrigerant temperature sensor is a 2-wire negative temperature co-efficient thermistor. The sensor operates within a temperature range of -40 to +85°C (-40 to +185°F). The sensor is installed in the low side refrigerant line and measures its temperature. If the temperature drops close to 3°C (38°F), the A/C compressor will be commanded off by the Hybrid/EV powertrain control module 2 in order to prevent icing of the evaporator.

Windscreen Temperature and Inside Moisture Sensor

The windscreen temperature and inside moisture sensor includes the relative humidity sensor, windscreen temperature sensor and humidity sensing element temperature sensor.

This sensor assembly provides information about:

- Relative humidity level at windscreen (compartment side)
- Temperature of the windscreen inside (compartment side)
- Temperature of the humidity sensor element

The relative humidity sensor measures the relative humidity of the compartment side of the windscreen. It also detects the temperature of the windscreen surface on the passenger compartment side. Both values are used as control inputs for the HVAC control module application to calculate the fog risk on windscreen compartment side and ability to reduce fuel consumption by decreasing A/C compressor power to a minimum without causing any fog. The sensor will also enable partial recirculation mode in order to improve heat-up performance of the passenger compartment under cold ambient temperature conditions without the risk of mist build-up on the windscreen. The humidity sensor element temperature sensor supplies the temperature of the humidity sensor element.

Ambient Light/Sunload Sensor

The ambient light/sunload sensor includes the sunload sensor and passenger compartment temperature sensor.

This sensor assembly provides information about:

- Sun heat intensity
- Passenger compartment temperature

The solar sensor is connected to ground and to a 5 V stabilised voltage supply through the HVAC control module. As the sunload increases, the sensor signal voltage also increases and vice versa. The signal varies between 1.4-4.5 V and is provided to the HVAC control module.

The passenger compartment temperature sensor is a negative temperature co-efficient thermistor. A signal and low reference circuit enables the sensor to operate. As the air temperature increases, the sensor resistance decreases. The sensor signal varies between 0-5 V.

Bright or high intensity light causes the vehicles interior temperature to increase. The HVAC system compensates for the increased temperature by diverting additional cool air into the vehicle.

A/C Compressor

The AC compressor function is to provide refrigerant flow in the AC refrigerant loop to help cool down the cabin, help dehumidify the air in a defrost mode and help maintain the battery temperature. Rather than a more typical pulley, the A/C compressor uses a 3-phase alternating current, high voltage electric motor to operate. It has an on-board inverter that takes high voltage direct current from the vehicle's high voltage battery and inverts it to alternating current for the motor. The AC compressor shall be activated when any of the three following events occur:

- The customer pushes the AC button or
- The HVAC control, in ECO climate or Comfort Climate Settings, requests the electric AC compressor on to help in cooling the cabin or removing moisture in conditions where the windows may fog or
- The hybrid/EV powertrain control module 2 requests the AC compressor on to help maintain the battery temperature

The hybrid/EV powertrain control module 2 uses values from the A/C refrigerant pressure sensor, A/C refrigerant thermistor, duct temperature sensors, ambient air temperature sensor, passenger compartment temperature sensor, evaporator temperature sensor, battery cell temperature sensors, battery coolant temperature sensors and battery coolant pumps to determine the speed at which the compressor will operate. This message is sent from the hybrid/EV powertrain control module 2 to the A/C compressor control module via serial data message.

Air Speed

The blower control switch is part of the HVAC faceplate control. The selected value of the blower switch position is sent to the HVAC control module via serial data.

The blower motor control module is an interface between HVAC control module and blower motor. The blower motor control module regulates supply voltage and ground circuits to blower motor. The HVAC control module provides a PWM signal to the blower motor control module in order to command the desired blower motor speed. The blower motor control module supplies battery voltage to the blower motor and uses the blower motor ground as a low side control to adjust the blower motor speed. The voltage amounts between 2-13 V and changes linear to the height of the PWM signal.

Air Delivery

The HVAC control module controls the distribution of air within the passenger compartment by the use of the mode actuator. The modes that may be selected are:

- Defrost
- Defog
- Panel
- Floor
- BiLevel

In auto mode, the air delivery mode is controlled automatically based on cooling/warming needs of the compartment. The desired air distribution mode can be selected with the air distribution buttons at the HVAC faceplate control. The HVAC control delivers the values to the HVAC control module via serial data. The HVAC control module controls the mode actuator so that it drives the flap to the calculated position. Depending on the position of the flap, air is distributed through various ducts leading to the outlets in the dash. Turning the mode flap to the defrost position, the HVAC control module will move the recirculation actuator to outside air, reducing window fogging. When defrost is selected, the blower motor will be activated. The HVAC control module enables a high volume of air delivered to the front defrost vents. A/C is available in all

modes.

The rear window demister does not affect the HVAC system.

Heating and A/C Operation

The purpose of the heating and A/C system is to provide heated and cooled air to the interior of the vehicle. The A/C system will also remove humidity from the interior and reduce windscreen fogging. Regardless of the temperature setting, the following can affect the rate that the HVAC system can achieve the desired temperature:

- Ambient air temperature
- Difference between inside and desired temperature
- Blower motor speed setting
- Mode setting
- Air conditioning control module operation
- Hybrid/EV powertrain control module 2 operation
- Coolant heater control module

Pressing the climate mode buttons (Comfort Mode or ECO Mode) enables the HVAC control module to determine whether to request A/C compressor and coolant heater activation. Based on the thermal conditions of the vehicle the HVAC control module sends a serial data message to the hybrid/EV powertrain control module 2 for the A/C request. The hybrid/EV powertrain control module 2 will request the A/C compressor control Module to engage A/C. The HVAC control module sends the heating request to the coolant heater control module to produce heat.

Climate Mode button (Fan Only) will disable all heating and cooling of the vehicle unless overridden by dehumidification requirements.

Recirculation Operation

The recirculation button is part of the HVAC faceplate control. The selected recirculation button position is sent to the HVAC control module via serial data. The HVAC control module controls the air intake through the recirculation actuator. The recirculation switch closes and opens the recirculation flap in order to circulate the air within the vehicle, or route outside air into the vehicle.

Inside air recirculation is prevented if the defrost mode is not active. When the defrost mode is active, the recirculation actuator opens the recirculation flap and outside air is circulated to the windscreen to reduce fogging.

In automatic recirculation mode the values of the windscreen temperature and inside moisture sensor are used as control inputs for the HVAC control module application to calculate the fog risk on the passenger compartment side of the windscreen. The A/C compressor and the defrost mode are activated to prevent or remove fog on the passenger compartment side of the windscreen.

Automatic Operation

The user can select to operate the Blower, Recirculation and Air Delivery operations in auto per auto operation mode.

To put the HVAC system in full automatic mode, the following is required:

1. The auto button must be pressed.
2. The system indicates that all 3 functions are being operated automatically by lighting the auto button LED.

When the auto button is pressed, the system responds by putting the blower, air delivery and recirculation into auto mode. If any of these functions are adjusted then the auto button indication will go off and the function will leave auto operation and follow the user requested setting: auto, blower, air delivery and recirculation. In this setting the blower request is adjusted to quickly heat the cabin initially. After comfort is reached, the blower is minimised to reduce noise and temperature drifts.

Under cold ambient temperatures, the automatic HVAC system provides heat in the most efficient manner. The operator can select an extreme temperature setting but the system will not warm the vehicle any faster. Under warm ambient temperatures, the automatic HVAC system also provides air conditioning in the most efficient manner. Selecting an extreme cool temperature will not cool the vehicle any faster.

In automatic mode the values of the windscreen temperature and inside moisture sensor are used as control inputs for the HVAC control module application to calculate the fog risk on the passenger compartment side of the windscreen and ability to reduce fuel consumption by decreasing A/C compressor power to a minimum without causing any fog. The A/C compressor and the defrost mode may be activated to prevent or remove fog on the passenger compartment side of the windscreen. The sensor will also enable partial recirculation mode in order to improve heat-up performance of the passenger compartment under cold ambient temperature conditions without the risk of mist build-up on the windscreen.

Coolant Heater Control Module

The coolant heater control module is an essential element of the hybrid heating system. The hybrid/EV powertrain control module 2 controls the passenger compartment heater coolant control valve, and the HVAC commands the coolant heater control module activation. Heated coolant either from the engine or the coolant heater control module will meet HVAC temperature demands. The coolant heater control module will be commanded "off" if the coolant temperature exceeds the desired temperature. If the coolant temperature reaches an even higher level, the passenger compartment heater coolant control valve will move to the 'bypass' position, preventing coolant from flowing through the coolant heater control module and the cabin heater core.

Coolant heat generated by the engine is also an element of the heating system. Once the engine coolant is warm enough to supply the required heat, the passenger compartment heater coolant control valve will move to the 'link' position, which allows sharing of coolant between the engine, the coolant heater control module and passenger compartment heater core. The coolant heater control module power level will be reduced and/or cycled on/off as the engine turns on/off during charge-sustaining mode, maintaining cabin comfort. When the engine is utilised for charge sustaining mode the thermostat will control the normal engine operating coolant temperature. The thermostat also creates a restriction for the cooling system that promotes a positive coolant flow and helps prevent cavitation.

Heater coolant enters the heater core through the inlet heater hose, in a pressurised state. The heater core is located inside the HVAC module. The ambient air drawn through the HVAC module, absorbs the heat of the coolant flowing through the heater core. Heated air is distributed to the passenger compartment, through the HVAC module, for passenger comfort. Opening or closing the air temperature flap controls the amount of heat delivered to the passenger compartment. The coolant exits the heater core through the return heater hose and recirculates back to the system as controlled by the coolant passenger compartment heater coolant control valve.

A/C Compressor Cycle

Refrigerant is the key element in an air conditioning system. R-134a is presently the only Environmental Protection Agency approved refrigerant for automotive use. R-134a is a very low temperature gas that can transfer the undesirable heat and moisture from the passenger compartment to the outside air.

The compressor builds pressure on the vapour refrigerant. Compressing the refrigerant also adds heat to the refrigerant. The refrigerant is discharged from the compressor, through the discharge hose, and forced to flow to the condenser and then through the balance of the A/C system.

Compressed refrigerant enters the condenser in a high temperature, high pressure vapour state. As the refrigerant flows through the condenser, the heat of the refrigerant is transferred to the ambient air passing through the condenser. Cooling the refrigerant causes the refrigerant to condense and change from a vapour to a liquid state.

The condenser is located in front of the radiator for maximum heat transfer. The condenser is made of aluminium tubing and aluminium cooling fins, which allows rapid heat transfer for the refrigerant. The semi-cooled liquid refrigerant exits the condenser and flows to the Receiver/Dehydrator(R/D).

The R/D contains desiccant that absorbs moisture that may be in the refrigerant system. The R/D also acts as a storage vessel to ensure that a steady flow of liquid reaches the Thermal Expansion Valve (TXV). The refrigerant exits the R/D and flows through the liquid line to the TXV.

The TXV is located at the front of dash and attaches to the evaporator inlet and outlet pipes. The TXV is the dividing point for the high and the low pressure sides of the A/C system. As the refrigerant passes through the TXV, the pressure on the refrigerant is lowered. The TXV also metres the amount of liquid refrigerant that can flow into the evaporator.

Refrigerant exiting the TXV flows into the evaporator core in a low pressure, liquid state. The HVAC control module blows air through the evaporator core. Warm and moist air will cause the liquid refrigerant to boil inside of the evaporator core. The boiling refrigerant absorbs heat from the ambient air and draws moisture onto the evaporator. The refrigerant exits the evaporator through the suction line and back to the A/C compressor, in a vapour state, and completing the A/C cycle of heat removal. At the A/C compressor, the refrigerant is compressed again and the cycle of heat removal is repeated.

The conditioned air is distributed through the HVAC control module for passenger comfort. The heat and moisture removed from the passenger compartment will also change form, or condense, and is discharged from the HVAC control module as water through a drain to the outside (underside) of the vehicle.

The A/C system is mechanically protected with the use of a high pressure relief valve. If the A/C refrigerant pressure sensor fails or if the refrigerant system becomes restricted and refrigerant pressure continued to rise, the high pressure relief will pop open and release refrigerant from the system.

&#169© Copyright Chevrolet. All rights reserved

Temperature Versus Resistance

Drive Motor 1 and 2 and Auxiliary Transmission Fluid Pump Temperature Sensors

°C	°F	OHMS (±10%)
Temperature vs Resistance Values (Approximate)		
230	446	106
220	428	128
210	410	154
200	392	187
190	374	228
180	356	281
170	338	349
160	320	436
150	302	550
140	284	701
130	266	903
120	248	1176
110	230	1550
100	212	2069
90	194	2799
80	176	3843
70	158	5359
60	140	7599
50	122	10,970
40	104	16,150
30	86	24,270
20	68	37,300
10	50	58,750

0	32	94,980
-10	14	158,000
-20	-4	271,200
-30	-22	481,000
-40	-40	884,600

© Copyright Chevrolet. All rights reserved

Hybrid Controls Schematics

Figure 1: Power, Earth and Data Communication
Figure 2: Drive Motors Monitoring
Figure 3: Transmission Internal Mode Switch
Figure 4: Drive Motors and Transmission Fluid Pump Controls

© Copyright Chevrolet. All rights reserved

Hybrid Controls Electronic Component Views

Figure 1: Hybrid Controls Electronic Component Views
Figure 2: High-Voltage Terminal Locator

© Copyright Chevrolet. All rights reserved

DTC P0335 or P0336

Diagnostic Instructions

- Perform the Diagnostic System Check - Vehicle prior to using this diagnostic procedure.
- Review Strategy Based Diagnosis for an overview of the diagnostic approach.
- Diagnostic Procedure Instructions provides an overview of each diagnostic category.

DTC Descriptor

DTC P0335: Crankshaft Position Sensor Circuit

DTC P0336: Crankshaft Position Sensor Performance

Circuit/System Description

The crankshaft position sensor detects crankshaft speed and position. The crankshaft position sensor produces an alternating current (AC) voltage of different amplitude and frequency. The frequency depends on the velocity of the crankshaft, and the AC voltage output depends on the crankshaft position and battery voltage. The crankshaft position sensor works in conjunction with a 58 tooth reluctor wheel attached to the crankshaft. The engine control module (ECM) can synchronise the ignition timing, fuel injector timing, and spark knock control based on the crankshaft position sensor and the camshaft position sensor inputs. The crankshaft position sensor is also used to detect misfire. The ECM also sends a replicated signal over a dedicated line to the hybrid powertrain control module.

The hybrid powertrain control module uses crankshaft speed and position to confirm ICE status in various modes; for example to confirm Autostart and Autostop functionality. In addition to the signal sent over the dedicated line, this information is also sent from the ECM to the hybrid powertrain control module over serial data. The serial data status will be used by the hybrid powertrain control module in the event of a failure of this circuit.

Conditions for Running the DTC

P0335 or P0336

The vehicle is ON.

Conditions for Setting the DTC

P0335

No signal from the crank sensor for more than 2 seconds.

P0336

The signal from the crank sensor is invalid for more than 1 second.

Action Taken When the DTC Sets

DTCs P0335 and P0336 are Type B DTCs.

Conditions for Clearing the DTC

DTCs P0335 and P0336 are Type B DTCs.

Diagnostic Aids

A high-resistance earth at either the power inverter module or the ECM may cause these DTCs to set intermittently.

Reference Information

Schematic Reference

- Hybrid Controls Schematics
- Engine Controls Schematics

Connector End View Reference

Component Connector End Views

Description and Operation

- Electronic Ignition System Description
- Hybrid Modes of Operation Description

Electrical Information Reference

- Circuit Testing
- Connector Repairs
- Testing for Intermittent Conditions and Poor Connections
- Wiring Repairs

DTC Type Reference

Powertrain Diagnostic Trouble Code (DTC) Type Definitions

Scan Tool Reference

Control Module References for scan tool information

Circuit/System Verification

1. Verify that ECM DTCs P0335 or P0336 are not set.
   If either of the DTCs are set, refer to Engine Controls and Fuel DTC P0335 or P0336 .
2. With the engine running, observe the hybrid powertrain control module Engine Speed parameter with a scan tool. The parameter should display the current engine speed, matching the tachometer and/or the ECM Engine Speed parameter.
   If the hybrid powertrain control module Engine Speed parameter displays a value other than the current engine speed, continue with Circuit/System Testing.

Circuit/System Testing

1. Vehicle OFF, disconnect the X1 harness connector at the T6 power inverter module.
2. Vehicle in Service Mode, test for 4.8-5.2 V between the signal circuit terminal 5 and earth.
   If less than the specified range, test the signal circuit for a short to ground or an open/high resistance. If the circuit tests normal, replace the K20 ECM.
   If greater than the specified range, test the 5 V reference circuit for a short to voltage. If the circuit tests normal, replace the K20 ECM.
3. If the DTC is set, program the T6 power inverter module. If the DTC resets, replace the T6 power inverter module.

Repair Instructions

Perform the Diagnostic Repair Verification after completing the diagnostic procedure.

- Control Module References for engine control module replacement, programming, and setup
- Control Module References for Drive Motor Generator Power Inverter module, also called the power inverter module, replacement, programming and set-up

&#169© Copyright Chevrolet. All rights reserved

DTC P0506 or P0507

Diagnostic Instructions

- Perform the Diagnostic System Check - Vehicle prior to using this diagnostic procedure.
- Review Strategy Based Diagnosis for an overview of the diagnostic approach.
- Diagnostic Procedure Instructions provides an overview of each diagnostic category.

DTC Descriptor

DTC P0506: Idle Air Control (IAC) System - RPM Too Low

DTC P0507: Idle Air Control (IAC) System - RPM Too High

Circuit/System Description

The hybrid powertrain control module determines the engine speed which is based on the high-voltage battery pack state of charge. The ECM achieves throttle positioning by providing a pulse width modulated voltage to the throttle actuator motor. The throttle blade is spring loaded in both directions, and the default position is slightly open. The hybrid powertrain control module can detect a condition where the engine is cranking but does not start or has stalled, or if the engine speed does not match the commanded speed.

The throttle actuator control (TAC) motor is controlled by the engine control module (ECM). The DC motor located in the throttle body drives the throttle blade. In order to decrease engine speed, along with spark and fuel delivery changes the ECM commands the throttle closed reducing air flow into the engine and the engine speed decreases. In order to increase engine speed, the ECM commands the throttle plate open allowing more air to pass the throttle plate. If the hybrid powertrain control module detects the actual engine speed is not within a predetermined range of the commanded engine speed, this DTC sets.

Conditions for Running the DTC

- DTCs , P0068, P0101, P0102, P0103, P0112, P0113, P0116, P0117, P0118, P0121, P0122, P0123, P0128, P0171, P0172, P0201, P0202, P0203, P0204, P0222, P0223, P0300-P0304, P0351-P0354, P0461-P0463, P0496, P0606, P06A3, P0721, P1516, P2066-P2068, P2101, P2122, P2123, P2127, P2128, P2135, P2138, P2227-P2230 are not set.
- The system voltage is between 9-32 volts.
- The accelerator pedal position is valid.

- The accelerator pedal position is less than 1 percent.
- The engine has been running for greater than 60 seconds.
- The vehicle speed is less than 1.6 km/h (1 mph).
- The barometric pressure (BARO) is greater than 70 kPa (11 psi).
- The engine coolant temperature (ECT) is greater than 60-125°C (140-257°F).
- The intake air temperature (IAT) is warmer than -20°C (-4°F).
- The commanded engine speed is steady within 25 RPM.
- A scan tool output control is not active.
- DTCs P0506 or P0507 run continuously when the above conditions are met for greater than 10 seconds.

Conditions for Setting the DTC

P0506

The actual engine speed is approximately 75 RPM less than the commanded engine speed.

P0507

The actual engine speed is approximately 150 RPM greater than the commanded engine speed.

Action Taken When the DTC Sets

DTCs P0506 and P0507 are Type B DTCs.

Conditions for Clearing the DTC

DTCs P0506 and P0507 are Type B DTCs.

Diagnostic Aids

- A stalling condition can cause DTC P0506 to set.
- An intermittent vehicle speed sensor (VSS) signal can cause DTC P0507 to set.

Reference Information

Schematic Reference

Hybrid Controls Schematics

Connector End View Reference

Component Connector End Views

Electrical Information Reference

- Circuit Testing
- Connector Repairs
- Testing for Intermittent Conditions and Poor Connections
- Wiring Repairs

DTC Type Reference

Powertrain Diagnostic Trouble Code (DTC) Type Definitions

Scan Tool Reference

Control Module References for scan tool information

Circuit/System Verification

1. Verify that there are no other DTCs set.
   If any other DTCs are set, refer to Diagnostic Trouble Code (DTC) List - Vehicle .
2. Verify that none of the conditions listed below exist:

   P0506

   - Excess deposits in the Q38 throttle body. Refer to Throttle Body Inspection and Cleaning .
   - Restricted exhaust
   - Mechanical conditions that limit engine speed
   - Parasitic load on the engine -- For example, a transmission condition or a belt driven accessory condition.

     If a condition is found, repair as necessary.

   P0507

   - Vacuum leaks
   - A throttle valve that does not close correctly

- Verify the correct operation of the crankcase ventilation system. Inspect for the following conditions:
  - The routing of the positive crankcase ventilation (PCV) system
  - Vacuum leaks in the PCV system

    If a condition is found, repair as necessary.

Repair Instructions

Perform the Diagnostic Repair Verification after completing the diagnostic procedure.

&#169© Copyright Chevrolet. All rights reserved

DTC P0601-P0604, P0606, P062F, P1EB6 or P1EB7 - Hybrid Powertrain Control Module

Diagnostic Instructions

- Perform the Diagnostic System Check - Vehicle prior to using this diagnostic procedure.
- Review Strategy Based Diagnosis for an overview of the diagnostic approach.
- Diagnostic Procedure Instructions provides an overview of each diagnostic category.

DTC Descriptor

DTC P0601: Control Module Read Only Memory Performance

DTC P0602: Control Module Not Programmed

DTC P0603: Control Module Long Term Memory Reset

DTC P0604: Control Module Random Access Memory Performance

DTC P0606: Control Module Processor Performance

DTC P062F: Control Module Long Term Memory Performance

DTC P1EB6: Drive Motor 1 Control Module Long Term Memory Reset

DTC P1EB7: Drive Motor 2 Control Module Long Term Memory Reset

Circuit/System Description

This is an internal fault detection of the hybrid powertrain control module. The hybrid powertrain control module is internal to the power inverter module, often referred to as the drive motor generator power inverter module and is not serviced separately. This fault is handled inside the hybrid powertrain control module and no external circuits are involved.

Conditions for Running the DTC

- The vehicle is ON.
- The system voltage is greater than 9.5V.

Conditions for Setting the DTC

The control module has detected an internal malfunction.

Action Taken When the DTC Sets

- DTCs P0601-P0604, P0606, P061A, P061B, P062F, P1EB6, and P1EB7 are Type A DTCs.
- The hybrid powertrain control module requests the hybrid powertrain control module 2 to open the high-voltage contactor relays.

Conditions for Clearing the DTC

DTCs P0601-P0604, P0606, P061A, P061B, P062F, P1EB6, and P1EB7 are Type A DTCs.

Reference Information

Electrical Information Reference

- Circuit Testing
- Connector Repairs
- Testing for Intermittent Conditions and Poor Connections
- Wiring Repairs

DTC Type Reference

Powertrain Diagnostic Trouble Code (DTC) Type Definitions

Circuit/System Verification

1. Verify that DTC P0562 is not set.
   If DTC is set, refer to DTC B1325, B1330, B1517, C0800, C0899, C0900, C12E1, C12E2, P0562, P0563, P1A0C, P1A0D, or P1EFC .
2. If the DTC is set, program the T6 power inverter module. If the DTC resets, replace the T6 power inverter module.

Repair Instructions

Perform the Diagnostic Repair Verification after completing the diagnostic procedure.

Control Module References for Drive Motor Generator Power Inverter Module, also called the power inverter module, replacement, programming and set-up.

© Copyright Chevrolet. All rights reserved

DTC P061A or P061B

Diagnostic Instructions

- Perform the Diagnostic System Check - Vehicle prior to using this diagnostic procedure.
- Review Strategy Based Diagnosis for an overview of the diagnostic approach.
- Diagnostic Procedure Instructions provides an overview of each diagnostic category.

DTC Descriptor

DTC P061A: Internal Control Module Torque System Circuitry Performance

DTC P061B: Internal Control Module Torque Calculation Performance

Circuit/System Description

The hybrid powertrain control module is responsible for vehicle torque management. To accomplish this, the hybrid powertrain control module constantly monitors all aspects of requested and actual delivered torque from involved controllers. If a torque management fault is detected propulsion power will be reduced or shut down. The hybrid powertrain control module is internal to the power inverter module, often referred to as the drive motor generator power inverter module and is not serviced separately. This fault is handled inside the hybrid powertrain control module and no external circuits are involved.

Conditions for Running the DTC

- The vehicle is ON.
- The system voltage is at least 9.5 V.

Conditions for Setting the DTC

The control module has detected an internal malfunction.

Action Taken When the DTC Sets

- DTCs P061A or P061B are Type A DTCs.
- The hybrid powertrain control module requests the hybrid powertrain control module 2 to open the high-voltage contactor relays.

Conditions for Clearing the DTC

DTCs P061A and P061B are Type A DTCs.

Reference Information

Electrical Information Reference

- Circuit Testing
- Connector Repairs
- Testing for Intermittent Conditions and Poor Connections
- Wiring Repairs

DTC Type Reference

Powertrain Diagnostic Trouble Code (DTC) Type Definitions

Circuit/System Verification

1. Verify that DTC P0562 is not set.
   If DTC is set, refer to DTC B1325, B1330, B1517, C0800, C0899, C0900, C12E1, C12E2, P0562, P0563, P1A0C, P1A0D, or P1EFC .
2. If the DTC is set, replace the T6 power inverter module.

Repair Instructions

Perform the Diagnostic Repair Verification after completing the diagnostic procedure.

Control Module References for Drive Motor Generator Power Inverter Module, also called the power inverter module, replacement, programming and set-up.

&#169© Copyright Chevrolet. All rights reserved

DTC P06AF

Diagnostic Instructions

- Perform the Diagnostic System Check - Vehicle prior to using this diagnostic procedure.
- Review Strategy Based Diagnosis for an overview of the diagnostic approach.
- Diagnostic Procedure Instructions provides an overview of each diagnostic category.

DTC Descriptor

DTC P06AF: Torque Management System Performance - Forced Engine Shutdown

Circuit/System Description

The hybrid powertrain control module monitors a state of health message that the ECM transmits to verify the ECM is functioning properly. The hybrid powertrain control module is part of the power inverter module, often referred to as the drive motor power inverter module, and is not serviced separately.

Conditions for Running the DTC

The system voltage is greater than 9.5 V.

Conditions for Setting the DTC

The hybrid powertrain control module does not detect a valid state of health message from the ECM.

Action Taken When the DTC Sets

- DTC P06AF is a Type A DTC.
- The hybrid powertrain control module requests the hybrid control module 2 to open the high-voltage contactor relays.

Conditions for Clearing the DTC

DTC P06AF is a Type A DTC.

Reference Information

DTC Type Reference

Powertrain Diagnostic Trouble Code (DTC) Type Definitions

Circuit/System Verification

Verify that ECM DTC P0606, P0A1D is not set.

If the DTC is set, refer to Diagnostic Trouble Code (DTC) List - Vehicle .

Circuit/System Testing

1. Vehicle OFF, remove the F103 drive motor generator control module sight shield. Refer to Drive Motor Generator Power Inverter Module Cover Replacement .
2. Disconnect the T6 power inverter module X1 connector and the ECM X1 connector.
3. Test for less than 1 Ω between the serial data circuits listed below:
   - T6 power inverter module X1 connector terminal 10 and K20 ECM X1 connector terminal 43
   - T6 power inverter module X1 connector terminal 11 and K20 ECM X1 connector terminal 29

   If greater than the specified range, test the serial data circuit for an open/high resistance condition. If the circuit tests normal, replace the K20 ECM.
4. If the DTC is set, program the T6 power inverter module. If the DTC resets, replace the T6 power inverter module.

Repair Instructions

Perform the Diagnostic Repair Verification after completing the diagnostic procedure.

Control Module References for ECM or Drive Motor Generator Power Inverter Module, also called the power inverter module, replacement, programming, and set-up.

&#169© Copyright Chevrolet. All rights reserved

DTC P06B1, P06B2, P06B4, P06B5, P06E7 or P06E8

Diagnostic Instructions

- Perform the Diagnostic System Check - Vehicle prior to using this diagnostic procedure.
- Review Strategy Based Diagnosis for an overview of the diagnostic approach.
- Diagnostic Procedure Instructions provides an overview of each diagnostic category.

DTC Descriptor

DTC P06B1: Sensor Supply Positive Voltage Circuit 1 Low Voltage

DTC P06B2: Sensor Supply Positive Voltage Circuit 1 High Voltage

DTC P06B4: Sensor Supply Positive Voltage Circuit 2 Low Voltage

DTC P06B5: Sensor Supply Positive Voltage Circuit 2 High Voltage

DTC P06E7: Sensor Supply Positive Voltage Circuit 3 Low Voltage

DTC P06E8: Sensor Supply Positive Voltage Circuit 3 High Voltage

Circuit/System Description

The motor control modules share an internal 15 V reference power supply in order to operate the drive motor sensors processors. This fault is handled inside the power inverter module, often referred to as the drive motor generator power inverter module, and no external circuits are involved. The control modules listed below are part of the power inverter module and are not serviced separately:

- Auxiliary transmission fluid pump control module
- Drive motor control module 1
- Drive motor control module 2
- Hybrid powertrain control module 1

Conditions for Running the DTC

- The vehicle is ON.
- The system voltage is 8-18 V.

Conditions for Setting the DTC

P06B1, P06B4, or P06E7

The reference voltage is less than 12 V for 1 second.

P06B2, P06B5, or P06E8

The reference voltage is greater than 18 V for 1 second.

Action Taken When the DTC Sets

- DTCs P06B1, P06B2, P06B4, P06B5, P06E7, and P06E8 are Type A DTCs.
- The power inverter module requests the hybrid powertrain control module 2 to open the high voltage contactor relays.

Conditions for Clearing the DTC

DTCs P06B1, P06B2, P06B4, P06B5, P06E7, and P06E8 are Type A DTCs.

Diagnostic Aids

This DTC may set due to low 12 V system voltage.

Reference Information

DTC Type Reference

Powertrain Diagnostic Trouble Code (DTC) Type Definitions

Circuit/System Verification

If the DTC is set, program the T6 power inverter module. If the DTC resets, replace the T6 power inverter module.

Repair Instructions

Perform the Diagnostic Repair Verification after completing the diagnostic procedure.

Control Module References for Drive Motor Generator Power Inverter Module, also called the power inverter module, replacement, programming and set-up.

&#169© Copyright Chevrolet. All rights reserved

DTC P0A1B or P0A1C

Diagnostic Instructions

- Perform the Diagnostic System Check - Vehicle prior to using this diagnostic procedure.
- Review Strategy Based Diagnosis for an overview of the diagnostic approach.
- Diagnostic Procedure Instructions provides an overview of each diagnostic category.

DTC Descriptor

DTC P0A1B: Drive Motor 1 Control Module Performance

DTC P0A1C: Drive Motor 2 Control Module Performance

Circuit/System Description

This is a fault detection of the drive motor generator power inverter module's internal motor control modules. This fault is handled inside the drive motor generator power inverter module, no external circuits are involved. The motor control modules are part of the drive motor generator power inverter module and are not serviced separately.

Conditions for Running the DTC

- The ignition is ON.
- The system voltage is 8-18 V.

Conditions for Setting the DTC

The control module has detected an internal malfunction.

Action Taken When the DTC Sets

- DTCs P0A1B and P0A1C are Type A DTCs.
- The drive motor generator power inverter module commands the battery energy control module to open the high voltage contactor relays.

Conditions for Clearing the DTC

DTCs P0A1B and P0A1C are Type A DTCs.

Reference Information

DTC Type Reference

Powertrain Diagnostic Trouble Code (DTC) Type Definitions

Circuit/System Verification

If the DTC is set, program the T6 drive motor generator power inverter module.

If the DTC resets, replace the T6 drive motor generator power inverter module.

Repair Instructions

Perform the Diagnostic Repair Verification after completing the diagnostic procedure.

Control Module References for Drive Motor Generator Power Inverter Module replacement, set-up and programming.

&#169© Copyright Chevrolet. All rights reserved

DTC P0A2B-P0A2D or P0A31-P0A33

Diagnostic Instructions

- Perform the Diagnostic System Check - Vehicle prior to using this diagnostic procedure.
- Review Strategy Based Diagnosis for an overview of the diagnostic approach.
- Diagnostic Procedure Instructions provides an overview of each diagnostic category.

DTC Descriptors

DTC P0A2B: Drive Motor 1 Temperature Sensor Performance

DTC P0A2C: Drive Motor 1 Temperature Sensor Circuit Low Voltage

DTC P0A2D: Drive Motor 1 Temperature Sensor Circuit High Voltage

DTC P0A31: Drive Motor 2 Temperature Sensor Performance

DTC P0A32: Drive Motor 2 Temperature Sensor Circuit Low Voltage

DTC P0A33: Drive Motor 2 Temperature Sensor Circuit High Voltage

Diagnostic Fault Information

Circuit	Short to Ground	Open/High Resistance	Short to Voltage	Signal Performance
Motor Temperature Sensor Signal	P0A2C, P0A32	P0A2D, P0A33	P0A2D, P0A33	P0A2B, P0A31
Motor Temperature Sensor Low Reference	-	P0A2D, P0A33	-	P0A2B, P0A31

Typical Scan Tool Data

Drive Motor 1/2 Temperature

Circuit	Short to Ground	Open	Short to Voltage
Operating Conditions: Vehicle ON ***Parameter Normal Range:*** 0.29 V to 4.43 V			
Motor Temperature Signal	0.00 V	4.45 V	Sensor Damage Possible
Motor Temperature Sensor Low Reference	-	4.45 V	--

Circuit/System Description

The motor temperature sensor is a non-serviceable part of the power inverter module, often referred to as the drive motor generator assembly. The motor temperature sensor is a thermistor, or a resistor that changes value when the temperature changes. The sensor has a negative-temperature coefficient. This means that as the temperature increases, the resistance decreases, and as the temperature decreases, the resistance increases. The motor control module supplies a 5 V reference signal to the sensor and measures the voltage drop in the circuit. When the motor is cold, the sensor resistance is high and the motor control module detects high signal voltage. As the motor temperature increases, the resistance of the sensor decreases, which lowers the signal voltage.

Conditions for Running the DTC

P0A2B and P0A31

- DTC P0A2C-P0A2D, P0A32, P0A33, P0AEF or P0AF0 is not set.
- The Propulsion System Inactive time is greater than 6 hours, the Charge Off time is greater than 2 hours and the Thermal Conditioning Off time is greater than 2 hours.
- The transmission and power inverter module temperature is greater than -40°C (-40°F).
- The vehicle is ON or the power inverter module is awake.
- Drive motor temperature is greater than -20°C (-4°F).
- Transmission Fluid Temperature is valid.

P0A2C and P0A32

Vehicle is ON or the power inverter module is awake.

P0A2D and P0A33

Vehicle has been driven for at least 90 seconds.

Conditions for Setting the DTC

P0A2B and P0A31

The Motor temperature is more than 20°C (36°F) greater than the average of the Transmission Fluid Temperature and the power inverter module temperatures.

P0A2C and P0A32

Motor temperature sensor signal is greater than 184°C (363°F) for 3 seconds.

P0A2D and P0A33

Motor temperature sensor signal is less than -41°C (-42°F) when drive motor generator torque is greater than 20 N·m (15 lb ft) for 90 seconds.

Action Taken When the DTC Sets

DTCs P0A2B-P0A2D, P0A31-P0A33 are Type A DTCs.

Conditions for Clearing the DTC

DTCs P0A2B-P0A2D, P0A31-P0A33 are Type A DTCs.

Diagnostic Aids

- The motor temperature sensor can be damaged by excessive electric current. Test the sensor for an open condition whenever a short-circuit to voltage condition is observed.
- Test the X175 transmission 20-way connector for proper terminal contact whenever an open or high resistance circuit condition is observed.

Reference Information

Schematic Reference

Hybrid Controls Schematics

Connector End View Reference

Component Connector End Views

Description and Operation

Drive Motor Generator Power Inverter Module Description and Operation

Electrical Information Reference

- Circuit Testing
- Connector Repairs
- Testing for Intermittent Conditions and Poor Connections
- Wiring Repairs

DTC Type Reference

Powertrain Diagnostic Trouble Code (DTC) Type Definitions

Scan Tool Reference

Control Module References for scan tool information

Special Tools

DT-44152 Jumper Harness, 20 terminal

For equivalent regional tools, refer to Special Tools .

Circuit/System Verification

P0A2B and P0A31

1. Allow the vehicle to cool to ambient temperature by leaving the vehicle OFF and not connected to a charger for at least 6 hours.
2. Vehicle ON, observe Motor 1 temperature, Motor 2 temperature, Transmission Fluid Temperature and Power Inverter Module Temperature scan tool parameters. All temperature parameters should be within 28°C (50°F) of each other and ambient temperature.

P0A2C, P0A2D, P0A32, and P0A33

Vehicle ON, observe the motor control modules motor temperature scan tool parameter.

The motor temperature parameter should be between -41 and 184°C (-42 and 363°F).

Circuit/System Testing

1. Vehicle OFF, disconnect the transmission X175 20-way harness connector.

   Note: The vehicle must be ON to test the low reference circuit. Other DTCs will set with the X175 connector disconnected.

2. Connect *DT-44152* jumper harness to the vehicle harness side only.
3. Vehicle ON, test the jumper harness side for less than 8 ohms between the low reference circuit terminals listed below and earth for the appropriate drive motor generator:
   - Drive motor 1 low reference circuit terminal S
   - Drive motor 2 low reference circuit terminal H

   If greater than the specified range, test the low reference circuit for an open/high resistance. If the circuit tests normal, replace the T6 power inverter module.
4. Vehicle ON, verify the scan tool motor temperature sensor parameter is less than -41°C (-42°F).
   If more than the specified value, test the motor temperature sensor signal circuit for a short-circuit to earth. If the circuit tests normal, replace the T6 power inverter module.
5. Install a 3-amp fused jumper wire between the signal circuit terminal and the low reference circuit terminal listed below for the appropriate drive motor generator. Verify the scan tool motor temperature sensor parameter is greater than 184°C (363°F):
   - Drive motor 1 terminals K and S
   - Drive motor 2 terminals J and H

   Note: If a short-circuit to voltage is found, test the motor temperature sensor for an open circuit or physical damage.

   If less than the specified value, test the signal circuit for a short to voltage or an open/high resistance. If the circuit tests normal, replace the T6 power inverter module.
6. Vehicle OFF, connect the *DT-44152* jumper harness to the X175 transmission 20-way connector at the transmission. Measure and record the resistance between the sensor signal and low reference terminals. Compare the actual sensor and circuit resistance to the expected sensor resistance. Refer to Temperature Versus Resistance .
   If the resistance is near the expected value, test the transmission internal harness signal circuit for a short-circuit to earth. If the circuit tests normal, replace the M15 drive motor.
   If the resistance is not near the expected value, test the transmission internal harness signal and low reference circuits for an open or shorted together condition. If the circuits test normal, replace the M15 drive motor.

Repair Instructions

Perform the Diagnostic Repair Verification after completing the diagnostic procedure.

- Control Valve Body Cover Removal for Wiring Harness Extension Harness replacement
- Drive Motor Generator Rotor and Stator Removal - Unit A for Drive Motor 1 replacement
- Control Module References for Drive Motor Generator Power Inverter Module, also called the power inverter module, replacement, programming and set-up

&#169© Copyright Chevrolet. All rights reserved

DTC P0A2F

Diagnostic Instructions

- Perform the Diagnostic System Check - Vehicle prior to using this diagnostic procedure.
- Review Strategy Based Diagnosis for an overview of the diagnostic approach.
- Diagnostic Procedure Instructions provides an overview of each diagnostic category.

DTC Descriptor

DTC P0A2F: Drive Motor 1 High Temperature

Circuit/System Description

The transmission contains two electric motor generators. The drive motors are cooled by the transmission fluid. Hot fluid exits the drive motor housing and flows to the transmission cooler supply line. The supply line connects to the cooler. From the cooler, the fluid returns through the oil cooler return line and enters the lubrication circuits. The motor temperature sensor is part of the drive motor generator assembly and is not serviced separately.

Conditions for Running the DTC

DTC P0A2B is not set.

Conditions for Setting the DTC

The motor temperature sensor is greater than 200°C (392°F) for 3 seconds and has not fallen below 135°C (275°F).

Action Taken When the DTC Sets

- DTC P0A2F is a Type B DTC.
- The hybrid powertrain control module commands the engine into derate mode.
- Autostop is disabled.

Conditions for Clearing the DTC

DTC P0A2F is a Type B DTC.

Diagnostic Aids

- Ask about the customer's driving habits, trailer towing, etc.
- Ensure the engine cooling system is functioning normally.
- The hybrid powertrain control module will reduce drive motor generator torque at temperatures greater than 160°C (320°F). Drive motor generator torque is reduced to zero if the temperature reaches 190°C (374°F).

Reference Information

Description and Operation

Electronic Component Description

DTC Type Reference

Powertrain Diagnostic Trouble Code (DTC) Type Definitions

Scan Tool Reference

Control Module References for scan tool information

Circuit/System Verification

1. Verify that DTC P0A2C is not set.
   If DTC P0A2C is set, refer to DTC P0A2B-P0A2D or P0A31-P0A33 .
2. Vehicle ON, observe the scan tool ECM engine coolant temperature (ECT) and Transmission Fluid Temperature parameters in freeze frame data. The readings should be below 125°C (257°F).
   If the ECT was above 125°C (257°F) when the DTC set, go to Engine Overheating and correct that concern first.
3. Vehicle ON, observe the scan tool motor 1 temperature and motor 2 temperature parameters in freeze frame data. The reading should be above 200°C (392°F). If greater than the specified value, refer to Automatic Transmission Overheating . If the transmission tests normal, replace M15A drive motor 1 generator.

Repair Instructions

Perform the Diagnostic Repair Verification after completing the diagnostic procedure.

Drive Motor Generator Rotor and Stator Removal - Unit A for Drive Motor 1 replacement

&#169© Copyright Chevrolet. All rights reserved

DTC P0A35

Diagnostic Instructions

- Perform the Diagnostic System Check - Vehicle prior to using this diagnostic procedure.
- Review Strategy Based Diagnosis for an overview of the diagnostic approach.
- Diagnostic Procedure Instructions provides an overview of each diagnostic category.

DTC Descriptor

DTC P0A35: Drive Motor 2 High Temperature

Circuit/System Description

The transmission contains two electric drive motors and an auxiliary transmission fluid pump. The drive motor motors and auxiliary transmission fluid pump are cooled by the transmission fluid. Hot fluid exits the drive motor motors and auxiliary transmission fluid pump housing and flows to the transmission cooler supply line. The supply line connects to the cooler. From the cooler, the fluid returns through the oil cooler return line and enters the lubrication circuits. A non-serviceable motor temperature sensor is located in each drive motor assembly.

Conditions for Running the DTC

DTC P0A31 is not set.

Conditions for Setting the DTC

The motor temperature sensor is greater than 200°C (392°F) for 3 seconds, and has not fallen below 135°C (275°F).

Action Taken When the DTC Sets

- DTC P0A35 is a Type B DTC.
- The hybrid powertrain control module requests the hybrid powertrain control module 2 to open the high-voltage contactor relays.

Conditions for Clearing the DTC

DTC P0A35 is a Type B DTC.

Diagnostic Aids

- Ask about the customer's driving habits, trailer towing, etc.
- Ensure the engine cooling system is functioning normally.
- The hybrid powertrain control module will reduce drive motor torque at temperatures greater than 160°C (320°F). Drive motor generator torque is reduced to zero if the temperature reaches 190°C (374°F).

Reference Information

Description and Operation

Electronic Component Description

DTC Type Reference

Powertrain Diagnostic Trouble Code (DTC) Type Definitions

Scan Tool Reference

Control Module References for scan tool information

Circuit/System Verification

1. Verify that DTC P0A31 is not set.
   If DTC P0A31 is set, refer to DTC P0A2B-P0A2D or P0A31-P0A33 .
2. Vehicle ON, observe the scan tool ECM engine coolant temperature (ECT) parameter in freeze frame data. The reading should be below 125°C (257°F).
   If the ECT was above 125°C (257°F) when the DTC set, go to Engine Overheating and correct that concern first.
3. Vehicle ON, observe the scan tool motor 1 temperature and motor 2 temperature parameters in freeze frame data. The reading should be above 200°C (392°F). If greater than the specified value, go to Automatic Transmission Overheating . If transmission tests normal, replace M15B drive motor 2 generator.

Repair Instructions

Perform the Diagnostic Repair Verification after completing the diagnostic procedure.

Drive Motor Generator Rotor and Stator Removal - Unit B for Drive Motor 2 replacement

&#169© Copyright Chevrolet. All rights reserved

DTC P0A3F, P0A40, P0C52, P0C53, P0C5C, P0C5D or P1B03

Diagnostic Instructions

- Perform the Diagnostic System Check - Vehicle prior to using this diagnostic procedure.
- Review Strategy Based Diagnosis for an overview of the diagnostic approach.
- Diagnostic Procedure Instructions provides an overview of each diagnostic category.

DTC Descriptor

DTC P0A3F: Drive Motor 1 Position Sensor Circuit

DTC P0A40: Drive Motor 1 Position Sensor Performance

DTC P0C52: Drive Motor 1 Position Sensor Circuit 1 Low Voltage

DTC P0C53: Drive Motor 1 Position Sensor Circuit 1 High Voltage

DTC P0C5C: Drive Motor 1 Position Sensor Circuit 2 Low Voltage

DTC P0C5D: Drive Motor 1 Position Sensor Circuit 2 High Voltage

DTC P1B03: Drive Motor 1 Position Sensor Circuit Tracking Lost

Diagnostic Fault Information

Circuit	Short to Ground	Open/High Resistance	Short to Voltage	Signal Performance
Drive Motor 1 Position Sensor 1	P0C52	P0A3F	P0C53, P0A3F	P1B03, P0A40
Drive Motor 1 Position Sensor 2	P0C5C	P0A3F	P0C5D, P0A3F	P1B03, P0A40
Drive Motor 1 Position Sensor Excitation	P0A3F	P0A3F	P0A3F	P1B03, P0A40

Circuit/System Description

The drive motor position sensor is monitored by the motor control module. The motor control module monitors the angular position, speed and direction of the drive motor generator rotor based upon the signals of the resolver-type position sensor. The position sensor contains a drive coil, two driven coils and an irregular shaped metallic rotor. The metallic rotor is mechanically attached to the shaft of the drive motor generator. At vehicle ON, the motor control module outputs a 7 volt ac, 10 kHz excitation signal to the drive coil. The drive coil excitation signal creates a magnetic field surrounding the two driven coils and the irregular shaped rotor. The motor control module then monitors the two driven coil circuits for a return signal. The position of the irregular metallic rotor causes the magnetically-induced return signals of the driven coils to vary in size and shape. A comparison of the two driven coils signals allows the motor control module to determine the exact position, speed and direction of the drive motor generator rotor. The position sensor is a non-serviceable part of the drive motor.

Conditions for Running the DTC

The vehicle is ON.

Conditions for Setting the DTC

P0C52, P0C5C

Circuit voltage less than 0.5 V.

P0C53, P0C5D

Circuit voltage greater than 4.5 V.

P0A3F

Sin or Cos signal is less than 2.3 V.

P0A40

Sin or Cos signal is greater than 4 V.

P1B03

The motor control module cannot track the motor position based on the sensor signals.

Action Taken When the DTC Sets

- DTCs P0A3F, P0A40, P0C52, P0C53, P0C5C, P0C5D and P1B03 are Type A DTCs.
- The hybrid powertrain control module commands GFI State. The vehicle will continue to run in electric mode if there is sufficient hybrid battery SOC.

Conditions for Clearing the DTC

DTCs P0A3F, P0A40, P0C52, P0C53, P0C5C, P0C5D and P1B03 are Type A DTCs.

Diagnostic Aids

- The drive motor generator position sensor circuits operate at very low current. These circuits are susceptible to moisture intrusion, corrosion and terminal damage. Extreme care must be taken when probing terminals and manipulating harnesses. Poor terminal connections can result in intermittent operation.
- If the customer comments that the problem occurs only during moist environmental conditions: rain, snow, vehicle washing, etc., inspect the sensor wiring for signs of water intrusion. If the DTC is not current, clear all DTCs and simulate the effects of water intrusion by using the following procedure:
  1. Spray the suspected area with a 5 percent saltwater solution. To create a 5 percent saltwater solution, add 2 teaspoons (12 g) of salt to 8 fl oz (237 ml) of water.
  2. Test drive the vehicle at various speeds over various road surfaces such as bumps and turns.
  3. Rinse the area thoroughly when completed.
- The sensor circuit loops are a twisted pair with each pair covered in a foil shield. The shield circuits outside of the transmission are earthed to a stud on the drive motor generator power inverter module assembly.
- The drive motor generator position sensor harness circuits are shielded. Improperly earthed shield circuits may cause inaccurate sensor signals.

Reference Information

Schematic Reference

Hybrid Controls Schematics

Connector End View Reference

- Component Connector End Views
- Inline Harness Connector End Views

Electrical Information Reference

- Circuit Testing
- Connector Repairs
- Testing for Intermittent Conditions and Poor Connections
- Wiring Repairs

DTC Type Reference

Powertrain Diagnostic Trouble Code (DTC) Type Definitions

Scan Tool Reference

Control Module References for scan tool information

Special Tools

- *DT-44152* Jumper Harness
- *DT-48493* Jumper Harness

For equivalent regional tools, refer to Special Tools .

Circuit/System Testing

Note: You must perform the Component Testing before proceeding with Circuit/System Testing.

1. Vehicle OFF, disconnect the X175 harness connector at the transmission.
2. Install the *DT-44152* jumper harness to the vehicle harness side only.
3. Vehicle ON, test for 0.8-1.4 V between the terminals listed below and earth:
   - Terminal U
   - Terminal T
   - Terminal L
   - Terminal M

   If greater than the specified range, test the signal circuit for a short-circuit to voltage, short-circuit to earth or an open circuit/high resistance. If the circuit tests normal replace the T6 power inverter module.
4. Vehicle ON, test for 6.5-7.5 V between the terminals listed below and earth:
   - Terminal V
   - Terminal W

   If outside the specified range, test the signal circuits for a short-circuit to voltage, short-circuit to earth or an open-circuit/high resistance. If the circuits test normal replace the T6 power inverter module.

Component Testing

Note: If the transmission control wiring harness extension harness circuits fail the circuit tests, replace the transmission control wiring harness extension harness, do not repair.

1. Verify that DTCs P1AF0, P1AF2 P1B43, P1E1E, P1E22, P1B0B, or P1B0C are not set.
   If DTC is set, refer to Diagnostic Trouble Code (DTC) List - Vehicle
2. Vehicle OFF, disconnect the X175 harness connector at the transmission.

3. Install the *DT-48493* jumper harness to the transmission side only.
4. Test for 10-25 Ω between terminal V and terminal W.
   If not within the specified range, test the transmission control wiring harness extension harness circuits for a short-circuit to voltage, short-circuit to earth or an open-circuit/high resistance. If the circuits test normal, replace the M15A drive motor with a generator assembly.
5. Test for 20-40 Ω between the signal terminal U and the signal terminal T.
   If not within the specified range, test the transmission control wiring harness extension harness circuits for a short-circuit to voltage, short-circuit to earth or an open-circuit/high resistance. If the circuits test normal, replace the M15A drive motor with a generator assembly.
6. Test for 30-60 Ω between the signal terminal L and the signal terminal M.
   If not within the specified range, test the transmission control wiring harness extension harness circuits for a short-circuit to voltage, short-circuit to earth or an open-circuit/high resistance. If the circuits test normal, replace the M15A drive motor with a generator assembly.
7. Test for greater than 10,000 Ω between the terminals listed below and earth:
   - Terminal V
   - Terminal W
   - Terminal U
   - Terminal T
   - Terminal L
   - Terminal M

   If not within the specified range, test the transmission control wiring harness extension harness circuits for a short-circuit to voltage, short-circuit to earth or an open-circuit/high resistance. If the circuits test normal, replace the M15A drive motor with a generator assembly.
8. Test for infinite resistance between the terminals listed below:
   - Terminals V and U
   - Terminals V and L
   - Terminals U and L

   If not within the specified range, test the transmission control wiring harness extension harness circuits for a short-circuit to voltage, short-circuit to earth or an open circuit/high resistance. If the circuits test normal, replace the M15A drive motor with a generator assembly.
9. If the test is passed refer to Circuit/System Testing.

Repair Instructions

Perform the Diagnostic Repair Verification after completing the diagnostic procedure.

- Drive Motor Generator Rotor and Stator Removal - Unit A for Drive Motor 1 replacement
- Control Valve Body Cover Removal for Wiring Harness Extension Harness replacement
- Control Module References for Drive Motor Generator Power Inverter Module, also called the power inverter module, replacement, programming and set-up

&#169© Copyright Chevrolet. All rights reserved

DTC P0A45, P0A46, P0C57, P0C58, P0C61, P0C62 or P1B04

Diagnostic Instructions

- Perform the Diagnostic System Check - Vehicle prior to using this diagnostic procedure.
- Review Strategy Based Diagnosis for an overview of the diagnostic approach.
- Diagnostic Procedure Instructions provides an overview of each diagnostic category.

DTC Descriptor

DTC P0A45: Drive Motor 2 Position Sensor Circuit

DTC P0A46: Drive Motor 2 Position Sensor Performance

DTC P0C57: Drive Motor 2 Position Sensor Circuit 1 Low Voltage

DTC P0C58: Drive Motor 2 Position Sensor Circuit 1 High Voltage

DTC P0C61: Drive Motor 2 Position Sensor Circuit 2 Low Voltage

DTC P0C62: Drive Motor 2 Position Sensor Circuit 2 High Voltage

DTC P1B04: Drive Motor 2 Position Sensor Circuit Loss of Tracking

Diagnostic Fault Information

Circuit	Short to Ground	Open/High Resistance	Short to Voltage	Signal Performance
Drive Motor Generator 2 Position Sensor 1	P0A45, P0C57	P0A45	P0C58, P0A45	P1B04, P0A46
Drive Motor Generator 2 Position Sensor 2	P0A45, P0C61	P0A45	P0C62, P0A45	P1B04, P0A46
Drive Motor Generator 2 Position Sensor Excitation	P0A45	P0A45	P0A45	P1B04, P0A46

Circuit/System Description

The drive motor generator position sensor is monitored by the motor control module. The motor control module monitors the angular position, speed and direction of the drive motor generator rotor based upon the signals of the resolver-type position sensor. The position sensor contains a drive coil, two driven coils and an irregular shaped metallic rotor. The metallic rotor is mechanically attached to the shaft of the drive motor generator. At vehicle ON, the motor control module outputs a 7 volt ac, 10 kHz excitation signal to the drive coil. The drive coil excitation signal creates a magnetic field surrounding the two driven coils and the irregular shaped rotor. The motor control module then monitors the two driven coil circuits for a return signal. The position of the irregular metallic rotor causes the magnetically-induced return signals of the driven coils to vary in size and shape. A comparison of the two driven coils signals allows the motor control module to determine the exact position, speed and direction of the drive motor generator rotor. The position sensor is a non-serviceable part of the drive motor generator.

Conditions for Running the DTC

The vehicle is ON.

Conditions for Setting the DTC

P0C57 or P0C61

Circuit voltage less than 0.5 V.

P0C58 or P0C62

Circuit voltage greater than 4.5 V.

P0A45

The motor control module cannot determine the motor position based upon the sensor signals.

P0A46

The motor control module detects a degraded motor position sensor signal.

P1B04

The motor control module cannot track the motor position based on the sensor signals.

Action Taken When the DTC Sets

- DTCs P0A45, P0A46, P0C57, P0C58, P0C61, P0C62, and P1B04 are Type A DTCs.
- Motor control module 2 stops requesting power for drive motor 2.

Conditions for Clearing the DTC

DTCs P0A45, P0A46, P0C57, P0C58, P0C61, P0C62, and P1B04 are Type A DTCs.

Diagnostic Aids

- The drive motor generator position sensor circuits operate at very low current. These circuits are susceptible to moisture intrusion, corrosion and terminal damage. Extreme care must be taken when probing terminals and manipulating harnesses. Poor terminal connections can result in intermittent operation.
- If the customer comments that the problem occurs only during moist environmental conditions: rain, snow, vehicle washing, etc., inspect the sensor wiring for signs of water intrusion. If the DTC is not current, clear all DTCs and simulate the effects of water intrusion by using the following procedure:
  1. Spray the suspected area with a 5 percent saltwater solution. To create a 5 percent saltwater solution, add 2 teaspoons (12 g) of salt to 8 fl oz (237 ml) of water.
  2. Test drive the vehicle at various speeds over various road surfaces such as bumps and turns.
  3. Rinse the area thoroughly when completed.
- The sensor circuit loops are a twisted pair with each pair covered in a foil shield. The shield circuits outside of the transmission are earthed to a stud on the drive motor generator power inverter module assembly.
- The drive motor generator position sensor harness circuits are shielded. Improperly earthed shield circuits may cause inaccurate sensor signals.

Reference Information

Schematic Reference

Hybrid Controls Schematics

Connector End View Reference

- Component Connector End Views
- Inline Harness Connector End Views

Electrical Information Reference

- Circuit Testing
- Connector Repairs
- Testing for Intermittent Conditions and Poor Connections
- Wiring Repairs

DTC Type Reference

Powertrain Diagnostic Trouble Code (DTC) Type Definitions

Scan Tool Reference

Control Module References for scan tool information

Circuit/System Testing

Note: You must perform the Component Testing before proceeding with Circuit/System Testing.

1. Vehicle OFF, disconnect the X1 and X2 harness connectors at the transmission.
2. Vehicle ON, at the harness side test for 0.8-1.4 V between the terminals listed below and earth:
   - X1 Terminal 1
   - X1 Terminal 2
   - X1 Terminal 3
   - X1 Terminal 4

   If not within the specified range, test the signal circuits for a short-circuit to voltage, short-circuit to earth or an open-circuit/high resistance. If the circuits test normal replace the T6 power inverter module.
3. Vehicle ON, test for 6.5-7.5 V between the terminals listed below and earth:
   - X2 Terminal 1
   - X2 Terminal 2

   If outside the specified range, test the signal circuits for a short-cicuit to voltage, short-circuit to earth or an open-circuit/high resistance. If the circuits test normal replace the T6 power inverter module.

Component Testing

1. Verify that DTCs P1AF0, P1AF2 P1B43, P1E1E, P1E22 P1B0B, or P1B0C are not set.
   If DTC is set, refer to Diagnostic Trouble Code (DTC) List - Vehicle .
2. Vehicle OFF, disconnect the X2 harness connector at the transmission.
3. At the transmission side test for 10-25 Ω between terminal 1 and terminal 2.
   If not within the specified range, replace the M15B drive motor with a generator assembly.
4. Disconnect the X1 harness connector at the transmission.
5. Test for 30-60 Ω between the signal terminal 1 and the signal terminal 2.
   If not within the specified range, replace the M15B drive motor with a generator assembly.
6. Test for 20-40 Ω between the signal terminal 3 and the signal terminal 4.
   If not within the specified range, replace the M15B drive motor with a generator assembly.
7. Test for greater than 10,000 Ω between the terminals listed below and earth:
   - X1 Terminal 1
   - X1 Terminal 2

- X1 Terminal 3
- X1 Terminal 4
- X2 Terminal 1
- X2 Terminal 2

  If less than the specified value, replace the M15B drive motor with a generator assembly.

8. Test for infinite resistance between the terminals listed below:
   - X1 Terminals 1 and 3
   - X1 Terminal 1 and X2 Terminal 1
   - X1 Terminal 3 and X2 Terminal 1

     If less than the specified value, replace the M15B drive motor with a generator assembly.
9. If the test is passed refer to Circuit/System Testing.

Repair Instructions

Perform the Diagnostic Repair Verification after completing the diagnostic procedure.

- Drive Motor Generator Rotor and Stator Removal - Unit B for Drive Motor 2 replacement
- Control Valve Body Cover Removal for Wiring Harness Extension Harness replacement
- Control Module References for Drive Motor Generator Power Inverter Module Assembly, also called the power inverter module, replacement, programming, and set-up

&#169© Copyright Chevrolet. All rights reserved

DTC P0A78 or P0A79

Diagnostic Instructions

- Perform the Diagnostic System Check - Vehicle prior to using this diagnostic procedure.
- Review Strategy Based Diagnosis for an overview of the diagnostic approach.
- Diagnostic Procedure Instructions provides an overview of each diagnostic category.

DTC Descriptor

DTC P0A78: Drive Motor 1 Inverter Performance

DTC P0A79: Drive Motor 2 Inverter Performance

Circuit/System Description

The power inverter module, often referred to as the drive motor generator power inverter module, contains the two drive motor control modules. Each motor control module operates its respective drive motor generator based upon hybrid/EV powertrain control module commands. Each motor control module controls the speed, direction and output torque of its respective drive motor generator through the sequencing actuation of high-current switching transistors called insulated gate bipolar transistors. Each insulated gate bipolar transistor assembly is monitored for fault conditions. The motor control modules are part of the power inverter module and are not serviced separately.

Conditions for Running the DTC

The high voltage contactor relays are closed.

Conditions for Setting the DTC

The motor control module detects excessive current flow through the switched portion of the insulated gate bipolar transistor.

Action Taken When the DTC Sets

- DTCs P0A78 and P0A79 are Type A DTCs.

- The power inverter module requests hybrid powertrain control module 2 to open the high-voltage contactor relays.

Conditions for Clearing the DTC

DTCs P0A78 and P0A79 are Type A DTCs.

Reference Information

Schematic Reference

Hybrid Controls Schematics

Connector End View Reference

Component Connector End Views

Electrical Information Reference

- Circuit Testing
- Connector Repairs
- Testing for Intermittent Conditions and Poor Connections
- Wiring Repairs

DTC Type Reference

Powertrain Diagnostic Trouble Code (DTC) Type Definitions

Circuit/System Verification

If the DTC is set, clear DTC; Turn the vehicle OFF for 2 minutes. Turn vehicle ON, Operate vehicle within conditions for running and setting DTC. If the DTC resets, go to Circuit/System Testing.

Circuit/System Testing

> **Danger:** Always perform the High-Voltage Disabling procedure prior to servicing any High Voltage component or connection. Personal Protection Equipment (PPE) and proper procedures must be followed.
>
> The High-Voltage Disabling procedure will perform the following tasks:

- Identify how to disable high voltage.
- Identify how to test for the presence of high voltage.
- Identify conditions under which high voltage is always present and personal protection equipment (PPE) and proper procedures must be followed.

Failure to follow the procedures exactly as written may result in serious injury or death.

1. Perform the High Voltage Disabling procedure for servicing at the drive motor generator control module cable connections.
2. Remove the 3-phase cable assembly from the power inverter module distribution box. Refer to Drive Motor Generator Rotor and Stator Removal - Unit A or Drive Motor Generator Rotor and Stator Removal - Unit B .
3. Test for infinite resistance between the Phase Terminals listed below and earth for each phase of the appropriate M15 drive motor:

   Drive Motor 1

   - X5 terminal 3-phase U
   - X5 terminal 2-phase V
   - X5 terminal 1-phase W

   Drive Motor 2

   - X6 terminal 3-phase U
   - X6 terminal 2-phase V
   - X6 terminal 1-phase W

     If not the specified value, test the AC circuit for a short-circuit to earth or a short-circuit between the AC circuit terminals and the aluminium cable mounting block. If the circuit tests normal, replace the T6 power inverter module. If the DTC resets replace the M15 drive motor.

Repair Instructions

Perform the Diagnostic Repair Verification after completing the diagnostic procedure.

- Drive Motor Generator Rotor and Stator Removal - Unit A for Drive Motor 1 or Drive Motor 1 3-Phase Cable Assembly replacement
- Drive Motor Generator Rotor and Stator Removal - Unit B for Drive Motor 2 or Drive Motor 2 3-Phase Cable Assembly replacement
- Control Module References for power inverter module, often referred to as the Drive Motor Generator Power Inverter Module, replacement, programming and set-up.

&#169© Copyright Chevrolet. All rights reserved

DTC P0A89

Diagnostic Instructions

- Perform the Diagnostic System Check - Vehicle prior to using this diagnostic procedure.
- Review Strategy Based Diagnosis for an overview of the diagnostic approach.
- Diagnostic Procedure Instructions provides an overview of each diagnostic category.

DTC Descriptor

DTC P0A89: 14 Volt Power Module Current Sensor High Current

Circuit/System Description

The 14 V power module, also called the accessory DC power control module, monitors output current. This sensor is internal to the 14 V power module and is not serviced separately from the control module.

Conditions for Running the DTC

The vehicle is ON.

Conditions for Setting the DTC

The sensor signal is out of range for more than 5 seconds.

Action Taken When the DTC Sets

- The 14 V power module stops supplying power to the 12 V system.
- DTC P0A89 is a Type C DTC.

Conditions for Clearing the DTC

DTC P0A89 is a Type C DTC.

Reference Information

DTC Type Reference

Powertrain Diagnostic Trouble Code (DTC) Type Definitions

Circuit/System Verification

If the DTC is set, program the K1 14V power module. If the DTC resets, replace the K1 14 V power module.

Repair Instructions

Perform the Diagnostic Repair Verification after completing the diagnostic procedure.

Control Module References for Accessory DC Power Control Module, also called the 14 V Power Module, replacement, programming and set-up.

&#169© Copyright Chevrolet. All rights reserved

DTC P0A8D-P0A8F

Diagnostic Instructions

- Perform the Diagnostic System Check - Vehicle prior to using this diagnostic procedure.
- Review Strategy Based Diagnosis for an overview of the diagnostic approach.
- Diagnostic Procedure Instructions provides an overview of each diagnostic category.

DTC Descriptor

DTC P0A8D: 14 V Power Module System Voltage Low Voltage

DTC P0A8E: 14 V Power Module System Voltage High Voltage

DTC P0A8F: 14 V Power Module System Performance

Circuit/System Description

The 14 V power module, also referred to as the accessory DC power control module, constantly monitors system input and output voltage. This sensor is internal to the 14 V power module and is not serviced separately from the control module.

Conditions for Running the DTC

The vehicle is ON.

Conditions for Setting the DTC

DTC P0A8D, P0A8E or P0A8F: the sensor signal is out of range for greater than 5 seconds.

Action Taken When the DTC Sets

- The 14 V power module stops supplying power to the 12 V system.

- DTCs P0A8D, P0A8E or P0A8F are Type C DTCs.

Conditions for Clearing the DTC

DTCs P0A8D, P0A8E or P0A8F are Type C DTCs.

Diagnostic Aids

This DTC may set due to low 12 V system voltage.

Reference Information

DTC Type Reference

Powertrain Diagnostic Trouble Code (DTC) Type Definitions

Circuit/System Verification

If the DTC is set, program the K1 14V power module. If the DTC resets, replace the K1 14 V power module.

Repair Instructions

Perform the Diagnostic Repair Verification after completing the diagnostic procedure.

Control Module References for Accessory DC Power Control Module, also called the 14 V power module, replacement, programming and set-up.

&#169© Copyright Chevrolet. All rights reserved

DTC P0AB9

Diagnostic Instructions

- Perform the Diagnostic System Check - Vehicle prior to using this diagnostic procedure.
- Review Strategy Based Diagnosis for an overview of the diagnostic approach.
- Diagnostic Procedure Instructions provides an overview of each diagnostic category.

DTC Descriptor

DTC P0AB9: Hybrid/EV System Performance

Circuit/System Description

This vehicle does not use a 12 V starter motor to crank the internal combustion engine. A much more powerful 300 V drive motor 1 located within the transmission is utilised to crank the engine. The 300 V drive motor 1 can rotate the engine to operating speed (800 RPM) within just a few hundred milliseconds. The hybrid powertrain control module can detect a condition where the engine is cranking but does not start or has stalled.

Conditions for Running the DTC

Drive motor 1 is cranking the engine.

Conditions for Setting the DTC

The hybrid powertrain control module detects that crankshaft position sensor engine speed has not risen above the commanded cranking speed, indicating the engine has failed to start, or the hybrid powertrain control module detects crankshaft position sensor engine speed has fallen below a specific minimum speed indicating the engine has stalled.

Action Taken When the DTC Sets

DTC P0AB9 is a Type A DTC.

Cranks But Does Not Start

When the system orders engine Crank, the hybrid powertrain control module will command drive motor generator 1 to rotate the engine. The drive motor will continue to rotate the engine at a specific RPM until the engine starts and causes increased engine RPM. The hybrid powertrain control module will cease engine rotation if an increase in engine RPM is not observed after several seconds. This function may have the appearance of a start/stall condition.

Engine Stall

If stalling occurs after a successful engine start, the hybrid powertrain control module will recognize the drop in engine RPM and command drive motor generator 1 to maintain engine RPM in an attempt to restart the engine. Drive motor generator 1 will continue to rotate the engine until the hybrid powertrain control module commands it to stop. The engine may be rotated for many minutes after the actual engine stall condition occurred and is typically stopped only after the hybrid battery state of charge gets too low. This function may have the appearance of a running engine.

Conditions for Clearing the DTC

DTC P0AB9 is a Type A DTC.

Diagnostic Aids

Any condition that causes the engine to stall and/or not start may set this DTC. Possible conditions include:

- Fuel conditions such as low level, low pressure or contamination.
- Engine conditions such as low compression.
- Restricted exhaust or air intake systems.

Always inspect for DTCs that would cause an engine stall and/or no start condition.

This DTC may set if the vehicle is powered off while driving.

Circuit/System Verification

1. Vehicle ON. Operate the hood release to open the hood. The engine should start and run.
   If the engine fails to start, diagnose the engine system. Refer to Engine Cranks But Does Not Run .
2. If the engine starts, the problem is intermittent and not present at this time.
3. DTC is set, and the engine is running, program the T6 power inverter module.
   If the DTC resets, replace the T6 power inverter module.

Repair Instructions

Perform the Diagnostic Repair Verification after completing the diagnostic procedure.

Control Module References for Drive Motor Generator Power Inverter Module, also called the power inverter module, replacement, programming and set-up.

&#169© Copyright Chevrolet. All rights reserved

DTC P0AEE, P0AEF, P0AF0, P0AF3-P0AF5, P0BD2-P0BD4, P0BD7-P0BD9, P0BDC-P0BDE, or P0BE1-P0BE3

Diagnostic Instructions

- Perform the Diagnostic System Check - Vehicle prior to using this diagnostic procedure.
- Review Strategy Based Diagnosis for an overview of the diagnostic approach.
- Diagnostic Procedure Instructions provides an overview of each diagnostic category.

DTC Descriptor

DTC P0AEE: Drive Motor Inverter Temperature Sensor 1 Performance

DTC P0AEF: Drive Motor Inverter Temperature Sensor 1 Circuit Low Voltage

DTC P0AF0: Drive Motor Inverter Temperature Sensor 1 Circuit High Voltage

DTC P0AF3: Drive Motor Inverter Temperature Sensor 2 Performance

DTC P0AF4: Drive Motor Inverter Temperature Sensor 2 Circuit Low Voltage

DTC P0AF5: Drive Motor Inverter Temperature Sensor 2 Circuit High Voltage

DTC P0BD2: Drive Motor Inverter Temperature Sensor 3 Performance

DTC P0BD3: Drive Motor Inverter Temperature Sensor 3 Circuit Low Voltage

DTC P0BD4: Drive Motor Inverter Temperature Sensor 3 Circuit High Voltage

DTC P0BD7: Drive Motor Inverter Temperature Sensor 4 Performance

DTC P0BD8: Drive Motor Inverter Temperature Sensor 4 Circuit Low Voltage

DTC P0BD9: Drive Motor Inverter Temperature Sensor 4 Circuit High Voltage

DTC P0BDC: Drive Motor Inverter Temperature Sensor 5 Performance

DTC P0BDD: Drive Motor Inverter Temperature Sensor 5 Circuit Low Voltage

DTC P0BDE: Drive Motor Inverter Temperature Sensor 5 Circuit High Voltage

DTC P0BE1: Drive Motor Inverter Temperature Sensor 6 Performance

DTC P0BE2: Drive Motor Inverter Temperature Sensor 6 Circuit Low Voltage

DTC P0BE3: Drive Motor Inverter Temperature Sensor 6 Circuit High Voltage

Circuit/System Description

This is an internal fault detection of the drive motor generator power inverter module. This fault is handled inside the drive motor generator power inverter module and no external circuits are involved.

Conditions for Running the DTC

P0AEE, P0AF3, P0BD2, P0BD7, P0BDC and P0BE1

- Ignition ON after the ignition has been OFF for 6 hours.
- Temperature average of the inverter phase temperature sensors is greater than 12°C (10°F).
- Motor temperature sensor is above -40°C (-40°F).
- DTCs P0AEF, P0AF0, P0BD3, P0BD4, P0BDD, P0BDE, P0A2C, and P0A2D are not set.

P0AEF, P0AF4, P0BD3, P0BD8, P0BDD and P0BE2

The ignition is ON.

P0AF0, P0AF5, P0BD4, P0BD9, P0BDE and P0BE3

- The ignition is ON.
- Motor temperature is above -40°C (-40°F). If motor temperature is less than -40°C (-40°F) with Ignition ON, the drive motor must operate at greater than 20 N·m (14.75 lb ft) for a cumulative time of 1.5 minutes before the DTC will run.

Conditions for Setting the DTC

P0AEE, P0AF3, P0BD2, P0BD7, P0BDC and P0BE1

- A 15°C (27°F) difference is observed between the individual inverter phase temperature sensor and the average of all the inverter phase temperatures.
- The above condition is present for 4 seconds.

P0AEF, P0AF4, P0BD3, P0BD8, P0BDD and P0BE2

The inverter phase temperature sensor is greater than 125°C (275°F) for 3 seconds.

P0AF0, P0AF5, P0BD4, P0BD9, P0BDE and P0BE3

The inverter phase temperature sensor is less than -40°C (-40°F) for 3 seconds.

Action Taken When the DTC Sets

- DTCs P0AEE, P0AEF, P0AF0, P0AF3, P0AF4, P0AF5, P0BD2, P0BD3, P0BD4, P0BD7, P0BD8, P0BD9, P0BDC, P0BDD, P0BDE, P0BE1, P0BE2 AND P0BE3 are Type B DTCs.
- The drive motor generator power inverter module commands the battery energy control module to open the high voltage contactor relays.

Conditions for Clearing the DTC

DTCs P0AEE, P0AEF, P0AF0, P0AF3, P0AF4, P0AF5, P0BD2, P0BD3, P0BD4, P0BD7, P0BD8, P0BD9, P0BDC, P0BDD, P0BDE, P0BE1, P0BE2 AND P0BE3 are Type B DTCs.

Reference Information

DTC Type Reference

Powertrain Diagnostic Trouble Code (DTC) Type Definitions

Circuit/System Verification

If the DTC is set, program the T6 drive motor generator power inverter module. If the DTC resets, replace the T6 drive motor generator power inverter module.

Repair Instructions

Perform the Diagnostic Repair Verification after completing the diagnostic procedure.

Control Module References for Drive Motor Generator Power Inverter Module replacement, set-up and programming.

&#169© Copyright Chevrolet. All rights reserved

DTC P0B0D

Diagnostic Instructions

- Perform the Diagnostic System Check - Vehicle prior to using this diagnostic procedure.
- Review Strategy Based Diagnosis for an overview of the diagnostic approach.
- Diagnostic Procedure Instructions provides an overview of each diagnostic category.

DTC Descriptor

DTC P0B0D: Auxiliary Transmission Fluid Pump Motor Control Module Performance

Circuit/System Description

This is a fault detection of the auxiliary transmission fluid pump motor control module. This control module is part of the power inverter module, often referred to as the drive motor generator power inverter module, and is not serviced separately. This fault is handled inside the power inverter module, no external circuits are involved.

Conditions for Running the DTC

- The vehicle is ON.
- The system voltage is greater than 9.5 V.

Conditions for Setting the DTC

The control module has detected an internal malfunction.

Action Taken When the DTC Sets

- DTC P0B0D is a Type A DTC.
- The power inverter module requests the hybrid powertrain control module 2 to open the high voltage contactor relays.

Conditions for Clearing the DTC

DTC P0B0D is a Type A DTC.

Reference Information

DTC Type Reference

Powertrain Diagnostic Trouble Code (DTC) Type Definitions

Circuit/System Verification

If the DTC is set, program the T6 power inverter module.

If the DTC resets, replace the T6 power inverter module.

Repair Instructions

Perform the Diagnostic Repair Verification after completing the diagnostic procedure.

Control Module References for Drive Motor Generator Power Inverter Module, also called the power inverter module, replacement, programming and set-up.

&#169© Copyright Chevrolet. All rights reserved

DTC P0BE6-P0BE8, P0BEA-P0BEC, P0BEE, P0BEF, P0BF0, P0BF2-P0BF4, P0BF6-P0BF8 or P0BFA-P0BFC

Diagnostic Instructions

- Perform the Diagnostic System Check - Vehicle prior to using this diagnostic procedure.
- Review Strategy Based Diagnosis for an overview of the diagnostic approach.
- Diagnostic Procedure Instructions provides an overview of each diagnostic category.

DTC Descriptor

DTC P0BE6: Drive Motor 1 Phase U Current Sensor Performance

DTC P0BE7: Drive Motor 1 Phase U Current Sensor Circuit Low Voltage

DTC P0BE8: Drive Motor 1 Phase U Current Sensor Circuit High Voltage

DTC P0BEA: Drive Motor 1 Phase V Current Sensor Performance

DTC P0BEB: Drive Motor 1 Phase V Current Sensor Circuit Low Voltage

DTC P0BEC: Drive Motor 1 Phase V Current Sensor Circuit High Voltage

DTC P0BEE: Drive Motor 1 Phase W Current Sensor Performance

DTC P0BEF: Drive Motor 1 Phase W Current Sensor Circuit Low Voltage

DTC P0BF0: Drive Motor 1 Phase W Current Sensor Circuit High Voltage

DTC P0BF2: Drive Motor 2 Phase U Current Sensor Performance

DTC P0BF3: Drive Motor 2 Phase U Current Sensor Circuit Low Voltage

DTC P0BF4: Drive Motor 2 Phase U Current Sensor Circuit High Voltage

DTC P0BF6: Drive Motor 2 Phase V Current Sensor Performance

DTC P0BF7: Drive Motor 2 Phase V Current Sensor Circuit Low Voltage

DTC P0BF8: Drive Motor 2 Phase V Current Sensor Circuit High Voltage

DTC P0BFA: Drive Motor 2 Phase W Current Sensor Performance

DTC P0BFB: Drive Motor 2 Phase W Current Sensor Circuit Low Voltage

DTC P0BFC: Drive Motor 2 Phase W Current Sensor Circuit High Voltage

Circuit/System Description

This is an internal fault detection of the drive motor generator power inverter module. This fault is handled inside the drive motor generator power inverter module and no external circuits are involved.

Conditions for Running the DTC

The control module runs the program to detect an internal fault when the Hybrid wake-up circuit is active.

Conditions for Setting the DTC

The control module has detected an internal malfunction.

Action Taken When the DTC Sets

- DTCs P0BE6, P0BE7, P0BE8, P0BEA, P0BEB, P0BEC, P0BEE, P0BEF, P0BF0, P0BF2, P0BF3, P0BF4, P0BF6, P0BF7, P0BF8, P0BFA, P0BFB and P0BFC are Type B DTCs.
- The drive motor generator power inverter module commands the battery energy control module to open the high voltage contactor relays.

Conditions for Clearing the DTC

DTCs P0BE6, P0BE7, P0BE8, P0BEA, P0BEB, P0BEC, P0BEE, P0BEF, P0BF0, P0BF2, P0BF3, P0BF4, P0BF6, P0BF7, P0BF8, P0BFA, P0BFB and P0BFC are Type B DTCs.

Reference Information

DTC Type Reference

Powertrain Diagnostic Trouble Code (DTC) Type Definitions

Circuit/System Verification

If the DTC is set, program the T6 drive motor generator power inverter module. If the DTC resets, replace the T6 drive motor generator power inverter module.

Repair Instructions

Perform the Diagnostic Repair Verification after completing the diagnostic procedure.

Control Module References for Drive Motor Generator Power Inverter Module replacement, set-up and programming.

&#169© Copyright Chevrolet. All rights reserved

DTC P0BFD or P0BFE

Diagnostic Instructions

- Perform the Diagnostic System Check - Vehicle prior to using this diagnostic procedure.
- Review Strategy Based Diagnosis for an overview of the diagnostic approach.
- Diagnostic Procedure Instructions provides an overview of each diagnostic category.

DTC Descriptor

DTC P0BFD: Drive Motor 1 Phase U-V-W Correlation

DTC P0BFE: Drive Motor 2 Phase U-V-W Correlation

Circuit/System Description

The power inverter module, often referred to as the drive motor generator power inverter module, contains the motor control modules and the hybrid powertrain control module. Each motor control module operates its respective drive motor based upon hybrid powertrain control module commands. Each motor control module controls the speed, direction and output torque of its respective drive motor generator through the sequencing actuation of high-current switching transistors called insulated gate bipolar transistors. Each drive motor generator operates utilising 3-phase alternating current AC electricity. Each insulated gate bipolar transistor operates a single phase of the drive motor generator. Each phase is individually identified as U, V and W. Each motor control module monitors the current of each phase in order to detect power inverter module over-current conditions.

Because all the motor generator phase circuits are electrically joined together, they should each flow about the same amount of current. The motor control modules perform a mathematical calculation to verify that the phase current sensors are accurate. If the U-V-W phase current sensors indicate about the same amount of phase current, the sum of the calculation should be near zero. If the U-V-W phase currents are not similar, this DTC will set.

Conditions for Running the DTC

- The vehicle is ON.
- The high voltage contactor relays are closed.

Conditions for Setting the DTC

The sum of the 3-phase current sensors is greater than 156 A.

Action Taken When the DTC Sets

- DTCs P0BFD and P0BFE are Type A DTCs.
- The power inverter module requests the hybrid powertrain control module 2 to open the high voltage contactor relays.

Conditions for Clearing the DTC

DTCs P0BFD and P0BFE are Type A DTCs.

Reference Information

Schematic Reference

Hybrid Controls Schematics

Electrical Information Reference

- Circuit Testing
- Connector Repairs
- Testing for Intermittent Conditions and Poor Connections
- Wiring Repairs

DTC Type Reference

Powertrain Diagnostic Trouble Code (DTC) Type Definitions

Circuit/System Verification

If the DTC is set, clear DTC; Turn the vehicle OFF for 2 minutes. Turn vehicle ON, Operate vehicle within conditions for running and setting DTC. If the DTC resets, go to Circuit/System Testing.

Circuit/System Testing

> **Danger:** Always perform the High-Voltage Disabling procedure prior to servicing any High Voltage component or connection. Personal Protection Equipment (PPE) and proper procedures must be followed.

The High-Voltage Disabling procedure will perform the following tasks:

- Identify how to disable high voltage.
- Identify how to test for the presence of high voltage.
- Identify conditions under which high voltage is always present and personal protection equipment (PPE) and proper procedures must be followed.

Failure to follow the procedures exactly as written may result in serious injury or death.

1. Perform the High Voltage Disabling procedure for servicing at the power inverter control module cable connections.
2. Remove the 3-phase cable assembly from the T6 power inverter module distribution box. Refer to Drive Motor Generator Rotor and Stator Removal - Unit A and Drive Motor Generator Rotor and Stator Removal - Unit B .
3. Test for infinite resistance between each of the AC circuit terminals listed below and earth:
   - X5 drive motor 1 phase U terminal
   - X5 drive motor 1 phase V terminal
   - X5 drive motor 1 phase W terminal
   - X6 drive motor 2 phase U terminal
   - X6 drive motor 2 phase V terminal
   - X6 drive motor 2 phase W terminal

   If not the specified value and the engine was running then stalled when the DTC set, test the AC circuit for a short-circuit to earth or a short-circuit between the AC circuit terminals and the aluminium cable mounting block. If the circuit tests normal, replace the appropriate M15 drive motor. If the DTC resets replace the T6 power inverter module.

   If not the specified value, and the engine would not crank when the DTC set, test the AC circuit for a short-circuit to earth or a short-circuit between the AC circuit terminals and the aluminium cable mounting block. If the circuit tests normal, replace the T6 power inverter module. If the DTC resets replace the M15 drive motor.

Repair Instructions

Perform the Diagnostic Repair Verification after completing the diagnostic procedure.

- Drive Motor Generator Rotor and Stator Removal - Unit A for Drive Motor 1, 3-Phase Cable Assembly replacement
- Drive Motor Generator Rotor and Stator Removal - Unit B for Drive Motor 2, 3-Phase Cable Assembly replacement
- Drive Motor Generator Rotor and Stator Removal - Unit A
- Drive Motor Generator Rotor and Stator Removal - Unit B
- Control Module References for Drive Motor Generator Power Inverter Module, also called the power inverter module, replacement, programming and set-up.

&#169© Copyright Chevrolet. All rights reserved

DTC P0C01 or P0C04

Diagnostic Instructions

- Perform the Diagnostic System Check - Vehicle prior to using this diagnostic procedure.
- Review Strategy Based Diagnosis for an overview of the diagnostic approach.
- Diagnostic Procedure Instructions provides an overview of each diagnostic category.

DTC Descriptor

DTC P0C01: Drive Motor 1 High Current

DTC P0C04: Drive Motor 2 High Current

Circuit/System Description

The power inverter module, often referred to as the drive motor generator power inverter module, contains two motor control modules and the hybrid powertrain control module. Each motor control module operates its respective drive motor generator based upon power inverter module commands. Each motor control modules controls the speed, direction and output torque of its respective drive motor generator through the sequencing actuation of high-current switching transistors called insulated gate bipolar transistors. Each drive motor generator operates utilising 3-phase AC electricity. Each insulated gate bipolar transistor operates a single phase of the drive motor generator. Each phase is individually identified as U, V and W. Each motor control module monitors the current of each phase in order to detect power inverter module over-current conditions. The motor control modules are part of the power inverter module and are not serviced separately.

Conditions for Running the DTC

The hybrid wake-up circuit is active.

Conditions for Setting the DTC

One or more phase currents are greater than 725 A.

Action Taken When the DTC Sets

- DTCs P0C01 and P0C04 are Type A DTCs.
- The power inverter module requests the hybrid powertrain control module 2 to open the high voltage contactor relays.

Conditions for Clearing the DTC

DTCs P0C01 and P0C04 are Type A DTCs.

Reference Information

Schematic Reference

Hybrid Controls Schematics

Electrical Information Reference

- Circuit Testing
- Connector Repairs
- Testing for Intermittent Conditions and Poor Connections
- Wiring Repairs

DTC Type Reference

Powertrain Diagnostic Trouble Code (DTC) Type Definitions

Circuit/System Verification

If the DTC is set, clear DTC; Turn the vehicle OFF for 2 minutes. Turn vehicle ON, Operate vehicle within conditions for running and setting DTC. If the DTC resets, go to Circuit/System Testing.

Circuit/System Testing

> **Danger:** Always perform the High-Voltage Disabling procedure prior to servicing any High Voltage component or connection. Personal Protection Equipment (PPE) and proper procedures must be followed.
>
> The High-Voltage Disabling procedure will perform the following tasks:
>
> - Identify how to disable high voltage.
> - Identify how to test for the presence of high voltage.
> - Identify conditions under which high voltage is always present and personal protection equipment (PPE) and proper procedures must be followed.

Failure to follow the procedures exactly as written may result in serious injury or death.

1. Perform the High Voltage Disabling .
2. Vehicle OFF, disconnect the appropriate 3-phase cable assembly from the T6 power inverter module listed below. Refer to Hybrid Controls Electronic Component Views Figure 2: High Voltage Terminal Locator.

   Drive Motor 1

   - X5 phase U terminal 3
   - X5 phase V terminal 2
   - X5 phase W terminal 1

   Drive Motor 2

   - X6 phase U terminal 3
   - X6 phase V terminal 2
   - X6 phase W terminal 1
3. Test for infinite resistance to circuit terminals listed below and earth:

   Drive Motor 1

   - X5 phase U terminal 3
   - X5 phase V terminal 2
   - X5 phase W terminal 1

   Drive Motor 2

   - X6 phase U terminal 3
   - X6 phase V terminal 2
   - X6 phase W terminal 1

   If disconnect the 3-phase cable assembly from the T12 automatic transmission assembly. Refer to Drive Motor Generator Rotor and Stator Removal - Unit A and Drive Motor Generator Rotor and Stator Removal - Unit B . Ensure the terminals are not contacting chassis earth. Test the circuits for a short-circuit to earth. If the circuits test normal, replace the M15 drive motor.
4. Replace the T6 power inverter module.

Repair Instructions

Perform the Diagnostic Repair Verification after completing the diagnostic procedure.

- Drive Motor Generator Rotor and Stator Removal - Unit A for Drive Motor 1, 3-Phase Cable Assembly replacement
- Drive Motor Generator Rotor and Stator Removal - Unit B for Drive Motor 2, 3-Phase Cable Assembly replacement
- Control Module References for Drive Motor Generator Power Inverter Module, also called the power inverter module, replacement, programming and set-up.

&#169© Copyright Chevrolet. All rights reserved

DTC P0C05 or P0C08

Diagnostic Instructions

- Perform the Diagnostic System Check - Vehicle prior to using this diagnostic procedure.
- Review Strategy Based Diagnosis for an overview of the diagnostic approach.
- Diagnostic Procedure Instructions provides an overview of each diagnostic category.

DTC Descriptor

DTC P0C05: Drive Motor 1 Phase U-V-W Circuits

DTC P0C08: Drive Motor 2 Phase U-V-W Circuits

Circuit/System Description

Each drive motor is controlled by a motor control module. The drive motor utilises 3-phase AC electricity. The drive motor stator coil is comprised of three phase circuits. The phase circuits are identified as phase U, phase V and phase W. The U-V-W phase circuits are connected in a wye configuration. This means each phase is connected at a single, central point. The motor control modules monitor a current sensor connected to each drive motor generator phase. The current sensor is part of the drive motor assembly and is not serviced separately. The motor control module is part of the power inverter module, often referred to as the drive motor generator power inverter module, and is not serviced separately.

Conditions for Running the DTC

- The Hybrid Wake-up circuit is active.
- Inverter voltage is greater than 35 V.
- The motor control module has applied greater than or equal to 23A to the drive motor.

Conditions for Setting the DTC

The motor control module detects at least one U-V-W phase current sensor is less than 9 A.

Action Taken When the DTC Sets

- DTCs P0C05 and P0C08 are Type A DTCs.
- Propulsion will be disabled.

Conditions for Clearing the DTC

DTCs P0C05 and P0C08 are Type A DTCs.

Reference Information

Schematic Reference

Hybrid Controls Schematics

Electrical Information Reference

- Circuit Testing
- Connector Repairs
- Testing for Intermittent Conditions and Poor Connections
- Wiring Repairs

DTC Type Reference

Powertrain Diagnostic Trouble Code (DTC) Type Definitions

Circuit/System Testing

> **Danger:** Always perform the High-Voltage Disabling procedure prior to servicing any High Voltage component or connection. Personal Protection Equipment (PPE) and proper procedures must be followed.
>
> The High-Voltage Disabling procedure will perform the following tasks:
>
> - Identify how to disable high voltage.
> - Identify how to test for the presence of high voltage.
> - Identify conditions under which high voltage is always present and personal protection equipment (PPE) and proper procedures must be followed.
>
> Failure to follow the procedures exactly as written may result in serious injury or death.

1. Perform the High Voltage Disabling procedure for servicing at the T6 power inverter module cable connections.

2. Remove the 3-phase cable assembly from the power inverter module distribution box. Refer to Hybrid Controls Electronic Component Views Figure 2: High Voltage Terminal Locator.
3. Test for less than 0.5 ohms at each phase by measuring between the following circuits with a DMM:
   - Phase U and phase V
   - Phase U and phase W

   If not the specified value, inspect the 3 phase cable terminal fasteners at the Drive Motor Generator Rotor for the proper torque and for arc-flash damage. Refer to Drive Motor Generator Rotor and Stator Removal - Unit A and Drive Motor Generator Rotor and Stator Removal - Unit B .

   If any fasteners were loose and no arc-flash damage is present, torque the fasteners and re-assemble the vehicle. Retest for the DTC.

   If any fasteners were loose and arc-flash damage is present, replace the drive motor generator assembly and the 3 phase cable assembly.

   Disconnect the 3 phase cable assembly from the transmission. Refer to Drive Motor Generator Rotor and Stator Removal - Unit A and Drive Motor Generator Rotor and Stator Removal - Unit B .

   Test each cable for continuity from the PIM connection terminal to the transmission connection terminal.

   If you measure greater than 0.5 ohms, replace the 3 phase cable assembly.

   Replace the drive motor generator assembly and retest for the DTC. If the DTC resets, replace the PIM.

Repair Instructions

Perform the Diagnostic Repair Verification after completing the diagnostic procedure.

- Drive Motor Generator Rotor and Stator Removal - Unit A for Drive Motor 1, 3-Phase Cable Assembly replacement
- Drive Motor Generator Rotor and Stator Removal - Unit B for Drive Motor 2, 3-Phase Cable Assembly replacement
- Control Module References for Drive Motor Generator Power Inverter Module, also called the power inverter module, replacement, programming and set-up.

&#169© Copyright Chevrolet. All rights reserved

DTC P0C0B or P0C0E

Diagnostic Instructions

- Perform the Diagnostic System Check - Vehicle prior to using this diagnostic procedure.
- Review Strategy Based Diagnosis for an overview of the diagnostic approach.
- Diagnostic Procedure Instructions provides an overview of each diagnostic category.

DTC Descriptor

DTC P0C0B: Drive Motor 1 Inverter Supply Voltage Circuit

DTC P0C0E: Drive Motor 2 Inverter Supply Voltage Circuit

Circuit/System Description

This is an internal fault detection of the power inverter module. This fault is handled inside the power inverter module and no external circuits are involved.

Conditions for Running the DTC

- Vehicle is ON or Charge Mode is active.
- High voltage is greater than 100 V.

Conditions for Setting the DTC

The control module does not detect voltage at the insulated gate bipolar transistor bias supply.

Action Taken When the DTC Sets

- DTCs P0C0B and P0C0E are Type A DTCs.
- Propulsion will be disabled.

Conditions for Clearing the DTC

DTCs P0C0B and P0C0E are Type A DTCs.

Reference Information

DTC Type Reference

Powertrain Diagnostic Trouble Code (DTC) Type Definitions

Circuit/System Verification

If the DTC is set, program the T6 power inverter module. If the DTC resets, replace the T6 power inverter module.

Repair Instructions

Perform the Diagnostic Repair Verification after completing the diagnostic procedure.

Control Module References for Drive Motor Generator Power Inverter Module, also called the power inverter module, replacement, programming and set-up.

&#169© Copyright Chevrolet. All rights reserved

DTC P0C17 or P0C18

Diagnostic Instructions

- Perform the Diagnostic System Check - Vehicle prior to using this diagnostic procedure.
- Review Strategy Based Diagnosis for an overview of the diagnostic approach.
- Diagnostic Procedure Instructions provides an overview of each diagnostic category.

DTC Descriptors

DTC P0C17: Drive Motor 1 Position Not Learned

DTC P0C18: Drive Motor 2 Position Not Learned

Circuit/System Description

The drive motor position sensor is monitored by the motor control module. The motor control module monitors the angular position, speed and direction of the drive motor generator based upon the signals of the resolver-type position sensor. The position sensor or resolver, contains a drive coil, two driven coils and an irregular shaped metallic rotor. The metallic rotor is mechanically attached to the shaft of the drive motor generator. At vehicle ON, the motor control module outputs a 7 V alternating current, 10 kHz excitation signal to the drive coil. The drive coil excitation signal creates a magnetic field surrounding the two driven coils and the irregular shaped rotor. The motor control module then monitors the two driven coil circuits for a return signal. The position of the irregular shaped metallic rotor causes the magnetically-induced return signals of the driven coils to vary in size and shape. A comparison of the two driven coil signals allows the motor control module to determine the exact position, speed and direction of the drive motor generator.

Offset is the relationship between the position sensor and the drive motor generator output shaft. Whenever the vehicle is cycled to OFF, the motor control module attempts to learn the offset of the drive motor position sensor. The motor control module will attempt to learn the position at hybrid wake-up, vehicle ON, only if no valid offset value has ever been learned. The non-learned condition would normally occur only after a motor control module reprogramming event.

Conditions for Running the DTC

Vehicle is cycled from ON to OFF.

Conditions for Setting the DTC

Condition 1

Position sensor offset value not learned because drive motor speed is greater than 50 RPM.

Condition 2

Position sensor offset value not learned because hybrid battery voltage is less than 192 V.

Condition 3

Position sensor offset value not learned because drive motor phase current is less than 15 A.

Action Taken When the DTC Sets

DTCs P0C17 and P0C18 are Type A DTCs.

Conditions for Clearing the DTC

DTCs P0C17 and P0C18 are Type A DTCs.

Reference Information

Schematic Reference

Hybrid Controls Schematics

Scan Tool Reference

Control Module References for scan tool information

Circuit/System Verification

1. Verify that DTCs P0A40, P0A45, P0A46, P0A78, P0A79, P0A3F, P0C05, P0C08, P0C0B, P0C0E, P0C4E, P0C4F, P0C52, P0C53, P0C57, P0C58, P0C61, P0C62, P0C5C, P0C5D, P1B03, P1B04, P1B0D or P1B0E is not set.
   If DTC is set, refer to Diagnostic Trouble Code (DTC) List - Vehicle .
2. If the DTC is set, program the T6 power inverter module. If the DTC resets, replace the T6 power inverter module.

Repair Instructions

Perform the Diagnostic Repair Verification after completing the diagnostic procedure.

Control Module References for Drive Motor Generator Power Inverter Module, also called the power inverter module, replacement, programming and set-up.

&#169© Copyright Chevrolet. All rights reserved

DTC P0C19

Diagnostic Instructions

- Perform the Diagnostic System Check - Vehicle prior to using this diagnostic procedure.
- Review Strategy Based Diagnosis for an overview of the diagnostic approach.
- Diagnostic Procedure Instructions provides an overview of each diagnostic category.

DTC Descriptor

DTC P0C19: Drive Motor 1 Torque Delivered Performance

Circuit/System Description

Each drive motor generator is controlled by a motor control module. The motor control module constantly monitors the requested torque and the delivered torque of its respective drive motor generator. The motor control module is part of the power inverter module, also called the drive motor generator power inverter module and is not serviced separately.

Conditions for Running the DTC

- Vehicle ON.
- Drive motor 1 is commanded to develop torque.

Conditions for Setting the DTC

The motor control module has detected that the drive motor torque is not being delivered as expected.

Action Taken When the DTC Sets

- DTC P0C19 is a Type A DTC.
- The hybrid powertrain control module requests the hybrid powertrain control module 2 to open the high-voltage contactor relays.

Conditions for Clearing the DTC

DTC P0C19 is a Type A DTC.

Diagnostic Aids

Because the engine and drive motor 1 are mechanically connected through a planetary gear set, an engine condition that requires drive motor 1 to consume excessive current while trying to rotate the engine may cause this DTC to set such as:

- Extreme braking during regeneration may cause this DTC to be set in history.
- Seized or binding engine
- Seized or binding accessory drive belt

Reference Information

DTC Type Reference

Powertrain Diagnostic Trouble Code (DTC) Type Definitions

Circuit/System Verification

1. Verify that the engine is not seized or binding.
   If the engine is seized or binding, refer to Symptoms - Engine Mechanical .
2. If the DTC is set, program the T6 power inverter module. If the DTC resets, replace the T6 power inverter module.

Repair Instructions

Perform the Diagnostic Repair Verification after completing the diagnostic procedure.

Control Module References for Drive Motor Generator Power Inverter Module, also called the power inverter module, replacement, programming and set-up.

&#169© Copyright Chevrolet. All rights reserved

DTC P0C1A

Diagnostic Instructions

- Perform the Diagnostic System Check - Vehicle prior to using this diagnostic procedure.
- Review Strategy Based Diagnosis for an overview of the diagnostic approach.
- Diagnostic Procedure Instructions provides an overview of each diagnostic category.

DTC Descriptor

DTC P0C1A: Drive Motor 2 Torque Delivered Performance

Circuit/System Description

Each drive motor generator is controlled by a motor control module. The motor control module constantly monitors the requested torque and the delivered torque of its respective drive motor generator. The motor control module is part of the power inverter module, also called the drive motor generator power inverter module and is not serviced separately.

Conditions for Running the DTC

- Vehicle ON.
- Drive motor 2 is commanded to develop torque.

Conditions for Setting the DTC

The motor control module has detected that drive motor generator torque is not being delivered as expected.

Action Taken When the DTC Sets

- DTC P0C1A is a Type A DTC.
- The hybrid powertrain control module requests the hybrid powertrain control module 2 to open the high-voltage contactor relays.

Conditions for Clearing the DTC

DTC P0C1A is a Type A DTC.

Diagnostic Aids

Extremely hard braking during regeneration may cause this DTC to be set in history.

Reference Information

DTC Type Reference

Powertrain Diagnostic Trouble Code (DTC) Type Definitions

Circuit/System Verification

If the DTC is set, program the T6 power inverter module. If the DTC resets, replace the T6 power inverter module.

Repair Instructions

Perform the Diagnostic Repair Verification after completing the diagnostic procedure.

Control Module References for Drive Motor Generator Power Inverter Module, also called the power inverter module, replacement, programming and set-up.

&#169© Copyright Chevrolet. All rights reserved

DTC P0C20

Diagnostic Instructions

- Perform the Diagnostic System Check - Vehicle prior to using this diagnostic procedure.
- Review Strategy Based Diagnosis for an overview of the diagnostic approach.
- Diagnostic Procedure Instructions provides an overview of each diagnostic category.

DTC Descriptor

DTC P0C20: Auxiliary Transmission Fluid Pump Phase U-V-W Circuits

Circuit/System Description

The power inverter module, often referred to as the drive motor generator power inverter module, contains three motor control modules and the hybrid powertrain control module. Two of the motor control modules operate their respective drive motor generator based upon drive motor generator power inverter module commands. The third motor control module controls the Auxiliary Transmission Fluid Pump Motor. The motors utilise 3 phase AC electricity. The motor stator coil is comprised of three-phase circuits. The phase circuits are identified as phase U, phase V and phase W. The U-V-W phase circuits are connected in a wye configuration. This means each phase in the motor stator is connected at a single, central point. The motor control modules monitor a current sensor connected to each motor phase. The current sensors are part of the motor control module assembly and are not serviced separately. The motor control modules are part of the power inverter module and are not serviced separately.

Conditions for Running the DTC

- The vehicle is ON.
- The motor control module has applied current to the auxiliary transmission fluid pump motor.

Conditions for Setting the DTC

The motor control module detects at least one U-V-W phase current sensor is less than 1.0 A.

Action Taken When the DTC Sets

- DTC P0C20 is a Type A DTC.
- Vehicle propulsion will be disabled.

Conditions for Clearing the DTC

DTC P0C20 is a Type A DTC.

Reference Information

Schematic Reference

Hybrid Controls Schematics

Electrical Information Reference

- Circuit Testing
- Connector Repairs
- Testing for Intermittent Conditions and Poor Connections
- Wiring Repairs

DTC Type Reference

Powertrain Diagnostic Trouble Code (DTC) Type Definitions

Circuit/System Testing

> **Danger:** Always perform the High-Voltage Disabling procedure prior to servicing any High Voltage component or connection. Personal Protection Equipment (PPE) and proper procedures must be followed.
>
> The High-Voltage Disabling procedure will perform the following tasks:
>
> - Identify how to disable high voltage.
> - Identify how to test for the presence of high voltage.
> - Identify conditions under which high voltage is always present and personal protection equipment (PPE) and proper procedures must be followed.
>
> Failure to follow the procedures exactly as written may result in serious injury or death.

1. Perform the High Voltage Disabling procedure for servicing the T6 power inverter module assembly or T12 Transmission.
2. Disconnect the X8 connector from the T6 power inverter module.
3. Test for infinite resistance between the terminals listed below and each for each phase of the G5 auxiliary transmission fluid pump:

- Terminal 1 phase U
- Terminal 2 phase V
- Terminal 3 phase W

  If less than the specified value, replace the G5 auxiliary transmission fluid pump.

4. Replace the T6 power inverter module.

Repair Instructions

Perform the Diagnostic Repair Verification after completing the diagnostic procedure.

- Auxiliary Fluid Pump Motor and Fluid Pump Disassemble and Auxiliary Fluid Pump Motor and Fluid Pump Assemble for Auxiliary Transmission Fluid Pump replacement
- Control Module References for Drive Motor Generator Power Inverter Module, also called the power inverter module, replacement, programming and set-up.

&#169© Copyright Chevrolet. All rights reserved

DTC P0C28

Diagnostic Instructions

- Perform the Diagnostic System Check - Vehicle prior to using this diagnostic procedure.
- Review Strategy Based Diagnosis for an overview of the diagnostic approach.
- Diagnostic Procedure Instructions provides an overview of each diagnostic category.

DTC Descriptor

DTC P0C28: Auxiliary Transmission Fluid Pump High Current

Circuit/System Description

The power inverter module, often referred to as the drive motor generator power inverter module, contains three motor control modules and the hybrid powertrain control module. Two of the motor control modules operate their respective drive motor generator based upon drive motor generator power inverter module commands. The third motor control module controls the Auxiliary Transmission Fluid Pump Motor. The motors utilise 3 phase AC electricity. The motor stator coil is comprised of three-phase circuits. The phase circuits are identified as phase U, phase V and phase W. The U-V-W phase circuits are connected in a wye configuration. This means each phase is connected at a single, central point. The motor control modules monitor a current sensor connected to each motor phase. The current sensor is part of the motor assembly and is not serviced separately. The motor control modules are part of the power inverter module and are not serviced separately.

Conditions for Running the DTC

Vehicle is ON.

Conditions for Setting the DTC

One or more phase currents are greater than 35 A.

Action Taken When the DTC Sets

- DTC P0C28 is a Type A DTC.

- Vehicle propulsion will be disabled.

Conditions for Clearing the DTC

DTC P0C28 is a Type A DTC.

Reference Information

Schematic Reference

Hybrid Controls Schematics

Electrical Information Reference

- Circuit Testing
- Connector Repairs
- Testing for Intermittent Conditions and Poor Connections
- Wiring Repairs

DTC Type Reference

Powertrain Diagnostic Trouble Code (DTC) Type Definitions

Circuit/System Testing

> **Danger:** Always perform the High-Voltage Disabling procedure prior to servicing any High Voltage component or connection. Personal Protection Equipment (PPE) and proper procedures must be followed.
>
> The High-Voltage Disabling procedure will perform the following tasks:
>
> - Identify how to disable high voltage.
> - Identify how to test for the presence of high voltage.
> - Identify conditions under which high voltage is always present and personal protection equipment (PPE) and proper procedures must be followed.
>
> Failure to follow the procedures exactly as written may result in serious injury or death.

1. Perform the High Voltage Disabling procedure for servicing the T6 power inverter module or T12 transmission.
2. Disconnect the X8 connector from the T6 power inverter module.
3. Test for infinite resistance between the terminals listed below and each for each phase of the G5 auxiliary transmission fluid pump:
   - X8 terminal 3 phase U

- X8 terminal 2 phase V
- X8 terminal 1 phase W

  If less than the specified value, replace the G5 auxiliary transmission fluid pump.

4. Replace the T6 power inverter module.

Repair Instructions

Perform the Diagnostic Repair Verification after completing the diagnostic procedure.

- Auxiliary Fluid Pump Motor and Fluid Pump Disassemble and Auxiliary Fluid Pump Motor and Fluid Pump Assemble for auxiliary transmission fluid pump replacement.
- Control Module References for Drive Motor Generator Power Inverter Module, also called the power inverter module, replacement, programming and set-up.

&#169© Copyright Chevrolet. All rights reserved

DTC P0C4E

Diagnostic Instructions

- Perform the Diagnostic System Check - Vehicle prior to using this diagnostic procedure.
- Review Strategy Based Diagnosis for an overview of the diagnostic approach.
- Diagnostic Procedure Instructions provides an overview of each diagnostic category.

DTC Descriptors

DTC P0C4E: Drive Motor 1 Position Exceeded Learning Limit

Circuit/System Description

The drive motor generator position sensor is monitored by the motor control module. The motor control module monitors the angular position, speed and direction of the drive motor generator rotor based upon the signals of the resolver-type position sensor. The position sensor contains a drive coil, two driven coils and an irregular shaped metallic rotor. The metallic rotor is mechanically attached to the shaft of the drive motor generator. At vehicle ON, the motor control module outputs a 7 volt ac, 10 kHz excitation signal to the drive coil. The drive coil excitation signal creates a magnetic field surrounding the two driven coils and the irregular shaped rotor. The motor control module then monitors the two driven coil circuits for a return signal. The position of the irregular metallic rotor causes the magnetically-induced return signals of the driven coils to vary in size and shape. A comparison of the two driven coils signals allows the motor control module to determine the exact position, speed and direction of the drive motor generator rotor.

Offset is the relationship between the position sensor and the drive motor generator output shaft. When the vehicle is turned OFF, the motor control module attempts to learn the offset of the drive motor position sensor.

Conditions for Running the DTC

- The vehicle is cycled OFF.
- Drive motor generator speed is less than 20 RPM.
- DC High Voltage is greater than 192 V.

Conditions for Setting the DTC

- The position sensor total offset exceeds 30 degrees during the learning process.
- The current learned value differs from the previous learned value by greater than 10 degrees.

Action Taken When the DTC Sets

DTC P0C4E is a Type A DTC.

Conditions for Clearing the DTC

DTC P0C4E is a Type A DTC.

Diagnostic Aids

- The drive motor generator position sensor circuits operate at very low current. Just a few ohms of additional circuit resistance may cause position sensor signal degradation. Extreme care must be taken when probing terminals and manipulating harnesses.
- The sensor circuit loops are a twisted pair with each pair covered in a foil shield. The shield circuits outside of the transmission are earthed to the drive motor generator power inverter module.
- Ensure the drive motor generator position sensor harness shield circuits are properly earthed prior to testing.

Reference Information

Schematic Reference

Hybrid Controls Schematics

Connector End View Reference

- Component Connector End Views
- Inline Harness Connector End Views

Electrical Information Reference

- Circuit Testing
- Connector Repairs
- Testing for Intermittent Conditions and Poor Connections
- Wiring Repairs

Special Tools

DT-44152 Jumper Harness

For equivalent regional tools, refer to Special Tools .

Circuit/System Testing

Note: You must perform the Component Testing before proceeding with Circuit/System Testing.

1. Verify that DTCs P0A3F, P0A40, P0C52, P0C53, P0C5C, P0C5D or P1B03 are not set.
   If any of the DTCs are set, refer to DTC P0A3F, P0A40, P0C52, P0C53, P0C5C, P0C5D or P1B03 .
2. Vehicle OFF, disconnect the X175 harness connector at the transmission.
3. Install the *DT-44152* jumper harness to the harness side only.
4. Disconnect the X1 harness connector at the T6 power inverter module.
5. Test for less than 1 Ω between the terminals listed below:
   - DT 44152 Terminal L and X1 terminal 1
   - DT 44152 Terminal M and X1 terminal 12
   - DT 44152 Terminal U and X1 terminal 2
   - DT 44152 Terminal T and X1 terminal 13
   - DT 44152 Terminal W and X1 terminal 3
   - DT 44152 Terminal V and X1 terminal 14

   If greater that the specified range, test the signal circuit for an open/high resistance.
6. If all circuits test normal, replace the drive motor generator position sensor.

Component Testing

1. Vehicle OFF, disconnect the X175 harness connector at the transmission.
2. Install the *DT-44152* jumper harness to the transmission side only.
3. Test for 10-25 Ω between the AC circuit at terminal V and the AC circuit at terminal W.
   If less than the specified range, test the transmission control wiring harness extension harness circuits for a short-circuit between the AC circuits. If the circuits test normal, replace the drive motor generator position sensor.
   If greater than the specified range, test each transmission control wiring harness extension harness AC circuits for an open-circuit. If the circuits test normal, replace the drive motor generator position sensor.
4. Test for 15-35 Ω between the signal terminal U and the signal terminal T.
   If less than the specified range, test the transmission control wiring harness extension harness circuits for a short-circuit between the signal circuits. If the circuits test normal, replace the drive motor generator position sensor.
   If greater than the specified range, test each transmission control wiring harness extension harness signal circuits for an open-circuit. If the circuits test normal, replace the drive motor generator position sensor.
5. Test for 15-35 Ω between the signal terminal L and the signal terminal M.

If less than the specified range, test the transmission control wiring harness extension harness circuits for a short-circuit between the signal circuits. If the circuits test normal, replace the drive motor generator position sensor.

If greater than the specified range, test each transmission control wiring harness extension harness signal circuits for an open-circuit. If the circuits test normal, replace the drive motor generator position sensor.

6. Test for greater than 10 Ω between the terminals listed below and earth:
   - Terminal V
   - Terminal W
   - Terminal U
   - Terminal T
   - Terminal L
   - Terminal M

   If less that the specified value, test the transmission control wiring harness extension harness circuit for a short-circuit to earth. If the circuit tests normal, replace the drive motor generator position sensor.
7. Test for infinite resistance between the terminals listed below:
   - Terminals V and U
   - Terminals V and L
   - Terminals U and L

   If less that the specified value, test the transmission control wiring harness extension harness circuits for a short-circuit between the circuits. If the circuits test normal, replace the drive motor generator position sensor.

Repair Instructions

Perform the Diagnostic Repair Verification after completing the diagnostic procedure.

- Case Cover Assembly Disassemble and Case Cover Assembly Assemble for drive motor generator 1 position sensor replacement.
- Automatic Transmission Wiring Harness and Output Speed Sensor Removal and Automatic Transmission Wiring Harness and Output Speed Sensor Installation for Wiring Harness Extension Harness replacement

&#169© Copyright Chevrolet. All rights reserved

DTC P0C4F

Diagnostic Instructions

- Perform the Diagnostic System Check - Vehicle prior to using this diagnostic procedure.
- Review Strategy Based Diagnosis for an overview of the diagnostic approach.
- Diagnostic Procedure Instructions provides an overview of each diagnostic category.

DTC Descriptors

DTC P0C4F: Drive Motor 2 Position Exceeded Learning Limit

Circuit/System Description

The drive motor generator position sensor is monitored by the motor control module. The motor control module monitors the angular position, speed and direction of the drive motor generator rotor based upon the signals of the resolver-type position sensor. The position sensor contains a drive coil, two driven coils and an irregular shaped metallic rotor. The metallic rotor is mechanically attached to the shaft of the drive motor generator. At vehicle ON, the motor control module outputs a 7 volt ac, 10 kHz excitation signal to the drive coil. The drive coil excitation signal creates a magnetic field surrounding the two driven coils and the irregular shaped rotor. The motor control module then monitors the two driven coil circuits for a return signal. The position of the irregular metallic rotor causes the magnetically-induced return signals of the driven coils to vary in size and shape. A comparison of the two driven coils signals allows the motor control module to determine the exact position, speed and direction of the drive motor generator rotor.

Offset is the relationship between the position sensor and the drive motor generator output shaft. When the vehicle is turned OFF, the motor control module attempts to learn the offset of the drive motor position sensor.

Conditions for Running the DTC

- The vehicle is cycled OFF.
- Drive motor generator speed is less than 20 RPM.
- DC High Voltage is greater than 192 V.

Conditions for Setting the DTC

- The position sensor offset total exceeds 30 degrees during the learning process.
- The current learned value differs from the previous learned value by greater than 10 degrees.

Action Taken When the DTC Sets

DTC P0C4F is a Type A DTC.

Conditions for Clearing the DTC

DTC P0C4F is a Type A DTC.

Diagnostic Aids

- The drive motor generator position sensor circuits operate at very low current. Just a few ohms of additional circuit resistance may cause position sensor signal degradation. Extreme care must be taken when probing terminals and manipulating harnesses.
- The sensor circuit loops are a twisted pair with each pair covered in a foil shield. The shield circuits outside of the transmission are earthed to the drive motor generator power inverter module.
- Ensure the drive motor generator position sensor harness shield circuits are properly earthed prior to testing.

Reference Information

Schematic Reference

Hybrid Controls Schematics

Connector End View Reference

- Component Connector End Views
- Inline Harness Connector End Views

Electrical Information Reference

- Circuit Testing
- Connector Repairs
- Testing for Intermittent Conditions and Poor Connections
- Wiring Repairs

Circuit/System Testing

Note: You must perform the Component Testing before proceeding with Circuit/System Testing.

1. Verify that DTC P0A45, P0A46, P0C57, P0C58, P0C61, P0C62, or P1B04 are not set.
   If any of the DTCs are set, refer to DTC P0A45, P0A46, P0C57, P0C58, P0C61, P0C62, or P1B04 .
2. Vehicle OFF, disconnect the X1 and X2 harness connectors at the transmission.
3. Disconnect the X1 harness connector at the T6 power inverter module.
4. Test for less than 1 Ω between the terminals listed below:
   - Terminals 20 and X1 terminal 1
   - Terminals 30 and X1 terminal 2
   - Terminals 21 and X1 terminal 3
   - Terminals 31 and X1 terminal 4
   - Terminals 22 and X2 terminal 1
   - Terminals 32 and X2 terminal 1

   If greater that the specified range, test the signal circuit for an open/high resistance.
5. If all circuits test normal, replace the drive motor generator 2 position sensor.

Component Testing

1. Vehicle OFF, disconnect the X1 and X2 harness connectors at the transmission.
2. Test for 15-25 Ω between the AC circuit at X2 terminal 1 and the AC circuit at X2 terminal 2.
   If not within the specified range, replace the drive motor generator 2 position sensor.
3. Test for 35-55 Ω between the signal circuit at X1 terminal 3 and the signal circuit at X1 terminal 4.
   If not within the specified range, replace the drive motor generator 2 position sensor.
4. Test for 35-55 Ω between the signal circuit at X1 terminal 1 and the signal circuit at X1, terminal 2.
   If not within the specified range, replace the drive motor generator 2 position sensor.
5. Test for greater than 15 Ω between the terminals listed below and earth:
   - X1 terminal 1
   - X1 terminal 2
   - X1 terminal 3
   - X1 terminal 4
   - X2 terminal 1
   - X2 terminal 2

   If less than the specified value, replace the drive motor generator 2 position sensor.
6. Test for infinite resistance between the terminals listed below:
   - X1 terminal 1 and X1 terminal 3
   - X1 terminal 1 and X2 terminal 1

- X1 terminal 3 and X2 terminal 1
  If less than the specified value, replace the drive motor generator 2 position sensor.

Repair Instructions

Perform the Diagnostic Repair Verification after completing the diagnostic procedure.

Drive Motor Generator Position Sensor Stator Removal and Drive Motor Generator Position Sensor Stator Installation for drive motor generator 2 position sensor replacement

&#169© Copyright Chevrolet. All rights reserved

DTC P150D or P150E

Diagnostic Instructions

- Perform the Diagnostic System Check - Vehicle prior to using this diagnostic procedure.
- Review Strategy Based Diagnosis for an overview of the diagnostic approach.
- Diagnostic Procedure Instructions provides an overview of each diagnostic category.

DTC Descriptor

DTC P150D: Supply Voltage Circuit 2 Low Voltage

DTC P150E: Supply Voltage Circuit 1 Low Voltage

Circuit/System Description

The power inverter module, often referred to as the drive motor generator power inverter module, contains three motor control modules and the hybrid powertrain control module. Two of the motor control modules operate their respective drive motor generator based upon drive motor generator power inverter module commands. The third motor control module controls the auxiliary transmission fluid pump motor. The hybrid powertrain control module and the motor control modules share the drive motor generator power inverter module ignition voltage circuit, battery voltage circuits and chassis earth.

Conditions for Running the DTC

The vehicle is ON

Conditions for Setting the DTC

- DTC P150D: battery voltage on circuit 2 is less than 8.0 V for more than 2.5 seconds.
- DTC P150E: battery voltage on circuit 1 is less than 8.0 V for more than 2.5 seconds.

Action Taken When the DTC Sets

DTC P150D and P150E are Type C DTCs.

Conditions for Clearing the DTC

DTC P150D and P150E are Type C DTCs.

Reference Information

Electrical Information Reference

- Circuit Testing
- Connector Repairs
- Testing for Intermittent Conditions and Poor Connections
- Wiring Repairs

DTC Type Reference

Powertrain Diagnostic Trouble Code (DTC) Type Definitions

Circuit/System Verification

1. Verify that DTC P0562 or P0563 is not set.
   If DTC P0562 or P0563 is set, refer to DTC B1325, B1330, B1517, C0800, C0899, C0900, C12E1, C12E2, P0562, P0563, P1A0C, P1A0D, or P1EFC .

DTC P150D

1. Vehicle OFF, disconnect the X1 harness connector at the T6 power inverter module.
2. Vehicle ON, verify it is greater than 12.0 V at terminal 24.
   If less than the specified range, test the circuit for a short to ground or an open/high resistance.
3. If the circuit tests normal, program the T6 power inverter module. If the DTC resets, replace the T6 power inverter module.

DTC P150E

1. Vehicle OFF, disconnect the X2 harness connector at the T6 power inverter module.
2. Vehicle ON, verify it is greater than 12.0 V at terminal 35.
   If less than the specified range, test the circuit for a short to ground or an open/high resistance.
3. If the circuit tests normal, program the T6 power inverter module. If the DTC resets, replace the T6 power inverter module.

Repair Instructions

Perform the Diagnostic Repair Verification after completing the diagnostic procedure.

Control Module References for Drive Motor Generator Power Inverter Module, also called the power inverter module, replacement, programming and set-up.

&#169© Copyright Chevrolet. All rights reserved

DTC P15F0

Diagnostic Instructions

- Perform the Diagnostic System Check - Vehicle prior to using this diagnostic procedure.
- Review Strategy Based Diagnosis for an overview of the diagnostic approach.
- Diagnostic Procedure Instructions provides an overview of each diagnostic category.

DTC Descriptor

DTC P15F0: Engine Torque Delivered Circuit

Circuit/System Description

This diagnostic applies to internal microprocessor integrity conditions within the hybrid powertrain control module. The hybrid powertrain control module is internal to the drive motor generator power inverter module, and is not serviced separately. The hybrid powertrain control module monitors its ability to read and write to the memory. The hybrid powertrain control module processor monitors the data to verify that the indicated engine torque delivered calculation is correct.

Conditions for Running the DTC

- The ignition is ON.
- The system voltage is 8-18 V.

Conditions for Setting the DTC

The control module has detected an internal malfunction.

Action Taken When the DTC Sets

- DTC P15F0 is a Type A DTC.
- The hybrid powertrain control module commands the battery energy control module to open the high voltage contactor relays.

Conditions for Clearing the DTC

DTC P15F0 is a Type A DTC.

Reference Information

DTC Type Reference

Powertrain Diagnostic Trouble Code (DTC) Type Definitions

Circuit/System Verification

If the DTC is set, program the T6 drive motor generator power inverter module. If the DTC resets, replace the T6 drive motor generator power inverter module.

Repair Instructions

Perform the Diagnostic Repair Verification after completing the diagnostic procedure.

Control Module References for Drive Motor Generator Power Inverter Module replacement, set-up and programming.

&#169© Copyright Chevrolet. All rights reserved

DTC P15F1

Diagnostic Instructions

- Perform the Diagnostic System Check - Vehicle prior to using this diagnostic procedure.
- Review Strategy Based Diagnosis for an overview of the diagnostic approach.
- Diagnostic Procedure Instructions provides an overview of each diagnostic category.

DTC Descriptor

DTC P15F1: Axle Torque Request Circuit

Circuit/System Description

This diagnostic applies to internal microprocessor integrity conditions within the hybrid powertrain control module. The hybrid powertrain control module is internal to the drive motor generator power inverter module, and is not serviced separately. The hybrid powertrain control module monitors its ability to read and write to the memory. The hybrid powertrain control module processor monitors the data to verify that the indicated axle torque requested calculation is correct.

Conditions for Running the DTC

- The ignition is ON.
- The system voltage is 8-18 V.

Conditions for Setting the DTC

The control module has detected an internal malfunction.

Action Taken When the DTC Sets

- DTC P15F1 is a Type A DTC.
- The hybrid powertrain control module commands the battery energy control module to open the high voltage contactor relays.

Conditions for Clearing the DTC

DTC P15F1 is a Type A DTC.

Reference Information

DTC Type Reference

Powertrain Diagnostic Trouble Code (DTC) Type Definitions

Circuit/System Verification

If the DTC is set, program the T6 drive motor generator power inverter module. If the DTC resets, replace the T6 drive motor generator power inverter module.

Repair Instructions

Perform the Diagnostic Repair Verification after completing the diagnostic procedure.

Control Module References for Drive Motor Generator Power Inverter Module replacement, set-up and programming.

&#169© Copyright Chevrolet. All rights reserved

DTC P15F2

Diagnostic Instructions

- Perform the Diagnostic System Check - Vehicle prior to using this diagnostic procedure.
- Review Strategy Based Diagnosis for an overview of the diagnostic approach.
- Diagnostic Procedure Instructions provides an overview of each diagnostic category.

DTC Descriptor

DTC P15F2: Engine Torque Command Signal Message Counter Incorrect

Circuit/System Description

This diagnostic applies to internal microprocessor integrity conditions within the engine control module (ECM). The hybrid powertrain control module is internal to the power inverter module, often referred to as the drive motor generator power inverter module and is not serviced separately. The hybrid powertrain control module sends an engine torque requested message to the ECM over the serial data circuits. The ECM monitors the data to verify the indicated engine torque requested calculation is correct. The ECM processor monitors the data to verify that the engine torque command is correct.

Conditions for Running the DTC

- Vehicle is ON.
- The system voltage is 8-18 V.
- DTC U1817 is not set.

Conditions for Setting the DTC

The control module has detected an internal malfunction.

Action Taken When the DTC Sets

- DTC P15F2 is a Type A DTC.

- The hybrid powertrain control module requests the hybrid powertrain control module 2 to open the high-voltage contactor relays.

Conditions for Clearing the DTC

DTC P15F2 is a Type A DTC.

Reference Information

DTC Type Reference

Powertrain Diagnostic Trouble Code (DTC) Type Definitions

Circuit/System Verification

Note: Diagnose and repair any communication DTCs prior to performing this testing.

If the DTC is set, program the K20 ECM. If the DTC resets, replace the K20 ECM.

Repair Instructions

Perform the Diagnostic Repair Verification after completing the diagnostic procedure.

Control Module References for ECM replacement, programming and set-up.

&#169© Copyright Chevrolet. All rights reserved

DTC P16E0

Diagnostic Instructions

- Perform the Diagnostic System Check - Vehicle prior to using this diagnostic procedure.
- Review Strategy Based Diagnosis for an overview of the diagnostic approach.
- Diagnostic Procedure Instructions provides an overview of each diagnostic category.

DTC Descriptor

DTC P16E0: Engine Performance - No Torque Detected

Circuit/System Description

This vehicle does not use a 12 V starter motor to crank the internal combustion engine. A much more powerful 300 V drive motor generator located within the transmission is utilised to crank the engine. The 300 V drive motor generator can rotate the engine to operating speed, 800 RPM, within just a few hundred milliseconds. The hybrid powertrain control module can detect a condition where the engine is cranking but does not start or has stalled.

Conditions for Running the DTC

- The vehicle is ON.
- The system voltage is at least 10 V.
- DTC U0100 is not set.
- Engine running.
- Fuel Level is NOT Low.
- No Fuel Level sensor DTCs set.

Conditions for Setting the DTC

The hybrid powertrain control module expected the engine to be supplying torque but no torque is detected.

Action Taken When the DTC Sets

DTC P16E0 is a Type A DTC.

Conditions for Clearing the DTC

DTC P16E0 is a Type A DTC.

Diagnostic Aids

Any condition that causes the engine to stall and/or not start may set this DTC. Possible conditions include:

- Fuel conditions such as low pressure or contamination.
- Engine conditions such as low compression.
- Restricted exhaust or air intake systems.

Always inspect for DTCs that would cause an engine stall and/or no start condition.

Reference Information

Electrical Information Reference

- Circuit Testing
- Connector Repairs
- Testing for Intermittent Conditions and Poor Connections
- Wiring Repairs

DTC Type Reference

Powertrain Diagnostic Trouble Code (DTC) Type Definitions

Circuit/System Verification

Vehicle ON. Operate the hood release to open the hood. The engine should start and run.

If the engine fails to start, diagnose the engine system. Refer to Engine Cranks But Does Not Run .

Repair Instructions

Perform the Diagnostic Repair Verification after completing the diagnostic procedure.

&#169© Copyright Chevrolet. All rights reserved

DTC P16F2

Diagnostic Instructions

- Perform the Diagnostic System Check - Vehicle prior to using this diagnostic procedure.
- Review Strategy Based Diagnosis for an overview of the diagnostic approach.
- Diagnostic Procedure Instructions provides an overview of each diagnostic category.

DTC Descriptor

DTC P16F2: Control Module Transmission Direction Range Switch

Circuit/System Description

The hybrid powertrain control module compares the internal mode switch requested direction to other data to verify that the indicated direction range switch calculation is correct.

Conditions for Running the DTC

- The ignition is ON.
- Ignition voltage is at least 9.5 V and no more than 18 V.

Conditions for Setting the DTC

Condition 1

- No internal mode switch direction switch DTCs are set.
- A valid internal mode switch direction indicated by the internal mode switch does not match the direction indicated by the hybrid powertrain control module software.

Condition 2

- No internal mode switch direction switch DTCs are set.

- Two valid internal mode switch directions are indicated at the same time.

Condition 3

- One internal mode switch direction switch circuit has failed.
- The hybrid powertrain control module calculates a transmission direction based upon the remaining internal mode switch circuits but it does not match the direction indicated by the hybrid powertrain control module software.

Condition 4

- Multiple internal mode switch directions and one internal mode switch direction switch circuit has failed.
- Based upon the remaining internal mode switch circuits the hybrid powertrain control module calculated two directions at the same time.

Condition 5

- More than one internal mode switch direction circuit has failed and the hybrid powertrain control module cannot calculate a transmission direction.
- Ignition voltage is 9.5-18 V.

Action Taken When the DTC Sets

- DTC P16F2 is a Type A DTC.
- The hybrid powertrain control module commands the battery energy control module to open the high voltage contactor relays.

Conditions for Clearing the DTC

DTC P16F2 is a Type A DTC.

Reference Information

Schematic Reference

Hybrid Controls Schematics

Connector End View Reference

Component Connector End Views

Electrical Information Reference

- Circuit Testing
- Connector Repairs
- Testing for Intermittent Conditions and Poor Connections
- Wiring Repairs

DTC Type Reference

Powertrain Diagnostic Trouble Code (DTC) Type Definitions

Scan Tool Reference

Control Module References for scan tool information

Circuit/System Verification

1. Verify that DTC P181C, P181D, P181E, P181F, P183A, P183B, P183C, P183D, P183E, P184A or P184B is not set.
   If any of the DTCs are set, refer to DTC P181C-P181F, P183A-P183E, P184A, or P184B .
2. Verify that DTC P16F2 is not set.
   If the DTC is set, program the hybrid powertrain control module. If the DTC resets, replace the T6 drive motor generator power inverter module.

Repair Instructions

Perform the Diagnostic Repair Verification after completing the repair.

Control Module References for Drive Motor Generator Power Inverter Module Replacement, set-up and programming

&#169© Copyright Chevrolet. All rights reserved

DTC P16F3

Diagnostic Instructions

- Perform the Diagnostic System Check - Vehicle prior to using this diagnostic procedure.
- Review Strategy Based Diagnosis for an overview of the diagnostic approach.
- Diagnostic Procedure Instructions provides an overview of each diagnostic category.

DTC Descriptor

DTC P16F3: Control Module Redundant Memory Performance

Circuit/System Description

This diagnostic applies to internal microprocessor integrity conditions within the hybrid powertrain control module. The hybrid powertrain control module is internal to the drive motor generator power inverter module, and is not serviced separately. The hybrid powertrain control module monitors its ability to read and write to the memory. The hybrid powertrain control module processor stores identical data in two locations and compares the data to verify that the stored data is correct.

Conditions for Running the DTC

The system voltage is 8-18 V.

Conditions for Setting the DTC

The control module has detected that identical stored data is not the same when retrieved.

Action Taken When the DTC Sets

- DTC P16F3 is a Type A DTC.
- The hybrid powertrain control module commands the battery energy control module to open the high voltage contactor relays.

Conditions for Clearing the DTC

DTC P16F3 is a Type A DTC.

Reference Information

DTC Type Reference

Powertrain Diagnostic Trouble Code (DTC) Type Definitions

Circuit/System Verification

1. Verify that DTC P1AC6, P0335 or any communication U-code DTC is not set.
   If DTC is set, refer to Diagnostic Trouble Code (DTC) List - Vehicle .
2. If the DTC is set, program the T6 drive motor generator power inverter module. If the DTC resets, replace the T6 drive motor generator power inverter module.

Repair Instructions

Perform the Diagnostic Repair Verification after completing the diagnostic procedure.

Control Module References for Drive Motor Generator Power Inverter Module replacement, set-up and programming.

&#169© Copyright Chevrolet. All rights reserved

DTC P16F4

Diagnostic Instructions

- Perform the Diagnostic System Check - Vehicle prior to using this diagnostic procedure.
- Review Strategy Based Diagnosis for an overview of the diagnostic approach.
- Diagnostic Procedure Instructions provides an overview of each diagnostic category.

DTC Descriptor

DTC P16F4: Control Module Transmission Range Switch Input Circuitry Performance

Circuit/System Description

The automatic transmission manual shift shaft position switch assembly, also called the internal mode switch assembly, contains two sliding hall-effect switch assemblies attached to the control valve body within the transmission. The 9 outputs from the switches indicate which position is selected by the transmission manual shaft. Four outputs (A, B, C, P) are range selection inputs to the transmission control module (TCM). Five outputs (R1, R2, D1, D2, S) are direction selection inputs to the hybrid powertrain control module. The Range input signals are represented as TCM scan tool parameters, Internal Mode Switch A, B, C, and P. The Direction input signals are represented as hybrid powertrain control module scan tool parameters, Internal Mode Switch 2 - R1, R2, D1, D2, and S. The input voltage at the modules is high when a switch is open and low when a switch is closed to earth. Each control module independently supplies power and earth to its respective switch assembly.

The hybrid powertrain control module is internal to the power inverter module, often referred to as the drive motor generator power inverter module and is not serviced separately. The hybrid powertrain control module compares the internal mode switch requested direction to other data to verify that the indicated direction and range switch calculation is correct.

Conditions for Running the DTC

- The vehicle is ON.
- Ignition voltage is greater than 9.5 V.

Conditions for Setting the DTC

Condition 1

The transmission direction, indicated by both the internal mode range and direction switch circuits, are valid but do not match.

Condition 2

- One internal mode direction switch circuit has failed.
- The hybrid powertrain control module calculates a transmission direction based upon the remaining internal mode direction circuits.
- The calculated hybrid powertrain control module transmission direction does not match the direction indicated by the internal mode range switch circuits.

Condition 3

- One internal mode direction switch circuit has failed.
- The hybrid powertrain control module calculates a transmission direction based upon the remaining internal mode direction circuits.
- The internal mode range switch indicates a transitional position.

Condition 4

- One internal mode direction switch circuit has failed.
- The hybrid powertrain control module calculates a transmission direction based upon the remaining internal mode direction circuits.
- The TCM has indicated the internal mode range switch parameter is invalid.

Condition 5

- More than one internal mode direction circuit has failed and the hybrid powertrain control module cannot calculate a transmission direction.
- The internal mode range switch indicates a transitional position.

Condition 6

- More than one internal mode direction circuit has failed and the hybrid powertrain control module cannot calculate a transmission direction.
- The TCM has indicated the internal mode range switch parameter is invalid.

Action Taken When the DTC Sets

- DTC P16F4 is a Type A DTC.
- The hybrid powertrain control module requests the hybrid powertrain control module 2 to open the high-voltage contactor relays.

Conditions for Clearing the DTC

DTC P16F4 is a Type A DTC.

Reference Information

Schematic Reference

Hybrid Controls Schematics

Connector End View Reference

Component Connector End Views

Electrical Information Reference

- Circuit Testing
- Connector Repairs
- Testing for Intermittent Conditions and Poor Connections
- Wiring Repairs

DTC Type Reference

Powertrain Diagnostic Trouble Code (DTC) Type Definitions

Scan Tool Reference

Control Module References for scan tool information

Circuit/System Verification

1. Verify that DTC P181C, P181D, P181E, P181F, P183A, P183B, P183C, P183D, P183E, P184A, or P184B is not set.
   If any of the DTCs are set, refer to DTC P181C-P181F, P183A-P183E, P184A, or P184B .
2. Verify that DTC P1824, P182A, P182B, P182C, P182D, P182E, P182F, P1838, or P1839 is not set.
   If any of the DTCs are set, refer to DTC P1824, P182A-P182F, P1838 or P1839 .
3. Verify that DTC P16F4 is not set.
   If the DTC is set, program the hybrid powertrain control module. If the DTC resets, replace the T6 power inverter module.

Repair Instructions

Perform the Diagnostic Repair Verification after completing the repair.

Control Module References for Drive Motor Generator Power Inverter Module, also called the power inverter module, replacement, programming and set-up.

&#169© Copyright Chevrolet. All rights reserved

DTC P16F6

Diagnostic Instructions

- Perform the Diagnostic System Check - Vehicle prior to using this diagnostic procedure.
- Review Strategy Based Diagnosis for an overview of the diagnostic approach.
- Diagnostic Procedure Instructions provides an overview of each diagnostic category.

DTC Descriptor

DTC P16F6: Control Module Range State Command

Circuit/System Description

This diagnostic applies to internal microprocessor integrity conditions within the hybrid powertrain control module. The hybrid powertrain control module is internal to the drive motor generator power inverter module, and is not serviced separately. The hybrid powertrain control module monitors its ability to read and write to the memory. The hybrid powertrain control module processor monitors the data to verify that the commanded range state calculation is correct.

Conditions for Running the DTC

- The ignition is ON.
- The system voltage is 8-18 V.

Conditions for Setting the DTC

The control module has detected the commanded transmission range state is not correct based upon internal calculations or by a comparison to input or output torque conditions.

Action Taken When the DTC Sets

- DTC P16F6 is a Type A DTC.
- The hybrid powertrain control module commands the battery energy control module to open the high voltage contactor relays.

Conditions for Clearing the DTC

DTC P16F6 is a Type A DTC.

Reference Information

DTC Type Reference

Powertrain Diagnostic Trouble Code (DTC) Type Definitions

Circuit/System Verification

If the DTC is set, program the T6 drive motor generator power inverter module. If the DTC resets, replace the T6 drive motor generator power inverter module.

Repair Instructions

Perform the Diagnostic Repair Verification after completing the diagnostic procedure.

Control Module References for Drive Motor Generator Power Inverter Module replacement, set-up and programming.

&#169© Copyright Chevrolet. All rights reserved

DTC P179A

Diagnostic Instructions

- Perform the Diagnostic System Check - Vehicle prior to using this diagnostic procedure.
- Review Strategy Based Diagnosis for an overview of the diagnostic approach.
- Diagnostic Procedure Instructions provides an overview of each diagnostic category.

DTC Descriptor

DTC P179A: Auxiliary Transmission Fluid Pump Over-speed

Circuit/System Description

The power inverter module, often referred to as the drive motor generator power inverter module, contains three motor control modules and the hybrid powertrain control module. Two of the motor control modules operate their respective drive motor generator based upon drive motor generator power inverter module commands. The third motor control module controls the auxiliary transmission fluid pump motor. The hybrid powertrain control module and the motor control modules share the power inverter module ignition voltage circuit, battery voltage circuits and chassis earth.

Conditions for Running the DTC

The vehicle is ON or the power inverter module is awake.

Conditions for Setting the DTC

An auxiliary transmission fluid pump motor speed of greater than 6,500 RPM has been detected.

Action Taken When the DTC Sets

DTC P179A is a Type A DTC.

Conditions for Clearing the DTC

DTC P179A is a Type A DTC.

Reference Information

DTC Type Reference

Powertrain Diagnostic Trouble Code (DTC) Type Definitions

Circuit/System Verification

If the DTC is set, program the T6 power inverter module. If the DTC resets, replace the T6 power inverter module.

Repair Instructions

Perform the Diagnostic Repair Verification after completing the diagnostic procedure.

Control Module References for Drive Motor Generator Power Inverter Module, also called the power inverter module, replacement, programming and set-up.

&#169© Copyright Chevrolet. All rights reserved

DTC P181C-P181F, P183A-P183E, P184A, or P184B

Diagnostic Instructions

- Perform the Diagnostic System Check - Vehicle prior to using this diagnostic procedure.
- Review Strategy Based Diagnosis for an overview of the diagnostic approach.
- Diagnostic Procedure Instructions provides an overview of each diagnostic category.

DTC Descriptor

DTC P181C: Internal Mode Switch 2 R1 Circuit Low Voltage

DTC P181D: Internal Mode Switch 2 R1 Circuit High Voltage

DTC P181E: Internal Mode Switch 2 R2 Circuit Low Voltage

DTC P181F: Internal Mode Switch 2 R2 Circuit High Voltage

DTC P183A: Internal Mode Switch 2 D1 Circuit Low Voltage

DTC P183B: Internal Mode Switch 2 D1 Circuit High Voltage

DTC P183C: Internal Mode Switch 2 D2 Circuit Low Voltage

DTC P183D: Internal Mode Switch 2 D2 Circuit High Voltage

DTC P183E: Internal Mode Switch 2 Invalid Range

DTC P184A: Internal Mode Switch 2 S Circuit Low Voltage

DTC P184B: Internal Mode Switch 2 S Circuit High Voltage

Diagnostic Fault Information

Circuit	Short to Ground	Open/High Resistance	Short to Voltage	Signal Performance
Signal R1	P181C	P181D	P181D	-
Signal R2	P181E	P181F	P181F	-
Signal D1	P183A	P183B	P183B	-
Signal D2	P183C	P183D	P183D	-
Signal S	P184A	P184B	P184B	--
Low Reference	--	P183E	--	--

Circuit/System Description

The automatic transmission manual shift shaft position switch assembly, also called the internal mode switch assembly, contains two sliding hall-effect switch assemblies attached to the control valve body within the transmission. The 9 outputs from the switches indicate which position is selected by the transmission manual shaft. Four outputs (A, B, C, P) are range selection inputs to the transmission control module (TCM). Five outputs (R1, R2, D1, D2, S) are direction selection inputs to the hybrid powertrain control module. The Range input signals are represented as TCM scan tool parameters, Internal Mode Switch A, B, C, and P. The Direction input signals are represented as hybrid powertrain control module scan tool parameters, Internal Mode Switch 2 - R1, R2, D1, D2, and S. The input voltage at the modules is high when a switch is open and low when a switch is closed to earth. Each control module independently supplies power and earth to its respective switch assembly.

The hybrid powertrain control module is internal to the power inverter module, often referred to as the drive motor generator power inverter module and is not serviced separately.

Conditions for Running the DTC

- The vehicle is ON for at least 5 seconds.
- The ignition voltage is greater than 9.0 V.

Conditions for Setting the DTC

The direction internal mode switch state does not match a selected gear for 5 seconds.

Action Taken When the DTC Sets

DTCs P181C, P181D, P181E, P181F, P183A, P183B, P183C, P183D, P183E, P184A and P184B are Type B DTCs.

Conditions for Clearing the DTC

DTCs P181C, P181D, P181E, P181F, P183A, P183B, P183C, P183D, P183E, P184A and P184B are Type B DTCs.

Diagnostic Aids

- The internal mode switch assembly can be damaged by electric current exceeding 25 mA. Test the internal mode switch assembly for an open condition whenever a short-circuit to voltage condition is observed.
- The internal mode switch is a non-serviceable part of the manual shift shaft position switch.

Reference Information

Schematic Reference

- Hybrid Controls Schematics
- Automatic Transmission Controls Schematics

Connector End View Reference

Component Connector End Views

Electrical Information Reference

- Circuit Testing
- Connector Repairs
- Testing for Intermittent Conditions and Poor Connections
- Wiring Repairs

DTC Type Reference

Powertrain Diagnostic Trouble Code (DTC) Type Definitions

Scan Tool Reference

Control Module References for scan tool information

Special Tools

DT-44152 Jumper Harness

For equivalent regional tools, refer to Special Tools .

Circuit/System Verification

Vehicle ON, observe the scan tool internal mode switch 2 parameters while moving the gear shift lever from Park, through all gear selector positions, and back to Park. The parameters should match each gear range that is selected. Refer to Internal Mode Switch 2 Parameters table below:

Internal Mode Switch 2 Parameters

Parameter	Selector Position				
	Park	Reverse	Neutral	Drive	Manual
Internal Mode Switch 2 - D1	HIGH	HIGH	LOW	LOW	LOW
Internal Mode Switch 2 - D2	LOW	LOW	HIGH	HIGH	HIGH
Internal Mode Switch 2 - R1	HIGH	LOW	LOW	HIGH	HIGH
Internal Mode Switch 2 - R2	LOW	HIGH	HIGH	LOW	LOW
Internal Mode Switch 2 - S	LOW	HIGH	LOW	HIGH	HIGH

Circuit/System Testing

1. Vehicle OFF. Disconnect the X175 20-way harness connector at the transmission. Additional DTCs may set.
2. Install the *DT-44152* jumper harness to the harness side only.
3. Vehicle OFF and all vehicle systems OFF. It may take up to 2 minutes for all vehicle systems to power down. Test for less than 10 Ω between the low reference circuit terminal G and earth.
   If greater than the specified range, test the low reference circuit for an open/high resistance. If the circuit tests normal, replace the T6 power inverter module.
4. Vehicle ON, verify that each scan tool D1/D2/R1/R2/S parameter displays high.
   If any parameter displays low, test that signal circuit terminal, as listed below, for a short-circuit to earth. If the circuit tests normal, replace the T6 power inverter module.
   - Parameter D1 - terminal E
   - Parameter D2 - terminal F
   - Parameter R1 - terminal C
   - Parameter R2 - terminal D
   - Parameter S - terminal B
5. Install a 3 A fused jumper wire between each terminal listed below, one at a time, and earth. Verify that each scan tool D1/D2/R1/R2/S parameter displays low when earthed.
   If a parameter displays high when earthed, test that signal circuit terminal, as listed below, for a short to voltage or an open/high resistance. If the circuit tests normal, replace the T6 power inverter module.
   - Parameter D1 - terminal E
   - Parameter D2 - terminal F
   - Parameter R1 - terminal C
   - Parameter R2 - terminal D

- Parameter S - terminal B

6. If the circuits test normal, test or replace the transmission internal extension harness or the automatic transmission B15 internal mode switch.

Repair Instructions

Perform the Diagnostic Repair Verification after completing the repair.

- Manual Shift Shaft Position Switch and Fluid Level Control Valve Removal and Manual Shift Shaft Position Switch and Fluid Level Control Valve Installation for Internal Mode Switch replacement
- Automatic Transmission Wiring Harness and Output Speed Sensor Removal for Wiring Harness Extension Harness replacement
- Control Module References for Drive Motor Generator Power Inverter Module, also called the power inverter module, replacement, programming and set-up

&#169© Copyright Chevrolet. All rights reserved

DTC P183F

Diagnostic Instructions

- Perform the Diagnostic System Check - Vehicle prior to using this diagnostic procedure.
- Review Strategy Based Diagnosis for an overview of the diagnostic approach.
- Diagnostic Procedure Instructions provides an overview of each diagnostic category.

DTC Descriptor

DTC P183F: Internal Mode Switch 1-2 Correlation

Circuit/System Description

The hybrid powertrain control module compares the internal mode switch requested direction to other data to verify that the indicated direction range switch calculation is correct.

Conditions for Running the DTC

- The ignition is ON
- DTCs P181C-P181F, P1824, P182A-P182F, P183A-P183E, P1838, P1839, P184A or P184B are not set.

Conditions for Setting the DTC

The internal mode switch direction state does not match the internal mode switch range state.

Action Taken When the DTC Sets

DTC P183F is a Type A DTC.

Conditions for Clearing the DTC

DTC P183F is a Type A DTC.

Reference Information

Schematic Reference

Hybrid Controls Schematics

Connector End View Reference

Component Connector End Views

Electrical Information Reference

- Circuit Testing
- Connector Repairs
- Testing for Intermittent Conditions and Poor Connections
- Wiring Repairs

DTC Type Reference

Powertrain Diagnostic Trouble Code (DTC) Type Definitions

Scan Tool Reference

Control Module References for scan tool information

Circuit/System Verification

1. Verify that DTC P181C, P181D, P181E, P181F, P183A, P183B, P183C, P183D, P183E, P184A or P184B is not set.
   If any of the DTCs are set, refer to DTC P181C-P181F, P183A-P183E, P184A, or P184B .
2. Verify that DTC P183F is not set.
   If the DTC is set, program the hybrid powertrain control module. If the DTC resets, replace the T6 drive motor generator power inverter module.

Repair Instructions

Perform the Diagnostic Repair Verification after completing the repair.

Control Module References for Drive Motor Generator Power Inverter Module replacement, set-up and programming

&#169© Copyright Chevrolet. All rights reserved

DTC P1A4F, P1A50-P1A54, P1ADC or P1ADD

Diagnostic Instructions

- Perform the Diagnostic System Check - Vehicle prior to using this diagnostic procedure.
- Review Strategy Based Diagnosis for an overview of the diagnostic approach.
- Diagnostic Procedure Instructions provides an overview of each diagnostic category.

DTC Descriptor

DTC P1A4F: Drive Motor 1 Control Module Not Programmed

DTC P1A50: Drive Motor 1 Control Module Random Access Memory (RAM)

DTC P1A51: Drive Motor 1 Control Module Read Only Memory (ROM)

DTC P1A52: Drive Motor 2 Control Module Not Programmed

DTC P1A53: Drive Motor 2 Control Module Random Access Memory (RAM)

DTC P1A54: Drive Motor 2 Control Module Read Only Memory (ROM)

DTC P1ADC: Drive Motor 1 Control Module Long Term Memory Performance

DTC P1ADD: Drive Motor 2 Control Module Long Term Memory Performance

Circuit/System Description

The drive motor control modules are internal to the drive motor generator power inverter module assembly and are not serviced separately. This fault is handled inside the drive motor control modules and no external circuits are involved.

Conditions for Running the DTC

- The ignition is ON.
- Ignition voltage is 8-18 V.

Conditions for Setting the DTC

The control module has detected an internal malfunction.

Action Taken When the DTC Sets

- DTCs P1A4F, P1A50, P1A51, P1A52, P1A53, P1A54, P1ADC and P1ADD are Type A DTCs.
- The drive motor generator power inverter module commands the battery energy control module to open the high voltage contactor relays.

Conditions for Clearing the DTC

DTCs P1A4F, P1A50, P1A51, P1A52, P1A53, P1A54, P1ADC and P1ADD are Type A DTCs.

Reference Information

DTC Type Reference

Powertrain Diagnostic Trouble Code (DTC) Type Definitions

Circuit/System Verification

If the DTC is set, program the T6 drive motor generator power inverter module. If the DTC resets, replace the T6 drive motor generator power inverter module.

Repair Instructions

Perform the Diagnostic Repair Verification after completing the diagnostic procedure.

Control Module References for Drive Motor Generator Power Inverter Module replacement, set-up and programming.

&#169© Copyright Chevrolet. All rights reserved

DTC P1A71-P1A73

Diagnostic Instructions

- Perform the Diagnostic System Check - Vehicle prior to using this diagnostic procedure.
- Review Strategy Based Diagnosis for an overview of the diagnostic approach.
- Diagnostic Procedure Instructions provides an overview of each diagnostic category.

DTC Descriptor

DTC P1A71: 14 Volt Power Module Temperature Sensor 2 Performance

DTC P1A72: 14 Volt Power Module Temperature Sensor 2 Circuit Low Voltage

DTC P1A73: 14 Volt Power Module Temperature Sensor 2 Circuit High Voltage

Circuit/System Description

The 14 V power module, also called the accessory DC power control module, constantly monitors system temperature to protect against overheat conditions. The module also monitors the function of the temperature sensors. These sensors are internal to the accessory DC power control module and are not serviced separately from the control module.

Conditions for Running the DTC

The Vehicle is ON.

Conditions for Setting the DTC

DTC P1A71, P1A72 or P1A73: the sensor signal is out of range for more than 5 seconds.

Action Taken When the DTC Sets

DTCs P1A71, P1A72 and P1A73 are Type C DTCs.

Conditions for Clearing the DTC

DTCs P1A71, P1A72 and P1A73 are Type C DTCs.

Reference Information

DTC Type Reference

Powertrain Diagnostic Trouble Code (DTC) Type Definitions

Circuit/System Verification

If the DTC is set, program the K1 14V power module. If the DTC resets, replace the K1 14 V power module.

Repair Instructions

Perform the Diagnostic Repair Verification after completing the diagnostic procedure.

Control Module References for Accessory DC Power Control Module, also called the 14 V power module, replacement, programming and set-up.

&#169© Copyright Chevrolet. All rights reserved

DTC P1A90-P1A92

Diagnostic Instructions

- Perform the Diagnostic System Check - Vehicle prior to using this diagnostic procedure.
- Review Strategy Based Diagnosis for an overview of the diagnostic approach.
- Diagnostic Procedure Instructions provides an overview of each diagnostic category.

DTC Descriptor

DTC P1A90: 14 Volt Power Module Temperature Sensor 1 Performance

DTC P1A91: 14 Volt Power Module Temperature Sensor 1 Circuit Low Voltage

DTC P1A92: 14 Volt Power Module Temperature Sensor 1 Circuit High Voltage

Circuit/System Description

The 14 V power module, also called the accessory DC power control module, constantly monitors system temperature to protect against overheat conditions. The module also monitors the function of the temperature sensors. These sensors are internal to the 14 V power module and are not serviced separately from the control module.

Conditions for Running the DTC

The vehicle is ON.

Conditions for Setting the DTC

DTC P1A90, P1A91 or P1A92: the sensor signal is out of range for more than 5 seconds.

Action Taken When the DTC Sets

DTCs P1A90, P1A91 or P1A92 are Type C DTCs.

Conditions for Clearing the DTC

DTCs P1A90, P1A91 or P1A92 are Type C DTCs.

Reference Information

DTC Type Reference

Powertrain Diagnostic Trouble Code (DTC) Type Definitions

Circuit/System Verification

If the DTC is set, program the K1 14V power module. If the DTC resets, replace the K1 14 V power module.

Repair Instructions

Perform the Diagnostic Repair Verification after completing the diagnostic procedure.

Control Module References for Accessory DC Power Control Module, also called the 14 V power module, replacement, programming and set-up.

&#169© Copyright Chevrolet. All rights reserved

DTC P1ABC or P1ABD

Diagnostic Instructions

- Perform the Diagnostic System Check - Vehicle prior to using this diagnostic procedure.
- Review Strategy Based Diagnosis for an overview of the diagnostic approach.
- Diagnostic Procedure Instructions provides an overview of each diagnostic category.

DTC Descriptor

DTC P1ABC: 14 Volt Power Module Hybrid/EV Battery System Voltage Low Voltage

DTC P1ABD: 14 Volt Power Module Hybrid/EV Battery System Voltage High Voltage

Circuit/System Description

The 14 V power module, often referred to as the accessory DC power control module, constantly monitors system input and output voltage. This sensor is internal to the 14 V power module and is not serviced separately from the control module.

Conditions for Running the DTC

The Vehicle is ON and the hybrid/EV battery contactors are closed.

Conditions for Setting the DTC

- DTC P1ABC or P1ABD: the high-voltage sensor detects voltage less than 50V for 5 seconds.
- DTC P1ABD: the high-voltage sensor detects voltage greater than 500 V for 5 seconds.

Action Taken When the DTC Sets

DTCs P1ABC and P1ABD are Type C DTCs.

Conditions for Clearing the DTC

DTCs P1ABC and P1ABD are Type C DTCs.

Reference Information

DTC Type Reference

Powertrain Diagnostic Trouble Code (DTC) Type Definitions

Circuit/System Verification

1. Verify that DTC P0562 or P0563 are not set.
   If DTC P0562 or P0563 is set, refer to DTC B1325, B1330, B1517, C0800, C0899, C0900, C12E1, C12E2, P0562, P0563, P1A0C, P1A0D, or P1EFC .
2. If the DTC is set, program the K1 14V power module. If the DTC resets, replace the K1 14 V power module.

Repair Instructions

Perform the Diagnostic Repair Verification after completing the diagnostic procedure.

Control Module References for Accessory DC Power Control Module, also called the 14 V power module, replacement, programming and set-up.

&#169© Copyright Chevrolet. All rights reserved

DTC P1ADE, P1ADF, P1AE0 or P1AE1

Diagnostic Instructions

- Perform the Diagnostic System Check - Vehicle prior to using this diagnostic procedure.
- Review Strategy Based Diagnosis for an overview of the diagnostic approach.
- Diagnostic Procedure Instructions provides an overview of each diagnostic category.

DTC Descriptor

DTC P1ADE: Drive Motor 1 Control Module System Voltage Low Voltage

DTC P1ADF: Drive Motor 1 Control Module System Voltage High Voltage

DTC P1AE0: Drive Motor 2 Control Module System Voltage Low Voltage

DTC P1AE1: Drive Motor 2 Control Module System Voltage High Voltage

Circuit/System Description

The power inverter module, often referred to as the drive motor generator power inverter module, contains three motor control modules and the hybrid powertrain control module. Two of the motor control modules operate their respective drive motor generator based upon power inverter module commands. The third motor control module controls the auxiliary transmission fluid pump motor. The hybrid powertrain control module and the motor control modules share the power inverter module ignition voltage circuit, battery voltage circuits and chassis earth.

Conditions for Running the DTC

The Vehicle is ON.

Conditions for Setting the DTC

DTCs P1ADE and P1AE0

Motor control module ignition voltage is less than or equal to 10 V for 5 seconds.

DTCs P1ADF and P1AE1

Motor control module ignition voltage is greater than 18 volts for 5 seconds.

Action Taken When the DTC Sets

DTCs P1ADE, P1ADF, P1AE0 and P1AE1 are Type C DTCs.

Conditions for Clearing the DTC

DTCs P1ADE, P1ADF, P1AE0 and P1AE1 are Type C DTCs.

Diagnostic Aids

A battery charger or vehicle jump start may have set DTCs P1ADF or P1AE1.

Reference Information

DTC Type Reference

Powertrain Diagnostic Trouble Code (DTC) Type Definitions

Circuit/System Verification

1. Verify that DTCs P0562 or P0563 are not set.
   If DTC P0562 or P0563 is set, refer to DTC B1325, B1330, B1517, C0800, C0899, C0900, C12E1, C12E2, P0562, P0563, P1A0C, P1A0D, or P1EFC .
2. If the DTC is set, program the T6 power inverter module. If the DTC resets, replace the T6 power inverter module.

Repair Instructions

Perform the Diagnostic Repair Verification after completing the diagnostic procedure.

Control Module References for Drive Motor Generator Power Inverter Module, also called the power inverter module, replacement, programming and set-up.

&#169© Copyright Chevrolet. All rights reserved

DTC P1AE8, P1AE9, P1AEA or P1AEB

Diagnostic Instructions

- Perform the Diagnostic System Check - Vehicle prior to using this diagnostic procedure.
- Review Strategy Based Diagnosis for an overview of the diagnostic approach.
- Diagnostic Procedure Instructions provides an overview of each diagnostic category.

DTC Descriptor

DTC P1AE8: Drive Motor 1 Control Module Hybrid Battery Voltage Sense Circuit Low Voltage

DTC P1AE9: Drive Motor 1 Control Module Hybrid Battery Voltage Sense Circuit High Voltage

DTC P1AEA: Drive Motor 2 Control Module Hybrid Battery Voltage Sense Circuit Low Voltage

DTC P1AEB: Drive Motor 2 Control Module Hybrid Battery Voltage Sense Circuit High Voltage

Circuit/System Description

The drive motor generator power inverter module contains two drive motor control modules. Each drive motor control module monitors its internal high voltage sensor for correct operation, no external circuits are involved. The modules listed below are part of the drive motor generator power inverter module and are not serviced separately.

- Hybrid powertrain control module
- Motor control module 1
- Motor control module 2

Conditions for Running the DTC

- Ignition is ON.
- The system voltage is 8-18 V.
- The high voltage contactor relays are closed.

Conditions for Setting the DTC

P1AE8 and P1AEA

The drive motor control module detects high-voltage sensor voltage below 0V.

P1AE9 and P1AEB

The drive motor control module detects high-voltage sensor voltage above 564 V. Cert Doc = 500 V.

Action Taken When the DTC Sets

- DTCs P1AE8, P1AE9, P1AEA and P1AEB are Type B DTCs.
- The hybrid powertrain control module commands the battery energy control module to open the high voltage contactor relays.

Conditions for Clearing the DTC

DTCs P1AE8, P1AE9, P1AEA and P1AEB are Type B DTCs.

Reference Information

DTC Type Reference

Powertrain Diagnostic Trouble Code (DTC) Type Definitions

Circuit/System Verification

If the DTC is set, program the T6 drive motor generator power inverter module. If the DTC resets, replace the T6 drive motor generator power inverter module.

Repair Instructions

Perform the Diagnostic Repair Verification after completing the diagnostic procedure.

Control Module References for Drive Motor Generator Power Inverter Module replacement, set-up and programming.

&#169© Copyright Chevrolet. All rights reserved

DTC P1AEC-P1AEF

Diagnostic Instructions

- Perform the Diagnostic System Check - Vehicle prior to using this diagnostic procedure.
- Review Strategy Based Diagnosis for an overview of the diagnostic approach.
- Diagnostic Procedure Instructions provides an overview of each diagnostic category.

DTC Descriptors

DTC P1AEC: Drive Motor 1 Control Module Hybrid/EV Battery System Voltage

DTC P1AED: Drive Motor 2 Control Module Hybrid/EV Battery System Voltage

DTC P1AEE: Drive Motor 1 Control Module Hybrid/EV Battery System Voltage High

DTC P1AEF: Drive Motor 2 Control Module Hybrid/EV Battery System Voltage High

Circuit/System Description

The power inverter module, also called the drive motor generator power inverter module, contains two motor control modules. Each motor control modules measures hybrid battery high voltage with several internal sensors. The hybrid powertrain control module 2 also monitors high voltage with several internal sensors. The hybrid powertrain control module 2 high voltage measurement is broadcast over serial data.

P1AEC and P1AED

The motor control modules compare the values in order to verify the hybrid battery high voltage measurement is accurate.

P1AEE and P1AEF

The motor control modules monitors for high voltage that is greater than the system allows during normal operation.

Conditions for Running the DTC

- The hybrid/EV battery system contactor relays are closed.
- Ignition voltage is 8 V and no more than 18 V.

P1AEC

DTCs P1AE8 or P1AE9 are not set.

P1AED

DTCs P1AEA or P1AEB are not set.

Conditions for Setting the DTC

P1AEC and P1AED

A difference of more than 40 V on the high-voltage circuit is detected between the hybrid powertrain control module and the hybrid powertrain control module 2.

AND

A difference of more than 50 V on the high-voltage circuit is detected between the motor control module and the hybrid powertrain control module 2.

P1AEE and P1AEF

More than 425 V on the high-voltage circuit is detected by the motor control module.

Action Taken When the DTC Sets

- DTCs P1AEC and P1AED are Type B DTCs.
- DTCs P1AEE and P1AEF are Type A DTCs.
- The power inverter module requests the hybrid powertrain control module 2 to open the high voltage contactor relays.

Conditions for Clearing the DTC

- DTCs P1AEC and P1AED are Type B DTCs.
- DTCs P1AEE and P1AEF are Type A DTCs.

Diagnostic Aids

Conditions such as loss of battery energy control module power or earth or removal of the high-voltage manual disconnect while the vehicle was being driven could create a voltage surge that may set DTCs P1AEE and P1AEF. History DTCs P1AEE and P1AEF may indicate that the high-voltage contactor relays opened while large current flow was present.

Reference Information

DTC Type Reference

Powertrain Diagnostic Trouble Code (DTC) Type Definitions

Circuit/System Verification

1. Verify that DTCs P0ABB, P0ABC or P0ABD are not set.
   If any of the DTCs are set, refer to Diagnostic Trouble Code (DTC) List - Vehicle .
2. If the DTC is set, program the hybrid powertrain control module. If the DTC resets, replace the T6 power inverter module.

Repair Instructions

Perform the Diagnostic Repair Verification after completing the diagnostic procedure.

Control Module References for Drive Motor Generator Power Inverter module, also called the power inverter module, replacement, programming and set-up.

&#169© Copyright Chevrolet. All rights reserved

DTC P1AF0 or P1AF2

Diagnostic Instructions

- Perform the Diagnostic System Check - Vehicle prior to using this diagnostic procedure.
- Review Strategy Based Diagnosis for an overview of the diagnostic approach.
- Diagnostic Procedure Instructions provides an overview of each diagnostic category.

DTC Descriptor

DTC P1AF0: Drive Motor 1 Control Module Hybrid Battery/EV Voltage System Isolation Lost

DTC P1AF2: Drive Motor 2 Control Module Hybrid Battery/EV Voltage System Isolation Lost

Circuit/System Description

The power inverter module, often referred to as the drive motor generator power inverter module, contains three motor control modules and the hybrid powertrain control module. Two of the motor control modules operate their respective drive motor generator based upon power inverter module commands. The third motor control module controls the auxiliary transmission fluid pump motor. Each motor control module measures hybrid battery high voltage with several internal sensors. The motor control modules test for loss of isolation between either the high-voltage positive circuit or high-voltage negative circuit and vehicle chassis. The motor control modules test for isolation when the high-voltage contactor relays are closed. The hybrid powertrain control module 2 only tests the hybrid battery assembly for high-voltage loss of isolation when the high-voltage contactor relays are open.

Motor control modules' loss of isolation is detected through the use of two high-impedance resistors and voltage measuring circuitry. The two resistors are connected in series between the high- voltage positive and high-voltage negative circuits. The centre connection of the two resistors is also connected to vehicle chassis. The motor control module then measures the voltage drop across one of the resistors. Without a loss of isolation, the motor control module should measure about half of the high voltage potential. This is referred to as mid-pack voltage. The Mid-pack voltage value is then doubled by the software and displayed on a scan tool as Motor 1 Isolation Voltage or Motor 2 Isolation Voltage. When a loss of isolation is present, the motor isolation voltage display will indicate voltage that is more or less than actual hybrid battery high voltage.

Conditions for Running the DTC

- The high voltage contactor relays are closed.

- High voltage is greater than 50 V.
- Ignition voltage is 8-18 V.
- DTCs P1AE8, P1AE9, P1AEA, P1AEB, P1AEC or P1AED are not set.

Conditions for Setting the DTC

The ratio between negative Mid-Pack Voltage and positive Mid-Pack Voltage is greater than 4.53 for greater than 5 seconds.

Action Taken When the DTC Sets

DTCs P1AF0 and P1AF2 are Type B DTCs.

Conditions for Clearing the DTC

DTCs P1AF0 and P1AF2 are Type B DTCs.

Reference Information

Schematic Reference

Hybrid Controls Schematics

Connector End View Reference

Component Connector End Views

Electrical Information Reference

- Circuit Testing
- Connector Repairs
- Testing for Intermittent Conditions and Poor Connections
- Wiring Repairs

DTC Type Reference

Powertrain Diagnostic Trouble Code (DTC) Type Definitions

Scan Tool Reference

Control Module References for scan tool information

Circuit/System Verification

1. Verify that DTC P1F0E is not set.
   If the DTC is set, refer to DTC P0AA6, P1AE6 or P1F0E .
2. Verify that DTC P0A78, P0A79, P0BFD, P0BFE, P0C01 or P0C04 is not set.
   If any of the DTCs are set, refer to Diagnostic Trouble Code (DTC) List - Vehicle .
3. Refer to Loss of Isolation on the High-Voltage Main Bus . If all circuits test normal, replace the T6 power inverter module.

Repair Instructions

Perform the Diagnostic Repair Verification after completing the diagnostic procedure.

Control Module References for Drive Motor Generator Power Inverter Module, also called the power inverter module, and the Accessory DC Power Control Module, also called the 14 V power module, replacement, programming and set-up.

&#169© Copyright Chevrolet. All rights reserved

DTC P1AF4-P1AF7

Diagnostic Instructions

- Perform the Diagnostic System Check - Vehicle prior to using this diagnostic procedure.
- Review Strategy Based Diagnosis for an overview of the diagnostic approach.
- Diagnostic Procedure Instructions provides an overview of each diagnostic category.

DTC Descriptor

DTC P1AF4: Drive Motor 1 Control Module Hybrid/EV Battery Voltage Isolation Sensing Circuit Low Voltage

DTC P1AF5: Drive Motor 1 Control Module Hybrid/EV Battery Voltage Isolation Sensing Circuit High Voltage

DTC P1AF6: Drive Motor 2 Control Module Hybrid/EV Battery Voltage Isolation Sensing Circuit Low Voltage

DTC P1AF7: Drive Motor 2 Control Module Hybrid/EV Battery Voltage Isolation Sensing Circuit High Voltage

Circuit/System Description

The power inverter module, often referred to as the drive motor generator power inverter module, contains two motor control modules. Each motor control module measures hybrid battery high voltage with several internal sensors. The motor control modules test for loss of isolation between either the high-voltage positive circuit or high-voltage negative circuit and vehicle chassis. The motor control modules test for isolation when the high-voltage contactor relays are closed. The hybrid powertrain control module 2 only tests the hybrid battery assembly for high-voltage loss of isolation when the high-voltage contactor relays are open.

Motor control module loss of isolation is detected through the use of two high-impedance resistors and voltage measuring circuitry. The two resistors are connected in series between the high- voltage positive and high-voltage negative circuits. The centre connection of the two resistors is also connected to vehicle chassis. The motor control module then measures the voltage drop across one of the resistors. Without a loss of isolation, the motor control module should measure about half of the high voltage potential. This is referred to as mid-pack voltage. The Mid-pack voltage value is then doubled by the software and displayed on a scan tool as Motor 1 Isolation Voltage or Motor 2 Isolation Voltage. When a loss of isolation is present, the motor isolation voltage display will indicate voltage that is more or less than actual hybrid battery high voltage. The motor control module monitors the loss of isolation voltage measuring circuitry for correct operation.

Conditions for Running the DTC

P1AF4 and P1AF6

- The Vehicle is ON.
- The hybrid/EV contactors are closed.

P1AF5 and P1AF7

- The Vehicle is ON.
- DTCs P1AE8 or P1AE9 not set.

Conditions for Setting the DTC

P1AF4 and P1AF6

The motor control module detects isolation sensor voltage less than 20V.

P1AF5 and P1AF7

The motor control module detects the value of the mid-pack voltage subtracted from the pack voltage is greater than 40V.

Action Taken When the DTC Sets

- DTCs P1AF4, P1AF5, P1AF6 and P1AF7 are Type B DTCs.
- The hybrid powertrain control module requests the hybrid powertrain control module 2 to open the high-voltage contactor relays.

Conditions for Clearing the DTC

DTCs P1AF4, P1AF5, P1AF6 and P1AF7 are Type B DTCs.

Reference Information

DTC Type Reference

Powertrain Diagnostic Trouble Code (DTC) Type Definitions

Circuit/System Verification

1. Verify that DTC P0AA6 is not set.

If the DTC is set, refer to DTC P0AA6, P1AE6 or P1F0E .

2. Verify that DTCs P1AF4, P1AF5, P1AF6 or P1AF7 are not set.
   If the DTC is set, program the T6 power inverter module with the latest software version. If the DTC resets replace the T6 power inverter module.

Repair Instructions

Perform the Diagnostic Repair Verification after completing the diagnostic procedure.

Control Module References for Drive Motor Generator Power Inverter Module, also called the power inverter module, replacement, programming and set-up.

&#169© Copyright Chevrolet. All rights reserved

DTC P1B0B or P1B0C

Diagnostic Instructions

- Perform the Diagnostic System Check - Vehicle prior to using this diagnostic procedure.
- Review Strategy Based Diagnosis for an overview of the diagnostic approach.
- Diagnostic Procedure Instructions provides an overview of each diagnostic category.

DTC Descriptor

DTC P1B0B: Drive Motor 1 Control Module Hybrid/EV Battery Voltage Isolation Sensing Circuit 2 Low Voltage

DTC P1B0C: Drive Motor 1 Control Module Hybrid Battery Voltage Isolation Sensing Circuit 2 High Voltage

Circuit/System Description

The power inverter module, often referred to as the drive motor generator power inverter module, contains two motor control modules. Each motor control module measures hybrid battery high voltage with several internal sensors. The motor control modules test for loss of isolation between either the high-voltage positive circuit or high-voltage negative circuit and vehicle chassis. The motor control modules test for isolation when the high-voltage contactor relays are closed. The hybrid powertrain control module 2 only tests the hybrid battery assembly for high-voltage loss of isolation when the high-voltage contactor relays are open.

Motor control module loss of isolation is detected through the use of two high-impedance resistors and voltage measuring circuitry. The two resistors are connected in series between the high- voltage positive and high-voltage negative circuits. The centre connection of the two resistors is also connected to vehicle chassis. The motor control module then measures the voltage drop across one of the resistors. Without a loss of isolation, the motor control module should measure about half of the high voltage potential. This is referred to as mid-pack voltage. The Mid-pack voltage value is then doubled by the software and displayed on a scan tool as Motor 1 Isolation Voltage or Motor 2 Isolation Voltage. When a loss of isolation is present, the motor isolation voltage display will indicate voltage that is more or less than actual hybrid battery high voltage. The motor control module monitors the loss of isolation voltage measuring circuitry for correct operation.

Conditions for Running the DTC

The vehicle is ON.

P1B0C

DTC P1AE8 or P1AE9 is not set.

Conditions for Setting the DTC

P1B0B

The motor control module detects isolation sensor voltage less than 20 V.

P1B0C

The motor control module detects isolation sensor voltage greater than 40 V.

Action Taken When the DTC Sets

- DTCs P1B0B and P1B0C are Type B DTCs.
- The hybrid powertrain control module requests the hybrid powertrain control module 2 to open the high-voltage contactor relays.

Conditions for Clearing the DTC

DTCs P1B0B and P1B0C are Type B DTCs.

Reference Information

Schematic Reference

Hybrid Controls Schematics

Connector End View Reference

Component Connector End Views

Electrical Information Reference

- Circuit Testing
- Connector Repairs
- Testing for Intermittent Conditions and Poor Connections
- Wiring Repairs

DTC Type Reference

Powertrain Diagnostic Trouble Code (DTC) Type Definitions

Scan Tool Reference

Control Module References for scan tool information

Repair Instructions

If DTC P1B0B or P1B0C is set, refer to Loss of Isolation on the High-Voltage Main Bus .

Perform the Diagnostic Repair Verification after completing the diagnostic procedure.

&#169© Copyright Chevrolet. All rights reserved

DTC P1B0D or P1B0E

Diagnostic Instructions

- Perform the Diagnostic System Check - Vehicle prior to using this diagnostic procedure.
- Review Strategy Based Diagnosis for an overview of the diagnostic approach.
- Diagnostic Procedure Instructions provides an overview of each diagnostic category.

DTC Descriptor

DTC P1B0D: Drive Motor 1 Control Module Drive Motor 1 Overspeed

DTC P1B0E: Drive Motor 2 Control Module Drive Motor 2 Overspeed

Circuit/System Description

The drive motor position sensor is monitored by the drive motor control module. The drive motor control module monitors the angular position, speed and direction of the drive motor based on the signals of the resolver-type position sensor. The position sensor allows the drive motor control module to determine the exact position, speed and direction of the drive motor. The motor control modules are part of the power inverter module, often referred to as the drive motor generator power inverter module and are not serviced separately.

Conditions for Running the DTC

- Vehicle is ON.
- Drive motor control module temperature and voltage out of range DTCs have not set.

Conditions for Setting the DTC

P1B0D

Drive motor 1 speed is greater than 6,300 RPM.

P1B0E

Drive motor 2 speed is greater than 9,500 RPM.

Action Taken When the DTC Sets

- DTCs P1B0D and P1B0E are Type A DTCs.
- The hybrid powertrain control module requests the hybrid powertrain control module 2 to open the high-voltage contactor relays.

Conditions for Clearing the DTC

DTCs P1B0D and P1B0E are Type A DTCs.

Diagnostic Aids

- The drive axle and drive motor 2 are connected mechanically through a planetary gear set, any condition that allows the front wheel drive shaft to rotate too fast while the transmission is in gear may cause DTC P1B0E to set. Ask the operator if the vehicle was subjected to downhill coasting at an excessive speed.
- A transmission mechanical failure that occurs during high drive motor generator torque may cause these DTCs to set.
- Repeated drive motor generator operation at speeds in excess of the DTC limits may cause deterioration of the drive motor generator magnets.

Reference Information

DTC Type Reference

Powertrain Diagnostic Trouble Code (DTC) Type Definitions

Circuit/System Verification

1. Verify there are no hybrid Transmission DTCs set.
   If other Hybrid Transmission DTCs are set, refer to Diagnostic Trouble Code (DTC) List - Vehicle .
2. Program the T6 power inverter module with the latest software version. If the DTC resets replace the T6 power inverter module.

Repair Instructions

Perform the Diagnostic Repair Verification after completing the diagnostic procedure.

Control Module References for Drive Motor Generator Power Inverter Module, also called the power inverter module, replacement, programming and set-up.

&#169© Copyright Chevrolet. All rights reserved

DTC P1B0F or P1B10

Diagnostic Instructions

- Perform the Diagnostic System Check - Vehicle prior to using this diagnostic procedure.
- Review Strategy Based Diagnosis for an overview of the diagnostic approach.
- Diagnostic Procedure Instructions provides an overview of each diagnostic category.

DTC Descriptors

DTC P1B0F: Drive Motor 1 Position Learn Incorrect

DTC P1B10: Drive Motor 2 Position Learn Incorrect

Circuit/System Description

The drive motor position sensor is monitored by the drive motor control module. The drive motor control module monitors the angular position, speed and direction of the drive motor generator rotor based on the signals of the resolver-type position sensor. The position sensor contains a drive coil, two driven coils and an irregular shaped metallic rotor. The metallic rotor is mechanically attached to the shaft of the drive motor generator. At vehicle ON, the motor control module outputs a 7 volt ac, 10 kHz excitation signal to the drive coil. The drive coil excitation signal creates a magnetic field surrounding the two driven coils and the irregular shaped rotor. The motor control module then monitors the two driven coil circuits for a return signal. The position of the irregular metallic rotor causes the magnetically-induced return signals of the driven coils to vary in size and shape. A comparison of the two driven coils signals allows the motor control module to determine the exact position, speed and direction of the drive motor rotor. The position sensor is a non-serviceable part of the drive motor.

A measurement called offset is needed for accurate determination of the motor position. Offset is the relationship between the position sensor and the drive motor generator output shaft. Whenever the vehicle is cycled to OFF, the motor control module attempts to learn the offset of the drive motor position sensor by rapidly oscillating the motor and observing the position sensor signals.

Conditions for Running the DTC

Condition 1, 2, 3 and 4

- Hybrid wake-up signal is not active following a vehicle power mode transition from ON to OFF.

- The motor control module has learned a valid drive motor position sensor offset value at least once.

Condition 2

Motor speed is less than 20 RPM.

Conditions for Setting the DTC

Condition 1

Position sensor offset value not learned because drive motor speed is greater than 50 RPM.

Condition 2

Position sensor offset value not learned because hybrid battery voltage as observed at the motor control module is less than 192 V.

Condition 3

Position sensor offset value not learned because drive motor phase to phase current difference is less than 15 A.

Condition 4

Position sensor offset value not learned because the offset learn value is greater than the maximum allowed offset of 25 degrees.

Action Taken When the DTC Sets

- DTCs P1B10 and P1B0F are Type C DTCs.
- The motor control module operates the drive motor generator using the last valid learned offset.

Conditions for Clearing the DTC

- DTCs P1B10 and P1B0F are Type C DTCs.
- High voltage remains enabled immediately following a vehicle power mode transition from ON to OFF.

Diagnostic Aids

If the vehicle is powered-off while driving these DTCs may set.

Reference Information

Scan Tool Reference

Control Module References for scan tool information

Circuit/System Verification

1. Vehicle ON, verify that DTCs P0A40, P0A45, P0A46, P0A78, P0A79, P0A3F, P0C05, P0C08, P0C0B, P0C0E, P0C4E, P0C4F, P0C52, P0C53, P0C57, P0C58, P0C61, P0C62, P0C5C, P0C5D, P1B03, P1B04 or P1B0D is not set.
   If DTC is set, refer to Diagnostic Trouble Code (DTC) List - Vehicle .
2. Vehicle in Service Mode, observe the scan tool Hybrid Powertrain Control Module 2 contactor system status parameter. The status should display closed.
   If not the specified value, refer to Symptoms - Hybrid Controls .
3. Cycle the vehicle OFF for 2 minutes, ON for 2 minutes then OFF for at least 10 seconds.
4. If the DTC is set, program the T6 power inverter module. If the DTC resets, replace the appropriate M15 drive motor with generator assembly.

Repair Instructions

Perform the Diagnostic Repair Verification after completing the diagnostic procedure.

- Drive Motor Generator Rotor and Stator Removal - Unit A for Drive Motor 1 replacement
- Drive Motor Generator Rotor and Stator Removal - Unit B for Drive Motor 2 replacement
- Control Module References for Drive Motor Generator Power Inverter Module, also called the power inverter module, replacement, programming and set-up.

&#169© Copyright Chevrolet. All rights reserved

DTC P1B15

Diagnostic Instructions

- Perform the Diagnostic System Check - Vehicle prior to using this diagnostic procedure.
- Review Strategy Based Diagnosis for an overview of the diagnostic approach.
- Diagnostic Procedure Instructions provides an overview of each diagnostic category.

DTC Descriptor

DTC P1B15: Regenerative Braking Torque Request Signal Message Counter Incorrect

Circuit/System Description

This diagnostic applies to internal microprocessor integrity conditions within the hybrid powertrain control module. The hybrid powertrain control module is internal to the power inverter module, often referred to as the drive motor generator power inverter module and is not serviced separately. The hybrid powertrain control module monitors its ability to read and write to the memory. The hybrid powertrain control module processor monitors the data to verify that the indicated brake torque request calculation is correct.

Conditions for Running the DTC

- The vehicle is ON for 1 second.
- The system voltage is 8-18 V.

Conditions for Setting the DTC

The control module has detected an internal malfunction.

Action Taken When the DTC Sets

- DTC P1B15 is a Type A DTC.
- The hybrid powertrain control module requests the hybrid powertrain control module 2 to open the high-voltage contactor relays.

Conditions for Clearing the DTC

DTC P1B15 is a Type A DTC.

Reference Information

DTC Type Reference

Powertrain Diagnostic Trouble Code (DTC) Type Definitions

Circuit/System Verification

If the DTC is set, program the T6 power inverter module. If the DTC resets, replace the T6 power inverter module.

Repair Instructions

Perform the Diagnostic Repair Verification after completing the diagnostic procedure.

Control Module References for Drive Motor Generator Power Inverter Module, also called the power inverter module, replacement, programming and set-up.

&#169© Copyright Chevrolet. All rights reserved

DTC P1B41 or P1B42

Diagnostic Instructions

- Perform the Diagnostic System Check - Vehicle prior to using this diagnostic procedure.
- Review Strategy Based Diagnosis for an overview of the diagnostic approach.
- Diagnostic Procedure Instructions provides an overview of each diagnostic category.

DTC Descriptor

DTC P1B41: Drive Motor 1 Control Module Hybrid/EV Battery Voltage Isolation Sensing Performance

DTC P1B42: Drive Motor 2 Control Module Hybrid/EV Battery Voltage Isolation Sensing Performance

Circuit/System Description

The power inverter module, often referred to as the drive motor generator power inverter module, contains two drive motor control modules. Each drive motor control module monitors its internal high voltage sensor for correct operation, no external circuits are involved. The modules listed below are part of the power inverter module and are not serviced separately:

- Hybrid powertrain control module
- Motor control module 1
- Motor control module 2
- Auxiliary transmission fluid pump control module

Conditions for Running the DTC

- The vehicle is ON.
- The system voltage is 8-18 V.
- The high voltage contactor relays are closed.

P1B41

DTC P1AE8, P1AE9, P1B0B or P1B0C is not set.

P1B42

DTC P1AEA, P1AEB, P1B43 or P1B44 is not set.

Conditions for Setting the DTC

The difference between the voltage sensed and hybrid battery voltage is greater than 40V.

And

The difference between the voltage sensed and the high voltage measured is greater than 50V.

Action Taken When the DTC Sets

- DTCs P1B41 and P1B42 are Type B DTCs.
- The hybrid powertrain control module requests the hybrid powertrain control module 2 to open the high-voltage contactor relays.

Conditions for Clearing the DTC

DTCs P1B41 and P1B42 are Type B DTCs.

Reference Information

DTC Type Reference

Powertrain Diagnostic Trouble Code (DTC) Type Definitions

Circuit/System Verification

If the DTC is set, program the T6 power inverter module. If the DTC resets, replace the T6 power inverter module.

Repair Instructions

Perform the Diagnostic Repair Verification after completing the diagnostic procedure.

Control Module References for Drive Motor Generator Power Inverter Module, also called the power inverter module, replacement, programming and set-up.

&#169© Copyright Chevrolet. All rights reserved

DTC P1B43 or P1B44

Diagnostic Instructions

- Perform the Diagnostic System Check - Vehicle prior to using this diagnostic procedure.
- Review Strategy Based Diagnosis for an overview of the diagnostic approach.
- Diagnostic Procedure Instructions provides an overview of each diagnostic category.

DTC Descriptor

DTC P1B43: Drive Motor 2 Control Module Hybrid/EV Battery Voltage Isolation Sensor Circuit 2 Low Voltage

DTC P1B44: Drive Motor 2 Control Module Hybrid/EV Battery Voltage Isolation Sensor Circuit 2 High Voltage

Circuit/System Description

The power inverter module, often referred to as the drive motor generator power inverter module, contains two drive motor control modules. Each drive motor control module monitors its internal high voltage sensor for correct operation, no external circuits are involved. The modules listed below are part of the power inverter module and are not serviced separately:

- Hybrid powertrain control module
- Motor control module 1
- Motor control module 2
- Auxiliary transmission fluid pump control module

Conditions for Running the DTC

- The vehicle is ON.
- The system voltage is 8-18 V.
- The high voltage contactor relays are closed.

Conditions for Setting the DTC

P1B43

The drive motor control module detects isolation sensor voltage less than 20 V.

P1B44

The drive motor control module detects isolation sensor voltage greater than 40 V.

Action Taken When the DTC Sets

- DTCs P1B43 and P1B44 are Type B DTCs.
- The hybrid powertrain control module requests the hybrid powertrain control module 2 to open the high-voltage contactor relays.

Conditions for Clearing the DTC

DTCs P1B43 and P1B44 are Type B DTCs.

Reference Information

DTC Type Reference

Powertrain Diagnostic Trouble Code (DTC) Type Definitions

Circuit/System Verification

If the DTC is set, program the T6 power inverter module. If the DTC resets, replace the T6 power inverter module.

Repair Instructions

Perform the Diagnostic Repair Verification after completing the diagnostic procedure.

Control Module References for Drive Motor Generator Power Inverter Module, also called the power inverter module, replacement, programming and set-up.

&#169© Copyright Chevrolet. All rights reserved

DTC P1BFF or P1E23-P1E25

Diagnostic Instructions

- Perform the Diagnostic System Check - Vehicle prior to using this diagnostic procedure.
- Review Strategy Based Diagnosis for an overview of the diagnostic approach.
- Diagnostic Procedure Instructions provides an overview of each diagnostic category.

DTC Descriptor

DTC P1BFF: Auxiliary Transmission Fluid Pump Motor Control Module Not Programmed

DTC P1E23: Auxiliary Transmission Fluid Pump Control Module Random Access Memory

DTC P1E24: Auxiliary Transmission Fluid Pump Control Module Long Term Memory Performance

DTC P1E25: Auxiliary Transmission Fluid Pump Control Module Read Only Memory

Circuit/System Description

This is an internal fault detection of the auxiliary transmission fluid pump control module. The modules listed below are internal to the power inverter module and are not serviced separately. These faults are handled inside the hybrid powertrain control module and no external circuits are involved.

- Auxiliary transmission fluid pump control module
- Drive motor control module 1
- Drive motor control module 2
- Hybrid powertrain control module

Conditions for Running the DTC

- The vehicle is ON.
- The system voltage is 8-18 V.

Conditions for Setting the DTC

The control module has detected an internal malfunction or a control module was not programmed after replacement.

Action Taken When the DTC Sets

- DTCs P1BFF P1E23, P1E24, and P1E25 are Type A DTCs.
- The hybrid powertrain control module requests the hybrid powertrain control module 2 to open the high-voltage contactor relays.

Conditions for Clearing the DTC

DTCs P1BFF P1E23, P1E24, and P1E25 are Type A DTCs.

Reference Information

DTC Type Reference

Powertrain Diagnostic Trouble Code (DTC) Type Definitions

Circuit/System Verification

1. Verify that DTC P0562 is not set.
   If DTC is set, refer to DTC B1325, B1330, B1517, C0800, C0899, C0900, C12E1, C12E2, P0562, P0563, P1A0C, P1A0D, or P1EFC .
2. If the DTC is set, program the T6 power inverter module. If the DTC resets, replace the T6 power inverter module.

Repair Instructions

Perform the Diagnostic Repair Verification after completing the diagnostic procedure.

Control Module References for Drive Motor Generator Power Inverter Module, also called the power inverter module, replacement, programming and set-up

&#169© Copyright Chevrolet. All rights reserved

DTC P1E0A or P1E0B

Diagnostic Instructions

- Perform the Diagnostic System Check - Vehicle prior to using this diagnostic procedure.
- Review Strategy Based Diagnosis for an overview of the diagnostic approach.
- Diagnostic Procedure Instructions provides an overview of each diagnostic category.

DTC Descriptor

DTC P1E0A: Drive Motor 1 Control Module Module Torque Calculation Performance

DTC P1E0B: Drive Motor 2 Control Module Module Torque Calculation Performance

Circuit/System Description

The motor control modules perform redundant calculations of desired and achieved torque values. These values are continuously compared and should always be the same.

Conditions for Running the DTC

Ignition voltage is 8-18 V.

Conditions for Setting the DTC

The redundant torque calculation does not match the primary calculation.

Action Taken When the DTC Sets

- DTCs P1E0A and P1E0B are Type A DTCs.
- The hybrid powertrain control module requests the hybrid powertrain control module 2 to open the high-voltage contactor relays.

Conditions for Clearing the DTC

DTCs P1E0A and P1E0B are Type A DTCs.

Reference Information

DTC Type Reference

Powertrain Diagnostic Trouble Code (DTC) Type Definitions

Circuit/System Verification

1. Verify there is no transmission or motor control module DTCs set.
   If other Transmission or motor control module DTCs are set, refer to Diagnostic Trouble Code (DTC) List - Vehicle .
2. Program the T6 power inverter module with the latest software version. If the DTC resets replace the T6 power inverter module.

Repair Instructions

Perform the Diagnostic Repair Verification after completing the diagnostic procedure.

Control Module References for Drive Motor Generator Power Inverter Module, also called the power inverter module, replacement, programming and set-up.

&#169© Copyright Chevrolet. All rights reserved

DTC P1E0E

Diagnostic Instructions

- Perform the Diagnostic System Check - Vehicle prior to using this diagnostic procedure.
- Review Strategy Based Diagnosis for an overview of the diagnostic approach.
- Diagnostic Procedure Instructions provides an overview of each diagnostic category.

DTC Descriptor

DTC P1E0E: 14 V Power Module Not Programmed

Conditions for Running the DTC

- The vehicle is ON.
- Ignition voltage is greater than 10 volts.

Conditions for Setting the DTC

A new service replacement 14 V power module, also called the accessory DC power control module, contains a unique manufacturing calibration. This DTC will be current when a new 14 V power module is installed on a vehicle prior to the Service Programming System (SPS) event. The DTC will remain current until the 14 V power module has undergone a successful program. Once the program event is completed, the DTC goes into history and can be cleared.

Action Taken When the DTC Sets

- The auxiliary power module stops supplying power to the 12 V system.
- DTC P1E0E is a Type C DTC.

Conditions for Clearing the DTC

DTC P1E0E is a Type C DTC.

Reference Information

DTC Type Reference

Powertrain Diagnostic Trouble Code (DTC) Type Definitions

Description and Operation

Accessory DC Power Control Module Description and Operation

Circuit/System Verification

If the DTC is set, program the K1 14V power module. If the DTC resets, replace the K1 14 V power module.

Repair Instructions

Perform the Diagnostic Repair Verification after completing the diagnostic procedure.

Control Module References for Accessory DC Power Control Module, also called the 14 V power module, replacement, programming and set-up.

&#169© Copyright Chevrolet. All rights reserved

DTC P1E15-P1E18

Diagnostic Instructions

- Perform the Diagnostic System Check - Vehicle prior to using this diagnostic procedure.
- Review Strategy Based Diagnosis for an overview of the diagnostic approach.
- Diagnostic Procedure Instructions provides an overview of each diagnostic category.

DTC Descriptor

DTC P1E15: Drive Motor 1 Control Module 5 Volt Reference 1 Circuit

DTC P1E16: Drive Motor 1 Control Module 5 Volt Reference 2 Circuit

DTC P1E17: Drive Motor 2 Control Module 5 Volt Reference 1 Circuit

DTC P1E18: Auxiliary Transmission Fluid Pump Control Module 5 Volt Reference Circuit

Circuit/System Description

The power inverter module, often referred to as the drive motor generator power inverter module, contains three motor control modules and the hybrid powertrain control module. Two of the motor control modules operate their respective drive motor generator based upon power inverter module commands. The third motor control module controls the auxiliary transmission fluid pump motor. Each motor control module utilises a 5 V reference power supply for internal circuit needs. This fault is handled inside the power inverter module and no external circuits are involved. The motor control modules and the hybrid powertrain control module are part of the power inverter module and are not serviced separately.

Conditions for Running the DTC

- The vehicle is ON.
- The system voltage is at least 7 V.

Conditions for Setting the DTC

The control module has detected an internal malfunction.

Action Taken When the DTC Sets

DTCs P1E15, P1E16, P1E17, and P1E18 are Type C DTCs.

Conditions for Clearing the DTC

DTCs P1E15, P1E16, P1E17, and P1E18 are Type C DTCs.

Reference Information

Electrical Information Reference

- Circuit Testing
- Connector Repairs
- Testing for Intermittent Conditions and Poor Connections
- Wiring Repairs

DTC Type Reference

Powertrain Diagnostic Trouble Code (DTC) Type Definitions

Circuit/System Verification

Program the T6 power inverter module. If the DTC resets, replace the T6 power inverter module.

Repair Instructions

Perform the Diagnostic Repair Verification after completing the diagnostic procedure.

Control Module References for Drive Motor Generator Power Inverter Module, also called the power inverter module, replacement, programming and set-up.

&#169© Copyright Chevrolet. All rights reserved

DTC P1E19 or P1E1A

Diagnostic Instructions

- Perform the Diagnostic System Check - Vehicle prior to using this diagnostic procedure.
- Review Strategy Based Diagnosis for an overview of the diagnostic approach.
- Diagnostic Procedure Instructions provides an overview of each diagnostic category.

DTC Descriptor

DTC P1E19: Auxiliary Transmission Fluid Pump Control Module System Voltage Low

DTC P1E1A: Auxiliary Transmission Fluid Pump Control Module System Voltage High

Circuit/System Description

The power inverter module, often referred to as the drive motor generator power inverter module, contains three motor control modules and the hybrid powertrain control module. Two of the motor control modules operate their respective drive motor generator based upon power inverter module commands. The third motor control module controls the auxiliary transmission fluid pump motor. The hybrid powertrain control module and the motor control modules share the power inverter module ignition voltage circuit, battery voltage circuits and chassis earth.

Conditions for Running the DTC

The vehicle is ON.

Conditions for Setting the DTC

DTC P1E19

System voltage is less than 9.5 V for 1 second.

DTC P1E1A

System voltage is greater than 9.5 V for 1 second.

Action Taken When the DTC Sets

DTCs P1E19 and P1E1A are Type C DTCs.

Conditions for Clearing the DTC

DTCs P1E19 and P1E1A are Type C DTCs.

Reference Information

DTC Type Reference

Powertrain Diagnostic Trouble Code (DTC) Type Definitions

Circuit/System Verification

1. Verify that DTC P0562 or P0563 are not set.
   If DTC P0562 or P0563 is set, refer to DTC B1325, B1330, B1517, C0800, C0899, C0900, C12E1, C12E2, P0562, P0563, P1A0C, P1A0D, or P1EFC .
2. If the DTC is set, program the T6 power inverter module. If the DTC resets, replace the T6 power inverter module.

Repair Instructions

Perform the Diagnostic Repair Verification after completing the diagnostic procedure.

Control Module References for Drive Motor Generator Power Inverter Module, also called the power inverter module, replacement, programming and set-up.

&#169© Copyright Chevrolet. All rights reserved

DTC P1E1B-P1E1F

Diagnostic Instructions

- Perform the Diagnostic System Check - Vehicle prior to using this diagnostic procedure.
- Review Strategy Based Diagnosis for an overview of the diagnostic approach.
- Diagnostic Procedure Instructions provides an overview of each diagnostic category.

DTC Descriptor

DTC P1E1B: Auxiliary Transmission Fluid Pump Control Module Hybrid Battery Voltage Isolation Sensing Performance

DTC P1E1C: Auxiliary Transmission Fluid Pump Control Module Hybrid Battery Voltage Isolation Sensor Circuit 1 Low Voltage

DTC P1E1D: Auxiliary Transmission Fluid Pump Control Module Hybrid Battery Voltage Isolation Sensor Circuit 1 High Voltage

DTC P1E1E: Auxiliary Transmission Fluid Pump Control Module Hybrid Battery Voltage Isolation Sensor Circuit 2 Low Voltage

DTC P1E1F: Auxiliary Transmission Fluid Pump Control Module Hybrid Battery Voltage Isolation Sensor Circuit 2 High Voltage

Circuit/System Description

The power inverter module, also called the drive motor generator power inverter module, contains three motor control modules and the hybrid powertrain control module. Two of the motor control modules operate their respective drive motor generator based upon power inverter module commands. The third motor control module controls the auxiliary transmission fluid pump motor. The motor control modules and the hybrid powertrain control module are part of the power inverter module and are not serviced separately.

Each motor control module measures hybrid battery high voltage with several internal sensors. The motor control modules test for loss of isolation between either the high-voltage positive circuit or high-voltage negative circuit and vehicle chassis. The motor control modules test for isolation when the high-voltage contactor relays are closed. The hybrid powertrain control module 2 only tests the hybrid battery assembly for high-voltage loss of isolation when the high-voltage contactor relays are open.

Motor control module loss of isolation is detected through the use of two high-impedance resistors and voltage measuring circuitry. The two resistors are connected in series between the high- voltage positive and high-voltage negative circuits. The centre connection of the two resistors is also connected to vehicle chassis. The motor control

module then measures the voltage drop across one of the resistors. Without a loss of isolation, the motor control module should measure about half of the high voltage potential. This is referred to as mid-pack voltage. The mid-pack voltage value is then doubled by the software and displayed on a scan tool as Motor 1 Isolation Voltage, Motor 2 Isolation Voltage or Auxiliary Transmission Fluid Pump Isolation Voltage. When a loss of isolation is present, the motor isolation voltage display will indicate voltage that is more or less than actual hybrid battery high voltage. The motor control module monitors the loss of isolation voltage measuring circuitry for correct operation.

Conditions for Running the DTC

1. The vehicle is ON.
2. The system voltage is at least 9 V.

Conditions for Setting the DTC

P1E1B

The motor control module detects a correlation difference between the mid-pack isolation sensor and overall pack voltage.

P1E1C and P1E1E

The motor control module detects isolation sensor voltage less than 20 V.

P1E1D and P1E1F

The motor control module detects isolation sensor voltage greater than 40 V.

Action Taken When the DTC Sets

DTCs P1E1B, P1E15C, P1E1D, P1E1E, and P1E1F are Type C DTCs.

Conditions for Clearing the DTC

DTCs P1E1B, P1E15C, P1E1D, P1E1E, and P1E1F are Type C DTCs.

Reference Information

Electrical Information Reference

- Circuit Testing
- Connector Repairs
- Testing for Intermittent Conditions and Poor Connections

- Wiring Repairs

DTC Type Reference

Powertrain Diagnostic Trouble Code (DTC) Type Definitions

Circuit/System Verification

Program the T6 power inverter module. If the DTC resets, replace the T6 power inverter module.

Repair Instructions

Perform the Diagnostic Repair Verification after completing the diagnostic procedure.

Control Module References for Drive Motor Generator Power Inverter Module, also called the power inverter module, replacement, programming and set-up.

&#169© Copyright Chevrolet. All rights reserved

DTC P1E20-P1E22

Diagnostic Instructions

- Perform the Diagnostic System Check - Vehicle prior to using this diagnostic procedure.
- Review Strategy Based Diagnosis for an overview of the diagnostic approach.
- Diagnostic Procedure Instructions provides an overview of each diagnostic category.

DTC Descriptor

DTC P1E20: Auxiliary Transmission Fluid Pump Control Module Hybrid/EV Battery Voltage Sense Circuit Low Voltage

DTC P1E21: Auxiliary Transmission Fluid Pump Control Module Hybrid/EV Battery Voltage Sense Circuit High Voltage

DTC P1E22: Auxiliary Transmission Fluid Pump Control Module Hybrid Battery Voltage System Isolation Lost

Circuit/System Description

The power inverter module, often referred to as the drive motor generator power inverter module, contains three motor control modules and the hybrid powertrain control module. Two of the motor control modules operate their respective drive motor generator based upon power inverter module commands. The third motor control module controls the auxiliary transmission fluid pump motor. Each drive motor control module monitors its internal high voltage sensor for correct operation, no external circuits are involved. The motor control modules and the hybrid powertrain control module are part of the power inverter module and are not serviced separately.

Conditions for Running the DTC

- The vehicle is ON.
- The system voltage is 8-18 V.
- The high voltage contactor relays are closed.

Conditions for Setting the DTC

DTC P1E20

The drive motor control module detects high-voltage sensor voltage less than 30 V.

DTC P1E21

The drive motor control module detects high-voltage sensor voltage greater than 500 V.

P1E22

The drive motor control module detects an isolation fault between the battery pack and chassis earth.

Action Taken When the DTC Sets

- DTCs P1E20 and P1E21 are Type A DTCs.
- DTC P1E22 is a Type B DTC.

Conditions for Clearing the DTC

- DTCs P1E20 and P1E21 are Type A DTCs.
- DTC P1E22 is a Type B DTC.

Reference Information

DTC Type Reference

Powertrain Diagnostic Trouble Code (DTC) Type Definitions

Circuit/System Verification

If the DTC is set, program the T6 power inverter module. If the DTC resets, replace the T6 power inverter module.

Repair Instructions

Perform the Diagnostic Repair Verification after completing the diagnostic procedure.

Control Module References for Drive Motor Generator Power Inverter Module, also called the power inverter module, replacement, programming and set-up.

&#169© Copyright Chevrolet. All rights reserved

DTC P1E27 or P1E28

Diagnostic Instructions

- Perform the Diagnostic System Check - Vehicle prior to using this diagnostic procedure.
- Review Strategy Based Diagnosis for an overview of the diagnostic approach.
- Diagnostic Procedure Instructions provides an overview of each diagnostic category.

DTC Descriptor

DTC P1E27: Auxiliary Transmission Fluid Pump Control Module Hybrid/EV Battery System Voltage High Voltage

DTC P1E28: Auxiliary Transmission Fluid Pump Control Module Hybrid/EV Battery System Voltage

Circuit/System Description

The power inverter module, often referred to as the drive motor generator power inverter module, contains three motor control modules and the hybrid powertrain control module. Two of the motor control modules operate their respective drive motor generator based upon power inverter module commands. The third motor control module controls the auxiliary transmission fluid pump motor. Each drive motor control module monitors its internal high voltage sensor for correct operation, no external circuits are involved. The motor control modules and the hybrid powertrain control module are part of the power inverter module and are not serviced separately.

Conditions for Running the DTC

- The vehicle is ON.
- High-voltage contactors are closed.

P1E28

DTC P1E20 or P1E21 is not set.

Conditions for Setting the DTC

DTC P1E27

The motor control module detects High Voltage greater than 425 V.

DTC P1E28

The motor control module detects a correlation fault while comparing the mid-pack and overall pack voltage.

Action Taken When the DTC Sets

- DTC P1E27 is a Type A DTC.
- DTC P1E28 is a Type B DTC.

Conditions for Clearing the DTC

- DTC P1E27 is a Type A DTC.
- DTC P1E28 is a Type B DTC.

Diagnostic Aids

This DTC may set due to low 12 V system voltage.

Reference Information

DTC Type Reference

Powertrain Diagnostic Trouble Code (DTC) Type Definitions

Circuit/System Verification

1. Verify that DTC P0562 is not set.
   If DTC is set, refer to DTC B1325, B1330, B1517, C0800, C0899, C0900, C12E1, C12E2, P0562, P0563, P1A0C, P1A0D, or P1EFC .
2. If the DTC is set, program the T6 power inverter module. If the DTC resets, replace the T6 power inverter module.

Repair Instructions

Perform the Diagnostic Repair Verification after completing the diagnostic procedure.

Control Module References for Drive Motor Generator Power Inverter Module, also called the power inverter module, replacement, programming and set-up.

&#169© Copyright Chevrolet. All rights reserved

DTC P1E29

Diagnostic Instructions

- Perform the Diagnostic System Check - Vehicle prior to using this diagnostic procedure.
- Review Strategy Based Diagnosis for an overview of the diagnostic approach.
- Diagnostic Procedure Instructions provides an overview of each diagnostic category.

DTC Descriptor

DTC P1E29: Auxiliary Transmission Fluid Pump Control Module Calculated Motor Position Performance

Circuit/System Description

The power inverter module, often referred to as the drive motor generator power inverter module, contains three motor control modules and the hybrid powertrain control module. Two of the motor control modules operate their respective drive motor generator based upon power inverter module commands. The third motor control module controls the auxiliary transmission fluid pump motor. The hybrid powertrain control module and the motor control modules share the power inverter module ignition voltage circuit, battery voltage circuits and chassis earth. The motor control modules and the hybrid powertrain control module are part of the power inverter module and are not serviced separately.

The auxiliary transmission fluid pump motor control module uses sensorless control to estimate motor speed and position from the phase current sensors.

Conditions for Running the DTC

The vehicle is ON or the power inverter module is awake.

Conditions for Setting the DTC

The auxiliary transmission fluid pump motor control module detects a fault.

Action Taken When the DTC Sets

DTC P1E29 is a Type A DTC.

Conditions for Clearing the DTC

DTC P1E29 is a Type A DTC.

Reference Information

DTC Type Reference

Powertrain Diagnostic Trouble Code (DTC) Type Definitions

Circuit/System Verification

1. Verify that DTC P179A, P1E20, P1E21, P1E22, P1E27, P1E28, P1E1C, P1E1D, P1E1E, P1E1F, P1E1B, P1E29, P1E34, P1E35, or P1E36 is not set.
   If DTC P179A, P1E20, P1E21, P1E22, P1E27, P1E28, P1E1C, P1E1D, P1E1E, P1E1F, P1E1B, P1E29, P1E34, P1E35, or P1E36 is set, refer to Diagnostic Trouble Code (DTC) List - Vehicle .
2. If the DTC is set, program the T6 power inverter module. If the DTC resets, replace the T6 power inverter module.

Repair Instructions

Perform the Diagnostic Repair Verification after completing the diagnostic procedure.

Control Module References for Drive Motor Generator Power Inverter Module, also called the power inverter module, replacement, programming and set-up.

&#169© Copyright Chevrolet. All rights reserved

DTC P1E2A-P1E2F or P1E30-P1E32

Diagnostic Instructions

- Perform the Diagnostic System Check - Vehicle prior to using this diagnostic procedure.
- Review Strategy Based Diagnosis for an overview of the diagnostic approach.
- Diagnostic Procedure Instructions provides an overview of each diagnostic category.

DTC Descriptor

DTC P1E2A: Auxiliary Transmission Fluid Pump Phase U Current Sensor Circuit Low Voltage

DTC P1E2B: Auxiliary Transmission Fluid Pump Phase U Current Sensor Circuit High Voltage

DTC P1E2C: Auxiliary Transmission Fluid Pump Phase U Current Sensor Performance

DTC P1E2D: Auxiliary Transmission Fluid Pump Phase V Current Sensor Circuit Low Voltage

DTC P1E2E: Auxiliary Transmission Fluid Pump Phase V Current Sensor Circuit High Voltage

DTC P1E2F: Auxiliary Transmission Fluid Pump Phase V Current Sensor Performance

DTC P1E30: Auxiliary Transmission Fluid Pump Phase W Current Sensor Circuit Low Voltage

DTC P1E31: Auxiliary Transmission Fluid Pump Phase W Current Sensor Circuit High Voltage

DTC P1E32: Transmission Fluid Pump Phase W Current Sensor Performance

Circuit/System Description

The power inverter module, often referred to as the drive motor generator power inverter module, contains three motor control modules and the hybrid powertrain control module. Two of the motor control modules operate their respective drive motor generator based upon power inverter module commands. The third motor control module controls the auxiliary transmission fluid pump motor. This is an internal fault detection of the power inverter module. This fault is handled inside the power inverter module and

no external circuits are involved.

Each motor control module operates its respective drive motor based upon hybrid powertrain control module commands. Each motor control module controls its respective motor through the sequencing actuation of high-current switching transistors called insulated gate bipolar transistors. Each motor operates utilising 3-phase alternating current AC electricity. Each insulated gate bipolar transistor operates a single phase of the drive motor generator. Each phase is individually identified as U, V and W. Each motor control module monitors the current of each phase in order to detect out of range current conditions.

Because each individual motor's phase circuits are electrically joined together, the phases normally flow about the same amount of current. The motor control module performs a mathematical calculation to verify that the phase current sensors are accurate. If the U-V-W phase current sensors indicate about the same amount of phase current, the sum of the calculation should be near zero. If the U-V-W phase currents are not similar, this DTC will set.

Conditions for Running the DTC

The vehicle is ON or the module is awake.

Conditions for Setting the DTC

The control module has detected an internal malfunction.

Action Taken When the DTC Sets

- DTCs P1E2A P1E2B, P1E2C, P1E2D, P1E2E, P1E2F, P1E30, P1E31, and P1E32 are Type A DTCs.
- The power inverter module requests the hybrid powertrain control module 2 to open the high voltage contactor relays.

Conditions for Clearing the DTC

DTCs P1E2A P1E2B, P1E2C, P1E2D, P1E2E, P1E2F, P1E30, P1E31, and P1E32 are Type A DTCs.

Reference Information

DTC Type Reference

Powertrain Diagnostic Trouble Code (DTC) Type Definitions

Circuit/System Verification

If the DTC is set, program the T6 power inverter module. If the DTC resets, replace the T6 power inverter module.

Repair Instructions

Perform the Diagnostic Repair Verification after completing the diagnostic procedure.

Control Module References for Drive Motor Generator Power Inverter Module, also called the power inverter module, replacement, programming and set-up.

&#169© Copyright Chevrolet. All rights reserved

DTC P1E33

Diagnostic Instructions

- Perform the Diagnostic System Check - Vehicle prior to using this diagnostic procedure.
- Review Strategy Based Diagnosis for an overview of the diagnostic approach.
- Diagnostic Procedure Instructions provides an overview of each diagnostic category.

DTC Descriptor

DTC P1E33: Auxiliary Transmission Fluid Pump Phase U-V-W Current Sensors Not Plausible

Circuit/System Description

The power inverter module, often referred to as the drive motor generator power inverter module, contains three motor control modules and the hybrid powertrain control module. Two of the motor control modules operate their respective drive motor generator based upon power inverter module commands. The third motor control module controls the auxiliary transmission fluid pump motor.

Each motor control module operates its respective drive motor based upon hybrid powertrain control module commands. Each motor control module controls its respective motor through the sequencing actuation of high-current switching transistors called insulated gate bipolar transistors. Each motor operates utilising 3-phase alternating current AC electricity. Each insulated gate bipolar transistor operates a single phase of the drive motor generator. Each phase is individually identified as U, V and W. Each motor control module monitors the current of each phase in order to detect out-of-range current conditions.

Because each individual motor's phase circuits are electrically joined together, the phases normally flow about the same amount of current. The motor control module performs a mathematical calculation to verify that the phase current sensors are accurate. If the U-V-W phase current sensors indicate about the same amount of phase current, the sum of the calculation should be near zero. If the U-V-W phase currents are not similar, this DTC will set.

Conditions for Running the DTC

- The vehicle is ON or the module is awake.
- The high voltage contactor relays are closed.

Conditions for Setting the DTC

The sum of the 3-phase current sensors is greater than 5 A.

Action Taken When the DTC Sets

DTC P1E33 is a Type A DTC.

Conditions for Clearing the DTC

DTC P1E33 is a Type A DTC.

Reference Information

Schematic Reference

Hybrid Controls Schematics

Connector End View Reference

- Component Connector End Views
- Inline Harness Connector End Views

Electrical Information Reference

- Circuit Testing
- Connector Repairs
- Testing for Intermittent Conditions and Poor Connections
- Wiring Repairs

DTC Type Reference

Powertrain Diagnostic Trouble Code (DTC) Type Definitions

Circuit/System Testing

> **Danger:** Always perform the High-Voltage Disabling procedure prior to servicing any High Voltage component or connection. Personal Protection Equipment (PPE) and proper procedures must be followed.
>
> The High-Voltage Disabling procedure will perform the following tasks:

- Identify how to disable high voltage.
- Identify how to test for the presence of high voltage.
- Identify conditions under which high voltage is always present and personal protection equipment (PPE) and proper procedures must be followed.

Failure to follow the procedures exactly as written may result in serious injury or death.

1. Perform the High Voltage Disabling procedure for servicing the T6 power inverter module assembly or T12 transmission.
2. Remove the X8 connector from the T6 power inverter module.
3. Test for infinite resistance between the AC circuit terminals listed below and ground:
   - Terminal 1-phase W
   - Terminal 2 phase V
   - Terminal 3-phase U

   If not the specified value, replace the G5 auxiliary transmission fluid pump motor.
   If the circuit tests normal, replace the T6 drive motor power inverter module. If the DTC resets, replace the G5 auxiliary transmission fluid pump motor.

Repair Instructions

Perform the Diagnostic Repair Verification after completing the diagnostic procedure.

- Auxiliary Fluid Pump Motor and Fluid Pump Disassemble in Off-Vehicle Repair Instructions for Auxiliary Transmission Fluid Pump Motor removal
- Control Module References for Drive Motor Generator Power Inverter Module, also called the power inverter module, replacement, programming and set-up.

&#169© Copyright Chevrolet. All rights reserved

DTC P1E34-P1E36

Diagnostic Instructions

- Perform the Diagnostic System Check - Vehicle prior to using this diagnostic procedure.
- Review Strategy Based Diagnosis for an overview of the diagnostic approach.
- Diagnostic Procedure Instructions provides an overview of each diagnostic category.

DTC Descriptor

DTC P1E34: Auxiliary Transmission Fluid Pump Inverter Temperature Sensor Circuit High Voltage

DTC P1E35: Auxiliary Transmission Fluid Pump Inverter Temperature Sensor Circuit Low Voltage

DTC P1E36: Auxiliary Transmission Fluid Pump Inverter Temperature Sensor Performance

Circuit/System Description

This is an internal fault detection of the power inverter module, often referred to as the drive motor generator power inverter module. This fault is handled inside the power inverter module and no external circuits are involved.

Conditions for Running the DTC

- The vehicle is ON or the module is awake.
- Motor temperature is above -40°C (-40°F). If motor temperature is less than -40°C (-40°F) at vehicle ON, the drive motor must operate at greater than 20 N·m (14.75 lb ft) for a cumulative time of 1.5 minutes before the DTC will run.

Conditions for Setting the DTC

DTC P1E34

The inverter phase temperature sensor is less than -58°C (-72°F) for 3 seconds. If the fault is detected at the start of a drive cycle the DTC will set after 600 seconds.

DTC P1E35

The inverter phase temperature sensor is greater than 130°C (266°F) for 3 seconds.

DTC P1E36

A 20°C (36°F) difference is observed between the individual inverter phase temperature sensor and the average of the Hybrid Electronics Coolant Temperature and the Transmission Fluid Temperature.

Action Taken When the DTC Sets

DTCs P1E34, P1E35 and P1E36 are Type B DTCs.

Conditions for Clearing the DTC

DTCs P1E34, P1E35 and P1E36 are Type B DTCs.

Reference Information

DTC Type Reference

Powertrain Diagnostic Trouble Code (DTC) Type Definitions

Circuit/System Verification

If the DTC is set, program the T6 power inverter module. If the DTC resets, replace the T6 power inverter module.

Repair Instructions

Perform the Diagnostic Repair Verification after completing the diagnostic procedure.

Control Module References for Drive Motor Generator Power Inverter Module, also called the power inverter module, replacement, programming and set-up.

&#169© Copyright Chevrolet. All rights reserved

DTC P1E37

Diagnostic Instructions

- Perform the Diagnostic System Check - Vehicle prior to using this diagnostic procedure.
- Review Strategy Based Diagnosis for an overview of the diagnostic approach.
- Diagnostic Procedure Instructions provides an overview of each diagnostic category.

DTC Descriptor

DTC P1E37: Auxiliary Transmission Fluid Pump Inverter High Temperature

Circuit/System Description

The power inverter module, often referred to as the drive motor generator power inverter module, contains three motor control modules and the hybrid powertrain control module. Two of the motor control modules operate their respective drive motor generator based upon power inverter module commands. The third motor control module controls the auxiliary transmission fluid pump motor. The inverter temperature sensor is part of the power inverter module and is not serviced separately.

Conditions for Running the DTC

- The vehicle is ON and propulsion is active.
- DTC P1E36 is not set.

Conditions for Setting the DTC

The pump inverter temperature sensor is greater than 98°C (208°F).

Action Taken When the DTC Sets

- DTC P1E37 is a Type B DTC.
- The hybrid powertrain control module commands the engine into derate mode.

Conditions for Clearing the DTC

DTC P1E37 is a Type B DTC.

Diagnostic Aids

- Ask about the customer's driving habits, trailer towing, etc.
- Ensure the engine cooling system is functioning normally.

Reference Information

DTC Type Reference

Powertrain Diagnostic Trouble Code (DTC) Type Definitions

Scan Tool Reference

Control Module References for scan tool information

Circuit/System Verification

1. Verify that DTC P1E36 is not set.
   If DTC P1E36 is set, refer to DTC P1E34-P1E36 .
2. Verify that DTC P0C11, P0C12, P0C13, P0C14, P0C15, or P0C16 is not set.
   If DTC P0C11, P0C12, P0C13, P0C14, P0C15, or P0C16 is set, refer to DTC P0C11-P0C16 .
3. If the DTC is set, program the T6 power inverter module. If the DTC resets, replace the T6 power inverter module.

Repair Instructions

Perform the Diagnostic Repair Verification after completing the diagnostic procedure.

Control Module References for Drive Motor Generator Power Inverter Module, also called the power inverter module, replacement, programming and set-up.

&#169© Copyright Chevrolet. All rights reserved

DTC P1E38

Diagnostic Instructions

- Perform the Diagnostic System Check - Vehicle prior to using this diagnostic procedure.
- Review Strategy Based Diagnosis for an overview of the diagnostic approach.
- Diagnostic Procedure Instructions provides an overview of each diagnostic category.

DTC Descriptor

DTC P1E38: Auxiliary Transmission Fluid Pump Inverter Supply Voltage Circuit

Circuit/System Description

The power inverter motor, often referred to as the drive motor generator power inverter module, contains three motor control modules and the hybrid powertrain control module. Two of the motor control modules operate their respective drive motor generator based upon power inverter module commands. The third motor control module controls the auxiliary transmission fluid pump motor. The hybrid powertrain control module and the motor control modules share the power inverter module ignition voltage circuit, battery voltage circuits and chassis earth.

Conditions for Running the DTC

Vehicle is ON or Charge Mode is active.

Conditions for Setting the DTC

The control module does not detect voltage at the insulated gate bipolar transistor bias power supply.

Action Taken When the DTC Sets

DTC P1E38 is a Type A DTC.

Conditions for Clearing the DTC

DTC P1E38 is a Type A DTC.

Reference Information

DTC Type Reference

Powertrain Diagnostic Trouble Code (DTC) Type Definitions

Circuit/System Verification

If the DTC is set, program the T6 power inverter module. If the DTC resets, replace the T6 power inverter module.

Repair Instructions

Perform the Diagnostic Repair Verification after completing the diagnostic procedure.

Control Module References for Drive Motor Generator Power Inverter Module, also called the power inverter module, replacement, programming and set-up.

&#169© Copyright Chevrolet. All rights reserved

DTC P1E39

Diagnostic Instructions

- Perform the Diagnostic System Check - Vehicle prior to using this diagnostic procedure.
- Review Strategy Based Diagnosis for an overview of the diagnostic approach.
- Diagnostic Procedure Instructions provides an overview of each diagnostic category.

DTC Descriptor

DTC P1E39: Auxiliary Transmission Fluid Pump Inverter Performance

Circuit/System Description

The power inverter module, often referred to as the drive motor generator power inverter module, contains three motor control modules and the hybrid powertrain control module. Two of the motor control modules operate their respective drive motor generator based upon power inverter module commands. The third motor control module controls the auxiliary transmission fluid pump motor. Each motor control module controls its respective motor through the sequencing actuation of high-current switching transistors called insulated gate bipolar transistors. Each insulated gate bipolar transistor assembly is monitored for fault conditions. The motor control modules are part of the power inverter module and are not serviced separately.

Conditions for Running the DTC

The Vehicle is ON or Charge Mode is active.

Conditions for Setting the DTC

The motor control module detects excessive current flow through the switched portion of the insulated gate bipolar transistor.

Action Taken When the DTC Sets

- DTC P1E39 is a Type A DTC.
- Propulsion will be disabled and the power inverter module requests the hybrid powertrain control module 2 to open the high-voltage contactor relays.

Conditions for Clearing the DTC

DTC P1E39 is a Type A DTC.

Reference Information

Schematic Reference

Hybrid Controls Schematics

Connector End View Reference

- Component Connector End Views
- Inline Harness Connector End Views

Electrical Information Reference

- Circuit Testing
- Connector Repairs
- Testing for Intermittent Conditions and Poor Connections
- Wiring Repairs

DTC Type Reference

Powertrain Diagnostic Trouble Code (DTC) Type Definitions

Circuit/System Verification

Danger: Always perform the High-Voltage Disabling procedure prior to servicing any High Voltage component or connection. Personal Protection Equipment (PPE) and proper procedures must be followed.

The High-Voltage Disabling procedure will perform the following tasks:

- Identify how to disable high voltage.
- Identify how to test for the presence of high voltage.
- Identify conditions under which high voltage is always present and personal protection equipment (PPE) and proper procedures must be followed.

Failure to follow the procedures exactly as written may result in serious injury or death.

1. Perform the High Voltage Disabling procedure for servicing the T6 power inverter module assembly or the T12 transmission.
2. Remove the X8 connector from the T6 power inverter module.
3. Test for infinite resistance between each of the AC circuit terminals listed below and earth:
   - Terminal 1-phase W
   - Terminal 2 phase V
   - Terminal 3-phase U

   If not the specified value, replace the G5 auxiliary transmission fluid pump motor.
   If the circuit tests normal, replace the T6 power inverter module. If the DTC resets, replace the G5 auxiliary transmission fluid pump motor.

Repair Instructions

Perform the Diagnostic Repair Verification after completing the diagnostic procedure.

- Auxiliary Fluid Pump Motor and Fluid Pump Disassemble in Off-Vehicle Repair Instructions for Auxiliary Transmission Fluid Pump Motor removal.
- Control Module References for Drive Motor Generator Power Inverter Module, also called the power inverter module, replacement, programming and set-up.

&#169© Copyright Chevrolet. All rights reserved

DTC P1E3A

Diagnostic Instructions

- Perform the Diagnostic System Check - Vehicle prior to using this diagnostic procedure.
- Review Strategy Based Diagnosis for an overview of the diagnostic approach.
- Diagnostic Procedure Instructions provides an overview of each diagnostic category.

DTC Descriptor

DTC P1E3A: Auxiliary Transmission Fluid Pump Motor Torque Delivered Performance

Circuit/System Description

The power inverter module, often referred to as the drive motor generator power inverter module, contains three motor control modules and the hybrid powertrain control module. Two of the motor control modules operate their respective drive motor generator based upon power inverter module commands. The third motor control module controls the auxiliary transmission fluid pump motor. The hybrid powertrain control module and the motor control modules share the power inverter module ignition voltage circuit, battery voltage circuits and chassis earth.

Conditions for Running the DTC

- The vehicle is ON.
- The system voltage is between 11.0-16.0 V.
- Auxiliary transmission fluid pump torque command is greater than 6.8 N·m (5 lb ft).

Conditions for Setting the DTC

The actual auxiliary transmission fluid pump speed is more than 200 RPM different from the commanded speed.

Action Taken When the DTC Sets

DTC P1E3A is a Type A DTC.

Conditions for Clearing the DTC

DTC P1E3A is a Type A DTC.

Diagnostic Aids

There should always be other hybrid powertrain or motor control module DTC's set along with DTC P1E3A. Always diagnose other DTC's before addressing this DTC.

Reference Information

DTC Type Reference

Powertrain Diagnostic Trouble Code (DTC) Type Definitions

Circuit/System Verification

1. Verify that no other hybrid powertrain or motor control module DTC is set.
   If any hybrid powertrain or motor control module DTC is set, refer to Diagnostic Trouble Code (DTC) List - Vehicle .
   If the DTC is set, refer to Auxiliary Fluid Pump Motor and Fluid Pump Disassemble , Table 1: Electric Auxiliary Pump Drive Motor Removal.
2. If the DTC is set, program the T6 power inverter module. If the DTC resets, replace the T6 power inverter module.

Repair Instructions

Perform the Diagnostic Repair Verification after completing the diagnostic procedure.

- Auxiliary Fluid Pump Motor and Fluid Pump Disassemble for Electric Auxiliary Pump Drive Motor Removal
- Control Module References for Drive Motor Generator Power Inverter Module, also called the power inverter module, replacement, programming and set-up.

&#169© Copyright Chevrolet. All rights reserved

DTC P1E3E or P1E3F

Diagnostic Instructions

- Perform the Diagnostic System Check - Vehicle prior to using this diagnostic procedure.
- Review Strategy Based Diagnosis for an overview of the diagnostic approach.
- Diagnostic Procedure Instructions provides an overview of each diagnostic category.

DTC Descriptor

DTC P1E3E: 14 V Power Module Random Access Memory

DTC P1E3F: 14 V Power Module Read Only Memory

Circuit/System Description

This is an internal fault detection of the 14 V power module, also called the accessory DC power control module. This fault is handled inside the 14 V power module and no external circuits are involved.

Conditions for Running the DTC

- The vehicle is ON.
- The system voltage is at least 9.5 V.

Conditions for Setting the DTC

The control module has detected an internal malfunction.

Action Taken When the DTC Sets

DTCs P1E3E and P1E3F are Type C DTCs.

Conditions for Clearing the DTC

DTCs P1E3E and P1E3F are Type C DTCs.

Reference Information

Electrical Information Reference

- Circuit Testing
- Connector Repairs
- Testing for Intermittent Conditions and Poor Connections
- Wiring Repairs

DTC Type Reference

Powertrain Diagnostic Trouble Code (DTC) Type Definitions

Circuit/System Verification

Program the K1 14 V power module. If the DTC resets, replace the K1 14 V power module.

Repair Instructions

Perform the Diagnostic Repair Verification after completing the diagnostic procedure.

Control Module References for Accessory DC Power Control Module, also called the 14 V Power Module, replacement, programming and set-up.

&#169© Copyright Chevrolet. All rights reserved

DTC P1E40-P1E42

Diagnostic Instructions

- Perform the Diagnostic System Check - Vehicle prior to using this diagnostic procedure.
- Review Strategy Based Diagnosis for an overview of the diagnostic approach.
- Diagnostic Procedure Instructions provides an overview of each diagnostic category.

DTC Descriptor

DTC P1E40: 14 Volt Power Module Hybrid/EV Battery System Voltage Performance

DTC P1E41: 14 Volt Power Module Hybrid/EV Battery System Overvoltage Sensing Circuit

DTC P1E42: 14 Volt Power Module Hybrid/EV Battery System High Voltage

Circuit/System Description

The 14 V power module, also called the accessory DC power control module, constantly monitors system input and output voltage. This sensor is internal to the 14 V power module and is not serviced separately from the control module.

Conditions for Running the DTC

The vehicle is ON.

Conditions for Setting the DTC

Voltage greater than 450 V has been detected.

Action Taken When the DTC Sets

- DTCs P1E40, P1E41 and P1E42 are Type C DTCs.

- The power inverter module requests the hybrid powertrain control module 2 to open the high voltage contactor relays.

Conditions for Clearing the DTC

DTCs P1E40, P1E41 and P1E42 are Type C DTCs.

Diagnostic Aids

DTCs P1E41 and P1E42 may indicate that the high-voltage contactor relays may have opened while large current flow was present. Conditions such as loss of hybrid powertrain control module 2 power or earth or removal of the high-voltage manual disconnect while the vehicle was driving could create a voltage surge that may set this DTC.

Reference Information

DTC Type Reference

Powertrain Diagnostic Trouble Code (DTC) Type Definitions

Circuit/System Verification

If the DTC is set, program the K1 14V power module. If the DTC resets, replace the K1 14 V power module.

Repair Instructions

Perform the Diagnostic Repair Verification after completing the diagnostic procedure.

Control Module References for Accessory DC Power Control Module, also called the 14 V power module, replacement, programming and set-up.

&#169© Copyright Chevrolet. All rights reserved

DTC P1E43 or P1E44

Diagnostic Instructions

- Perform the Diagnostic System Check - Vehicle prior to using this diagnostic procedure.
- Review Strategy Based Diagnosis for an overview of the diagnostic approach.
- Diagnostic Procedure Instructions provides an overview of each diagnostic category.

DTC Descriptor

DTC P1E43: 14 Volt Power Module System Overvoltage Sensing Circuit

DTC P1E44: 14 Volt Power Module System High Voltage

Circuit/System Description

The accessory DC power control module, also referred to as the 14 V power module, constantly monitors system input and output voltage. This sensor is internal to the 14 V power module and is not serviced separately from the control module.

Conditions for Running the DTC

The hybrid powertrain control module commands the 14 V power module to begin charging.

Conditions for Setting the DTC

Voltage greater than 18 V has been detected on the 14 V circuit.

Action Taken When the DTC Sets

DTCs P1E43 and P1E44 are Type C DTCs.

Conditions for Clearing the DTC

DTCs P1E43 and P1E44 are Type C DTCs.

Diagnostic Aids

A battery charger or vehicle jump start may have set this DTC.

Reference Information

DTC Type Reference

Powertrain Diagnostic Trouble Code (DTC) Type Definitions

Circuit/System Verification

If the DTC is set, program the K1 14V power module. If the DTC resets, replace the K1 14 V power module.

Repair Instructions

Perform the Diagnostic Repair Verification after completing the diagnostic procedure.

Control Module References for Accessory DC Power Control Module, also called the 14 V power module, replacement, programming and set-up.

&#169© Copyright Chevrolet. All rights reserved

DTC P1E45

Diagnostic Instructions

- Perform the Diagnostic System Check - Vehicle prior to using this diagnostic procedure.
- Review Strategy Based Diagnosis for an overview of the diagnostic approach.
- Diagnostic Procedure Instructions provides an overview of each diagnostic category.

DTC Descriptor

DTC P1E45: 14 Volt Power Module Temperature Sensors 1-2 Not Plausible

Circuit/System Description

The 14 V power module, also referred to as the accessory DC power control module, constantly monitors system temperature to protect against over-heat conditions. The module also monitors the function of the temperature sensors. These sensors are internal to the 14 V power module and are not serviced separately from the control module.

Conditions for Running the DTC

The vehicle is ON.

Conditions for Setting the DTC

Sensor 1 and sensor 2 values vary by greater than 30°C.

Action Taken When the DTC Sets

DTC P1E45 is a Type C DTC.

Conditions for Clearing the DTC

DTC P1E45 is a Type C DTC.

Reference Information

DTC Type Reference

Powertrain Diagnostic Trouble Code (DTC) Type Definitions

Circuit/System Verification

If the DTC is set, program the K1 14V power module. If the DTC resets, replace the K1 14 V power module.

Repair Instructions

Perform the Diagnostic Repair Verification after completing the diagnostic procedure.

Control Module References for Accessory DC Power Control Module, also called the 14 V power module, replacement, programming and set-up.

&#169© Copyright Chevrolet. All rights reserved

DTC P1E46-P1E49

Diagnostic Instructions

- Perform the Diagnostic System Check - Vehicle prior to using this diagnostic procedure.
- Review Strategy Based Diagnosis for an overview of the diagnostic approach.
- Diagnostic Procedure Instructions provides an overview of each diagnostic category.

DTC Descriptor

DTC P1E46: 14 Volt Power Module Temperature Sensor 1 High Temperature Sensing Circuit

DTC P1E47: 14 Volt Power Module Temperature Sensor 1 Circuit High Temperature

DTC P1E48: 14 Volt Power Module Temperature Sensor 2 High Temperature Sensing Circuit

DTC P1E49: 14 Volt Power Module Temperature Sensor 2 Circuit High Temperature

Circuit/System Description

The 14 V power module, also called the accessory DC power control module, constantly monitors system temperature to protect against overheat conditions. The module also monitors the function of the temperature sensors. These sensors are internal to the 14 V power module and are not serviced separately from the control module.

The 14 V power module is an air cooled component. The 14 V power module vent fan is controlled by the hybrid powertrain control module 2.

Conditions for Running the DTC

The vehicle is ON.

Conditions for Setting the DTC

The sensor signal is out of range for more than 5 seconds.

Action Taken When the DTC Sets

- DTCs P1E46 and P1E47 are Type B DTCs.
- DTCs P1E48 and P1E49 are Type C DTCs.

Conditions for Clearing the DTC

- DTCs P1E46 and P1E47 are Type B DTCs.
- DTCs P1E48 and P1E49 are Type C DTCs.

Reference Information

Electrical Information Reference

- Circuit Testing
- Connector Repairs
- Testing for Intermittent Conditions and Poor Connections
- Wiring Repairs

DTC Type Reference

Powertrain Diagnostic Trouble Code (DTC) Type Definitions

Circuit/System Verification

1. Verify that DTC P1EA6 or P1EA7 is not set.
   If the DTC is set, refer to Diagnostic Trouble Code (DTC) List - Vehicle .
2. Program the K1 14 V power module. If the DTC resets, replace the K1 14 V power module.

Repair Instructions

Perform the Diagnostic Repair Verification after completing the diagnostic procedure.

Control Module References for Accessory DC Power Control Module, also called the 14 V power module, replacement, programming and set-up.

&#169© Copyright Chevrolet. All rights reserved

DTC P1E4A or P1E4B

Diagnostic Instructions

- Perform the Diagnostic System Check - Vehicle prior to using this diagnostic procedure.
- Review Strategy Based Diagnosis for an overview of the diagnostic approach.
- Diagnostic Procedure Instructions provides an overview of each diagnostic category.

DTC Descriptor

DTC P1E4A: Control Module Redundant Drive Motor 1 Speed Sensing Circuit

DTC P1E4B: Control Module Redundant Drive Motor 2 Speed Sensing Circuit

Circuit/System Description

The drive motor generator position sensor is monitored by the motor control module. The motor control module monitors the angular position, speed and direction of the drive motor generator based upon the signals of the resolver-type position sensor. The position sensor allows the motor control module to determine the exact position, speed and direction of the drive motor generator. The hybrid powertrain control module also calculates motor speed. This fault is handled inside the power inverter module, often referred to as the drive motor generator power inverter module, and no external circuits are involved.

Conditions for Running the DTC

This diagnostic runs once at vehicle ON.

Conditions for Setting the DTC

The calculated motor speed is greater than 400 RPM different from the measured speed.

Action Taken When the DTC Sets

- DTC P1E4A is a Type A DTC.

- DTC P1E4B is a Type A DTC.
- Propulsion will be disabled.

Conditions for Clearing the DTC

- DTC P1E4A is a Type A DTC.
- DTC P1E4B is a Type A DTC.

Reference Information

DTC Type Reference

Powertrain Diagnostic Trouble Code (DTC) Type Definitions

Circuit/System Verification

1. Verify that DTC P0562 or P0563 are not set.
   If DTC P0562 or P0563 is set, refer to DTC B1325, B1330, B1517, C0800, C0899, C0900, C12E1, C12E2, P0562, P0563, P1A0C, P1A0D, or P1EFC .
2. If the DTC is set, program the T6 power inverter module. If the DTC resets, replace the T6 power inverter module.

Repair Instructions

Perform the Diagnostic Repair Verification after completing the diagnostic procedure.

Control Module References for Drive Motor Generator Power Inverter Module, also called the power inverter module, replacement, programming and set-up.

&#169© Copyright Chevrolet. All rights reserved

DTC P1EA9

Diagnostic Instructions

- Perform the Diagnostic System Check - Vehicle prior to using this diagnostic procedure.
- Review Strategy Based Diagnosis for an overview of the diagnostic approach.
- Diagnostic Procedure Instructions provides an overview of each diagnostic category.

DTC Descriptors

DTC P1EA9: 14 V Power Module System Low Voltage

Circuit/System Description

The 14 V power module, also called the accessory DC power control module, monitors its 14 volt circuit when it is enabled. This DTC sets when the 14 volt circuit in the 14 V power module is below this minimum level at the time it is enabled. 14V power module module functions will run only when an APM enable message from the hybrid powertrain control module is active on the serial data circuit.

Conditions for Running the DTC

The hybrid powertrain control module commands the 14 V power module to begin charging.

Conditions for Setting the DTC

The 14 volt circuit at the 14 V power module is below 7.0 volts when attempting to begin charging.

Action Taken When the DTC Sets

- DTC P1EA9 is a Type C DTC.
- The 14 V power module will not allow 14 volt conversion to begin in this condition.

Conditions for Clearing the DTC

- DTC P1EA9 is a Type C DTC.
- The 14 volt circuit at the 14 V power module is above 7 volts.

Diagnostic Aids

The 14 V power module is protected by a 200 amp in-line mega-fuse. The output current of the 14 V power module is lower than the fuse rating.

Reference Information

Schematic Reference

Hybrid Controls Schematics

Connector End View Reference

Component Connector End Views

Description and Operation

Accessory DC Power Control Module Description and Operation

Electrical Information Reference

- Circuit Testing
- Testing for Intermittent Conditions and Poor Connections

DTC Type Reference

Powertrain Diagnostic Trouble Code (DTC) Type Definitions

Scan Tool Reference

Control Module References for scan tool information

Circuit/System Testing

1. Remove the B+ harness connector X4 at the K1 14V power module.
2. Connect a test lamp between 12 volt battery positive and the K1 14 V power module connector X4 at the module.
3. Vehicle ON, observe the Low-Voltage Circuit Voltage parameter in the 14 V Power Module data list. The parameter should be within 0.5 volts of the actual 12 volt battery

voltage.

If the voltage is not within the specified range, replace the K1 14V power module.

4. Vehicle OFF, remove the positive connection at the 12 volt battery.
5. Measure the resistance between the X4 connector and the battery positive connection.

   If the resistance is greater than 1.0 ohm, repair the high- resistance condition in the 12 volt circuit.

   If the resistance is less than 1.0 ohm, replace the battery positive cable - B+ APM Module to Battery Fuse Block.

Repair Instructions

Perform the Diagnostic Repair Verification after completing the diagnostic procedure.

- Battery Positive and Negative Cable Replacement for B+ APM Module to Battery Fuse Block.
- Control Module References for Accessory DC Power Control Module, also called the 14 V power module, replacement, programming and set-up

&#169© Copyright Chevrolet. All rights reserved

DTC P1EB8

Diagnostic Instructions

- Perform the Diagnostic System Check - Vehicle prior to using this diagnostic procedure.
- Review Strategy Based Diagnosis for an overview of the diagnostic approach.
- Diagnostic Procedure Instructions provides an overview of each diagnostic category.

DTC Descriptor

DTC P1EB8: Auxiliary Transmission Fluid Pump Control Module Long Term Memory Reset

Circuit/System Description

This is an internal fault detection of the motor control module. The motor control module is internal to the power inverter module, often referred to as the drive motor generator power inverter module, and is not serviced separately. This fault is handled inside the hybrid powertrain and motor control modules and no external circuits are involved.

Conditions for Running the DTC

This diagnostic runs once at vehicle ON.

Conditions for Setting the DTC

The control module has detected an internal malfunction.

Action Taken When the DTC Sets

DTC P1EB8 is a Type A DTC.

Conditions for Clearing the DTC

DTC P1EB8 is a Type A DTC.

Reference Information

DTC Type Reference

Powertrain Diagnostic Trouble Code (DTC) Type Definitions

Circuit/System Verification

1. Verify that DTC P0562 or P0563 are not set.
   If DTC P0562 or P0563 is set, refer to DTC B1325, B1330, B1517, C0800, C0899, C0900, C12E1, C12E2, P0562, P0563, P1A0C, P1A0D, or P1EFC .
2. If the DTC is set, program the T6 power inverter module. If the DTC resets, replace the T6 power inverter module.

Repair Instructions

Perform the Diagnostic Repair Verification after completing the diagnostic procedure.

Control Module References for Drive Motor Generator Power Inverter Module, also called the power inverter module, replacement, programming and set-up.

&#169© Copyright Chevrolet. All rights reserved

DTC P2797

Diagnostic Instructions

- Perform the Diagnostic System Check - Vehicle prior to using this diagnostic procedure.
- Review Strategy Based Diagnosis for an overview of the diagnostic approach.
- Diagnostic Procedure Instructions provides an overview of each diagnostic category.

DTC Descriptor

DTC P2797: Auxiliary Transmission Fluid Pump Performance

Circuit/System Description

The power inverter module, often referred to as the drive motor generator power inverter module contains three motor control modules and the hybrid powertrain control module. Two of the motor control modules operate their respective drive motor generator based upon power inverter module commands. The third motor control module controls the auxiliary transmission fluid pump motor. The hybrid powertrain control module and the motor control modules share the power inverter module ignition voltage circuit, battery voltage circuits and chassis earth.

Conditions for Running the DTC

- The vehicle is ON.
- The system voltage is between 11.0 and 16.0 V.

Conditions for Setting the DTC

The actual auxiliary transmission fluid pump speed is 650 RPM less than the commanded speed.

Action Taken When the DTC Sets

DTC P2797 is a Type A DTC.

Conditions for Clearing the DTC

DTC P2797 is a Type A DTC.

Diagnostic Aids

There should always be other hybrid powertrain or motor control module DTCs set along with DTC P2797. Always diagnose other DTCs before addressing this DTC.

Reference Information

DTC Type Reference

Powertrain Diagnostic Trouble Code (DTC) Type Definitions

Circuit/System Verification

1. Verify that no other hybrid powertrain or motor control module DTC is set.
   If any hybrid powertrain or motor control module DTC is set, refer to Diagnostic Trouble Code (DTC) List - Vehicle .
   If the DTC is set, refer to Auxiliary Fluid Pump Motor and Fluid Pump Disassemble , Table 1: Electric Auxiliary Pump Drive Motor Removal.
2. If the DTC is set, program the T6 power inverter module. If the DTC resets, replace the T6 power inverter module.

Repair Instructions

Perform the Diagnostic Repair Verification after completing the diagnostic procedure.

- Auxiliary Fluid Pump Motor and Fluid Pump Disassemble for Electric Auxiliary Pump Drive Motor Removal
- Control Module References for Drive Motor Generator Power Inverter Module, also called the power inverter module, replacement, programming and set-up.

&#169© Copyright Chevrolet. All rights reserved

Symptoms - Hybrid Controls

Note: The following steps must be completed before using the symptom tables.

1. Perform the Diagnostic System Check - Vehicle before using the symptom tables in order to verify that all of the following are true:
   - There are no DTCs set.
   - The control modules can communicate via the serial data link.
2. Review the system operation in order to familiarize yourself with the system functions.

   Refer to the following procedures:

   - Drive Motor Generator Power Inverter Module Description and Operation
   - High Voltage Monitoring Systems Description
   - Hybrid Modes of Operation Description
   - Drive Motor Battery System Description
   - Transmission General Description

Visual/Physical Inspection

- Inspect for aftermarket devices which could affect the operation of the Hybrid System. Refer to Checking Aftermarket Accessories .
- Inspect the easily accessible or visible system components for obvious damage or conditions which could cause the symptom.

Intermittent

Faulty electrical connections or wiring may be the cause of intermittent conditions. Refer to Testing for Intermittent Conditions and Poor Connections .

Symptom List

Refer to a symptom diagnostic procedure from the following list in order to diagnose the symptom:

DC Power Conversion Test

&#169© Copyright Chevrolet. All rights reserved

DC Power Conversion Test

Diagnostic Instructions

- Perform the Diagnostic System Check - Vehicle prior to using this diagnostic procedure.
- Review Strategy Based Diagnosis for an overview of the diagnostic approach.
- Diagnostic Procedure Instructions provides an overview of each diagnostic category.

Circuit/System Description

The 14 volt power module, also referred to as the accessory DC power control module, supplies the energy that flows between the high voltage (300 V) direct current (DC) and low voltage (14 V) DC to charge the 12 V battery and power accessories. The 14 V power module receives a wake-up signal on a discrete line from the hybrid powertrain controller 2 when the vehicle is On. After a successful initialisation, the 14 V power module receives an enable command from the hybrid powertrain control module over the serial data circuits to begin power conversion.

Diagnostic Aids

- A poor connection at the B+ terminal of the 14 V power module or open 200 Amp Mega-Fuse in the left rear engine compartment, will prevent the 14 V power module from powering up and all values in the 14 V power module data list will read zero on the scan tool.
- A poor connection on the 14 V power module wake-up signal circuit will prevent the 14 V power module from powering up and all data values in the 14 V power module data list will read zero on the scan tool.

Reference Information

Schematic Reference

Hybrid Controls Schematics

Connector End View Reference

Component Connector End Views

Description and Operation

Accessory DC Power Control Module Description and Operation

Electrical Information Reference

- Circuit Testing
- Testing for Intermittent Conditions and Poor Connections

DTC Type Reference

Powertrain Diagnostic Trouble Code (DTC) Type Definitions

Circuit/System Verification

1. Vehicle OFF, measure and record the battery voltage at the battery terminals. The battery voltage should stabilise between 12.4 and 12.8 V within a few minutes of turning the vehicle OFF.
   If not within the specified range, refer to Battery Inspection/Test
2. Vehicle ON, accessories OFF, measure and record the battery voltage at the battery terminals. The voltage should be at least 1 V greater than the voltage measured in step 1 but less than 15 V.
   If not within the specified range, refer to Circuit/System Testing.

Circuit/System Testing

1. Vehicle ON, verify that no K1 14 V power module or B18 battery current sensor DTCs are set that would cause a charging system concern.
   If DTCs are set, refer to Diagnostic Trouble Code (DTC) List - Vehicle .
2. Vehicle OFF, measure the voltage across the battery terminals. The voltage should read 12.4 V or greater at room temperature.
   If not within the specified range, refer to Battery Inspection/Test
3. Connect a carbon pile tester to the C1 battery.
4. Vehicle ON, turn all accessories off. Observe the voltage reading on the tester. The voltage should read between 12.6-15.5V.
5. Adjust the carbon pile tester so that the 12 V current on the 14 V power module data list is reading 160 amps. The voltage reading should remain between 12.6-15.5 V.
   If not within the specified value, replace the K1 14 V power module.

Repair Instructions

Perform the Diagnostic Repair Verification after completing the diagnostic procedure.

Control Module References for Accessory DC Power Control Module, also called the 14 V power module, replacement, programming and set-up.

&#169© Copyright Chevrolet. All rights reserved

Drive Motor Generator Power Inverter Module Cover Replacement

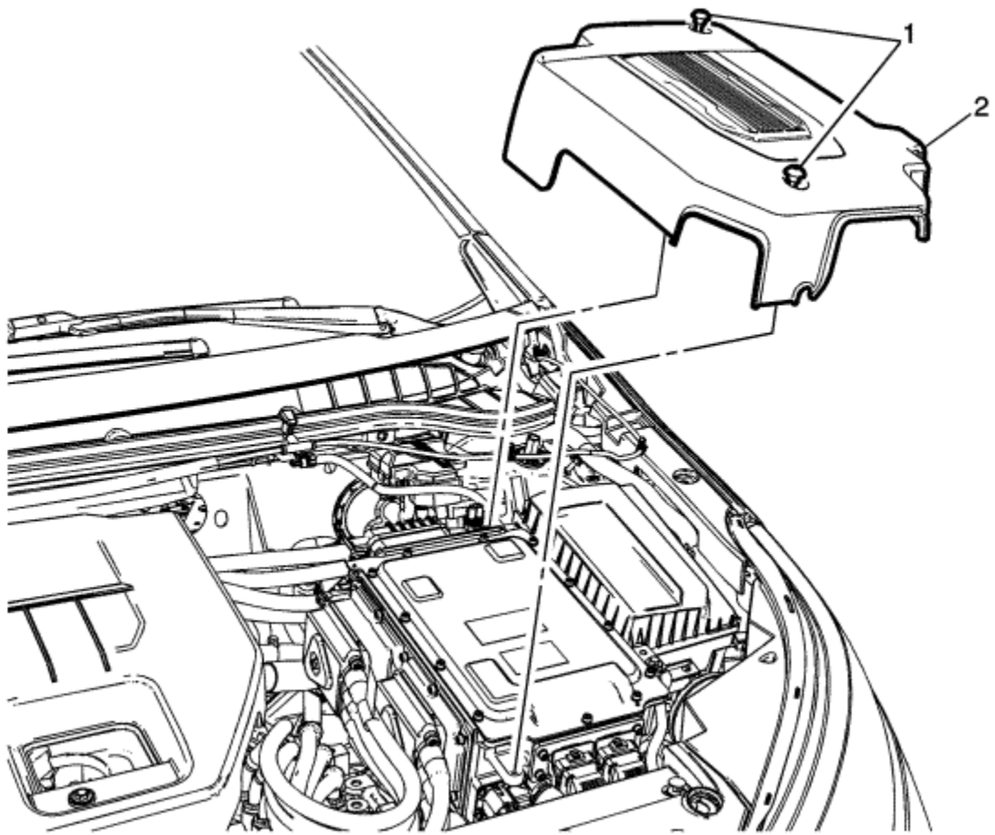

Callout	Component Name
1	Drive Motor Generator Power Inverter Module Cover Fastener (Qty: 2) **Caution:** Refer to Fastener Caution in the Preface section. **Tighten** 9 N·m (80 lb in)

2	Drive Motor Generator Power Inverter Module Cover

© Copyright Chevrolet. All rights reserved

Drive Motor Generator Power Inverter Module Replacement

Removal Procedure

Danger: Always perform the High-Voltage Disabling procedure prior to servicing any High Voltage component or connection. Personal Protection Equipment (PPE) and proper procedures must be followed.

The High-Voltage Disabling procedure will perform the following tasks:

- Identify how to disable high voltage.
- Identify how to test for the presence of high voltage.
- Identify conditions under which high voltage is always present and personal protection equipment (PPE) and proper procedures must be followed.

Failure to follow the procedures exactly as written may result in serious injury or death.

1. Disable the high-voltage system. Refer to High Voltage Disabling .
2. Remove the power inverter module cover. Refer to Drive Motor Generator Power Inverter Module Cover Replacement .

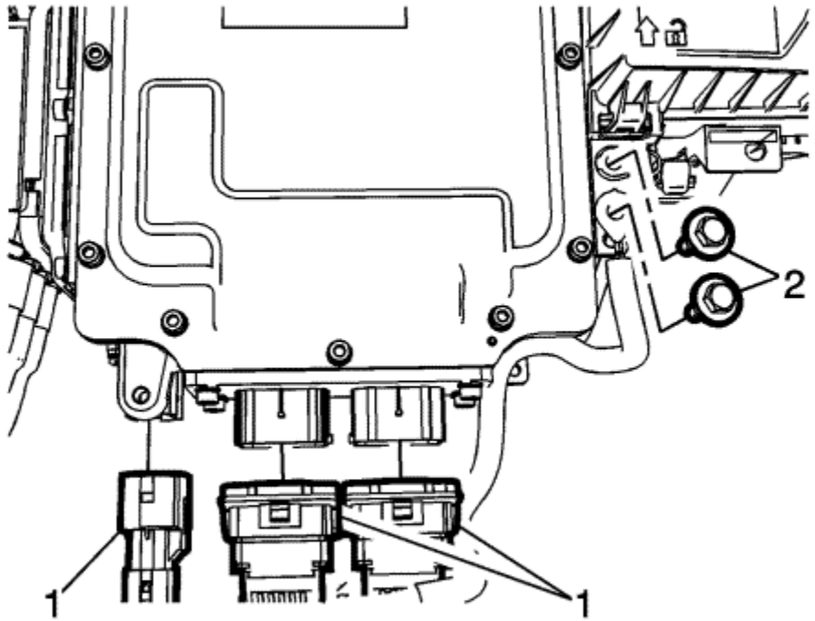

3. Disconnect the electrical connectors (1).
4. Remove the shield circuit harness earth fasteners (2) and reposition the earth cables.
5. Disconnect the coolant pipes from the power inverter module. Refer to Drive Motor Power Inverter Module Cooling Inlet Hose Replacement and . Drive Motor Generator Control Module Radiator Outlet Hose Replacement .

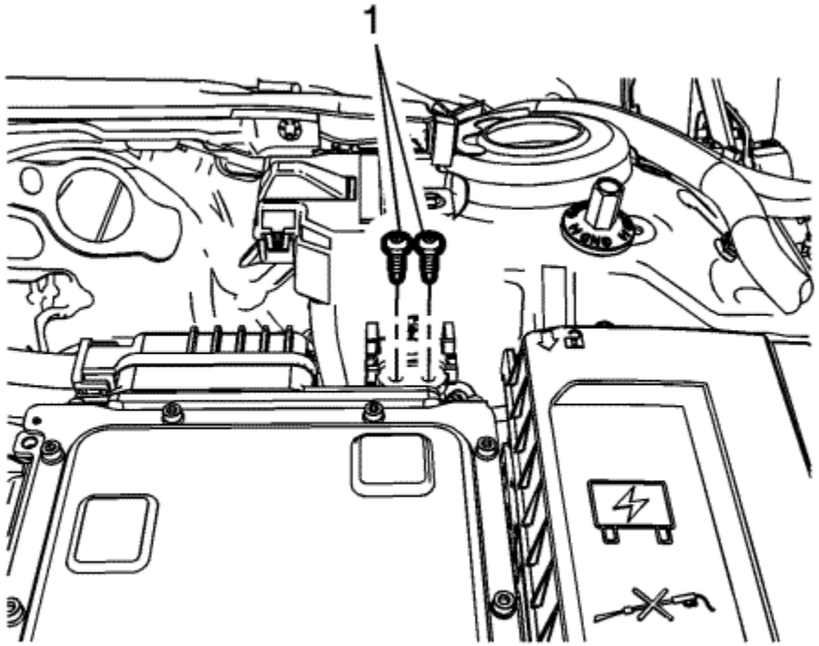

6. Remove the high-voltage interlock loop connector fasteners (1) and reposition the connector.

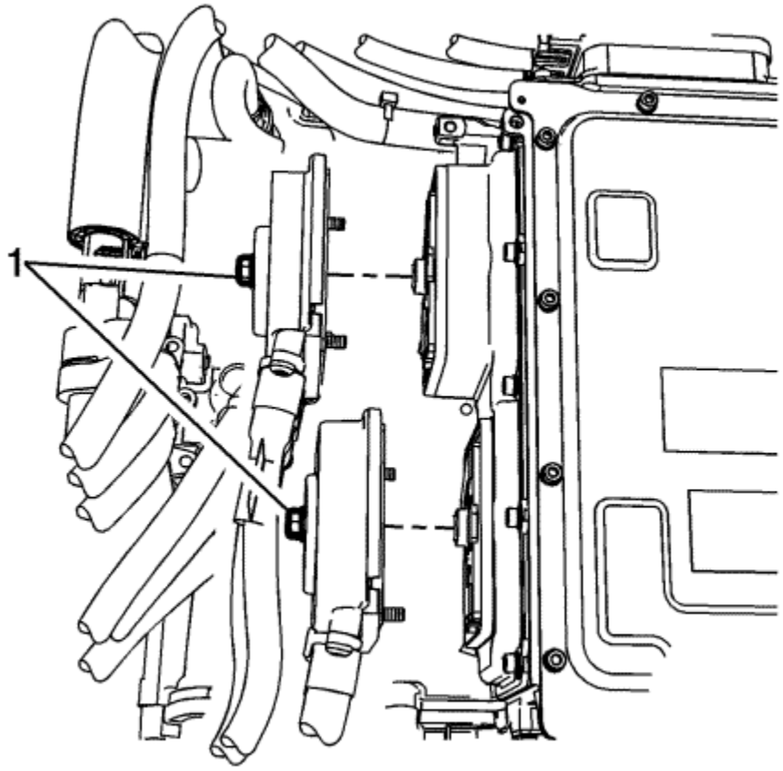

7. Remove the three-phase cable fasteners (1) and reposition the cables.
8. Discard the cable housing seals and the cable fastener seals.

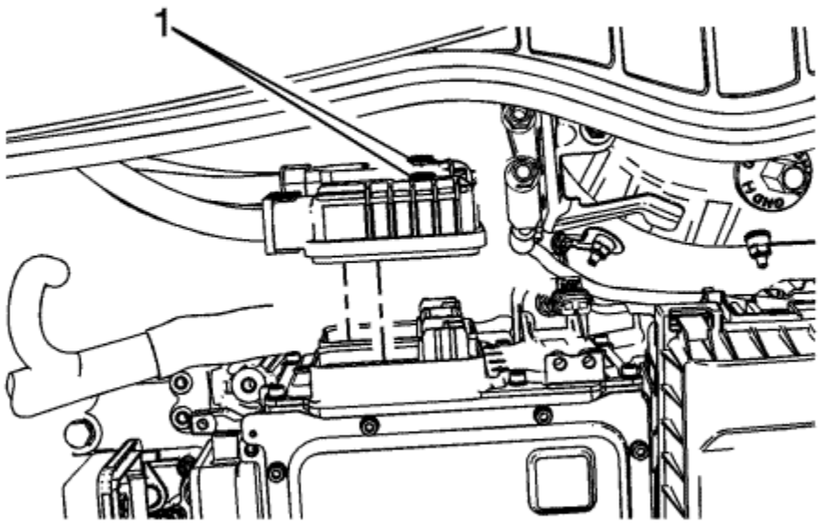

9. Remove the 300 volt cable fasteners (1) and reposition the cables.

   Note: The top cable should already be removed when the high-voltage disabling was performed.

10. Discard the 300 volt cable connector seals.

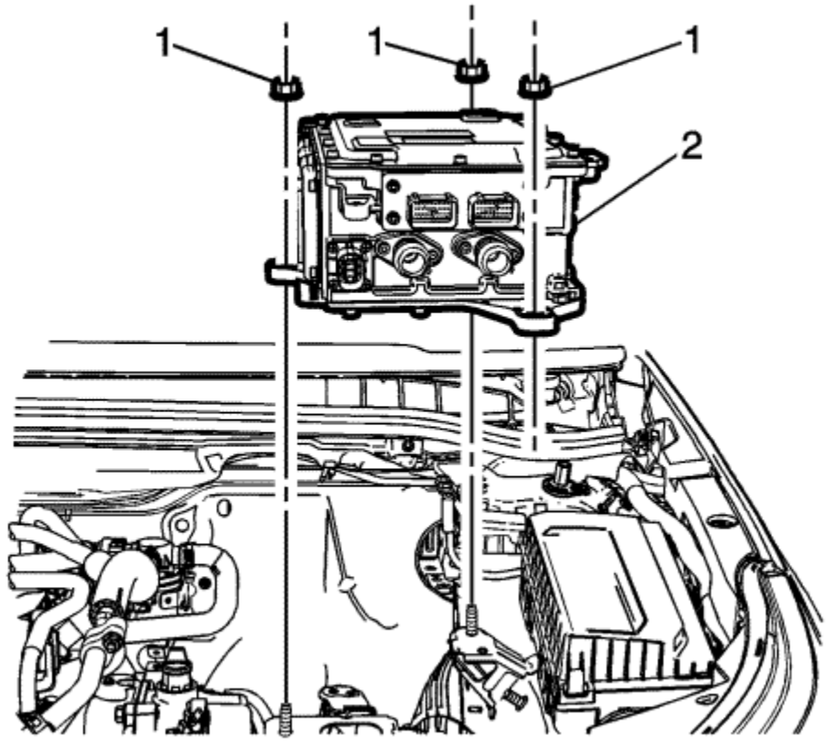

11. Remove the power inverter fasteners (1) and drive motor power inverter control module (2).

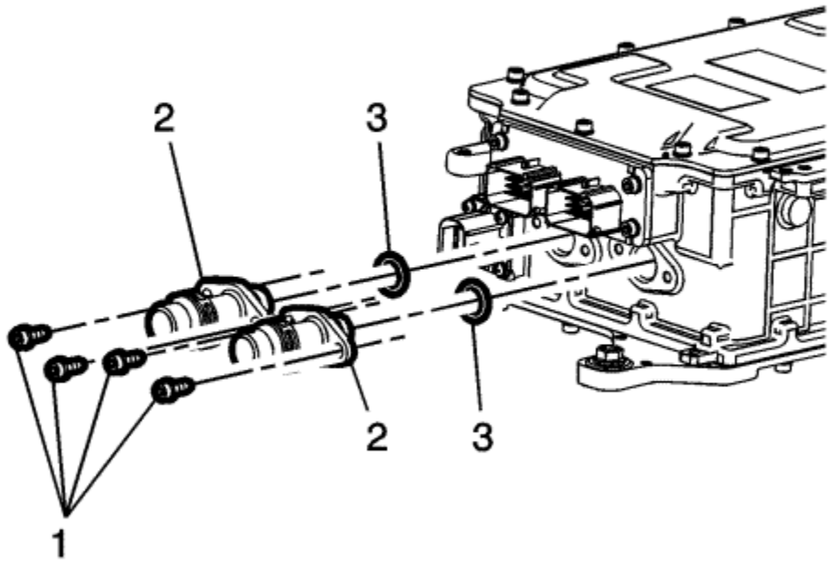

Note: Replacement power inverter module comes pre-assembled with new coolant fittings. Replace coolant fittings only if necessary.

12. Remove the coolant fitting fasteners (1) , the coolant fittings (2), and use NEW seals (3).

Installation Procedure

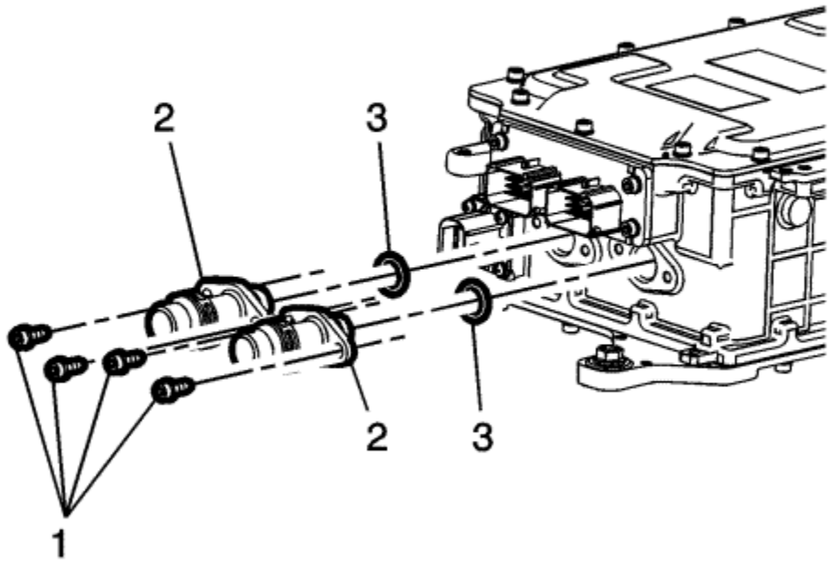

Note: It is possible to install the coolant fittings 180° out of position. Ensure the larger alignment tab is facing downwards.

1. Install NEW coolant tube seals (3) and the coolant fittings (2).
2. Tighten the coolant tube fasteners to **3 N·m (27 lb in)**.

Caution: Refer to Fastener Caution in the Preface section.

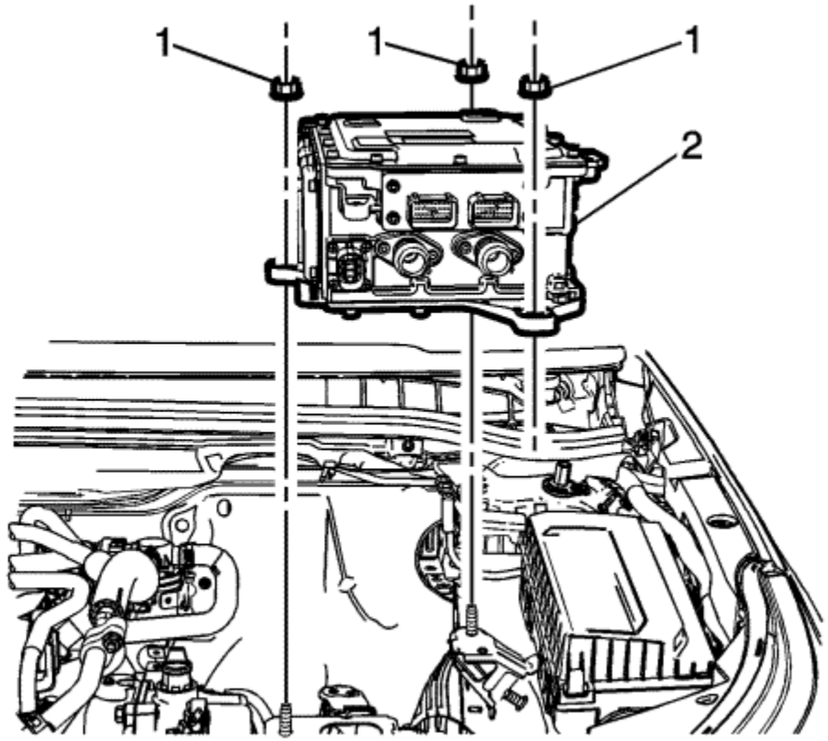

3. Install the drive motor power inverter control module (2) and tighten the fasteners (1) to **9 N·m (80 lb in)**.

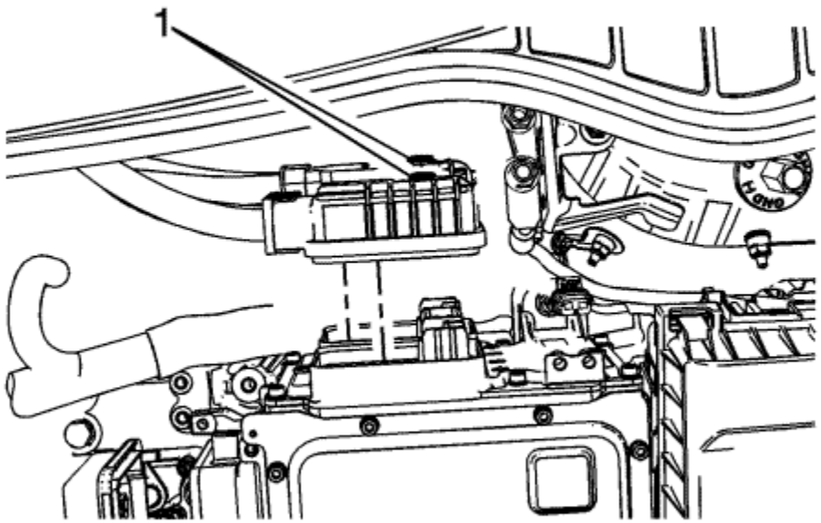

Note: Start the 300 volt cable fasteners by hand.

4. Install the 300 volt cables with NEW seals and tighten the fasteners (1) to **9 N·m (80 lb in)**.

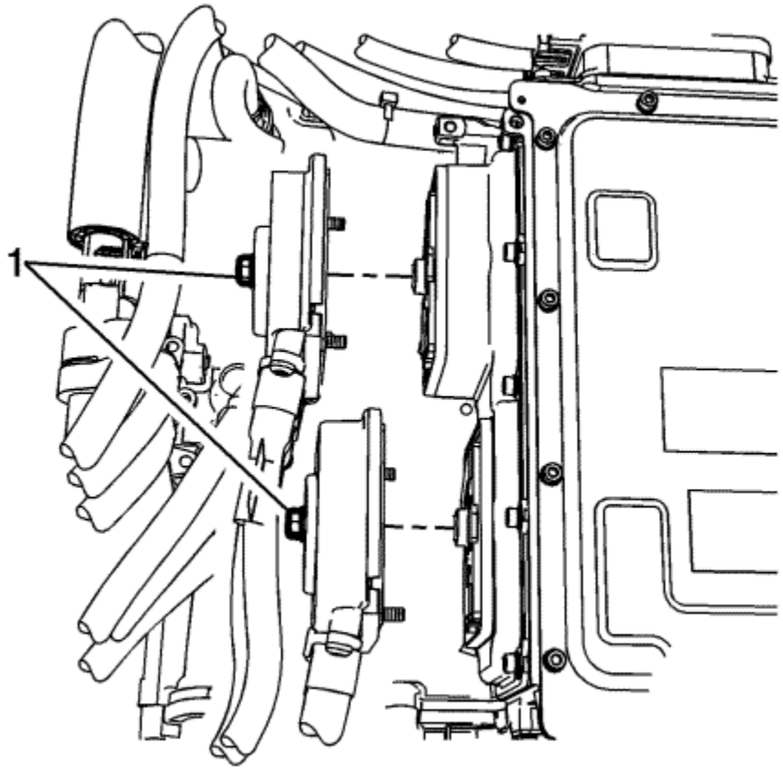

5. With NEW connector housing and fastener seals, install the three-phase cables and tighten the fasteners (1) to **9 N·m (80 lb in)**.

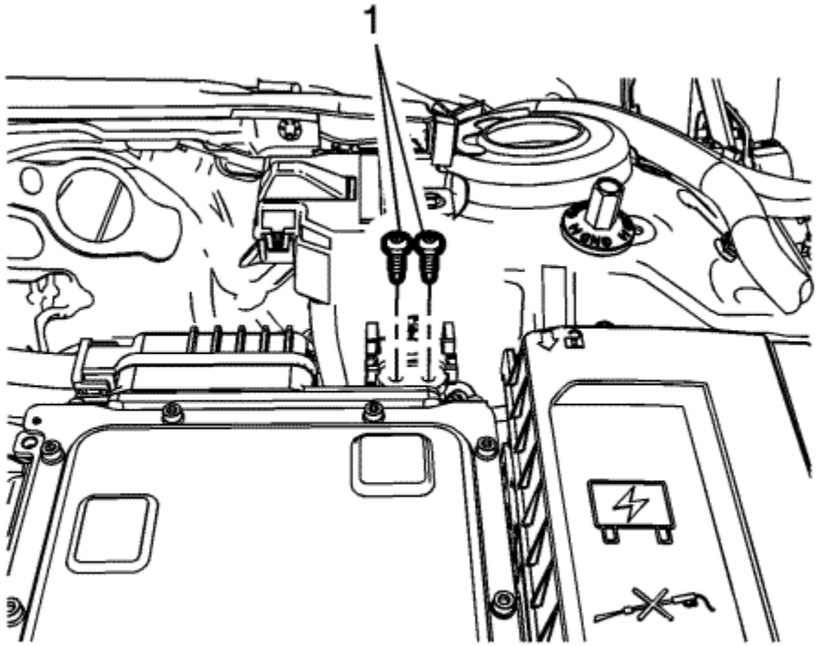

6. Install the high-voltage interlock loop connector fasteners (1) and tighten to **6 N·m (53 lb in)**.

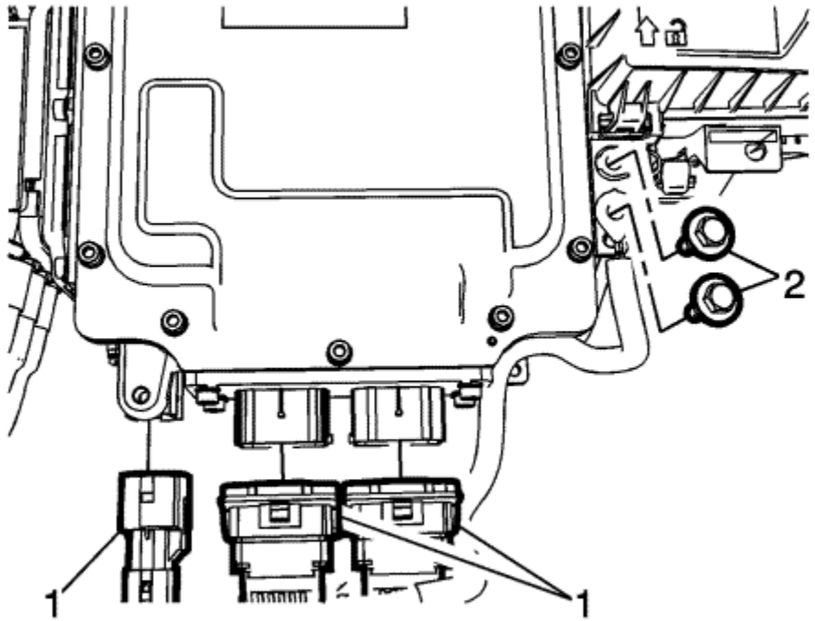

7. Connect the coolant pipes to the power inverter module. Refer to Drive Motor Power Inverter Module Cooling Inlet Hose Replacement and . Drive Motor Generator Control Module Radiator Outlet Hose Replacement .
8. Fill the cooling system. Refer to Drive Motor Generator Power Inverter Module Cooling System Draining and Filling .
9. Install the ground strap fasteners (2) and tighten to **9 N·m(80 lb in)**.
10. Connect the electrical connectors (1).
11. Install the power inverter module cover. Refer to Drive Motor Generator Power Inverter Module Cover Replacement .
12. Enable the high-voltage system. Refer to High-Voltage Enabling .
13. For control module programming and set-up procedures, refer to Control Module References .

&#169© Copyright Chevrolet. All rights reserved

Accessory DC Power Control Module Replacement

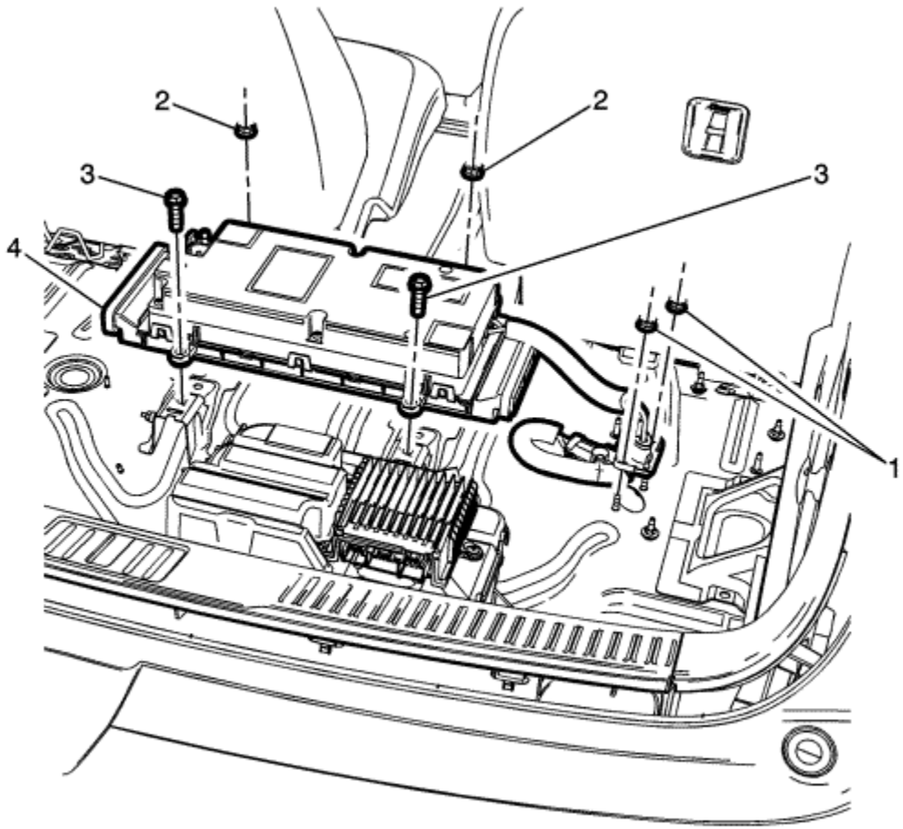

Callout	Component Name
Danger: Always perform the High-Voltage Disabling procedure prior to servicing any High Voltage component or connection. Personal Protection Equipment (PPE) and proper procedures must be followed. The High-Voltage Disabling procedure will perform the following tasks: Identify how to disable high voltage.	

-
- Identify how to test for the presence of high voltage.
- Identify conditions under which high voltage is always present and personal protection equipment (PPE) and proper procedures must be followed.

Before working on any high-voltage system, be sure to wear the following Personal Protection Equipment:

- Safety goggles with appropriate side shields when within 15 metres (50 feet) of the vehicle, either indoors or outdoors.
- Certified and up-to-date Class "0" Insulation gloves rated at 1000 V with leather protectors.
  - Visually and functionally inspect the gloves before use.
  - Wear the Insulation gloves with leather protectors at all times when working with the high-voltage battery assembly, whether the system is energised or not.

Failure to follow the procedures exactly as written may result in serious injury or death.

Preliminary Procedures

1. Disable the high-voltage system. Refer to High Voltage Disabling .
2. Remove the accessory DC power control module cooling air inlet duct. Refer to Accessory DC Power Control Module Cooling Air Inlet Duct Replacement .
3. Remove the accessory DC power control module cooling air duct. Refer to Accessory DC Power Control Module Cooling Air Duct Replacement .
4. Disconnect the negative and positive cables from the accessory DC power control module. Refer to Battery Positive and Negative Cable Replacement .

1	Battery Positive and Negative Cable Nut (Qty: 2) **Caution:** Refer to Fastener Caution in the Preface section. **Tighten** 9 N·m (80 lb in)
2	Accessory DC Power Control Module Nut (Qty: 2) **Caution:** Refer to Fastener Caution in the Preface section. **Tighten** 22 N·m (16 lb ft)
3	Accessory DC Power Control Module Bolt (Qty: 2) **Tighten** 19 N·m (14 lb ft)
4	Accessory DC Power Control Module **Procedure** 1. Raise the vehicle to access the connector. Refer to Lifting and Jacking the Vehicle . 2. Disconnect the electrical connector underneath the vehicle.

&#169© Copyright Chevrolet. All rights reserved

Accessory DC Power Control Module Description and Operation

Location

The 14 V Power Module, also called the Accessory DC Power Control Module, is located in the rear trunk compartment underneath the floor stowage trim panel. It is attached to the chassis with four fasteners and connected to a plastic cooling duct. The 14 V Power Module has a high-voltage pigtail that passes through the floor of the rear compartment and connects to a high voltage cable that comes from the hybrid battery pack. Also connected to the 14 V Power Module are the 12 V cables + positive and - negative, and a signal connector for serial data.

Operating Functions

The 14 V Power Module is an electronic device that takes the place of the generator on a traditional vehicle. On a hybrid or electric vehicle the 14 V power module converts high voltage (300 V) direct current (DC) to low voltage (12 V) DC for accessory electrical operation and to charge the 12 volt battery.

Normally, the 14 V power module only supplies 12 volts DC when the vehicle is under a normal drive cycle. However there are certain instances when the vehicle is being charged through a standard wall socket where the14 V power module operation is required to sustain the 12 volt battery.

The 14 V power module is capable of supplying up to 180 Amps of 12 volt DC.

Communication and Hosted Diagnostics

The 14 V power module has internal diagnostic tests that run at both power-up and during operation. All DTCs from the 14 V power module are reported to and hosted by the hybrid powertrain control module. The 14 V power module only communicates with the hybrid powertrain control module and only over serial data.

Circuit Inputs

Inputs to the 14 V power module include the high voltage and 12 volt circuits. The 14 V power module also has two 12 volt discrete inputs, Accessory and Run/Crank, either one has to be at a high level in order for it to wake up. The 14 V power module is connected to the powertrain expansion communication circuit and communicates with the hybrid powertrain control module. The 14 V power module monitors various internal components for current, voltage and temperature. The 14 V power module will not begin supplying 12 volts DC until:

- Either the Accessory input or Run/Crank input are high, and
- The appropriate serial data enable signal is communicated by the hybrid powertrain control module.

The 14 V power module will not begin conversion of voltage however, until the appropriate serial data enable signal is sent by the hybrid powertrain control module.

For more information on the 12 V Battery Charging System, refer to Charging System Description and Operation .

Circuit Outputs

The only outputs supported by the 14 V power module are serial data communications and 12 volts DC which powers the 12 volt components in the vehicle and charges the 12 volt battery. Low-voltage 12 V cables on the hybrid/EV vehicle do not require unique colouring or servicing procedures.

&#169© Copyright Chevrolet. All rights reserved

Drive Motor Generator Power Inverter Module Description and Operation

Overview

The power inverter module, often referred to as the drive motor generator power inverter module, converts high voltage direct current (DC) electrical energy to 3 phase alternating current (AC) electrical energy. The power inverter module assembly is cooled with pre-mixed Dexcool® circulating through a cooling system that is separate from the engine cooling system. The hybrid cooling system utilises a heat exchanger at the front of the vehicle and electric pumps to circulate the coolant. The engine control module (ECM) monitors a temperature sensor in the hybrid cooling system and operates the radiator fan and the hybrid coolant pumps in response to system temperature.

High-Voltage Circuits

Direct Current (DC)

The power inverter module assembly is connected to the positive and negative terminals of the high voltage, (DC) drive motor generator battery. Both of the negative and positive high voltage DC battery poles are isolated from the vehicle chassis by a specific amount of resistance. Each high-voltage DC cable is switched ON or OFF by a high-voltage, high-current contactor relay contained within the drive motor generator battery assembly. All high-voltage DC negative and positive DC cables are individually shielded and orange in colour to alert the technician to the potential presence of high voltage. The electric air conditioning compressor high-voltage DC cables are externally connected at the power inverter module assembly.

Three-Phase Alternating Current (AC)

Three individual cables connect each phase of the drive motor to the power inverter module. Each individually shielded cable is orange in colour to alert the technician to the potential presence of high voltage. A single shielded cable connects the auxiliary transmission fluid pump to the power inverter module. This cable contains 3 individual wires that are connected to the 3 phases of the auxiliary transmission fluid pump. The cable is orange in colour to alert the technician to the potential presence of high voltage.

Low-Voltage Circuits

The 14 V power module, also called the accessory DC power control module is the device which converts high-voltage (300 V) DC to low-voltage (12V) DC for accessory electrical operation and to charge the 12 volt accessory battery.

Low-Voltage (12 V) Direct Current

Low-voltage (12 V) cables on the hybrid-electric vehicle do not require unique colouring or servicing procedures.

Drive Motor Generator Power Inverter Module

Overview

The power inverter module contains 3 motor control modules and the hybrid powertrain control module. Two of the motor control modules operate their respective drive motor generators based upon power inverter module commands. The third motor control module controls the auxiliary transmission fluid pump motor. The hybrid powertrain control module and the motor control modules share the power inverter module ignition voltage circuit, battery voltage circuits and chassis earth. All four modules are flash-programmable micro-processors.

Hybrid Powertrain Control Module

Location

The hybrid powertrain control module is a non-serviceable, flash-programmable micro-processor contained within the power inverter module.

Operating Functions

The hybrid powertrain control module is the main controller of powertrain operation. The hybrid powertrain control module determines when to perform normal operating modes such as electric mode, extended range mode and regenerative braking. The hybrid powertrain control module also operates in conjunction with the hybrid powertrain control module 2 to determine when to enable and disable the DC high-voltage circuits. Each motor control module operates the applicable motor based upon hybrid powertrain control module commands.

Communication and Hosted Diagnostics

The hybrid powertrain control module is the host controller for DTC information for the following control modules:

- 14 V power module
- Motor control module 1
- Motor control module 2
- Auxiliary transmission fluid pump motor control

These modules diagnose their own operation and determine when a fault condition is present. The 14 V power module communicates the diagnostic status to the hybrid powertrain control module over serial data.

All 3 motor control modules and the hybrid powertrain control module exchange information and commands on a serial peripheral interface bus internal communication circuit as well as the hi-speed hybrid GMLAN communication circuit.

In the event a hosted module communicates a fault condition, the hybrid powertrain control module will determine if one or more operating modes are affected and notify the vehicle operator by requesting the MIL illuminate and/or by displaying a message in the Driver Information Centre. In addition, the hybrid powertrain control module will store the associated DTC information for retrieval by a scan tool. Some hosted modules may require an ignition cycle to clear certain DTCs from the hybrid powertrain control

module.

Circuit Inputs

In addition to data parameters, the hybrid powertrain control module directly monitors the following signal circuits:

- Transmission shift selector internal mode switch direction and Park/Neutral switch signals
- Engine crankshaft position sensor signal
- High-voltage interlock circuit

Motor Control Modules

Location

Both the electric motor generators and the auxiliary transmission fluid pump motor are located within the transmission. They are each controlled by their own motor control module, each module is a flash-programmable micro-processor. Each motor control module is contained within the drive motor generator power inverter control module assembly. Also contained within the drive motor generator power inverter control module assembly is the hybrid powertrain control module micro-processor.

Operating Functions

The motor control modules operate their respective motors based upon hybrid powertrain control module commands. Each motor control module controls the speed, direction and output torque of its respective traction motor or the auxiliary transmission fluid pump motor through the sequencing actuation of high-current switching transistors called insulated gate bipolar transistors.

Communication and Hosted Diagnostics

In addition to the internal serial peripheral interface bus communication circuit that the hybrid powertrain control module and each motor control module control use to communicate, the motor control module controls also communicate on the Hi-speed and Hybrid serial data circuits. The motor control module control does not store its own diagnostic trouble code (DTC) information. The hybrid powertrain control module will store motor control module control associated DTC information for retrieval by a scan tool. The scan tool can communicate directly with each motor control module control in order to retrieve data parameters only.

Circuit Inputs

In addition to data parameters, each motor control module control monitors its respective motor for voltage, current, speed, direction and temperature. Additionally, the motor control module control monitors the insulated gate bipolar transistor components for temperature and proper operation. Some of the motor control module control operation data is shared with the hybrid powertrain control module.

Circuit Outputs

Each motor control module controls its respective insulated gate bipolar transistor driver board that, in turn, controls each motor. The motors operate using 3-phase alternating current (AC) electricity. Three cables connect each motor generator to the power inverter module. Each individually shielded cable is orange in colour to alert the technician that the potential for high voltage is present. A single shielded cable connects the auxiliary transmission fluid pump to the power inverter module. This cable contains 3 individual wires that are connected to the 3 phases of the auxiliary transmission fluid pump. The cable is orange in colour to alert the technician to the potential presence of high voltage.

Accessory DC Power Control Module

Location

The accessory DC power control module, also called the 14 V power module, is located in the rear compartment. Refer to Accessory DC Power Control Module Description and Operation for description and operation information.

&#169© Copyright Chevrolet. All rights reserved

Electromagnetic Compatibility Description

Overview

Vehicles are typically subject to certain legal requirements that limit the amount of electromagnetic interference (EMI) that can be generated by the vehicle's electronic devices. Additionally, the electronic devices within the vehicle must be able to withstand a certain amount of EMI without affecting their operation. EMI is generated whenever electrical current flows through a circuit. The amount of EMI generated, or amplitude, is usually dependant upon the amount of current flow, amperage, the on-off pattern of current flow through the circuit and frequency. The EMI requirements are generally referred to as electromagnetic compatibility.

There are many ways of ensuring the vehicle meets electromagnetic compatibility requirements. These include:

- Adding capacitors and resistors to certain electrical circuits
- Regulating the frequency at which a component may operate
- Shielding the wires, cables and components

Circuit Design

The power inverter module, often referred to as the drive motor generator power inverter module, and the 14 V power module, also called the accessory DC power control module assembly, each contain filter capacitors connected to the high-voltage circuits. These capacitors are necessary to reduce the voltage spikes that occur as a result of the switching of current On and Off. Reducing voltage spikes reduces EMI. The frequency of current switching is also closely regulated. Too high a frequency can cause an increase in EMI generation.

Wiring/Cable Design

Different types of wire/cable shielding methods are utilised in the vehicle. Common types of circuit shielding include twisted-pair and internal braid or foil. Twisted pairs are typically used in circuits such as serial data circuits. The wire pair is twisted together at a particular turns-per-length ratio. Shielded cable is utilised for all other circuits requiring either protection from external EMI or to reduce EMI radiation of the cable itself into other nearby components or circuits.

High Voltage Cable

- 300 Volt Battery Positive and Negative Cable Assembly
- Power Inverter Module 3 Phase Cable Assembly
- Air Conditioning Compressor Assembly

The high-voltage cables utilise internal braid shielding. Typically, both ends of the internal braid shield are attached to chassis earth. All of the high-voltage, internally shielded cables are earthed at their cable end attachment points. Mounting blocks, where used, perform the shield to chassis earth connection. Connection points not serviced with a mounting block utilise a separate ring terminal.

Low and Intermediate Voltage Wiring

The signal circuits for the transmission sensors utilise shielding protection. The drive motor generator position sensor and temperature sensor circuits utilise internal foil shielding. The wiring harness external of the transmission assembly is connected to chassis earth with ring terminals at the drive motor control module assembly. The internal transmission wiring harness is attached to chassis earth with a ring terminal at the valve body assembly.

The auxiliary transmission fluid pump 3 phase cables utilise internal foil shielding. The wiring harness shield is connected to chassis earth within the motor generator power inverter module.

Component Shielding

Certain components utilise their structure to effectively shield EMI. Metal covers, chassis earthed metal cases and electro-magnetically conductive gaskets may all be part of a component's electromagnetic compatibility design.

Shielding Loss

A loss of proper shielding may result in poor AM band radio reception and/or incorrect sensor circuit readings depending upon the location of the shield loss. Damage that has penetrated to the insulated conductor of high voltage cables is not repairable. Minor damage to the outer sheathing can be repaired, refer to Drive Motor Generator Power Inverter Module Cable Inspection . Certain Low and Intermediate voltage shielded wiring harnesses may be repairable. Refer to Wiring Repairs and Splicing Twisted or Shielded Cable .

&#169© Copyright Chevrolet. All rights reserved

High Voltage Monitoring Systems Description

The hybrid system monitors several high-voltage components for attempted access. Additionally, a minimum amount of isolation resistance is maintained at all times between both negative and positive poles of the hybrid battery and the vehicle chassis. The drive motor generator power inverter module microprocessors and the hybrid powertrain control module 2 monitor the hybrid system for access and loss of isolation detection.

High Voltage Interlock Circuit

The High Voltage Interlock Circuit is a wire loop that passes through certain high-voltage components. The high-voltage interlock circuit is used to determine if access to high-voltage components is being attempted. The opening of these high-voltage components causes the high voltage interlock circuit to open. The hybrid system may react to the loss of high-voltage interlock circuit continuity by opening the high-voltage contactor relays and discharging the high voltage capacitors. The high-voltage interlock circuit signal is generated by the hybrid powertrain control module 2. The high voltage interlock circuit status is monitored by the hybrid powertrain control module 2, the hybrid powertrain control module and each drive motor control module.

High Voltage DC Chassis Isolation

The hybrid system monitors the electrical potential between high- voltage and the vehicle chassis. High voltage should always be isolated from the vehicle chassis by a certain amount of resistance to avoid the potential for a life threatening current path. In the event that a high voltage leak path is detected to the vehicle chassis, the hybrid system will set a diagnostic trouble code (DTC). High voltage DC chassis isolation is monitored by the motor control modules and the hybrid powertrain control module 2.

Testing for loss of isolation requires special tools and procedures. Because of the high voltages present in the hybrid system, a loss of isolation may occur due to insulation breakdown. Insulation breakdown typically occurs only when high voltages and/or current is present. Conditions such as insulation breakdown cannot be diagnosed with a typical DMM because high voltage is not used by the DMM when measuring resistance.

© Copyright Chevrolet. All rights reserved

Hybrid Modes of Operation Description

Vehicle Operating Modes Description

This vehicle is an Extended Range Electric Vehicle. It uses an electric propulsion system to drive the vehicle at all times. Electricity is the vehicle's primary source of energy, while gasoline is the secondary source.

The vehicle has two modes of operation - Electric and Extended Range. In both modes, the vehicle is propelled by the electric motors that are internal to the transmission. Electrical energy is converted into mechanical energy to drive the wheels and propel the vehicle. The vehicle's performance remains the same in either mode.

This overview is not a comprehensive list of all aspects of the Extended Range Electric Vehicle. Refer to Automatic Transmission 4ET50 Electronic Component Description for information regarding transmission operation. More detailled and comprehensive information is also available through the dealer training programme.

Electric Mode

Electric Mode is the primary mode of operation for this vehicle. While in electric mode the vehicle is powered by electrical energy stored in the high-voltage battery. The vehicle can operate in this mode for a range of up to 40-80 km (25-50 miles) until the battery has reached a low state of charge.

Extended Range Mode

When the vehicle reaches the end of its electric range, it switches to extended range mode. In this mode, electricity is produced by the motor generator which is driven by the internal combustion engine (ICE). This secondary source of electric power extends the vehicle range. Operation will continue in extended range mode until the vehicle can be plugged in to recharge the high-voltage battery and restore electric mode.

The high-voltage battery will continue to provide some power and work together with the ICE to provide peak performance when it is required, such as driving up a steep incline or during high acceleration. The high-voltage battery will not be recharged while in extended range mode.

Internal Combustion Engine (ICE) Starting

This vehicle does not use a 12 V starter motor to crank the ICE. A much more powerful 300 V motor/generator located within the transmission is utilised to crank the ICE. The 300 V drive motor generator can rotate the ICE to operating speed (800 RPM) within just a few hundred milliseconds. The 300 V drive motor generator allows near-instant starting of the ICE.

The vehicleis on-board computers determine when the ICE needs to run. Some of the normal vehicle conditions that force the ICE to run are:

- The high-voltage battery has a low state of charge
- The bonnet is open or not completely latched
- The ICE is needed to maintain the high-voltage battery temperature
- The ICE needs to run for maintenance
- Extremely low ambient temperatures

When the bonnet is open, the ICE will run without turning off. The high-voltage battery is neither charged nor discharged when this occurs.

Some high-voltage battery faults will cause the ICE to run without turning off.

Service Mode

The Service Mode is available for service and diagnostics, and to verify the proper operation of the MIL and may be required for emission inspection purposes. With the vehicle off, and the brake pedal not applied, pressing and holding the POWER button for more than 5 seconds will place the vehicle in Service Mode. The instruments and audio systems will operate as they do in ON/RUN, but the vehicle will not be able to be driven. The propulsion system will not start in Service Only Mode.

Engine Unavailable

If the vehicle runs out of fuel, or the power inverter module has detected the ICE will not start due to a malfunction, the vehicle can continue to be driven in electric mode.

Maintenance Modes

Engine Maintenance Mode

Engine maintenance mode runs the engine to keep it in good working condition when the vehicle has been operated in electric mode only for a prolonged period. Engine maintenance mode will run the ICE, even if the drive motor battery state of charge is sufficient to operate the vehicle in electric mode.

Fuel Maintenance Mode

When only electric mode is used for a prolonged period, fuel maintenance mode will run the ICE to use up old fuel. The ICE will run until enough fresh fuel is added or a low fuel level is detected. During fuel maintenance mode the ICE may cycle on and off.

Regenerative Braking

When the vehicle is coasting or braking the power inverter module may operate the drive motor generator in an electrical generation mode. Operating as electrical generator, the drive motor generator exerts a driveline load that helps to slow the vehicle. The electrical energy that the drive motor generator creates is transferred by the drive motor generator power inverter module to the drive motor generator battery assembly. Constant communication between the power inverter module and the electronic brake control module allows the blending of regenerative braking force with hydraulic braking force.

&#169© Copyright Chevrolet. All rights reserved

Special Tools

Illustration	Tool Number/ Description
	DT-44152 Jumper Harness, 20 Terminal
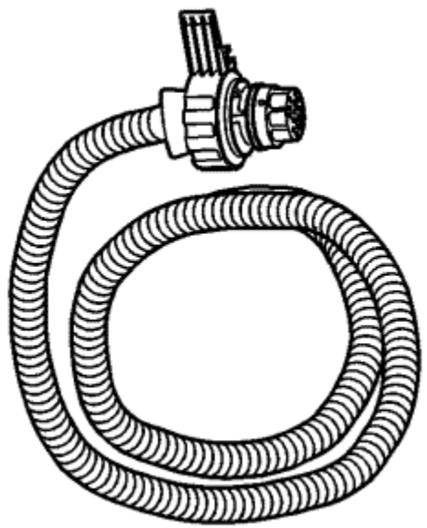	DT-47825-10 Jumper Harness
	DT-48493 Jumper Harness

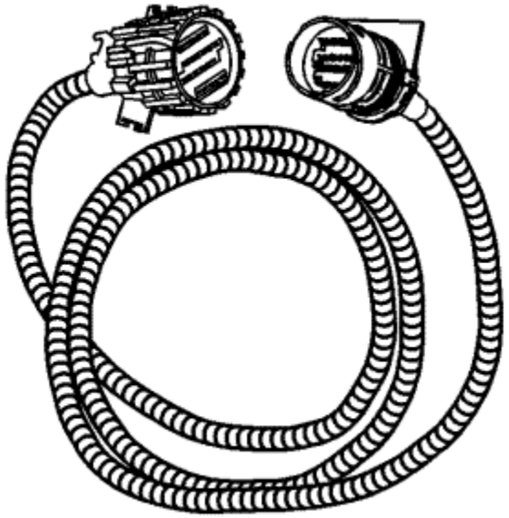	
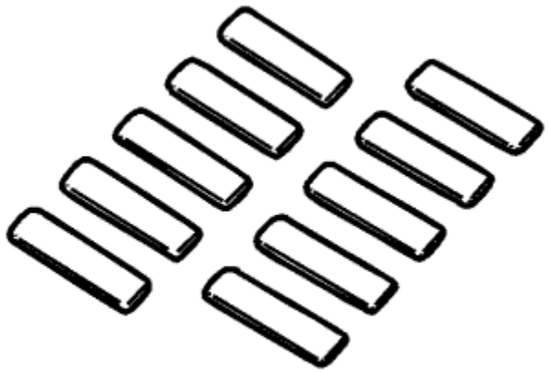	EL-48569 Terminal Covers

	EL-50322 Pre-Charge Test Tool

© Copyright Chevrolet. All rights reserved

Temperature Versus Resistance

Temperature Degrees C (Degrees F)	Resistance k ohm (typical)
-40°C (-40°F)	75.5
-20°C (-4°F)	21.6
0°C (32°F)	7.2
20°C (68°F)	2.7
40°C (104°F)	1.2
60°C (140°F)	0.5
80°C (176°F)	0.3
100°C (212°F)	0.16

© Copyright Chevrolet. All rights reserved

Hybrid Cooling System Specifications

Application	Specification	
	Metric	English
Pre-mixed Dexcool® (50/50 mixture of Dexcool® and deionised water)		
High-Voltage Battery Pack Cooling	6.2 L	6.6 qt
Power Electronics Cooling	2.8 L	3.0 qt

© Copyright Chevrolet. All rights reserved

Hybrid Cooling Schematics

Figure 1: Hybrid/EV Electronics Cooling
Figure 2: Hybrid/EV Battery Pack Cooling
Figure 3: Hybrid/EV Battery Modules - Temperature Sensors 1 through to 7
Figure 4: Hybrid/EV Battery Modules - Temperature Sensors 8 through to 16

© Copyright Chevrolet. All rights reserved

DTC P0480 or P0483

Diagnostic Instructions

- Perform the Diagnostic System Check - Vehicle prior to using this diagnostic procedure.
- Review Strategy Based Diagnosis for an overview of the diagnostic approach.
- Diagnostic Procedure Instructions provides an overview of each diagnostic category.

DTC Descriptors

DTC P0480: Cooling Fan 1 Control Circuit

DTC P0483: Cooling Fan System Performance

Circuit/System Description

The hybrid/EV powertrain control module 2 controls the radiator cooling fans. The cooling fans are controlled with a pulse width modulated (PWM) signal. The hybrid/EV powertrain control module 2 diagnoses any faults with the hardwire circuit to the engine control module. The engine control module sends a fan request PWM signal to the hybrid/EV powertrain control module 2 through a hardwire circuit. The hybrid/EV powertrain control module 2 operates in a pass-through mode for the engine control module fan request. The higher the duty cycle the higher the cooling fan speed.

Conditions for Running the DTC

The 12 V battery voltage is greater than or equal to 9 V.

Conditions for Setting the DTC

The hybrid/EV powertrain control module 2 has detected an open-circuit, short-circuit to earth or short-circuit to voltage fault on the fan control circuit.

Action Taken When the DTC Sets

DTC P0480 and P0483 are type B DTCs.

Conditions for Clearing the DTC

DTC P0480 and P0483 are type B DTCs.

Reference Information

Schematic Reference

Engine Cooling Schematics

Connector End View Reference

Component Connector End Views

Description and Operation

Hybrid Cooling System Description and Operation

Electrical Information Reference

- Circuit Testing
- Connector Repairs
- Testing for Intermittent Conditions and Poor Connections
- Wiring Repairs

DTC Type Reference

Powertrain Diagnostic Trouble Code (DTC) Type Definitions

Scan Tool Reference

Control Module References for scan tool information

Circuit/System Verification

Vehicle in Service Mode, with a scan tool, command the Cooling Fan Motor Command to 90%. Verify that the cooling fan motor speed is greater than 0 RPM and the cooling fans are operating.

Circuit/System Testing

Danger: Any hybrid/EV battery pack replacement shall be performed by High-Voltage Qualified Technicians only. The replacement procedure can be found in the service instruction and must be strictly followed at all times. The High-Voltage Qualified Technician is responsible for adherence to the manufacturer's service instructions as well as current national legal regulations. If the hybrid/EV battery pack needs to be replaced contact the Technical Assistance Centre for further instructions prior to removal of the battery pack.

1. Ignition OFF, disconnect the harness connector at the appropriate G10 cooling fan motor.
2. Test for less than 10 Ω between the ground circuit terminal 2 and ground.
   If greater than the specified range, test the ground circuit for an open/high resistance.
3. Vehicle in Service Mode, verify that a test lamp illuminates between the B+ circuit terminal 1 and earth.
   If the test lamp does not illuminate, test the B+ circuit for a short to ground or an open/high resistance. If the circuit tests normal and the B+ circuit fuse is open, test or replace G10 cooling fan motor.
4. Connect a test lamp between the control circuit terminal4 and the B+ circuit terminal 1.
5. Command the Cooling Fan Motor Command ON between 10% and 90% with a scan tool. Verify the test lamp changes between dim (10%) and bright (90%).
   If the test lamp is always bright, test the control circuit for a short-circuit to earth. If the circuit tests normal, replace the K114B hybrid/EV powertrain control module 2.
   If the test lamp is always dim or OFF, test the control circuit for a short-circuit to voltage or an open-circuit/high resistance. If the circuit tests normal, replace the K114B hybrid/EV powertrain control module 2.
6. If all circuits test normal, replace the appropriate G10 cooling fan motor.

Repair Instructions

Perform the Diagnostic Repair Verification after completing the repair.

- Cooling Fan and Shroud Replacement
- Control Module References for hybrid/EV powertrain control module 2 replacement, programming and set-up

&#169© Copyright Chevrolet. All rights reserved

DTC P0A7E

Diagnostic Instructions

- Perform the Diagnostic System Check - Vehicle prior to using this diagnostic procedure.
- Review Strategy Based Diagnosis for an overview of the diagnostic approach.
- Diagnostic Procedure Instructions provides an overview of each diagnostic category.

DTC Descriptors

DTC P0A7E: Hybrid/EV Battery Pack High Temperature

Circuit/System Description

The hybrid/EV battery pack has 16 hybrid/EV battery temperature sensors. The hybrid/EV battery temperature sensors are located on the top of the hybrid/EV batteries. The temperature sensor is a variable resistor that measures the temperature of the hybrid/EV battery cell groups. The hybrid/EV battery interface control module supplies 5 V to the signal circuit and a ground for the low-reference circuit. The hybrid/EV battery temperature sensor resistance changes with battery temperature. The lower the temperature, the higher the resistance of the sensor. The higher the temperature, the lower the resistance of the sensor. The hybrid/EV powertrain control module 2 uses the battery temperature sensors to determine the hybrid/EV battery module temperature to control the battery cooling system operation.

Conditions for Running the DTC

- The hybrid/EV powertrain control module 2 and battery energy control module are awake and communicating.
- None of the following DTCs are set: P0A9C, P0A9D, P0A9E, P0AC6, P0AC7, P0AC8, P0ACB, P0ACC, P0ACD, P0AE9, P0AEA, P0AEB, P0BC3, P0BC4, P0BC5, P0C34, P0C35, P0C36, P0C7D, P0C7E, P0C7F, P0C82, P0C83, P0C84, P0C89, P0C8A, P0C8B, P0C8E, P0C8F, P0C90, P0C93, P0C94, P0C95, P0C98, P0C99, P0C9A, P0CA9, P0CAA, P0CAB, P0CAE, P0CAF, P0CB0, P0CB3, P0CB4, P0CB5, P0CB8, P0CB9, P0CBA, P1E8E, P1E8F, P1E90, P1E91, P1E93, P1E94, P1E95, P1E96, P1E97, P1E99, P1E9A, P1E9B, P1E9C, P1E9D, P1E9F, P1EA0, P1EA1, P1EA2, P1EA3, P1EA5, P1EB1, P1EB2, P1EB3, P1EB4, P1EB5, U2401, U2603, U2604, U2605 and U2606.

Conditions for Setting the DTC

The maximum sensed temperature in the hybrid/EV battery is greater than 73.5°C (164.3°F).

Action Taken When the DTC Sets

- DTC P0A7E is a type A DTC.
- All of the battery contactors will open.

Conditions for Clearing the DTC

DTC P0A7E is a type A DTC.

Reference Information

Schematic Reference

Hybrid Cooling Schematics

Connector End View Reference

Component Connector End Views

Description and Operation

Hybrid Cooling System Description and Operation

Electrical Information Reference

- Circuit Testing
- Connector Repairs
- Testing for Intermittent Conditions and Poor Connections
- Wiring Repairs

DTC Type Reference

Powertrain Diagnostic Trouble Code (DTC) Type Definitions

Scan Tool Reference

Control Module References for scan tool information

Special Tools

EL-48900 HEV Safety Kit

For equivalent regional tools, refer to Special Tools .

Circuit/System Verification

Vehicle in Service Mode, observe the scan tool hybrid/EV powertrain control module 2 Maximum Hybrid Battery Module Temperature. The readings should be between -39 and +60°C (-38.2 and +140°F).

Circuit/System Testing

Danger: High voltage enabling and disabling shall be only performed by High Voltage Qualified Technicians. The procedures for high-voltage enabling/disabling can be found in the service instructions and must be strictly followed at all times. The usage of the Protocol High Voltage Disabling/Enabling is mandatory. The High-Voltage Qualified Technician is responsible for the adherence to the manufacturer's service instructions as well as current national legal regulations.

Failure to follow the procedures exactly as written may result in serious injury or death.

Questions regarding training can be answered by your national training centre.

Danger: Any hybrid/EV battery pack replacement shall be performed by High-Voltage Qualified Technicians only. The replacement procedure can be found in the service instruction and must be strictly followed at all times. The High-Voltage Qualified Technician is responsible for adherence to the manufacturer's service instructions as well as current national legal regulations. If the hybrid/EV battery pack needs to be replaced contact the Technical Assistance Centre for further instructions prior to removal of the battery pack.

1. Vehicle in Service Mode, verify that DTC P0A9C-P0A9E, P0AC6-P0ACD, P0AE9-P0AEB, P0BC3-P0BC5, P0C34-P0C36, P0C7D-P0C9A, or P0CA9-P0CBA P0C43-P0C45, P0C47, P0C4A, P0CD6, P0CD7, P0CD8, P0CE0-P0CE3, P0CE6, P0CE7, P0CE9, P0CED, P148A-P148C, P1EC6-P1EC8 or P1E8C is not set.
   If DTC is set, refer to Diagnostic Trouble Code (DTC) List - Vehicle .
2. If DTC P0A7E is set, replace the A4 hybrid/EV battery pack.

Repair Instructions

Perform the Diagnostic Repair Verification after completing the repair.

- Drive Motor Battery Replacement and Shipping Preparation
- Control Module References for hybrid/EV battery interface control module replacement, programming and set-up for the hybrid/EV battery pack replacement.

&#169© Copyright Chevrolet. All rights reserved

DTC P0A9C-P0A9E, P0AC6-P0ACD, P0AE9-P0AEB, P0BC3-P0BC5, P0C34-P0C36, P0C7D-P0C9A or P0CA9-P0CBA

Diagnostic Instructions

- Perform the Diagnostic System Check - Vehicle prior to using this diagnostic procedure.
- Review Strategy Based Diagnosis for an overview of the diagnostic approach.
- Diagnostic Procedure Instructions provides an overview of each diagnostic category.

DTC Descriptors

DTC P0A9C: Hybrid/EV Battery Temperature Sensor 1 Performance

DTC P0A9D: Hybrid/EV Battery Temperature Sensor 1 Circuit Low Voltage

DTC P0A9E: Hybrid/EV Battery Temperature Sensor 1 Circuit High Voltage

DTC P0AC6: Hybrid/EV Battery Temperature Sensor 2 Performance

DTC P0AC7: Hybrid/EV Battery Temperature Sensor 2 Circuit Low Voltage

DTC P0AC8: Hybrid/EV Battery Temperature Sensor 2 Circuit High Voltage

DTC P0ACB: Hybrid/EV Battery Temperature Sensor 3 Performance

DTC P0ACC: Hybrid/EV Battery Temperature Sensor 3 Circuit Low Voltage

DTC P0ACD: Hybrid/EV Battery Temperature Sensor 3 Circuit High Voltage

DTC P0AE9: Hybrid/EV Battery Temperature Sensor 4 Performance

DTC P0AEA: Hybrid/EV Battery Temperature Sensor 4 Circuit Low Voltage

DTC P0AEB: Hybrid/EV Battery Temperature Sensor 4 Circuit High Voltage

DTC P0BC3: Hybrid/EV Battery Temperature Sensor 5 Performance

DTC P0BC4: Hybrid/EV Battery Temperature Sensor 5 Circuit Low Voltage

DTC P0BC5: Hybrid/EV Battery Temperature Sensor 5 Circuit High Voltage

DTC P0C34: Hybrid/EV Battery Temperature Sensor 6 Performance

DTC P0C35: Hybrid/EV Battery Temperature Sensor 6 Circuit Low Voltage

DTC P0C36: Hybrid/EV Battery Temperature Sensor 6 Circuit High Voltage

DTC P0C7D: Hybrid/EV Battery Temperature Sensor 7 Performance

DTC P0C7E: Hybrid/EV Battery Temperature Sensor 7 Circuit Low Voltage

DTC P0C7F: Hybrid/EV Battery Temperature Sensor 7 Circuit High Voltage

DTC P0C82: Hybrid/EV Battery Temperature Sensor 8 Performance

DTC P0C83: Hybrid/EV Battery Temperature Sensor 8 Circuit Low Voltage

DTC P0C84: Hybrid/EV Battery Temperature Sensor 8 Circuit High Voltage

DTC P0C89: Hybrid/EV Battery Temperature Sensor 9 Performance

DTC P0C8A: Hybrid/EV Battery Temperature Sensor 9 Circuit Low Voltage

DTC P0C8B: Hybrid/EV Battery Temperature Sensor 9 Circuit High Voltage

DTC P0C8E: Hybrid/EV Battery Temperature Sensor 10 Performance

DTC P0C8F: Hybrid/EV Battery Temperature Sensor 10 Circuit Low Voltage

DTC P0C90: Hybrid/EV Battery Temperature Sensor 10 Circuit High Voltage

DTC P0C93: Hybrid/EV Battery Temperature Sensor 11 Performance

DTC P0C94: Hybrid/EV Battery Temperature Sensor 11 Circuit Low Voltage

DTC P0C95: Hybrid/EV Battery Temperature Sensor 11 Circuit High Voltage

DTC P0C98: Hybrid/EV Battery Temperature Sensor 12 Performance

DTC P0C99: Hybrid/EV Battery Temperature Sensor 12 Circuit Low Voltage

DTC P0C9A: Hybrid/EV Battery Temperature Sensor 12 Circuit High Voltage

DTC P0CA9: Hybrid/EV Battery Temperature Sensor 13 Performance

DTC P0CAA: Hybrid/EV Battery Temperature Sensor 13 Circuit Low Voltage

DTC P0CAB: Hybrid/EV Battery Temperature Sensor 13 Circuit High Voltage

DTC P0CAE: Hybrid/EV Battery Temperature Sensor 14 Performance

DTC P0CAF: Hybrid/EV Battery Temperature Sensor 14 Circuit Low Voltage

DTC P0CB0: Hybrid/EV Battery Temperature Sensor 14 Circuit High Voltage

DTC P0CB3: Hybrid/EV Battery Temperature Sensor 15 Performance

DTC P0CB4: Hybrid/EV Battery Temperature Sensor 15 Circuit Low Voltage

DTC P0CB5: Hybrid/EV Battery Temperature Sensor 15 Circuit High Voltage

DTC P0CB8: Hybrid/EV Battery Temperature Sensor 16 Performance

DTC P0CB9: Hybrid/EV Battery Temperature Sensor 16 Circuit Low Voltage

DTC P0CBA: Hybrid/EV Battery Temperature Sensor 16 Circuit High Voltage

Circuit/System Description

The hybrid/EV battery pack has 16 hybrid/EV battery temperature sensors. The hybrid/EV battery temperature sensors are located on the top of the hybrid/EV batteries. The temperature sensor is a variable resistor that measures the temperature of the hybrid/EV battery cell groups. The hybrid/EV battery interface control module supplies 5 V to the signal circuit and a ground for the low-reference circuit. The hybrid/EV battery temperature sensor resistance changes with battery temperature. The lower the temperature, the higher the resistance of the sensor. The higher the temperature, the lower the resistance of the sensor. The hybrid/EV powertrain control module 2 uses the battery temperature sensors to determine the hybrid/EV battery module temperature to control the battery cooling system operation.

Conditions for Running the DTC

P0A9D, P0A9E, P0AC7, P0AC8, P0ACC, P0ACD, P0AEA, P0AEB, P0BC4, P0BC5, P0C35, P0C36, P0C7E, P0C7F, P0C83, P0C84, P0C8A, P0C8B, P0C8F, P0C90, P0C94, P0C95, P0C99, P0C9A, P0CAA, P0CAB, P0CAF, P0CB0, P0CB4, P0CB5, P0CB9 and P0CBA

- The 12 V battery voltage is greater than 9 V.
- Hybrid/EV powertrain control module 2 and battery energy control module are awake and communicating
- None of the following DTCs are set: P1E93, P1E99, P1E9F, P1EA5, P1E8E, P1E94, P1E9A or P1EA0
- 2nd Protection Self test is not running

P0A9C, P0AC6, P0ACB, P0AE9, P0BC3, P0C34, P0C7D, P0C82, P0C89, P0C8E, P0C93, P0C98, P0CA9, P0CAE, P0CB3 and P0CB8

- Propulsion System Off Time is greater than the calibration
- Propulsion System Off Time is not faulted (ECM clock diagnostics)
- Off Board Charging Off Time is greater than the calibration
- Off Board Charging Off Time is not faulted (hybrid/EV powertrain control module 2 clock diagnostics)
- Battery Thermal Conditioning Off Time is greater than the calibration
- Battery Thermal Conditioning Off Time is not faulted (hybrid/EV powertrain control module 2 clock diagnostics)
- None of the following DTCs are set: P0A9C, P0A9D, P0A9E, P0AC6, P0AC7, P0AC8, P0ACB, P0ACC, P0ACD, P0AE9, P0AEA, P0AEB, P0BC3, P0BC4, P0BC5, P0C34, P0C35, P0C36, P0C7D, P0C7E, P0C7F, P0C82, P0C83, P0C84, P0C89, P0C8A, P0C8B, P0C8E, P0C8F, P0C90, P0C93, P0C94, P0C95, P0C98, P0C99, P0C9A, P0CA9, P0CAA, P0CAB, P0CAE, P0CAF, P0CB0, P0CB3, P0CB4, P0CB5, P0CB8, P0CB9, P0CBA, P1E8E, P1E8F, P1E90, P1E91, P1E93, P1E94, P1E95, P1E96, P1E97, P1E99, P1E9A, P1E9B, P1E9C, P1E9D, P1E9F, P1EA0, P1EA1, P1EA2, P1EA3, P1EA5, P1EB1, P1EB2, P1EB3, P1EB4, P1EB5, U2401, U2603, U2604, U2605 and U2606
- The average of the hybrid/EV battery temperature sensors shifts more than a calibrated amount.

Conditions for Setting the DTC

P0A9C, P0AC6, P0ACB, P0AE9, P0BC3, P0C34, P0C7D, P0C82, P0C89, P0C8E, P0C93, P0C98, P0CA9, P0CAE, P0CB3 and P0CB8

- The hybrid/EV battery temperature sensor is in normal operating range, but is 15°C (27°F) different from the other sensors.
- The difference between a hybrid/EV battery temperature sensor and the average of the other hybrid/EV battery temperature sensors is greater than 10°C (18°F).
- The range of the hybrid/EV battery temperature sensor during the period the temperature average was shifting is less than 1°C (2°F)

P0A9D, P0AC7, P0ACC, P0AEA, P0BC4, P0C35, P0C7E, P0C83, P0C8A, P0C8F, P0C94, P0C99, P0CAA, P0CAF, P0CB4 and P0CB9

The hybrid/EV battery temperature sensor is greater than 87.5°C (189.5°F).

P0A9E, P0AC8, P0ACD, P0AEB, P0BC5, P0C36, P0C7F, P0C84, P0C8B, P0C90, P0C95, P0C9A, P0CAB, P0CB0, P0CB5 and P0CBA

The hybrid/EV battery temperature sensor is -40°C (-40°F).

Action Taken When the DTC Sets

- DTCs P0A9C, P0A9D, P0A9E, P0AC6, P0AC7, P0AC8, P0ACB, P0ACC, P0ACD, P0AE9, P0AEA, P0AEB, P0BC3, P0BC4, P0BC5, P0C34, P0C35, P0C36, P0C7D, P0C7E, P0C7F, P0C82, P0C83, P0C84, P0C89, P0C8A, P0C8B, P0C8E, P0C8F, P0C90, P0C93, P0C94, P0C95, P0C98, P0C99, P0C9A, P0CA9, P0CAA, P0CAB, P0CAE, P0CAF, P0CB0, P0CB3, P0CB4, P0CB5, P0CB8, P0CB9, and P0CBA are type B DTCs.
- If eight sensors fail, the vehicle will operate in a reduced power mode and electric only engine On (EV) (engine will be running continuously).

Conditions for Clearing the DTC

DTCs P0A9C, P0A9D, P0A9E, P0AC6, P0AC7, P0AC8, P0ACB, P0ACC, P0ACD, P0AE9, P0AEA, P0AEB, P0BC3, P0BC4, P0BC5, P0C34, P0C35, P0C36, P0C7D, P0C7E, P0C7F, P0C82, P0C83, P0C84, P0C89, P0C8A, P0C8B, P0C8E, P0C8F, P0C90, P0C93, P0C94, P0C95, P0C98, P0C99, P0C9A, P0CA9, P0CAA, P0CAB, P0CAE, P0CAF, P0CB0, P0CB3, P0CB4, P0CB5, P0CB8, P0CB9, and P0CBA are type B DTCs.

Diagnostic Aids

Low or no coolant in the system may set a DTC P0A9D, P0AC7, P0ACC, P0AEA, P0BC4, P0C35, P0C7E, P0C83, P0C8A, P0C8F, P0C94, P0C99, P0CAA, P0CAF, P0CB4 or P0CB9.

Reference Information

Schematic Reference

Hybrid Cooling Schematics

Connector End View Reference

Component Connector End Views

Description and Operation

Hybrid Cooling System Description and Operation

Electrical Information Reference

- Circuit Testing
- Connector Repairs
- Testing for Intermittent Conditions and Poor Connections

- Wiring Repairs

DTC Type Reference

Powertrain Diagnostic Trouble Code (DTC) Type Definitions

Scan Tool Reference

Control Module References for scan tool information

Special Tools

EL-48900 HEV Safety Kit

For equivalent regional tools, refer to Special Tools .

Circuit/System Verification

Vehicle in Service Mode, observe the scan tool Hybrid Battery 1-16 temperature parameters. The readings should be between -39 and +87°C (-38.2 and + 188.6°F) with no greater than a 15°C (27°F) difference between any of the temperature sensor readings.

Circuit/System Testing

Danger: High voltage enabling and disabling shall be only performed by High Voltage Qualified Technicians. The procedures for high-voltage enabling/disabling can be found in the service instructions and must be strictly followed at all times. The usage of the Protocol High Voltage Disabling/Enabling is mandatory. The High-Voltage Qualified Technician is responsible for the adherence to the manufacturer's service instructions as well as current national legal regulations.

Failure to follow the procedures exactly as written may result in serious injury or death.

Questions regarding training can be answered by your national training centre.

Danger: Any hybrid/EV battery pack replacement shall be performed by High-Voltage Qualified Technicians only. The replacement procedure can be found in the service instruction and must be strictly followed at all times. The High-Voltage Qualified Technician is responsible for adherence to the manufacturer's service instructions as well as current national legal regulations. If the hybrid/EV battery pack needs to be replaced contact the Technical Assistance Centre for further instructions prior to removal of the battery pack.

1. Vehicle in Service Mode, verify that DTC P0C47, P0CE2, P0CE3, P1E8C, P1EC6 P1EC7, or P1EC8 is not set.
   If DTC is set, refer to Diagnostic Trouble Code (DTC) List - Vehicle .
2. If DTC P0A9C, P0A9D, P0A9E, P0AC6, P0AC7, P0AC8, P0ACB, P0ACC, P0ACD, P0AE9, P0AEA, P0AEB, P0BC3, P0BC4, P0BC5, P0C34, P0C35, P0C36, P0C7D, P0C7E, P0C7F, P0C82, P0C83, P0C84, P0C89, P0C8A, P0C8B, P0C8E, P0C8F, P0C90, P0C93, P0C94, P0C95, P0C98, P0C99, P0C9A, P0CA9, P0CAA, P0CAB, P0CAE, P0CAF, P0CB0, P0CB3, P0CB4, P0CB5, P0CB8, P0CB9, or P0CBA is set, replace the A4 hybrid/EV battery pack.

Repair Instructions

Perform the Diagnostic Repair Verification after completing the repair.

- Drive Motor Battery Replacement and Shipping Preparation
- Control Module References for hybrid/EV battery interface control module replacement, programming and set-up for the hybrid/EV battery pack replacement.

&#169© Copyright Chevrolet. All rights reserved

DTC P0C32

Diagnostic Instructions

- Perform the Diagnostic System Check - Vehicle prior to using this diagnostic procedure.
- Review Strategy Based Diagnosis for an overview of the diagnostic approach.
- Diagnostic Procedure Instructions provides an overview of each diagnostic category.

DTC Descriptor

DTC P0C32: Hybrid/EV Battery Pack Cooling System Performance

Circuit/System Description

The hybrid/EV powertrain control module 2 will monitor the battery temperature and set a DTC if the battery temperature can not be properly maintained.

Conditions for Running the DTC

- The 12 V system voltage is greater than 9 V.
- The vehicle is in propulsion system active mode.
  OR
- The vehicle is plugged into an AC source.
- DTC P1EC6 heater performance diagnostic, DTC P0C4A pump performance diagnostic and DTC P0534 R134A low-charge detection have completed
- The following DTCs are not set; P0534, P0C47, P0C4A, P0CE0, P0CE2, P0CE3, P1A5A, P1EC6, P1EC7, P1EC8 and P1F18

Conditions for Setting the DTC

- The vehicle is in Active Cooling mode.
- The Battery Average Temperature continuously exceeds 45°C (113°F) for 5 minutes.
  OR
- The vehicle is in Active Heating mode.
- The Battery Average Temperature is continuously below -25°C (-13°F) for 50 minutes.

Action Taken When the DTC Sets

DTC P0C32 is a type A DTC.

Conditions for Clearing the DTC

DTC P0C32 is a type A DTC.

Diagnostic Aids

- The hybrid/EV battery pack coolant pump may be faulty.
- The hybrid/EV battery pack coolant control valve may be leaking internally.
- The hybrid/EV battery pack heater may be defective.
- The hybrid/EV battery coolant level may be low or there may be no coolant.
- The AC refrigerant level may be low or the AC chiller may be inoperative.
- The hybrid/EV battery coolant lines may be restricted or blocked.

Reference Information

Schematic Reference

- Hybrid Cooling Schematics
- HVAC Schematics

Connector End View Reference

Component Connector End Views

Description and Operation

Drive Motor Battery System Description

Electrical Information Reference

- Circuit Testing
- Connector Repairs
- Testing for Intermittent Conditions and Poor Connections

- Wiring Repairs

DTC Type Reference

Powertrain Diagnostic Trouble Code (DTC) Type Definitions

Scan Tool Reference

Control Module References for scan tool information

Circuit/System Verification

Danger: Any hybrid/EV battery pack replacement shall be performed by High-Voltage Qualified Technicians only. The replacement procedure can be found in the service instruction and must be strictly followed at all times. The High-Voltage Qualified Technician is responsible for adherence to the manufacturer's service instructions as well as current national legal regulations. If the hybrid/EV battery pack needs to be replaced contact the Technical Assistance Centre for further instructions prior to removal of the battery pack.

1. Vehicle in Service Mode, verify that DTCs P0C47, P0C4A, P0CE0, P0CE2, P0CE3, P0CE6, P0CE7, P148A, P148B, P148C, P1EBE, P1EBF, P1EC3, P1EC4, P1EC5, P1EC6, P1EC7, P1EC8 or P1F18 is not set.
   If any of the DTCs is set, refer to Diagnostic Trouble Code (DTC) List - Vehicle
2. Observe the scan tool Battery Average Temperature parameter. The reading should be above -25°C (-13°F) and below 45° C (113° F).
   If the reading is below -25°C (-13°F) refer to Hybrid/EV Battery Cooling Diagnostic .
   If the reading is above 45°C (113°F) refer to Hybrid/EV Battery Cooling Diagnostic .

&#169© Copyright Chevrolet. All rights reserved

DTC P0C43-P0C45

Diagnostic Instructions

- Perform the Diagnostic System Check - Vehicle prior to using this diagnostic procedure.
- Review Strategy Based Diagnosis for an overview of the diagnostic approach.
- Diagnostic Procedure Instructions provides an overview of each diagnostic category.

DTC Descriptors

DTC P0C43: Hybrid/EV Battery Pack Coolant Temperature Sensor 1 Performance

DTC P0C44: Hybrid/EV Battery Pack Coolant Temperature Sensor 1 Circuit Low Voltage

DTC P0C45: Hybrid/EV Battery Pack Coolant Temperature Sensor 1 Circuit High Voltage

Circuit/System Description

The hybrid/EV battery has 2 hybrid/EV battery pack coolant temperature sensors. The hybrid/EV battery pack coolant temperature sensors are located in the coolant inlet (sensor 1) and the outlet (sensor 2) of the hybrid/EV battery. The temperature sensor is a variable resistor that measures the temperature of the hybrid/EV battery coolant. The hybrid/EV battery pack coolant temperature sensor resistance changes with battery coolant temperature. The lower the temperature, the higher the resistance of the sensor. The higher the temperature, the lower the resistance of the sensor. The battery energy control module (BECM) uses the hybrid/EV battery temperature sensors to determine the hybrid/EV battery pack temperature to control the battery cooling and heating operations.

Conditions for Running the DTC

P0C43

- The ignition is ON.
- The 12 V battery voltage is greater than or equal to 9 V.
- None of the following DTCs are set: P0C44, P0C45, P0C47, P0C4A, P0CD7, P0CD8, P1F18 or U0111.
- The coolant pump speed is greater than 20%.

P0C44

- The 12 V battery voltage is greater than 9 V.
- BECM is awake and communicating
- DTC P1A07 is not set.

P0C45

- The 12 V battery voltage is greater than 9 V.
- BECM is awake and communicating
- DTC P1A07 is not set.

Conditions for Setting the DTC

P0C43

The hybrid/EV battery pack coolant temperature sensor 1 reading is not within 28°C (50.4°F) of the hybrid/EV battery pack coolant temperature sensor 2 and is not within 28° C (50.4° F) of the Average Hybrid Battery Pack Temperature .

P0C44

The hybrid/EV battery pack coolant temperature sensor 1 is greater than 87.5°C (189.5°F).

P0C45

The hybrid/EV battery pack coolant temperature sensor 1 is less than or equal to -40°C (-40°F).

Action Taken When the DTC Sets

- DTC P0C43-P0C45 are type B DTCs.
- The active heating mode is disabled.

Conditions for Clearing the DTC

DTC P0C43-P0C45 are type B DTCs.

Diagnostic Aids

- Low or no coolant in the system may set a DTC P0C43.
- DTC P0C43-P0C45 will prevent battery heating and the vehicle will be unable to start in cold weather with battery temperatures below -25°C (-13°F).

Reference Information

Schematic Reference

Hybrid Cooling Schematics

Connector End View Reference

Component Connector End Views

Description and Operation

Hybrid Cooling System Description and Operation

Electrical Information Reference

- Circuit Testing
- Connector Repairs
- Testing for Intermittent Conditions and Poor Connections
- Wiring Repairs

DTC Type Reference

Powertrain Diagnostic Trouble Code (DTC) Type Definitions

Scan Tool Reference

Control Module References for scan tool information

Special Tools

EL-48900 HEV Safety Kit

For equivalent regional tools, refer to Special Tools .

Circuit/System Verification

1. Vehicle in Service Mode, observe the scan tool Hybrid/EV Battery Pack Coolant Temperature Sensor 1 parameter. The readings should be between -39 and +85°C (-38.2 and +185°F).
2. Compare the Hybrid/EV Battery Pack Coolant Temperature Sensor 1 and Hybrid/EV Battery Pack Coolant Temperature Sensor 2 parameters. The sensor readings should be within 28°C (50.4°F) of each other.

Circuit/System Testing

Danger: High voltage enabling and disabling shall be only performed by High Voltage Qualified Technicians. The procedures for high-voltage enabling/disabling can be found in the service instructions and must be strictly followed at all times. The usage of the Protocol High Voltage Disabling/Enabling is mandatory. The High-Voltage Qualified Technician is responsible for the adherence to the manufacturer's service instructions as well as current national legal regulations.

Failure to follow the procedures exactly as written may result in serious injury or death.

Questions regarding training can be answered by your national training centre.

Danger: Any hybrid/EV battery pack replacement shall be performed by High-Voltage Qualified Technicians only. The replacement procedure can be found in the service instruction and must be strictly followed at all times. The High-Voltage Qualified Technician is responsible for adherence to the manufacturer's service instructions as well as current national legal regulations. If the hybrid/EV battery pack needs to be replaced contact the Technical Assistance Centre for further instructions prior to removal of the battery pack.

1. Vehicle in Service Mode, verify that DTC P0AC1, P0B10, P0C44, P0C47, P0C4A or P1F18 is not set.
   If any DTC is set, refer to Diagnostic Trouble Code (DTC) List - Vehicle .
2. If DTC P0C43, P0C44, or P0C45 is set, replace the A4 hybrid/EV battery pack.

Repair Instructions

Perform the Diagnostic Repair Verification after completing the repair.

- Drive Motor Battery Replacement and Shipping Preparation
- Control Module References for battery energy control module replacement and hybrid battery interface control modules 1-4, programming and set-up for the hybrid/EV battery pack replacement.

&#169© Copyright Chevrolet. All rights reserved

Hybrid/EV Battery Pack Coolant Pump Malfunction - DTC P0C47, P0C4A or P1F18

Diagnostic Instructions

- Perform the Diagnostic System Check - Vehicle prior to using this diagnostic procedure.
- Review Strategy Based Diagnosis for an overview of the diagnostic approach.
- Diagnostic Procedure Instructions provides an overview of each diagnostic category.

DTC Descriptors

DTC P0C47: Hybrid/EV Battery Pack Coolant Pump Control Circuit

DTC P0C4A: Hybrid/EV Battery Pack Coolant Pump Performance

DTC P1F18: Hybrid/EV Battery Pack Coolant Pump Enable Circuit

Circuit/System Description

The hybrid/EV battery pack coolant pump circulates coolant through the drive motor battery coolant radiator, drive motor battery coolant cooler and the hybrid/EV battery pack to control the temperature of the hybrid/EV battery pack. An enable signal from the hybrid/EV powertrain control module 2 to the hybrid/EV battery pack coolant pump provides overall control of the pump. When this circuit is high, the pump can operate. The pump is controlled with a pulse-width modulated signal from the hybrid/EV powertrain control module 2 to the hybrid/EV battery pack coolant pump. The higher the duty cycle the higher the pump speed. The hybrid/EV battery pack coolant pump provides a hard-wired pulse-width modulated feedback signal to the hybrid/EV powertrain control module 2. During normal operation, this feedback signal provides pump speed information to the hybrid/EV powertrain control module 2. The hybrid/EV battery pack coolant pump has some self-diagnostic capability. If the hybrid/EV battery pack coolant pump determines there is an internal fault it provides this information on this same feedback circuit instead of pump speed information.

Conditions for Running the DTC

P0C47

- The 12 V battery voltage is greater than or equal to 9 V.
- The coolant pump enable is commanded.

P0C4A

- The 12 V battery voltage is greater than or equal to 9 V.
- The hybrid/EV powertrain control module 2 is awake and communicating with the battery energy control module.
- Runs once per ignition cycle when the propulsion system goes active.
- The heater performance diagnostic has passed.
- None of the following DTCs are set: P0C44, P0C45, P0C47, P1EC6, P1F18, U0111, U18B, or U2602.

P1F18

The 12 V battery voltage is greater than or equal to 9 V.

Conditions for Setting the DTC

P0C47

The hybrid/EV powertrain control module 2 detects the Coolant Pump Control circuit is open, shorted to voltage or shorted to earth.

P0C4A

The hybrid/EV powertrain control module 2 did not see the battery inlet temperature fall fast enough during the 18 second test period. The hybrid/EV powertrain control module 2 did not detect a decrease of 2° C (3.6° F) in 4 seconds within the 18 second test period.

P1F18

The hybrid/EV powertrain control module 2 detects the Coolant Pump Enable circuit is open, shorted to voltage or shorted to earth.

Action Taken When the DTC Sets

DTCs P0C47, P0C4A and P1F18 are type B DTCs.

Conditions for Clearing the DTC

DTCs P0C47, P0C4A and P1F18 are type B DTCs.

Diagnostic Aids

- Low or no coolant in the system may set a DTC P0C4A.
- P1EC5 may cause a DTC P0C4A

- P1F18 may cause a DTC P0C47

Reference Information

Schematic Reference

Hybrid Cooling Schematics

Connector End View Reference

Component Connector End Views

Description and Operation

Hybrid Cooling System Description and Operation

Electrical Information Reference

- Circuit Testing
- Connector Repairs
- Testing for Intermittent Conditions and Poor Connections
- Wiring Repairs

DTC Type Reference

Powertrain Diagnostic Trouble Code (DTC) Type Definitions

Scan Tool Reference

Control Module References for scan tool information

Circuit/System Verification

1. Vehicle in Service Mode, verify that DTC P0C43, P0C44, P0C45, P0CE0, P0CE2, P0CE3, P0D0A, P0D11, P1EBC, P1EC3, P1EC4, P1EC5, P1EC6, P1EC7 or P1EC8 is not set.
   If DTC is set, refer to Diagnostic Trouble Code (DTC) List - Vehicle
2. Vehicle in Service Mode, with the pump is disabled and not running, verify the scan tool parameters listed below:
   - Hybrid/EV Battery Pack Coolant Pump Command is less than 10%.

- Hybrid/EV Battery Pack Coolant Pump Feedback is 0%.
- Hybrid/EV Battery Pack Coolant Pump Speed is 25 RPM.

3. Vehicle OFF, connect the charge cord set. With the vehicle in Charge Mode, pump enabled and not running, verify the scan tool parameters listed below:
   - Hybrid/EV Battery Pack Coolant Pump Command is 10%.
   - Hybrid/EV Battery Pack Coolant Pump Feedback to be 50% +/-5%.
   - Hybrid/EV Battery Pack Coolant Pump Speed is 50 RPM.

   Note: The vehicle must be in Charge Mode and the pump is enabled and not running before proceeding to the next step.

4. Vehicle in Service Mode, command the Hybrid/EV Battery Pack Coolant Pump Heater to 90 kW with a scan tool. Observe the Hybrid/EV Battery Pack Coolant Pump Temperature Sensor 1 parameter. The temperature reading should rise after a 15 second delay, +/- 10 seconds, to above 54° C +/-5° C (129.2° F +/-10°).
5. With the pump enabled and running with the Hybrid/EV Battery Pack Coolant Pump Temperature Sensor 1 parameter above 54° C +/-5° C (129.2° F +/-10°), verify the scan tool parameters listed below:
   - Hybrid/EV Battery Pack Coolant Pump Command to be greater than 10%.
   - Hybrid/EV Battery Pack Coolant Pump Feedback to be 50% +/-5%.
   - Hybrid/EV Battery Pack Coolant Pump Speed is greater than 50 RPM.
6. Verify that the Hybrid/EV Battery Pack Coolant Pump Temperature Sensor 1 parameter dropped to below 40° C (104° F) after a 15 second delay, +/- 10 seconds, with the pump running.
   The Hybrid/EV Battery Pack Coolant Pump Temperature Sensor 1 parameter did not drop to below 40° C (104° F). Refer to Hybrid/EV Battery Cooling Diagnostic

Circuit/System Testing

Danger: Any hybrid/EV battery pack replacement shall be performed by High-Voltage Qualified Technicians only. The replacement procedure can be found in the service instruction and must be strictly followed at all times. The High-Voltage Qualified Technician is responsible for adherence to the manufacturer's service instructions as well as current national legal regulations. If the hybrid/EV battery pack needs to be replaced contact the Technical Assistance Centre for further instructions prior to removal of the battery pack.

1. Vehicle in Service Mode, verify that DTC P0C43, P0C44, P0C45, P1EC5, P1EC6, U0111, U185B, or U2602 is not set.
   If DTC is set, refer to Diagnostic Trouble Code (DTC) List - Vehicle .
2. Ignition OFF, disconnect the harness connector at the G37 hybrid/EV battery pack coolant pump.
3. Ignition OFF and all vehicle systems OFF. It may take up to 2 minutes for all vehicle systems to power down. Test for less than 5 Ω between the ground circuit terminal 4 and ground.
   If greater than the specified range, test the ground circuit for an open/high resistance.
4. Connect a test lamp between the B+ circuit terminal 5 and earth circuit terminal 4.
5. Vehicle in Service Mode, verify that a test lamp illuminates between the B+ circuit terminal 5 and earth circuit terminal 4.
   If the test lamp does not illuminate, test the B+ circuit for a short to ground or an open/high resistance. If the circuit tests normal and the B+ circuit fuse is open, test or replace the G37 hybrid/EV battery pack coolant pump.
6. Connect a test lamp between the enable circuit terminal 1 and earth circuit terminal 4.

7. Command the Hybrid Battery Pack Coolant Pump Command OFF (10%) and ON (90%) with a scan tool. Verify the test lamp turns OFF and ON when changing between the commanded states.
   If the test lamp is always illuminated at 10%, test the pump enable circuit for a short-circuit to voltage. If the circuit tests normal, replace the K114B hybrid/EV powertrain control module 2.
   If the test lamp does not illuminate at 90%, test the pump enable circuit for a short-circuit to earth or an open-circuit/high resistance. If the circuit tests normal, replace the K114B hybrid/EV powertrain control module 2.
8. Connect a test lamp between the control circuit terminal3 and the B+ circuit terminal 5.
9. Command the Hybrid Battery Pack Coolant Pump Command ON between 20% and 90% with a scan tool. Verify that a test lamp changes illumination between bright (20%) and dim (90%) between the control circuit terminal 3 and the B+ circuit terminal 5.
   If the test lamp is always dim or does not illuminate, test the control circuit for a short-circuit to voltage or an open-circuit/high resistance. If the circuit tests normal, replace the K114B hybrid/EV powertrain control module 2.
   If the test lamp is always bright, test the control circuit for a short-circuit to earth. If the circuit tests normal, replace the K114B hybrid/EV powertrain control module 2.
10. Verify the scan tool Hybrid/EV Battery Pack Coolant Pump Feedback parameter is less than 10%.
    If greater than the specified range, test the feedback circuit terminal 2 for a short-circuit to earth. If the circuit tests normal, replace the K114B hybrid/EV powertrain control module 2.
11. Install a 3 A fused jumper wire between the feedback circuit terminal 2 and the ground circuit terminal 4. Verify that the scan tool, Hybrid/EV Battery Pack Coolant Pump Feedback parameter is greater than 90%.
    If less than the specified range, test the feedback circuit for a short-circuit to voltage or an open-circuit/high resistance. If the circuit tests normal, replace the K114B hybrid/EV powertrain control module 2.
12. If all circuits test normal, replace the G37 hybrid/EV battery pack coolant pump.

Repair Instructions

Perform the Diagnostic Repair Verification after completing the repair.

- Drive Motor Battery Coolant Pump Replacement
- Control Module References for hybrid/EV powertrain control module 2 replacement, programming and set-up

&#169© Copyright Chevrolet. All rights reserved

DTC P0CD6-P0CD8

Diagnostic Instructions

- Perform the Diagnostic System Check - Vehicle prior to using this diagnostic procedure.
- Review Strategy Based Diagnosis for an overview of the diagnostic approach.
- Diagnostic Procedure Instructions provides an overview of each diagnostic category.

DTC Descriptors

DTC P0CD6: Hybrid/EV Battery Pack Coolant Temperature Sensor 2 Performance

DTC P0CD7: Hybrid/EV Battery Pack Coolant Temperature Sensor 2 Circuit Low Voltage

DTC P0CD8: Hybrid/EV Battery Pack Coolant Temperature Sensor 2 Circuit High Voltage

Circuit/System Description

The hybrid/EV battery has 2 hybrid/EV battery pack coolant temperature sensors. The hybrid/EV battery pack coolant temperature sensors are located in the coolant inlet (sensor 1) and the outlet (sensor 2) of the hybrid/EV battery. The temperature sensor is a variable resistor that measures the temperature of the hybrid/EV battery coolant. The hybrid/EV battery pack coolant temperature sensor resistance changes with battery coolant temperature. The lower the temperature, the higher the resistance of the sensor. The higher the temperature, the lower the resistance of the sensor. The battery energy control module (BECM) uses the hybrid/EV battery temperature sensors to determine the hybrid/EV battery pack temperature to control the battery cooling operation.

Conditions for Running the DTC

P0CD6

- The hybrid/EV powertrain control module 2 is awake and communicating.
- The 12 V battery voltage is greater than or equal to 9 V.
- None of the following DTCs are set: P0C47, P0C4A, P0CD7, P0CD8, U185B, or U2602.
- The coolant pump speed is greater than 20%.

P0CD7

- The 12 V battery voltage is greater than or equal to 9 V.
- The battery energy control module is awake and communicating.
- DTC P1A07 is not set.

P0CD8

- The 12 V battery voltage is greater than or equal to 9 V.
- The battery energy control module is awake and communicating.
- DTC P1A07 is not set.

Conditions for Setting the DTC

P0CD6

The hybrid/EV battery pack coolant temperature sensor 2 is not within 20°C (36°F) of the hybrid/EV battery pack coolant temperature sensor 1 and the Average Hybrid/EV Battery Pack Temperature.

P0CD7

The coolant temperature 2 is greater than or equal to 87.5°C (189.5°F).

P0CD8

The coolant temperature 2 is less than or equal to -40°C (-40°F).

Action Taken When the DTC Sets

DTC P0CD6-P0CD8 are type B DTCs.

Conditions for Clearing the DTC

DTC P0CD6-P0CD8 are type B DTCs.

Diagnostic Aids

- Low or no coolant in the system may set a DTC P0CD6.

- The hybrid/EV powertrain control module 2 will use battery pack cell temperatures as a default.

Reference Information

Schematic Reference

Hybrid Cooling Schematics

Connector End View Reference

Component Connector End Views

Description and Operation

Hybrid Cooling System Description and Operation

Electrical Information Reference

- Circuit Testing
- Connector Repairs
- Testing for Intermittent Conditions and Poor Connections
- Wiring Repairs

DTC Type Reference

Powertrain Diagnostic Trouble Code (DTC) Type Definitions

Scan Tool Reference

Control Module References for scan tool information

Special Tools

EL-48900 HEV Safety Kit

For equivalent regional tools, refer to Special Tools .

Circuit/System Verification

1. Vehicle in Service Mode, observe the scan tool Hybrid\EV Battery Pack Coolant Temperature Sensor 2 parameter. The readings should be between -39°C and +85°C (-38.2°F and +185°F).
2. Compare the Hybrid\EV Battery Pack Coolant Temperature Sensor 2 and Hybrid\EV Battery Pack Coolant Temperature Sensor 1 parameters. The sensor readings should be within 20°C (36°F) of each other.

Circuit/System Testing

Danger: High voltage enabling and disabling shall be only performed by High Voltage Qualified Technicians. The procedures for high-voltage enabling/disabling can be found in the service instructions and must be strictly followed at all times. The usage of the Protocol High Voltage Disabling/Enabling is mandatory. The High-Voltage Qualified Technician is responsible for the adherence to the manufacturer's service instructions as well as current national legal regulations.

Failure to follow the procedures exactly as written may result in serious injury or death.

Questions regarding training can be answered by your national training centre.

Danger: Any hybrid/EV battery pack replacement shall be performed by High-Voltage Qualified Technicians only. The replacement procedure can be found in the service instruction and must be strictly followed at all times. The High-Voltage Qualified Technician is responsible for adherence to the manufacturer's service instructions as well as current national legal regulations. If the hybrid/EV battery pack needs to be replaced contact the Technical Assistance Centre for further instructions prior to removal of the battery pack.

1. Vehicle in Service Mode, verify that DTC P0AC1, P0B10, P0C44, P0C47, P0C4A or P1F18 is not set.
   If any DTC is set, refer to Diagnostic Trouble Code (DTC) List - Vehicle .
2. If DTC P0CD6, P0CD7, or P0CD8 is set, replace the A4 hybrid/EV battery pack.

Repair Instructions

Perform the Diagnostic Repair Verification after completing the repair.

- Drive Motor Battery Replacement and Shipping Preparation
- Control Module References for battery energy control module replacement and hybrid battery interface control modules 1-4, programming and set-up for the hybrid/EV battery pack replacement.

&#169© Copyright Chevrolet. All rights reserved

DTC P0CE0, P0CE2, P0CE3, P1EC7 or P1EC8

Diagnostic Instructions

- Perform the Diagnostic System Check - Vehicle prior to using this diagnostic procedure.
- Review Strategy Based Diagnosis for an overview of the diagnostic approach.
- Diagnostic Procedure Instructions provides an overview of each diagnostic category.

DTC Descriptors

DTC P0CE0: Hybrid/EV Battery Pack Coolant Control Valve Performance

DTC P0CE2: Hybrid/EV Battery Pack Coolant Control Valve Control Circuit 1 Low Voltage

DTC P0CE3: Hybrid/EV Battery Pack Coolant Control Valve Control Circuit 1 High Voltage

DTC P1EC7: Hybrid/EV Battery Pack Coolant Control Valve Control Circuit 2 Low Voltage

DTC P1EC8: Hybrid/EV Battery Pack Coolant Control Valve Control Circuit 2 High Voltage

Circuit/System Description

The hybrid/EV battery pack coolant control valve drive circuit in the hybrid/EV powertrain control module 2 is two control circuit, terminal 1 (Drive A) and terminal 2 (Drive B), that can drive the valve motor in a forward or reverse direction. One end position of the range is the Radiator connection, the middle position is the bypass position and the other end is the chiller position.

Conditions for Running the DTC

P0CE0

- Vehicle in Service Mode and the Propulsion System transitions to Active.
- The 12 V battery voltage is greater than or equal to 10 V.

- The battery minimum temperature and battery inlet temperature are above -26°C (-14.8°F)
- None of the following DTCs are set: P0CE2, P0CE3, P0CE6, P0CE7, P1EC7, P1EC8

OR

- Hybrid/EV powertrain control module 2 is awake
- The 12 V battery voltage is greater than or equal to 10 V.
- The battery minimum temperature and battery inlet temperature are above -26°C (-14.8°F)
- None of the following DTCs are set: P0CE2, P0CE3, P0CE6, P0CE7, P1EC7, P1EC8

P0CE2, P1EC7, P0CE3, and P1EC8

- The hybrid/EV powertrain control module 2 is awake and communicating.
- The 12 V battery voltage is greater than or equal to 10 V.
- Hybrid/EV Battery Pack Coolant Control Valve is being commanded to move.

Conditions for Setting the DTC

P0CE0

- The control circuit terminal 1 (Drive A) or control circuit terminal 2 (Drive B) is open.
  OR
- If during any learn procedure the valve does not reach the end-stops of approximately 42% and 50% in 30 seconds or goes past the end-stops of approximately 30% and 70% or the difference between the two end-stops is less than 15% or greater than 33%.
  OR
- Hybrid/EV Battery Pack Coolant Control Valve has not reached its commanded position within 30 seconds.
  OR
- Hybrid/EV Battery Pack Coolant Control Valve feedback position is not within 3% of valve commanded position.
  OR
- Hybrid/EV Battery Pack Coolant Control Valve feedback position signal is erratic and its noise level sum is greater than 12% over 4 seconds.

P0CE2

The hybrid/EV powertrain control module 2 detects control circuit terminal 1 (Drive A) is grounded during a period when the hybrid/EV powertrain control module 2 is commanding 12 V on the control circuit terminal 1 (Drive A). This occurs when the valve is commanded towards the 100% chiller position.

P0CE3

The hybrid/EV powertrain control module 2 detects control circuit terminal 1 (Drive A) has 12 V during a period when the hybrid/EV powertrain control module 2 is

commanding 0 volts on the control circuit terminal 1 (Drive A). This occurs when the valve is commanded towards the radiator position.

P1EC7

The hybrid/EV powertrain control module 2 detects control circuit terminal 2 (Drive B) is earthed during a period when the hybrid/EV powertrain control module 2 is commanding 12 V on the control circuit terminal 2 (Drive B). This occurs when the valve is commanded towards the radiator position.

P1EC8

The hybrid/EV powertrain control module 2 detects control circuit terminal 2 (Drive B) has 12 V during a period when the hybrid/EV powertrain control module 2 is commanding 0 volts on the control circuit terminal 2 (Drive B). This occurs when the valve is commanded towards the 100% chiller position.

Action Taken When the DTC Sets

DTCs P0CE0, P0CE2, P0CE3, P1EC7, and P1EC8 are type B DTCs

Conditions for Clearing the DTC

- DTCs P0CE0, P0CE2, P0CE3, P1EC7, and P1EC8 are type B DTCs
- The Hybrid/EV Battery Pack Coolant Control Solenoid Valve Learn will need to be performed.

Diagnostic Aids

- Verify that the wire harness connector does not have corrosion when diagnosing a DTC P0CE0, P0CE2, P1EC7, P0CE3, or P1EC8.
- After a valve replacement the Hybrid/EV Battery Pack Coolant Control Solenoid Valve Learn will need to be performed to prevent resetting DTCs.

Reference Information

Schematic Reference

Hybrid Cooling Schematics

Connector End View Reference

Component Connector End Views

Description and Operation

Hybrid Cooling System Description and Operation

Electrical Information Reference

- Circuit Testing
- Connector Repairs
- Testing for Intermittent Conditions and Poor Connections
- Wiring Repairs

DTC Type Reference

Powertrain Diagnostic Trouble Code (DTC) Type Definitions

Scan Tool Reference

Control Module References for scan tool information

Circuit/System Verification

Vehicle in Service Mode, with a scan tool, command the Hybrid/EV Battery Pack Coolant Control Solenoid Valve Command between 10%-90%. Verify that the Hybrid/EV Battery Pack Coolant Control Solenoid Valve Feedback matches the command. There may be a delay between the command and valve response.

Circuit/System Testing

Danger: Any hybrid/EV battery pack replacement shall be performed by High-Voltage Qualified Technicians only. The replacement procedure can be found in the service instruction and must be strictly followed at all times. The High-Voltage Qualified Technician is responsible for adherence to the manufacturer's service instructions as well as current national legal regulations. If the hybrid/EV battery pack needs to be replaced contact the Technical Assistance Centre for further instructions prior to removal of the battery pack.

1. Vehicle in Service Mode, verify that DTC P0CE6 or P0CE7 are not set.
   If DTC P0CE6 or P0CE7 is set, refer to Diagnostic Trouble Code (DTC) List - Vehicle .
2. Verify that DTC P0CE0 is not set.
   If DTC P0CE0 is set, with a scan tool, perform the Hybrid/EV Battery Pack Coolant Control Solenoid Valve Learn procedure.
3. Ignition OFF, and all vehicle systems OFF, it may take up to 2 minutes for all vehicle systems to power down, operate the vehicle within the conditions for running the DTC.
4. Verify that the DTC does not reset.
5. Ignition OFF, disconnect the harness connector at the Q65 hybrid/EV battery pack coolant control valve.
6. Connect a test lamp between control circuit terminal 1 and control circuit terminal 2.
7. Vehicle in Service Mode, command the Hybrid/EV Battery Pack Coolant Control Solenoid Valve between Normal and Bypass and observe the test lamp. Verify that the test lamp illuminates momentarily between each command.
   If the test lamp does not illuminate, test both control circuits for an open-circuit/high resistance on either control circuit. If the circuits test normal, replace the K114B

hybrid/EV powertrain control module 2. After the repair, with a scan tool, perform the Hybrid/EV Battery Pack Coolant Control Solenoid Valve Learn procedure.
If the test lamp illuminates only on one command, test both control circuits for a short-circuit to voltage or short-circuit to earth on either control circuit. If the circuits test normal, replace the K114B hybrid/EV powertrain control module 2. After the repair, with a scan tool, perform the Hybrid/EV Battery Pack Coolant Control Solenoid Valve Learn procedure.

8. If all circuits test normal, test or replace the Q65 hybrid/EV battery pack coolant control valve.

Repair Instructions

Perform the Diagnostic Repair Verification after completing the repair.

- Drive Motor Battery Coolant Flow Control Valve Replacement
- Control Module References for hybrid/EV powertrain control module 2 replacement, programming and set-up

&#169© Copyright Chevrolet. All rights reserved

DTC P0CE6 or P0CE7

Diagnostic Instructions

- Perform the Diagnostic System Check - Vehicle prior to using this diagnostic procedure.
- Review Strategy Based Diagnosis for an overview of the diagnostic approach.
- Diagnostic Procedure Instructions provides an overview of each diagnostic category.

DTC Descriptors

DTC P0CE6: Hybrid/EV Battery Pack Coolant Control Valve Position Sensor Circuit Low Voltage

DTC P0CE7: Hybrid/EV Battery Pack Coolant Control Valve Position Sensor Circuit High Voltage

Circuit/System Description

The valve provides position feedback to the hybrid/EV powertrain control module 2 based on a potentiometer in the valve. The hybrid/EV powertrain control module 2 uses this feedback to monitor the valve position. Different valve positions correspond to different resistance values. The hybrid/EV powertrain control module 2 determines the resistance values corresponding to the end stop positions of the valve by moving the valve to an end-stop and back to its original position when the ignition is first turned on. This is referred to as the hybrid/EV powertrain control module 2 "diagnostic learn" the valve. This provides a valve shaft breakage test and allows the hybrid/EV powertrain control module 2 to "learn" the position feedback value that corresponds to that end-stop. The end-stop that is used at each Vehicle in Service Mode alternates between each end, the radiator end one time, the chiller end the next time, the radiator end the next time, etc.

Conditions for Running the DTC

The 12 V battery voltage is greater than 9 V.

Conditions for Setting the DTC

P0CE6

Feedback Voltage is less than 28% of the 5 V reference voltage.

P0CE7

Feedback Voltage is greater than 72% of the 5 V reference voltage.

Action Taken When the DTC Sets

- DTCs P0CE6 and P0CE7 are type B DTCs.
- The hybrid/EV powertrain control module 2 uses only the two extreme positions of the valve, radiator and 100% chiller

Conditions for Clearing the DTC

DTCs P0CE6 and P0CE7 are type B DTCs.

Diagnostic Aids

After a valve replacement the Hybrid/EV Battery Pack Coolant Control Solenoid Valve Learn will need to be performed to prevent resetting DTCs.

Reference Information

Schematic Reference

Hybrid Cooling Schematics

Connector End View Reference

Component Connector End Views

Description and Operation

Hybrid Cooling System Description and Operation

Electrical Information Reference

- Circuit Testing
- Connector Repairs
- Testing for Intermittent Conditions and Poor Connections
- Wiring Repairs

DTC Type Reference

Powertrain Diagnostic Trouble Code (DTC) Type Definitions

Scan Tool Reference

Control Module References for scan tool information

Circuit/System Verification

Vehicle in Service Mode, with a scan tool, command the Hybrid/EV Battery Pack Coolant Control Solenoid Valve Command between 10%-90%. Verify that the Hybrid/EV Battery Pack Coolant Control Solenoid Valve Feedback matches the command. There may be a 2-5 second delay between the command and valve response.

Circuit/System Testing

Danger: Any hybrid/EV battery pack replacement shall be performed by High-Voltage Qualified Technicians only. The replacement procedure can be found in the service instruction and must be strictly followed at all times. The High-Voltage Qualified Technician is responsible for adherence to the manufacturer's service instructions as well as current national legal regulations. If the hybrid/EV battery pack needs to be replaced contact the Technical Assistance Centre for further instructions prior to removal of the battery pack.

1. Ignition OFF, disconnect the harness connector at the Q65 hybrid/EV battery pack coolant control valve.
2. Ignition OFF and all vehicle systems OFF. It may take up to 2 minutes for all vehicle systems to power down. Test for less than 10 Ω between the low-reference circuit terminal 5 and earth.
   If greater than the specified range, test the low reference circuit for an open/high resistance. If the circuit tests normal, replace the K114B hybrid/EV powertrain control module 2. After the repair, with a scan tool, perform the Hybrid/EV Battery Pack Coolant Control Solenoid Valve Learn procedure.
3. Vehicle in Service Mode, test for 4.8-5.2 V between the 5 V reference circuit terminal 6 and earth.
   If less than the specified range, test the 5 V reference circuit for a short to ground or an open/high resistance. If the circuit is short-circuited to earth, refer to Testing the 5 V Reference Circuits for a Short-circuit to Earth. If the circuit tests normal, replace the K114B hybrid/EV powertrain control module 2. After the repair, with a scan tool, perform the Hybrid/EV Battery Pack Coolant Control Solenoid Valve Learn procedure.
   If greater than the specified range, test the 5 V reference circuit for a short to voltage. If the circuit is shorted to voltage, refer to Testing the 5 V Reference Circuits for a Short-Circuit to Voltage. If the circuit tests normal, replace the K114B hybrid/EV powertrain control module 2. After the repair, with a scan tool, perform the Hybrid/EV Battery Pack Coolant Control Solenoid Valve Learn procedure.
4. Vehicle in Service Mode, test for 4.8-5.2 V between the signal circuit terminal 4 and earth.
   If less than the specified range, test the signal circuit for a short to ground or an open/high resistance. If the circuit tests normal, replace the K114B hybrid/EV powertrain control module 2. After the repair, with a scan tool, perform the Hybrid/EV Battery Pack Coolant Control Solenoid Valve Learn procedure.
   If greater than the specified range, test the signal circuit for a short to voltage. If the circuit tests normal, replace the K114B hybrid/EV powertrain control module 2. After the repair, with a scan tool, perform the Hybrid/EV Battery Pack Coolant Control Solenoid Valve Learn procedure.
5. If all circuits test normal, test or replace the Q65 hybrid/EV battery pack coolant control valve.

Testing the 5 V Reference Circuits for a Short-circuit to Earth

1. Ignition OFF, disconnect the X1 harness connector at the K114B hybrid/EV powertrain control module 2.
2. Test for less than 100 Ω at the following terminals and earth;
   - Terminal 62
   - Terminal 63
   - Terminal 64

   If greater than the specified range, replace the K114B hybrid/EV powertrain control module 2.
3. Repair the short-circuit to earth on the appropriate 5 V reference circuit. After the repair, with a scan tool, perform the Hybrid/EV Battery Pack Coolant Control Solenoid Valve Learn procedure.

Testing the 5 V Reference Circuits for a Short-Circuit to Voltage

1. Ignition OFF, disconnect the X1 harness connector at the K114B hybrid/EV powertrain control module 2.
2. Vehicle in Service Mode, test for greater than 5.2 V at the following terminals and earth;
   - Terminal 62
   - Terminal 63
   - Terminal 64

   If less than the specified range, replace the K114B hybrid/EV powertrain control module 2.
3. Repair the short-circuit to voltage on the appropriate 5 V reference circuit. After the repair, with a scan tool, perform the Hybrid/EV Battery Pack Coolant Control Solenoid Valve Learn procedure.

Repair Instructions

Perform the Diagnostic Repair Verification after completing the repair.

- Drive Motor Battery Coolant Flow Control Valve Replacement
- Control Module References for hybrid/EV powertrain control module 2 replacement, programming and set-up

&#169© Copyright Chevrolet. All rights reserved

Hybrid/EV Electronics Coolant Pump Malfunction - DTC P0CE9 or P0CED

Diagnostic Instructions

- Perform the Diagnostic System Check - Vehicle prior to using this diagnostic procedure.
- Review Strategy Based Diagnosis for an overview of the diagnostic approach.
- Diagnostic Procedure Instructions provides an overview of each diagnostic category.

DTC Descriptors

DTC P0CE9: Hybrid/EV Electronics Coolant Pump Control Circuit

DTC P0CED: Hybrid/EV Electronics Coolant Pump Enable Circuit

Circuit/System Description

The hybrid/EV electronics coolant pump circulates coolant through the drive motor battery coolant radiator, hybrid/EV powertrain control module 1 and the battery charger to control the temperature of the hybrid/EV powertrain control module 1 and the battery charger. An enable signal from the hybrid/EV powertrain control module 2 to the hybrid/EV electronics coolant pump provides overall control of the pump. When this circuit is high, the pump can operate. The pump is controlled with a pulse-width modulated signal from the hybrid/EV powertrain control module 2 to the hybrid/EV electronics coolant pump. The higher the duty cycle the higher the pump speed. The hybrid/EV electronics coolant pump provides a hard-wired pulse-width modulated feedback signal to the hybrid/EV powertrain control module 2. During normal operation, this feedback signal provides pump speed information. The hybrid/EV electronics coolant pump has some self-diagnostic capability. If it determines there is an internal fault, it provides this information on this same feedback circuit instead of pump speed information.

Conditions for Running the DTC

P0CE9

- The 12 V battery voltage is greater than or equal to 9 V.
- The coolant pump enabled is commanded.

P0CED

- The 12 V battery voltage is greater than or equal to 9 V.
- The hybrid/EV powertrain control module 2 is awake and communicating.

Conditions for Setting the DTC

P0CE9

The hybrid/EV powertrain control module 2 has detected an open-circuit, short-circuit to voltage or short-circuit to earth on the coolant pump control circuit.

P0CED

The hybrid/EV powertrain control module 2 has detected an open-cicuit, short-circuit to voltage or short-circuit to earth on the coolant pump enable circuit.

Action Taken When the DTC Sets

DTCs P0CE9 and P0CED are a type B DTCs.

Conditions for Clearing the DTC

DTCs P0CE9 and P0CED are a type B DTCs.

Reference Information

Schematic Reference

Hybrid Cooling Schematics

Connector End View Reference

Component Connector End Views

Description and Operation

Hybrid Cooling System Description and Operation

Electrical Information Reference

- Circuit Testing

- Connector Repairs
- Testing for Intermittent Conditions and Poor Connections
- Wiring Repairs

DTC Type Reference

Powertrain Diagnostic Trouble Code (DTC) Type Definitions

Scan Tool Reference

Control Module References for scan tool information

Circuit/System Verification

Vehicle in Service Mode, propulsion system active, with a scan tool, verify that the Hybrid Electronics Coolant Pump Command is between 20%-90% and Hybrid Electronics Coolant Pump Feedback is 50% +/-5%.

Circuit/System Testing

Danger: Any hybrid/EV battery pack replacement shall be performed by High-Voltage Qualified Technicians only. The replacement procedure can be found in the service instruction and must be strictly followed at all times. The High-Voltage Qualified Technician is responsible for adherence to the manufacturer's service instructions as well as current national legal regulations. If the hybrid/EV battery pack needs to be replaced contact the Technical Assistance Centre for further instructions prior to removal of the battery pack.

1. Verify that DTC P0C43, P0C44, P0C45, P0C47, or P1EC6 is not set.
   If DTC is set, refer to Diagnostic Trouble Code (DTC) List - Vehicle .
2. Ignition OFF, disconnect the harness connector at the G35 hybrid/EV electronics coolant pump.
3. Ignition OFF and all vehicle systems OFF. It may take up to 2 minutes for all vehicle systems to power down. Test for less than 5 Ω between the ground circuit terminal 4 and ground.
   If greater than the specified range, test the ground circuit for an open/high resistance.
4. Connect a test lamp between the B+ circuit terminal 5 and the earth circuit terminal 4.
5. Vehicle in Service Mode, verify that a test lamp illuminates between the B+ circuit terminal 5 and earth circuit terminal 4.
   If the test lamp does not illuminate, test the B+ circuit for a short to ground or an open/high resistance. If the circuit tests normal and the B+ circuit fuse is open, test or replace the G35 hybrid/EV electronics coolant pump.
6. Connect a test lamp between the enable circuit terminal 1 and the earth circuit terminal 4.
7. Command the Hybrid Battery Pack Coolant Pump Command OFF (10%) and ON (90%) with a scan tool. The test lamp should turn OFF and ON when changing between the commanded states.
   If the test lamp is always illuminated at 10%, test the pump enable circuit for a short-circuit to voltage. If the circuit tests normal, replace the K114B hybrid/EV powertrain control module 2.
   If the test lamp does not illuminate at 90%, test the pump enable circuit for a short-circuit to earth or an open-circuit/high resistance. If the circuit tests normal, replace

the K114B hybrid/EV powertrain control module 2.

8. Connect a test lamp between the control circuit terminal3 and the B+ circuit terminal 5.
9. Command the Hybrid Battery Pack Coolant Pump Command ON between 20% and 90% with a scan tool. Verify that a test lamp changes illumination between bright (20%) and dim (90%) between the control circuit terminal 3 and the B+ circuit terminal 5.

   If the test lamp is always dim or does not illuminate, test the control circuit for a short-circuit to voltage or an open-circuit/high resistance. If the circuit tests normal, replace the K114B hybrid/EV powertrain control module 2.

   If the test lamp is always bright, test the control circuit for a short-circuit to earth. If the circuit tests normal, replace the K114B hybrid/EV powertrain control module 2.
10. Verify the scan tool Hybrid/EV Electronics Coolant Pump Feedback parameter is less than 10%.

    If greater than the specified range, test the feedback circuit terminal 2 for a short-circuit to earth. If the circuit tests normal, replace the K114B hybrid/EV powertrain control module 2.
11. Install a 3 A fused jumper wire between the feedback circuit terminal 2 and the earth circuit terminal 4. Verify that the scan tool, Hybrid/EV Electronics Coolant Pump Feedback parameter is greater than 90%.

    If less that the specified range, test the feedback circuit for a short-circuit to voltage or an open-circuit/high resistance. If the circuit tests normal, replace the K114B hybrid/EV powertrain control module 2.
12. If all circuits test normal, replace the G35 hybrid/EV electronics coolant pump.

Repair Instructions

Perform the Diagnostic Repair Verification after completing the repair.

- Generator Control Module Coolant Pump Replacement
- Control Module References for hybrid/EV powertrain control module 2 replacement, programming and set-up

&#169© Copyright Chevrolet. All rights reserved

DTC P0CEF-P0CF1

Diagnostic Instructions

- Perform the Diagnostic System Check - Vehicle prior to using this diagnostic procedure.
- Review Strategy Based Diagnosis for an overview of the diagnostic approach.
- Diagnostic Procedure Instructions provides an overview of each diagnostic category.

DTC Descriptors

DTC P0CEF: Hybrid/EV Electronics Coolant Temperature Sensor Performance

DTC P0CF0: Hybrid/EV Electronics Coolant Temperature Sensor Circuit Low Voltage

DTC P0CF1: Hybrid/EV Electronics Coolant Temperature Sensor Circuit High Voltage

Circuit/System Description

The hybrid/EV electronics have a coolant temperature sensor. The hybrid/EV electronics coolant temperature sensor is located in the coolant radiator. The temperature sensor is a variable resistor that measures the temperature of the hybrid/EV electronics coolant. The hybrid/EV electronics coolant temperature sensor resistance changes with battery coolant temperature. The lower the temperature, the higher the resistance of the sensor. The higher the temperature, the lower the resistance of the sensor. The hybrid/EV powertrain control module 2 uses the hybrid/EV electronics coolant temperature sensor to determine the hybrid/EV electronics temperature to control the hybrid/EV electronics cooling operation.

Conditions for Running the DTC

P0CEF

- The 12 V battery voltage is greater than or equal to 9 V.
- Ignition is not in CRANK.
- No fault on power inverter max. temperature sensor.
- Hybrid/EV electronics coolant pump off soak time is greater than 6 hours OR hybrid/EV electronics coolant pump off soak time is greater than 6 hours and has been

enabled for less than 15 seconds.
- None of the following DTCs are set; P0606, P0CF1, P0CF0, P0CE9, P0CED, P0A2D, P0A2C, P0A2B, P0A2F, P0A31, P0A32, P0A33 or P0A35.
  OR
- The 12 V battery voltage is greater than or equal to 9 V.
- Ignition is in RUN.
- The propulsion system active.
- The hybrid/EV electronics coolant pump is enabled.
- The hybrid/EV electronics coolant pump speed (duty cycle) is between within 30% and 90%.
- None of the following DTCs are set; P0CF1, P0CF0, P0CE9, P0CED, P1ED6, P1ED7, P1ED8, P0A2D, P0A2C, P0A2B, P0A2F, P0A31, P0A32, P0A33 or P0A35.
  OR
- The 12 V battery voltage is greater than or equal to 9 V.
- Ignition is OFF.
- The hybrid/EV electronics coolant pump is enabled.
- The hybrid/EV electronics coolant pump speed (duty cycle) is between within 30% and 90%.
- The vehicle is in charge mode.
- None of the following DTCs are set; P0CF1, P0CF0, P0CE9, P0CED, P1ED7, P1ED6 or P1ED8.

P0CF0 and P0CF1

- The ignition is ON.
- The 12 V battery voltage is greater than or equal to 9 V.

Conditions for Setting the DTC

P0CEF

- The coolant temperature does not fall within 30°C (86°F) of the Drive Motor A Inverter Temperature or Drive Motor B Inverter Temperature (the higher of the two readings).
  OR
- The coolant temperature does not fall within 20°C (68°F) and the battery charger temperature is 10°C (50°F).
  OR
- The coolant temperature does not fall within 10°C (50°F) of the battery charger temperature.

P0CF0

The hybrid/EV electronics coolant temperature is greater than 87.5°C (189.5°F).

P0CF1

The hybrid/EV electronics temperature is less than -40°C (-40°F).

Action Taken When the DTC Sets

DTC P0CEF-P0CF1 are type B DTCs.

Conditions for Clearing the DTC

DTC P0CEF-P0CF1 are type B DTCs.

Diagnostic Aids

- Low or no coolant in the system may set a DTC P0CF0.
- An inoperative hybrid/EV electronics coolant pump may set a DTC P0CEF.

Reference Information

Schematic Reference

Hybrid Cooling Schematics

Connector End View Reference

Component Connector End Views

Description and Operation

Hybrid Cooling System Description and Operation

Electrical Information Reference

- Circuit Testing
- Connector Repairs
- Testing for Intermittent Conditions and Poor Connections
- Wiring Repairs

DTC Type Reference

Powertrain Diagnostic Trouble Code (DTC) Type Definitions

Scan Tool Reference

Control Module References for scan tool information

Circuit/System Verification

Vehicle in Service Mode, observe the scan tool hybrid/EV powertrain control module 2 Hybrid Electronics Coolant Temperature parameter. The readings should be between -39 and +85°C (-38.2 and +185°F).

Circuit/System Testing

Danger: Any hybrid/EV battery pack replacement shall be performed by High-Voltage Qualified Technicians only. The replacement procedure can be found in the service instruction and must be strictly followed at all times. The High-Voltage Qualified Technician is responsible for adherence to the manufacturer's service instructions as well as current national legal regulations. If the hybrid/EV battery pack needs to be replaced contact the Technical Assistance Centre for further instructions prior to removal of the battery pack.

1. Vehicle in Service Mode, verify that DTC P0CE9 or P0CED is not set.
   If DTC is set, refer to Diagnostic Trouble Code (DTC) List - Vehicle .
2. Ignition OFF, disconnect the harness connector at the B202 hybrid/EV electronics coolant temperature sensor.
3. Ignition OFF and all vehicle systems OFF. It may take up to 2 minutes for all vehicle systems to power down. Test for less than 10 Ω between the low reference circuit terminal 2 and ground.
   If greater than the specified range, test the low reference circuit for an open/high resistance. If the circuit tests normal, replace the K114B hybrid/EV powertrain control module 2.
4. Vehicle in Service Mode, verify the scan tool Hybrid Electronics Coolant Temperature is less than -35 °C (-38.2 °F).
   If greater than the specified range, test the signal circuit terminal 1 for a short to ground. If the circuit tests normal, replace the K114B hybrid/EV powertrain control module 2.
5. Install a 3 A fused jumper wire between the signal circuit terminal 1 and the low-reference circuit terminal 2. Verify that the scan tool Hybrid Electronics Coolant Temperature parameter is greater than 127°C (260.6°F).
   If less than the specified range, test the signal circuit for a short to voltage or an open/high resistance. If the circuit tests normal, replace the K114B hybrid/EV powertrain control module 2.
6. If all circuits test normal, test or replace the B202 hybrid/EV electronics coolant temperature sensor.

Component Testing

1. Ignition OFF, disconnect the harness connector at the B202 hybrid/EV electronics coolant temperature sensor.
2. Test for 54-75.5k Ω at approximately 21.11°C (70°F) between the signal terminal and the low-reference terminal.
   If not within the specified range, replace the B202 hybrid/EV electronics coolant temperature sensor.

Repair Instructions

Perform the Diagnostic Repair Verification after completing the repair.

- Coolant Temperature Sensor Replacement
- Control Module References for hybrid/EV powertrain control module 2 replacement, programming and set-up

&#169© Copyright Chevrolet. All rights reserved

Cooling Fan Malfunction - DTC P148A-P148C

Diagnostic Instructions

- Perform the Diagnostic System Check - Vehicle prior to using this diagnostic procedure.
- Review Strategy Based Diagnosis for an overview of the diagnostic approach.
- Diagnostic Procedure Instructions provides an overview of each diagnostic category.

DTC Descriptors

DTC P148A: Cooling Fan Signal Circuit Performance

DTC P148B: Cooling Fan Signal Circuit Low Voltage

DTC P148C: Cooling Fan Signal Circuit High Voltage

Circuit/System Description

The hybrid/EV powertrain control module 2 controls the radiator cooling fans. The cooling fans are controlled with a pulse width modulated (PWM) signal. The hybrid/EV powertrain control module 2 diagnoses any faults with the hardwire circuit to the engine control module. The engine control module sends a fan request PWM signal to the hybrid/EV powertrain control module 2 through a hardwire circuit. The hybrid/EV powertrain control module 2 operates in a pass-through mode for the engine control module fan request. The higher the duty cycle the higher the cooling fan speed.

Conditions for Running the DTC

P148A

- The 12 V battery voltage is greater than or equal to 9 V.
- The propulsion system is active.
- The cooling fans are enabled for more than 10 seconds.
- None of the following DTCs are set: P148B or P148C.

OR

- The 12 V battery voltage is greater than or equal to 9 V.
- The propulsion system is inactive.
- The energy storage system thermal condition request is ActiveCool.
- The cooling fans are enabled for more than 10 seconds.
- None of the following DTCs are set: P148B or P148C.

P148B

The 12 V battery voltage is greater than or equal to 9 V.

P148C

- The 12 V battery voltage is greater than or equal to 9 V.
- The propulsion system is active.
- The cooling fans are enabled for more than 10 seconds.
- OR
- The 12 V battery voltage is greater than or equal to 9 V.
- The propulsion system is inactive.
- The energy storage system thermal condition request is ActiveCool.
- The cooling fans are enabled for more than 10 seconds.

Conditions for Setting the DTC

P148A

The PWM fan duty cycle request from engine control module (Hardwire) is not within 30% of the requested engine cooling fan speed sent to the hybrid/EV powertrain control module 2 via serial data.

P148B

The hybrid/EV powertrain control module 2 has detected a duty cycle of greater than 97% from the engine control module.

P148C

The hybrid/EV powertrain control module 2 has detected a duty cycle of less than 3% from the engine control module.

Action Taken When the DTC Sets

DTCs P148A, P148B and P148C are type B DTCs.

Conditions for Clearing the DTC

DTCs P148A, P148B and P148C are type B DTCs.

Reference Information

Schematic Reference

Engine Cooling Schematics

Connector End View Reference

Component Connector End Views

Description and Operation

Hybrid Cooling System Description and Operation

Electrical Information Reference

- Circuit Testing
- Connector Repairs
- Testing for Intermittent Conditions and Poor Connections
- Wiring Repairs

DTC Type Reference

Powertrain Diagnostic Trouble Code (DTC) Type Definitions

Scan Tool Reference

Control Module References for scan tool information

Circuit/System Verification

Vehicle in Service Mode, with a scan tool, command the Cooling Fan Motor Command ON. Verify that the Cooling Fan Motor Command is greater than 0% and the cooling fans operate.

Circuit/System Testing

Danger: Any hybrid/EV battery pack replacement shall be performed by High-Voltage Qualified Technicians only. The replacement procedure can be found in the service instruction and must be strictly followed at all times. The High-Voltage Qualified Technician is responsible for adherence to the manufacturer's service instructions as well as current national legal regulations. If the hybrid/EV battery pack needs to be replaced contact the Technical Assistance Centre for further instructions prior to removal of the battery pack.

1. Ignition OFF, disconnect the X1 harness connector at the K20 engine control module.
2. Vehicle in Service Mode, test for 4.8-5.2 V between the signal circuit terminal 41 and earth.
   If less than the specified range, test the signal circuit for a short to ground or an open/high resistance. If the circuit tests normal, replace the K114B hybrid/EV powertrain control module 2.
   If greater than the specified range, test the signal circuit for a short to voltage. If the circuit tests normal, replace the K114B hybrid/EV powertrain control module 2.
3. If all circuits test normal, replace the K20 engine control module.

Repair Instructions

Perform the Diagnostic Repair Verification after completing the repair.

Control Module References for engine control module or hybrid/EV powertrain control module 2 replacement, programming and set-up

&#169© Copyright Chevrolet. All rights reserved

14 Volt Power Module Cooling Fan Malfunction - DTC P1EA6 or P1EA7

Diagnostic Instructions

- Perform the Diagnostic System Check - Vehicle prior to using this diagnostic procedure.
- Review Strategy Based Diagnosis for an overview of the diagnostic approach.
- Diagnostic Procedure Instructions provides an overview of each diagnostic category.

DTC Descriptors

DTC P1EA6: 14 Volt Power Module Cooling Fan Control Circuit

DTC P1EA7: 14 Volt Power Module Cooling Fan Enable Circuit

Circuit/System Description

The 14 V power module cooling fan blows air through the 14 V power module to control the temperature of the 14 V power module. The fan is controlled with a pulse-width modulated signal sent from the hybrid/EV powertrain control module 2 to the 14 V power module fan. The longer the duty cycle on the signal the higher the fan speed. Maximum fan speed is 3,900 RPM. An enable signal from the hybrid/EV powertrain control module 2 to the 14 V power module fan provides overall control of the fan. When this circuit is high, the fan can operate. The 14 V power module fan provides a hard-wired pulse-width modulated feedback signal to the hybrid/EV powertrain control module 2. During normal operation, this feedback signal provides fan speed information. The 14 V power module fan has some self-diagnostic capability. If it determines there is an internal fault it provides this information on this same feedback circuit instead of speed information.

Conditions for Running the DTC

P1EA6

- The 12 V battery voltage is greater than or equal to 9 V.
- The 14 V power module fan is enabled

P1EA7

The 12 V battery voltage is greater than or equal to 9 V.

Conditions for Setting the DTC

P1EA6

The hybrid/EV powertrain control module 2 has detected an open, short-circuit to voltage or short-circuit to earth on the 14 V power module cooling fan control circuit

P1EA7

The hybrid/EV powertrain control module 2 has detected an open, short-circuit to voltage or short-circuit to earth on the 14 volt power module cooling fan enable circuit.

Action Taken When the DTC Sets

DTCs P1EA6 and P1EA7 are type B DTCs.

Conditions for Clearing the DTC

DTCs P1EA6 and P1EA7 are type B DTCs.

Reference Information

Schematic Reference

Hybrid Cooling Schematics

Connector End View Reference

Component Connector End Views

Description and Operation

Hybrid Cooling System Description and Operation

Electrical Information Reference

- Circuit Testing
- Connector Repairs
- Testing for Intermittent Conditions and Poor Connections

- Wiring Repairs

DTC Type Reference

Powertrain Diagnostic Trouble Code (DTC) Type Definitions

Scan Tool Reference

Control Module References for scan tool information

Circuit/System Verification

Vehicle in Service Mode, with a scan tool, command the 14 V Power Module Fan Command between 10%-90%-10%. Verify that the 14 V Power Module Fan Speed increases and decreases with the command.

Circuit/System Testing

Danger: Any hybrid/EV battery pack replacement shall be performed by High-Voltage Qualified Technicians only. The replacement procedure can be found in the service instruction and must be strictly followed at all times. The High-Voltage Qualified Technician is responsible for adherence to the manufacturer's service instructions as well as current national legal regulations. If the hybrid/EV battery pack needs to be replaced contact the Technical Assistance Centre for further instructions prior to removal of the battery pack.

1. Ignition OFF, disconnect the harness connector at the G38 14 V power module cooling fan.
2. Ignition OFF and all vehicle systems OFF. It may take up to 2 minutes for all vehicle systems to power down. Test for less than 10 Ω between the ground circuit terminal 1 and ground.
   If greater than the specified range, test the ground circuit for an open/high resistance.
3. Connect a test lamp between the B+ circuit terminal 5 and earth circuit terminal 1.
4. Vehicle in Service Mode, verify that a test lamp illuminates between the B+ circuit terminal 5 and earth circuit terminal 1.
   If the test lamp does not illuminate, test the B+ circuit for a short to ground or an open/high resistance. If the circuit tests normal and the B+ circuit fuse is open, replace the G38 14 V power cooling module fan.
5. Connect a test lamp between the enable circuit terminal 4 and earth circuit terminal 1.
6. Command the 14 V Power Module Fan Command OFF (10%) and ON (90%) with a scan tool. Verify the test lamp turns OFF and ON when changing between the commanded states.
   If the test lamp is always illuminated at 10%, test the pump enable circuit for a short-circuit to voltage. If the circuit tests normal, replace the K114B hybrid/EV powertrain control module 2.
   If the test lamp does not illuminate at 90%, test the pump enable circuit for a short-circuit to earth or an open-circuit/high resistance. If the circuit tests normal, replace the K114B hybrid/EV powertrain control module 2.
7. Connect a test lamp between the control circuit terminal3 and the B+ circuit terminal 5.
8. Command the 14 V Power Module Fan ON between 10% and 90% with a scan tool. Verify that a test lamp changes illumination between bright (10%) and dim (90%) between the control circuit terminal 3 and the B+ circuit terminal 5.

If the test lamp is always dim or does not illuminate, test the control circuit for a short-circuit to voltage or an open-circuit/high resistance. If the circuit tests normal, replace the K114B hybrid/EV powertrain control module 2.

If the test lamp is always bright, test the control circuit for a short-circuit to earth. If the circuit tests normal, replace the K114B hybrid/EV powertrain control module 2.

9. Verify the scan tool 14 V Power Module Fan Feedback parameter is less than 10%.
   If greater than the specified range, test the feedback circuit terminal 2 for a short-circuit to earth. If the circuit tests normal, replace the K114B hybrid/EV powertrain control module 2.
10. Install a 3 A fused jumper wire between the feedback circuit terminal 2 and the B+ circuit terminal 5. Verify that the scan tool, 14 V Power Module Fan Feedback parameter is greater than 90%.
    If less that the specified range, test the feedback circuit for a short-circuit to voltage or an open-circuit/high resistance. If the circuit tests normal, replace the K114B hybrid/EV powertrain control module 2.
11. If all circuits test normal, replace the G38 14 V power module cooling fan.

Repair Instructions

Perform the Diagnostic Repair Verification after completing the repair.

- Accessory DC Power Control Module Cooling Blower Replacement
- Control Module References for hybrid/EV powertrain control module 2 replacement, programming and set-up

&#169© Copyright Chevrolet. All rights reserved

Hybrid/EV Battery Pack Coolant Heater Malfunction - DTC P1EC6

Diagnostic Instructions

- Perform the Diagnostic System Check - Vehicle prior to using this diagnostic procedure.
- Review Strategy Based Diagnosis for an overview of the diagnostic approach.
- Diagnostic Procedure Instructions provides an overview of each diagnostic category.

DTC Descriptor

DTC P1EC6: Hybrid/EV Battery Pack Heater Performance

Circuit/System Description

The hybrid/EV battery contains 5 high-voltage contactors and 2 transistors. The high-voltage contactors allow the high-voltage DC batteries to be connected to the vehicle or safely contain the high-voltage DC within the hybrid/EV battery assembly. The 5 high-voltage contactors are a main positive high-voltage contactor, main negative high-voltage contactor, charge positive high-voltage contactor, charge negative high-voltage contactor and multi-function high-voltage contactor. The 2 transistors are the precharge transistor and heater transistor. These contactors/transistors close and open in sequence and are controlled by the hybrid/EV powertrain control module 2. The hybrid/EV powertrain control module 2 supplies voltage to the control circuit for the high-voltage contactors/transistors. Earth is provided through the case earth.

The hybrid/EV battery pack coolant heater is mounted to the coolant inlet on the back side of the hybrid/EV battery contactor assembly. The hybrid/EV battery pack coolant heater uses a 360 V power source.

After the ignition is turned ON, the hybrid/EV battery pack coolant heater is commanded ON. The hybrid/EV powertrain control module 2 monitors the temperature change at the hybrid/EV battery pack coolant temperature sensor 1 to determine if the hybrid/EV battery pack coolant heater is functioning properly.

Conditions for Running the DTC

- The 12 V battery voltage is greater than or equal to 9 V.
- The vehicle is not connected to an active AC source.
- The hybrid/EV battery pack coolant temperature sensor 1 is less than 45°C (113°F).
- The difference between the hybrid/EV battery pack coolant temperature sensor 1 and the hybrid/EV battery average cell temperature is less the 25°C (77°F)
- Runs once per ignition cycle when propulsion system goes active.

- None of the following DTCs are set; P1EC3, P1EC4, P1EC5, P0C44, P0C45, P1F18, P0C47, or U0111.

Conditions for Setting the DTC

The hybrid/EV powertrain control module 2 did not see the battery pack coolant temperature sensor 1 rise fast enough during the test period of one minute. The required increase in temperature is approximately 1°C (1.8°F) change for every 2 seconds.

Action Taken When the DTC Sets

- DTC P1EC6 is a type B DTC.
- The hybrid/EV battery pack coolant heater will be disabled.

Conditions for Clearing the DTC

DTC P1EC6 is a type B DTC.

Diagnostic Aids

P1EC6 will prevent battery heating and the vehicle will be unable to start in cold weather with battery temperatures below -25°C (-13°F).

Reference Information

Schematic Reference

Hybrid Cooling Schematics

Connector End View Reference

Component Connector End Views

Description and Operation

Hybrid Cooling System Description and Operation

Electrical Information Reference

- Circuit Testing
- Connector Repairs
- Testing for Intermittent Conditions and Poor Connections

- Wiring Repairs

DTC Type Reference

Powertrain Diagnostic Trouble Code (DTC) Type Definitions

Scan Tool Reference

Control Module References for scan tool information

Special Tools

EL-48900 HEV Safety Kit

For equivalent regional tools, refer to Special Tools .

Circuit/System Verification

Danger: High voltage enabling and disabling shall be only performed by High Voltage Qualified Technicians. The procedures for high-voltage enabling/disabling can be found in the service instructions and must be strictly followed at all times. The usage of the Protocol High Voltage Disabling/Enabling is mandatory. The High-Voltage Qualified Technician is responsible for the adherence to the manufacturer's service instructions as well as current national legal regulations.

Failure to follow the procedures exactly as written may result in serious injury or death.

Questions regarding training can be answered by your national training centre.

Danger: Any hybrid/EV battery pack replacement shall be performed by High-Voltage Qualified Technicians only. The replacement procedure can be found in the service instruction and must be strictly followed at all times. The High-Voltage Qualified Technician is responsible for adherence to the manufacturer's service instructions as well as current national legal regulations. If the hybrid/EV battery pack needs to be replaced contact the Technical Assistance Centre for further instructions prior to removal of the battery pack.

1. Ignition OFF, disable the high voltage at the A4 hybrid/EV battery pack. Refer to High Voltage Disabling .
2. If the DTC is set, replace the A4 hybrid/EV battery pack.

Repair Instructions

Perform the Diagnostic Repair Verification after completing the repair.

- Drive Motor Battery Replacement and Shipping Preparation
- Control Module References for battery energy control module replacement and hybrid battery interface control modules 1-4, programming and set-up for the hybrid/EV battery pack replacement.

&#169© Copyright Chevrolet. All rights reserved

Hybrid Cooling System Pressure Cap Testing

Special Tools

- *GE-46143* Radiator Cap and Surge Tank Test Adapter
- *EN-24460-A* Cooling System Pressure Tester

For equivalent regional tools, Refer toSpecial Tools

Pressure Cap Testing

Warning: To avoid being burned, do not remove the radiator cap or surge tank cap while the engine is hot. The cooling system will release scalding fluid and steam under pressure if radiator cap or surge tank cap is removed while the engine and radiator are still hot.

1. Remove the pressure cap.
2. Wash the pressure cap sealing surface with water.

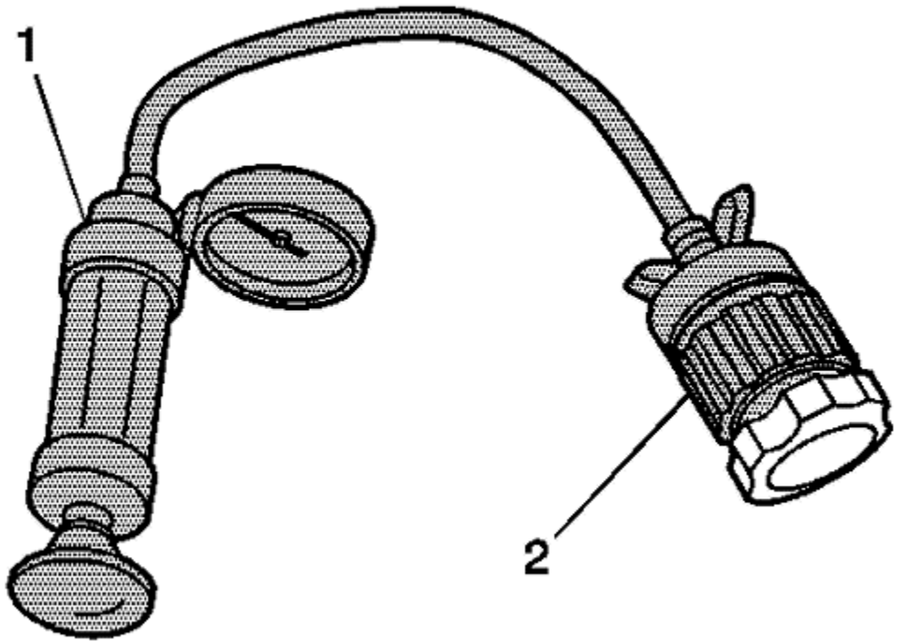

Note: Lubricate *GE-46143* Radiator Cap and Surge Tank Test Adapter and pressure cap O-rings with coolant and press cap to seat O-ring on *GE-46143* Radiator Cap and Surge Tank Test Adapter before turning to engage threads.

3. Use the *EN-24460-A* Cooling System Pressure Tester (1) with *GE-46143* Radiator Cap and Surge Tank Test Adapter (2) in order to test the pressure cap.
4. Test the pressure cap for the following conditions:
   - Pressure release when the *EN-24460-A* Cooling System Pressure Tester exceeds the pressure rating of the pressure cap.
   - Maintain the rated pressure for at least 10 seconds.

   Note the rate of pressure loss.
5. Replace the pressure cap under the following conditions:
   - The pressure cap does not release pressure which exceeds the rated pressure of the cap.
   - The pressure cap does not hold the rated pressure.

&#169© Copyright Chevrolet. All rights reserved

Hybrid Cooling System Leak Test

Special Tools

- *EN-24460-A* Cooling System Pressure Tester
- *GE-46143* Radiator Cap and Surge Tank Test Adapter

For equivalent regional tools, Refer toSpecial Tools

Warning: Under pressure, the temperature of the solution in the radiator can be considerably higher, without boiling. Removing the radiator cap while the engine is hot (pressure is high), will cause the solution to boil instantaneously, with explosive force. The solution will spew out over the engine, wings, and the person removing the cap. Serious bodily injury may result. Flammable antifreeze, such as alcohol, is not recommended for use at any time. Flammable antifreeze could cause a serious fire.

Warning: In order to help avoid being burned, do not remove the radiator cap while the engine and the radiator are hot. Scalding fluid and steam can be blown out under pressure if the cap is removed too soon.

1. Remove the pressure cap.
2. Test the operation of the pressure cap. Refer to Hybrid Cooling System Pressure Cap Testing .
3. Wash the pressure cap mating surface with water.

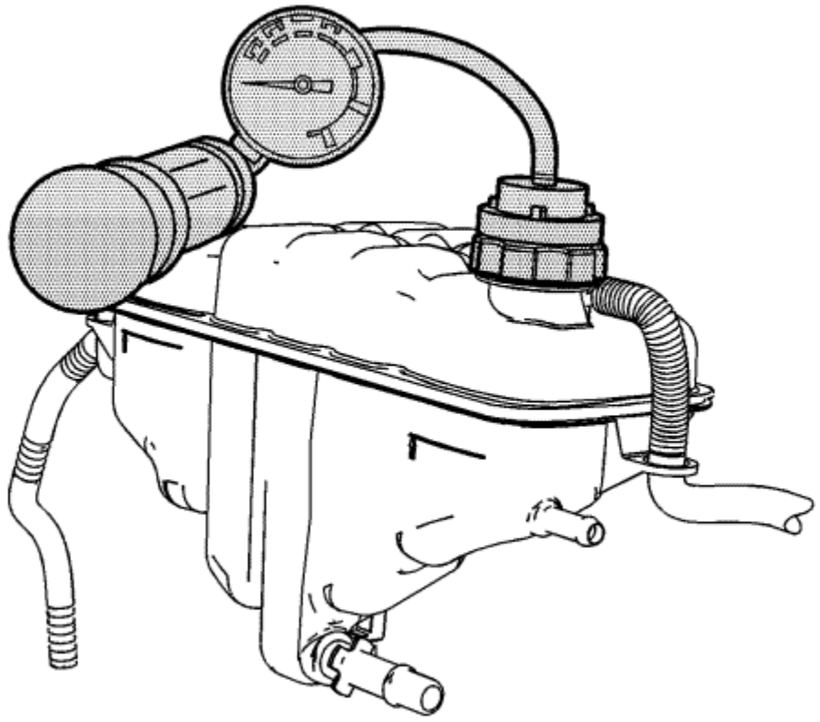

4. Use the *EN-24460-A* Cooling System Pressure Tester with the *GE-46143* Radiator Cap and Surge Tank Test Adapter in order to apply pressure to the cooling system.

   Do not exceed the pressure cap rating.

5. The cooling system should hold the rated pressure for at least 2 minutes.

   Observe the gauge for any pressure loss.

6. Repair any leaks as required.

Note: Do not use stop leak or any other chemicals. Only use premix Dexcool (50/50 mixture of Dexcool and deionised)

&#169© Copyright Chevrolet. All rights reserved

Hybrid Battery Pack Coolant Passage Leak Test

Special Tools

- *EN-24460-A* Cooling System Pressure Tester
- *GE-47716* Vac-N-Fill Coolant Refill Tool
- *GE-50385* Battery Pack Coolant Passage Pressure Test Adapter
- *GE-50389* Coolant Pressure Test Quick Connecter

For equivalent regional tools, Refer toSpecial Tools

Warning: Under pressure, the temperature of the solution in the radiator can be considerably higher, without boiling. Removing the radiator cap while the engine is hot (pressure is high), will cause the solution to boil instantaneously, with explosive force. The solution will spew out over the engine, wings, and the person removing the cap. Serious bodily injury may result. Flammable antifreeze, such as alcohol, is not recommended for use at any time. Flammable antifreeze could cause a serious fire.

Warning: In order to help avoid being burned, do not remove the radiator cap while the engine and the radiator are hot. Scalding fluid and steam can be blown out under pressure if the cap is removed too soon.

1. Install Cooling System Pressure Tester Cap Adapter to *EN-24460-A* Cooling System Pressure Tester .
2. Install *GE-47716-8* Vac-N-Fill Cap to Cooling System Pressure Tester Cap Adapter.
3. Install *GE-50389* Coolant Pressure Test Quick Connecter to *GE-47716-8* Vac-N-Fill Cap .
4. Install *GE-50385-1* Coolant Pressure Tester Adapter to *GE-50389* Quick Connecter .
5. Install *GE-50385-1* Coolant Pressure Tester Adapter to battery pack inlet connector.
6. Install *GE-50385-2* Coolant Pressure Tester Adapter to battery pack outlet connector.
7. Apply pressure to the battery pack coolant passages.

   Do not exceed the pressure cap rating.

8. The cooling passages should hold the rated pressure for at least 2 minutes.

   Observe the gauge for any pressure loss.

9. Repair any leaks as required.

&#169© Copyright Chevrolet. All rights reserved

Drive Motor Battery Cooling System Draining and Filling

Special Tools

- *GE-26568* Coolant and Battery Tester
- *GE-47716* Vac-N-Fill Coolant Refill Tool
- *GE-46143* Cooling System Adapter

For equivalent regional tools, Refer toSpecial Tools

Draining Procedure

Warning: To avoid being burned, do not remove the radiator cap or surge tank cap while the engine is hot. The cooling system will release scalding fluid and steam under pressure if radiator cap or surge tank cap is removed while the engine and radiator are still hot.

1. Remove the battery radiator inlet hose from the quick connect at the right frame rail. Refer to Drive Motor Battery Radiator Inlet Hose Replacement
2. To drain the battery coolant, remove the battery hose quick connect at the battery. Refer to Drive Motor Battery Coolant Cooler Inlet Hose Assembly Replacement
3. Inspect the coolant.
4. Follow the appropriate procedure based on the condition of the coolant.
   - Normal in appearance--Follow the filling procedure.
   - Discoloured--Follow the flush procedure. Refer to Flushing .

Vac-N-Fill Procedure

Warning: To avoid being burned, do not remove the radiator cap or surge tank cap while the engine is hot. The cooling system will release scalding fluid and steam under pressure if radiator cap or surge tank cap is removed while the engine and radiator are still hot.

Note: To prevent boiling of the coolant/water mixture in the vehicle's cooling system, do not apply vacuum to a cooling system above 49°C (120°F). The tool will not operate properly when the coolant is boiling.

1. Install *GE-46143* Cooling System Adapter
2. Attach the Van-N-Fill cap to *GE-46143* Cooling System Adapter .

3. Attach the vacuum gauge assembly to the Vac-N-Fill cap.

4. Attach the filling hose to the barb fitting on the vacuum gauge assembly.

   Ensure that the valve is closed.

   Note: Use a Pre-mixed Dexcool® (50/50 mixture of Dexcool® and deionised water). Always use more coolant than necessary. This will eliminate air from being drawn into the cooling system.

5. Pour the coolant mixture into the graduated reservoir.
6. Place the fill hose in the graduated reservoir.

   Note: Prior to installing the vacuum tank onto the graduated reservoir, ensure that the drain valve located on the bottom of the tank is closed.

7. Install the vacuum tank on the graduated reservoir with the fill hose routed through the cut-out area in the vacuum tank.

8. Attach the venture assembly to the vacuum tank.

9. Attach a shop air hose to the venture assembly.

   Ensure the valve on the venture assembly is closed.

10. Attach the vacuum hose to the vacuum gauge assembly and the vacuum tank.

11. Open the valve on the venture assembly. The vacuum gauge will begin to rise and a hissing noise will be present.

12. Continue to draw a vacuum until the needle stops rising. This should be 610-660 mm Hg (24-26 in Hg).

Cooling hoses may start to collapse. This is normal due to vacuum draw.

13. To aid in the fill process, position the graduated reservoir above the coolant fill port.

14. Slowly open the valve on the vacuum gauge assembly. When the coolant reaches the top of the fill hose, close the valve. This will eliminate air from the fill hose.
15. Close the valve on the venture assembly.
16. If there is a suspected leak in the cooling system, allow the system to stabilise under vacuum and monitor for vacuum loss.

    If vacuum loss is observed, refer to Loss of Coolant .

17. Open the valve on the vacuum gauge assembly. The vacuum gauge will drop as coolant is drawn into the system.

18. Once the vacuum gauge reaches zero, close the valve on the vacuum gauge assembly and repeat steps 12-18.
19. Detach the Vac-N-Fill cap from the *GE-46143* Cooling System Adapter .
20. Remove *GE-46143* Cooling System Adapter from the surge tank filler neck.
21. Add coolant to the system as necessary.
22. Inspect the concentration of the coolant mixture using *GE-26568* Coolant and Battery Tester.

    Note: After filling the cooling system, the extraction hose can be used to remove excess coolant and achieve the proper coolant level.

23. Detach the vacuum hose form the vacuum gauge assembly.

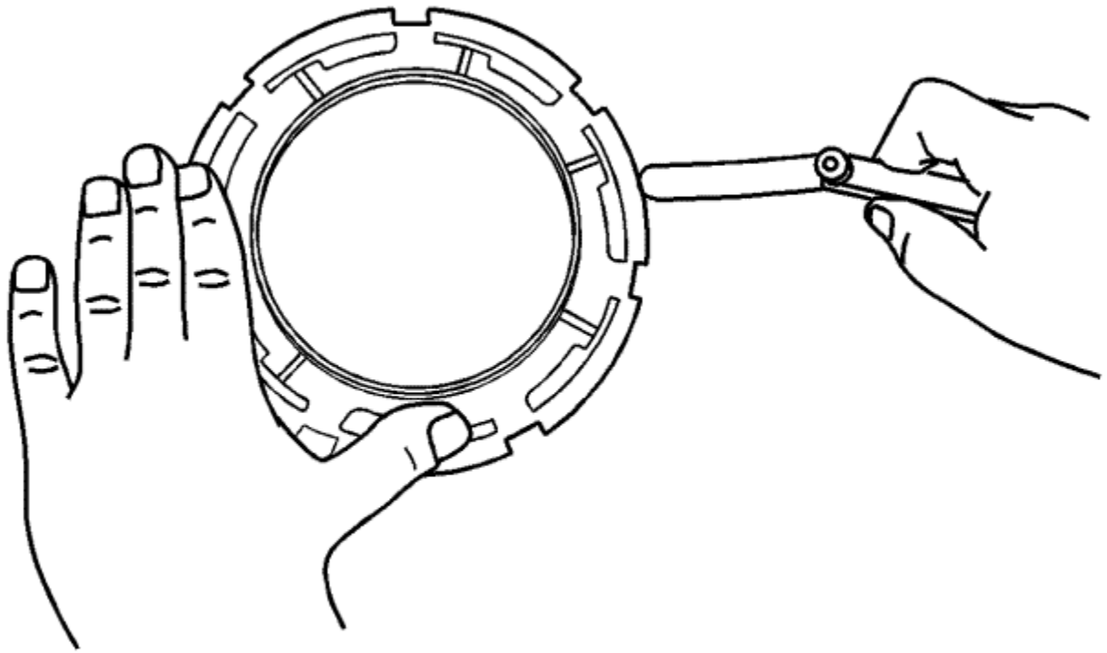

24. Attach the extraction hose to the vacuum hose.

25. Open the valve on the venture assembly to start a vacuum draw.

26. Use the extraction hose to draw out coolant to the proper level.

27. The vacuum tank has a drain valve on the bottom of the tank. Open the valve to drain coolant from the vacuum tank into a suitable container for disposal.

&#169© Copyright Chevrolet. All rights reserved

Drive Motor Generator Power Inverter Module Cooling System Draining and Filling

Special Tools

- *GE-26568* Coolant and Battery Tester
- *GE-47716* Vac-N-Fill Coolant Refill Tool
- *GE-46143* Cooling System Adapter

For equivalent regional tools, Refer toSpecial Tools

Draining Procedure

Warning: To avoid being burned, do not remove the radiator cap or surge tank cap while the engine is hot. The cooling system will release scalding fluid and steam under pressure if radiator cap or surge tank cap is removed while the engine and radiator are still hot.

1. Remove the drive motor generator control module coolant pump hose from the pump. Refer to Drive Motor Generator Control Module Coolant Pump Hose Replacement
2. Inspect the coolant.
3. Follow the appropriate procedure based on the condition of the coolant.
   - Normal in appearance--Follow the filling procedure.
   - Discoloured--Follow the flush procedure. Refer to Flushing .

Vac-N-Fill Procedure

Warning: To avoid being burned, do not remove the radiator cap or surge tank cap while the engine is hot. The cooling system will release scalding fluid and steam under pressure if radiator cap or surge tank cap is removed while the engine and radiator are still hot.

Note: To prevent boiling of the coolant/water mixture in the vehicle's cooling system, do not apply vacuum to a cooling system above 49°C (120°F). The tool will not operate properly when the coolant is boiling.

1. Install *GE-46143* Cooling System Adapter
2. Attach the Van-N-Fill cap to *GE-46143* Cooling System Adapter .

3. Attach the vacuum gauge assembly to the Vac-N-Fill cap.

4. Attach the filling hose to the barb fitting on the vacuum gauge assembly.

   Ensure that the valve is closed.

   Note: Use a Pre-mixed Dexcool® (50/50 mixture of Dexcool® and deionised water). Always use more coolant than necessary. This will eliminate air from being drawn into the cooling system.

5. Pour the coolant mixture into the graduated reservoir.
6. Place the fill hose in the graduated reservoir.

   Note: Prior to installing the vacuum tank onto the graduated reservoir, ensure that the drain valve located on the bottom of the tank is closed.

7. Install the vacuum tank on the graduated reservoir with the fill hose routed through the cut-out area in the vacuum tank.

8. Attach the venture assembly to the vacuum tank.

9. Attach a shop air hose to the venture assembly.

   Ensure the valve on the venture assembly is closed.

10. Attach the vacuum hose to the vacuum gauge assembly and the vacuum tank.

11. Open the valve on the venture assembly. The vacuum gauge will begin to rise and a hissing noise will be present.

12. Continue to draw a vacuum until the needle stops rising. This should be 610-660 mm Hg (24-26 in Hg).

    Cooling hoses may start to collapse. This is normal due to vacuum draw.

13. To aid in the fill process, position the graduated reservoir above the coolant fill port.

14. Slowly open the valve on the vacuum gauge assembly. When the coolant reaches the top of the fill hose, close the valve. This will eliminate air from the fill hose.
15. Close the valve on the venture assembly.
16. If there is a suspected leak in the cooling system, allow the system to stabilise under vacuum and monitor for vacuum loss.

    If vacuum loss is observed, refer to Loss of Coolant .

17. Open the valve on the vacuum gauge assembly. The vacuum gauge will drop as coolant is drawn into the system.

18. Once the vacuum gauge reaches zero, close the valve on the vacuum gauge assembly and repeat steps 12-18.
19. Detach the Vac-N-Fill cap from the *GE-46143* Cooling System Adapter .
20. Remove *GE-46143* Cooling System Adapter from the surge tank filler neck.
21. Add coolant to the system as necessary.
22. Inspect the concentration of the coolant mixture using *GE-26568* Coolant and Battery Tester.

    Note: After filling the cooling system, the extraction hose can be used to remove excess coolant and achieve the proper coolant level.

23. Detach the vacuum hose form the vacuum gauge assembly.

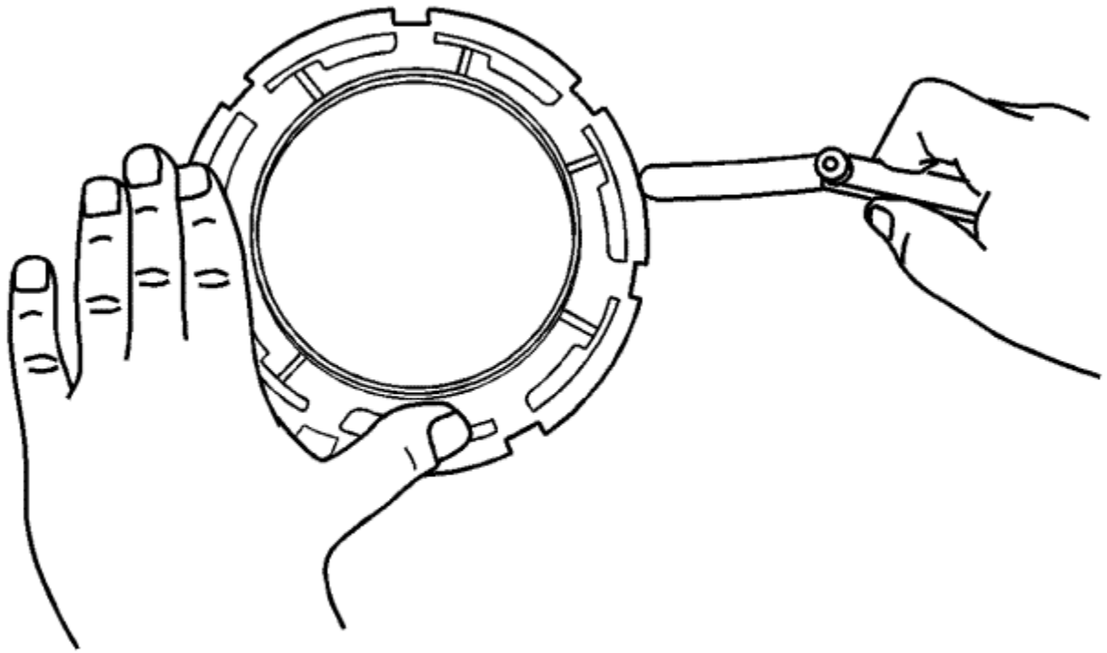

24. Attach the extraction hose to the vacuum hose.

25. Open the valve on the venture assembly to start a vacuum draw.

26. Use the extraction hose to draw out coolant to the proper level.

27. The vacuum tank has a drain valve on the bottom of the tank. Open the valve to drain coolant from the vacuum tank into a suitable container for disposal.

&#169© Copyright Chevrolet. All rights reserved

Coolant Temperature Sensor Replacement

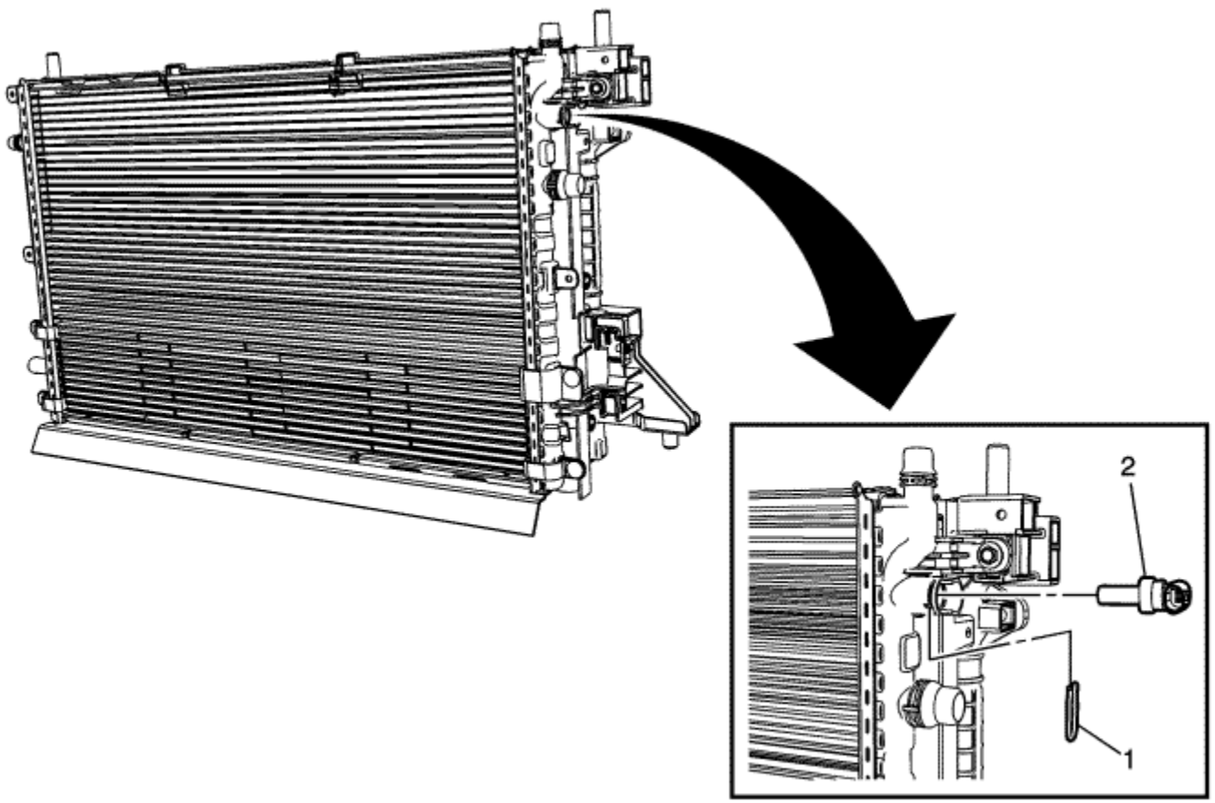

Callout	Component Name
Preliminary Procedure	

1. Partially drain the coolant just below the level of the coolant temperature sensor. Refer to Drive Motor Generator Power Inverter Module Cooling System Draining and Filling
2. Remove the front fascia. Refer to Front Bumper Fascia Removal and Installation : Volt → Ampera

3. Disconnect the electrical connector from the coolant temperature sensor.

1	Coolant Temperature Sensor Retaining Clip.
2	Coolant Temperature Sensor

© Copyright Chevrolet. All rights reserved

Generator Control Module Coolant Tank Hose Replacement

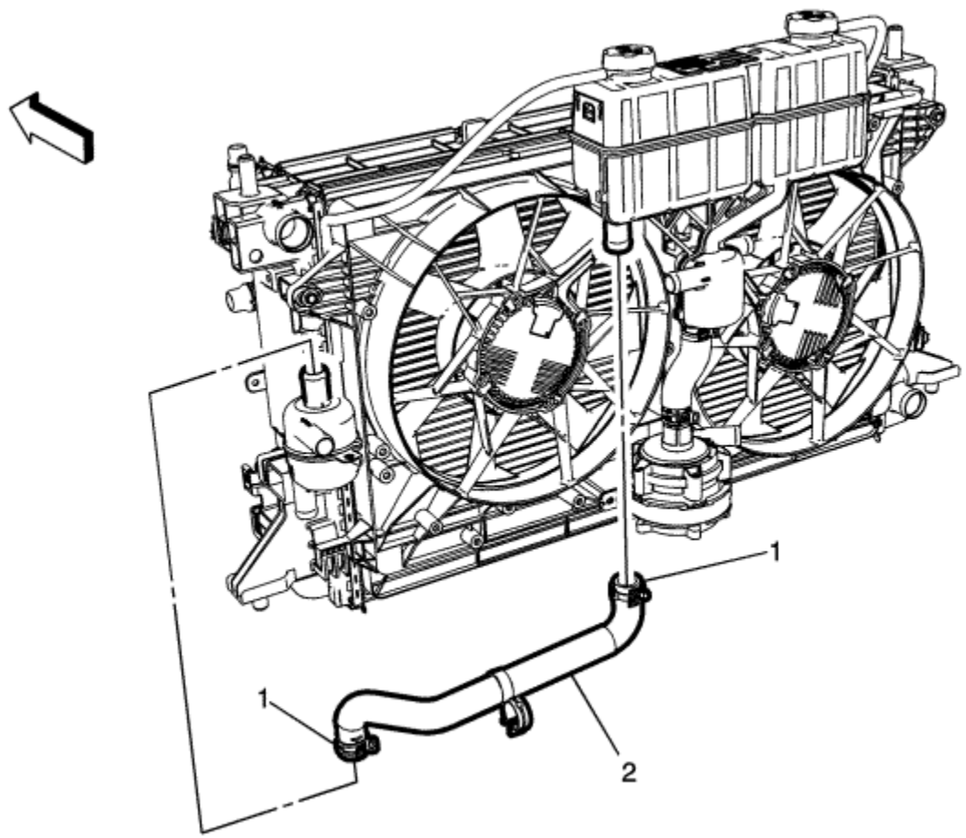

Callout	Component Name
Preliminary Procedures	
1. Drain the coolant. Refer to Drive Motor Generator Power Inverter Module Cooling System Draining and Filling 2. Remove the left front headlamp. Refer to Headlamp Replacement : Volt → Ampera	

1	Generator Control Module Coolant Tank Hose Clamps (Qty: 2) **Procedure** Reposition the generator control module coolant tank hose clamps using *BO-38185* hose clamp pliers . **Special Tools** *BO-38185* Hose Clamp Pliers For equivalent regional tools, Refer to Special Tools
2	Generator Control Module Coolant Tank Hose **Procedure** Unclip drive motor battery radiator outlet hose from hose. **Tip** Replace corroded hose clamps and brackets.

© Copyright Chevrolet. All rights reserved

Drive Motor Generator Control Module Coolant Pump Hose Replacement

Special Tools

BO-38185 Hose Clamp Pliers

For equivalent regional tools, Refer toSpecial Tools

Removal Procedure

Note: Replace corroded hose clamps and brackets.

1. Remove the front wheelhouse front liner on the driver's side. Refer to Front Wheelhouse Front Liner Replacement

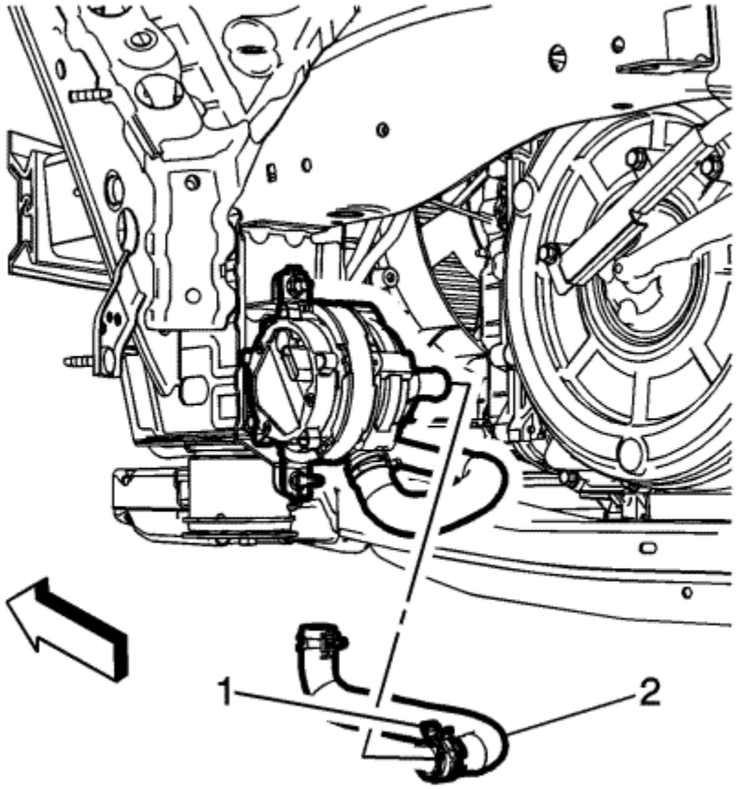

2. Place a drain pan under pump.
3. Remove the drive motor generator control module coolant pump hose clamp (1) at generator control module coolant pump using *BO-38185* Hose Clamp Pliers .
4. Remove the drive motor generator control module coolant pump hose (2) from the generator control module coolant pump.

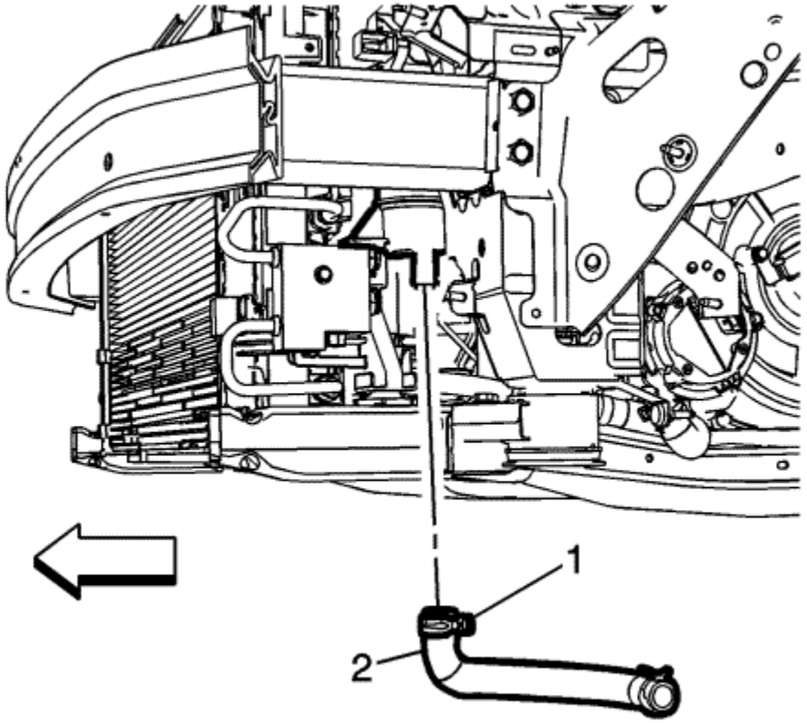

5. Remove the drive motor generator control module coolant pump hose clamp (1) at drive motor battery coolant air separator using *BO-38185* Hose Clamp Pliers .
6. Remove the drive motor generator control module coolant pump hose (2) from drive motor battery coolant air separator.
7. Remove the drive motor generator control module coolant pump hose from the vehicle.

Installation Procedure

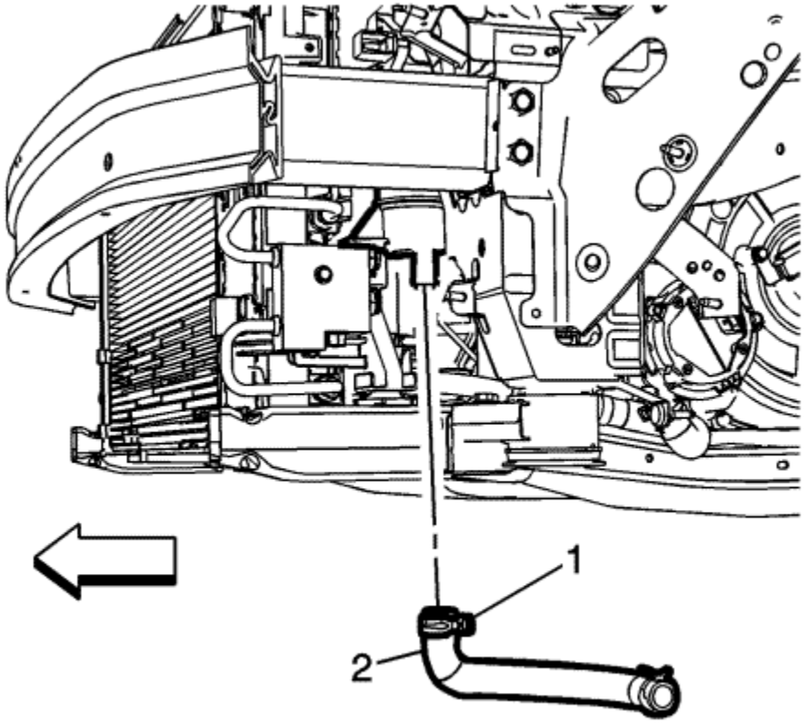

1. Install the drive motor generator control module coolant pump hose to the vehicle.
2. Install the drive motor generator control module coolant pump hose (2) to the drive motor battery coolant air separator.
3. Install the drive motor generator control module coolant pump hose clamp (1) at drive motor battery coolant air separator using *BO-38185* Hose Clamp Pliers .

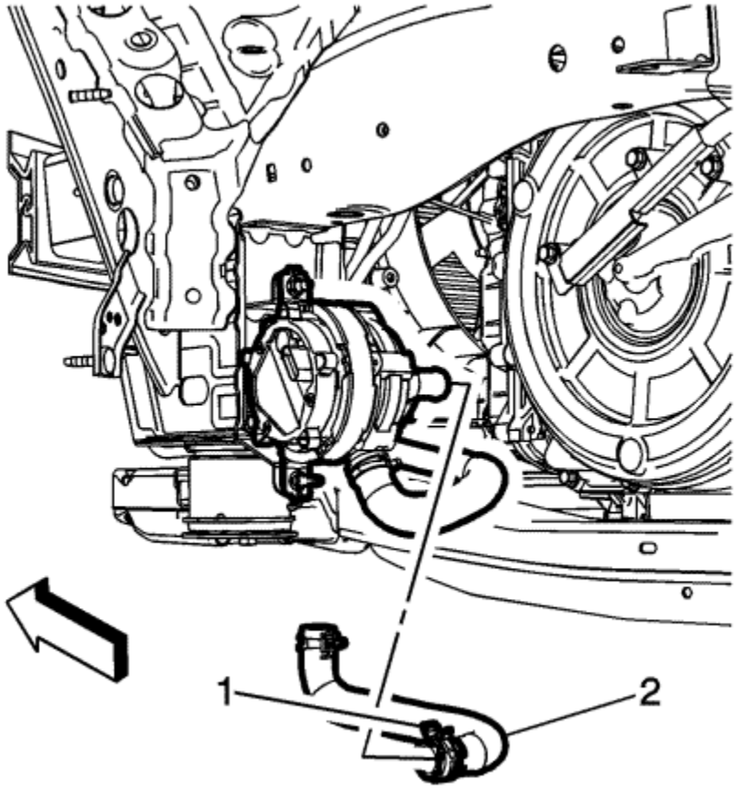

4. Install the drive motor generator control module coolant pump hose (2) to the generator control module coolant pump.
5. Install the drive motor generator control module coolant pump hose clamp (1) at generator control module coolant pump using *BO-38185* Hose Clamp Pliers .
6. Install the front wheelhouse front liner on the driver's and passenger side. Refer to Front Wheelhouse Front Liner Replacement
7. Remove the drain pan.
8. Fill the cooling system.

© Copyright Chevrolet. All rights reserved

Drive Motor Generator Control Module Cooling Outlet Hose Replacement

Special Tools

BO-38185 Hose Clamp Pliers

For equivalent regional tools, Refer toSpecial Tools

Removal Procedure

Note: Replace corroded hose clamps and brackets.

1. Drain the cooling system. Refer to Drive Motor Generator Power Inverter Module Cooling System Draining and Filling
2. Remove the front wheelhouse front liner on the driver's and passenger side. Refer to Front Wheelhouse Front Liner Replacement
3. Remove the front bumber fascia. Refer to Front Bumper Fascia Removal and Installation : Volt → Ampera
4. Unfasten and reposition the drive motor battery coolant pump with out draining the battery cooling system. Refer to Drive Motor Battery Coolant Pump Replacement
5. Unbolt and reposition the drive motor battery coolant cooler outlet hose Refer to Drive Motor Battery Coolant Cooler Outlet Hose Replacement
6. Unbolt and reposition the drive motor battery coolant inlet hose. Refer to Drive Motor Battery Coolant Inlet Hose Replacement

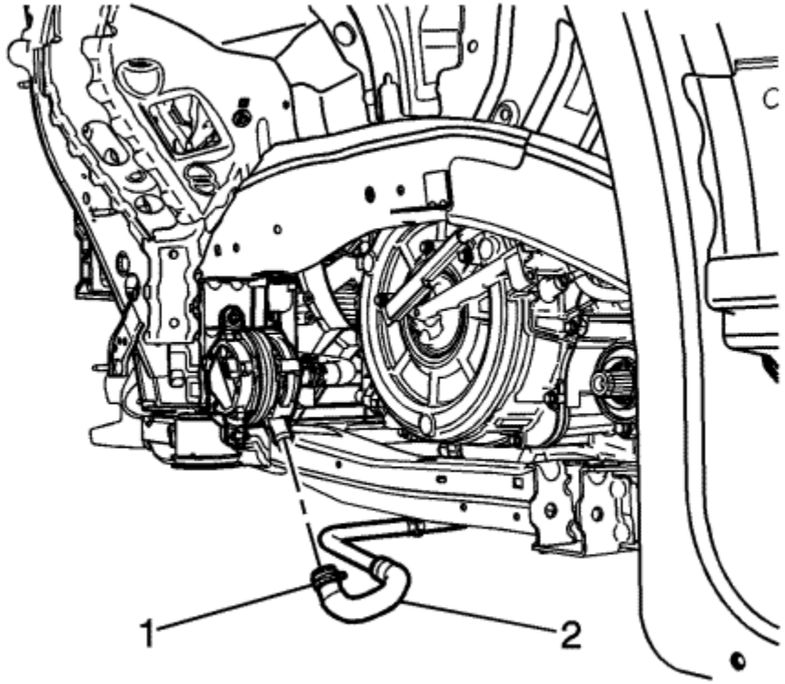

7. Remove the drive motor generator control module cooling outlet hose clamp (1) at generator control module coolant pump using *BO-38185* Hose Clamp Pliers .
8. Remove the drive motor generator control module cooling outlet hose (2) from the generator control module coolant pump.

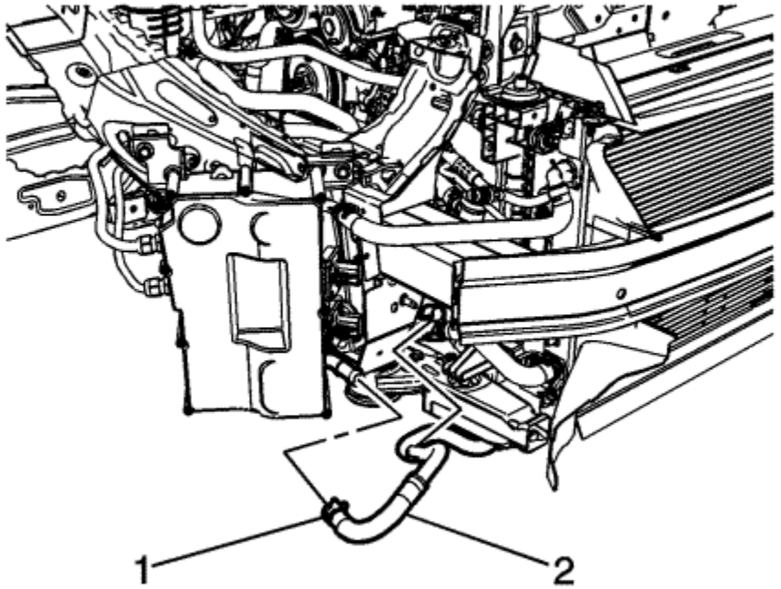

9. Remove the drive motor generator control module cooling outlet hose clamp (1) at drive motor battery charger using *BO-38185* Hose Clamp Pliers .
10. Remove the drive motor generator control module cooling outlet hose (2) from drive motor battery charger.

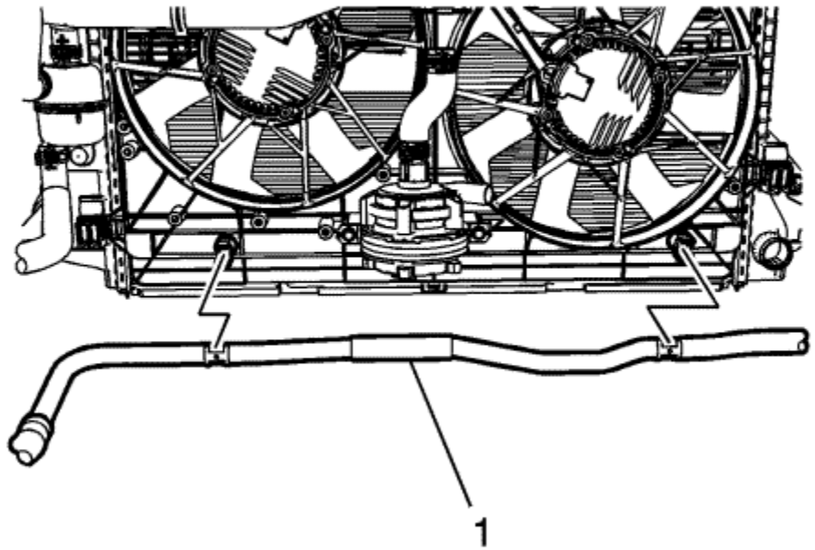

11. Disconnect the drive motor generator control module cooling outlet hose (1) from the cooling fan and shroud.
12. Remove the drive motor generator control module cooling outlet hose from the vehicle.

Installation Procedure

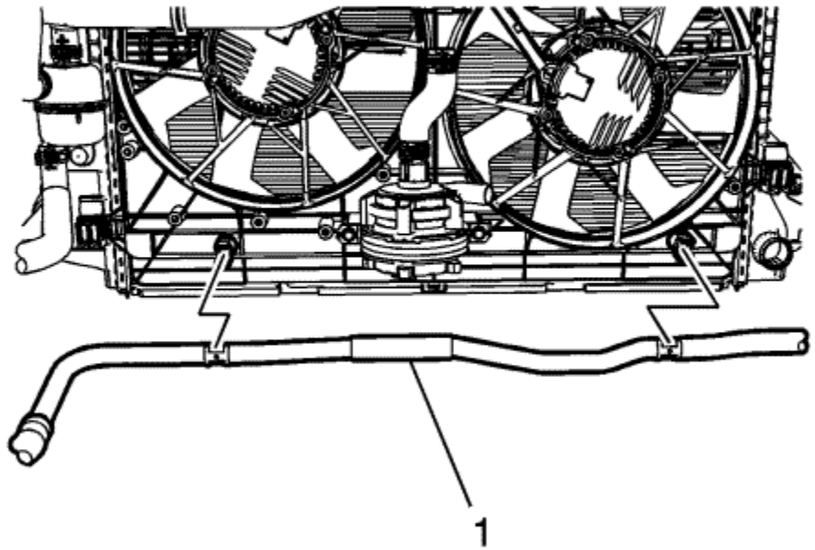

1. Install the drive motor generator control module cooling outlet hose to the vehicle.
2. Connect the drive motor generator control module cooling outlet hose (1) to the cooling fan and shroud.

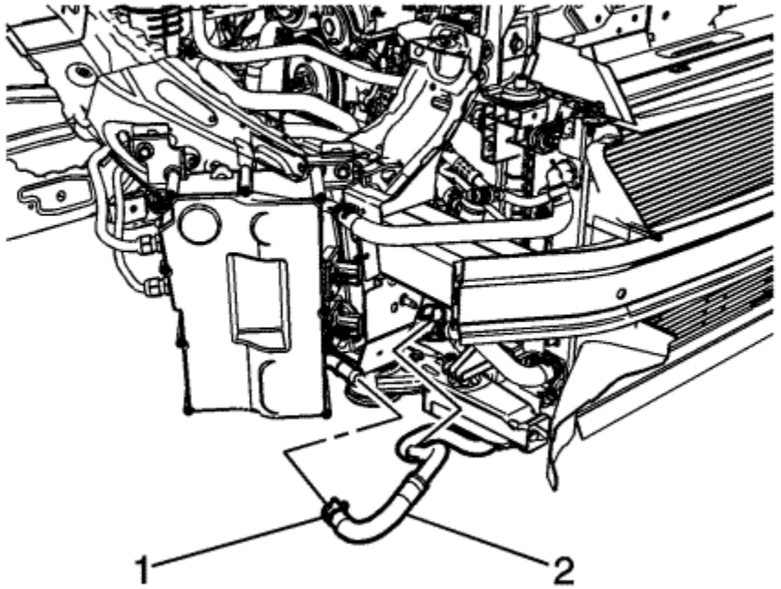

3. Install the drive motor generator control module cooling outlet hose (2) to the drive motor battery charger.
4. Install the drive motor generator control module cooling outlet hose clamp (1) at drive motor battery charger using *BO-38185* Hose Clamp Pliers .

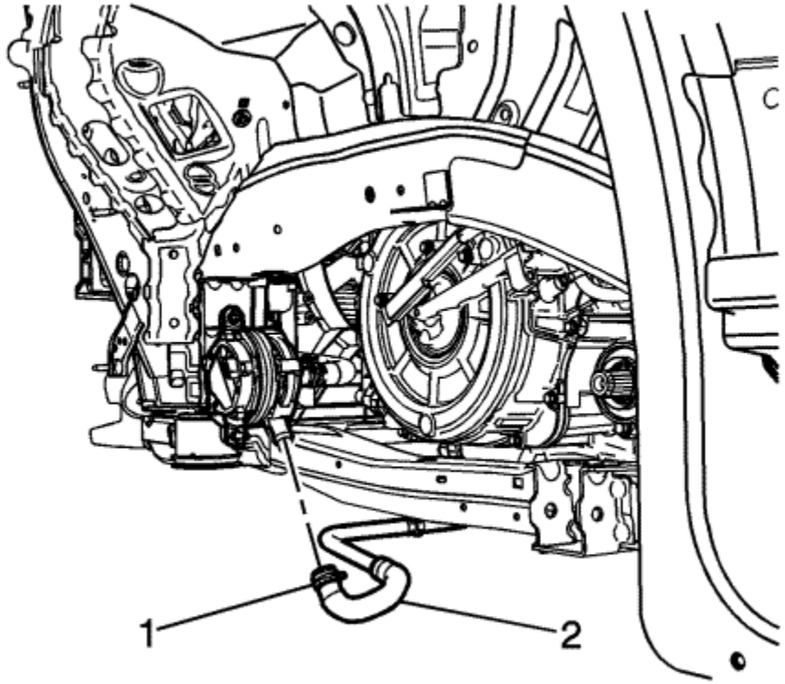

5. Install the drive motor generator control module cooling outlet hose (2) to the generator control module coolant pump.
6. Install the drive motor generator control module cooling outlet hose clamp (1) at generator control module coolant pump using *BO-38185* Hose Clamp Pliers .
7. Reposition and bolt the drive motor battery coolant inlet hose. Refer to Drive Motor Battery Coolant Inlet Hose Replacement
8. Reposition and bolt the drive motor battery coolant cooler outlet hose Refer to Drive Motor Battery Coolant Cooler Outlet Hose Replacement
9. Reposition and fasten the drive motor battery coolant pump with out draining the battery cooling system. Refer to Drive Motor Battery Coolant Pump Replacement
10. Install the front bumper fascia. Refer to Front Bumper Fascia Removal and Installation : Volt → Ampera
11. Install the front wheelhouse front liner on the driver's and passenger side. Refer to Front Wheelhouse Front Liner Replacement
12. Fill the cooling system. Refer to Drive Motor Generator Power Inverter Module Cooling System Draining and Filling

© Copyright Chevrolet. All rights reserved

Drive Motor Generator Control Module Radiator Outlet Hose Replacement

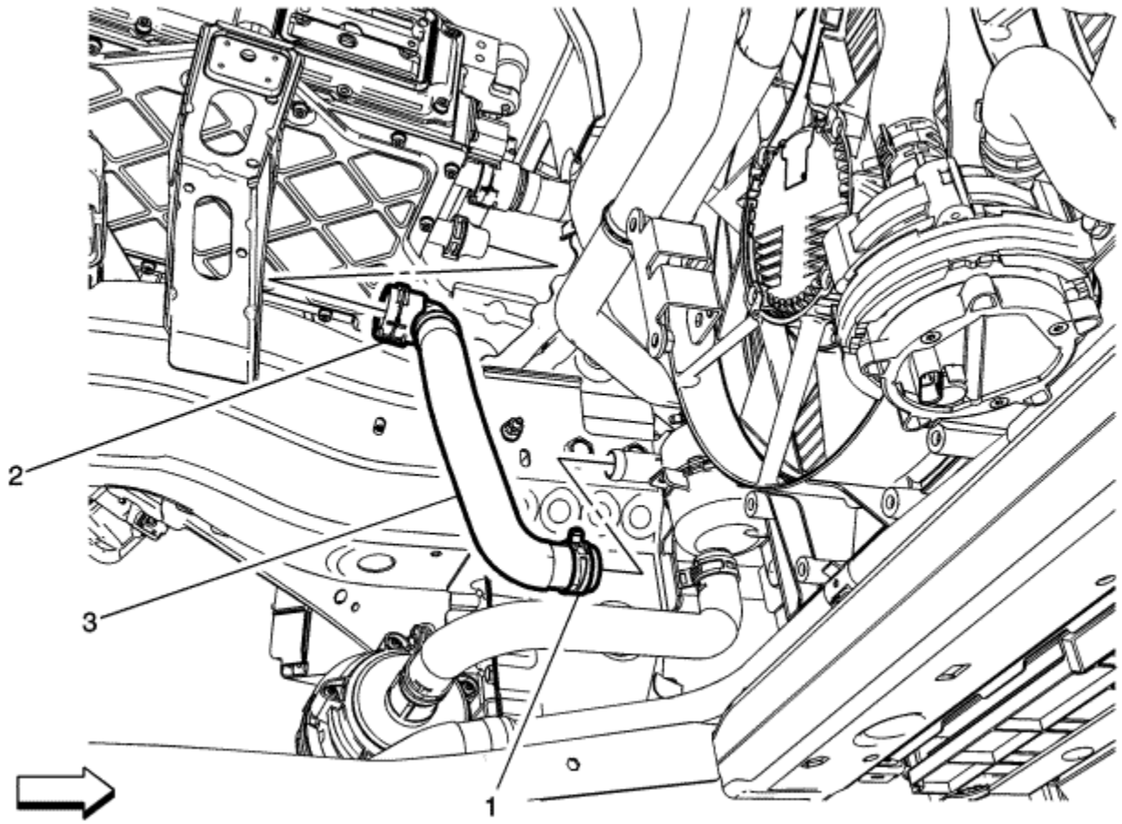

Callout	Component Name
Preliminary Procedure	
1. Drain the coolant. Refer to Drive Motor Generator Power Inverter Module Cooling System Draining and Filling 2. Remove the front wheelhouse front liner on the driver's side. Refer to Front Wheelhouse Front Liner Replacement 3. Remove the drive motor generator power inverter module cover. Refer to Drive Motor Generator Power Inverter Module Cover Replacement	

1	Drive Motor Generator Conrtrol Module Radiator Outlet Hose Clamp **Procedure** Reposition the drive motor generator control module radiator outlet hose clamp using *BO-38185* Hose Clamp Pliers **Special Tools** *BO-38185* Hose Clamp Pliers For equivalent regional tools, Refer toSpecial Tools
2	Drive Motor Generator Control Module Radiator Outlet Hose Quick Connect Fitting
3	Drive Motor Generator Control Module Radiator Outlet Hose **Tip** Replace corroded hose clamps and brackets.

© Copyright Chevrolet. All rights reserved

Generator Control Module Coolant Radiator Hose Replacement

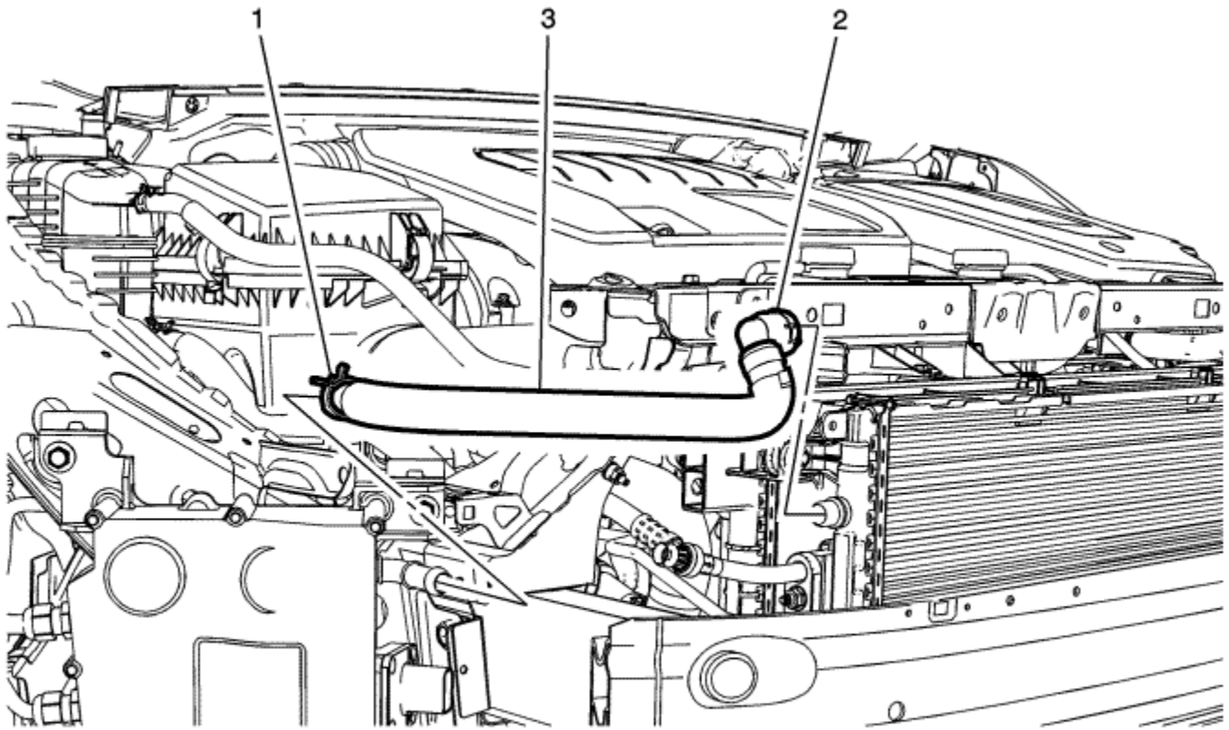

Callout	Component Name
Preliminary Procedure	
1. Drain the coolant. Refer to Drive Motor Generator Power Inverter Module Cooling System Draining and Filling 2. Remove the front bumber fascia. Refer to Front Bumper Fascia Removal and Installation : Volt → Ampera	

1	Generator Control Module Coolant Radiator Hose Clamp **Procedure** Reposition the generator control module coolant radiator hose clamp using *BO-38185* Hose Clamp Pliers **Special Tools** *BO-38185* Hose Clamp Pliers For equivalent regional tools, Refer toSpecial Tools
2	Generator Control Module Coolant Radiator Hose Quick Connect
3	Generator Control Module Coolant Radiator Hose **Tip** Replace corroded hose clamps and brackets.

© Copyright Chevrolet. All rights reserved

Generator Control Module Coolant Pump Replacement

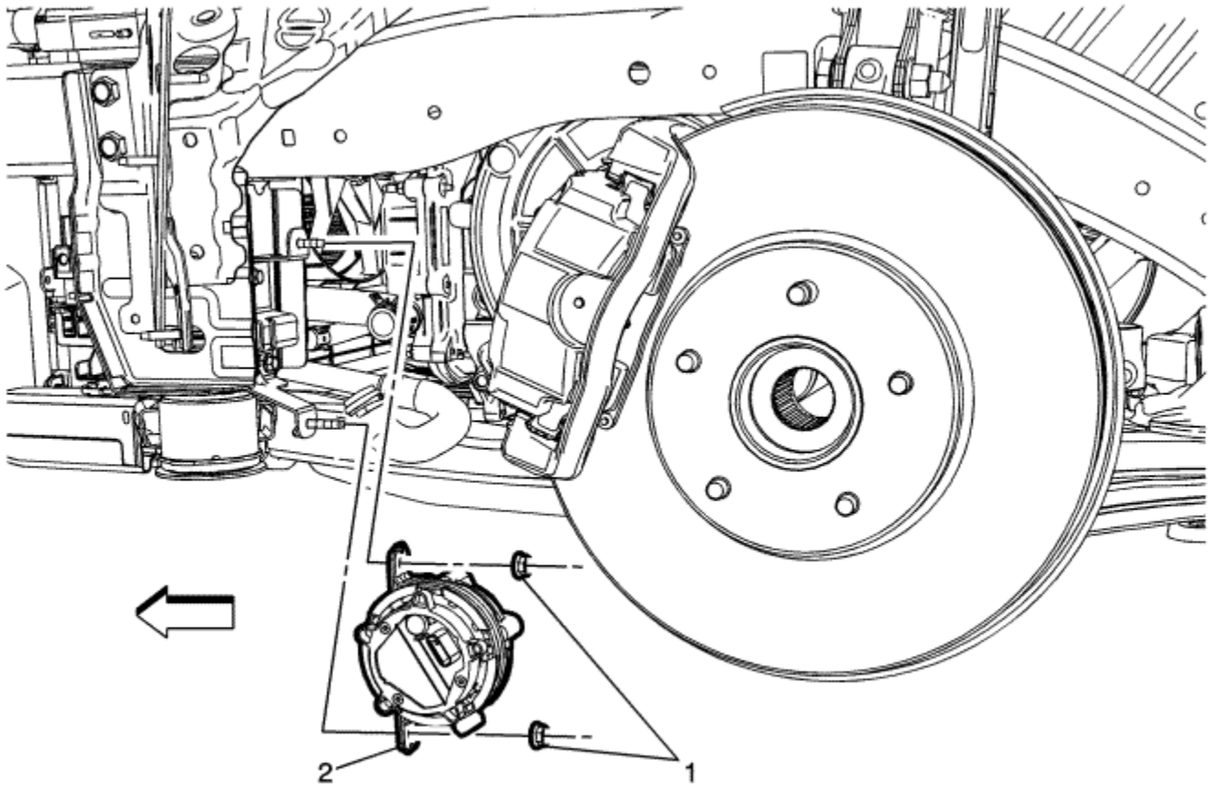

Callout	Component Name
Danger: Do not use a service jack in locations other than those specified to lift this vehicle. Lifting the vehicle with a jack in those other locations could cause the vehicle to slip off the jack and roll; this could cause injury or death. **Preliminary Procedure**	

1. Drain the coolant. Refer to Drive Motor Generator Power Inverter Module Cooling System Draining and Filling
2. Remove the front wheelhouse front liner on the driver's side. Refer to Front Wheelhouse Front Liner Replacement
3. Remove the drive motor generator control module coolant pump hose. Refer to Drive Motor Generator Control Module Coolant Pump Hose Replacement
4. Remove the drive motor generator control module cooling outlet hose. Refer to Drive Motor Generator Control Module Cooling Outlet Hose Replacement

1	Generator Control Module Coolant Pump Bolts (Qty: 2). **Caution:** Refer to Fastener Caution in the Preface section. **Tighten** 9 N·m (80 lb in)
2	Generator Control Module Coolant Pump.

© Copyright Chevrolet. All rights reserved

Radiator Grille Screen Replacement

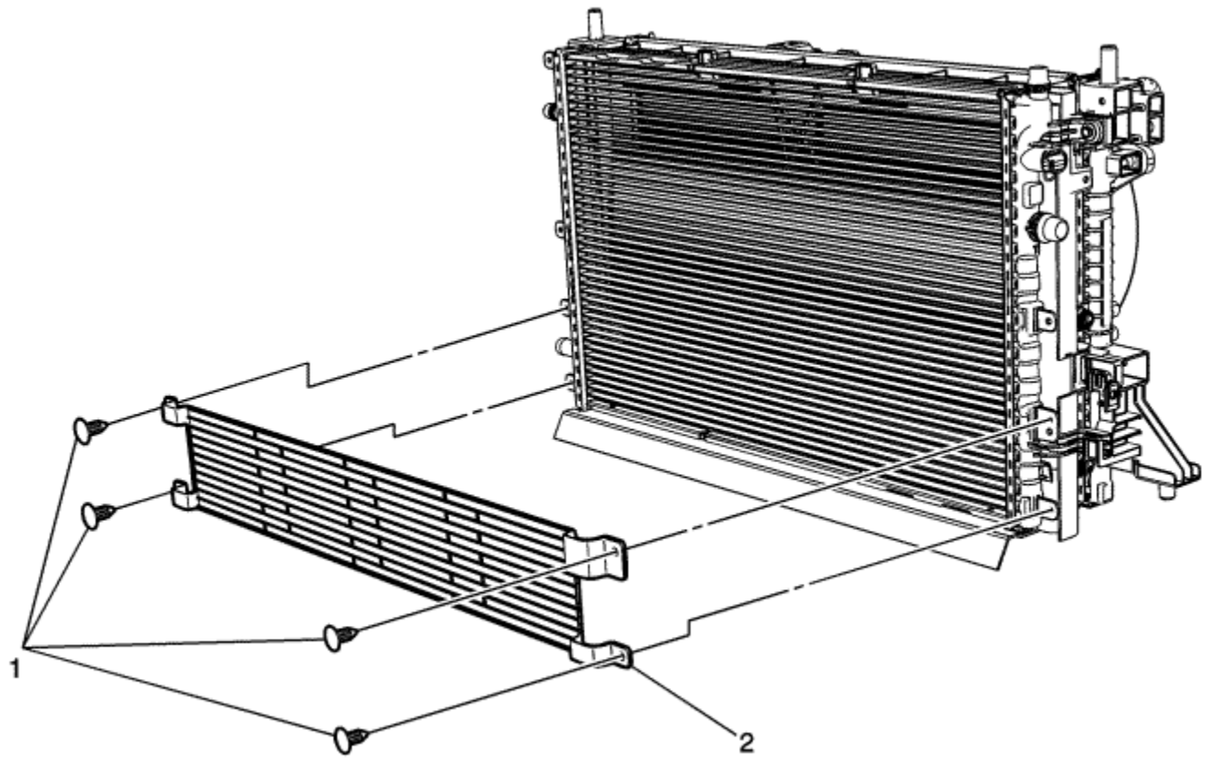

Callout	Component Name
Preliminary Procedure Remove front bumper fascia. Refer to Front Bumper Fascia Removal and Installation : Volt → Ampera	
1	Radiator Grille Screen Retainers (Qty: 4)
2	Radiator Grille Screen

© Copyright Chevrolet. All rights reserved

Drive Motor Power Inverter Module Cooling Inlet Hose Replacement

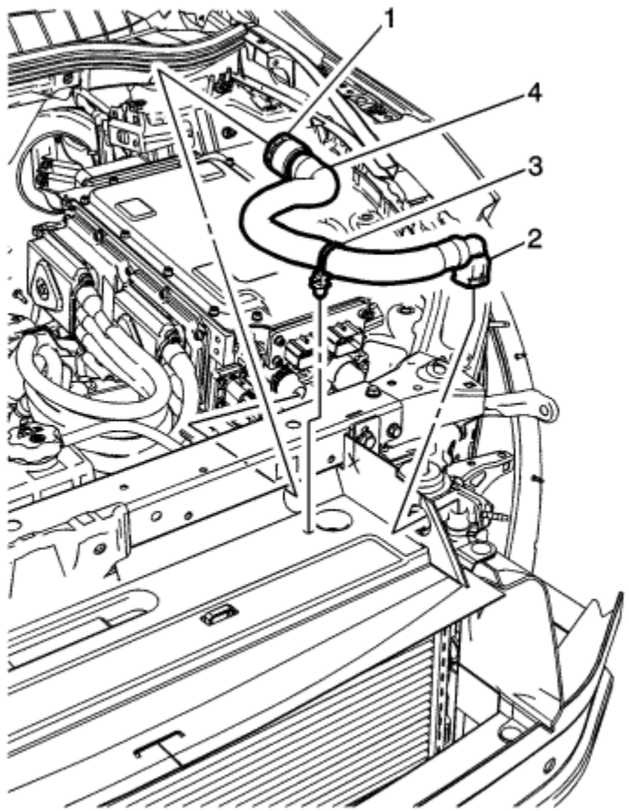

Callout	Component Name
Preliminary Procedure	

1. Drain the coolant. Refer to Drive Motor Generator Power Inverter Module Cooling System Draining and Filling
2. Remove the drive motor generator power inverter module cover. Refer to Drive Motor Generator Power Inverter Module Cover Replacement
3. Remove the front compartment front sight shield. Refer to Front Compartment Front Sight Shield Replacement : Volt → Ampera

1	Drive Motor Power Inverter Module Cooling Inlet Hose Quick Connect. **Procedure** Release clip and slide hose off fitting.
2	Drive Motor Power Inverter Module Cooling Inlet Hose Quick Connect. **Procedure** Release clip and slide hose off fitting.
3	Drive Motor Power Inverter Module Cooling Inlet Hose Retainer.
4	Drive Motor Power Inverter Module Cooling Inlet Hose. **Tip** Replace corroded hose clamps and brackets.

© Copyright Chevrolet. All rights reserved

Drive Motor Battery Coolant Cooler Replacement

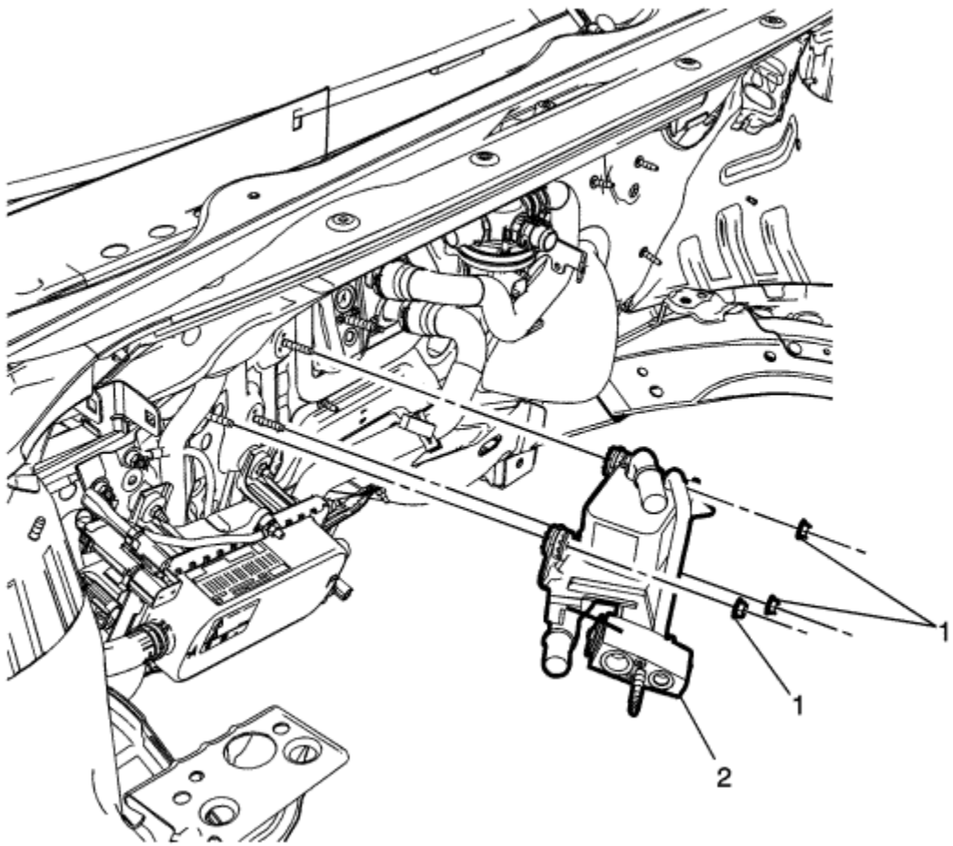

Callout	Component Name
Preliminary Procedures	

1. Drain the coolant. Refer to Drive Motor Battery Cooling System Draining and Filling .
2. Recover the refrigerant. Refer to Refrigerant Recovery and Recharging : High-Voltage Electric Compressor .
3. Remove air conditioning compressor and evaporator hose. Refer to Air Conditioning Compressor and Evaporator Hose Replacement .

4. Reposition air conditioning evaporator thermal expansion valve tube. Refer to Air Conditioning Evaporator Thermal Expansion Valve Tube Replacement .
5. Remove drive motor battery coolant cooler inlet hose from coolant cooler. Refer to Drive Motor Battery Coolant Cooler Inlet Hose Replacement .
6. Remove drive motor battery coolant cooler inlet hose assembly from coolant cooler. Refer to Drive Motor Battery Coolant Cooler Inlet Hose Assembly Replacement .

1	Drive Motor Battery Coolant Cooler Nuts (Qty: 3) **Caution:** Refer to Fastener Caution in the Preface section. **Tighten** 9 N·m (80 lb in)
2	Drive Motor Battery Coolant Cooler

© Copyright Chevrolet. All rights reserved

Drive Motor Battery Coolant Radiator Replacement

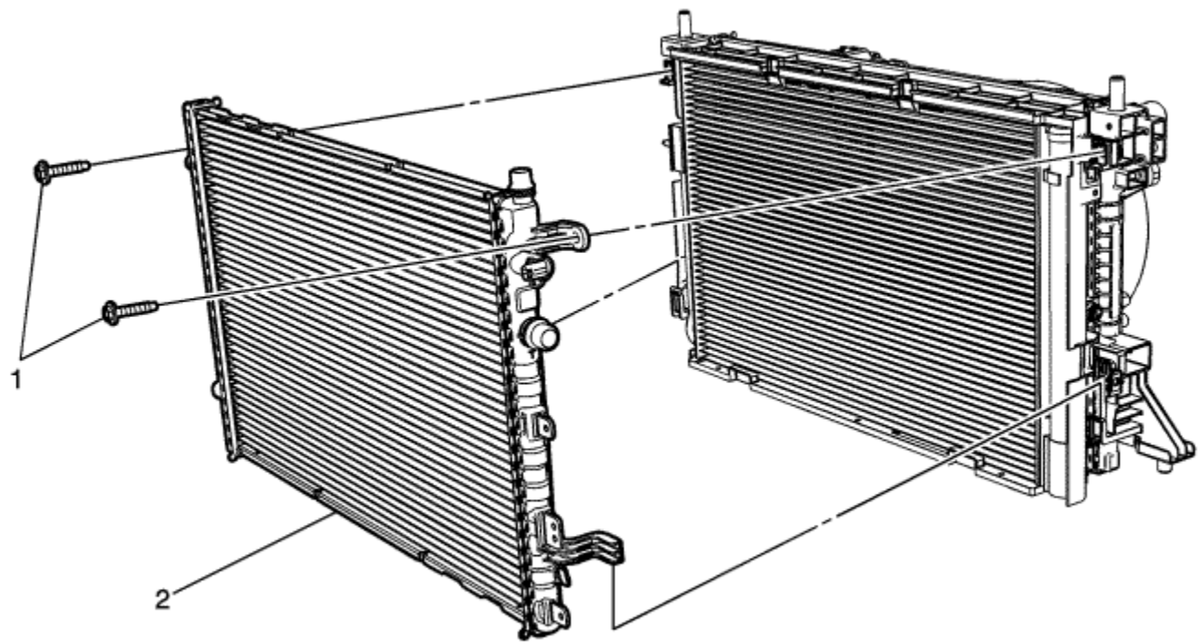

Callout	Component Name
Preliminary Procedure	
1. Drain the coolant. Refer to Drive Motor Battery Cooling System Draining and Filling and Drive Motor Generator Power Inverter Module Cooling System Draining and Filling 2. Remove the radiator air side baffels. Refer to Radiator Air Side Baffle Replacement - Left Side and Radiator Air Side Baffle Replacement - Right Side	

3. Remove the radiator air seal . Refer to Radiator Air Seal Replacement
4. Remove the radiator grille screen. Refer to Radiator Grille Screen Replacement
5. Remove the generator control module coolant radiator hose. Refer to Generator Control Module Coolant Radiator Hose Replacement
6. Remove the drive motor battery radiator inlet hose. Refer to Drive Motor Battery Radiator Inlet Hose Replacement
7. Remove the drive motor battery radiator outlet hose. Refer to Drive Motor Battery Radiator Outlet Hose Replacement
8. Remove the drive motor power inverter module cooling inlet hose. Refer to Drive Motor Power Inverter Module Cooling Inlet Hose Replacement
9. Disconnect the electrical connector from the coolant temperature sensor.

1	Drive Motor Battery Coolant Radiator Bolts (Qty: 2). **Caution:** Refer to Fastener Caution in the Preface section. **Tighten** 9 N·m (80 lb in)
2	Drive Motor Battery Coolant Radiator

© Copyright Chevrolet. All rights reserved

Drive Motor Battery Coolant Filter Replacement

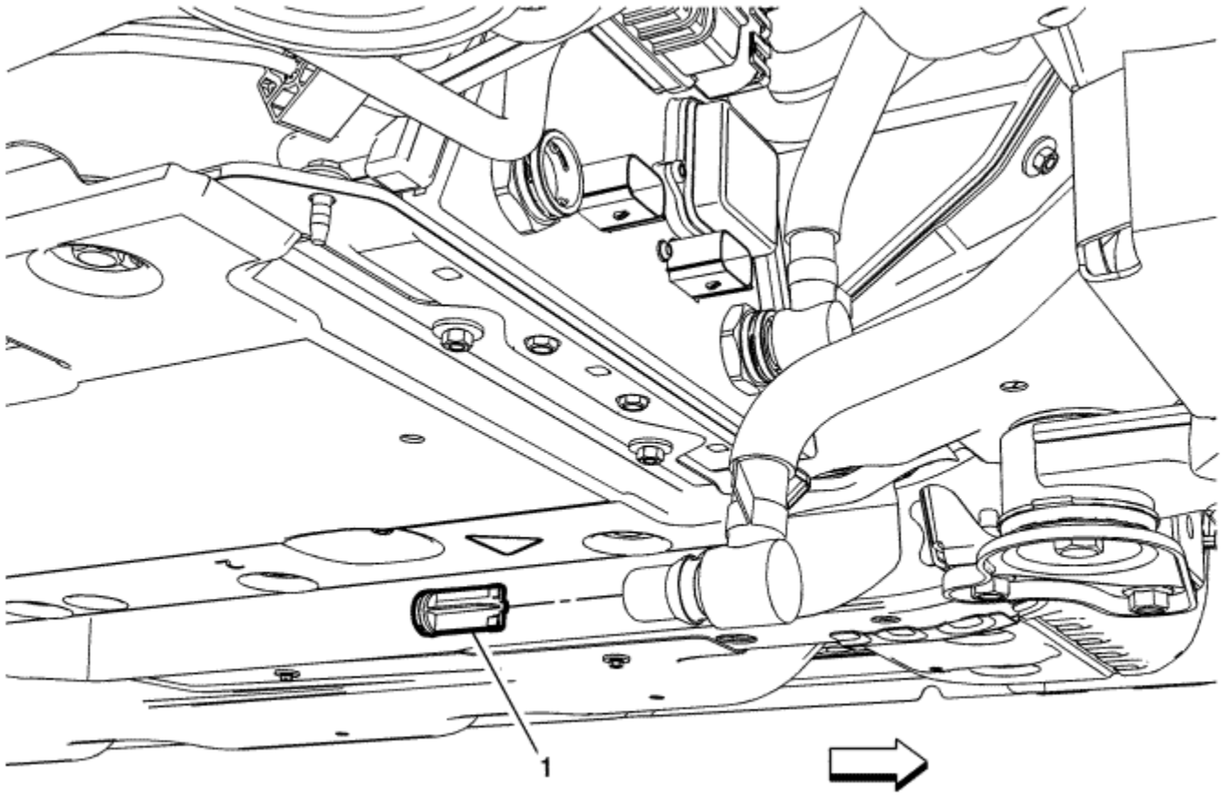

Callout	Component Name
Preliminary Procedure Remove the drive motor battery coolant cooler inlet hose assembly from the battery. Refer to Drive Motor Battery Coolant Cooler Inlet Hose Assembly Replacement	
1	Drive Motor Coolant Filter

© Copyright Chevrolet. All rights reserved

Drive Motor Battery Coolant Pump Replacement

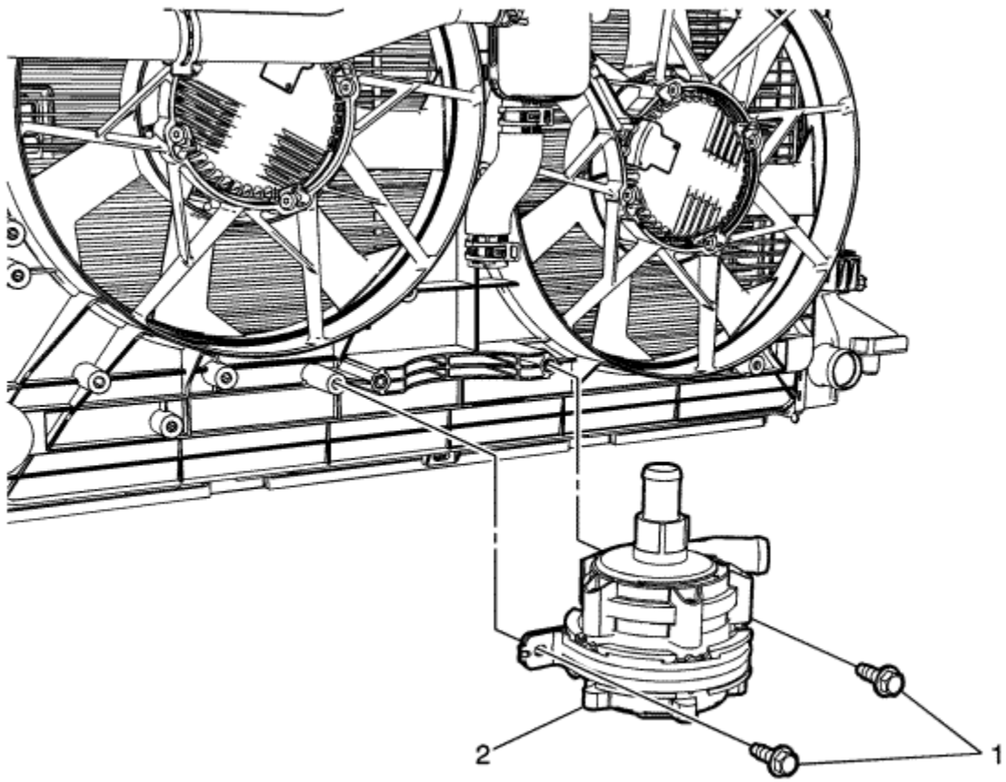

Callout	Component Name
Danger: Do not use a service jack in locations other than those specified to lift this vehicle. Lifting the vehicle with a jack in those other locations could cause the vehicle to slip off the jack and roll; this could cause injury or death. **Preliminary Procedure**	

1. Drain the coolant. Refer to Drive Motor Battery Cooling System Draining and Filling
2. Raise and support the vehicle. Refer to Lifting and Jacking the Vehicle
3. Remove the drive motor battery coolant pump inlet hose from pump. Refer to Drive Motor Battery Coolant Pump Inlet Hose Replacement
4. Remove the drive motor battery coolant inlet hose from pump. Refer to Drive Motor Battery Coolant Inlet Hose Replacement

1	Generator Control Module Coolant Pump Bolts (Qty: 2). **Caution:** Refer to Fastener Caution in the Preface section. **Tighten** 9 N·m (80 lb in)
2	Generator Control Module Coolant Pump. **Tip** Disconnect the electrical connector.

© Copyright Chevrolet. All rights reserved

Drive Motor Battery Coolant Pump Inlet Hose Replacement

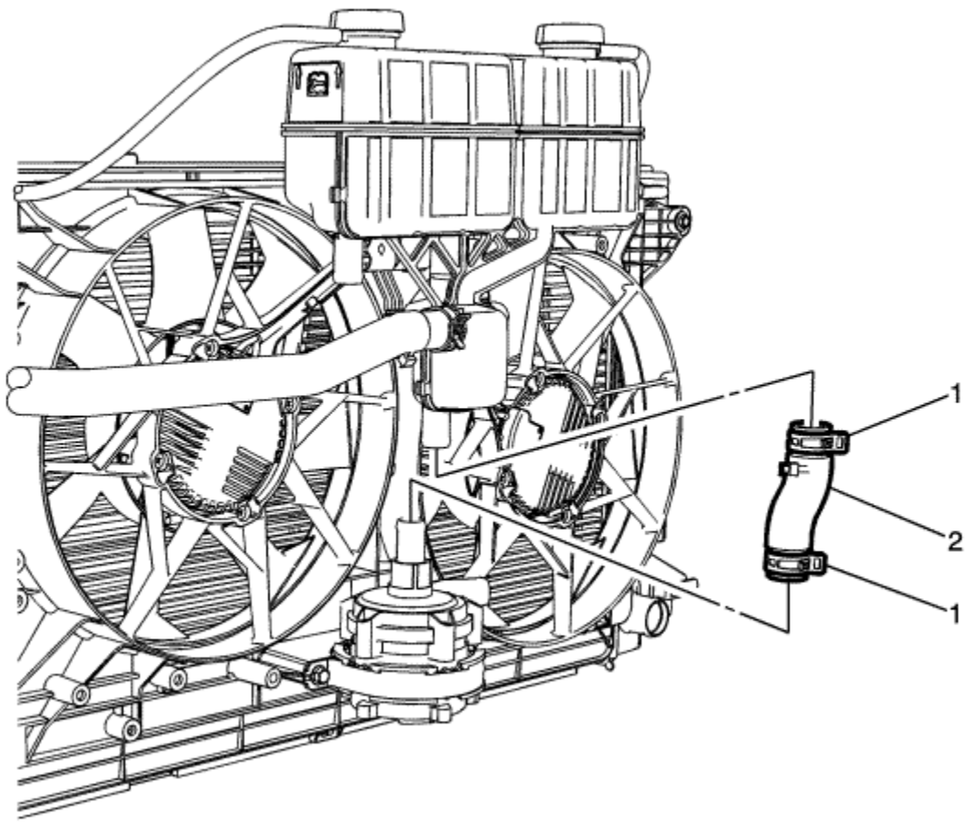

Callout	Component Name

Danger: Do not use a service jack in locations other than those specified to lift this vehicle. Lifting the vehicle with a jack in those other locations could cause the vehicle to slip off the jack and roll; this could cause injury or death.

Preliminary Procedure

1. Drain the coolant. Refer to Drive Motor Battery Cooling System Draining and Filling
2. Raise and support the vehicle. Refer to Lifting and Jacking the Vehicle

1	Drive Motor Battery Coolant Pump Inlet Hose Clamps (Qty: 2) **Procedure** Reposition the drive motor battery coolant pump inlet hose clamps using *BO-38185* Hose Clamp Pliers **Special Tools** *BO-38185* Hose Clamp Pliers For equivalent regional tools, Refer toSpecial Tools
2	Drive Motor Battery Coolant Pump Inlet Hose **Tip** Replace corroded hose clamps and brackets.

© Copyright Chevrolet. All rights reserved

Drive Motor Battery Radiator Surge Tank Replacement

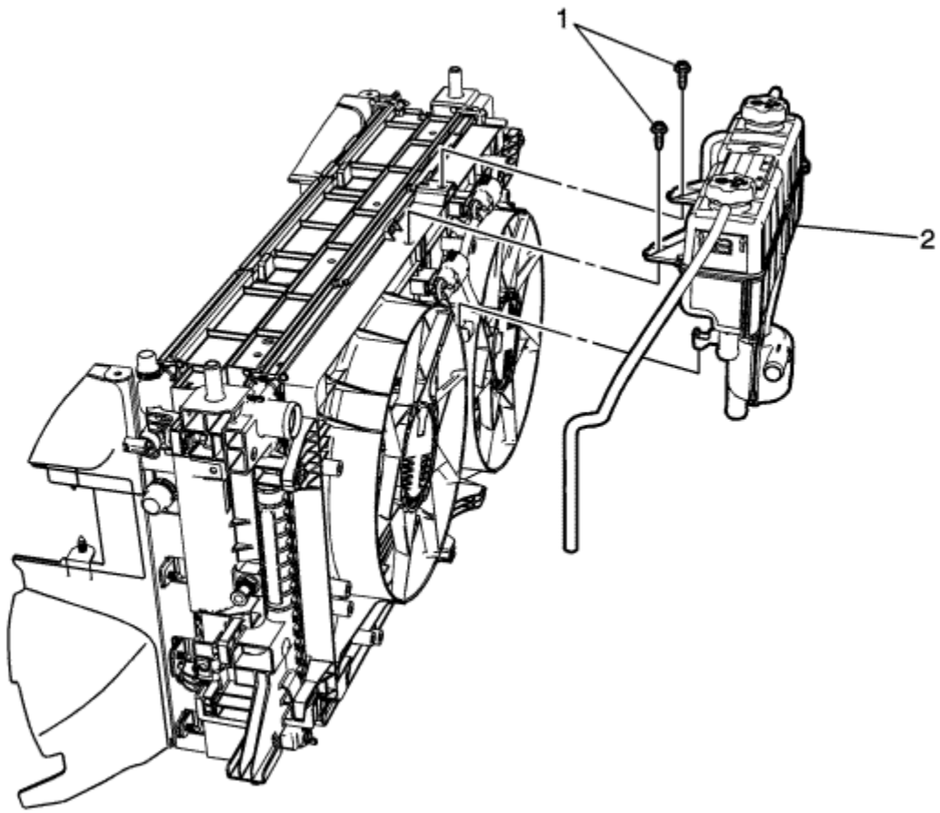

Callout	Component Name

Preliminary Procedure

1. Drain the coolant. Refer to Drive Motor Generator Power Inverter Module Cooling System Draining and Filling
2. Remove drive motor battery coolant pump inlet hose. Refer to Drive Motor Battery Coolant Pump Inlet Hose Replacement
3. Remove drive motor battery coolant cooler outlet hose. Refer to Drive Motor Battery Coolant Cooler Outlet Hose Replacement

4. Remove drive motor battery radiator outlet hose. Refer to Drive Motor Battery Radiator Outlet Hose Replacement
5. Remove the generator control module coolant tank hose. Refer to Generator Control Module Coolant Tank Hose Replacement
6. Remove radiator upper brackets and reposition radiator rearwards to allow access to bolts. Refer to Radiator Upper Bracket Replacement

1	Drive Motor Battery Radiator Surge Tank Bolts (Qty: 2) **Caution:** Refer to Fastener Caution in the Preface section. **Tighten** 9 N·m (80 lb in)
2	Drive Motor Battery Radiator Surge Tank

© Copyright Chevrolet. All rights reserved

Drive Motor Battery Coolant/Air Separator Replacement

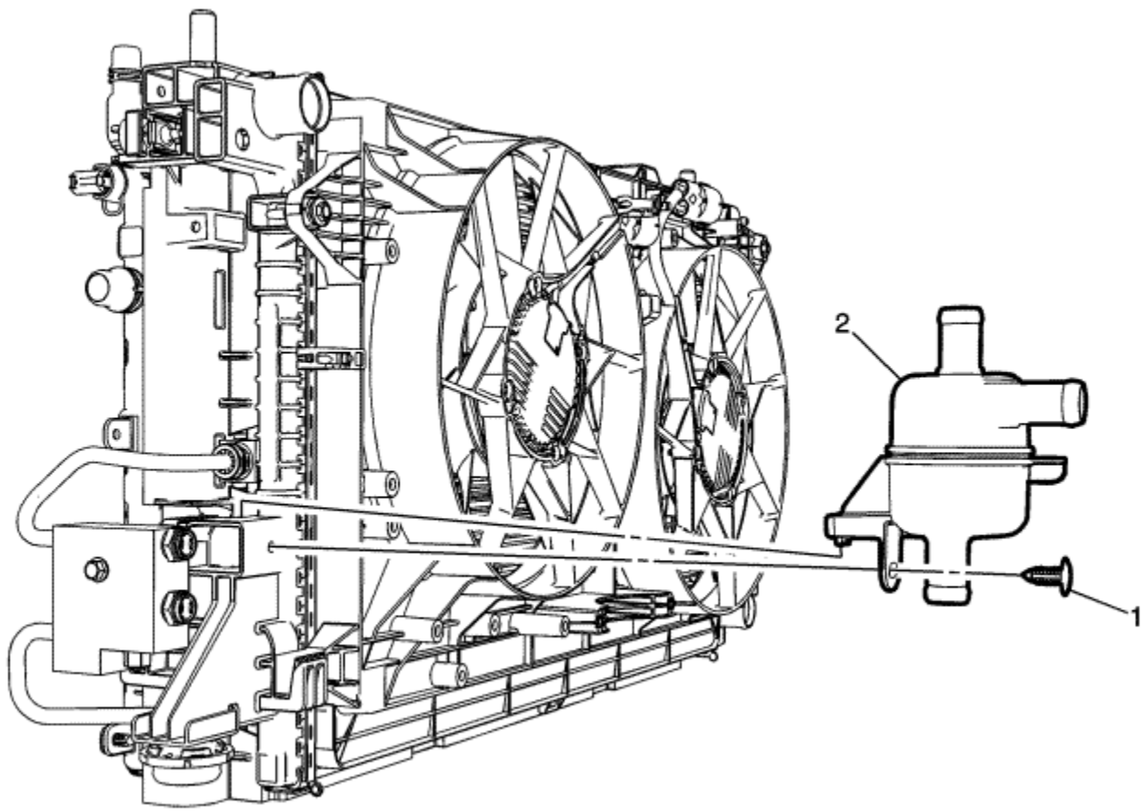

Callout	Component Name
Preliminary Procedure	

1. Drain the coolant. Refer to Drive Motor Generator Power Inverter Module Cooling System Draining and Filling
2. Remove the front bumper fascia. Refer to Front Bumper Fascia Removal and Installation : Volt → Ampera
3. Remove the drive motor generator control module coolant pump hose. Refer to Drive Motor Generator Control Module Coolant Pump Hose Replacement

4. Remove the drive motor generator control module radiator outlet hose. Refer to Drive Motor Generator Control Module Radiator Outlet Hose Replacement
5. Remove the generator control module coolant tank hose. Refer to Generator Control Module Coolant Tank Hose Replacement

1	Drive Motor Battery Coolant Air Separator Retainer.
2	Drive Motor Battery Coolant Air Separator.

© Copyright Chevrolet. All rights reserved

Drive Motor Battery Coolant Cooler Outlet Hose Replacement

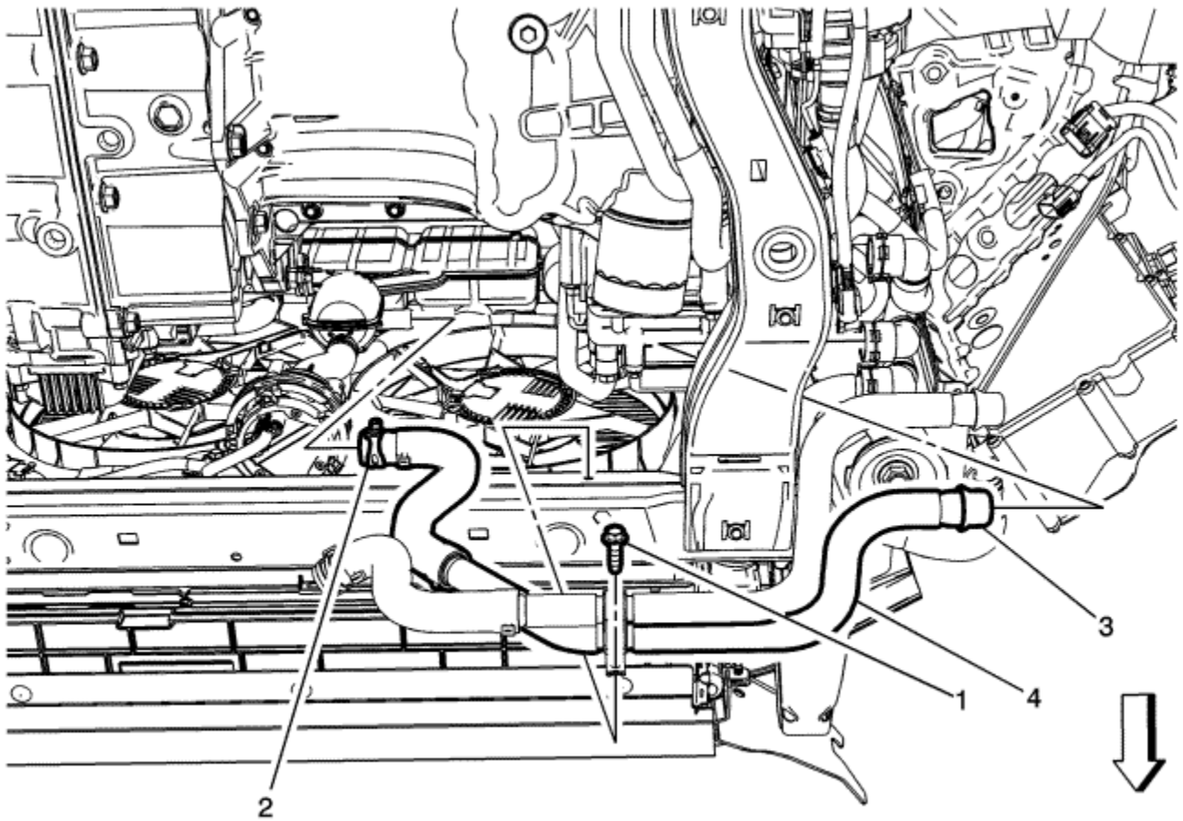

Callout	Component Name

Danger: Do not use a service jack in locations other than those specified to lift this vehicle. Lifting the vehicle with a jack in those other locations could cause the vehicle to slip off the jack and roll; this could cause injury or death.

Preliminary Procedure

1. Drain the coolant. Refer to Drive Motor Generator Power Inverter Module Cooling System Draining and Filling
2. Raise and support the vehicle. Refer to Lifting and Jacking the Vehicle
3. Remove the front wheelhouse front liner on the passenger side. Refer to Front Wheelhouse Front Liner Replacement

1	Drive Motor Battery Coolant Cooler Outlet Hose Bolt **Caution:** Refer to Fastener Caution in the Preface section. **Tighten** 9 N·m (80 lb in)
2	Drive Motor Battery Coolant Cooler Outlet Hose Clamp **Procedure** Reposition the drive motor battery coolant cooler outlet hose clamp using *BO-38185* Hose Clamp Pliers **Special Tools** *BO-38185* Hose Clamp Pliers For equivalent regional tools, Refer toSpecial Tools
3	Drive Motor Battery Coolant Cooler Outlet Hose Quick Disconnect Fitting
4	Drive Motor Battery Coolant Cooler Outlet Hose **Tip** Replace corroded hose clamps and brackets.

© Copyright Chevrolet. All rights reserved

Drive Motor Battery Coolant Flow Control Valve Replacement

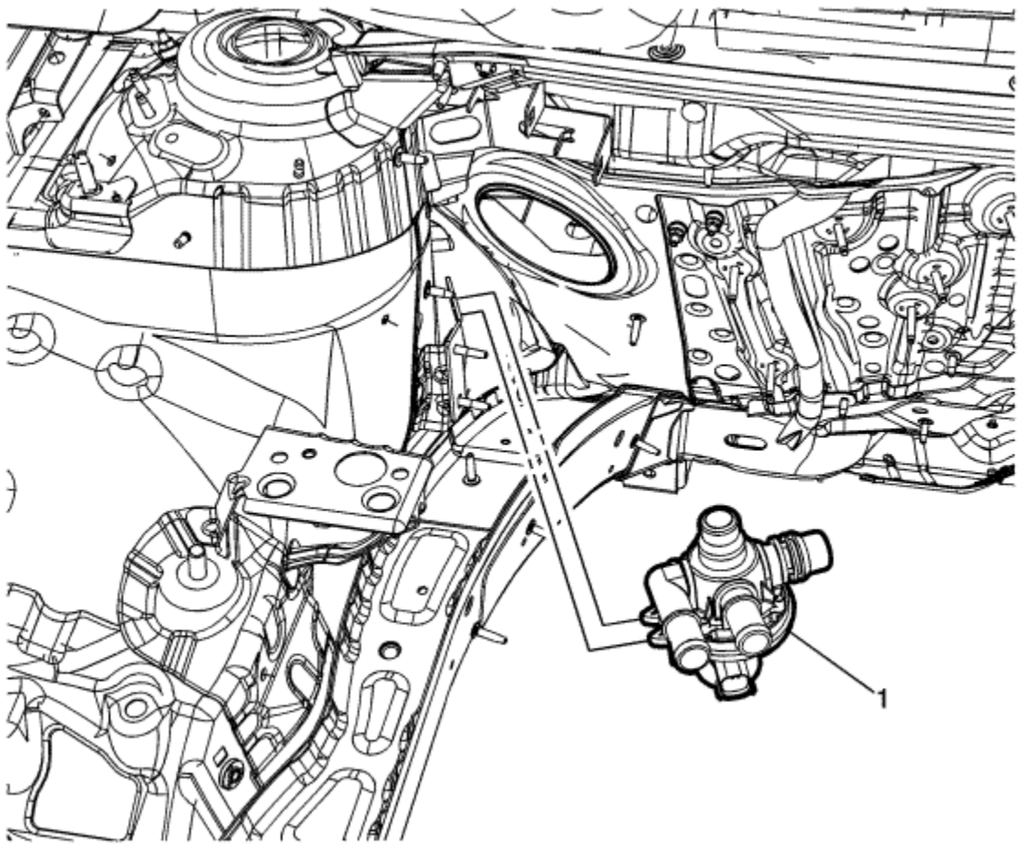

Callout	Component Name

Preliminary Procedure

1. Remove the throttle body assembly. Refer to Throttle Body Assembly Replacement
2. Remove both 40-way wire harness connectors.
3. Pinch and remove the drive motor battery coolant outlet hose from valve. Refer to Drive Motor Battery Coolant Outlet Hose Replacement

4. Pinch and remove the drive motor battery coolant cooler inlet hose from valve. Refer to Drive Motor Battery Coolant Cooler Inlet Hose Replacement
5. Pinch and remove the drive motor battery coolant flow control valve inlet hose assembly from valve. Refer to Drive Motor Battery Coolant Cooler Inlet Hose Assembly Replacement
6. Disconnect the electrical connector from the drive motor battery coolant flow control valve.

1	Drive Motor Battery Coolant Flow Control Valve. **Tip** Prevent coolant contact with electrical connectors. **Procedure** 1. Use a nut to compress the two plastic clips that retain the valve to the metal bracket. 2. Check and fill the coolant. Refer to Drive Motor Battery Cooling System Draining and Filling 3. Perform the drive motor battery coolant flow control valve learn procedure.

© Copyright Chevrolet. All rights reserved

Drive Motor Battery Coolant Inlet Hose Replacement

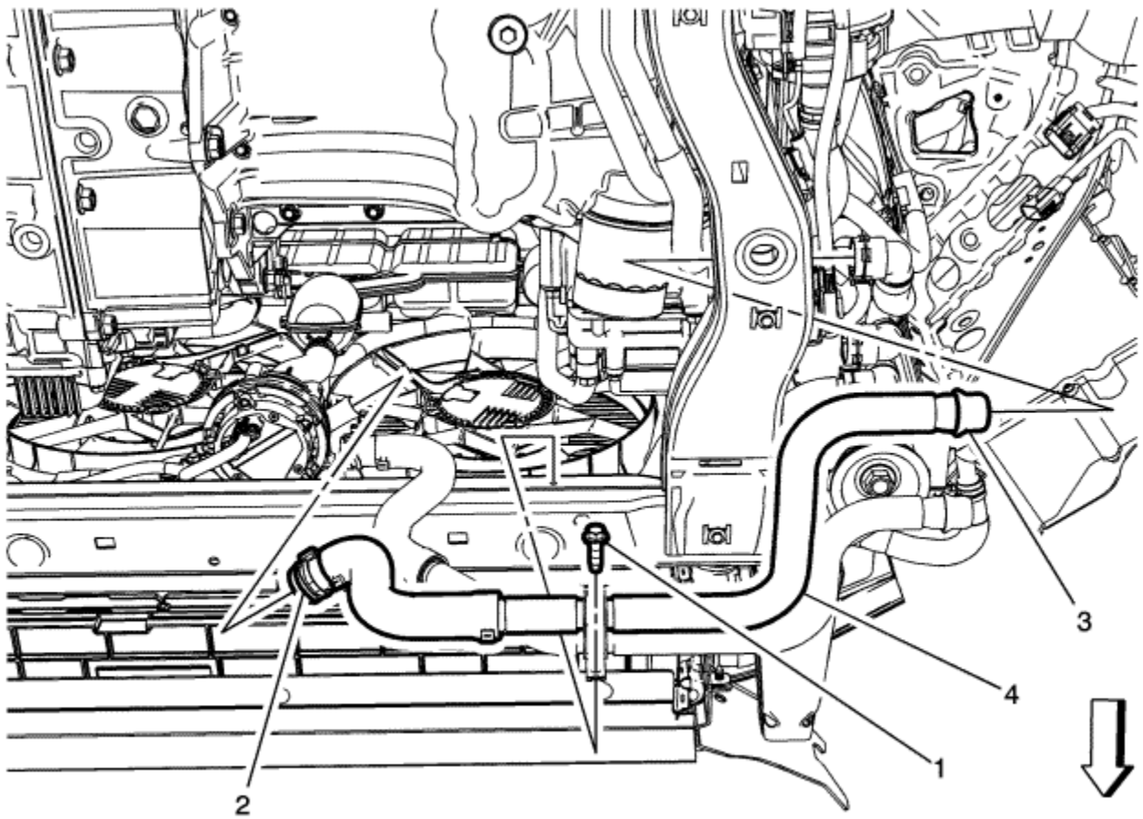

Callout	Component Name

Danger: Do not use a service jack in locations other than those specified to lift this vehicle. Lifting the vehicle with a jack in those other locations could cause the vehicle to slip off the jack and roll; this could cause injury or death.

Preliminary Procedure

1. Drain the coolant. Refer to Drive Motor Generator Power Inverter Module Cooling System Draining and Filling
2. Raise and support the vehicle. Refer to Lifting and Jacking the Vehicle
3. Remove the front wheelhouse front liner on the passenger side. Refer to Front Wheelhouse Front Liner Replacement

1	Drive Motor Battery Coolant Inlet Hose Bolt **Caution:** Refer to Fastener Caution in the Preface section. **Tighten** 9 N·m (80 lb in)
2	Drive Motor Battery Coolant Inlet Hose Clamp **Procedure** Reposition the drive motor battery coolant inlet hose clamp using *BO-38185* Hose Clamp Pliers **Special Tools** *BO-38185* Hose Clamp Pliers For equivalent regional tools, Refer toSpecial Tools
3	Drive Motor Battery Coolant Inlet Hose Quick Disconnect Fitting
4	Drive Motor Battery Coolant Inlet Hose **Tip** Replace corroded hose clamps and brackets.

© Copyright Chevrolet. All rights reserved

Drive Motor Battery Coolant Outlet Hose Replacement

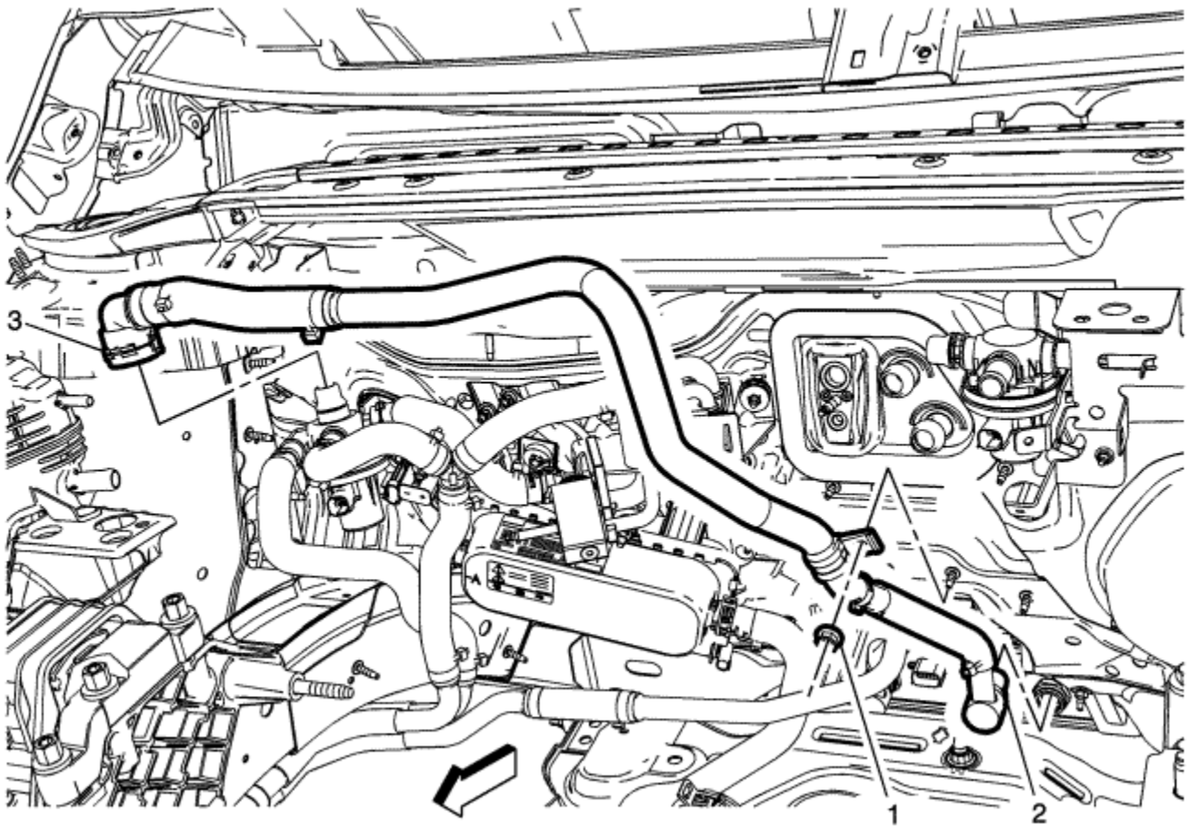

Callout	Component Name

Danger: Do not use a service jack in locations other than those specified to lift this vehicle. Lifting the vehicle with a jack in those other locations could cause the vehicle to slip off the jack and roll; this could cause injury or death.

Preliminary Procedure

1. Drain the drive motor battery cooling system. Refer to Drive Motor Battery Cooling System Draining and Filling
2. Remove the air conditioning compressor and evapoprator hose. Refer to Air Conditioning Compressor and Evaporator Hose Replacement
3. Reposition the air conditioning evaporator thermal expansion valve tubes from the TXV valve. Refer to Air Conditioning Evaporator Thermal Expansion Valve Tube Replacement
4. Remove the front exhaust pipe heat shield. Refer to Exhaust Pipe Heat Shield Replacement : Rear → Center → Front

1	Drive Motor Coolant Outlet Hose Bolt **Caution:** Refer to Fastener Caution in the Preface section. **Tighten** 9N·m (80 lb in)
2	Drive Motor Coolant Outlet Hose Quick Disconnect **Procedure** Disconnect the quick disconnect at the battery.
3	Drive Motor Coolant Outlet Hose Quick Disconnect **Procedure** Disconnect the quick disconnect at the drive motor battery coolant flow control valve. **Tip** Replace corroded hose clamps and brackets.

© Copyright Chevrolet. All rights reserved

Drive Motor Battery Radiator Inlet Hose Replacement

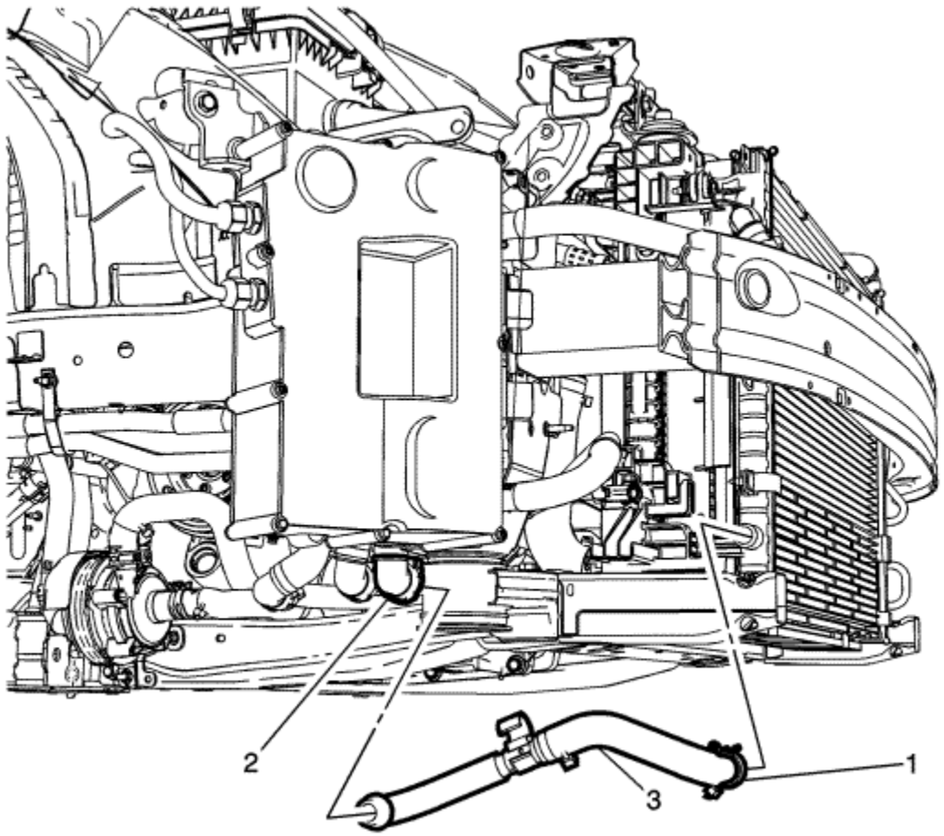

Callout	Component Name
Danger: Do not use a service jack in locations other than those specified to lift this vehicle. Lifting the vehicle with a jack in those other locations could cause the vehicle to slip off the jack and roll; this could cause injury or death. **Preliminary Procedure**	

1. Raise and support the vehicle. Refer to Lifting and Jacking the Vehicle
2. Remove the front wheelhouse front liner on passenger side. Refer to Front Wheelhouse Front Liner Replacement
3. Place a drain pan under the vehicle.

1	Drive Motor Battery Radiator Inlet Hose Clamp **Procedure** Reposition the drive motor battery radiator inlet hose clamp using *BO-38185* Hose Clamp Pliers **Special Tools** *BO-38185* Hose Clamp Pliers For equivalent regional tools, Refer toSpecial Tools
2	Drive Motor Battery Radiator Inlet Hose Quick Connect
3	Drive Motor Battery Radiator Inlet Hose **Tip** Unclip hose from drive motor generator control module cooling outlet hose. **Tip** Replace corroded hose clamps and brackets.

© Copyright Chevrolet. All rights reserved

Drive Motor Battery Radiator Outlet Hose Replacement

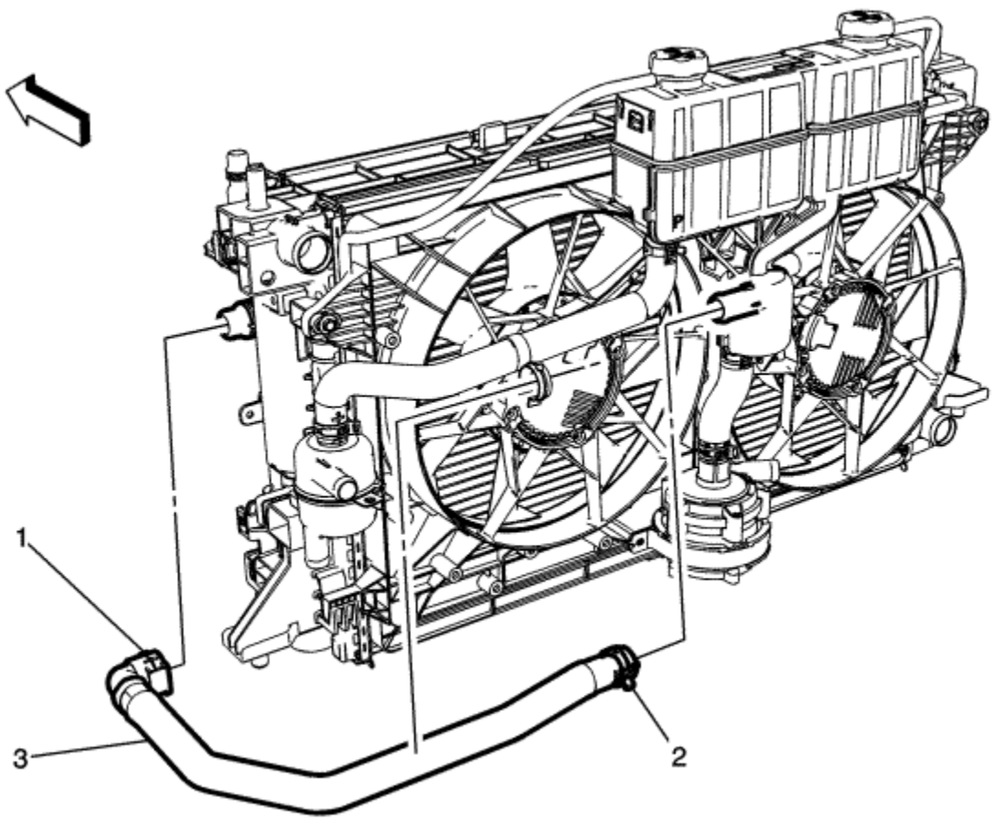

Callout	Component Name
Preliminary Procedure 1. Drain the coolant. Refer to Drive Motor Battery Cooling System Draining and Filling 2. Remove the front bumber fascia. Refer to Front Bumper Fascia Removal and Installation : Volt → Ampera	

1	Drive Motor Battery Radiator Outlet Hose Quick Connect
2	Drive Motor Battery Radiator Outlet Hose Clamp **Procedure** Reposition the drive motor battery radiator outlet hose clamp using *BO-38185* Hose Clamp Pliers **Special Tools** *BO-38185* Hose Clamp Pliers For equivalent regional tools, Refer toSpecial Tools
3	Drive Motor Battery Radiator Outlet Hose **Tip** Replace corroded hose clamps and brackets.

© Copyright Chevrolet. All rights reserved

Drive Motor Battery Coolant Cooler Inlet Hose Replacement

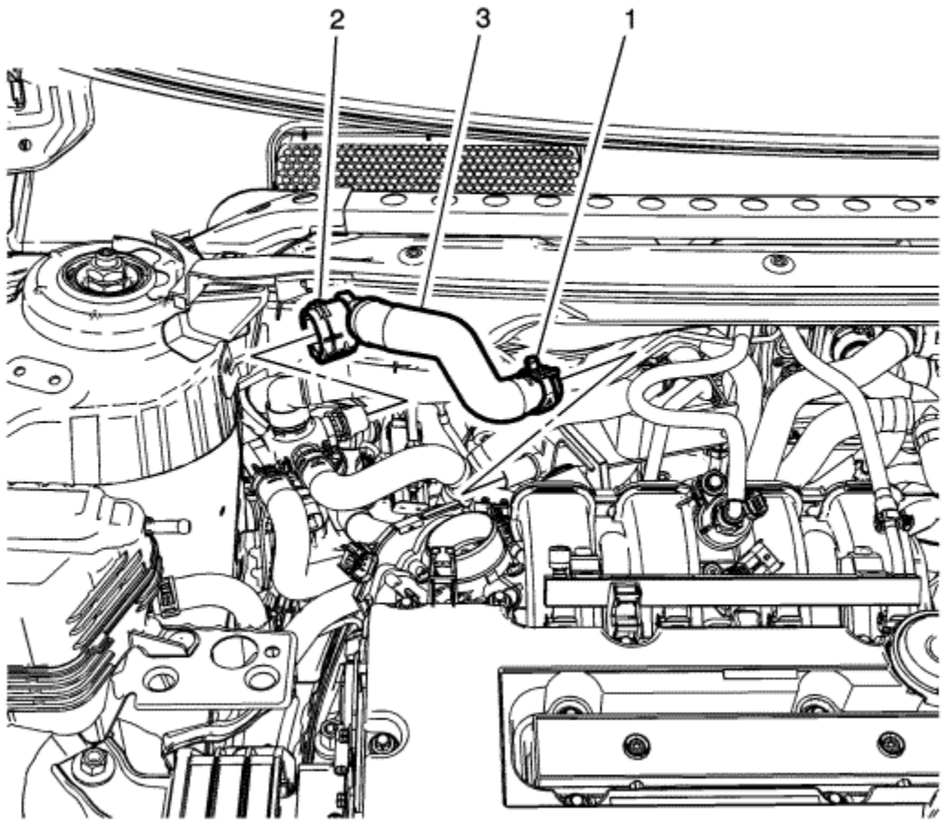

Callout	Component Name

Preliminary Procedure

1. Drain the coolant. Refer to Drive Motor Battery Cooling System Draining and Filling
2. Remove the air conditioning compressor and evaporator hose. Refer to Air Conditioning Compressor and Evaporator Hose Replacement
3. Reposition the air conditioning evaporator thermal expansion valve tubes from the TXV valve. Refer to Air Conditioning Evaporator Thermal Expansion Valve Tube

	Replacement
1	Drive Motor Battery Coolant Cooler Inlet Hose Clamp. **Procedure** Reposition the drive motor battery coolant cooler inlet hose clamp using *BO-38185* Hose Clamp Pliers **Special Tools** *BO-38185* Hose Clamp Pliers For equivalent regional tools, Refer to Special Tools
2	Drive Motor Battery Coolant Cooler Inlet Hose Quick Connect Fitting.
3	Drive Motor Battery Coolant Cooler Inlet Hose **Tip** Replace corroded hose clamps and brackets.

© Copyright Chevrolet. All rights reserved

Drive Motor Battery Coolant Cooler Inlet Hose Assembly Replacement

Special Tools

BO-38185 Hose Clamp Pliers

For equivalent regional tools, Refer toSpecial Tools

Removal Procedure

Note: Replace corroded hose clamps and brackets.

1. Drain the cooling system. Refer to Drive Motor Battery Cooling System Draining and Filling
2. Remove the air conditioning compressor and evaporator hose. Refer to Air Conditioning Compressor and Evaporator Hose Replacement
3. Reposition the air conditioning evaporator thermal expansion valve tubes from the TXV valve. Refer to Air Conditioning Evaporator Thermal Expansion Valve Tube Replacement

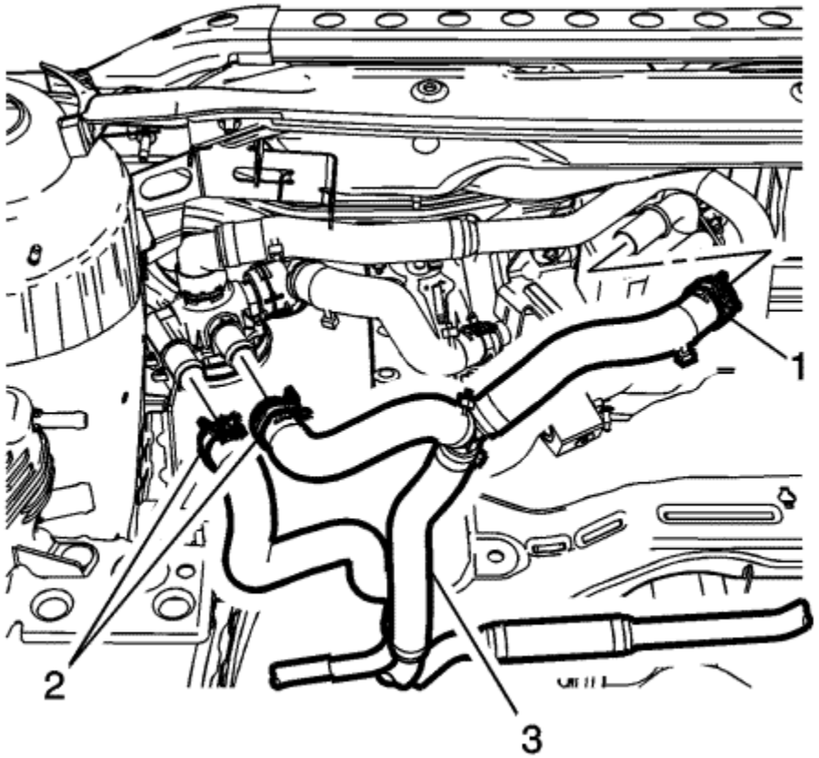

4. Remove the drive motor battery coolant cooler inlet hose assembly clamp (1) at the drive motor battery coolant cooler using *BO-38185* Hose Clamp Pliers .
5. Remove the drive motor battery coolant cooler inlet hose assembly clamps (2) at the drive motor battery coolant flow control valve using *BO-38185* Hose Clamp Pliers .
6. Remove the drive motor battery coolant cooler inlet hose assembly (3) from the drive motor battery coolant cooler and drive motor battery coolant flow control valve.
7. Remove the exhaust pipe heat shield front. Refer to Exhaust Pipe Heat Shield Replacement : Rear → Center → Front

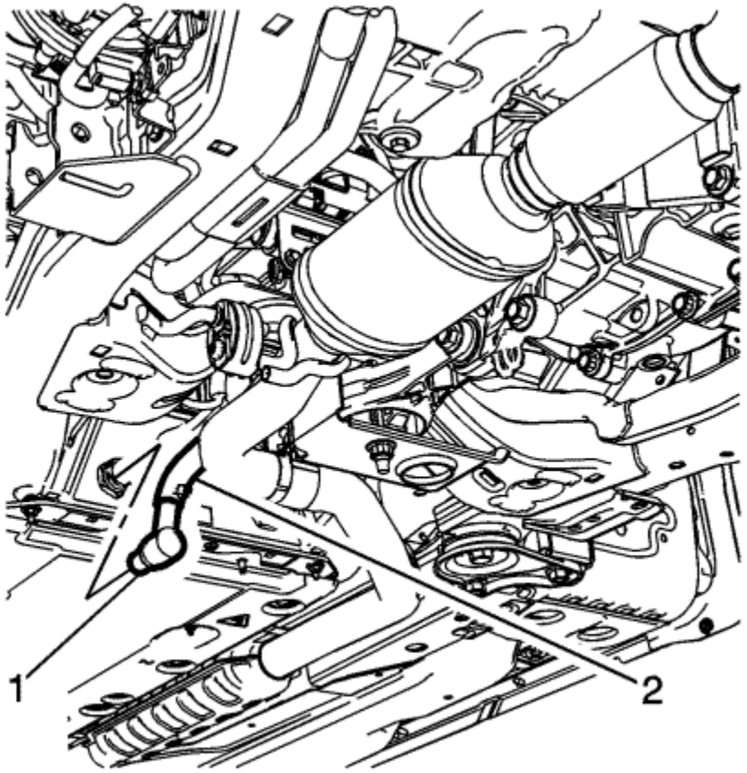

8. Disconnect the drive motor battery coolant cooler inlet hose assembly quick disconnect fitting (1) at the battery.
9. Remove the drive motor battery coolant cooler inlet hose assembly (2) from the battery.

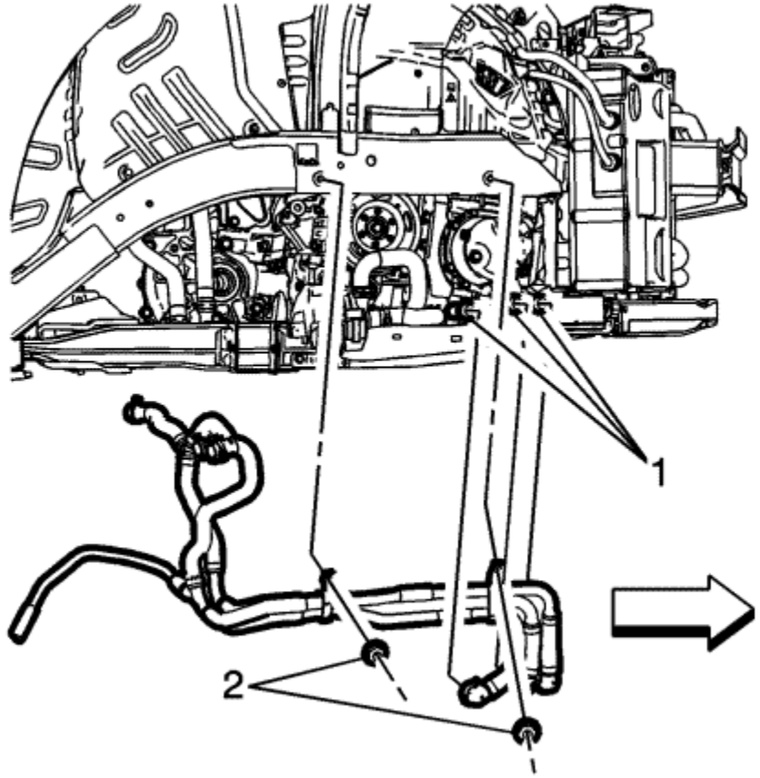

10. Disconnect the drive motor battery coolant cooler inlet hose assembly quick disconnect fitting (1) from drive motor battery inlet hose and drive motor battery coolant cooler outlet hose and drive motor battery coolant cooler inlet hose.
11. Remove the drive motor battery coolant cooler inlet hose assembly bracket nuts (2) from the body.
12. Remove the drive motor battery coolant cooler inlet hose from the vehicle.

Installation Procedure

1. Install the drive motor battery coolant cooler inlet hose from the vehicle.

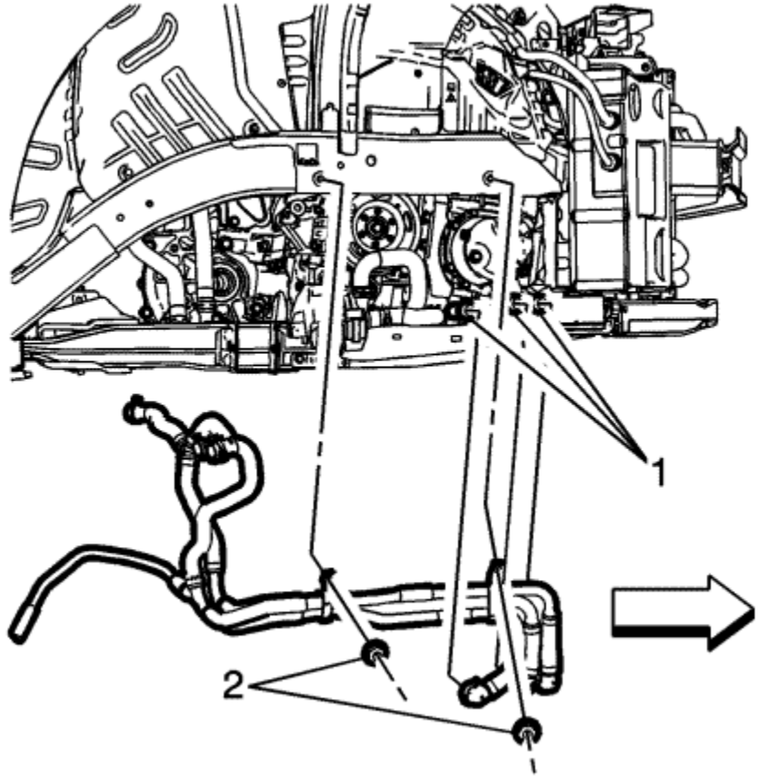

2. Install the drive motor battery coolant cooler inlet hose assembly bracket nuts (2) to the body.
3. Connect the drive motor battery coolant cooler inlet hose assembly quick disconnect fitting (1) to the drive motor battery inlet hose and drive motor battery coolant cooler outlet hose and drive motor battery coolant cooler inlet hose.

   Caution: Refer to Fastener Caution in the Preface section.

4. Install the drive motor battery coolant cooler inlet hose assembly (2) to the battery and tighten to **9 N·m (80 lb in)**.

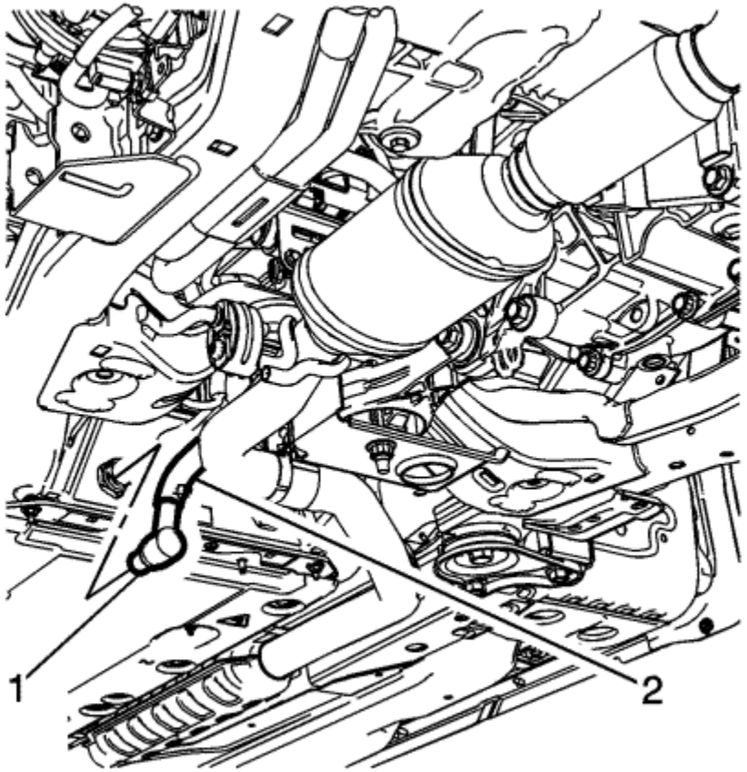

5. Connect the drive motor battery coolant cooler inlet hose assembly quick disconnect fitting (1) at the battery.
6. Install the exhaust pipe heat shield front. Refer to Exhaust Pipe Heat Shield Replacement : Rear → Center → Front

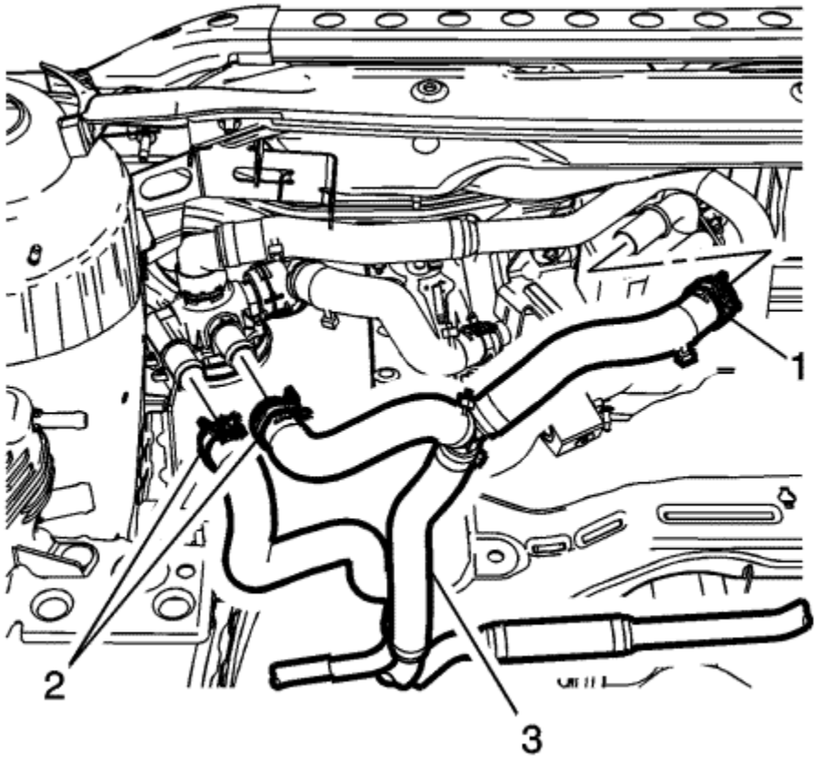

7. Install the drive motor battery coolant cooler inlet hose assembly (3) to the drive motor battery coolant cooler and drive motor battery coolant flow control valve.
8. Install the drive motor battery coolant cooler inlet hose assembly clamps (2) at the drive motor battery coolant flow control valve using *BO-38185* Hose Clamp Pliers .
9. Install the drive motor battery coolant cooler inlet hose assembly clamp (1) at the drive motor battery coolant cooler using *BO-38185* Hose Clamp Pliers.
10. Reposition the air conditioning evaporator thermal expansion valve tubes from the TXV valve. Refer to Air Conditioning Evaporator Thermal Expansion Valve Tube Replacement
11. Install the air conditioning compressor and evaporator hose. Refer to Air Conditioning Compressor and Evaporator Hose Replacement
12. Fill the cooling system. Refer to Cooling System Draining and Filling

© Copyright Chevrolet. All rights reserved

Hybrid/EV Battery Pack Coolant Control Solenoid Valve Learn

Hybrid/EV Battery Pack Coolant Control Solenoid Valve Learn

The Hybrid/EV Battery Pack Coolant Control Solenoid Valve Learn procedure must be completed when the following components are replaced:

- Hybrid/EV Powertrain Control Module 2
- Hybrid/EV Battery Pack Coolant Control Solenoid Valve

The Hybrid/EV Battery Pack Coolant Control Solenoid Valve Learn procedure can be completed with a scan tool using the following steps:

1. Install the scan tool to the data link connector.
2. Vehicle in Service Mode, engine OFF.
3. Select Hybrid/EV Battery Pack Coolant Control Solenoid Valve Learn in the Hybrid/EV Powertrain Control Module 2 Control Functions list.
4. Follow the scan tool directions to complete the procedure.
5. Clear any DTCs that may be set.

&#169© Copyright Chevrolet. All rights reserved

Drive Motor Battery Cooling Description

Cooling System Description and Operation

This vehicle is equipped with three fully independent cooling systems. The power electronics cooling system is dedicated to cooling the battery charger and the power inverter module. The battery cooling system is dedicated to cooling and heating the high-voltage battery. The engine cooling system is dedicated to cooling the engine and providing heat to the passenger compartment.

Battery Cooling System Description and Operation

The battery cooling system uses a radiator, two 12 volt pulse width modulated (PWM) radiator fans, a 12 volt coolant pump, a refrigerant/coolant heat exchanger (chiller) and a coolant flow control valve to cool down the high-voltage battery. There is also a high-voltage heater inside the battery to heat the coolant entering the battery when needed. The Vehicle Integration Control Module (VICM) monitors the battery coolant temperature, battery cell temperature, refrigerant temperature and refrigerant pressure. The VICM determines how much battery cooling or heating is required and turns on the coolant pump, positions the coolant flow control valve and depending on what is required, will signal the Engine Control Module (ECM) to operate the radiator fans, request the A/C Compressor Module (ACCM) to turn on the high- voltage A/C compressor or turn on the high-voltage heater. The battery cooling system could be activated when the vehicle is on and during charging.

The battery cooling system circulates a pre-mixed Dexcool® which is a 50/50 mixture of Dexcool and deionised water. Deionised water is required for high-voltage isolation and to prevent corrosion from affecting heat sink performance. Always use pre-mixed coolant and never use tap water in the battery coolant system.

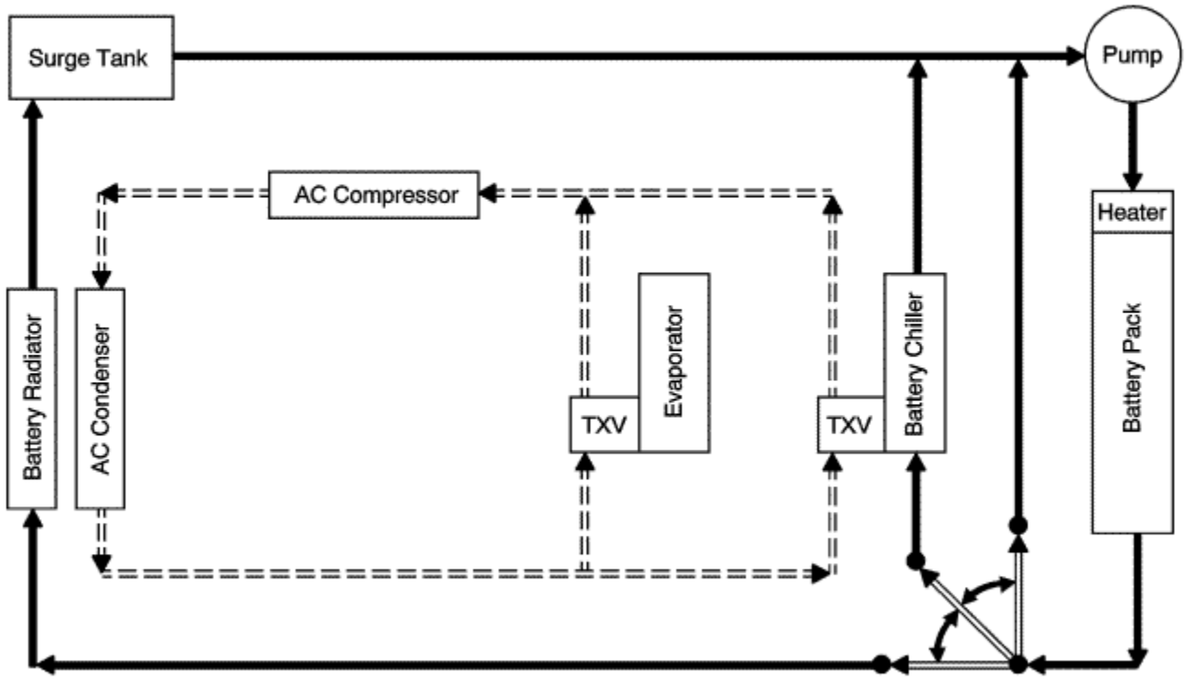

© Copyright Chevrolet. All rights reserved

Drive Motor Generator Control Module Cooling System Description and Operation

Cooling System Description and Operation

This vehicle is equipped with three fully independent cooling systems. The power electronics cooling system is dedicated to cooling the battery charger and the power inverter module. The battery cooling system is dedicated to cooling and heating the high-voltage battery. The engine cooling system is dedicated to cooling the engine and providing heat to the passenger compartment.

Power Electronics Cooling System Description and Operation

The power electronics cooling system uses a radiator, two 12 volt pulse width modulated (PWM) radiator fans, a 12 volt coolant pump and to cool down the Drive Motor Generator Power Inverter Module (PIM) and the Drive Motor Battery Charger. The Vehicle Integration Control Module (VICM) activates the coolant pump and monitors a temperature sensor in the power electronics radiator. The VICM also signals the Engine Control Module (ECM) to operate the radiator fans in response to the power electronics cooling system temperature. The coolant pump will be activated when the vehicle is on and during charging. The power electronics radiator is combined with the battery radiator to form one radiator.

The power electronics cooling system circulates a pre-mixed Dexcool® which is a 50/50 mixture of Dexcool and de-ionised water. Deionised water is required for high-voltage isolation and to prevent corrosion from affecting heat sink performance. Always use pre-mixed coolant and never use tap water in the power electronics coolant system.

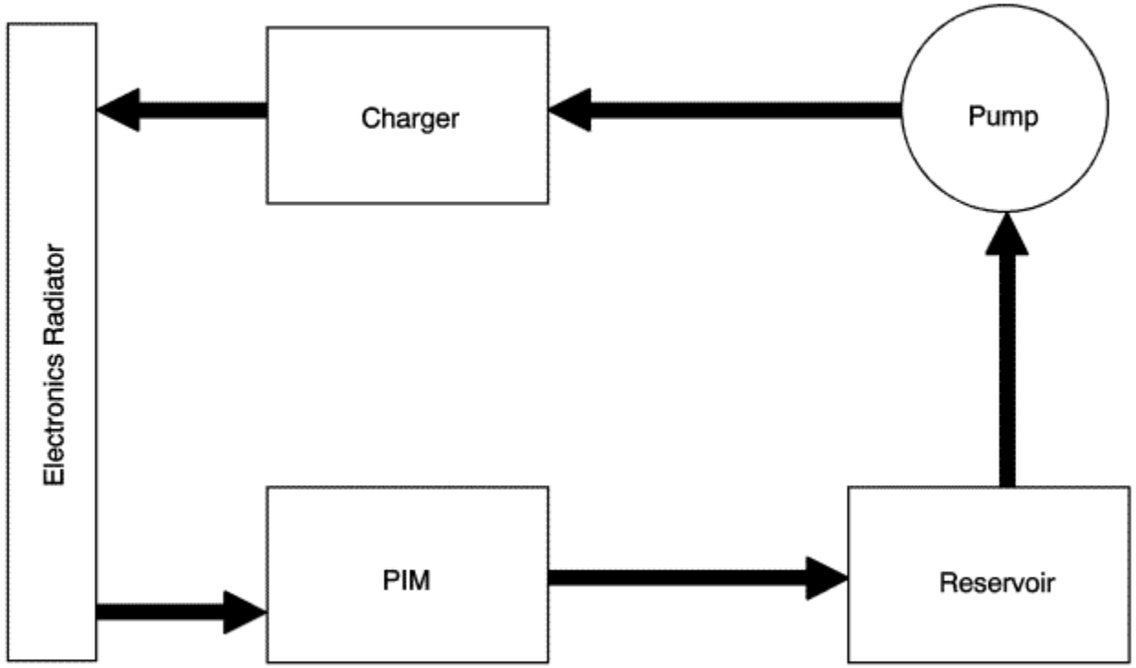

© Copyright Chevrolet. All rights reserved

Hybrid Cooling System Description and Operation

This vehicle is equipped with three fully independent cooling systems. The hybrid/EV electronics cooling system is dedicated to cooling the battery charger and the drive motor generator power inverter module. The hybrid/EV battery pack cooling system is dedicated to cooling and heating the high-voltage hybrid/EV battery. The engine cooling system is dedicated to cooling the engine and providing heat to the passenger compartment.

Hybrid Electronics Cooling System Description and Operation

The primary purpose of the hybrid/EV electronics cooling loop is to cool the drive motor generator power inverter module, while propulsion is enabled, and the on-board charge module, when it is plugged in. The hybrid/EV electronics cooling system uses the hybrid/EV electronics radiator, the two 12 V pulse width modulated (PWM) radiator fans, a 12 V hybrid/EV electronics coolant pump to circulate coolant through the drive motor generator power inverter module and the drive motor battery charger. The hybrid/EV powertrain control module 2 activates the hybrid/EV electronics coolant pump and monitors a temperature sensor in the hybrid/EV electronics radiator. The hybrid/EV powertrain control module 2 monitors the hybrid/EV electronics cooling system temperature to determine when to operate the radiator fans. The hybrid/EV electronics coolant pump will be activated when the vehicle is on and during charging. The hybrid/EV electronics radiator is combined with the battery pack cooling system radiator to form one radiator assembly. The hybrid/EV electronics coolant pump and radiator cooling fans will also be enabled during an after-run event which is determined by coolant loop temperature.

The hybrid/EV electronics cooling system circulates a pre-mixed DEXCOOL® which is a 50/50 mixture of DEXCOOL® and deionised water. Deionised water is required for high-voltage isolation and to prevent corrosion from affecting heat sink performance. Always use pre-mixed coolant and never use tap water in the hybrid/EV electronics coolant system.

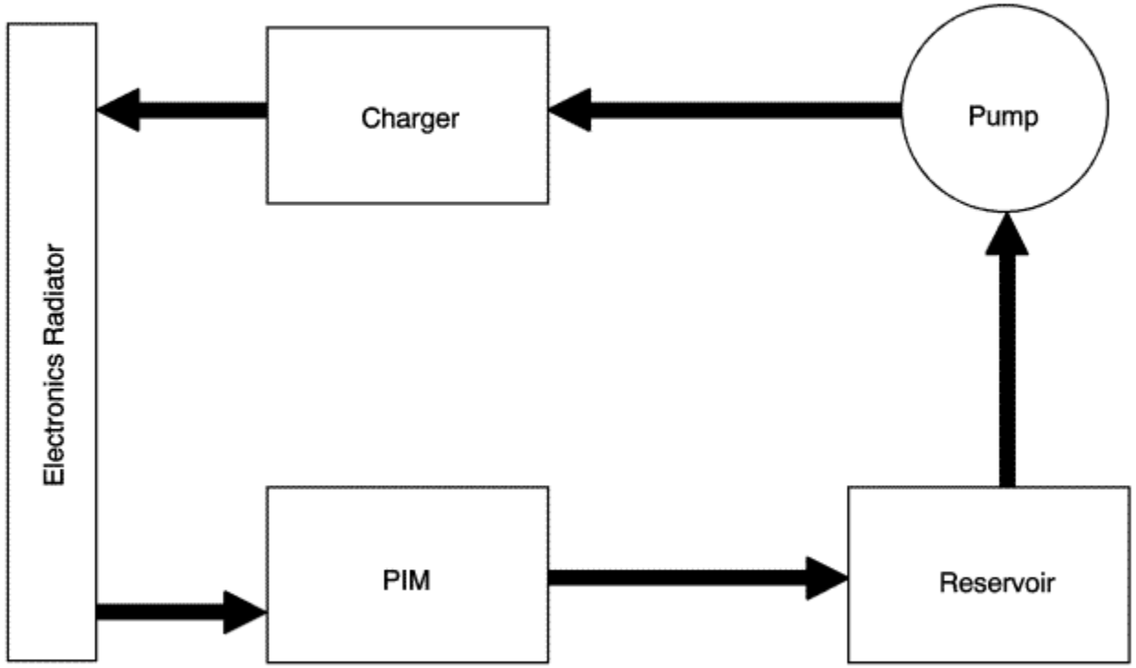

Hybrid/EV Battery Pack Cooling System Description and Operation

The energy storage system cooling system uses a battery radiator, the two 12 V pulse width modulated (PWM) radiator fans, a 12 V hybrid/EV battery pack coolant pump, a refrigerant/coolant heat exchanger (chiller), the electric A/C compressor motor control module assembly, refrigerant pressure and temperature sensors, ambient air temperature sensor and a hybrid/EV battery pack coolant flow control valve to cool down the high voltage hybrid/EV battery. There is also a high-voltage heater inside the hybrid/EV battery to heat the coolant entering the hybrid/EV battery when needed. The hybrid/EV powertrain control module 2 monitors the hybrid/EV battery coolant temperature, hybrid/EV battery cell temperature, refrigerant temperature and refrigerant pressure. The hybrid/EV powertrain control module 2 determines how much hybrid/EV battery cooling or heating is required and turns on the hybrid/EV battery pack coolant pump, positions the hybrid/EV battery pack coolant flow control valve and depending on what is required will operate the radiator fans, request the A/C Compressor Module to turn on the high-voltage A/C compressor or turn on the high voltage hybrid/EV battery pack heater. The hybrid/EV battery pack cooling system could be activated when the vehicle is operating, during charging, or when the vehicle is OFF and maintaining the hybrid/EV battery pack temperature. Refer to Automatic HVAC Description and Operation .

The Hybrid/EV Battery Pack Coolant Control Valve is used to manage the flow of coolant circulating through the hybrid/EV battery temperature control system. The valve has one fluid input port and three fluid output ports, identified as Radiator, Bypass and Chiller. The valve has an internal valve body that is rotated by the valve motor to different positions to control which fluid ports are connected. The valve operates through 90 degrees. When the valve is directing coolant to the Radiator port, coolant is routed through

a front-mounted heat exchanger. When the valve is in the Bypass position, coolant is routed through the battery pack without passing through additional heat exchangers. When the valve is in the Chiller position coolant is routed through a heat exchanger that allows the A/C cooling system to reduce coolant temperature. The valve can be moved to several intermediate positions between Bypass and Chiller, for blended cooling of the hybrid/EV battery pack coolant for optimum efficiency.

The valve provides position feedback to the hybrid/EV powertrain control module 2 based on a potentiometer in the valve. The hybrid/EV powertrain control module 2 uses this feedback to monitor the valve position. Different valve positions correspond to different resistance values. When the ignition is first turned on the hybrid/EV powertrain control module 2 determines and records the sensor values corresponding to the end-stop positions of the valve by moving the valve to an end-stop and back to its original position. This is referred to as the hybrid/EV powertrain control module 2 "diagnostic learn" of the valve. This provides a valve shaft breakage test and allows the hybrid/EV powertrain control module 2 to "learn" the position feedback value that corresponds to that end-stop. The end-stop that is used at each ignition key cycle alternates between each end-stop.

The hybrid/EV battery pack cooling system circulates a pre-mixed DEXCOOL® which is a 50/50 mixture of DEXCOOL® and deionised water. Deionised water is required for high-voltage isolation and to prevent corrosion from affecting heat sink performance. Always use pre-mixed coolant and never use tap water in the battery coolant system.

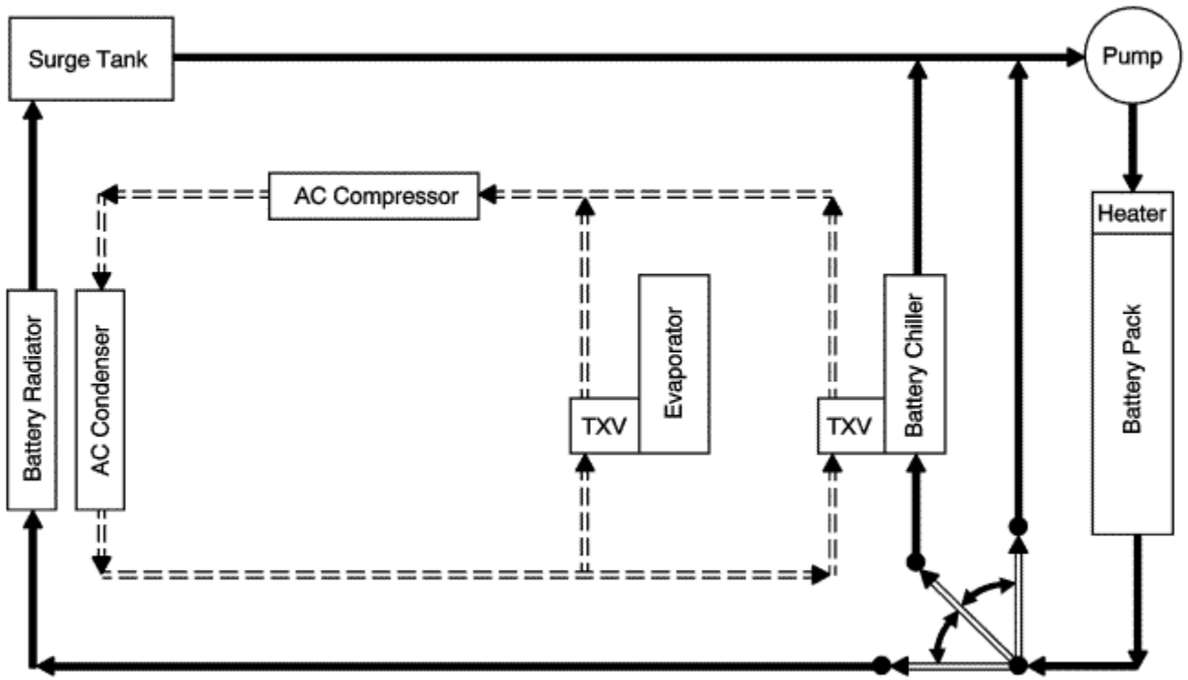

Passenger Compartment Heater System Description and Operation

Passenger Compartment Heater Coolant Control Valve and Auxiliary Heater Coolant Pump

The passenger compartment heater coolant control valve is also controlled by hybrid/EV powertrain control module 2 to assist in regulating passenger compartment comfort based on presence or absence of engine heat. Refer to Automatic HVAC Description and Operation .

The passenger compartment heater system uses the engine radiator, the two 12 V pulse width modulated (PWM) radiator fans, a 12 V auxiliary heater coolant pump, a passenger compartment heater coolant control valve, a high- voltage coolant heater control module and a heater core. The hybrid/EV powertrain control module 2 operates the two radiator fans in response to engine temperature.

The passenger compartment heater coolant control valve has two positions. When commanded in bypass mode, as when the engine is OFF, the passenger compartment heater coolant control valve separates the engine and the cabin heater control module coolant loops to prevent heat generated by the cabin heater control module for passenger compartment heating from dissipating into the engine coolant loop. After the engine starts up and is warmed up, excess engine heat will allowed to assist the cabin heater control module in heating the passenger compartment; the passenger compartment heater coolant control valve is commanded to link mode and the two coolant loops are connected.

The HVAC control module turns on the auxiliary heater coolant pump and monitors the temperature sensors in the passenger compartment and coolant loop to determine if the high-voltage cabin heater control module is needed. Passenger compartment heat is provided by air flowing through the heater core. The heater core is heated by coolant from the engine, the high- voltage cabin heater control module or both. The hybrid/EV powertrain control module 2 will command the position of the passenger compartment heater coolant control valve to either isolate the passenger compartment heater loop from the engine coolant loop or link the two loops together to maximize efficiency depending on the passenger compartment heat requirements. When operating the vehicle in cold temperatures, the engine may run for short periods to assist in maximising heat efficiency to the passenger compartment depending on the outside temperature and the passenger compartment heat requirements.

The hybrid/EV powertrain control module 2 will command the passenger compartment heater coolant control valve into bypass mode when the module goes to sleep, at controller wake-up, and during other times except:

- During learn (after extended loss of 12 V power to the controller)
- When the scan tool is sending a command.
- If the valve is stuck in an intermediate position (between two end positions) due to failure or debris.

The passenger compartment heater cooling system circulates a 50/50 mixture of DEXCOOL® and distilled water.

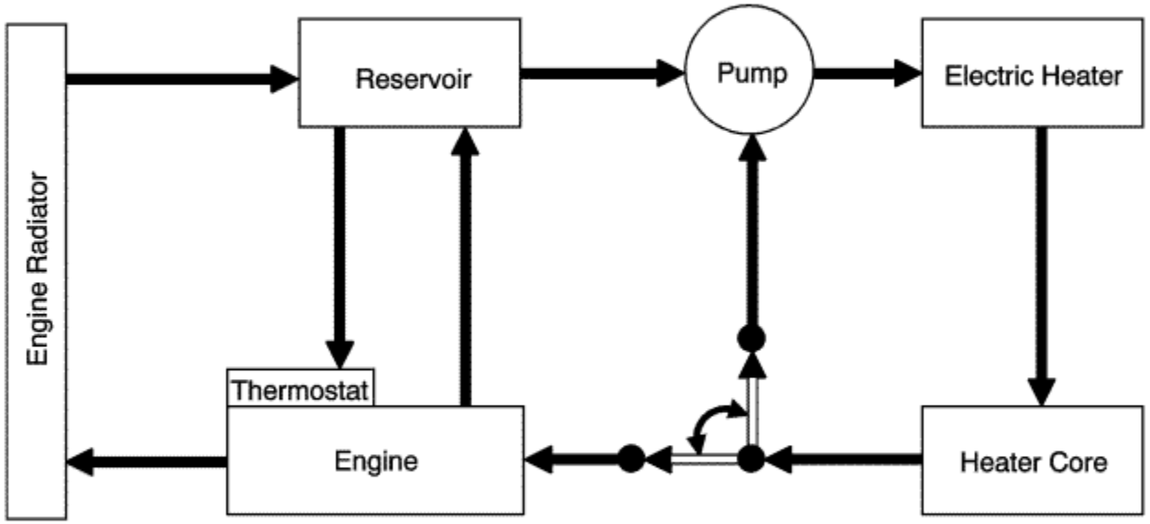

14 V Power Module Cooling

The 14 V power module is air-cooled. Refer to Accessory Power Module Description and Operation. The 14 V power module fan is powered by a brushless DC motor and has operating speeds between 0-3,900 RPM. The 14 V power module fan is serviced separately from 14 V power module assembly. The hybrid/EV powertrain control module 2 will command the 14 V power module fan while in RUN mode.

&#169© Copyright Chevrolet. All rights reserved

Special Tools

Illustration	Tool Number/ Description
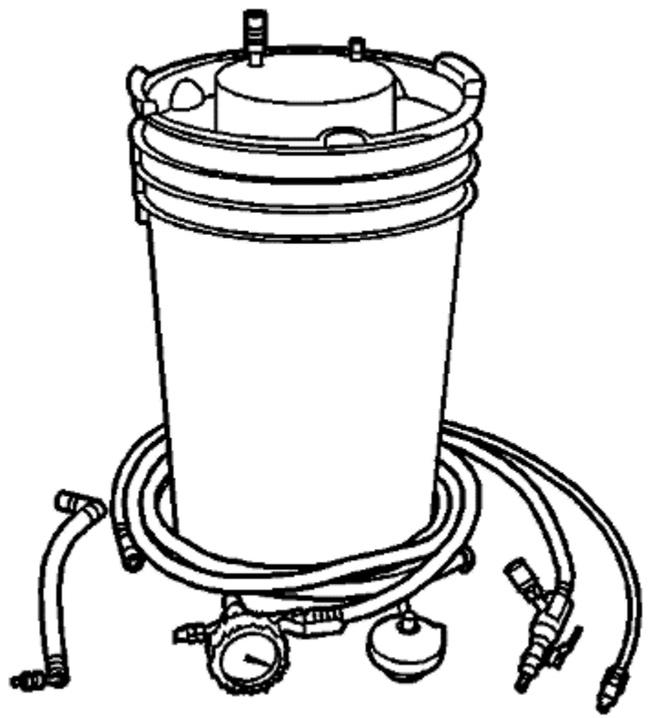	GE 47716 Vac-N-Fill Coolant Refill Tool
	EN 24460-A

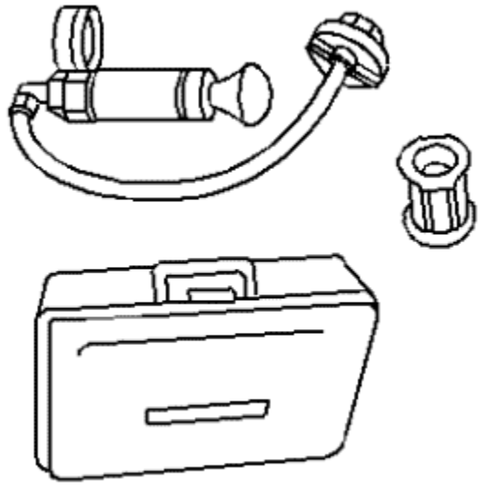	J 24460-A Cooling System Pressure Tester
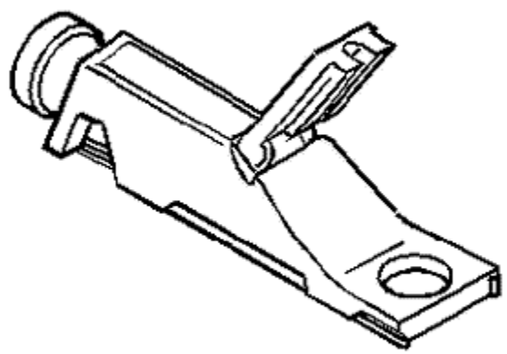	GE 26568 J 26568 Coolant and Battery Tester

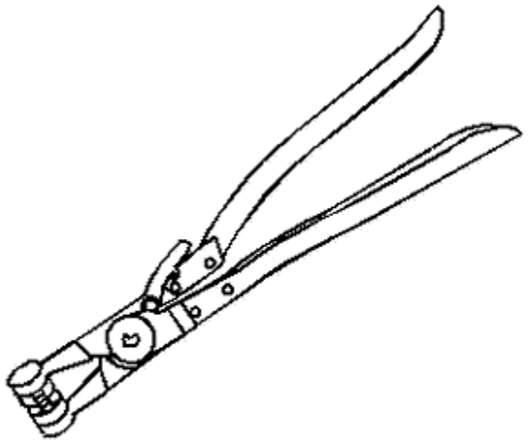	BO 38185 J 38185 Hose Clamp Pliers
	GE 46143 J 46143 Cooling System Adapter
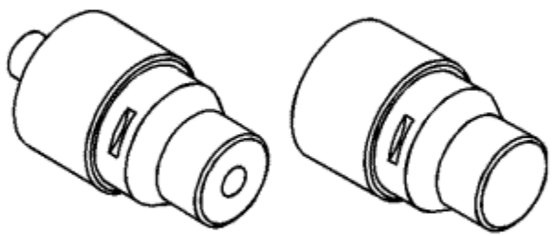	GE-50385 Battery Pack Coolant Passage Pressure Test Adapter

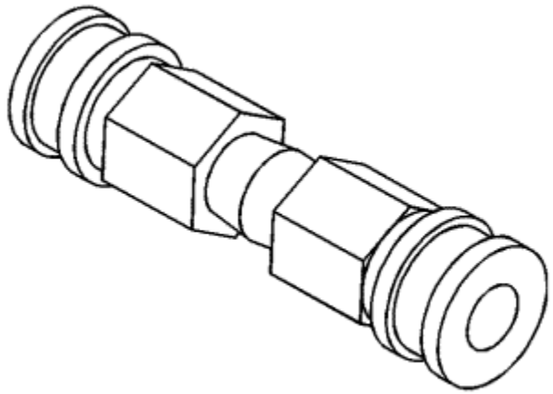	GE-50389 Coolant Pressure Test Quick Connecter

© Copyright Chevrolet. All rights reserved

Hybrid Energy Storage Schematics

Figure 1: Battery Energy Control Module Power, Earth and Data Communication
Figure 2: Internal Battery Communication
Figure 3: High-Voltage Interlock Loop - Main
Figure 4: High-Voltage Interlock Loop - Charging
Figure 5: High-Voltage Contactors - Control
Figure 6: High-Voltage Contactors - High Voltage Positive
Figure 7: Hybrid/EV Battery Section 1
Figure 8: Hybrid/EV Battery Section 2
Figure 9: Hybrid/EV Battery Section 3
Figure 10: High-Voltage Contactors - High Voltage Negative

© Copyright Chevrolet. All rights reserved

High Voltage Safety

Danger: High voltage enabling and disabling shall be only performed by High Voltage Qualified Technicians. The procedures for high-voltage enabling/disabling can be found in the service instructions and must be strictly followed at all times. The usage of the Protocol High Voltage Disabling/Enabling is mandatory. The High-Voltage Qualified Technician is responsible for the adherence to the manufacturer's service instructions as well as current national legal regulations.

Failure to follow the procedures exactly as written may result in serious injury or death.

Questions regarding training can be answered by your national training centre.

Danger: Follow the safety regulations for hybrid/electric vehicles. The High-Voltage Qualified Technician is responsible for the adherence to the manufacturer's service instructions as well as current national legal regulations. Failure to follow the regulations exactly as written may result in serious injury or death.

Danger: High-voltage circuits should only be tested using the EL-50774 Low/High Resistance Meter and test leads with at least a CAT III rating or isolated test adapters such as EL-50690. Failure to follow the procedures exactly as written may result in serious injury or death.

Danger: This vehicle is equipped with a high-voltage battery that is completely isolated from the chassis earth. Never utilise AC powered test equipment to probe the high voltage system. Serious injury, death and component damage could occur if the high-voltage system is earthed through the electric utility.

Failure to follow the procedure exactly as written may result in serious injury or death.

Danger: Any hybrid/EV battery pack replacement shall be performed by High-Voltage Qualified Technicians only. The replacement procedure can be found in the service instruction and must be strictly followed at all times. The High-Voltage Qualified Technician is responsible for adherence to the manufacturer's service instructions as well as current national legal regulations. If the hybrid/EV battery pack needs to be replaced contact the Technical Assistance Centre for further instructions prior to removal of the battery pack.

Special Tools

- *EL-50209* High-Voltage Terminal Cover
- *EL-48900* HEV Safety Kit

For equivalent regional tools, refer to Special Tools .

Precautions when Performing Service or Inspections

- Always verify that the high voltage has been disabled before working on or around high-voltage components, wires, cables or harnesses.
- Remove all metal objects such as rings and watches.
- The *EL-48900* HEV safety kit contains safety cones. Place the safety cones around the vehicle to alert other technicians that you are working on the high-voltage system.
- Remove all keyless entry transmitters and the manual service disconnect from the vehicle and secure in a place outside the vehicle.
- Always wear certified and tested high-voltage insulation gloves when inspecting or testing any high-voltage wires and components.
- Use the "One Hand" rule:
  - Work with only one hand whenever possible.
  - Keep the other hand behind your back.
- DO NOT carry any metal objects such as a mechanical pencil or a measuring tape that could fall and cause a short circuit.
- After removing any high-voltage wires, protect and insulate the terminal ends immediately with the *EL-50209* high- voltage terminal cover and UL® Listed or equivalent insulation tape rated at a minimum of 600 V.
- Always tighten the high-voltage terminal fasteners to the specified torque. Insufficient or excessive torque will cause malfunctions or damage.
- After finishing work on the high-voltage systems and before reinstalling the high-voltage manual disconnect, inspect for the following:
  - Verify high-voltage system integrity and that all connectors are installed.
  - Verify that all tools or loose components have been removed.

Labels for Components, Wire Harness and Connectors

The wire harnesses and cables for high-voltage circuits are encased in an orange coloured covering. In addition, high-voltage components such as the Energy Storage System and high-voltage cables are affixed with "High-Voltage" red danger (1) and orange warning (2) labels.

High-Voltage insulation Glove Inspection Procedure

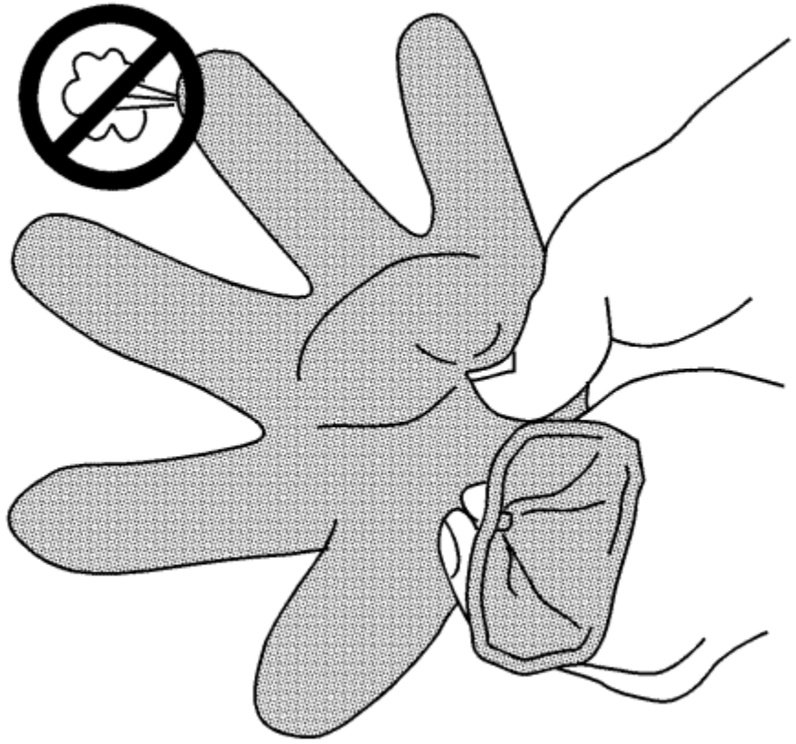

The following procedure visually and functionally inspects the insulation gloves to be used while performing service on high- voltage systems. This inspection procedure should be performed prior to any procedure that requires the use of class "0" insulation gloves rated at 1,000 V.

1. Remove glove from leather protector.
2. Inflate glove and seal opening. Pinch the opening closed tightly to prevent any air loss.
3. Press glove to increase pressure.
4. Inspect for the following conditions:
   - pin holes
   - air leaks
   - wear, tears or abrasions
   - damp or wet material
   - certified up-to-date

   If any of the above conditions are met, do not use the gloves.

&#169© Copyright Chevrolet. All rights reserved

High Voltage Disabling

Table 1: High-Voltage System Disabling Protocol

Special Tools

EL-48900 HEV Safety Kit

EL-50554-1 14 V Power Inverter Assurance Harness

EL-50554-2 Charger Assurance Harness

EL-50774 Low/High-Resistance Meter

For equivalent regional tools, refer to Special Tools .

The High-Voltage Disabling procedure will perform the following tasks:

- Identify how to disable high voltage.
- Identify how to test for the presence of high voltage.
- Identify conditions under which high voltage is always present and personal protection equipment (PPE) and proper procedures must be followed.

Danger: High voltage enabling and disabling shall be only performed by High Voltage Qualified Technicians. The procedures for high-voltage enabling/disabling can be found in the service instructions and must be strictly followed at all times. The usage of the Protocol High Voltage Disabling/Enabling is mandatory. The High-Voltage Qualified Technician is responsible for the adherence to the manufacturer's service instructions as well as current national legal regulations.

Failure to follow the procedures exactly as written may result in serious injury or death.

Questions regarding training can be answered by your national training centre.

Danger: Follow the safety regulations for hybrid/electric vehicles. The High-Voltage Qualified Technician is responsible for the adherence to the manufacturer's service instructions as well as current national legal regulations. Failure to follow the regulations exactly as written may result in serious injury or death.

Danger: Any hybrid/EV battery pack replacement shall be performed by High-Voltage Qualified Technicians only. The replacement procedure can be found in the service instruction and must be strictly followed at all times. The High-Voltage Qualified Technician is responsible for adherence to the manufacturer's service instructions as well as current national legal regulations. If the hybrid/EV battery pack needs to be replaced contact the Technical Assistance Centre for further instructions prior to removal of the

battery pack.

Note: Print this form. Perform the High-Voltage Disabling procedures listed. Check off individual steps when completed.

Note: A suitable hoist to safely lift the vehicle up is required to perform the disabling procedure.

High-Voltage System Disabling Protocol

Name of certified person performing the high-voltage procedure:			
VIN		Licence Plate	

	Procedure Description	Step Completed
1	Review the high-voltage safety information. Refer to High Voltage Safety .	O
2	Vehicle OFF. Post red HIGH-VOLTAGE ENABLED sign clearly visible on the vehicle.	O
3	Ensure the area around the vehicle is restricted and marked as such via warning cones, cordon tape or chain. Ensure all personnel not tasked with enabling the High-Voltage System have cleared the area.	O
4	Disconnect and remove all 12 V battery chargers and the AC Charge Cable from the X98 Hybrid Battery Charger Receptacle.	O
5	Remove all keyless entry transmitters from the vehicle and secure in a place outside the vehicle.	O
6	Attempt to start the vehicle with the Ignition Mode Switch. If the vehicle enters Propulsion System Active mode or the engine starts, locate and remove all keyless entry transmitters from within the vehicle and return to step 5.	O
7	Secure the vehicle from rolling, set transmission selector to park (P) position.	O
8	**Note:** The 12 V battery must be disconnected to ensure proper test results. Disconnect the 12 V battery. Refer to Battery Negative Cable Disconnection and Connection .	O
9	Remove the S15 manual service disconnect (1). Place the manual service disconnect in a secure place outside the vehicle.	O
10	Cover the exposed high-voltage opening with insulation tape rated at a minimum of 600 V or equivalent.	O
11	Wait 5 minutes before continuing, to allow the high-voltage capacitors to discharge.	O
12	Verify the *EL-50554* voltage disable assurance test harness using the EL-50774, verify that the EL-50554-1 and EL-50554-2 cables measure less than 1 Ω at the following points: • High-voltage DC (-360 V) negative terminal B to the High-voltage DC (-360 V) negative terminal. • High-voltage DC (+360 V) positive terminal A to the High-voltage DC (+360 V) positive terminal. If the test result was greater than the specified range, repair or replace the EL-50554-1 or EL-50554-2 and repeat all measurements.	O
13	Using the EL-50774, verify that the EL-50554-1 and EL-50554-2 have infinite resistance between the High-voltage DC (+360 V) positive terminal A to High-voltage DC (-360 V) negative terminal B.	O

	If the test result was less than the specified range, repair or replace the EL-50554-1 or EL-50554-2 and repeat all measurements.	
14	Verify the EL-50554-1 and EL-50554-2 High-voltage DC (-360 V) negative terminal B and the High-voltage DC (+360 V) positive terminal A have the proper terminal tension. Refer to Testing for Proper Terminal Contact. Testing for Intermittent Conditions and Poor Connections If a poor connection is found, repair or replace the EL-50554-1 or EL-50554-2 and repeat all measurements.	O
15	Remove the T6 power inverter module cover. Refer to Drive Motor Generator Power Inverter Module Cover Replacement	O
16	**Note:** Wear your High-Voltage Insulation gloves and face shield until you have determined that a high-voltage exposure risk is no longer present. Disconnect the X3 harness connector at the T6 power inverter module.	O
17	**Note:** The following tests must be performed using a EL-50774 set to the DC voltage setting. Performing the following tests with the EL-50774 not set on the DC voltage setting will result in inaccurate test results. **Note:** A 9 V DC battery can be used to test the EL-50774. Test the EL-50774 by measuring a 12 V battery. If the EL-50774 does not properly measure a 12 V battery, repair or replace the EL-50774 and repeat all voltage measurements.	O
18	**Note:** 5 minutes must have elapsed since removing the manual service disconnect before continuing to allow the high-voltage capacitors to discharge and ensure proper test results. Verify that the voltage has been disabled at the T6 power inverter module. Using the EL-50774, verify the voltage measures less than 3 V at the following points: • High-voltage DC (-360 V) negative terminal B to vehicle chassis earth. • High-voltage DC (+360 V) positive terminal A to vehicle chassis earth. • High-voltage DC (+360 V) positive terminal A and high- voltage DC (-360 V) negative terminal B. If the test result was greater than 3 V, leave the EL-50774 connected to the terminals until the voltage drops below 3 V to allow the high-voltage capacitors to discharge. Continue to the next step once the voltage is below 3 V.	O
19	Verify that the voltage has been disabled at the X3 harness connector at the T6 power inverter module. Using the EL-50774, verify the voltage measures less than 3 V at the following points: • High-voltage DC (-360 V) negative terminal B to vehicle chassis earth. • High-voltage DC (+360 V) positive terminal A to vehicle chassis earth. • High-voltage DC (+360 V) positive terminal A and high- voltage DC (-360 V) negative terminal B. If the test result was greater than 3 V, there is a stuck closed contactor and a loss of isolation within the A4 battery pack assembly. Refer to Hybrid\EV Battery Voltage Present .	O
20	Remove the 3 catalytic converter nuts . Disconnect catalytic converter from the exhaust manifold. Move and secure the exhaust to one side. Refer to Catalytic Converter Replacement .	O
21	Remove the front exhaust pipe heat shield. Refer to Exhaust Pipe Heat Shield Replacement : Rear → Center → Front .	O

22	Disconnect the X1 and X2 harness connectors at the A28 hybrid battery contactor assembly.	O
23	Disconnect the high-voltage interlock harness connector listed below at the A28 hybrid battery contactor assembly. • F118 hybrid battery pack connector jumper connector. • X6 14 V power module jumper connector. • X7 battery charger jumper connector.	O
24	Disconnect the X4 harness connector at the A28 hybrid battery contactor assembly.	O
25	Connect the EL-50554-1 to the A28 hybrid battery contactor assembly. Using the EL-50774, verify the voltage measures less than 3 V at the following points: • High-voltage DC (-360 V) negative terminal B to vehicle chassis earth. • High-voltage DC (+360 V) positive terminal A to vehicle chassis earth. • High-voltage DC (+360 V) positive terminal A and high- voltage DC (-360 V) negative terminal B. If the test result was greater than 3 V, there is a stuck closed contactor and a loss of isolation within the A4 battery pack assembly. Refer to Hybrid\EV Battery Voltage Present .	O
26	Verify that the voltage has been disabled at the X4 harness connector at the A28 hybrid battery contactor assembly. Using the EL-50774, verify the voltage measures less than 3 V at the following points: • High-voltage DC (-360 V) negative terminal B to vehicle chassis earth. • High-voltage DC (+360 V) positive terminal A to vehicle chassis earth. • High-voltage DC (+360 V) positive terminal A and high- voltage DC (-360 V) negative terminal B. If the test result was greater than 3 V, leave the EL-50774 connected to the terminals until the voltage drops below 3 V to allow the high-voltage capacitors to discharge. Continue to the next step once the voltage is below 3 V.	O
27	Disconnect the X5 harness connector at the A28 hybrid battery contactor assembly.	O
28	Connect the EL-50554-2 to the A28 hybrid battery contactor assembly. Using the EL-50774, verify the voltage measures less than 3 V at the following points: • High-voltage DC (-360 V) negative terminal B to vehicle chassis earth. • High-voltage DC (+360 V) positive terminal A to vehicle chassis earth. • High-voltage DC (+360 V) positive terminal A and high- voltage DC (-360 V) negative terminal B. If the test result was greater than 3 V, there is a stuck closed contactor and a loss of isolation within the A4 battery pack assembly. Refer to Hybrid\EV Battery Voltage Present .	O
29	Verify that the voltage has been disabled at the X5 harness connector at the A28 hybrid battery contactor assembly harness. Using the EL-50774, verify the voltage measures less than 3 V at the following points: • High-voltage DC (-360 V) negative terminal B to vehicle chassis earth. • High-voltage DC (+360 V) positive terminal A to vehicle chassis earth. • High-voltage DC (+360 V) positive terminal A and high- voltage DC (-360 V) negative terminal B. If the test result was greater than 3 V, leave the EL-50774 connected to the terminals until the voltage drops below 3 V to allow the high-voltage capacitors to discharge. Continue to the next step once the voltage is below 3 V.	O

30	Disconnect the X3 harness connector at the A28 hybrid battery contactor assembly.	O
31	Verify that the voltage has been disabled at the A28 hybrid battery contactor assembly. Using the EL-50774, verify the voltage measures less than 3 V at the following points: • High-voltage DC (-360 V) negative terminal B to vehicle chassis earth. • High-voltage DC (+360 V) positive terminal A to vehicle chassis earth. • High-voltage DC (+360 V) positive terminal A and high- voltage DC (-360 V) negative terminal B. If the test result was greater than 3 V, there is a stuck closed contactor and a loss of isolation within the A4 battery pack assembly. Refer to Hybrid\EV Battery Voltage Present .	O
32	**Note:** A 9 V DC battery can be used to test the EL-50774. Test the EL-50774 by measuring a 12 V battery. If the EL-50774 does not properly measure a 12 V battery, repair or replace the EL-50774 and repeat all voltage measurements.	O
33	If all the test results were less than 3 V, the A4 battery pack assembly, 360 V DC power inverter cables or general vehicle can now be serviced.	O
34	Sign, date and time this protocol. Replace red HIGH VOLTAGE ENABLED with GREEN HIGH VOLTAGE DISABLED sign.	O

Date:			
Time:		Signature	

LEAVE THE COMPLETELY FILLED OUT PROTOCOL CLEARLY VISIBLE INSIDE THE VEHICLE.

&#169© Copyright Chevrolet. All rights reserved

High-Voltage Enabling

Table 1: High-Voltage System Enabling Protocol
Table 2: Checklist Ampera/Volt Europe

Special Tools

EL-48900 HEV Safety Kit

EL-50554-1 14 V Power Inverter Assurance Harness

EL-50554-2 Charger Assurance Harness

EL-50774 Low/High-Resistance Meter

For equivalent regional tools, refer to Special Tools .

Danger: High voltage enabling and disabling shall be only performed by High Voltage Qualified Technicians. The procedures for high-voltage enabling/disabling can be found in the service instructions and must be strictly followed at all times. The usage of the Protocol High Voltage Disabling/Enabling is mandatory. The High-Voltage Qualified Technician is responsible for the adherence to the manufacturer's service instructions as well as current national legal regulations.

Failure to follow the procedures exactly as written may result in serious injury or death.

Questions regarding training can be answered by your national training centre.

Danger: Follow the safety regulations for hybrid/electric vehicles. The High-Voltage Qualified Technician is responsible for the adherence to the manufacturer's service instructions as well as current national legal regulations. Failure to follow the regulations exactly as written may result in serious injury or death.

Danger: Any hybrid/EV battery pack replacement shall be performed by High-Voltage Qualified Technicians only. The replacement procedure can be found in the service instruction and must be strictly followed at all times. The High-Voltage Qualified Technician is responsible for adherence to the manufacturer's service instructions as well as current national legal regulations. If the hybrid/EV battery pack needs to be replaced contact the Technical Assistance Centre for further instructions prior to removal of the battery pack.

Note: Print this form. Perform the High-Voltage Enabling procedures listed. Check off the individual steps as they are completed.

Note: A suitable hoist to safely lift the vehicle up is required to perform the enabling procedure.

Review the high-voltage safety information prior to performing the High-Voltage Enabling procedure. Refer to High Voltage Safety .

High-Voltage System Enabling Protocol

Name of certified person performing the high-voltage procedure:	
VIN	Licence Plate

Checklist Ampera/Volt Europe

	Procedure Description	Step Completed
1	Replace the GREEN HIGH VOLTAGE ENABLED with the RED HIGH VOLTAGE DISABLED sign.	O
2	Ensure the area around the vehicle is restricted and marked as such via warning cones, cordon tape or chain. Ensure all personnel not tasked with enabling the High-Voltage System have cleared the area.	O
3	Ensure that the keys and the S15 Hybrid/EV Battery Pack High Voltage Manual Disconnect Lever are securely stored outside the vehicle.	O
4	Disconnect and remove any 12 V battery chargers and cables, if connected.	O
5	Ensure that the 12 V battery is disconnected and the pole is covered to prevent uncontrolled reconnection with the battery cable.	O
6	Secure the vehicle from rolling, set transmission selector to park (P) position.	O
7	Verify if, and which repairs, were performed on the vehicle related to the High-Voltage System and that they are properly documented in the relevant work order file.	O
8	**Note:** Always tighten the high-voltage fasteners to the specified torque. Insufficient or excessive torque will cause malfunctions or damage. After finishing work on the high-voltage systems and before reinstalling the high-voltage manual disconnect lever, inspect for the following: Verify that all tools or loose components have been removed. Verify high-voltage system integrity and that all connectors are installed. Verify that all high-voltage interlock circuit connectors and covers are installed. Install any components or connectors that have been removed or replaced during diagnosis.	O
		Test Performed
9	If any high-voltage components or wiring had been removed, an electrical test of the earth connections must be performed with the EL-50774 and the 4-wire test leads. Refer to Earth Connection Resistance Test.	Yes: O / No: O
10	Install the S15 hybrid/EV battery pack high-voltage manual disconnect lever (1).	O
11	Connect the 12 V battery. Refer to Battery Negative Cable Disconnection and Connection .	O
12	With the bonnet open, start the engine, then Vehicle OFF.	O
	Vehicle in Service Mode, perform the driver's window express learn and clear all DTC Information with a scan tool. Refer to Window Motor Programming -	

13	Express Function .	O
14	Vehicle OFF and all vehicle systems OFF. It may take up to 2 minutes for all vehicle systems to power down.	O
15	Vehicle in Service Mode, verify with a scan tool no DTCs are set. If DTCs are set, go to the appropriate DTC information. Refer to Diagnostic Trouble Code (DTC) List - Vehicle .	O
16	Start and idle the engine for 2 minutes.	O
17	Vehicle OFF and wait 5 minutes.	O
18	Vehicle in Service Mode, verify with the scan tool the T6 traction power inverter module and K114B hybrid/EV powertrain control module 2 DTC Information that the following DTCs have Ran Since Code Clear and have not set: 1. Motor position sensor learn DTCs P0C17 and P0C18. 2. Contactor DTCs P0AD9, P0ADD, P0D0A, P0D11, P0AE4 and P1EBC. 3. Discharge and Pre-charge DTCs P0C76, P0C77, P0C78 and P0AFB. 4. High-voltage loss of isolation DTCs P0AA6, P1AE6 and P1F0E. If the DTCs have Run and Passed, test drive the vehicle and verify no DTCs are set. If the DTCs are set, go to the appropriate DTC information. Refer to Diagnostic Trouble Code (DTC) List - Vehicle . If the DTCs have Not Run Since Code Clear, review and operate the vehicle according to the applicable DTC Conditions for Running and ensure the DTCs run and pass.	O
19	**Note:** Ensure this protocol is kept with the vehicle's records after all test steps and repairs have been completed. Sign, date and time this protocol. Replace red HIGH VOLTAGE ENABLED with GREEN HIGH VOLTAGE DISABLED sign.	O

Date:			
Time:		Signature	

LEAVE THE COMPLETELY FILLED OUT PROTOCOL CLEARLY VISIBLE INSIDE THE VEHICLE.

&#169© Copyright Chevrolet. All rights reserved

DTC P0601-P0604 or P0606 - Hybrid Powertrain Control Module 2

Diagnostic Instructions

- Perform the Diagnostic System Check - Vehicle prior to using this diagnostic procedure.
- Review Strategy Based Diagnosis for an overview of the diagnostic approach.
- Diagnostic Procedure Instructions provides an overview of each diagnostic category.

DTC Descriptors

DTC P0601 00: Control Module Read Only Memory Performance

DTC P0602 00: Control Module Not Programmed

DTC P0603 00: Control Module Long Term Memory Reset

DTC P0604 00: Control Module Random Access Memory Performance

DTC P0606 00: Control Module Processor Performance

Circuit/System Description

This diagnostic applies to internal microprocessor integrity conditions within the control module. This diagnostic also addresses if the control module is not programmed. The control module monitors its ability to read and write to the memory. It also monitors a timing function. No external circuits are involved.

Conditions for Running the DTC

- Vehicle ON.
- The system voltage is at least 7 V.

Conditions for Setting the DTC

The control module detects an internal malfunction or incomplete programming.

Action Taken When the DTC Sets

- DTCsP0601, P0602, P0603, P0604, and P0606 are Type A DTCs.
- The high-voltage contactor relays may open.

Conditions for Clearing the DTC

DTCsP0601, P0602, P0603, P0604, and P0606 are Type A DTCs.

Diagnostic Aids

DTC P0606 may set in Hybrid Powertrain Control Module 2 due to other faults. Do not replace the Hybrid Powertrain Control Module 2 until other DTCs are diagnosed first.

Circuit/System Verification

Verify that DTC P0601, P0602, P0603, P0604, or P0606 is not set.

If DTC P0601, P0602, P0603, P0604, or P0606 is set with other DTCs set, diagnose all other DTCs first. Refer to Diagnostic Trouble Code (DTC) List - Vehicle .
If the DTC P0601, P0602, P0603, P0604, or P0606 is set without other DTCs set, refer toDTC P0601-P0604, P0606, or P062F .

Repair Instructions

Perform the Diagnostic Repair Verification after completing the diagnostic procedure.

Control Module References for control module replacement, programming and setup

© Copyright Chevrolet. All rights reserved

DTC P0641-P0643 or P0651-P0653

Diagnostic Instructions

- Perform the Diagnostic System Check - Vehicle prior to using this diagnostic procedure.
- Review Strategy Based Diagnosis for an overview of the diagnostic approach.
- Diagnostic Procedure Instructions provides an overview of each diagnostic category.

DTC Descriptors

DTC P0641: 5 V Reference 1 Circuit - Main

DTC P0642: 5 V Reference 1 Circuit Low Voltage

DTC P0643: 5 V Reference 1 Circuit High Voltage

DTC P0651: 5 V Reference 2 Circuit - Charger

DTC P0652: 5 V Reference 2 Circuit Low Voltage

DTC P0653: 5 V Reference 2 Circuit High Voltage

Circuit/System Description

The high-voltage interlock circuit is utilised to verify high-voltage component integrity. High-voltage interlock circuit is a circuit loop that passes through certain high-voltage components. High-voltage interlock circuit is used to determine if access to high-voltage components is being attempted. The opening of these high-voltage components causes high- voltage interlock circuit to open. The hybrid powertrain control module 2 monitors both the high- voltage interlock 5 V reference circuit voltage and the high-voltage interlock signal circuit voltage in order to detect circuit faults. When the hybrid powertrain control module 2 detects a loss of high-voltage interlock circuit voltage, the high-voltage contactors are commanded open.

Conditions for Running the DTC

- The 12 V battery voltage is greater than 9 V.

- The hybrid powertrain control module 2 is awake and communicating

Conditions for Setting the DTC

DTC P0641 and P0643

The hybrid powertrain control module 2 detects the main loop 5 V reference voltage is greater than 4.90 V.

DTC P0642

The hybrid powertrain control module 2 detects the main loop 5 V reference voltage is less than 2.63 V and the main loop signal is less than 1.08 V.

DTC P0651 and P0653

The hybrid powertrain control module 2 detects the charger loop 5 V reference voltage is greater than 4.90 V.

DTC P0652

The hybrid powertrain control module 2 detects the charger loop 5 V reference voltage is less than 2.63 V and the charger loop signal is less than 1.08 V.

Action Taken When the DTC Sets

DTCs P0641-P0643 and P0651-P0653 are type A DTCs.

Conditions for Clearing the DTC

DTCs P0641-P0643 and P0651-P0653 are type A DTCs.

Reference Information

Schematic Reference

Hybrid Energy Storage Schematics

Connector End View Reference

Component Connector End Views

Description and Operation

Drive Motor Battery System Description

Electrical Information Reference

- Circuit Testing
- Connector Repairs
- Testing for Intermittent Conditions and Poor Connections
- Wiring Repairs

DTC Type Reference

Powertrain Diagnostic Trouble Code (DTC) Type Definitions

Scan Tool Reference

Control Module References for scan tool information

Special Tools

EL-48900 HEV Safety Kit

For equivalent regional tools, refer to Special Tools .

Circuit/System Verification

1. Ignition ON, observe the scan tool High-Voltage System Interlock Circuit Status parameter. The reading should be PASS.
   If the reading is UNKNOWN or FAIL, refer to P0641, P0642 and P0643.
2. Observe the scan tool Battery Charging System High-Voltage Interlock Circuit Status parameter. The reading should be PASS.
   If the reading is UNKNOWN or FAIL, refer to P0651, P0652 and P0653.

Circuit/System Testing

Danger: High voltage enabling and disabling shall be only performed by High Voltage Qualified Technicians. The procedures for high-voltage enabling/disabling can be found in the service instructions and must be strictly followed at all times. The usage of the Protocol High Voltage Disabling/Enabling is mandatory. The High-Voltage Qualified Technician is responsible for the adherence to the manufacturer's service instructions as well as current national legal regulations.

Failure to follow the procedures exactly as written may result in serious injury or death.

Questions regarding training can be answered by your national training centre.

Danger: Any hybrid/EV battery pack replacement shall be performed by High-Voltage Qualified Technicians only. The replacement procedure can be found in the service instruction and must be strictly followed at all times. The High-Voltage Qualified Technician is responsible for adherence to the manufacturer's service instructions as well as current national legal regulations. If the hybrid/EV battery pack needs to be replaced contact the Technical Assistance Centre for further instructions prior to removal of the battery pack.

P0641, P0642, and P0643

Note: The main high-voltage interlock circuit is routed through several in-line connectors and modules.

1. Ignition OFF, disable high voltage at the A4 hybrid/EV battery pack. Refer to High Voltage Disabling
2. Connect the 12 V battery.
3. Ignition ON, test for 4.8-5.2 V between the 5 V reference circuit terminal A at the S15 hybrid battery pack high voltage manual disconnect housing and earth.
   If less than the specified range, test the 5 V reference circuit for a short to ground or an open/high resistance. If the circuit tests normal, replace the K114B hybrid powertrain control module 2.
   If greater than the specified range, test the 5 V reference circuit for a short to voltage. If the circuit tests normal, replace the K114B hybrid powertrain control module 2.
4. Ignition OFF and all vehicle systems OFF. It may take up to 2 minutes for all vehicle systems to power down. Test for 8-10k Ω between the signal circuit terminal B and earth.
   If less than the specified range, test the signal circuit for a short to ground. If the circuit tests normal, replace the K114B hybrid powertrain control module 2.
   If greater than the specified range, test the signal circuit for an open/high resistance. If the circuit tests normal, replace the K114B hybrid powertrain control module 2.
5. If all circuits test normal, test or replace the S15 hybrid battery pack high-voltage manual disconnect.

Danger: High voltage enabling and disabling shall be only performed by High Voltage Qualified Technicians. The procedures for high-voltage enabling/disabling can be found in the service instructions and must be strictly followed at all times. The usage of the Protocol High Voltage Disabling/Enabling is mandatory. The High-Voltage Qualified Technician is responsible for the adherence to the manufacturer's service instructions as well as current national legal regulations.

Failure to follow the procedures exactly as written may result in serious injury or death.

Questions regarding training can be answered by your national training centre.

Danger: Any hybrid/EV battery pack replacement shall be performed by High-Voltage Qualified Technicians only. The replacement procedure can be found in the service instruction and must be strictly followed at all times. The High-Voltage Qualified Technician is responsible for adherence to the manufacturer's service instructions as well as current national legal regulations. If the hybrid/EV battery pack needs to be replaced contact the Technical Assistance Centre for further instructions prior to removal of the battery pack.

P0651, P0652, and P0653

Note: The charger high-voltage interlock circuit is routed through several in-line connectors.

1. Ignition OFF, disable high voltage at the A4 hybrid/EV battery pack. Refer to High Voltage Disabling .
2. Connect the 12 V battery.
3. Ignition ON, test for 4.8-5.2 V between the 5 V reference circuit terminal C of the S15 hybrid battery pack high- voltage manual disconnect housing and earth.

If less than the specified range, test the 5 V reference circuit for a short to ground or an open/high resistance. If the circuit tests normal, replace the K114B hybrid powertrain control module 2.

If greater than the specified range, test the 5 V reference circuit for a short to voltage. If the circuit tests normal, replace the K114B hybrid powertrain control module 2.

4. Ignition OFF and all vehicle systems OFF. It may take up to 2 minutes for all vehicle systems to power down. Test for 8-10k Ω between the signal circuit terminal D and earth.

   If less than the specified range, test the signal circuit for a short to ground. If the circuit tests normal, replace the K114B hybrid powertrain control module 2.

   If greater than the specified range, test the signal circuit for an open/high resistance. If the circuit tests normal, replace the K114B hybrid powertrain control module 2.
5. If all circuits test normal, test or replace the S15 hybrid battery pack high-voltage manual disconnect.

Component Testing

Test for 35-45 Ω between the following terminals of the S15 hybrid battery pack high-voltage manual disconnect:

- Terminal A and terminal B
- Terminal C and terminal D

If not within the specified range, replace the S15 hybrid battery pack high-voltage manual disconnect.

Repair Instructions

Perform the Diagnostic Repair Verification after completing the repair.

- Drive Motor Battery Replacement and Shipping Preparation
- Control Module References for hybrid powertrain control module 2, 14 V power module, power inverter module, air conditioning compressor control module and coolant heater control module replacement, programming and set-up

&#169© Copyright Chevrolet. All rights reserved

DTC P0A0C or P0A0D

Diagnostic Instructions

- Perform the Diagnostic System Check - Vehicle prior to using this diagnostic procedure.
- Review Strategy Based Diagnosis for an overview of the diagnostic approach.
- Diagnostic Procedure Instructions provides an overview of each diagnostic category.

DTC Descriptors

DTC P0A0C: High-Voltage System Interlock Circuit Low Voltage

DTC P0A0D: High-Voltage System Interlock Circuit High Voltage

Circuit/System Description

The main high-voltage interlock circuit is utilised to verify high- voltage component integrity. The main high-voltage interlock circuit is used to determine if access to high-voltage components is being attempted. The opening of these high-voltage components causes the main high-voltage interlock circuit to open. The hybrid powertrain control module 2 sources about 12 mA of current on the 5 V main high-voltage interlock circuit loop. The hybrid powertrain control module 2 monitors both the main high-voltage interlock 5 V reference circuit current and the main high-voltage interlock signal circuit current in order to detect circuit faults. When the hybrid powertrain control module 2 detects a loss of main high-voltage interlock circuit current, the high-voltage contactors are commanded open.

Conditions for Running the DTC

P0A0C

- The 12 V battery voltage is greater than 9 V.
- The high-voltage contactors are closed.

P0A0D

- The 12 V battery voltage is greater than 9 V.

- The hybrid powertrain control module 2 is awake and communicating.

Conditions for Setting the DTC

P0A0C

- The hybrid powertrain control module 2 detects main high-voltage interlock circuit 5 V reference current is between 5-18 mA and high-voltage interlock circuit signal current is less than 5 mA.
- DTC P0A0C sets within 1 second when the above condition is met.

P0A0D

- The hybrid powertrain control module 2 detects main high-voltage interlock circuit 5 V reference current is less than 5 mA and high-voltage interlock circuit signal current is greater than 35 mA.
- DTC P0A0D sets within 1 second when the above condition is met.

Action Taken When the DTC Sets

- DTCs P0A0C and P0A0D are Type A DTCs.
- The hybrid powertrain control module 2 opens the main high- voltage contactors when vehicle speed is less than 5 km/h (3 mph).

Conditions for Clearing the DTC

DTCs P0A0C and P0A0D are Type A DTCs.

Diagnostic Aids

- Test for a fully engaged hybrid battery pack high voltage manual disconnect whenever an open high-voltage interlock circuit condition is observed. The hybrid battery pack high-voltage manual disconnect must be pressed down fully in order to engage the high-voltage interlock circuit terminals.
- The main high-voltage interlock circuit is also routed through several in-line connectors.
- With the ignition in the OFF position, the hybrid powertrain control module 2 will source 12 mA on the main high-voltage interlock circuit for 5 minutes every time a vehicle door is opened.

  Note: The following diagnostic aid applies for both current and history DTCs.

- Tapping or wiggling the F115 Hybrid/EV Battery Pack Fuse Cover may duplicate the condition.

Reference Information

Schematic Reference

Hybrid Energy Storage Schematics

Connector End View Reference

Component Connector End Views

Description and Operation

Drive Motor Battery System Description

Electrical Information Reference

- Circuit Testing
- Connector Repairs
- Testing for Intermittent Conditions and Poor Connections
- Wiring Repairs

DTC Type Reference

Powertrain Diagnostic Trouble Code (DTC) Type Definitions

Scan Tool Reference

Control Module References for scan tool information

Special Tools

EL-48900 HEV Safety Kit

For equivalent regional tools, refer to Special Tools .

Circuit/System Verification

Ignition ON, observe the hybrid powertrain control module 2 High Voltage Interlock Circuit Status parameter.

The parameter should indicate a PASS condition.

Circuit/System Testing

Danger: High voltage enabling and disabling shall be only performed by High Voltage Qualified Technicians. The procedures for high-voltage enabling/disabling can be found in the service instructions and must be strictly followed at all times. The usage of the Protocol High Voltage Disabling/Enabling is mandatory. The High-Voltage Qualified Technician is responsible for the adherence to the manufacturer's service instructions as well as current national legal regulations.

Failure to follow the procedures exactly as written may result in serious injury or death.

Questions regarding training can be answered by your national training centre.

Danger: Any hybrid/EV battery pack replacement shall be performed by High-Voltage Qualified Technicians only. The replacement procedure can be found in the service instruction and must be strictly followed at all times. The High-Voltage Qualified Technician is responsible for adherence to the manufacturer's service instructions as well as current national legal regulations. If the hybrid/EV battery pack needs to be replaced contact the Technical Assistance Centre for further instructions prior to removal of the battery pack.

Note: The charger high-voltage interlock circuit is routed through several in-line connectors.

1. Vehicle OFF, disable high-voltage at the A4 hybrid/EV battery pack. Refer to High Voltage Disabling .
2. Connect the 12 V battery.
3. Vehicle in Service Mode, test for 4.8-5.2 V between the 5 V reference circuit terminal A at S15 hybrid battery pack high-voltage manual disconnect housing and earth.
   If less than the specified range, test the 5 V reference circuit for a short to ground or an open/high resistance. If the circuit tests normal, replace the K114B hybrid powertrain control module 2.
   If greater than the specified range, test the 5 V reference circuit for a short to voltage. If the circuit tests normal, replace the K114B hybrid powertrain control module 2.
4. Vehicle OFF and all vehicle systems OFF. It may take up to 2 minutes for all vehicle systems to power down. Test for 8-10k Ω between the signal circuit terminal B and earth.
   If less than the specified range, test the signal circuit for a short to ground. If the circuit tests normal, replace the K114B hybrid powertrain control module 2.
   If greater than the specified range, test the signal circuit for an open/high resistance. If the circuit tests normal, replace the K114B hybrid powertrain control module 2.
5. If all circuits test normal, test or replace the S15 hybrid battery pack high-voltage manual disconnect.

Component Testing

Test for 35-45 Ω between the following terminals of the S15 hybrid battery pack high-voltage manual disconnect:

- Terminal A and terminal B
- Terminal C and terminal D

If not within the specified range, replace the S15 hybrid battery pack high-voltage manual disconnect.

Repair Instructions

Perform the Diagnostic Repair Verification after completing the repair.

- Drive Motor Battery Replacement and Shipping Preparation
- Control Module References for hybrid powertrain control module 2, 14 V power module, power inverter module, air conditioning compressor control module and coolant heater control module replacement, programming and set-up

&#169© Copyright Chevrolet. All rights reserved

DTC P0A80

Diagnostic Instructions

- Perform the Diagnostic System Check - Vehicle prior to using this diagnostic procedure.
- Review Strategy Based Diagnosis for an overview of the diagnostic approach.
- Diagnostic Procedure Instructions provides an overview of each diagnostic category.

DTC Descriptor

DTC P0A80: Replace Hybrid/EV Battery Pack

Circuit/System Description

The battery energy control module will determine when a fault condition is present. Diagnostics and system status are communicated from the battery energy control module to hybrid powertrain control module 2 through serial data. The hybrid powertrain control module 2 is the host controller for diagnostic trouble code information.

Conditions for Running the DTC

- Vehicle in Service Mode.
- Hybrid battery temperature is greater than -7°C (19.4°F)
- Hybrid battery state of charge is between 20% and 90%
- Battery voltage and current is varying. Requires more than 10 minutes of city driving.
- None of the following DTCs are set: P0A9C, P0A9D, P0A9E, P0ABB, P0ABC, P0ABD, P0AC1, P0AC2, P0AC6, P0AC7, P0AC8, P0ACB, P0ACC, P0ACD, P0AE9, P0AEA, P0AEB, P0AF8, P0B13, P0B10, P0B11, P0BC3, P0BC4, P0BC5, P0C34, P0C35, P0C36, P0C7D, P0C7E, P0C7F, P0C82, P0C83, P0C84, P0C89, P0C8A, P0C8B, P0C8E, P0C8F, P0C90, P0C93, P0C94, P0C95, P0C98, P0C99, P0C9A, P0CA9, P0CAA, P0CAB, P0CAE, P0CAF, P0CB0, P0CB3, P0CB4, P0CB5, P0CB8, P0CB9, P0CBA, P1A07, P1E8E, P1E8F, P1E90, P1E91, P1E93, P1E94, P1E95, P1E96, P1E97, P1E99, P1E9A, P1E9B, P1E9C, P1E9D, P1E9F, P1EA0, P1EA1, P1EA2, P1EA3, P1EA5, P1EB1, P1EB2, P1EB3, P1EB4, P1EB5, P1EBA, P1EBB, U2401, U2603, U2604, U2605, U2606, U0111 and U185A

Conditions for Setting the DTC

- Battery voltage and current is varying. Requires more than 10 minutes of city driving.

- Hybrid Battery Calculated Resistance is greater than 1 Ω.

Action Taken When the DTC Sets

DTC P0A80 is a type B DTC.

Conditions for Clearing the DTC

DTC P0A80 is a type B DTC.

Reference Information

Schematic Reference

Hybrid Energy Storage Schematics

Connector End View Reference

Component Connector End Views

Description and Operation

Drive Motor Battery System Description

Electrical Information Reference

- Circuit Testing
- Connector Repairs
- Testing for Intermittent Conditions and Poor Connections
- Wiring Repairs

DTC Type Reference

Powertrain Diagnostic Trouble Code (DTC) Type Definitions

Scan Tool Reference

Control Module References for scan tool information

Special Tools

EL-48900 HEV Safety Kit

For equivalent regional tools, refer to Special Tools .

Circuit/System Verification

Danger: Any hybrid/EV battery pack replacement shall be performed by High-Voltage Qualified Technicians only. The replacement procedure can be found in the service instruction and must be strictly followed at all times. The High-Voltage Qualified Technician is responsible for adherence to the manufacturer's service instructions as well as current national legal regulations. If the hybrid/EV battery pack needs to be replaced contact the Technical Assistance Centre for further instructions prior to removal of the battery pack.

1. Verify that no other DTCs are set.
   If any other DTCs are set, refer to Diagnostic Trouble Code (DTC) List - Vehicle .
2. If DTC P0A80 is set, replace the A4 hybrid/EV battery pack.

Repair Instructions

Perform the Diagnostic Repair Verification after completing the repair.

- Drive Motor Battery Replacement and Shipping Preparation
- Control Module References for battery energy control module replacement and hybrid battery interface control modules 1-4, programming and set-up for the hybrid/EV battery pack replacement.

&#169© Copyright Chevrolet. All rights reserved

DTC P0AA1, P0AD9, P0ADD, P0AE2, P0AE4, P0D0A, P0D11, P1EBC-P1EBF, P1EC0 or P1EC3-P1EC5

Diagnostic Instructions

- Perform the Diagnostic System Check - Vehicle prior to using this diagnostic procedure.
- Review Strategy Based Diagnosis for an overview of the diagnostic approach.
- Diagnostic Procedure Instructions provides an overview of each diagnostic category.

DTC Descriptors

DTC P0AA1: Hybrid/EV Battery Positive Contactor Circuit Stuck Closed

DTC P0AD9: Hybrid/EV Battery Positive Contactor Control Circuit

DTC P0ADD: Hybrid/EV Battery Negative Contactor Control Circuit

DTC P0AE2: Hybrid/EV Battery Precharge Transistor Circuit Stuck On

DTC P0AE4: Hybrid/EV Battery Precharge Transistor Control Circuit

DTC P0D0A: Battery Charging System Positive Contactor Control Circuit

DTC P0D11: Battery Charging System Negative Contactor Control Circuit

DTC P1EBC: Hybrid/EV Battery Multifunction Contactor Control Circuit

DTC P1EBD: Battery Charging System Contactors Stuck Open

DTC P1EBE: Hybrid/EV Battery Multifunction Contactor Stuck Open

DTC P1EBF: Hybrid/EV Battery Multifunction Contactor Stuck Closed

DTC P1EC0: Hybrid/EV Battery System Contactors Stuck Open

DTC P1EC3: Hybrid/EV Battery Pack Heater Transistor Control Circuit

DTC P1EC4: Hybrid/EV Battery Pack Heater Transistor Stuck Off

DTC P1EC5: Hybrid/EV Battery Pack Heater Transistor Stuck On

Circuit/System Description

The hybrid/EV battery contains 5 high-voltage contactors and 2 transistors. The high-voltage contactors allow the high-voltage DC batteries to be connected to the vehicle or safely contain the high-voltage DC within the hybrid/EV battery assembly. The 5 high-voltage contactors are a main positive high-voltage contactor, main negative high-voltage contactor, charge positive high-voltage contactor, charge negative high-voltage contactor and multi-function high-voltage contactor. The 2 transistors are the precharge transistor and heater transistor. These contactors/transistors close and open in sequence and are controlled by the hybrid/EV powertrain control module 2. The hybrid/EV powertrain control module 2 supplies voltage to the control circuit for the high-voltage contactors/transistors. Earth is provided through the case earth.

Conditions for Running the DTC

P0AA1

- Is run once during a precharge event.
- The 12 V battery voltage is greater than 9 V.
- The main negative contactor is closed.
- The bus voltage reading at the hybrid/EV powertrain control module 2 is less than 15% of battery voltage before the negative contactor closes.
- None of the following DTCs are set; P0ABC, P0ABD, P1A07, P0ABB, P0AF8, P1AE8, P1AE9 or P1AEC

P0AD9, P0ADD, P0AE4, P0D0A, P0D11 and P1EBC

The 12 V battery voltage is greater than 10 V.

P0AE2

- During precharge mode.
- The multi-function contactor and negative contactor are closed.
- None of the following DTCs are set; P0AA1, P0ABC, P0ABD, P1A07, P0ABB, P0AF8, P1AE8, P1AE9 or P1AEC

P1EBD or P1EBE

- Runs once at the beginning of each charge cycle.
- The 12 V battery voltage is greater than 9 V.

- The vehicle is in charge mode.
- Charge mode is not in heat only mode.
- The heater transistor is commanded on for 2 seconds.
- None of the following DTCs are set; P0AC1, P0AC2, P0B10, P0B11, P0B13, P0D53, P0D54, P1EBA or P1EBB.

P1EBF

CHARGE MODE

- Runs once during charger precharge.
- The 12 V battery voltage is greater than 9 V.
- The battery charger negative and positive contactors are closed.
- None of the following DTCs are set; P0AC1, P0AC2, P0B10, P0B11, P0B13, P0D53, P0D54, P1EBA or P1EBB.

OR

BATTERY HEATING ONLY MODE

- The 12 V battery voltage is greater than 9 V.
- The battery charger is in heating only mode.
- Battery current is greater than 1 A.
- None of the following DTCs are set; P0AC1, P0AC2, P0B10, P0B11, P0B13, P0D53, P0D54, P1EBA or P1EBB.

P1EC0

- The 12 V battery voltage is greater than 9 V.
- The main positive and negative contactors are closed for more than 1 second.
- None of the following DTCs are set; P1AE8, P1AE9 or P1AEC.

P1EC3

- The hybrid/EV powertrain control module is awake and communicating.
- The 12 V battery voltage is greater than 9 V.

P1EC4

- Runs once at the beginning of each charge cycle.
- The 12 V battery voltage is greater than 9 V.
- The vehicle is in charge mode.
- Charge mode is not in heat only mode.

- None of the following DTCs are set; P0AC1, P0AC2, P0B10, P0B11, P0B13, P0D53, P0D54, P1EBA or P1EBB.

P1EC5

- The 12 V battery voltage is greater than 9 V.
- During battery charger precharge mode.
- The battery charger negative and positive contactors are closed.
- The multi-function contactor is open.
- The heater transistor duty cycle is less than 5 %.
- None of the following DTCs are set; P0D53 or P0D54.

Conditions for Setting the DTC

P0AA1 and P0AE2

The bus voltage is measured to be greater than 80% of battery voltage.

P0AD9, P0ADD, P0AE4, P0D0A, P0D11 and P1EBC

The hybrid/EV powertrain control module 2 has detected an open or short-circuit to voltage in the control circuit for the corresponding contactor.

P1EBD

- The heater transistor is commanded on for 2 seconds.
- The charger commanded output current is greater than 1 A and the charger output current is less than 1 A.

P1EBE

The Accumulated Battery Current greater than 100 A has been detected for 4 seconds.

P1EBF

CHARGE MODE

The charger high-voltage output is greater than 130 V for the first 300 ms of the charger precharge mode.

OR

BATTERY HEATING ONLY MODE

Battery current of more than 1 A is detected at the charger during battery heater only mode.

P1EC0

The main bus voltage is less than 80% of battery voltage.

P1EC3

The hybrid/EV powertrain control module 2 has detected a fault in the heater transistor control circuit.

P1EC4

The total Accumulated Battery Current difference between the battery charger output current and the battery charging current after 4 seconds is less than 200 A.

P1EC5

The battery charger sensed current is greater than 0.4 A during the battery charger precharge mode with the multi-function and heater transistor commanded OFF.

Action Taken When the DTC Sets

- DTCs P0AA1, P0AD9, P0AE2, P0AE4, P0D0A, P0D11, P1EBD, P1EBE, P1EC0 or P1EC5 are type A DTCs.
- The contactors will be opened.
- Battery charging mode will not be available.
  OR
- DTCs P0ADD, P1EBC or P1EBF, P1EC3, or P1EC4 are type B DTCs.
  OR
- DTC P1EC3 is a type B DTC.
- The hybrid/EV battery heater will be disabled.

Conditions for Clearing the DTC

- DTCs P0AA1, P0AD9, P0AE2, P0AE4, P0D0A, P0D11, P1EBD, P1EBE, P1EC0 or P1EC5 are type A DTCs.
  OR
- DTCs P0ADD, P1EBC or P1EBF, P1EC3, or P1EC4 are type B DTCs.

Diagnostic Aids

- P1EC5 may cause a overheat condition and set a P0C4A.

- P0ADD will result in precharge too long and set a P0C78.
- P1EC3 or P1EC4 will prevent battery heating and the vehicle will be unable to start in cold weather with battery temperatures below -25°C (-13°F).

Note: If the high-voltage contactors opened while under high-current load, replace the drive motor battery wire junction block relay. The following conditions could cause the high-voltage contactors to open while under high-current load:

- A collision resulting in supplemental inflatable restraint deployment.
- A loss of power or earth to the hybrid/EV powertrain control module 2 while the vehicle is moving.

Reference Information

Schematic Reference

Hybrid Energy Storage Schematics

Connector End View Reference

Component Connector End Views

Description and Operation

Drive Motor Battery System Description

Electrical Information Reference

- Circuit Testing
- Connector Repairs
- Testing for Intermittent Conditions and Poor Connections
- Wiring Repairs

DTC Type Reference

Powertrain Diagnostic Trouble Code (DTC) Type Definitions

Scan Tool Reference

Control Module References for scan tool information

Special Tools

EL-48900 HEV Safety Kit

For equivalent regional tools, refer to Special Tools .

Circuit/System Verification

1. Vehicle OFF, disable the high voltage at the A4 hybrid/EV battery pack. Refer to High Voltage Disabling .
2. Connect the 12 V battery.
3. Vehicle in Service Mode, verify that DTC P0AE2, P0AE4, P1EC3, P1EC4 or P1EC5 is not set.
   If DTC P0AE2 or P0AE4 is set, refer to Hybrid/EV Battery Precharge Transistor Diagnosis.
   If DTC P1EC3, P1EC4 or P1EC5 is set, refer to Hybrid/EV Battery Pack Heater Transistor Diagnosis.
4. Command the Hybrid/EV Battery Negative Contactor OPEN and CLOSED with a scan tool while listening for the contactor to open and close. The Hybrid/EV Battery Negative Contactor should be heard opening and closing.
   If the Hybrid/EV Battery Negative Contactor does not open and close, refer to Hybrid/EV Battery Negative Contactor Diagnosis.
5. Command the Hybrid/EV Battery Positive Contactor OPEN and CLOSED with a scan tool while listening for the contactor to open and close. The Hybrid/EV Battery Positive Contactor should be heard opening and closing.
   If the Hybrid/EV Battery Positive Contactor does not open and close, refer to Hybrid/EV Battery Positive Contactor Diagnosis.
6. Command the Battery Charging System Negative Contactor OPEN and CLOSED with a scan tool while listening for the contactor to open and close. The Battery Charging System Negative Contactor should be heard opening and closing.
   If the Hybrid/EV Battery Negative Contactor does not open and close, refer to Battery Charging System Negative Contactor Diagnosis.
7. Command the Battery Charging System Positive Contactor OPEN and CLOSED with a scan tool while listening for the contactor to open and close. The Battery Charging System Positive Contactor should be heard opening and closing.
   If the Battery Charging System Positive Contactor does not open and close, refer to Battery Charging System Positive Contactor Diagnosis.
8. Command the Hybrid/EV Battery Multifunction Contactor OPEN and CLOSED with a scan tool while listening for the contactor to open and close. The Hybrid/EV Battery Multifunction Contactor should be heard opening and closing.
   If the Hybrid/EV Battery Multi-function Contactor does not open and close, refer to Hybrid/EV Battery Multifunction Contactor Diagnosis.

Circuit/System Testing

P0AE2 or P0AE4 - Hybrid/EV Battery Precharge Transistor Diagnosis

Danger: High voltage enabling and disabling shall be only performed by High Voltage Qualified Technicians. The procedures for high-voltage enabling/disabling can be found in the service instructions and must be strictly followed at all times. The usage of the Protocol High Voltage Disabling/Enabling is mandatory. The High-Voltage Qualified Technician is responsible for the adherence to the manufacturer's service instructions as well as current national legal regulations.

Failure to follow the procedures exactly as written may result in serious injury or death.

Questions regarding training can be answered by your national training centre.

Danger: Any hybrid/EV battery pack replacement shall be performed by High-Voltage Qualified Technicians only. The replacement procedure can be found in the service instruction and must be strictly followed at all times. The High-Voltage Qualified Technician is responsible for adherence to the manufacturer's service instructions as well as current national legal regulations. If the hybrid/EV battery pack needs to be replaced contact the Technical Assistance Centre for further instructions prior to removal of the battery pack.

1. Vehicle OFF, disable the high voltage at the A4 hybrid/EV battery pack. Refer to High Voltage Disabling .
2. Connect the 12 V battery.
3. Disconnect the X2 harness connector at the A28 hybrid/EV battery contactor assembly.
4. Vehicle OFF and all vehicle systems OFF. It may take up to 2 minutes for all vehicle systems to power down. Test for less than 10 Ω between the ground circuit terminal 5 and ground.
   If greater than the specified range, test the ground circuit for an open/high resistance.
5. Verify that a test lamp illuminates between the B+ circuit terminal 9 and ground.
   If the test lamp does not illuminate, test the B+ circuit for a short to ground or an open/high resistance. If the circuit tests normal and the B+ circuit fuse is open, replace the A4 hybrid/EV battery pack.
6. Reconnect the X2 harness connector at the A28 hybrid/EV battery contactor assembly.

   Note: If connectors X1 and X2 were disconnected during the disabling procedure, reconnect X1 before commanding the contactor closed.

7. Vehicle in Service Mode, command the Hybrid/EV Battery Pack Precharge Transistor CLOSED.

   Note: Ignore DTC P0AD9, P0ADD, P0AE4, P0D0A, P0D11, P1EBC or P1EC3 when disconnecting the X1 connector with the Vehicle in Service Mode.

8. Disconnect the X1 harness connector at the A28 hybrid/EV battery contactor assembly.
9. Connect a test lamp between control circuit terminal 11 and earth.
10. Vehicle in Service Mode, command the Hybrid/EV Battery Pack Precharge Transistor OPEN and CLOSED with a scan tool. The test lamp should turn ON and OFF when changing between the commanded states.
    If the test lamp is always ON, test the control circuit for a short to voltage. If the circuit tests normal, replace the hybrid powertrain control module 2.
    If the test lamp is always OFF, test the control circuit for a short to ground or an open/high resistance. If the circuit tests normal, replace the hybrid powertrain control module 2.
11. If all circuits test normal, replace the A4 hybrid/EV battery pack.

P1EC3, P1EC4, or P1EC5 - Hybrid/EV Battery Pack Heater Transistor Diagnosis

Danger: High voltage enabling and disabling shall be only performed by High Voltage Qualified Technicians. The procedures for high-voltage enabling/disabling can be found in the service instructions and must be strictly followed at all times. The usage of the Protocol High Voltage Disabling/Enabling is mandatory. The High-Voltage Qualified Technician is responsible for the adherence to the manufacturer's service instructions as well as current national legal regulations.

Failure to follow the procedures exactly as written may result in serious injury or death.

Questions regarding training can be answered by your national training centre.

Danger: Any hybrid/EV battery pack replacement shall be performed by High-Voltage Qualified Technicians only. The replacement procedure can be found in the

service instruction and must be strictly followed at all times. The High-Voltage Qualified Technician is responsible for adherence to the manufacturer's service instructions as well as current national legal regulations. If the hybrid/EV battery pack needs to be replaced contact the Technical Assistance Centre for further instructions prior to removal of the battery pack.

1. Vehicle OFF, disable the high voltage at the A4 hybrid/EV battery pack. Refer to High Voltage Disabling .
2. Connect the 12 V battery.
3. Disconnect the X2 harness connector at the A28 hybrid/EV battery contactor assembly.
4. Vehicle OFF and all vehicle systems OFF. It may take up to 2 minutes for all vehicle systems to power down. Test for less than 10 Ω between the ground circuit terminal 5 and ground.
   If greater than the specified range, test the ground circuit for an open/high resistance.
5. Verify that a test lamp illuminates between the B+ circuit terminal 9 and ground.
   If the test lamp does not illuminate, test the B+ circuit for a short to ground or an open/high resistance. If the circuit tests normal and the B+ circuit fuse is open, replace the A4 hybrid/EV battery pack.
6. Vehicle in Service Mode, test for less than 1 V between the control circuit terminal 2 harness connector at the A28 hybrid battery contactor assembly and earth.
   If greater than the specified range, test the control circuit for a short to voltage. If the circuit tests normal, replace the K114B hybrid powertrain control module 2.
7. Vehicle OFF, test for infinite resistance between control circuit terminal 2 harness connector at the A28 hybrid battery contactor assembly and earth.
   If less than the specified value, test the control circuit for a short to ground. If the circuit tests normal, replace the K114B hybrid powertrain control module 2.
8. Disconnect the X2 harness connector at the K114B hybrid powertrain control module 2.
9. Test for less than 2 Ω in the control circuit end to end between terminal 2 X2 harness connector at the A28 hybrid battery contactor assembly and terminal 54 X2 harness connector at the K114B hybrid powertrain control module 2.
   If greater than the specified range, test the control circuit for an open/high resistance.
10. If all circuits test normal, replace the K114B hybrid/EV powertrain control module 2. If the DTC resets, replace the A4 hybrid/EV battery pack.

P1EC0 - Hybrid/EV Battery System Contactors Stuck Open Diagnosis

Danger: High voltage enabling and disabling shall be only performed by High Voltage Qualified Technicians. The procedures for high-voltage enabling/disabling can be found in the service instructions and must be strictly followed at all times. The usage of the Protocol High Voltage Disabling/Enabling is mandatory. The High-Voltage Qualified Technician is responsible for the adherence to the manufacturer's service instructions as well as current national legal regulations.

Failure to follow the procedures exactly as written may result in serious injury or death.

Questions regarding training can be answered by your national training centre.

Danger: Any hybrid/EV battery pack replacement shall be performed by High-Voltage Qualified Technicians only. The replacement procedure can be found in the service instruction and must be strictly followed at all times. The High-Voltage Qualified Technician is responsible for adherence to the manufacturer's service instructions as well as current national legal regulations. If the hybrid/EV battery pack needs to be replaced contact the Technical Assistance Centre for further instructions prior to removal of the battery pack.

1. Vehicle OFF, disable the high voltage at the A4 hybrid/EV battery pack. Refer to High Voltage Disabling .
2. Connect the 12 V battery.
3. Disconnect the X2 harness connector at the A28 hybrid/EV battery contactor assembly.

4. Vehicle OFF and all vehicle systems OFF. It may take up to 2 minutes for all vehicle systems to power down. Test for less than 10 Ω between the ground circuit terminal 5 and ground.
   If greater than the specified range, test the ground circuit for an open/high resistance.
5. Verify that a test lamp illuminates between the B+ circuit terminal 9 and ground.
   If the test lamp does not illuminate, test the B+ circuit for a short to ground or an open/high resistance. If the circuit tests normal and the B+ circuit fuse is open, replace the A4 hybrid/EV battery pack.
6. Reconnect the X2 harness connector at the A28 hybrid/EV battery contactor assembly.

   Note: If connectors X1 and X2 were disconnected during the disabling procedure, reconnect X1 before commanding the contactor closed.

7. Vehicle in Service Mode, command the Hybrid/EV Battery Negative Contactor CLOSED.

   Note: Ignore DTC P0AD9, P0ADD, P0AE4, P0D0A, P0D11, P1EBC or P1EC3 when disconnecting the X1 connector with the Vehicle in Service Mode.

8. Disconnect the X1 harness connector at the A28 hybrid/EV battery contactor assembly.
9. Connect a test lamp between control circuit terminal 4 and ground.
10. Vehicle in Service Mode, command the Hybrid/EV Battery Negative Contactor OPEN and CLOSED with a scan tool. The test lamp should turn ON and OFF when changing between the commanded states.
    If the test lamp is always ON, test the control circuit for a short to voltage. If the circuit tests normal, replace the hybrid powertrain control module 2.
    If the test lamp is always OFF, test the control circuit for a short to ground or an open/high resistance. If the circuit tests normal, replace the hybrid powertrain control module 2.
11. Connect a test lamp between control circuit terminal 2 and ground.
12. Command the Hybrid/EV Battery Positive Contactor OPEN and CLOSED with a scan tool. The test lamp should turn ON and OFF when changing between the commanded states.
    If the test lamp is always ON, test the control circuit for a short to voltage. If the circuit tests normal, replace the hybrid powertrain control module 2.
    If the test lamp is always OFF, test the control circuit for a short to ground or an open/high resistance. If the circuit tests normal, replace the hybrid powertrain control module 2.
13. If all circuits test normal, replace the A4 hybrid/EV battery pack.

P0ADD - Hybrid/EV Battery Negative Contactor Diagnosis

Danger: High voltage enabling and disabling shall be only performed by High Voltage Qualified Technicians. The procedures for high-voltage enabling/disabling can be found in the service instructions and must be strictly followed at all times. The usage of the Protocol High Voltage Disabling/Enabling is mandatory. The High-Voltage Qualified Technician is responsible for the adherence to the manufacturer's service instructions as well as current national legal regulations.

Failure to follow the procedures exactly as written may result in serious injury or death.

Questions regarding training can be answered by your national training centre.

Danger: Any hybrid/EV battery pack replacement shall be performed by High-Voltage Qualified Technicians only. The replacement procedure can be found in the service instruction and must be strictly followed at all times. The High-Voltage Qualified Technician is responsible for adherence to the manufacturer's service

instructions as well as current national legal regulations. If the hybrid/EV battery pack needs to be replaced contact the Technical Assistance Centre for further instructions prior to removal of the battery pack.

1. Vehicle OFF, disable the high voltage at the A4 hybrid/EV battery pack. Refer to High Voltage Disabling .
2. Connect the 12 V battery.
3. Disconnect the X2 harness connector at the A28 hybrid/EV battery contactor assembly.
4. Vehicle OFF and all vehicle systems OFF. It may take up to 2 minutes for all vehicle systems to power down. Test for less than 10 Ω between the ground circuit terminal 5 and ground.
   If greater than the specified range, test the ground circuit for an open/high resistance.
5. Verify that a test lamp illuminates between the B+ circuit terminal 9 and ground.
   If the test lamp does not illuminate, test the B+ circuit for a short to ground or an open/high resistance. If the circuit tests normal and the B+ circuit fuse is open, replace the A4 hybrid/EV battery pack.
6. Reconnect the X2 harness connector at the A28 hybrid/EV battery contactor assembly.

   Note: If connectors X1 and X2 were disconnected during the disabling procedure, reconnect X1 before commanding the contactor closed.

7. Vehicle in Service Mode, command the Hybrid/EV Battery Negative Contactor CLOSED.

   Note: Ignore DTC P0AD9, P0ADD, P0AE4, P0D0A, P0D11, P1EBC or P1EC3 when disconnecting the X1 connector with the Vehicle in Service Mode.

8. Disconnect the X1 harness connector at the A28 hybrid/EV battery contactor assembly.
9. Connect a test lamp between control circuit terminal 4 and ground.
10. Vehicle in Service Mode, command the Hybrid/EV Battery Negative Contactor OPEN and CLOSED with a scan tool. The test lamp should turn ON and OFF when changing between the commanded states.
    If the test lamp is always ON, test the control circuit for a short to voltage. If the circuit tests normal, replace the hybrid powertrain control module 2.
    If the test lamp is always OFF, test the control circuit for a short to ground or an open/high resistance. If the circuit tests normal, replace the hybrid powertrain control module 2.
11. If all circuits test normal, replace the A4 hybrid/EV battery pack.

P0AA1 or P0AD9 - Hybrid/EV Battery Positive Contactor Diagnosis

Danger: High voltage enabling and disabling shall be only performed by High Voltage Qualified Technicians. The procedures for high-voltage enabling/disabling can be found in the service instructions and must be strictly followed at all times. The usage of the Protocol High Voltage Disabling/Enabling is mandatory. The High-Voltage Qualified Technician is responsible for the adherence to the manufacturer's service instructions as well as current national legal regulations.

Failure to follow the procedures exactly as written may result in serious injury or death.

Questions regarding training can be answered by your national training centre.

Danger: Any hybrid/EV battery pack replacement shall be performed by High-Voltage Qualified Technicians only. The replacement procedure can be found in the service instruction and must be strictly followed at all times. The High-Voltage Qualified Technician is responsible for adherence to the manufacturer's service instructions as well as current national legal regulations. If the hybrid/EV battery pack needs to be replaced contact the Technical Assistance Centre for further

instructions prior to removal of the battery pack.

1. Vehicle OFF, disable the high voltage at the A4 hybrid/EV battery pack. Refer to High Voltage Disabling .
2. Connect the 12 V battery.
3. Disconnect the X2 harness connector at the A28 hybrid/EV battery contactor assembly.
4. Vehicle OFF and all vehicle systems OFF. It may take up to 2 minutes for all vehicle systems to power down. Test for less than 10 Ω between the ground circuit terminal 5 and ground.
   If greater than the specified range, test the ground circuit for an open/high resistance.
5. Verify that a test lamp illuminates between the B+ circuit terminal 9 and ground.
   If the test lamp does not illuminate, test the B+ circuit for a short to ground or an open/high resistance. If the circuit tests normal and the B+ circuit fuse is open, replace the A4 hybrid/EV battery pack.
6. Reconnect the X2 harness connector at the A28 hybrid/EV battery contactor assembly.

   Note: If connectors X1 and X2 were disconnected during the disabling procedure, reconnect X1 before commanding the contactor closed.

7. Vehicle in Service Mode, command the Hybrid/EV Battery Positive Contactor CLOSED.

   Note: Ignore DTC P0AD9, P0ADD, P0AE4, P0D0A, P0D11, P1EBC or P1EC3 when disconnecting the X1 connector with the Vehicle in Service Mode.

8. Disconnect the X1 harness connector at the A28 hybrid/EV battery contactor assembly.
9. Connect a test lamp between control circuit terminal 2 and ground.
10. Command the Hybrid/EV Battery Positive Contactor OPEN and CLOSED with a scan tool. The test lamp should turn ON and OFF when changing between the commanded states.
    If the test lamp is always ON, test the control circuit for a short to voltage. If the circuit tests normal, replace the hybrid powertrain control module 2.
    If the test lamp is always OFF, test the control circuit for a short to ground or an open/high resistance. If the circuit tests normal, replace the hybrid powertrain control module 2.
11. If all circuits test normal, replace the A4 hybrid/EV battery pack.

P1EBD - Battery Charging System Contactors Stuck Open Diagnosis

Danger: High voltage enabling and disabling shall be only performed by High Voltage Qualified Technicians. The procedures for high-voltage enabling/disabling can be found in the service instructions and must be strictly followed at all times. The usage of the Protocol High Voltage Disabling/Enabling is mandatory. The High-Voltage Qualified Technician is responsible for the adherence to the manufacturer's service instructions as well as current national legal regulations.

Failure to follow the procedures exactly as written may result in serious injury or death.

Questions regarding training can be answered by your national training centre.

Danger: Any hybrid/EV battery pack replacement shall be performed by High-Voltage Qualified Technicians only. The replacement procedure can be found in the service instruction and must be strictly followed at all times. The High-Voltage Qualified Technician is responsible for adherence to the manufacturer's service instructions as well as current national legal regulations. If the hybrid/EV battery pack needs to be replaced contact the Technical Assistance Centre for further instructions prior to removal of the battery pack.

1. Vehicle OFF, disable the high voltage at the A4 hybrid/EV battery pack. Refer to High Voltage Disabling .
2. Connect the 12 V battery.
3. Disconnect the X2 harness connector at the A28 hybrid/EV battery contactor assembly.
4. Vehicle OFF and all vehicle systems OFF. It may take up to 2 minutes for all vehicle systems to power down. Test for less than 10 Ω between the ground circuit terminal 5 and ground.
   If greater than the specified range, test the ground circuit for an open/high resistance.
5. Verify that a test lamp illuminates between the B+ circuit terminal 9 and ground.
   If the test lamp does not illuminate, test the B+ circuit for a short to ground or an open/high resistance. If the circuit tests normal and the B+ circuit fuse is open, replace the A4 hybrid/EV battery pack.
6. Reconnect the X2 harness connector at the A28 hybrid/EV battery contactor assembly.

   Note: If connectors X1 and X2 were disconnected during the disabling procedure, reconnect X1 before commanding the contactor closed.

7. Vehicle in Service Mode, command the Battery Charging System Negative Contactor CLOSED.

   Note: Ignore DTC P0AD9, P0ADD, P0AE4, P0D0A, P0D11, P1EBC or P1EC3 when disconnecting the X1 connector with the Vehicle in Service Mode.

8. Disconnect the X1 harness connector at the A28 hybrid/EV battery contactor assembly.
9. Connect a test lamp between control circuit terminal 9 and earth.
10. Command the Battery Charging System Negative Contactor OPEN and CLOSED with a scan tool. The test lamp should turn ON and OFF when changing between the commanded states.
    If the test lamp is always ON, test the control circuit for a short to voltage. If the circuit tests normal, replace the hybrid powertrain control module 2.
    If the test lamp is always OFF, test the control circuit for a short to ground or an open/high resistance. If the circuit tests normal, replace the hybrid powertrain control module 2.
11. Connect a test lamp between control circuit terminal 7 and earth.
12. Command the Battery Charging System Positive Contactor OPEN and CLOSED with a scan tool. The test lamp should turn ON and OFF when changing between the commanded states.
    If the test lamp is always ON, test the control circuit for a short to voltage. If the circuit tests normal, replace the hybrid powertrain control module 2.
    If the test lamp is always OFF, test the control circuit for a short to ground or an open/high resistance. If the circuit tests normal, replace the hybrid powertrain control module 2.
13. If all circuits test normal, replace the A4 hybrid/EV battery pack.

P0D11 - Battery Charging System Negative Contactor Diagnosis

Danger: High voltage enabling and disabling shall be only performed by High Voltage Qualified Technicians. The procedures for high-voltage enabling/disabling can be found in the service instructions and must be strictly followed at all times. The usage of the Protocol High Voltage Disabling/Enabling is mandatory. The High-Voltage Qualified Technician is responsible for the adherence to the manufacturer's service instructions as well as current national legal regulations.

Failure to follow the procedures exactly as written may result in serious injury or death.

Questions regarding training can be answered by your national training centre.

Danger: Any hybrid/EV battery pack replacement shall be performed by High-Voltage Qualified Technicians only. The replacement procedure can be found in the service instruction and must be strictly followed at all times. The High-Voltage Qualified Technician is responsible for adherence to the manufacturer's service instructions as well as current national legal regulations. If the hybrid/EV battery pack needs to be replaced contact the Technical Assistance Centre for further instructions prior to removal of the battery pack.

1. Vehicle OFF, disable the high voltage at the A4 hybrid/EV battery pack. Refer to High Voltage Disabling .
2. Connect the 12 V battery.
3. Disconnect the X2 harness connector at the A28 hybrid/EV battery contactor assembly.
4. Vehicle OFF and all vehicle systems OFF. It may take up to 2 minutes for all vehicle systems to power down. Test for less than 10 Ω between the ground circuit terminal 5 and ground.
   If greater than the specified range, test the ground circuit for an open/high resistance.
5. Verify that a test lamp illuminates between the B+ circuit terminal 9 and ground.
   If the test lamp does not illuminate, test the B+ circuit for a short to ground or an open/high resistance. If the circuit tests normal and the B+ circuit fuse is open, replace the A4 hybrid/EV battery pack.
6. Reconnect the X2 harness connector at the A28 hybrid/EV battery contactor assembly.

   Note: If connectors X1 and X2 were disconnected during the disabling procedure, reconnect X1 before commanding the contactor closed.

7. Vehicle in Service Mode, command the Battery Charging System Negative Contactor CLOSED.

   Note: Ignore DTC P0AD9, P0ADD, P0AE4, P0D0A, P0D11, P1EBC or P1EC3 when disconnecting the X1 connector with the Vehicle in Service Mode.

8. Disconnect the X1 harness connector at the A28 hybrid/EV battery contactor assembly.
9. Connect a test lamp between control circuit terminal 9 and earth.
10. Command the Battery Charging System Negative Contactor OPEN and CLOSED with a scan tool. The test lamp should turn ON and OFF when changing between the commanded states.
    If the test lamp is always ON, test the control circuit for a short to voltage. If the circuit tests normal, replace the hybrid powertrain control module 2.
    If the test lamp is always OFF, test the control circuit for a short to ground or an open/high resistance. If the circuit tests normal, replace the hybrid powertrain control module 2.
11. If all circuits test normal, replace the A4 hybrid/EV battery pack.

P0D0A - Battery Charging System Positive Contactor Diagnosis

Danger: High voltage enabling and disabling shall be only performed by High Voltage Qualified Technicians. The procedures for high-voltage enabling/disabling can be found in the service instructions and must be strictly followed at all times. The usage of the Protocol High Voltage Disabling/Enabling is mandatory. The High-Voltage Qualified Technician is responsible for the adherence to the manufacturer's service instructions as well as current national legal regulations.

Failure to follow the procedures exactly as written may result in serious injury or death.

Questions regarding training can be answered by your national training centre.

Danger: Any hybrid/EV battery pack replacement shall be performed by High-Voltage Qualified Technicians only. The replacement procedure can be found in the service instruction and must be strictly followed at all times. The High-Voltage Qualified Technician is responsible for adherence to the manufacturer's service instructions as well as current national legal regulations. If the hybrid/EV battery pack needs to be replaced contact the Technical Assistance Centre for further instructions prior to removal of the battery pack.

1. Vehicle OFF, disable the high voltage at the A4 hybrid/EV battery pack. Refer to High Voltage Disabling .
2. Connect the 12 V battery.
3. Disconnect the X2 harness connector at the A28 hybrid/EV battery contactor assembly.
4. Vehicle OFF and all vehicle systems OFF. It may take up to 2 minutes for all vehicle systems to power down. Test for less than 10 Ω between the ground circuit terminal 5 and ground.
   If greater than the specified range, test the ground circuit for an open/high resistance.
5. Verify that a test lamp illuminates between the B+ circuit terminal 9 and ground.
   If the test lamp does not illuminate, test the B+ circuit for a short to ground or an open/high resistance. If the circuit tests normal and the B+ circuit fuse is open, replace the A4 hybrid/EV battery pack.
6. Reconnect the X2 harness connector at the A28 hybrid/EV battery contactor assembly.

   Note: If connectors X1 and X2 were disconnected during the disabling procedure, reconnect X1 before commanding the contactor closed.

7. Vehicle in Service Mode, command the Battery Charging System Negative Contactor CLOSED.

   Note: Ignore DTC P0AD9, P0ADD, P0AE4, P0D0A, P0D11, P1EBC or P1EC3 when disconnecting the X1 connector with the Vehicle in Service Mode.

8. Disconnect the X1 harness connector at the A28 hybrid/EV battery contactor assembly.
9. Connect a test lamp between control circuit terminal 7 and earth.
10. Command the Battery Charging System Positive Contactor OPEN and CLOSED with a scan tool. The test lamp should turn ON and OFF when changing between the commanded states.
    If the test lamp is always ON, test the control circuit for a short to voltage. If the circuit tests normal, replace the hybrid powertrain control module 2.
    If the test lamp is always OFF, test the control circuit for a short to ground or an open/high resistance. If the circuit tests normal, replace the hybrid powertrain control module 2.
11. If all circuits test normal, replace the A4 hybrid/EV battery pack.

P1EBC, P1EBE or P1EBF - Hybrid/EV Battery Multifunction Contactor Diagnosis

Danger: High voltage enabling and disabling shall be only performed by High Voltage Qualified Technicians. The procedures for high-voltage enabling/disabling can be found in the service instructions and must be strictly followed at all times. The usage of the Protocol High Voltage Disabling/Enabling is mandatory. The High-Voltage Qualified Technician is responsible for the adherence to the manufacturer's service instructions as well as current national legal regulations.

Failure to follow the procedures exactly as written may result in serious injury or death.

Questions regarding training can be answered by your national training centre.

Danger: Any hybrid/EV battery pack replacement shall be performed by High-Voltage Qualified Technicians only. The replacement procedure can be found in the service instruction and must be strictly followed at all times. The High-Voltage Qualified Technician is responsible for adherence to the manufacturer's service instructions as well as current national legal regulations. If the hybrid/EV battery pack needs to be replaced contact the Technical Assistance Centre for further instructions prior to removal of the battery pack.

1. Vehicle OFF, disable the high voltage at the A4 hybrid/EV battery pack. Refer to High Voltage Disabling .
2. Connect the 12 V battery.
3. Disconnect the X2 harness connector at the A28 hybrid/EV battery contactor assembly.
4. Vehicle OFF and all vehicle systems OFF. It may take up to 2 minutes for all vehicle systems to power down. Test for less than 10 Ω between the ground circuit terminal 5 and ground.
   If greater than the specified range, test the ground circuit for an open/high resistance.
5. Verify that a test lamp illuminates between the B+ circuit terminal 9 and ground.
   If the test lamp does not illuminate, test the B+ circuit for a short to ground or an open/high resistance. If the circuit tests normal and the B+ circuit fuse is open, replace the A4 hybrid/EV battery pack.
6. Reconnect the X2 harness connector at the A28 hybrid/EV battery contactor assembly.

   Note: If connectors X1 and X2 were disconnected during the disabling procedure, reconnect X1 before commanding the contactor closed.

7. Vehicle in Service Mode, command the Hybrid/EV Battery Multi-function Contactor CLOSED.

   Note: Ignore DTC P0AD9, P0ADD, P0AE4, P0D0A, P0D11, P1EBC or P1EC3 when disconnecting the X1 connector with the Vehicle in Service Mode.

8. Disconnect the X1 harness connector at the A28 hybrid/EV battery contactor assembly.
9. Connect a test lamp between control circuit terminal 6 and earth.
10. Command the Hybrid/EV Battery Multifunction Contactor OPEN and CLOSED with a scan tool. The test lamp should turn ON and OFF when changing between the commanded states.
    If the test lamp is always ON, test the control circuit for a short to voltage. If the circuit tests normal, replace the hybrid powertrain control module 2.
    If the test lamp is always OFF, test the control circuit for a short to ground or an open/high resistance. If the circuit tests normal, replace the hybrid powertrain control module 2.
11. If all circuits test normal, replace the A4 hybrid/EV battery pack.

Repair Instructions

Perform the Diagnostic Repair Verification after completing the repair.

- Drive Motor Battery Replacement and Shipping Preparation
- Control Module References for hybrid/EV powertrain control module 2, battery energy control module replacement and hybrid battery interface control modules 1-4, programming and set-up for the hybrid/EV battery pack replacement.

&#169© Copyright Chevrolet. All rights reserved

DTC P0AA6, P1AE6 or P1F0E

Diagnostic Instructions

- Perform the Diagnostic System Check - Vehicle prior to using this diagnostic procedure.
- Review Strategy Based Diagnosis for an overview of the diagnostic approach.
- Diagnostic Procedure Instructions provides an overview of each diagnostic category.

DTC Descriptors

DTC P0AA6: Hybrid/EV Battery Voltage System Isolation Lost

DTC P1AE6: Battery Energy Control Module Hybrid/EV Battery Voltage Isolation Sensor Circuit

DTC P1F0E: Battery Charging Voltage System Isolation Lost

Circuit/System Description

The vehicle is equipped with a high-voltage isolation monitor feature. The purpose of the battery energy control module high-voltage isolation monitor circuit is to test the resistance between the high- voltage positive and negative direct current (DC) bus and chassis earth. The battery energy control module isolation monitoring system measures the resistance between the high-voltage system and chassis earth in the following way. The battery energy control module places an AC signal on the high-voltage system and monitors its amplitude. A reduced amplitude return signal indicates a loss of resistance to chassis earth. This isolation monitor method is sometimes referred to as the active isolation monitor. The hpcm2 requests the BECM to perform this test. Measurement values are reported to the hpcm2 , which makes the determination of an isolation fault.

The isolation check for P0AA6 Hybrid Battery Voltage System Isolation Lost runs when all the contactors (main positive, main negative contactor, multi-purpose contactor, charger positive contactor and charger negative contactor) are open. This check monitors isolation in the drive motor battery system. This check runs only once during the time that the hpcm2 is awake and runs after the contactors have been open for 10 seconds. This monitor typically runs when the vehicle is turned off after a drive. It could also run when the vehicle is first started, if there is a long enough period between the hpcm2 waking up and the main contactors closing.

The isolation check for P1F0E Battery Charging Voltage System Isolation Lost runs when the main contactors and the multi-purpose contactor are open and the charger contactors are closed. This check monitors for isolation in the charger system along with the drive motor battery system. This check runs once during the time that the hpcm2 is awake and requires that the contactors main and multi-purpose contactors be open and the charger contactors be closed for 10 seconds.

The battery energy control module runs an internal self check of this sensor circuit. When this test fails, DTC P1AE6 will be set.

Conditions for Running the DTC

P0AA6

- The hybrid powertrain control module 2 and battery energy control module are awake and communicating
- All the contactors (main positive, main negative contactor, multi-purpose contactor, charger positive contactor and charger negative contactor) transition to open for 10 seconds.

P1AE6

- The 12 V battery voltage is greater than 11 V.
- The hybrid powertrain control module 2 and battery energy control module are awake and communicating.
- The hybrid powertrain control module 2 has requested the battery energy control module to run the isolation test.
- The main contactors are open.
- DTC U185B is not set.

P1F0E

- The hybrid powertrain control module 2 and battery energy control module are awake and communicating
- The vehicle is in Charge Mode Only for 10 seconds. Heating or cooling modes are not active.

Conditions for Setting the DTC

P0AA6

- The battery energy control module has detected active isolation resistance is less than 325k Ω.
- 5 Vehicle ON and Vehicle OFF cycles have occurred.

P1AE6

The battery energy control module has detected no return AC signal, thus indicating a fault with the active isolation sensing circuits.

P1F0E

- During charge mode the battery energy control module has detected active isolation resistance of less than 325k Ω after 10 seconds.
- 5 Vehicle ON and Vehicle OFF cycles have occurred.

Action Taken When the DTC Sets

DTCs P0AA6, P1AE6 and P1F0E are Type A DTCs.

Conditions for Clearing the DTC

- DTCs P0AA6, P1AE6 and P1F0E are Type A DTCs.
- P0AA6 and P1F0E require one Vehicle ON and Vehicle OFF cycle
- P0AA6 and P1F0E require a minimum resistance of 400K Ω.

Diagnostic Aids

- A single high-voltage contactor stuck closed can set this DTC.
- An open charger fuse may cause a P1AE6 or P1F0E.
- Condensation or water intrusion into the hybrid/EV battery pack may cause P0AA6, P1AE6 or P1F0E to set.
- Low or no coolant in the hybrid/EV battery cooling system may cause P0AA6, P1AE6 or P1F0E to set.

Reference Information

Schematic Reference

Hybrid Energy Storage Schematics

Connector End View Reference

Component Connector End Views

Description and Operation

Drive Motor Battery System Description

Electrical Information Reference

- Circuit Testing
- Connector Repairs
- Testing for Intermittent Conditions and Poor Connections
- Wiring Repairs

DTC Type Reference

Powertrain Diagnostic Trouble Code (DTC) Type Definitions

Scan Tool Reference

Control Module References for scan tool information

Special Tools

EL-48900 HEV Safety Kit

For equivalent regional tools, refer to Special Tools .

Circuit/System Verification

1. Verify that the vehicle hybrid/EV battery cooling system is full.
   If the hybrid/EV battery cooling system is low, refer to Hybrid/EV Battery Cooling Diagnostic .
2. Observe the scan tool hybrid powertrain control module 2, Isolation Test Resistance parameter. The reading should display greater than 500k Ω.

Circuit/System Testing

Danger: High voltage enabling and disabling shall be only performed by High Voltage Qualified Technicians. The procedures for high-voltage enabling/disabling can be found in the service instructions and must be strictly followed at all times. The usage of the Protocol High Voltage Disabling/Enabling is mandatory. The High-Voltage Qualified Technician is responsible for the adherence to the manufacturer's service instructions as well as current national legal regulations.

Failure to follow the procedures exactly as written may result in serious injury or death.

Questions regarding training can be answered by your national training centre.

Danger: Any hybrid/EV battery pack replacement shall be performed by High-Voltage Qualified Technicians only. The replacement procedure can be found in the service instruction and must be strictly followed at all times. The High-Voltage Qualified Technician is responsible for adherence to the manufacturer's service instructions as well as current national legal regulations. If the hybrid/EV battery pack needs to be replaced contact the Technical Assistance Centre for further instructions prior to removal of the battery pack.

1. Vehicle OFF, disable the high voltage at the A4 hybrid/EV battery pack. Refer to High Voltage Disabling .
2. Connect the 12 V battery.
3. Vehicle in Service Mode, verify that DTC P0A7E, P0AA1, P0AD9, P0ADD, P0AE2, P0AE4, P0C32, P0D0A, P0D11, P1EBC-P1EBF, P1EC0 or P1EC3-P1EC5 is not set.
   If any DTC is set, refer to Diagnostic Trouble Code (DTC) List - Vehicle .
4. Vehicle OFF, disconnect the 12 V battery.

Note: The following continuity tests must be performed using an Insulation Multimeter. Select the Isolation test setting, then select the 500 V range.

5. With the Insulation Multimeter, set on the Isolation test setting, test for greater than 400k Ω between the A28 hybrid battery contactor assembly harness connector terminals listed below and chassis earth:
   - Battery charger negative harness side terminal B X5
   - Battery charger positive harness side terminal A X5

   If less than the specified range, disconnect the X4 connector at the T18 battery charger. Test for greater than 400k Ω between the circuit terminals and chassis earth. If the test result is greater than the specified value, replace the T18 battery charger. If the test result is less than the specified range, replace the 300 V DC cables and test or replace the charger fuse.
6. Remove the fuse cover and battery protector (Insulator). Refer to Battery Charger and 14 V Power Module Maxi 20 A Fuse Replacement .
7. With the Insulation Multimeter, set on Ohm setting, test for less than 1 Ω across the battery charger fuse.
   If greater than the specified range, replace the battery charger fuse.
8. If all the circuit tests normal, replace the A4 hybrid/EV battery pack.

Repair Instructions

Perform the Diagnostic Repair Verification after completing the repair.

- Battery Charger and 14 V Power Module Maxi 20 A Fuse Replacement
- 300 Volt Battery Positive and Negative Cable Replacement : Drive Motor Battery-to-APM Module → Drive Motor Battery-to-Charger → Inverter-to-Compressor/Heater Module → Drive Motor Battery-to-Inverter
- Drive Motor Battery Replacement and Shipping Preparation
- Control Module References for battery energy control module replacement, programming and set-up for the hybrid/EV battery pack replacement.

&#169© Copyright Chevrolet. All rights reserved

DTC P0ABB, P0ABC or P0ABD

Diagnostic Instructions

- Perform the Diagnostic System Check - Vehicle prior to using this diagnostic procedure.
- Review Strategy Based Diagnosis for an overview of the diagnostic approach.
- Diagnostic Procedure Instructions provides an overview of each diagnostic category.

DTC Descriptors

DTC P0ABB: Hybrid/EV Battery Voltage Sensor Circuit Performance

DTC P0ABC: Hybrid/EV Battery Voltage Sensor Circuit Low Voltage

DTC P0ABD: Hybrid/EV Battery Voltage Sensor Circuit High Voltage

Circuit/System Description

The hybrid powertrain control module 2 monitors individual cell voltage readings from the battery energy control module. The battery energy control module monitors the voltage of the 96 battery cell groups. Voltage sense lines are attached to each individual cell group, and these sense lines terminate at a connector located on the top surface of the battery section. A serviceable voltage sense harness joins this connector to a drive motor battery high-voltage interface control module, also located on the top surface of the battery section. The drive motor battery high-voltage interface control module encodes the voltage reading and transmits it to the battery energy control module through the battery control harness. There is one drive motor battery high-voltage interface control module located on battery sections one and two, and two drive motor battery high-voltage interface control modules associated with battery section three. The drive motor battery high-voltage interface control module, voltage sense harnesses, battery control harness and battery energy control module are all considered serviceable components.

Conditions for Running the DTC

P0ABB

- The hybrid powertrain control module 2 and battery energy control module is awake and communicating.
- DTC U0111 or U185A is not set.

P0ABC and P0ABD

- The hybrid powertrain control module 2 and battery energy control module is awake and communicating.
- The 12 V battery voltage is greater than or equal to 9 V.
- DTC P1A07 is not set.

Conditions for Setting the DTC

P0ABB

The hybrid powertrain control module 2 detects difference of 10 V between the average cell group voltage multiplied by 96 and the voltage measured at battery side of the main contactors.

P0ABC

The battery energy control module detects the terminal voltage is less than 24 V on the battery side of the main contactors.

P0ABD

The battery energy control module detects the terminal voltage is greater than 456 V on the battery side of the main contactors.

Action Taken When the DTC Sets

DTCs P0ABB, P0ABC and P0ABD are type B DTCs.

Conditions for Clearing the DTC

DTCs P0ABB, P0ABC and P0ABD are type B DTCs.

Diagnostic Aids

The hybrid/EV battery pack high-voltage manual service disconnect is out, not installed correctly, or a blown manual service disconnect fuse will cause P0ABB and/or P0ABC to set.

Reference Information

Schematic Reference

Hybrid Energy Storage Schematics

Connector End View Reference

Component Connector End Views

Description and Operation

Drive Motor Battery System Description

Electrical Information Reference

- Circuit Testing
- Connector Repairs
- Testing for Intermittent Conditions and Poor Connections
- Wiring Repairs

DTC Type Reference

Powertrain Diagnostic Trouble Code (DTC) Type Definitions

Scan Tool Reference

Control Module References for scan tool information

Special Tools

EL-48900 HEV Safety Kit

For equivalent regional tools, refer to Special Tools .

Circuit/System Verification

Ignition ON, engine OFF, observe the battery energy control module scan tool Hybrid Battery Pack Terminal 1 Voltage, Hybrid Battery Pack Terminal 2 Voltage parameters, and the hybrid powertrain control module 2 Hybrid Battery Pack Voltage parameter. The readings should be between 288-393.6 V, and should be within 10 V of each other.

Circuit/System Testing

Danger: High voltage enabling and disabling shall be only performed by High Voltage Qualified Technicians. The procedures for high-voltage enabling/disabling can be found in the service instructions and must be strictly followed at all times. The usage of the Protocol High Voltage Disabling/Enabling is mandatory. The High-Voltage Qualified

Technician is responsible for the adherence to the manufacturer's service instructions as well as current national legal regulations.

Failure to follow the procedures exactly as written may result in serious injury or death.

Questions regarding training can be answered by your national training centre.

Danger: Any hybrid/EV battery pack replacement shall be performed by High-Voltage Qualified Technicians only. The replacement procedure can be found in the service instruction and must be strictly followed at all times. The High-Voltage Qualified Technician is responsible for adherence to the manufacturer's service instructions as well as current national legal regulations. If the hybrid/EV battery pack needs to be replaced contact the Technical Assistance Centre for further instructions prior to removal of the battery pack.

1. Verify that no other DTCs are set.
   If any other DTCs are set, refer to Diagnostic Trouble Code (DTC) List - Vehicle
2. If DTC P0ABB, P0ABC or P0ABD is set, replace the A4 hybrid/EV battery pack. If DTC P0ABB resets, replace the K114B hybrid powertrain control module 2.

Repair Instructions

Perform the Diagnostic Repair Verification after completing the repair.

- Drive Motor Battery Replacement and Shipping Preparation
- Control Module References for battery energy control module and hybrid powertrain control module 2 replacement , programming and set-up for the hybrid/EV battery pack replacement.

&#169© Copyright Chevrolet. All rights reserved

DTC P0AC1, P0AC2, P0B10, P0B11, P0B13, P1EBA or P1EBB

Diagnostic Instructions

- Perform the Diagnostic System Check - Vehicle prior to using this diagnostic procedure.
- Review Strategy Based Diagnosis for an overview of the diagnostic approach.
- Diagnostic Procedure Instructions provides an overview of each diagnostic category.

DTC Descriptors

DTC P0AC1: Hybrid/EV Battery Low Resolution Current Sensor Circuit Low Voltage

DTC P0AC2: Hybrid/EV Battery Low Resolution Current Sensor Circuit High Voltage

DTC P0B10: Hybrid/EV Battery High Resolution Current Sensor Circuit Low Voltage

DTC P0B11: Hybrid/EV Battery High Resolution Current Sensor Circuit High Voltage

DTC P0B13: Hybrid/EV Battery Low Resolution Current Sensor High Resolution Current Sensor Not Plausible

DTC P1EBA: Hybrid/EV Battery Low Resolution Current Sensor Exceeded Learning Limit

DTC P1EBB: Hybrid/EV Battery High Resolution Current Sensor Exceeded Learning Limit

Circuit/System Description

The hybrid/EV battery current sensor is mounted inside the hybrid/EV battery pack. The positive high-voltage cable that goes to the positive contactor relay passes through the hybrid/EV battery pack current sensor. The hybrid/EV battery pack current sensor detects the amperage that flows in and out of the hybrid/EV batteries. The battery energy control module supplies and monitors a 5 V reference signal to the hybrid/EV battery pack current sensor. The hybrid/EV battery pack current sensor returns a signal between 0 and 5 V to the battery energy control module. The hybrid/EV battery pack current sensor signal is in proportion to the amperage going in and out of the hybrid/EV battery pack. A signal voltage of the hybrid/EV battery pack current sensor greater than 2.5 V indicates that the hybrid/EV battery is being charged and a signal voltage less than 2.5 V indicates discharging. The hybrid/EV battery pack current sensor has 2 measurement ranges in order to maintain accuracy. The ranges are low resolution and high resolution. The measurement ranges of the hybrid/EV battery pack current sensor have some overlap with each other. The high resolution measures from -23 to +23 A. The

low resolution measures from -470 to +280 A.

Conditions for Running the DTC

P0AC1, P0AC2, P0B10 and P0B11

- The 12 V battery voltage is greater than or equal to 9 V.
- The battery energy control module is awake and communicating.
- DTC P1A07 is not set.

P0B13

- The hybrid/EV battery low-resolution current sensor or the hybrid/EV battery high-resolution current sensor value is between -20 and +20 A.
- None of the following DTCs are set: P0AC1, P0AC2, P1EBA and P1A07, P0B10, P0B11, P1EBB.

P1EBA and P1EBB

- Runs during battery energy control module initialisation.
- The 12 V battery voltage is greater than or equal to 9 V.
- The high-voltage main and charger contactors are open (during wake-up).
- DTC P1A07 is not set.

Conditions for Setting the DTC

P0AC1

The battery energy control module detects that the hybrid/EV battery pack current sensor low resolution is less than -470 A.

P0AC2

The battery energy control module detects that the hybrid/EV battery pack current sensor low resolution is greater than +280 A.

P0B10

The battery energy control module detects that the hybrid/EV battery pack current sensor high resolution is less than -23 A.

P0B11

The battery energy control module detects that the hybrid/EV battery pack current sensor high resolution is greater than +23 A.

P0B13

The difference between the Hybrid/EV Battery's low-resolution current sensor value and its high-resolution current sensor value is greater than 10 A.

P1EBA

The battery energy control module detects that the Pack Current Low-Resolution Offset is greater than the calibration Low- Resolution Offset of 8 A.

P1EBB

The battery energy control module detects that the Pack Current High-Resolution Offset is greater than the calibration High- Resolution Offset of 2.5 A.

Action Taken When the DTC Sets

- DTC P0AC1, P0AC2, P0B10, P0B11, P0B13, P1EBA and P1EBB are type A DTCs.
- The driver information centre (DIC) displays the SERVICE HYBRID SYSTEM message.
- If any of these DTCs are set, the vehicle will operate in a reduced power mode and electric only engine ON.
- The contactors may open at any time.

Conditions for Clearing the DTC

DTC P0AC1, P0AC2, P0B10, P0B11, P0B13, P1EBA and P1EBB are type A DTCs.

Reference Information

Schematic Reference

Hybrid Energy Storage Schematics

Connector End View Reference

Component Connector End Views

Description and Operation

Drive Motor Battery System Description

Electrical Information Reference

- Circuit Testing
- Connector Repairs
- Testing for Intermittent Conditions and Poor Connections
- Wiring Repairs

DTC Type Reference

Powertrain Diagnostic Trouble Code (DTC) Type Definitions

Scan Tool Reference

Control Module References for scan tool information

Special Tools

- *EL-48900* HEV Safety Kit
- *EL-50211* Low-Voltage Jumper Harness Extension

For equivalent regional tools, refer to Special Tools .

Circuit/System Verification

Ignition ON, observe the scan tool Hybrid/EV Battery Pack Low Resolution Current Sensor parameter. The reading should be between -470 and +280 A, and change with the amount of current draw on the hybrid/EV battery pack. Observe the scan tool Hybrid/EV Battery Pack High-Resolution Current Sensor parameter. The reading should be between -23 and +23 A, and change with the amount of current draw on the hybrid/EV battery pack. Typical current sensor reading in a parked vehicle with the ignition ON and all accessories OFF, is between 1 and 10 A.

Circuit/System Testing

Danger: High voltage enabling and disabling shall be only performed by High Voltage Qualified Technicians. The procedures for high-voltage enabling/disabling can be found in the service instructions and must be strictly followed at all times. The usage of the Protocol High Voltage Disabling/Enabling is mandatory. The High-Voltage Qualified Technician is responsible for the adherence to the manufacturer's service instructions as well as current national legal regulations.

Failure to follow the procedures exactly as written may result in serious injury or death.

Questions regarding training can be answered by your national training centre.

Danger: Any hybrid/EV battery pack replacement shall be performed by High-Voltage Qualified Technicians only. The replacement procedure can be found in the service

instruction and must be strictly followed at all times. The High-Voltage Qualified Technician is responsible for adherence to the manufacturer's service instructions as well as current national legal regulations. If the hybrid/EV battery pack needs to be replaced contact the Technical Assistance Centre for further instructions prior to removal of the battery pack.

1. Verify that no other DTCs are set.
   If any other DTCs are set, refer to Diagnostic Trouble Code (DTC) List - Vehicle .
2. If DTC P0AC1, P0AC2, P0B10, P0B11, P0B13, P1EBA or P1EBB is set, replace the A4 hybrid/EV battery pack.

Repair Instructions

Perform the Diagnostic Repair Verification after completing the repair.

- Drive Motor Battery Replacement and Shipping Preparation
- Control Module References for battery energy control module replacement, programming and set-up for the hybrid/EV battery pack replacement.

&#169© Copyright Chevrolet. All rights reserved

DTC P0AF8

Diagnostic Instructions

- Perform the Diagnostic System Check - Vehicle prior to using this diagnostic procedure.
- Review Strategy Based Diagnosis for an overview of the diagnostic approach.
- Diagnostic Procedure Instructions provides an overview of each diagnostic category.

DTC Descriptor

DTC P0AF8: Hybrid System Voltage

Circuit/System Description

The drive motor battery contains 288 cells. Groups of three cells are welded together in parallel. There are a total of 96 cell groups in the drive motor battery assembly. These cell groups are electrically connected in-series. Each individual cell group is rated at 3.7 V, for a nominal system voltage of 355 V direct current. The battery cells are also grouped together into three sections. The first 90 cells/30 cell groups make up battery section one. This section is adjacent to the cowl and contains batteries 67 through to 96. Battery section two is located behind section one. It is made up of 72 cells/24 cell groups and contains batteries 43 through to 66. The transverse battery section is section number three, it is made up of the remaining 126 cells/42 cell groups and contains batteries 1 through to 42. The three battery sections are individually serviceable components.

The battery energy control module monitors the voltage of the 96 battery cell groups through the four drive motor battery high- voltage interface controllers. Voltage sense lines are attached to each individual cell group, and these sense lines terminate at a connector located on the top surface of the battery section. A serviceable voltage sense harness joins this connector to a drive motor battery high-voltage interface control module, also located on the top surface of the battery section. The drive motor battery high-voltage interface control module encodes the voltage reading and transmits it to the battery energy control module through the battery control harness. There is one drive motor battery high-voltage interface control module located on battery sections one and two, and two drive motor battery high-voltage interface control modules associated with battery section three. The drive motor battery high-voltage interface control module, voltage sense harnesses, battery control harness and battery energy control module are all considered serviceable components.

The battery energy control module will determine when a fault condition is present. Diagnostics and system status are communicated from the battery energy control module to hybrid powertrain control module 2 through serial data. The hybrid powertrain control module 2 is the host controller for diagnostic trouble code information.

Conditions for Running the DTC

- The hybrid/EV battery main contactors are closed.
- None of the following DTCs are set; P0ABB, P0ABC, P0ABD, P1A07, P1AE8, P1AE9, P1AEA, P1AEB, P1AEC, P1AED, P1AE20 P1AE27 or P1E28.

OR

- The hybrid/EV battery main contactors are open.
- The charger contactors are closed.
- The multi-function contactor is closed.
- None of the following DTCs are set; P0ABB, P0ABC, P0ABD, P0D4E, P0D4F, P0D5C, P16C5, P1A07, P1EEB, P1EEC or P1ECE.

Conditions for Setting the DTC

- The difference between the Hybrid/EV Battery pack voltage and the hybrid powertrain control module bus voltage is greater than 12 V.
  OR
- The difference between the Hybrid/EV Battery pack voltage and the charger module's bus voltage is greater than 12 V.

Action Taken When the DTC Sets

DTC P0AF8 is a type A DTC.

Conditions for Clearing the DTC

- DTC P0AF8 is a type A DTC.
- The Clear Secured High-Voltage DTCs reset function must be performed to prevent resetting the DTC.

Diagnostic Aids

An open charger fuse may cause P0AF8 to set.

Reference Information

Schematic Reference

Hybrid Energy Storage Schematics

Connector End View Reference

Component Connector End Views

Description and Operation

Drive Motor Battery System Description

Electrical Information Reference

- Circuit Testing
- Connector Repairs
- Testing for Intermittent Conditions and Poor Connections
- Wiring Repairs

DTC Type Reference

Powertrain Diagnostic Trouble Code (DTC) Type Definitions

Scan Tool Reference

Control Module References for scan tool information

Special Tools

EL-48900 HEV Safety Kit

For equivalent regional tools, refer to Special Tools .

Circuit/System Verification

1. Verify that no other DTCs are set.
   If any of the DTCs are set, refer to Diagnostic Trouble Code (DTC) List - Vehicle .
2. Clear the P0AF8 and perform the Clear Secured High Voltage DTCs reset function. Refer to Clear Secured High-Voltage DTCs .
3. Put the vehicle into Charge Mode by plugging in the wall charger.
4. Observe the hybrid powertrain control module 2 Battery Charger High-Output parameter and the hybrid/EV battery energy control module Hybrid Battery Pack Terminal 1 Voltage parameter. Each reading should be within 12 V of each other and DTC P0AF8 did not reset.
   If readings are not within 12 V of each other or the DTC is set, refer to Battery Charger Bus Diagnostics.
   If readings are within 12 V of each other and the DTC is not set, refer to Battery Main Bus Diagnostics.

Circuit/System Testing

Danger: High voltage enabling and disabling shall be only performed by High Voltage Qualified Technicians. The procedures for high-voltage enabling/disabling can be found

in the service instructions and must be strictly followed at all times. The usage of the Protocol High Voltage Disabling/Enabling is mandatory. The High-Voltage Qualified Technician is responsible for the adherence to the manufacturer's service instructions as well as current national legal regulations.

Failure to follow the procedures exactly as written may result in serious injury or death.

Questions regarding training can be answered by your national training centre.

Danger: Any hybrid/EV battery pack replacement shall be performed by High-Voltage Qualified Technicians only. The replacement procedure can be found in the service instruction and must be strictly followed at all times. The High-Voltage Qualified Technician is responsible for adherence to the manufacturer's service instructions as well as current national legal regulations. If the hybrid/EV battery pack needs to be replaced contact the Technical Assistance Centre for further instructions prior to removal of the battery pack.

Battery Charger Bus Diagnostics

1. Ignition OFF, disable the high voltage at the T18 Battery Charger. Refer to High Voltage Disabling .
2. Disconnect the X7 harness connector at the A28 hybrid/EV battery contactor assembly.
3. Disconnect the X5 harness connector at the A28 hybrid/EV battery contactor assembly.
4. Test for infinite resistance between the terminals listed below:
   - High-voltage DC (-360 V) negative terminal B X5 harness connector at the A28 hybrid/EV battery contactor assembly to vehicle chassis earth.
   - High-voltage DC (+360 V) positive terminal A X5 harness connector at the A28 hybrid/EV battery contactor assembly to vehicle chassis earth.
   - High-voltage DC (+360 V) positive terminal A X5 harness connector at the A28 hybrid/EV battery contactor assembly and the high-voltage DC (-360 V) negative terminal B X5 harness connector at the A28 hybrid/EV battery contactor assembly.
     If less than the specified value, replace the high-voltage DC cables. After the repair is complete with a scan tool, the Clear Secured High-Voltage DTCs reset function must be performed.
5. Test for less than 10 Ω between the terminals listed below:
   - High-voltage DC (-360 V) negative terminal B X4 harness connector at the T18 Battery Charger and the high voltage DC (-360 V) negative terminal B X5 harness connector at the A28 hybrid/EV battery contactor assembly.
   - High-voltage DC (+360 V) positive terminal A X4 harness connector at the T18 Battery Charger and the high- voltage DC (+360 V) negative terminal A X5 harness connector at the A28 hybrid/EV battery contactor assembly.
     If greater than the specified value, replace the high-voltage DC cables. After the repair is complete with a scan tool, the Clear Secured High-Voltage DTCs reset function must be performed.
6. If all circuits test normal, replace the T18 Battery Charger. If the DTC resets, replace the A4 hybrid/EV battery pack assembly.

Battery Main Bus Diagnostics

1. Ignition OFF, disable the high voltage at the T6 Power Inverter Module Assembly. Refer to High Voltage Disabling .
2. Disconnect the F118 hybrid battery pack connector jumper connector at the A28 hybrid/EV battery contactor assembly.
3. Disconnect the X3 harness connector at the A28 hybrid/EV battery contactor assembly.
4. Test for infinite resistance between the terminals listed below:
   - High-voltage DC (-360 V) negative terminal B X3 harness connector at the A28 hybrid/EV battery contactor assembly to vehicle chassis earth.

- High-voltage DC (+360 V) positive terminal A X3 harness connector at the A28 hybrid/EV battery contactor assembly to vehicle chassis earth.
- High-voltage DC (+360 V) positive terminal A X3 harness connector at the A28 hybrid/EV battery contactor assembly and the high-voltage DC (-360 V) negative terminal B X3 harness connector at the A28 hybrid/EV battery contactor assembly.
  If less than the specified value, replace the high-voltage DC cables. After the repair is complete with a scan tool, the Clear Secured High-Voltage DTCs reset function must be performed.

5. Test for less than 10 Ω between the terminals listed below:
   - High-voltage DC (-360 V) negative terminal B X3 harness connector at the A28 hybrid/EV battery contactor assembly and the high-voltage DC (-360 V) negative terminal B X3 harness connector at the T6 Power Inverter Module Assembly.
   - High-voltage DC (+360 V) positive terminal A X3 harness connector at the A28 hybrid/EV battery contactor assembly and the high-voltage DC (+360 V) negative terminal A X3 harness connector at the T6 Power Inverter Module Assembly.
     If greater than the specified value, replace the high-voltage DC cables. After the repair is complete with a scan tool, the Clear Secured High-Voltage DTCs reset function must be performed.
6. If all circuits test normal, replace the T6 Power Inverter Module Assembly. If the DTC resets, replace the A4 hybrid/EV battery pack assembly.

Repair Instructions

Perform the Diagnostic Repair Verification after completing the repair.

- Drive Motor Battery Replacement and Shipping Preparation
- Control Module References for battery energy control module replacement, programming and set-up for the hybrid/EV battery pack replacement.

&#169© Copyright Chevrolet. All rights reserved

DTC P0AFA or P0AFB

Diagnostic Instructions

- Perform the Diagnostic System Check - Vehicle prior to using this diagnostic procedure.
- Review Strategy Based Diagnosis for an overview of the diagnostic approach.
- Diagnostic Procedure Instructions provides an overview of each diagnostic category.

DTC Descriptors

DTC P0AFA: Hybrid/EV Battery System Voltage Low

DTC P0AFB: Hybrid/EV Battery System Voltage High

Circuit/System Description

The battery energy control module will diagnose its own systems and determine when a fault condition is present. Diagnostics and system status is communicated from the battery energy control module to the hybrid powertrain control module 2 through serial data. The hybrid powertrain control module 2 is the host controller for diagnostic trouble code (DTC) information. The battery energy control module monitors the hybrid/EV battery voltage at the battery side of the high-voltage main contactors.

Conditions for Running the DTC

- The battery energy control module is awake and communicating.
- The system voltage is 9 V.
- None of the following DTCs are set; P0ABC, P0ABD, P1A07, P0AF8, P0ABB, P0B3D, P0B42, P0B47, P0B4C, P0B51, P0B56, P0B5B, P0B60, P0B65, P0B6A, P0B6F, P0B74, P0B79, P0B7E, P0B83, P0B88, P0B8D, P0B92, P0B97, P0B9C, P0BA1, P0BA6, P0BAB, P0BB0, P0BB5, P0BBA, P1B17, P1B1A, P1B1D, P1B20, P1B23, P1B26, P1B46, P1B49, P1B4C, P1B4F, P1B52, P1B55, P1B58, P1B5B, P1B5E, P1B61, P1B64, P1B67, P1B6A, P1B6D, P1B70, P1B73, P1B76, P1B79, P1B7C, P1B7F, P1B82, P1B85, P1B88, P1B8B, P1B8E, P1B91, P1B94, P1B97, P1B9A, P1B9D, P1BA0, P1BA3, P1BA6, P1BA9, P1BAC, P1BAF, P1BB2, P1BB5, P1BB8, P1BBB, P1BBE, P1BC1, P1BC4, P1BC7, P1BCA, P1BCD, P1BD0, P1BD3, P1BD6, P1BD9, P1BDC, P1BDF, P1BE2, P1BE5, P1BE8, P1BEB, P1BEE, P1BF1, P1BF4, P1BF7, P1BFA, P1BFD, P1E02, P1E05, P0B3E, P0B43, P0B48, P0B4D, P0B52, P0B57, P0B5C, P0B61, P0B66, P0B6B, P0B70, P0B75, P0B7A, P0B7F, P0B84, P0B89, P0B8E, P0B93, P0B98, P0B9D, P0BA2, P0BA7, P0BAC, P0BB1, P0BB6, P0BBB, P1B18, P1B1B, P1B1E, P1B21, P1B24, P1B27, P1B47, P1B4A, P1B4D, P1B50, P1B53, P1B56, P1B59, P1B5C, P1B5F, P1B62, P1B65, P1B68, P1B6B, P1B6E, P1B71, P1B74, P1B77, P1B7A, P1B7D, P1B80, P1B83, P1B86, P1B89, P1B8C, P1B8F, P1B92, P1B95, P1B98, P1B9B, P1B9E, P1BA1, P1BA4, P1BA7, P1BAA, P1BAD, P1BB0, P1BB3, P1BB6, P1BB9, P1BBC, P1BBF, P1BC2, P1BC5,

P1BC8, P1BCB, P1BCE, P1BD1, P1BD4, P1BD7, P1BDA, P1BDD, P1BE0, P1BE3, P1BE6, P1BE9, P1BEC, P1BEF, P1BF2, P1BF5, P1BF8, P1BFB, P1BFE, P1E03, P1E06, P1E90, P1E8F, P1E91, P1E8E, P1E93, P1E96, P1E95, P1E97, P1E94, P1E99, P1E9C, P1E9B, P1E9D, P1E9A, P1E9F, P1EA2, P1EA1, P1EA3, P1EA0, P1EA5, P1EB1, P1EB5, P0B3B, P0B40, P0B45, P0B4A, P0B4F, P0B54, P0B59, P0B5E, P0B63, P0B68, P0B6D, P0B77, P0B7C, P0B81, P0B86, P0B8B, P0B95, P0B9A, P0B9F, P0BA4, P0BA9, P0BAE, P0BB3, P0BB8, P1B28, P1B29, P1B2A, P1B2B, P1B2C, P1B2D, P1E4C, P1E4D, P1E4E, P1E4F, P1E50, P1E51, P1E52, P1E53, P1E54, P1E56, P1E57, P1E58, P1E59, P1E5A, P1E5B, P1E5C, P1E5D, P1E5E, P1E5F, P1E60, P1E61, P1E62, P1E63, P1E64, P1E65, P1E66, P1E67, P1E68, P1E69, P1E6A, P1E6B, P1E6C, P1E6E, P1E6F, P1E70, P1E71, P1E72, P1E73, P1E74, P1E75, P1E76, P1E77, P1E78, P1E79, P1E7A, P1E7B, P1E7C, P1E7D, P1E7E, P1E7F, P1E80, P1E81, P1E82, P1E83, P1E84, P1E86, P1E87, P1E88, P1E89, P1E8A, P0B3C, P0B41, P0B46, P0B4B, P0B50, P0B55, P0B5A, P0B5F, P0B64, P0B69, P0B6E, P0B73, P0B78, P0B7D, P0B82, P0B87, P0B8C, P0B91, P0B96, P0B9B, P0BA0, P0BA5, P0BAA, P0BAF, P0BB4, P0BB9, P1B16, P1B19, P1B1C, P1B1F, P1B22, P1B25, P1B45, P1B48, P1B4B, P1B4E, P1B51, P1B54, P1B57, P1B5A, P1B5D, P1B60, P1B63, P1B66, P1B69, P1B6C, P1B6F, P1B72, P1B75, P1B78, P1B7B, P1B7E, P1B81, P1B84, P1B87, P1B8A, P1B8D, P1B90, P1B93, P1B96, P1B99, P1B9C, P1B9F, P1BA2, P1BA5, P1BA8, P1BAB, P1BAE, P1BB1, P1BB4, P1BB7, P1BBA, P1BBD, P1BC0, P1BC3, P1BC6, P1BC9, P1BCC, P1BCF, P1BD2, P1BD5, P1BD8, P1BDB, P1BDE, P1BE1, P1BE4, P1BE7, P1BEA, P1BED, P1BF0, P1BF3, P1BF6, P1BF9, P1BFC, P1E01 and P1E04

Conditions for Setting the DTC

P0AFA

The Hybrid Battery Pack Voltage is less than 205 V.

OR

The Minimum Hybrid Battery Cell Group Voltage in the hybrid battery is less than 2.05 V.

P0AFB

The Hybrid Battery Pack Voltage is greater than 419 V.

OR

The Maximum Hybrid Battery Cell Group Voltage in the hybrid battery is greater than 4.4 V.

Action Taken When the DTC Sets

- DTCs P0AFA and P0AFB are type A DTCs.
- If any of these DTCs are set, the vehicle will operate in a reduced power mode and charge sustaining mode.
- Once Vehicle Power has been turned OFF all of the contactors will be prevented from closing.

Conditions for Clearing the DTC

P0AFA and P0AFB

- DTCs P0AFA and P0AFB are type A DTCs.
- The Clear Secured High-Voltage DTCs reset function must be performed with a scan tool before clear codes.

Reference Information

Schematic Reference

Hybrid Energy Storage Schematics

Connector End View Reference

Component Connector End Views

Description and Operation

Drive Motor Battery System Description

Electrical Information Reference

- Circuit Testing
- Connector Repairs
- Testing for Intermittent Conditions and Poor Connections
- Wiring Repairs

DTC Type Reference

Powertrain Diagnostic Trouble Code (DTC) Type Definitions

Scan Tool Reference

Control Module References for scan tool information

Special Tools

- *EL-48571-25* High-Voltage Battery Pin Out Box
- *EL-48900* HEV Safety Kit

For equivalent regional tools, refer to Special Tools .

Circuit/System Verification

1. Verify that DTC P0AA1, P0AD9, P0ADD, P0AE2, P0AE4, P0B3B, P0B3C, P0B3D, P0B3E, P0B40, P0B41, P0B42, P0B43, P0B45, P0B46, P0B47, P0B48, P0B4A, P0B4B, P0B4D, P0B4C, P0B4F, P0B50, P0B51, P0B52, P0B54, P0B55, P0B56, P0B57, P0B59, P0B5A, P0B5B, P0B5C, P0B5E, P0B60, P0B5F, P0B61, P0B63, P0B64, P0B65, P0B66, P0B69, P0B68, P0B6A, P0B6D, P0B6B, P0B6E, P0B70, P0B6F, P0B72, P0B74, P0B73, P0B75, P0B77, P0B78, P0B79, P0B7A, P0B7D, P0B7C, P0B7E, P0B7F, P0B81, P0B82, P0B83, P0B84, P0B86, P0B87, P0B88, P0B89, P0B8B, P0B8C, P0B8D, P0B8E, P0B90, P0B91, P0B92, P0B93, P0B95, P0B96, P0B97, P0B98, P0B9A, P0B9B, P0B9C, P0B9D, P0B9F, P0BA1, P0BA0, P0BA2, P0BA4, P0BA5, P0BA6, P0BA7, P0BA9, P0BAA, P0BAB, P0BAC, P0BAE, P0BAF, P0BB0 ,P0BB1, P0BB3, P0BB4, P0BB5, P0BB6, P0BB8, P0BB9, P0BBA, P0BBB, P0D0A, P0D11, P1B16, P1B17, P1B18, P1B19, P1B1A, P1B1B, P1B1C, P1B1D, P1B1E, P1B1F, P1B20, P1B21, P1B22, P1B23, P1B24, P1B25, P1B26, P1B27, P1B28, P1B29, P1B2B, P1B2A, P1B2C, P1B2D, P1B45, P1B46, P1B47, P1B48, P1B49, P1B4A, P1B4B, P1B4C, P1B4D, P1B4E, P1B4F, P1B50, P1B51, P1B52, P1B53, P1B54, P1B55, P1B56, P1B57, P1B58, P1B59, P1B5A, P1B5B, P1B5C, P1B5D, P1B5E, P1B5F, P1B60 ,P1B61 ,P1B62, P1B63, P1B64, P1B65, P1B66, P1B67, P1B68, P1B69, P1B6A, P1B6B, P1B6C, P1B6D, P1B6E, P1B6F, P1B70, P1B71, P1B72, P1B73, P1B74, P1B75, P1B76, P1B77, P1B78, P1B79, P1B7A, P1B7B, P1B7C, P1B7D, P1B7F, P1B7E, P1B80, P1B81, P1B82, P1B83, P1B84, P1B85, P1B86, P1B87, P1B88, P1B89, P1B8A, P1B8B, P1B8C, P1B8D, P1B8E, P1B8F, P1B90, P1B91, P1B92, P1B93, P1B94, P1B95, P1B97, P1B96, P1B98, P1B99, P1B9A, P1B9B, P1B9C, P1B9D, P1B9E, P1B9F, P1BA0, P1BA1, P1BA2, P1BA3, P1BA4, P1BA5, P1BA6, P1BA7, P1BA8, P1BA9 ,P1BAB, P1BAA, P1BAC, P1BAD, P1BAE, P1BAF, P1BB0, P1BB1, P1BB2, P1BB3, P1BB4, P1BB5, P1BB6, P1BB7, P1BB8, P1BB9, P1BBA, P1BBB, P1BBC, P1BBD, P1BBE, P1BBF, P1BC0, P1BC1, P1BC2, P1BC3, P1BC4, P1BC5, P1BC6, P1BC7, P1BC8, P1BC9, P1BCA, P1BCB, P1BCC, P1BCE, P1BCD, P1BCF, P1BD0, P1BD2, P1BD1, P1BD3, P1BD4, P1BD5, P1BD6, P1BD7, P1BD8, P1BD9, P1BDA, P1BDB, P1BDD, P1BDC, P1BDE, P1BDF, P1BE1, P1BE0, P1BE3, P1BE2, P1BE4, P1BE5, P1BE6, P1BE7, P1BE8, P1BE9, P1BEA, P1BEB, P1BEC, P1BED, P1BEE, P1BF0, P1BEF, P1BF1, P1BF2, P1BF4, P1BF3, P1BF5, P1BF4, P1BF7, P1BF8, P1BF9, P1BFA, P1BFB, P1BFC, P1BFD, P1BFE, P1E01, P1E02, P1E03, P1E04, P1E05, P1E06, P1E4C, P1E4D, P1E4E, P1E4F, P1E50, P1E51, P1E52, P1E53, P1E54, P1E55, P1E56, P1E57, P1E58, P1E59, P1E5A, P1E5B, P1E5C, P1E5D, P1E5E, P1E5F, P1E60, P1E62, P1E61, P1E63, P1E64, P1E65, P1E66, P1E67, P1E68, P1E69, P1E6A, P1E6B, P1E6D, P1E6C, P1E6E, P1E6F, P1E70, P1E71, P1E72, P1E73, P1E74, P1E76, P1E75, P1E77, P1E78, P1E79, P1E7A, P1E7B, P1E7C, P1E7D, P1E7E, P1E7F, P1E80, P1E81, P1E82, P1E83, P1E84, P1E85, P1E86, P1E87, P1E88, P1E89, P1E8A, P1EBC, P1EBD, P1EBF, P1EC0, P1EC3, P1EC4, P1EC5, U2603, U2604, U2605, U2606 or U2401 is not set.
   If any of the DTCs are set, refer to Diagnostic Trouble Code (DTC) List - Vehicle .
2. Ignition ON, engine OFF, verify that the scan tool Hybrid Battery Pack Terminal 1 Voltage parameter is between 205-419 V.
3. Observe the scan tool Hybrid Battery 1-96 voltage parameters. Each reading should be between 3.0-4.1 V and all readings should be within 0.1 V of each other.

Circuit/System Testing

Danger: High voltage enabling and disabling shall be only performed by High Voltage Qualified Technicians. The procedures for high-voltage enabling/disabling can be found in the service instructions and must be strictly followed at all times. The usage of the Protocol High Voltage Disabling/Enabling is mandatory. The High-Voltage Qualified Technician is responsible for the adherence to the manufacturer's service instructions as well as current national legal regulations.

Failure to follow the procedures exactly as written may result in serious injury or death.

Questions regarding training can be answered by your national training centre.

Danger: Any hybrid/EV battery pack replacement shall be performed by High-Voltage Qualified Technicians only. The replacement procedure can be found in the service instruction and must be strictly followed at all times. The High-Voltage Qualified Technician is responsible for adherence to the manufacturer's service instructions as well as current national legal regulations. If the hybrid/EV battery pack needs to be replaced contact the Technical Assistance Centre for further instructions prior to removal of the battery pack.

1. Verify that no other DTCs are set.
   If any other DTCs are set, refer to Diagnostic Trouble Code (DTC) List - Vehicle .
2. If DTC P0AFA or P0AFB is set, replace the A4 hybrid/EV battery pack.

Repair Instructions

Perform the Diagnostic Repair Verification after completing the repair.

- Drive Motor Battery Replacement and Shipping Preparation
- Control Module References for battery energy control module and hybrid interface control battery module 1-4 replacement, programming and set-up for the hybrid/EV battery pack replacement.

&#169© Copyright Chevrolet. All rights reserved

DTC P0B3B-P0BBB, P1B16-P1B2D, P1B45-P1BFE, P1E01-P1E06 or P1E4C-P1E8A

Diagnostic Instructions

- Perform the Diagnostic System Check - Vehicle prior to using this diagnostic procedure.
- Review Strategy Based Diagnosis for an overview of the diagnostic approach.
- Diagnostic Procedure Instructions provides an overview of each diagnostic category.

DTC Descriptors

DTC P0B3B: Hybrid/EV Battery 1 Circuit

DTC P0B3C: Hybrid/EV Battery 1 Circuit Performance

DTC P0B3D: Hybrid/EV Battery 1 Circuit Low Voltage

DTC P0B3E: Hybrid/EV Battery 1 Circuit High Voltage

DTC P0B40: Hybrid/EV Battery 2 Circuit

DTC P0B41: Hybrid/EV Battery 2 Circuit Performance

DTC P0B42: Hybrid/EV Battery 2 Circuit Low Voltage

DTC P0B43: Hybrid/EV Battery 2 Circuit High Voltage

DTC P0B45: Hybrid/EV Battery 3 Circuit

DTC P0B46: Hybrid/EV Battery 3 Circuit Performance

DTC P0B47: Hybrid/EV Battery 3 Circuit Performance

DTC P0B48: Hybrid/EV Battery 3 Circuit High Voltage

DTC P0B4A: Hybrid/EV Battery 4 Circuit

DTC P0B4B: Hybrid/EV Battery 4 Circuit Performance

DTC P0B4C: Hybrid/EV Battery 4 Circuit Low Voltage

DTC P0B4D: Hybrid/EV Battery 4 Circuit High Voltage

DTC P0B4F: Hybrid/EV Battery 5 Circuit

DTC P0B50: Hybrid/EV Battery 5 Circuit Performance

DTC P0B51: Hybrid/EV Battery 5 Circuit Low Voltage

DTC P0B52: Hybrid/EV Battery 5 Circuit High Voltage

DTC P0B54: Hybrid/EV Battery 6 Circuit

DTC P0B55: Hybrid/EV Battery 6 Circuit Performance

DTC P0B56: Hybrid/EV Battery 6 Circuit Low Voltage

DTC P0B57: Hybrid/EV Battery 6 Circuit High Voltage

DTC P0B59: Hybrid/EV Battery 7 Circuit

DTC P0B5A: Hybrid/EV Battery 7 Circuit Performance

DTC P0B5B: Hybrid/EV Battery 7 Circuit Low Voltage

DTC P0B5C: Hybrid/EV Battery 7 Circuit High Voltage

DTC P0B5E: Hybrid/EV Battery 8 Circuit

DTC P0B5F: Hybrid/EV Battery 8 Circuit Performance

DTC P0B60: Hybrid/EV Battery 8 Circuit Low Voltage

DTC P0B61: Hybrid/EV Battery 8 Circuit High Voltage

DTC P0B63: Hybrid/EV Battery 9 Circuit

DTC P0B64: Hybrid/EV Battery 9 Circuit Performance

DTC P0B65: Hybrid/EV Battery 9 Circuit Low Voltage

DTC P0B66: Hybrid/EV Battery 9 Circuit High Voltage

DTC P0B68: Hybrid/EV Battery 10 Circuit

DTC P0B69: Hybrid/EV Battery 10 Circuit Performance

DTC P0B6A: Hybrid/EV Battery 10 Circuit Low Voltage

DTC P0B6B: Hybrid/EV Battery 10 Circuit High Voltage

DTC P0B6D: Hybrid/EV Battery 11 Circuit

DTC P0B6E: Hybrid/EV Battery 11 Circuit Performance

DTC P0B6F: Hybrid/EV Battery 11 Circuit Low Voltage

DTC P0B70: Hybrid/EV Battery 11 Circuit High Voltage

DTC P0B72: Hybrid/EV Battery 12 Circuit

DTC P0B73: Hybrid/EV Battery 12 Circuit Performance

DTC P0B74: Hybrid/EV Battery 12 Circuit Low Voltage

DTC P0B75: Hybrid/EV Battery 12 Circuit High Voltage

DTC P0B77: Hybrid/EV Battery 13 Circuit

DTC P0B78: Hybrid/EV Battery 13 Circuit Performance

DTC P0B79: Hybrid/EV Battery 13 Circuit Low Voltage

DTC P0B7A: Hybrid/EV Battery 13 Circuit High Voltage

DTC P0B7C: Hybrid/EV Battery 14 Circuit

DTC P0B7D: Hybrid/EV Battery 14 Circuit Performance

DTC P0B7E: Hybrid/EV Battery 14 Circuit Low Voltage

DTC P0B7F: Hybrid/EV Battery 14 Circuit High Voltage

DTC P0B81: Hybrid/EV Battery 15 Circuit

DTC P0B82: Hybrid/EV Battery 15 Circuit Performance

DTC P0B83: Hybrid/EV Battery 15 Circuit Low Voltage

DTC P0B84: Hybrid/EV Battery 15 Circuit High Voltage

DTC P0B86: Hybrid/EV Battery 16 Circuit

DTC P0B87: Hybrid/EV Battery 16 Circuit Performance

DTC P0B88: Hybrid/EV Battery 16 Circuit Low Voltage

DTC P0B89: Hybrid/EV Battery 16 Circuit High Voltage

DTC P0B8B: Hybrid/EV Battery 17 Circuit

DTC P0B8C: Hybrid/EV Battery 17 Circuit Performance

DTC P0B8D: Hybrid/EV Battery 17 Circuit Low Voltage

DTC P0B8E: Hybrid/EV Battery 17 Circuit High Voltage

DTC P0B90: Hybrid/EV Battery 18 Circuit

DTC P0B91: Hybrid/EV Battery 18 Circuit Performance

DTC P0B92: Hybrid/EV Battery 18 Circuit Low Voltage

DTC P0B93: Hybrid/EV Battery 18 Circuit High Voltage

DTC P0B95: Hybrid/EV Battery 19 Circuit

DTC P0B96: Hybrid/EV Battery 19 Circuit Performance

DTC P0B97: Hybrid/EV Battery 19 Circuit Low Voltage

DTC P0B98: Hybrid/EV Battery 19 Circuit High Voltage

DTC P0B9A: Hybrid/EV Battery 20 Circuit

DTC P0B9B: Hybrid/EV Battery 20 Circuit Performance

DTC P0B9C: Hybrid/EV Battery 20 Circuit Low Voltage

DTC P0B9D: Hybrid/EV Battery 20 Circuit High Voltage

DTC P0B9F: Hybrid/EV Battery 21 Circuit

DTC P0BA0: Hybrid/EV Battery 21 Circuit Performance

DTC P0BA1: Hybrid/EV Battery 21 Circuit Low Voltage

DTC P0BA2: Hybrid/EV Battery 21 Circuit High Voltage

DTC P0BA4: Hybrid/EV Battery 22 Circuit

DTC P0BA5: Hybrid/EV Battery 22 Circuit Performance

DTC P0BA6: Hybrid/EV Battery 22 Circuit Low Voltage

DTC P0BA7: Hybrid/EV Battery 22 Circuit High Voltage

DTC P0BA9: Hybrid/EV Battery 23 Circuit

DTC P0BAA: Hybrid/EV Battery 23 Circuit Performance

DTC P0BAB: Hybrid/EV Battery 23 Circuit Low Voltage

DTC P0BAC: Hybrid/EV Battery 23 Circuit High Voltage

DTC P0BAE: Hybrid/EV Battery 24 Circuit

DTC P0BAF: Hybrid/EV Battery 24 Circuit Performance

DTC P0BB0: Hybrid/EV Battery 24 Circuit Low Voltage

DTC P0BB1: Hybrid/EV Battery 24 Circuit High Voltage

DTC P0BB3: Hybrid/EV Battery 25 Circuit

DTC P0BB4: Hybrid/EV Battery 25 Circuit Performance

DTC P0BB5: Hybrid/EV Battery 25 Circuit Low Voltage

DTC P0BB6: Hybrid/EV Battery 25 Circuit High Voltage

DTC P0BB8: Hybrid/EV Battery 26 Circuit

DTC P0BB9: Hybrid/EV Battery 26 Circuit Performance

DTC P0BBA: Hybrid/EV Battery 26 Circuit Low Voltage

DTC P0BBB: Hybrid/EV Battery 26 Circuit High Voltage

DTC P1B16: Hybrid/EV Battery 27 Circuit Performance

DTC P1B17: Hybrid/EV Battery 27 Circuit Low Voltage

DTC P1B18: Hybrid/EV Battery 27 Circuit High Voltage

DTC P1B19: Hybrid/EV Battery 28 Circuit Performance

DTC P1B1A: Hybrid/EV Battery 28 Circuit Low Voltage

DTC P1B1B: Hybrid/EV Battery 28 Circuit High Voltage

DTC P1B1C: Hybrid/EV Battery 29 Circuit Performance

DTC P1B1D: Hybrid/EV Battery 29 Circuit Low Voltage

DTC P1B1E: Hybrid/EV Battery 29 Circuit High Voltage

DTC P1B1F: Hybrid/EV Battery 30 Circuit Performance

DTC P1B20: Hybrid/EV Battery 30 Circuit Low Voltage

DTC P1B21: Hybrid/EV Battery 30 Circuit High Voltage

DTC P1B22: Hybrid/EV Battery 31 Circuit Performance

DTC P1B23: Hybrid/EV Battery 31 Circuit Low Voltage

DTC P1B24: Hybrid/EV Battery 31 Circuit High Voltage

DTC P1B25: Hybrid/EV Battery 32 Circuit Performance

DTC P1B26: Hybrid/EV Battery 32 Circuit Low Voltage

DTC P1B27: Hybrid/EV Battery 32 Circuit High Voltage

DTC P1B28: Hybrid/EV Battery 27 Circuit

DTC P1B29: Hybrid/EV Battery 28 Circuit

DTC P1B29: Hybrid/EV Battery 29 Circuit

DTC P1B2B: Hybrid/EV Battery 30 Circuit

DTC P1B2C: Hybrid/EV Battery 31 Circuit

DTC P1B2D: Hybrid/EV Battery 32 Circuit

DTC P1B45: Hybrid/EV Battery 33 Circuit Performance

DTC P1B46: Hybrid/EV Battery 33 Circuit Low Voltage

DTC P1B47: Hybrid/EV Battery 33 Circuit High Voltage

DTC P1B48: Hybrid/EV Battery 34 Circuit Performance

DTC P1B49: Hybrid/EV Battery 34 Circuit Low Voltage

DTC P1B4A: Hybrid/EV Battery 34 Circuit High Voltage

DTC P1B4B: Hybrid/EV Battery 35 Circuit Performance

DTC P1B4C: Hybrid/EV Battery 35 Circuit Low Voltage

DTC P1B4D: Hybrid/EV Battery 35 Circuit High Voltage

DTC P1B4E: Hybrid/EV Battery 36 Circuit Performance

DTC P1B4F: Hybrid/EV Battery 36 Circuit Low Voltage

DTC P1B50: Hybrid/EV Battery 36 Circuit High Voltage

DTC P1B50: Hybrid/EV Battery 37 Circuit Performance

DTC P1B51: Hybrid/EV Battery 37 Circuit Low Voltage

DTC P1B52: Hybrid/EV Battery 37 Circuit High Voltage

DTC P1B53: Hybrid/EV Battery 37 Circuit High Voltage

DTC P1B54: Hybrid/EV Battery 38 Circuit Performance

DTC P1B55: Hybrid/EV Battery 38 Circuit Low Voltage

DTC P1B56: Hybrid/EV Battery 38 Circuit High Voltage

DTC P1B57: Hybrid/EV Battery 39 Circuit Performance

DTC P1B58: Hybrid/EV Battery 39 Circuit Low Voltage

DTC P1B59: Hybrid/EV Battery 39 Circuit High Voltage

DTC P1B5A: Hybrid/EV Battery 40 Circuit Performance

DTC P1B5B: Hybrid/EV Battery 40 Circuit Low Voltage

DTC P1B5C: Hybrid/EV Battery 40 Circuit High Voltage

DTC P1B5D: Hybrid/EV Battery 41 Circuit Performance

DTC P1B5E: Hybrid/EV Battery 41 Circuit Low Voltage

DTC P1B5F: Hybrid/EV Battery 41 Circuit High Voltage

DTC P1B60: Hybrid/EV Battery 42 Circuit Performance

DTC P1B61: Hybrid/EV Battery 42 Circuit Low Voltage

DTC P1B62: Hybrid/EV Battery 42 Circuit High Voltage

DTC P1B63: Hybrid/EV Battery 43 Circuit Performance

DTC P1B64: Hybrid/EV Battery 43 Circuit Low Voltage

DTC P1B65: Hybrid/EV Battery 43 Circuit High Voltage

DTC P1B66: Hybrid/EV Battery 44 Circuit Performance

DTC P1B67: Hybrid/EV Battery 44 Circuit Low Voltage

DTC P1B68: Hybrid/EV Battery 44 Circuit High Voltage

DTC P1B69: Hybrid/EV Battery 45 Circuit Performance

DTC P1B6A: Hybrid/EV Battery 45 Circuit Low Voltage

DTC P1B6B: Hybrid/EV Battery 45 Circuit High Voltage

DTC P1B6C: Hybrid/EV Battery 46 Circuit Performance

DTC P1B6D: Hybrid/EV Battery 46 Circuit Low Voltage

DTC P1B6E: Hybrid/EV Battery 46 Circuit High Voltage

DTC P1B6F: Hybrid/EV Battery 47 Circuit Performance

DTC P1B70: Hybrid/EV Battery 47 Circuit Low Voltage

DTC P1B71: Hybrid/EV Battery 47 Circuit High Voltage

DTC P1B72: Hybrid/EV Battery 48 Circuit Performance

DTC P1B73: Hybrid/EV Battery 48 Circuit Low Voltage

DTC P1B74: Hybrid/EV Battery 48 Circuit High Voltage

DTC P1B75: Hybrid/EV Battery 49 Circuit Performance

DTC P1B76: Hybrid/EV Battery 49 Circuit Low Voltage

DTC P1B77: Hybrid/EV Battery 49 Circuit High Voltage

DTC P1B78: Hybrid/EV Battery 50 Circuit Performance

DTC P1B79: Hybrid/EV Battery 50 Circuit Low Voltage

DTC P1B7A: Hybrid/EV Battery 50 Circuit High Voltage

DTC P1B7B: Hybrid/EV Battery 51 Circuit Performance

DTC P1B7C: Hybrid/EV Battery 51 Circuit Low Voltage

DTC P1B7D: Hybrid/EV Battery 51 Circuit High Voltage

DTC P1B7E: Hybrid/EV Battery 52 Circuit Performance

DTC P1B7F: Hybrid/EV Battery 52 Circuit Low Voltage

DTC P1B80: Hybrid/EV Battery 52 Circuit High Voltage

DTC P1B81: Hybrid/EV Battery 53 Circuit Performance

DTC P1B82: Hybrid/EV Battery 53 Circuit Low Voltage

DTC P1B83: Hybrid/EV Battery 53 Circuit High Voltage

DTC P1B84: Hybrid/EV Battery 54 Circuit Performance

DTC P1B85: Hybrid/EV Battery 54 Circuit Low Voltage

DTC P1B86: Hybrid/EV Battery 54 Circuit High Voltage

DTC P1B87: Hybrid/EV Battery 55 Circuit Performance

DTC P1B88: Hybrid/EV Battery 55 Circuit Low Voltage

DTC P1B89: Hybrid/EV Battery 55 Circuit High Voltage

DTC P1B8A: Hybrid/EV Battery 56 Circuit Performance

DTC P1B8B: Hybrid/EV Battery 56 Circuit Low Voltage

DTC P1B8C: Hybrid/EV Battery 56 Circuit High Voltage

DTC P1B8D: Hybrid/EV Battery 57 Circuit Performance

DTC P1B8E: Hybrid/EV Battery 57 Circuit Low Voltage

DTC P1B8F: Hybrid/EV Battery 57 Circuit High Voltage

DTC P1B90: Hybrid/EV Battery 58 Circuit Performance

DTC P1B91: Hybrid/EV Battery 58 Circuit Low Voltage

DTC P1B92: Hybrid/EV Battery 58 Circuit High Voltage

DTC P1B93: Hybrid/EV Battery 59 Circuit Performance

DTC P1B94: Hybrid/EV Battery 59 Circuit Low Voltage

DTC P1B95: Hybrid/EV Battery 59 Circuit High Voltage

DTC P1B96: Hybrid/EV Battery 60 Circuit Performance

DTC P1B97: Hybrid/EV Battery 60 Circuit Low Voltage

DTC P1B98: Hybrid/EV Battery 60 Circuit High Voltage

DTC P1B99: Hybrid/EV Battery 61 Circuit Performance

DTC P1B9A: Hybrid/EV Battery 61 Circuit Low Voltage

DTC P1B9B: Hybrid/EV Battery 61 Circuit High Voltage

DTC P1B9C: Hybrid/EV Battery 62 Circuit Performance

DTC P1B9D: Hybrid/EV Battery 62 Circuit Low Voltage

DTC P1B9E: Hybrid/EV Battery 62 Circuit High Voltage

DTC P1B9F: Hybrid/EV Battery 63 Circuit Performance

DTC P1BA0: Hybrid/EV Battery 63 Circuit Low Voltage

DTC P1BA1: Hybrid/EV Battery 63 Circuit High Voltage

DTC P1BA2: Hybrid/EV Battery 64 Circuit Performance

DTC P1BA3: Hybrid/EV Battery 64 Circuit Low Voltage

DTC P1BA4: Hybrid/EV Battery 64 Circuit High Voltage

DTC P1BA5: Hybrid/EV Battery 65 Circuit Performance

DTC P1BA6: Hybrid/EV Battery 65 Circuit Low Voltage

DTC P1BA7: Hybrid/EV Battery 65 Circuit High Voltage

DTC P1BA8: Hybrid/EV Battery 66 Circuit Performance

DTC P1BA9: Hybrid/EV Battery 66 Circuit Low Voltage

DTC P1BAA: Hybrid/EV Battery 66 Circuit High Voltage

DTC P1BAB: Hybrid/EV Battery 67 Circuit Performance

DTC P1BAC: Hybrid/EV Battery 67 Circuit Low Voltage

DTC P1BAD: Hybrid/EV Battery 67 Circuit High Voltage

DTC P1BAE: Hybrid/EV Battery 68 Circuit Performance

DTC P1BAF: Hybrid/EV Battery 68 Circuit Low Voltage

DTC P1BB0: Hybrid/EV Battery 68 Circuit High Voltage

DTC P1BB1: Hybrid/EV Battery 69 Circuit Performance

DTC P1BB2: Hybrid/EV Battery 69 Circuit Low Voltage

DTC P1BB3: Hybrid/EV Battery 69 Circuit High Voltage

DTC P1BB4: Hybrid/EV Battery 70 Circuit Performance

DTC P1BB5: Hybrid/EV Battery 70 Circuit Low Voltage

DTC P1BB6: Hybrid/EV Battery 70 Circuit High Voltage

DTC P1BB7: Hybrid/EV Battery 71 Circuit Performance

DTC P1BB8: Hybrid/EV Battery 71 Circuit Low Voltage

DTC P1BB9: Hybrid/EV Battery 71 Circuit High Voltage

DTC P1BBA: Hybrid/EV Battery 72 Circuit Performance

DTC P1BBB: Hybrid/EV Battery 72 Circuit Low Voltage

DTC P1BBC: Hybrid/EV Battery 72 Circuit High Voltage

DTC P1BBD: Hybrid/EV Battery 73 Circuit Performance

DTC P1BBE: Hybrid/EV Battery 73 Circuit Low Voltage

DTC P1BBF: Hybrid/EV Battery 73 Circuit High Voltage

DTC P1BC0: Hybrid/EV Battery 74 Circuit Performance

DTC P1BC1: Hybrid/EV Battery 74 Circuit Low Voltage

DTC P1BC2: Hybrid/EV Battery 74 Circuit High Voltage

DTC P1BC3: Hybrid/EV Battery 75 Circuit Performance

DTC P1BC4: Hybrid/EV Battery 75 Circuit Low Voltage

DTC P1BC5: Hybrid/EV Battery 75 Circuit High Voltage

DTC P1BC6: Hybrid/EV Battery 76 Circuit Performance

DTC P1BC7: Hybrid/EV Battery 76 Circuit Low Voltage

DTC P1BC8: Hybrid/EV Battery 76 Circuit High Voltage

DTC P1BC9: Hybrid/EV Battery 77 Circuit Performance

DTC P1BCA: Hybrid/EV Battery 77 Circuit Low Voltage

DTC P1BCB: Hybrid/EV Battery 77 Circuit High Voltage

DTC P1BCC: Hybrid/EV Battery 78 Circuit Performance

DTC P1BCD: Hybrid/EV Battery 78 Circuit Low Voltage

DTC P1BCE: Hybrid/EV Battery 78 Circuit High Voltage

DTC P1BCF: Hybrid/EV Battery 79 Circuit Performance

DTC P1BD0: Hybrid/EV Battery 79 Circuit Low Voltage

DTC P1BD1: Hybrid/EV Battery 79 Circuit High Voltage

DTC P1BD2: Hybrid/EV Battery 80 Circuit Performance

DTC P1BD3: Hybrid/EV Battery 80 Circuit Low Voltage

DTC P1BD4: Hybrid/EV Battery 80 Circuit High Voltage

DTC P1BD5: Hybrid/EV Battery 81 Circuit Performance

DTC P1BD6: Hybrid/EV Battery 81 Circuit Low Voltage

DTC P1BD7: Hybrid/EV Battery 81 Circuit High Voltage

DTC P1BD8: Hybrid/EV Battery 82 Circuit Performance

DTC P1BD9: Hybrid/EV Battery 82 Circuit Low Voltage

DTC P1BDA: Hybrid/EV Battery 82 Circuit High Voltage

DTC P1BDB: Hybrid/EV Battery 83 Circuit Performance

DTC P1BDC: Hybrid/EV Battery 83 Circuit Low Voltage

DTC P1BDD: Hybrid/EV Battery 83 Circuit High Voltage

DTC P1BDE: Hybrid/EV Battery 84 Circuit Performance

DTC P1BDF: Hybrid/EV Battery 84 Circuit Low Voltage

DTC P1BE0: Hybrid/EV Battery 84 Circuit High Voltage

DTC P1BE1: Hybrid/EV Battery 85 Circuit Performance

DTC P1BE2: Hybrid/EV Battery 85 Circuit Low Voltage

DTC P1BE3: Hybrid/EV Battery 85 Circuit High Voltage

DTC P1BE4: Hybrid/EV Battery 86 Circuit Performance

DTC P1BE5: Hybrid/EV Battery 86 Circuit Low Voltage

DTC P1BE6: Hybrid/EV Battery 86 Circuit High Voltage

DTC P1BE7: Hybrid/EV Battery 87 Circuit Performance

DTC P1BE8: Hybrid/EV Battery 87 Circuit Low Voltage

DTC P1BE9: Hybrid/EV Battery 87 Circuit High Voltage

DTC P1BEA: Hybrid/EV Battery 88 Circuit Performance

DTC P1BEB: Hybrid/EV Battery 88 Circuit Low Voltage

DTC P1BEC: Hybrid/EV Battery 88 Circuit High Voltage

DTC P1BED: Hybrid/EV Battery 89 Circuit Performance

DTC P1BEE: Hybrid/EV Battery 89 Circuit Low Voltage

DTC P1BEF: Hybrid/EV Battery 89 Circuit High Voltage

DTC P1BF0: Hybrid/EV Battery 90 Circuit Performance

DTC P1BF1: Hybrid/EV Battery 90 Circuit Low Voltage

DTC P1BF2: Hybrid/EV Battery 90 Circuit High Voltage

DTC P1BF3: Hybrid/EV Battery 91 Circuit Performance

DTC P1BF4: Hybrid/EV Battery 91 Circuit Low Voltage

DTC P1BF5: Hybrid/EV Battery 91 Circuit High Voltage

DTC P1BF6: Hybrid/EV Battery 92 Circuit Performance

DTC P1BF7: Hybrid/EV Battery 92 Circuit Low Voltage

DTC P1BF8: Hybrid/EV Battery 92 Circuit High Voltage

DTC P1BF9: Hybrid/EV Battery 93 Circuit Performance

DTC P1BFA: Hybrid/EV Battery 93 Circuit Low Voltage

DTC P1BFB: Hybrid/EV Battery 93 Circuit High Voltage

DTC P1BFC: Hybrid/EV Battery 94 Circuit Performance

DTC P1BFD: Hybrid/EV Battery 94 Circuit Low Voltage

DTC P1BFE: Hybrid/EV Battery 94 Circuit High Voltage

DTC P1E01: Hybrid/EV Battery 95 Circuit Performance

DTC P1E02: Hybrid/EV Battery 95 Circuit Low Voltage

DTC P1E03: Hybrid/EV Battery 95 Circuit High Voltage

DTC P1E04: Hybrid/EV Battery 96 Circuit Performance

DTC P1E05: Hybrid/EV Battery 96 Circuit Low Voltage

DTC P1E06: Hybrid/EV Battery 96 Circuit High Voltage

DTC P1E4C: Hybrid/EV Battery 33 Circuit

DTC P1E4D: Hybrid/EV Battery 34 Circuit

DTC P1E4E: Hybrid/EV Battery 35 Circuit

DTC P1E4F: Hybrid/EV Battery 36 Circuit

DTC P1E50: Hybrid/EV Battery 37 Circuit

DTC P1E51: Hybrid/EV Battery 38 Circuit

DTC P1E52: Hybrid/EV Battery 39 Circuit

DTC P1E53: Hybrid/EV Battery 40 Circuit

DTC P1E54: Hybrid/EV Battery 41 Circuit

DTC P1E55: Hybrid/EV Battery 42 Circuit

DTC P1E56: Hybrid/EV Battery 43 Circuit

DTC P1E57: Hybrid/EV Battery 44 Circuit

DTC P1E58: Hybrid/EV Battery 45 Circuit

DTC P1E59: Hybrid/EV Battery 46 Circuit

DTC P1E5A: Hybrid/EV Battery 47 Circuit

DTC P1E5B: Hybrid/EV Battery 48 Circuit

DTC P1E5C: Hybrid/EV Battery 49 Circuit

DTC P1E5D: Hybrid/EV Battery 50 Circuit

DTC P1E5E: Hybrid/EV Battery 51 Circuit

DTC P1E5F: Hybrid/EV Battery 52 Circuit

DTC P1E60: Hybrid/EV Battery 53 Circuit

DTC P1E61: Hybrid/EV Battery 54 Circuit

DTC P1E62: Hybrid/EV Battery 55 Circuit

DTC P1E63: Hybrid/EV Battery 56 Circuit

DTC P1E64: Hybrid/EV Battery 57 Circuit

DTC P1E65: Hybrid/EV Battery 58 Circuit

DTC P1E66: Hybrid/EV Battery 59 Circuit

DTC P1E67: Hybrid/EV Battery 60 Circuit

DTC P1E68: Hybrid/EV Battery 61 Circuit

DTC P1E69: Hybrid/EV Battery 62 Circuit

DTC P1E6A: Hybrid/EV Battery 63 Circuit

DTC P1E6B: Hybrid/EV Battery 64 Circuit

DTC P1E6C: Hybrid/EV Battery 65 Circuit

DTC P1E6D: Hybrid/EV Battery 66 Circuit

DTC P1E6E: Hybrid/EV Battery 67 Circuit

DTC P1E6F: Hybrid/EV Battery 68 Circuit

DTC P1E70: Hybrid/EV Battery 69 Circuit

DTC P1E71: Hybrid/EV Battery 70 Circuit

DTC P1E72: Hybrid/EV Battery 71 Circuit

DTC P1E73: Hybrid/EV Battery 72 Circuit

DTC P1E74: Hybrid/EV Battery 73 Circuit

DTC P1E75: Hybrid/EV Battery 74 Circuit

DTC P1E76: Hybrid/EV Battery 75 Circuit

DTC P1E77: Hybrid/EV Battery 76 Circuit

DTC P1E78: Hybrid/EV Battery 77 Circuit

DTC P1E79: Hybrid/EV Battery 78 Circuit

DTC P1E7A: Hybrid/EV Battery 79 Circuit

DTC P1E7B: Hybrid/EV Battery 80 Circuit

DTC P1E7C: Hybrid/EV Battery 81 Circuit

DTC P1E7D: Hybrid/EV Battery 82 Circuit

DTC P1E7E: Hybrid/EV Battery 83 Circuit

DTC P1E7F: Hybrid/EV Battery 84 Circuit

DTC P1E80: Hybrid/EV Battery 85 Circuit

DTC P1E81: Hybrid/EV Battery 86 Circuit

DTC P1E82: Hybrid/EV Battery 87 Circuit

DTC P1E83: Hybrid/EV Battery 88 Circuit

DTC P1E84: Hybrid/EV Battery 89 Circuit

DTC P1E85: Hybrid/EV Battery 90 Circuit

DTC P1E86: Hybrid/EV Battery 91 Circuit

DTC P1E87: Hybrid/EV Battery 92 Circuit

DTC P1E88: Hybrid/EV Battery 93 Circuit

DTC P1E89: Hybrid/EV Battery 94 Circuit

DTC P1E8a: Hybrid/EV Battery 95 Circuit

Circuit/System Description

The hybrid/EV battery pack contains 288 cells. Groups of three cells are welded together in parallel. There are a total of 96 cell groups in the hybrid/EV battery pack assembly. These cell groups are electrically connected in-series. Each individual cell group is rated at 3.7 V, for a nominal system voltage of 355 V direct current. The battery cells are also grouped together into three sections. The first 90 cells/30 cell groups make up battery section one. This section is adjacent to the cowl and contains batteries 67 through to 96. Battery section two is located behind section one. It is made up of 72 cells/24 cell groups and contains batteries 43 through to 66. The transverse battery section is section number three, it is made up of the remaining 126 cells/42 cell groups and contains batteries 1 through to 42. The three battery sections are individually serviceable components.

The battery energy control module monitors the voltage of the 96 battery cell groups through the four hybrid/EV battery interface control modules. Voltage sense circuits are attached to each individual cell group, and these sense circuits terminate at a connector located on the top surface of the battery section. A serviceable auxiliary battery wiring harenss joins this connector to a hybrid/EV battery interface control module, also located on the top surface of the battery section. The hybrid/EV battery interface control module encodes the voltage reading and transmits it to the battery energy control module through the battery control harness. There is one hybrid/EV battery interface control module located on battery sections one and two, and two hybrid/EV battery interface control modules associated with battery section three. The hybrid/EV battery interface control module, battery energy control module wiring harness, auxiliary battery wiring harenss and battery energy control module are all considered serviceable components.

The battery energy control module will determine when a fault condition is present. Diagnostics and system status are communicated from the battery energy control module to hybrid/EV powertrain control module 2 through serial data. The hybrid/EV powertrain control module 2 is the host controller for diagnostic trouble code information.

Conditions for Running the DTC

DTC P0B3B, P0B3D, P0B3E, P0B40, P0B42, P0B43, P0B45, P0B47, P0B48, P0B4A, P0B4C, P0B4D, P0B4F, P0B51, P0B54, P0B52, P0B56, P0B57, P0B59, P0B5B, P0B5C, P0B5E, P0B60, P0B61, P0B63, P0B65, P0B66, P0B68, P0B6A, P0B6B, P0B6D, P0B6F, P0B70, P0B72, P0B74, P0B75, P0B77, P0B79, P0B7A, P0B7C, P0B7E, P0B7F, P0B81, P0B83, P0B84, P0B86, P0B88, P0B89, P0B8B, P0B8D, P0B8E, P0B90, P0B92, P0B93, P0B95, P0B97, P0B98, P0B9A, P0B9C, P0B9D, P0B9F, P0BA1, P0BA2, P0BA4, P0BA6, P0BA7, P0BA9, P0BAB, P0BAC, P0BAE, P0BB0, P0BB1, P0BB3, P0BB5, P0BB6, P0BB8, P0BBA, P0BBB, P1B17, P1B18, P1B1A, P1B1B, P1B1D, P1B1E, P1B20, P1B21, P1B23, P1B24, P1B26, P1B27, P1B28, P1B29, P1B2A, P1B2B, P1B2C, P1B2D, P1B46, P1B47, P1B4A, P1B4C, P1B4D, P1B4F, P1B50, P1B52, P1B53, P1B55, P1B56, P1B58, P1B59, P1B5B, P1B5C, P1B5E, P1B5F, P1B61, P1B64, P1B62, P1B65, P1B67, P1B68, P1B6A, P1B6B, P1B6D, P1B6E, P1B70, P1B71, P1B73, P1B74, P1B76, P1B77, P1B79, P1B7A, P1B7C, P1B7D, P1B7F, P1B80, P1B82, P1B83, P1B85, P1B86, P1B88, P1B89, P1B8B, P1B8C, P1B8E, P1B8F, P1B91, P1B92, P1B94, P1B95, P1B97, P1B98, P1B9A, P1B9B, P1B9D, P1B9E, P1BA0, P1BA1, P1BA3, P1BA4, P1BA6, P1BA7, P1BA9, P1BAA, P1BAC, P1BAD, P1BAF, P1BB0, P1BB2, P1BB3, P1BB5, P1BB6, P1BB8, P1BB9, P1BBB, P1BBC, P1BBE, P1BBF, P1BC1, P1BC2, P1BC4, P1BC5, P1BC7, P1BC8, P1BCA, P1BCB, P1BCD, P1BCE, P1BD0, P1BD1, P1BD3, P1BD4, P1BD6, P1BD7, P1BD9, P1BDA, P1BDC, P1BDD, P1BDF, P1BE0, P1BE2, P1BE3, P1BE5, P1BE6, P1BE8, P1BE9, P1BEB, P1BEC, P1BEE, P1BEF, P1BF1, P1BF2, P1BF4, P1BF5, P1BF7, P1BF8, P1BFA, P1BFB, P1BFD, P1BFE, P1E02, P1E03, P1E05, P1E06, P1E4C, P1E4D, P1E4E, P1E4F, P1E50, P1E51, P1E52, P1E53, P1E54, P1E55, P1E56, P1E57, P1E58, P1E59, P1E5A, P1E5B, P1E5C, P1E5D, P1E5E, P1E5F, P1E60, P1E61, P1E62, P1E63, P1E64, P1E65, P1E66, P1E67, P1E68, P1E69, P1E6A, P1E6B, P1E6C, P1E6D, P1E6E, P1E6F, P1E70, P1E71, P1E72, P1E73, P1E74, P1E75,

P1E76, P1E77, P1E78, P1E79, P1E7A, P1E7B, P1E7C, P1E7D, P1E7E, P1E7F, P1E80, P1E81, P1E82, P1E83, P1E84, P1E85, P1E86, P1E87, P1E88, P1E89 and P1E8A

All of the following conditions exist:

- Ignition in any position.
- The battery energy control module is awake and communicating.
- None of the following DTCs are set; P1A07, P1E8E, P1E8F, P1E90, P1E91, P1E92, P1E93, P1E94, P1E95, P1E96, P1E97, P1E98, P1E99, P1E9A, P1E9B, P1E9C, P1E9D, P1E9E, P1E9F , P1EA0, P1EA1, P1EA2, P1EA3, P1EA4, P1EA5, P1EB1, P1EB2, P1EB3, P1EB4, P1EB5, U2402, U2603, U2604, U2605 and U2606.

DTC P0B3C, P0B41, P0B46, P0B4B, P0B50, P0B55, P0B5A, P0B5F, P0B64, P0B69, P0B6E, P0B73, P0B78, P0B7D, P0B82, P0B87, P0B8C, P0B91, P0B96, P0B9B, P0BA0, P0BA5, P0BAA, P0BAF, P0BB4, P0BB9, P1B19, P1B1F, P1B25, P1B45, P1B48, P1B4B, P1B4E, P1B51, P1B54, P1B57, P1B5A, P1B5D, P1B60, P1B63, P1B66, P1B69, P1B6C, P1B6F, P1B72, P1B75, P1B78, P1B7B, P1B7E, P1B81, P1B84, P1B87, P1B8A, P1B8D, P1B90, P1B93, P1B96, P1B99, P1B9C, P1B9F, P1BA2, P1BA5, P1BA8, P1BAB, P1BAE, P1BB1, P1BB4, P1BB7, P1BBA, P1BBD, P1BC0, P1BC3, P1BC6, P1BC9, P1BCC, P1BCF, P1BD2, P1BD5, P1BD8, P1BDB, P1BDE, P1BE1, P1BE4, P1BE7, P1BEA, P1BED, P1BF0, P1BF3, P1BF6, P1BF9, P1BFC, P1E01 and P1E04

All of the following conditions exist:

- Ignition in ON/RUN.
- Vehicle speed is greater than 0.
- There is a change in the Voltage and Current readings.
- DTC U185A is not set.

Conditions for Setting the DTC

Battery Circuit

- P0B3B, P0B40, P0B45, P0B4A, P0B4F, P0B54, P0B59, P0B5E, P0B63, P0B68, P0B6D, P0B72, P0B77, P0B7C, P0B81, P0B86, P0B8B, P0B90, P0B95, P0B9A, P0B9F, P0BA4, P0BA9, P0BAE, P0BB3, P0BB8, P1B28, P1B29, P1B2A, P1B2B, P1B2C, P1B2D, P1E4C, P1E4D, P1E4E, P1E4F, P1E50, P1E51, P1E52, P1E53, P1E54, P1E55, P1E56, P1E57, P1E58, P1E59, P1E5A, P1E5B, P1E5C, P1E5D, P1E5E, P1E5F, P1E60, P1E61, P1E62, P1E63, P1E64, P1E65, P1E66, P1E67, P1E68, P1E69, P1E6A, P1E6B, P1E6C, P1E6D, P1E6E, P1E6F, P1E70, P1E71, P1E72, P1E73, P1E74, P1E75, P1E76, P1E77, P1E78, P1E79, P1E7A, P1E7B, P1E7C, P1E7D, P1E7E, P1E7F, P1E80, P1E81, P1E82, P1E83, P1E84, P1E85, P1E86, P1E87, P1E88, P1E89, P1E8A are type B DTCs.
- The battery energy control module detects high resistance on the circuit.

Circuit Performance

- P0B3C, P0B41, P0B46, P0B4B, P0B50, P0B55, P0B5A, P0B5F, P0B64, P0B69, P0B6E, P0B73, P0B78, P0B7D, P0B82, P0B87, P0B8C, P0B91, P0B96, P0B9B, P0BA0, P0BA5, P0BAA, P0BAF, P0BB4, P0BB9, P1B19, P1B1F, P1B25, P1B45, P1B48, P1B4B, P1B4E, P1B51, P1B54, P1B57, P1B5A, P1B5D, P1B60, P1B63, P1B66, P1B69, P1B6C, P1B6F, P1B72, P1B75, P1B78, P1B7B, P1B7E, P1B81, P1B84, P1B87, P1B8A, P1B8D, P1B90, P1B93, P1B96, P1B99, P1B9C, P1B9F, P1BA2, P1BA5, P1BA8, P1BAB, P1BAE, P1BB1, P1BB4, P1BB7, P1BBA, P1BBD, P1BC0, P1BC3, P1BC6, P1BC9, P1BCC, P1BCF, P1BD2, P1BD5, P1BD8, P1BDB, P1BDE, P1BE1, P1BE4, P1BE7, P1BEA, P1BED, P1BF0, P1BF3, P1BF6, P1BF9, P1BFC, P1E01 and P1E04 are type B DTCs.

- The faulted cell group does not change voltage.

Low Voltage

- P0B3D,P0B42, P0B47, P0B4C, P0B51, P0B56, P0B5B, P0B60, P0B65, P0B6A, P0B6F, P0B74, P0B79, P0B7E, P0B83, P0B88, P0B8D, P0B92, P0B97, P0B9C, P0BA1, P0BA6, P0BAB, P0BB0, P0BB5, P0BBA, P1B17, P1B1A, P1B1D, P1B20, P1B23, P1B26, P1B46, P1B4C, P1B4F, P1B52, P1B55, P1B58, P1B5B, P1B5E, P1B61, P1B64, P1B67, P1B6A, P1B6D, P1B70, P1B73, P1B76, P1B79, P1B7C, P1B7F, P1B82, P1B85, P1B88, P1B8B, P1B8E, P1B91, P1B94, P1B97, P1B9A, P1B9D, P1BA0, P1BA3, P1BA6, P1BA9, P1BAC, P1BAF, P1BB2, P1BB5, P1BB8, P1BBB, P1BBE, P1BC1, P1BC4, P1BC7, P1BCA, P1BCD, P1BD0, P1BD3, P1BD6, P1BD9, P1BDC, P1BDF, P1BE2, P1BE5, P1BE8, P1BEB, P1BEE, P1BF1, P1BF4, P1BF7, P1BFA, P1BFD, P1E02 and P1E05 are type B DTCs.
- Any hybrid/EV battery voltage signal is less than 0.2 V.

High Voltage

- P0B3E, P0B43, P0B48, P0B4D, P0B52, P0B57, P0B5C, P0B61, P0B66, P0B6B, P0B70, P0B75, P0B7A, P0B7F, P0B84, P0B89, P0B8E, P0B93, P0B98, P0B9D, P0BA2, P0BA7, P0BAC, P0BB1, P0BB6, P0BBB, P1B18, P1B1B, P1B1E, P1B21, P1B24, P1B27, P1B47, P1B4A, P1B4D, P1B50, P1B53, P1B56, P1B59, P1B5C, P1B5F, P1B62, P1B65, P1B68, P1B6B, P1B6E, P1B71, P1B74, P1B77, P1B7A, P1B7D, P1B80, P1B83, P1B86, P1B89, P1B8C, P1B8F, P1B92, P1B95, P1B98, P1B9B, P1B9E, P1BA1, P1BA4, P1BA7, P1BAA, P1BAD, P1BB0, P1BB3, P1BB6, P1BB9, P1BBC, P1BBF, P1BC2, P1BC5, P1BC8, P1BCB, P1BCE, P1BD1, P1BD4, P1BD7, P1BDA, P1BDD, P1BE0, P1BE3, P1BE6, P1BE6, P1BE9, P1BEC, P1BEF, P1BF2, P1BF5, P1BF8, P1BFB, P1BFE, P1E03 and P1E06 are type B DTCs.
- Any hybrid/EV battery voltage signal is greater than 4.8 V.

Action Taken When the DTC Sets

- DTC P0B3B-P0BBB, P1B16-1B27, P1B45-P1BFE, P1E01-P1E06 or P1E4C-P1E8A are type B DTCs.
- If any of these DTCs are set, the vehicle will operate in a reduced power mode and electric only engine ON mode.
- If additional fault conditions occur, this may cause the contactors to open at anytime.

Conditions for Clearing the DTC

- DTC P0B3B-P0BBB, P1B16-1B27, P1B45-P1BFE, P1E01-P1E06 or P1E4C-P1E8A are type B DTCs.
- No hybrid/EV battery voltage signal is less than 0.2 V or greater than 4.8 V.
- Ignition must be cycled from ON to OFF.

Reference Information

Schematic Reference

Hybrid Energy Storage Schematics

Connector End View Reference

Component Connector End Views

Description and Operation

Drive Motor Battery System Description

Electrical Information Reference

- Circuit Testing
- Connector Repairs
- Testing for Intermittent Conditions and Poor Connections
- Wiring Repairs

DTC Type Reference

Powertrain Diagnostic Trouble Code (DTC) Type Definitions

Scan Tool Reference

Control Module References for scan tool information

Special Tools

EL-48900 HEV Safety Kit

For equivalent regional tools, refer to Special Tools .

Circuit/System Verification

Ignition ON, observe the scan tool Hybrid/EV Battery 1-96 parameters. Each reading should be between 3.0-4.1 V, and all readings should be within 0.1 V of each other.

Circuit/System Testing

Danger: High voltage enabling and disabling shall be only performed by High Voltage Qualified Technicians. The procedures for high-voltage enabling/disabling can be found in the service instructions and must be strictly followed at all times. The usage of the Protocol High Voltage Disabling/Enabling is mandatory. The High-Voltage Qualified Technician is responsible for the adherence to the manufacturer's service instructions as well as current national legal regulations.

Failure to follow the procedures exactly as written may result in serious injury or death.

Questions regarding training can be answered by your national training centre.

Danger: Any hybrid/EV battery pack replacement shall be performed by High-Voltage Qualified Technicians only. The replacement procedure can be found in the service instruction and must be strictly followed at all times. The High-Voltage Qualified Technician is responsible for adherence to the manufacturer's service instructions as well as current national legal regulations. If the hybrid/EV battery pack needs to be replaced contact the Technical Assistance Centre for further instructions prior to removal of the battery pack.

1. Verify that no other DTCs are set.
   If any other DTCs are set, refer to Diagnostic Trouble Code (DTC) List - Vehicle .
2. If DTC P0B3B-P0BBB, P1B16-1B27, P1B45-P1BFE, P1E01-P1E06 or P1E4C-P1E8A is set, replace the A4 hybrid/EV battery pack.

Repair Instructions

Perform the Diagnostic Repair Verification after completing the repair.

- Drive Motor Battery Replacement and Shipping Preparation
- Control Module References for battery energy control module and hybrid/EV battery interface control modules 1-4 replacement, programming and set-up for the hybrid/EV battery pack replacement.

&#169© Copyright Chevrolet. All rights reserved

DTC P0BBE

Diagnostic Instructions

- Perform the Diagnostic System Check - Vehicle prior to using this diagnostic procedure.
- Review Strategy Based Diagnosis for an overview of the diagnostic approach.
- Diagnostic Procedure Instructions provides an overview of each diagnostic category.

DTC Descriptor

DTC P0BBE: Hybrid/EV Battery Pack Voltage

Circuit/System Description

The drive motor battery contains 288 cells. Groups of three cells are welded together in parallel. There are a total of 96 cell groups in the drive motor battery assembly. These cell groups are electrically connected in-series. Each individual cell group is rated at 3.7 V, for a nominal system voltage of 355 V direct current. The battery cells are also grouped together into three sections. The first 90 cells/30 cell groups make up battery section one. This section is adjacent to the cowl and contains batteries 67 through to 96. Battery section two is located behind section one. It is made up of 72 cells/24 cell groups and contains batteries 43 through to 66. The transverse battery section is section number three, it is made up of the remaining 126 cells/42 cell groups and contains batteries 1 through to 42. The three battery sections are individually serviceable components.

The battery energy control module monitors the voltage of the 96 battery triplets. Voltage sense lines are attached to each individual triplet, and these sense lines terminate at a connector located on the top surface of the battery section. A serviceable voltage sense harness joins this connector to a drive motor battery high-voltage interface control module, also located on the top surface of the battery section. The drive motor battery high-voltage interface control module encodes the voltage reading and transmits it to the battery energy control module through the battery control harness. There is one drive motor battery high-voltage interface control module located on battery sections one and two, and two drive motor battery high-voltage interface control modules associated with battery section three. The drive motor battery high-voltage interface control module, voltage sense harnesses, battery control harness and battery energy control module are all considered serviceable components.

The battery energy control module will determine when a fault condition is present. Diagnostics and system status are communicated from the battery energy control module to hybrid/EV powertrain control module 2 through serial data. The hybrid/EV powertrain control module 2 is the host controller for diagnostic trouble code information.

Conditions for Running the DTC

- None of the following DTCs are set: P0B3D, P0B42, P0B47, P0B4C, P0B51, P0B56, P0B5B, P0B60, P0B65, P0B6A, P0B6F, P0B74, P0B79, P0B7E, P0B83, P0B88, P0B8D, P0B92, P0B97, P0B9C, P0BA1, P0BA6, P0BAB, P0BB0, P0BB5, P0BBA, P1B17, P1B1A, P1B1D, P1B20, P1B23, P1B26, P1B46, P1B49, P1B4C, P1B4F, P1B52, P1B55, P1B58, P1B5B, P1B5E, P1B61, P1B64, P1B67, P1B6A, P1B6D, P1B70, P1B73, P1B76, P1B79, P1B7C, P1B7F, P1B82, P1B85, P1B88, P1B8B, P1B8E, P1B91, P1B94, P1B97, P1B9A, P1B9D, P1BA0, P1BA3, P1BA6, P1BA9, P1BAC, P1BAF, P1BB2, P1BB5, P1BB8, P1BBB, P1BBE, P1BC1, P1BC4, P1BC7, P1BCA, P1BCD, P1BD0, P1BD3, P1BD6, P1BD9, P1BDC, P1BDF, P1BE2, P1BE5, P1BE8, P1BEB, P1BEE, P1BF1, P1BF4, P1BF7, P1BFA, P1BFD, P1E02, P1E05, P0B3E, P0B43, P0B48, P0B4D, P0B52, P0B57, P0B5C, P0B61, P0B66, P0B6B, P0B70, P0B75, P0B7A, P0B7F, P0B84, P0B89, P0B8E, P0B93, P0B98, P0B9D, P0BA2, P0BA7, P0BAC, P0BB1, P0BB6, P0BBB, P1B18, P1B1B, P1B1E, P1B21, P1B24, P1B27, P1B47, P1B4A, P1B4D, P1B50, P1B53, P1B56, P1B59, P1B5C, P1B5F, P1B62, P1B65, P1B68, P1B6B, P1B6E, P1B71, P1B74, P1B77, P1B7A, P1B7D, P1B80, P1B83, P1B86, P1B89, P1B8C, P1B8F, P1B92, P1B95, P1B98, P1B9B, P1B9E, P1BA1, P1BA4, P1BA7, P1BAA, P1BAD, P1BB0, P1BB3, P1BB6, P1BB9, P1BBC, P1BBF, P1BC2, P1BC5, P1BC8, P1BCB, P1BCE, P1BD1, P1BD4, P1BD7, P1BDA, P1BDD, P1BE0, P1BE3, P1BE6, P1BE9, P1BEC, P1BEF, P1BF2, P1BF5, P1BF8, P1BFB, P1BFE, P1E03, P1E06, P1E90, P1E8F, P1E91, P1E8E, P1E93, P1E96, P1E95, P1E97, P1E94, P1E99, P1E9C, P1E9B, P1E9D, P1E9A, P1E9F, P1EA2, P1EA1, P1EA3, P1EA0, P1EA5, P1EB1, P1EB5, P0B3B, P0B40, P0B45, P0B4A, P0B4F, P0B54, P0B59, P0B5E, P0B63, P0B68, P0B6D, P0B77, P0B7C, P0B81, P0B86, P0B8B, P0B95, P0B9A, P0B9F, P0BA4, P0BA9, P0BAE, P0BB3, P0BB8, P1B28, P1B29, P1B2A, P1B2B, P1B2C, P1B2D, P1E4C, P1E4D, P1E4E, P1E4F, P1E50, P1E51, P1E52, P1E53, P1E54, P1E56, P1E57, P1E58, P1E59, P1E5A, P1E5B, P1E5C, P1E5D, P1E5E, P1E5F, P1E60, P1E61, P1E62, P1E63, P1E64, P1E65, P1E66, P1E67, P1E68, P1E69, P1E6A, P1E6B, P1E6C, P1E6E, P1E6F, P1E70, P1E71, P1E72, P1E73, P1E74, P1E75, P1E76, P1E77, P1E78, P1E79, P1E7A, P1E7B, P1E7C, P1E7D, P1E7E, P1E7F, P1E80, P1E81, P1E82, P1E83, P1E84, P1E86, P1E87, P1E88, P1E89, P1E8A, P0B3C, P0B41, P0B46, P0B4B, P0B50, P0B55, P0B5A, P0B5F, P0B64, P0B69, P0B6E, P0B73, P0B78, P0B7D, P0B82, P0B87, P0B8C, P0B91, P0B96, P0B9B, P0BA0, P0BA5, P0BAA, P0BAF, P0BB4, P0BB9, P1B16, P1B19, P1B1C, P1B1F, P1B22, P1B25, P1B45, P1B48, P1B4B, P1B4E, P1B51, P1B54, P1B57, P1B5A, P1B5D, P1B60, P1B63, P1B66, P1B69, P1B6C, P1B6F, P1B72, P1B75, P1B78, P1B7B, P1B7E, P1B81, P1B84, P1B87, P1B8A, P1B8D, P1B90, P1B93, P1B96, P1B99, P1B9C, P1B9F, P1BA2, P1BA5, P1BA8, P1BAB, P1BAE, P1BB1, P1BB4, P1BB7, P1BBA, P1BBD, P1BC0, P1BC3, P1BC6, P1BC9, P1BCC, P1BCF, P1BD2, P1BD5, P1BD8, P1BDB, P1BDE, P1BE1, P1BE4, P1BE7, P1BEA, P1BED, P1BF0, P1BF3, P1BF6, P1BF9, P1BFC, P1E01 or P1E04
- The hybrid/EV powertrain control module 2 and battery energy control module are awake and communicating.

Conditions for Setting the DTC

The difference between the maximum cell voltage in the Hybrid/EV Battery and the minimum cell voltage in the Hybrid/EV Battery is greater than 0.3 V.

Action Taken When the DTC Sets

- DTC P0BBE is a type B DTC.
- The vehicle will operate in a reduced power mode and electric only engine ON.
- If additional fault conditions occur, this may cause the contactors to open at anytime.

Conditions for Clearing the DTC

- DTC P0BBE is a type B DTC.
- The Clear Secured High-Voltage DTCs reset function must be performed to prevent resetting the DTC.

Reference Information

Schematic Reference

Hybrid Energy Storage Schematics

Connector End View Reference

Component Connector End Views

Description and Operation

Drive Motor Battery System Description

Electrical Information Reference

- Circuit Testing
- Connector Repairs
- Testing for Intermittent Conditions and Poor Connections
- Wiring Repairs

DTC Type Reference

Powertrain Diagnostic Trouble Code (DTC) Type Definitions

Scan Tool Reference

Control Module References for scan tool information

Special Tools

EL-48900 HEV Safety Kit

For equivalent regional tools, refer to Special Tools .

Circuit/System Verification

Ignition ON, engine OFF, observe the scan tool Hybrid Battery Pack Terminal 1 Voltage, Hybrid Battery Pack Terminal 2 Voltage and Hybrid Battery Pack Voltage parameters. The readings should be between 288-393.6 V, and should be within 10 V of each other.

Circuit/System Testing

Danger: High voltage enabling and disabling shall be only performed by High Voltage Qualified Technicians. The procedures for high-voltage enabling/disabling can be found in the service instructions and must be strictly followed at all times. The usage of the Protocol High Voltage Disabling/Enabling is mandatory. The High-Voltage Qualified Technician is responsible for the adherence to the manufacturer's service instructions as well as current national legal regulations.

Failure to follow the procedures exactly as written may result in serious injury or death.

Questions regarding training can be answered by your national training centre.

Danger: Any hybrid/EV battery pack replacement shall be performed by High-Voltage Qualified Technicians only. The replacement procedure can be found in the service instruction and must be strictly followed at all times. The High-Voltage Qualified Technician is responsible for adherence to the manufacturer's service instructions as well as current national legal regulations. If the hybrid/EV battery pack needs to be replaced contact the Technical Assistance Centre for further instructions prior to removal of the battery pack.

1. Verify that no other DTCs are set.
   If any other DTCs are set, refer to Diagnostic Trouble Code (DTC) List - Vehicle .
2. If DTC P0BBE is set, replace the A4 hybrid/EV battery pack.

Repair Instructions

Perform the Diagnostic Repair Verification after completing the repair.

- Drive Motor Battery Replacement and Shipping Preparation
- Control Module References for battery energy control module replacement, programming and set-up for the hybrid/EV battery pack replacement.

&#169© Copyright Chevrolet. All rights reserved

DTC P0C77 or P0C78

Diagnostic Instructions

- Perform the Diagnostic System Check - Vehicle prior to using this diagnostic procedure.
- Review Strategy Based Diagnosis for an overview of the diagnostic approach.
- Diagnostic Procedure Instructions provides an overview of each diagnostic category.

DTC Descriptors

DTC P0C77: Hybrid/EV Battery System Precharge Time Too Short

DTC P0C78: Hybrid/EV Battery System Precharge Time Too Long

Circuit/System Description

The battery energy control module will diagnose its own systems and determine when a fault condition is present. Diagnostics and system status is communicated from the battery energy control module to the hybrid/EV powertrain control module 2 through serial data. The hybrid/EV powertrain control module 2 is the host controller for diagnostic trouble code (DTC) information.

The hybrid/EV battery contains 5 high-voltage contactors and 2 transistors. The high-voltage contactors allow the high-voltage DC batteries to be connected to the vehicle or safely contain the high-voltage DC within the hybrid/EV battery pack assembly. The 5 high-voltage contactors are a main positive high-voltage contactor, main negative high-voltage contactor, charge positive high-voltage contactor, charge negative high-voltage contactor and multi-function high-voltage contactor. The 2 transistors are the precharge transistor and heater transistor. These contactors/transistors close and open in sequence and are controlled by the hybrid/EV powertrain control module 2. The hybrid/EV powertrain control module 2 supplies voltage to the control circuit for the high-voltage contactors and precharge transistors. Earth is provided through the case earth. The hybrid/EV powertrain control module 2 supplies earth for the heater transistor through the hybrid/EV powertrain control module 2 case earth.

Conditions for Running the DTC

P0C77

- The main contactors are in precharge mode.
- Battery current sensor has not failed.

- High Voltage bus voltage less than 40 V before the start of precharge.
- Bus voltage sensor has not failed.

P0C78

- Battery voltage sensor has not failed.
- Bus voltage sensor has not failed.

Conditions for Setting the DTC

P0C77

The bus voltage is above 80% of battery voltage in less than 50ms.

P0C78

The bus voltage has not reached 95% of battery voltage in 700 ms.

Action Taken When the DTC Sets

- DTC P0C77 and P0C78 are type A DTCs.
- The contactors will be opened.

Conditions for Clearing the DTC

DTC P0C77 and P0C78 are type A DTCs.

Diagnostic Aids

Note: If the high-voltage contactors opened while under high-current load, replace the drive motor battery wire junction block relay. The following conditions could cause the high-voltage contactors to open while under high-current load:

- A collision resulting in supplemental inflatable restraint (SIR) deployment.
- A loss of power or earth to the hybrid/EV powertrain control module 2 while the vehicle is moving.

The precharge time can be affected by the following:

- A long precharge time may be caused by a stuck open hybrid/EV battery negative or hybrid/EV battery multi-function contactor.
- A long precharge time may be caused by a stuck ON hybrid/EV battery precharge transistor.
- A long precharge time may be caused by a short-circuit on the propulsion bus preventing the main bus from reaching its target voltage.

- A short precharge time may be caused by a hybrid/EV battery positive high-voltage contactor being stuck.
- A short precharge time may be caused by a positive high-voltage contactor being stuck.

Reference Information

Schematic Reference

Hybrid Cooling Schematics

Connector End View Reference

Component Connector End Views

Description and Operation

Drive Motor Battery System Description

Electrical Information Reference

- Circuit Testing
- Connector Repairs
- Testing for Intermittent Conditions and Poor Connections
- Wiring Repairs

DTC Type Reference

DTC P16F2

Scan Tool Reference

Control Module References for scan tool information

Special Tools

EL-48900 HEV Safety Kit

For equivalent regional tools, refer to Special Tools .

Circuit/System Testing

Danger: High voltage enabling and disabling shall be only performed by High Voltage Qualified Technicians. The procedures for high-voltage enabling/disabling can be found in the service instructions and must be strictly followed at all times. The usage of the Protocol High Voltage Disabling/Enabling is mandatory. The High-Voltage Qualified Technician is responsible for the adherence to the manufacturer's service instructions as well as current national legal regulations.

Failure to follow the procedures exactly as written may result in serious injury or death.

Questions regarding training can be answered by your national training centre.

Danger: Any hybrid/EV battery pack replacement shall be performed by High-Voltage Qualified Technicians only. The replacement procedure can be found in the service instruction and must be strictly followed at all times. The High-Voltage Qualified Technician is responsible for adherence to the manufacturer's service instructions as well as current national legal regulations. If the hybrid/EV battery pack needs to be replaced contact the Technical Assistance Centre for further instructions prior to removal of the battery pack.

1. Ignition OFF, disable the high voltage at the T6 power inverter module. Refer to High Voltage Disabling .
2. Test for less than 5 Ω between terminal 5 and terminal 6 of the S15 hybrid/EV battery pack high-voltage manual disconnect lever.
   If greater than the specified range, replace the S15 hybrid/EV battery pack high-voltage manual disconnect lever.
3. Reconnect the S15 hybrid/EV battery pack high-voltage manual disconnect lever.
4. Connect the 12 V battery.
5. Ignition ON, verify that DTC P0AA1, P0AD9, P0ADD, P0AE2, P0AE4, P0AFA, P0D0A, P0D11, P1EBC-P1EBF, P1EC0 or P1EC3-P1EC5 is not set.
   If any DTC is set, refer to Diagnostic Trouble Code (DTC) List - Vehicle .
6. With a scan tool, verify the Hybrid Battery Pack Voltage parameter is greater than 205 V at 21°C (69.8° F).
   If the test result is less than the specified range, replace the A4 hybrid/EV battery pack.
7. Disconnect the X2 harness connector at the A28 hybrid/EV battery contactor assembly.
8. Ignition OFF and all vehicle systems OFF. It may take up to 2 minutes for all vehicle systems to power down. Test for less than 10 Ω between the ground circuit terminal 5 and ground.
   If greater than the specified range, test the ground circuit for an open/high resistance.
9. Ignition ON, verify that a test lamp illuminates between the B+ circuit terminal 9 and ground.
   If the test lamp does not illuminate, test the B+ circuit for a short to ground or an open/high resistance. If the circuit tests normal and the B+ circuit fuse is open, replace the A4 hybrid/EV battery pack.
10. Ignition OFF, disconnect the X1 harness connector at the A28 hybrid/EV battery contactor assembly and the X1 harness connector at the K114B hybrid/EV powertrain control module 2.
11. Ignition ON, test for less than 1 V between the control circuit terminal 11 and earth.
    If greater than the specified range, test the control circuit for a short to voltage. If the circuit tests normal, replace the K114B hybrid/EV powertrain control module 2.
12. Ignition OFF, test for infinite resistance between control circuit terminal 11 and earth.
    If less than the specified value, test the control circuit for a short to ground. If the circuit tests normal, replace the K114B hybrid/EV powertrain control module 2.
13. Disconnect the X1 harness connector at the K114B hybrid/EV powertrain control module 2.
14. Test for less than 2 Ω in the control circuit end to end between terminal 11 X1 harness connector at the A28 hybrid/EV battery contactor assembly and terminal 8 X1 harness connector at the K114B hybrid/EV powertrain control module 2.
    If greater than the specified range, test the control circuit for or open-circuit/high resistance.
15. If all circuits test normal, replace the K114B hybrid/EV powertrain control module 2. If the DTC resets, replace the A4 hybrid/EV battery pack.

Repair Instructions

Perform the Diagnostic Repair Verification after completing the repair.

- Drive Motor Battery Replacement and Shipping Preparation
- 300 Volt Battery Positive and Negative Cable Replacement Link to 207100
- Control Module References for hybrid/EV powertrain control module 2 replacement, programming and set-up

&#169© Copyright Chevrolet. All rights reserved

DTC P0D17 or P0D18

Diagnostic Instructions

- Perform the Diagnostic System Check - Vehicle prior to using this diagnostic procedure.
- Review Strategy Based Diagnosis for an overview of the diagnostic approach.
- Diagnostic Procedure Instructions provides an overview of each diagnostic category.

DTC Descriptors

DTC P0D17: Battery Charging System High-Voltage Interlock Circuit Low Voltage

DTC P0D18: Battery Charging System High-Voltage Interlock Circuit High Voltage

Circuit/System Description

The energy management hig-voltage interlock circuit is utilised to verify high-voltage component integrity. The energy management high-voltage interlock circuit is used to determine if access to high-voltage components is being attempted. The opening of these high-voltage components causes high- voltage interlock circuit to open. The hybrid powertrain control module 2 sources about 12 mA of current on the 5 V energy management high-voltage interlock circuit loop. The hybrid powertrain control module 2 monitors both the energy management high-voltage interlock 5 V reference circuit current and the energy management high-voltage interlock signal circuit current in order to detect circuit faults. When the hybrid powertrain control module 2 detects a loss of energy management high-voltage interlock circuit current, the high voltage contactors are commanded open.

Conditions for Running the DTC

P0D17

- The 12 V battery voltage is greater than 9 V.
- The charger contactors are closed.

P0D18

- The 12 V battery voltage is greater than 9 V.
- The hybrid powertrain control module 2 is awake and communicating.

Conditions for Setting the DTC

P0D17

The hybrid powertrain control module 2 detects energy management high-voltage interlock circuit 5 V reference voltage is less than 1.5 V.

P0D18

The hybrid powertrain control module 2 detects energy management high-voltage interlock circuit 5 V reference voltage is greater than 1.2 V before applying 5 V or the signal voltage is greater than 2.2 V after applying 5 V.

Action Taken When the DTC Sets

- DTCs P0D17 and P0D18 are Type A DTCs.
- The hybrid powertrain control module 2 opens the high-voltage charger contactors.

Conditions for Clearing the DTC

DTCs P0D17 and P0D18 are Type A DTCs.

Diagnostic Aids

- Test for a fully engaged hybrid battery pack high voltage manual disconnect whenever an open high-voltage interlock circuit condition is observed. The hybrid battery pack high-voltage manual disconnect must be pressed down fully in order to engage the high-voltage interlock circuit terminals.
- The high-voltage interlock circuit is also routed through several in-line connectors and modules.
- The hybrid powertrain control module 2 will source 12 mA on the charge high-voltage interlock circuit anytime the charge cord is plugged in.

  Note: The following diagnostic aid applies for both current and history DTCs.

- Tapping or wiggling the F115 Hybrid/EV Battery Pack Fuse Cover may duplicate the condition.

Reference Information

Schematic Reference

Hybrid Energy Storage Schematics

Connector End View Reference

Component Connector End Views

Description and Operation

Drive Motor Battery System Description

Electrical Information Reference

- Circuit Testing
- Connector Repairs
- Testing for Intermittent Conditions and Poor Connections
- Wiring Repairs

DTC Type Reference

Powertrain Diagnostic Trouble Code (DTC) Type Definitions

Scan Tool Reference

Control Module References for scan tool information

Special Tools

EL-48900 HEV Safety Kit

For equivalent regional tools, refer to Special Tools .

Circuit/System Verification

Ignition ON, observe the hybrid powertrain control module 2 Battery Charging System High-Voltage Interlock Circuit Status parameter.

The parameter should indicate a PASS condition.

Circuit/System Testing

Danger: High voltage enabling and disabling shall be only performed by High Voltage Qualified Technicians. The procedures for high-voltage enabling/disabling can be found in the service instructions and must be strictly followed at all times. The usage of the Protocol High Voltage Disabling/Enabling is mandatory. The High-Voltage Qualified

Technician is responsible for the adherence to the manufacturer's service instructions as well as current national legal regulations.

Failure to follow the procedures exactly as written may result in serious injury or death.

Questions regarding training can be answered by your national training centre.

Danger: Any hybrid/EV battery pack replacement shall be performed by High-Voltage Qualified Technicians only. The replacement procedure can be found in the service instruction and must be strictly followed at all times. The High-Voltage Qualified Technician is responsible for adherence to the manufacturer's service instructions as well as current national legal regulations. If the hybrid/EV battery pack needs to be replaced contact the Technical Assistance Centre for further instructions prior to removal of the battery pack.

Note: The charger high-voltage interlock circuit is routed through several in-line connectors.

1. Ignition OFF, disable high voltage at the A4 hybrid/EV battery pack. Refer to High Voltage Disabling .
2. Connect the 12 V battery.
3. Ignition ON, test for 4.8-5.2 V between the 5 V reference circuit terminal C at the S15 hybrid battery pack high- voltage manual disconnect housing and earth.
   If less than the specified range, test the 5 V reference circuit for a short to ground or an open/high resistance. If the circuit tests normal, replace the K114B hybrid powertrain control module 2.
   If greater than the specified range, test the 5 V reference circuit for a short to voltage. If the circuit tests normal, replace the K114B hybrid powertrain control module 2.
4. Ignition OFF and all vehicle systems OFF. It may take up to 2 minutes for all vehicle systems to power down. Test for 8-10k Ω between the signal circuit terminal D and earth.
   If less than the specified range, test the signal circuit for a short to ground. If the circuit tests normal, replace the K114B hybrid powertrain control module 2.
   If greater than the specified range, test the signal circuit for an open/high resistance. If the circuit tests normal, replace the K114B hybrid powertrain control module 2.
5. If all circuits test normal, test or replace the S15 hybrid battery pack high-voltage manual disconnect.

Component Testing

Test for 35-45 Ω between the following terminals of the S15 hybrid battery pack high-voltage manual disconnect:

- Terminal A and terminal B
- Terminal C and terminal D

If not within the specified range, replace the S15 hybrid battery pack high-voltage manual disconnect.

Repair Instructions

Perform the Diagnostic Repair Verification after completing the repair.

Control Module References for hybrid powertrain control module 2 and battery charger replacement, programming and set-up

&#169© Copyright Chevrolet. All rights reserved

DTC P0D5E

Diagnostic Instructions

- Perform the Diagnostic System Check - Vehicle prior to using this diagnostic procedure.
- Review Strategy Based Diagnosis for an overview of the diagnostic approach.
- Diagnostic Procedure Instructions provides an overview of each diagnostic category.

DTC Descriptor

DTC P0D5E: Charger Bus Discharge Too Long

Circuit/System Description

The battery energy control module will diagnose its own systems and determine when a fault condition is present. Diagnostics and system status is communicated from the battery energy control module to the hybrid/EV powertrain control module 2 through serial data. The hybrid/EV powertrain control module 2 is the host controller for diagnostic trouble code (DTC) information.

The hybrid/EV battery contains 5 high-voltage contactors and 2 transistors. The high-voltage contactors allow the high-voltage DC batteries to be connected to the vehicle or safely contain the high-voltage DC within the hybrid/EV battery assembly. The 5 high-voltage contactors are a main positive high-voltage contactor, main negative high-voltage contactor, charge positive high-voltage contactor, charge negative high-voltage contactor and multi-function high-voltage contactor. The 2 transistors are the precharge transistor and heater transistor. These contactors/transistors close and open in sequence and are controlled by the hybrid/EV powertrain control module 2. The hybrid/EV powertrain control module 2 supplies voltage to the control circuit for the high-voltage contactors/transistors. Earth is provided through the case earth.

Conditions for Running the DTC

P0D5E

- The charger contactors are commanded open.
- Runs once per charger contacts discharge event.
- None of the following DTCs are set: P0D4E or P0D4F.

OR

- No confirmed charger bus discharge test pass or fail received by the hybrid/EV powertrain control module 2 from the battery charger control module.
- This test runs every 10 seconds after charger discharge event if no confirmed charger bus discharge result is received by the hybrid/EV powertrain control module 2 from the battery charger control module.

Conditions for Setting the DTC

P0D5E

- High-voltage bus does not discharge to below 60 V within 1.5 seconds of the charger contactors being commanded open.
  OR
- With the charger contactors commanded open, current flowing to battery is greater than 2.5 A with the heater transistor enabled.

Action Taken When the DTC Sets

- DTC P0D5E is a type A DTC.
- All of the contactors will be prevented from closing.

Conditions for Clearing the DTC

- DTC P0D5E is a type A DTC.
- The Clear Secured High-Voltage DTCs reset function must be performed with a scan tool before clear codes.

Diagnostic Aids

Note: If the high-voltage contactors opened while under high-current load, replace the drive motor battery wire junction block relay. The following conditions could cause the high-voltage contactors to open while under high-current load:

- A collision resulting in supplemental inflatable restraint (SIR) deployment.
- A loss of power or earth to the hybrid/EV powertrain control module 2 while the vehicle is moving.

The precharge time can be affected by the following:

- A long precharge time may be caused by a stuck open hybrid/EV battery negative or hybrid/EV battery multi-function contactor.
- A long precharge time may be caused by a stuck ON hybrid/EV battery precharge transistor.
- A long precharge time may be caused by a short-circuit on the propulsion bus preventing the main bus from reaching its target voltage.
- A short precharge time may be caused by a hybrid/EV battery positive high-voltage contactor being stuck.
- A short precharge time may be caused by a positive high-voltage contactor being stuck.

Reference Information

Schematic Reference

Hybrid Energy Storage Schematics

Connector End View Reference

Component Connector End Views

Description and Operation

Drive Motor Battery System Description

Electrical Information Reference

- Circuit Testing
- Connector Repairs
- Testing for Intermittent Conditions and Poor Connections
- Wiring Repairs

DTC Type Reference

Powertrain Diagnostic Trouble Code (DTC) Type Definitions

Scan Tool Reference

Control Module References for scan tool information

Circuit/System Testing

Danger: High voltage enabling and disabling shall be only performed by High Voltage Qualified Technicians. The procedures for high-voltage enabling/disabling can be found in the service instructions and must be strictly followed at all times. The usage of the Protocol High Voltage Disabling/Enabling is mandatory. The High-Voltage Qualified Technician is responsible for the adherence to the manufacturer's service instructions as well as current national legal regulations.

Failure to follow the procedures exactly as written may result in serious injury or death.

Questions regarding training can be answered by your national training centre.

Danger: Any hybrid/EV battery pack replacement shall be performed by High-Voltage Qualified Technicians only. The replacement procedure can be found in the service instruction and must be strictly followed at all times. The High-Voltage Qualified Technician is responsible for adherence to the manufacturer's service instructions as well as

current national legal regulations. If the hybrid/EV battery pack needs to be replaced contact the Technical Assistance Centre for further instructions prior to removal of the battery pack.

1. Ignition OFF, disable the high voltage at the A4 hybrid/EV battery pack. Refer to High Voltage Disabling .
2. Connect the 12 V battery.
3. Disconnect the X2 harness connector at the A28 hybrid/EV battery contactor assembly.
4. Ignition OFF and all vehicle systems OFF. It may take up to 2 minutes for all vehicle systems to power down. Test for less than 10 Ω between the ground circuit terminal 5 and ground.
   If greater than the specified range, test the ground circuit for an open/high resistance.
5. Ignition ON, verify that a test lamp illuminates between the B+ circuit terminal 9 and ground.
   If the test lamp does not illuminate, test the B+ circuit for a short to ground or an open/high resistance. If the circuit tests normal and the B+ circuit fuse is open, replace the A4 hybrid/EV battery pack.
6. Ignition OFF, disconnect the X1 harness connector at the A28 hybrid/EV battery contactor assembly.
7. Ignition ON, test for less than 1 V between the following control circuit terminals and earth.
   - Terminal 6
   - Terminal 7
   - Terminal 9

   If greater than the specified range, test the appropriate control circuit for a short-circuit to voltage. If the circuit tests normal, replace the K114B hybrid/EV powertrain control module 2.
8. Ignition OFF, test for infinite resistance between the following control circuit terminals and earth.
   - Terminal 6
   - Terminal 7
   - Terminal 9

   If less than the specified value, test the appropriate control circuit for a short to ground. If the circuit tests normal, replace the K114B hybrid/EV powertrain control module 2.
9. Disconnect the X1 harness connector at the K114B hybrid/EV powertrain control module 2.
10. Test for less than 2 Ω in the control circuit end to end between the following terminals:
    - Terminal 6 X1 harness connector at the A28 hybrid/EV battery contactor assembly and terminal 10 X1 harness connector at the K114B hybrid/EV powertrain control module 2.
    - Terminal 7 X1 harness connector at the A28 hybrid/EV battery contactor assembly and terminal 3 X1 harness connector at the K114B hybrid/EV powertrain control module 2.
    - Terminal 9 X1 harness connector at the A28 hybrid/EV battery contactor assembly and terminal 5 X1 harness connector at the K114B hybrid/EV powertrain control module 2.

    If greater than the specified range, test the appropriate control circuit for an open-circuit/high resistance.
11. If all circuits test normal, replace the A4 hybrid/EV battery pack.

Repair Instructions

Perform the Diagnostic Repair Verification after completing the repair.

- Drive Motor Battery Replacement and Shipping Preparation
- Control Module References for hybrid/EV powertrain control module 2 replacement, programming and set-up

&#169© Copyright Chevrolet. All rights reserved

DTC P1A07, P1E93, P1E99, P1E9F or P1EA5

Diagnostic Instructions

- Perform the Diagnostic System Check - Vehicle prior to using this diagnostic procedure.
- Review Strategy Based Diagnosis for an overview of the diagnostic approach.
- Diagnostic Procedure Instructions provides an overview of each diagnostic category.

DTC Descriptors

DTC P1A07: Battery Energy Control Module 5 V Reference Circuit

DTC P1E93: Hybrid/EV Battery Interface Control Module 1 5 V Reference Circuit

DTC P1E99: Hybrid/EV Battery Interface Control Module 2 5 V Reference Circuit

DTC P1E9F: Hybrid/EV Battery Interface Control Module 3 5 V Reference Circuit

DTC P1EA5: Hybrid/EV Battery Interface Control Module 4 5 V Reference Circuit

Circuit/System Description

The drive motor battery contains 288 cells. Groups of three cells are welded together in parallel. There are a total of 96 cell groups in the drive motor battery assembly. These cell groups are electrically connected in-series. Each individual cell group is rated at 3.7 volts, for a nominal system voltage of 355 volts direct current. The battery cells are also grouped together into three sections. The first 90 cells/30 cell groups make up battery section one. This section is adjacent to the cowl and contains batteries 67 through to 96. Battery section two is located behind section one. It is made up of 72 cells/24 cell groups and contains batteries 43 through to 66. The transverse battery section is section number three, it is made up of the remaining 126 cells/42 cell groups and contains batteries 1 through to 42. The three battery sections are individually serviceable components.

The battery energy control module monitors the voltage of the 96 cell groups. Voltage sense lines are attached to each individual cell group, and these sense lines terminate at a connector located on the top surface of the battery section. A serviceable voltage sense harness joins this connector to a drive motor battery high-voltage interface control module, also located on the top surface of the battery section. The drive motor battery high-voltage interface control module encodes the voltage reading and transmits it to the battery energy control module through the battery control harness. There is one drive motor battery high-voltage interface control module located on battery sections one

and two, and two drive motor battery high-voltage interface control modules associated with battery section three. The drive motor battery high-voltage interface control module, voltage sense harnesses, battery control harness and battery energy control module are all considered serviceable components.

The battery energy control module will determine when a fault condition is present. Diagnostics and system status are communicated from the battery energy control module to hybrid/EV powertrain control module 2 through serial data. The hybrid/EV powertrain control module 2 is the host controller for diagnostic trouble code information.

Conditions for Running the DTC

P1A07

- The battery energy control module is awake and communicating.
- The 12 V battery voltage greater than or equal to 9 V.

P1E93, P1E99, P1E9F, P1EA5

- Ignition cycles from ON to OFF.
- The battery energy control module is awake and communicating.
- No loss of communications between the battery energy control module and any of the hybrid/EV battery interface control modules.
- The 2nd protection circuit diagnostic is not running.

Conditions for Setting the DTC

P1A07

The battery energy control module has detected a fault on the internal 5 V reference circuit.

P1E93, P1E99, P1E9F, P1EA5

- The 2nd protection circuit diagnostic is not running.
- A hybrid/EV battery interface control module has detected a fault on the internal 5 V reference circuit.

Action Taken When the DTC Sets

- DTCs P1A07 P1E93, P1E99, P1E9F, or P1EA5 are type B DTCs.
- If any of these DTCs are set, the vehicle will operate in a reduced power mode and electric only engine ON.

Conditions for Clearing the DTC

DTCs P1A07 P1E93, P1E99, P1E9F, or P1EA5 are type B DTCs.

Reference Information

Schematic Reference

Hybrid Energy Storage Schematics

Connector End View Reference

Component Connector End Views

Description and Operation

Drive Motor Battery System Description

Electrical Information Reference

- Circuit Testing
- Connector Repairs
- Testing for Intermittent Conditions and Poor Connections
- Wiring Repairs

DTC Type Reference

Powertrain Diagnostic Trouble Code (DTC) Type Definitions

Scan Tool Reference

Control Module References for scan tool information

Special Tools

EL-48900 HEV Safety Kit

For equivalent regional tools, refer to Special Tools .

Circuit/System Verification

Danger: High voltage enabling and disabling shall be only performed by High Voltage Qualified Technicians. The procedures for high-voltage enabling/disabling can be found

in the service instructions and must be strictly followed at all times. The usage of the Protocol High Voltage Disabling/Enabling is mandatory. The High-Voltage Qualified Technician is responsible for the adherence to the manufacturer's service instructions as well as current national legal regulations.

Failure to follow the procedures exactly as written may result in serious injury or death.

Questions regarding training can be answered by your national training centre.

Danger: Any hybrid/EV battery pack replacement shall be performed by High-Voltage Qualified Technicians only. The replacement procedure can be found in the service instruction and must be strictly followed at all times. The High-Voltage Qualified Technician is responsible for adherence to the manufacturer's service instructions as well as current national legal regulations. If the hybrid/EV battery pack needs to be replaced contact the Technical Assistance Centre for further instructions prior to removal of the battery pack.

If DTC P1A07, P1E93, P1E99, P1E9F, or P1EA5 is set, replace the A4 hybrid/EV battery pack.

Repair Instructions

Perform the Diagnostic Repair Verification after completing the repair.

- Drive Motor Battery Replacement and Shipping Preparation
- Control Module References for battery energy control module replacement and hybrid battery interface control modules 1-4, programming and set-up for the hybrid/EV battery pack replacement.

&#169© Copyright Chevrolet. All rights reserved

DTC P1E3D

Diagnostic Instructions

- Perform the Diagnostic System Check - Vehicle prior to using this diagnostic procedure.
- Review Strategy Based Diagnosis for an overview of the diagnostic approach.
- Diagnostic Procedure Instructions provides an overview of each diagnostic category.

DTC Descriptor

DTC P1E3D: Control Module Calculated Hybrid/EV Battery Performance

Circuit/System Description

The hybrid/EV powertrain control module 2 performs internal calculations multiple times and compares the results of these calculations to verify proper operation of the internal controller. The result of these calculations is a voltage. This voltage value is an internal value and cannot be measured externally.

Conditions for Running the DTC

- The 12 V battery voltage is greater than 9 V.
- The hybrid/EV powertrain control module 2 is awake.

Conditions for Setting the DTC

If the results of these calculations differ by more than one volt.

Action Taken When the DTC Sets

- DTC P1E3D is a type A DTC.
- The contactors will be opened.

Conditions for Clearing the DTC

DTC P1E3D is a type A DTC.

Reference Information

Schematic Reference

Hybrid Energy Storage Schematics

Connector End View Reference

Component Connector End Views

Description and Operation

Drive Motor Battery System Description

Electrical Information Reference

- Circuit Testing
- Connector Repairs
- Testing for Intermittent Conditions and Poor Connections
- Wiring Repairs

DTC Type Reference

Powertrain Diagnostic Trouble Code (DTC) Type Definitions

Scan Tool Reference

Control Module References for scan tool information

Circuit/System Verification

If the DTC is set, replace the K114B hybrid/EV powertrain control module 2.

Repair Instructions

Perform the Diagnostic Repair Verification after completing the diagnostic procedure.

Control Module References for hybrid/EV powertrain control module 2 replacement, programming and set-up

&#169© Copyright Chevrolet. All rights reserved

DTC P1E92, P1E98, P1E9E or P1EA4

Diagnostic Instructions

- Perform the Diagnostic System Check - Vehicle prior to using this diagnostic procedure.
- Review Strategy Based Diagnosis for an overview of the diagnostic approach.
- Diagnostic Procedure Instructions provides an overview of each diagnostic category.

DTC Descriptors

DTC P1E92: Hybrid/EV Battery Interface Control Module 1 Cell Balancing Circuit

DTC P1E98: Hybrid/EV Battery Interface Control Module 2 Cell Balancing Circuit

DTC P1E9E: Hybrid/EV Battery Interface Control Module 3 Cell Balancing Circuit

DTC P1EA4: Hybrid/EV Battery Interface Control Module 4 Cell Balancing Circuit

Circuit/System Description

To maintain a similar state of charge on the cell groups, the hybrid/EV powertrain control module 2 looks at the cell group voltages and determines which cell groups need energy removed in order to maintain the battery groups at a similar state of charge. This is known as cell balancing. There is a resistor wired in parallel with the cell group and a transistor switch in series with the resistor internal to the drive motor battery high-voltage interface control module. The hybrid/EV powertrain control module 2 sends a command to the battery energy control module to begin cell balancing through the drive motor battery high-voltage interface control modules.

Conditions for Running the DTC

- The battery energy control module is awake and communicating.
- The high-voltage fault circuit diagnostic is not running.
- None of the following DTCs are set, P1E8E, P1E94, P1E9A, P1EA0, U2401, U2603, U2604, U2605 or U2606.

Conditions for Setting the DTC

The hybrid/EV battery interface control module has detected an internal cell balancing switch fault.

Action Taken When the DTC Sets

- DTCs P1E92, P1E98, P1E9E, and P1EA4 are type B DTCs.
- Cell balancing is disabled.

Conditions for Clearing the DTC

DTCs P1E92, P1E98, P1E9E, and P1EA4 are type B DTCs.

Reference Information

Schematic Reference

Hybrid Energy Storage Schematics

Connector End View Reference

Component Connector End Views

Description and Operation

Drive Motor Battery System Description

Electrical Information Reference

- Circuit Testing
- Connector Repairs
- Testing for Intermittent Conditions and Poor Connections
- Wiring Repairs

DTC Type Reference

Powertrain Diagnostic Trouble Code (DTC) Type Definitions

Scan Tool Reference

Control Module References for scan tool information

Special Tools

EL-48900 HEV Safety Kit

For equivalent regional tools, refer to Special Tools .

Circuit/System Verification

Danger: High voltage enabling and disabling shall be only performed by High Voltage Qualified Technicians. The procedures for high-voltage enabling/disabling can be found in the service instructions and must be strictly followed at all times. The usage of the Protocol High Voltage Disabling/Enabling is mandatory. The High-Voltage Qualified Technician is responsible for the adherence to the manufacturer's service instructions as well as current national legal regulations.

Failure to follow the procedures exactly as written may result in serious injury or death.

Questions regarding training can be answered by your national training centre.

Danger: Any hybrid/EV battery pack replacement shall be performed by High-Voltage Qualified Technicians only. The replacement procedure can be found in the service instruction and must be strictly followed at all times. The High-Voltage Qualified Technician is responsible for adherence to the manufacturer's service instructions as well as current national legal regulations. If the hybrid/EV battery pack needs to be replaced contact the Technical Assistance Centre for further instructions prior to removal of the battery pack.

1. Verify that DTC P0B3B, P0B3C, P0B3D, P0B3E, P0B40, P0B41, P0B42, P0B43, P0B45, P0B46, P0B47, P0B48, P0B4A, P0B4B, P0B4D, P0B4C, P0B4F, P0B50, P0B51, P0B52, P0B54, P0B55, P0B56, P0B57, P0B59, P0B5A, P0B5B, P0B5C, P0B5E, P0B60, P0B5F, P0B61, P0B63, P0B64, P0B65, P0B66, P0B69, P0B68, P0B6A, P0B6D, P0B6B, P0B6E, P0B70, P0B6F, P0B72, P0B74, P0B73, P0B75, P0B77, P0B78, P0B79, P0B7A, P0B7D, P0B7C, P0B7E, P0B7F, P0B81, P0B82, P0B83, P0B84, P0B86, P0B87, P0B88, P0B89, P0B8B, P0B8C, P0B8D, P0B8E, P0B90, P0B91, P0B92, P0B93, P0B95, P0B96, P0B97, P0B98, P0B9A, P0B9B, P0B9C, P0B9D, P0B9F, P0BA1, P0BA0, P0BA2, P0BA4, P0BA5, P0BA6, P0BA7, P0BA9, P0BAA, P0BAB, P0BAC, P0BAE, P0BAF, P0BB0 ,P0BB1, P0BB3, P0BB4, P0BB5, P0BB6, P0BB8, P0BB9, P0BBA, P0BBB, P1B16, P1B17, P1B18, P1B19, P1B1A, P1B1B, P1B1C, P1B1D, P1B1E, P1B1F, P1B20, P1B21, P1B22, P1B23, P1B24, P1B25, P1B26, P1B27, P1B28, P1B29, P1B2B, P1B2A, P1B2C, P1B2D, P1B45, P1B46, P1B47, P1B48, P1B49, P1B4A, P1B4B, P1B4C, P1B4D, P1B4E, P1B4F, P1B50, P1B51, P1B52, P1B53, P1B54, P1B55, P1B56, P1B57, P1B58, P1B59, P1B5A, P1B5B, P1B5C, P1B5D, P1B5E, P1B5F, P1B60 ,P1B61 ,P1B62, P1B63, P1B64, P1B65, P1B66, P1B67, P1B68, P1B69, P1B6A, P1B6B, P1B6C, P1B6D, P1B6E, P1B6F, P1B70, P1B71, P1B72, P1B73, P1B74, P1B75, P1B76, P1B77, P1B78, P1B79, P1B7A, P1B7B, P1B7C, P1B7D, P1B7F, P1B7E, P1B80, P1B81, P1B82, P1B83, P1B84, P1B85, P1B86, P1B87, P1B88, P1B89, P1B8A, P1B8B, P1B8C, P1B8D, P1B8E, P1B8F, P1B90, P1B91, P1B92, P1B93, P1B94, P1B95, P1B97, P1B96, P1B98, P1B99, P1B9A, P1B9B, P1B9C, P1B9D, P1B9E, P1B9F, P1BA0, P1BA1, P1BA2, P1BA3, P1BA4, P1BA5, P1BA6, P1BA7, P1BA8, P1BA9 ,P1BAB, P1BAA, P1BAC, P1BAD, P1BAE, P1BAF, P1BB0, P1BB1, P1BB2, P1BB3, P1BB4, P1BB5, P1BB6, P1BB7, P1BB8, P1BB9, P1BBA, P1BBB, P1BBC, P1BBD, P1BBE, P1BBF, P1BC0, P1BC1, P1BC2, P1BC3, P1BC4, P1BC5, P1BC6, P1BC7, P1BC8, P1BC9, P1BCA, P1BCB, P1BCC, P1BCE, P1BCD, P1BCF, P1BD0, P1BD2, P1BD1, P1BD3, P1BD4, P1BD5, P1BD6, P1BD7, P1BD8, P1BD9, P1BDA, P1BDB, P1BDD, P1BDC, P1BDE, P1BDF, P1BE1, P1BE0, P1BE3, P1BE2, P1BE4, P1BE5, P1BE6, P1BE7, P1BE8, P1BE9, P1BEA, P1BEB, P1BEC, P1BED, P1BEE, P1BF0, P1BEF, P1BF1, P1BF2, P1BF4, P1BF3, P1BF5, P1BF4, P1BF7, P1BF8, P1BF9, P1BFA, P1BFB, P1BFC, P1BFD, P1BFE, P1E01, P1E02, P1E03, P1E04, P1E05, P1E06, P1E4C, P1E4D, P1E4E, P1E4F, P1E50, P1E51, P1E52, P1E53, P1E54, P1E55, P1E56, P1E57, P1E58, P1E59, P1E5A, P1E5B, P1E5C, P1E5D, P1E5E, P1E5F, P1E60, P1E62, P1E61, P1E63, P1E64, P1E65, P1E66, P1E67, P1E68, P1E69, P1E6A, P1E6B, P1E6D, P1E6C, P1E6E, P1E6F, P1E70, P1E71, P1E72, P1E73, P1E74, P1E76, P1E75, P1E77, P1E78, P1E79, P1E7A, P1E7B, P1E7C, P1E7D, P1E7E, P1E7F, P1E80, P1E81, P1E82, P1E83,

P1E84, P1E85, P1E86, P1E87, P1E88, P1E89 or P1E8A is not set.
If any of the DTCs are set, refer to Diagnostic Trouble Code (DTC) List - Vehicle .

2. If DTC P1E92, P1E98, P1E9E, or P1EA4 is set, replace the A4 hybrid/EV battery pack.

Repair Instructions

Perform the Diagnostic Repair Verification after completing the repair.

- Drive Motor Battery Replacement and Shipping Preparation
- Control Module References for battery energy control module replacement and hybrid battery interface control modules 1-4, programming and set-up for the hybrid/EV battery pack replacement.

&#169© Copyright Chevrolet. All rights reserved

DTC P1EAB or P1EAC

Diagnostic Instructions

- Perform the Diagnostic System Check - Vehicle prior to using this diagnostic procedure.
- Review Strategy Based Diagnosis for an overview of the diagnostic approach.
- Diagnostic Procedure Instructions provides an overview of each diagnostic category.

DTC Descriptors

DTC P1EAB: Battery Energy Control Module Hybrid/EV Battery Cell High Voltage

DTC P1EAC: Hybrid/EV Battery Cell Over-voltage Signal Circuit Performance

Circuit/System Description

The 2nd protection is a redundant method to monitor cell group overvoltage. The four hybrid/EV battery interface control modules independently read and test each cell group. The 2nd protection circuit fault is the actual hardwire signal from the four hybrid/EV battery interface control modules to the battery energy control module and terminating in the hybrid/EV powertrain control module 2. The hybrid/EV powertrain control module 2 diagnoses this line to determine when a cell group over-voltage condition exists.

The 2nd protection self test diagnostic is used to check the signal circuit. The battery energy control module performs this test once every power down cycle. When run/crank input signal transitions low and after a calibrated delay, the battery energy control module informs the hybrid/EV powertrain control module 2, via serial data communication bus that it is about to run the diagnostics on the 2nd protection circuit. The battery energy control module then proceeds to command, via internal serial data, each hybrid/EV battery interface control module to run the check on its hardwire output. Each of the four hybrid/EV battery interface control modules pulls the signal circuit low and releases it, in sequence. If any pulses are missing, the battery energy control module is able to diagnose which hybrid/EV battery interface control module(s) has a fault, and sets a related fault, and sends this information to the hybrid/EV powertrain control module 2 on the serial data

Conditions for Running the DTC

P1EAB

- The battery energy control module and hybrid/EV powertrain control module 2 are awake and communicating.
- DTC P1EAC or U185A is not set

P1EAC

- The battery energy control module and hybrid/EV powertrain control module 2 are awake and communicating.
- Ignition cycles from ON to OFF.
- Ignition is OFF for 500 ms.
- The 12 V battery voltage greater than or equal to 9 V.
- None of the following DTCs are set; P1E8E, P1E94, P1E9A or P1EA0.
- No loss of communications between the battery energy control module and any of the hybrid/EV battery interface control modules.

Conditions for Setting the DTC

P1EAB

A cell over-voltage is detected.

P1EAC

The hybrid/EV powertrain control module 2 has detected a fault with the 2nd protection fault flag.

Action Taken When the DTC Sets

- DTCs P1EAB and P1EAC are type A DTCs.
- If any of these DTCs are set, the vehicle will operate in a reduced power mode and electric only engine ON.
- Once Vehicle Power has been turned OFF all of the contactors will be prevented from closing.

Conditions for Clearing the DTC

- DTCs P1EAB and P1EAC are type A DTCs.
- After the repair, with a scan tool, perform the Clear Secured High-Voltage DTCs to prevent DTCs from resetting.
- Vehicle Power cycled from ON to OFF after code clear

Reference Information

Schematic Reference

Hybrid Energy Storage Schematics

Connector End View Reference

Component Connector End Views

Description and Operation

Drive Motor Battery System Description

Electrical Information Reference

- Circuit Testing
- Connector Repairs
- Testing for Intermittent Conditions and Poor Connections
- Wiring Repairs

DTC Type Reference

Powertrain Diagnostic Trouble Code (DTC) Type Definitions

Scan Tool Reference

Control Module References for scan tool information

Special Tools

EL-48900 HEV Safety Kit

For equivalent regional tools, refer to Special Tools .

Circuit/System Verification

Verify that DTC P0B3B, P0B3D, P0B3E, P0B40, P0B42, P0B43, P0B45, P0B47, P0B48, P0B4A, P0B4C, P0B4D, P0B4F, P0B51, P0B54, P0B52, P0B56, P0B57, P0B59, P0B5B, P0B5C, P0B5E, P0B60, P0B61, P0B63, P0B65, P0B66, P0B68, P0B6A, P0B6B, P0B6D, P0B6F, P0B70, P0B72, P0B74, P0B75, P0B77, P0B79, P0B7A, P0B7C, P0B7E, P0B7F, P0B81, P0B83, P0B84, P0B86, P0B88, P0B89, P0B8B, P0B8D, P0B8E, P0B90, P0B92, P0B93, P0B95, P0B97, P0B98, P0B9A, P0B9C, P0B9D, P0B9F, P0BA1, P0BA2, P0BA4, P0BA6, P0BA7, P0BA9, P0BAB, P0BAC, P0BAE, P0BB0, P0BB1, P0BB3, P0BB5, P0BB6, P0BB8, P0BBA, P0BBB, P1B17, P1B18, P1B1A, P1B1B, P1B1D, P1B1E, P1B20, P1B21, P1B23, P1B24, P1B26, P1B27, P1B28, P1B29, P1B2A, P1B2B, P1B2C, P1B2D, P1B46, P1B47, P1B4A, P1B4C, P1B4D, P1B4F, P1B50, P1B52, P1B53, P1B55, P1B56, P1B58, P1B59, P1B5B, P1B5C, P1B5E, P1B5F, P1B61, P1B64, P1B62, P1B65, P1B67, P1B68, P1B6A, P1B6B, P1B6D, P1B6E, P1B70, P1B71, P1B73, P1B74, P1B76, P1B77, P1B79, P1B7A, P1B7C, P1B7D, P1B7F, P1B80, P1B82, P1B83, P1B85, P1B86, P1B88, P1B89, P1B8B, P1B8C, P1B8E, P1B8F, P1B91, P1B92, P1B94, P1B95, P1B97, P1B98, P1B9A, P1B9B, P1B9D, P1B9E, P1BA0, P1BA1, P1BA3, P1BA4, P1BA6, P1BA7, P1BA9, P1BAA, P1BAC, P1BAD, P1BAF, P1BB0, P1BB2, P1BB3, P1BB5, P1BB6, P1BB8, P1BB9, P1BBB, P1BBC, P1BBE, P1BBF, P1BC1, P1BC2, P1BC4, P1BC5, P1BC7, P1BC8, P1BCA, P1BCB,

P1BCD, P1BCE, P1BD0, P1BD1, P1BD3, P1BD4, P1BD6, P1BD7, P1BD9, P1BDA, P1BDC, P1BDD, P1BDF, P1BE0, P1BE2, P1BE3, P1BE5, P1BE6, P1BE8, P1BE9, P1BEB, P1BEC, P1BEE, P1BEF, P1BF1, P1BF2, P1BF4, P1BF5, P1BF7, P1BF8, P1BFA, P1BFB, P1BFD, P1BFE, P1E02, P1E03, P1E05, P1E06, P1E4C, P1E4D, P1E4E, P1E4F, P1E50, P1E51, P1E52, P1E53, P1E54, P1E55, P1E56, P1E57, P1E58, P1E59, P1E5A, P1E5B, P1E5C, P1E5D, P1E5E, P1E5F, P1E60, P1E61, P1E62, P1E63, P1E64, P1E65, P1E66, P1E67, P1E68, P1E69, P1E6A, P1E6B, P1E6C, P1E6D, P1E6E, P1E6F, P1E70, P1E71, P1E72, P1E73, P1E74, P1E75, P1E76, P1E77, P1E78, P1E79, P1E7A, P1E7B, P1E7C, P1E7D, P1E7E, P1E7F, P1E80, P1E81, P1E82, P1E83, P1E84, P1E85, P1E86, P1E87, P1E88, P1E89, P1E8A, U2603, U2604, U2605 or U2606 is not set.

If DTC is set, refer to Diagnostic Trouble Code (DTC) List - Vehicle .

Circuit/System Testing

Danger: High voltage enabling and disabling shall be only performed by High Voltage Qualified Technicians. The procedures for high-voltage enabling/disabling can be found in the service instructions and must be strictly followed at all times. The usage of the Protocol High Voltage Disabling/Enabling is mandatory. The High-Voltage Qualified Technician is responsible for the adherence to the manufacturer's service instructions as well as current national legal regulations.

Failure to follow the procedures exactly as written may result in serious injury or death.

Questions regarding training can be answered by your national training centre.

Danger: Any hybrid/EV battery pack replacement shall be performed by High-Voltage Qualified Technicians only. The replacement procedure can be found in the service instruction and must be strictly followed at all times. The High-Voltage Qualified Technician is responsible for adherence to the manufacturer's service instructions as well as current national legal regulations. If the hybrid/EV battery pack needs to be replaced contact the Technical Assistance Centre for further instructions prior to removal of the battery pack.

1. Ignition OFF, disable the high voltage at the A4 hybrid/EV battery pack. Refer to High Voltage Disabling
2. Connect the 12 V battery.
3. Disconnect the X2 harness connector at the A28 hybrid/EV battery contactor assembly.
4. Ignition ON, test for 4.8-5.2 V between the over-voltage signal circuit terminal 6 and earth.
   If less than the specified range, test the over-voltage signal circuit for a short-circuit to earth or an open/high resistance. If the circuit tests normal, replace the K114B hybrid/EV powertrain control module 2. After the repair, with a scan tool, perform the Clear Secured High-Voltage DTCs .
   If greater than the specified range, test the over-voltage signal circuit for a short-circuit to voltage. If the circuit tests normal, replace the K114B hybrid/EV powertrain control module 2. After the repair, with a scan tool, perform the Clear Secured High-Voltage DTCs .
5. If all circuits test normal, replace the A4 hybrid/EV battery pack.

Repair Instructions

Perform the Diagnostic Repair Verification after completing the repair.

- Drive Motor Battery Replacement and Shipping Preparation
- Control Module References for battery energy control module replacement and hybrid battery interface control modules 1-4, programming and set-up for the hybrid/EV battery pack replacement.

&#169© Copyright Chevrolet. All rights reserved

DTC P1F17

Diagnostic Instructions

- Perform the Diagnostic System Check - Vehicle prior to using this diagnostic procedure.
- Review Strategy Based Diagnosis for an overview of the diagnostic approach.
- Diagnostic Procedure Instructions provides an overview of each diagnostic category.

DTC Descriptor

DTC P1F17: System Isolation/Impact Sensor Fault - Hybrid/EV Battery System Contactors Open

Circuit/System Description

The hybrid/EV powertrain control module 2 will set DTC P1F17 if the hybrid/EV powertrain control module has detected a passive loss of isolation, the supplemental inflatable restraint sensors are not working or has lost communication with the hybrid/EV powertrain control module or the supplemental inflatable restraint module.

Conditions for Running the DTC

- Vehicle ON.
- The 12 V battery voltage is greater than 9 V.

Conditions for Setting the DTC

- P0AA6 is set in the hybrid/EV powertrain control module.
- DTCs B0083-B0088 are set in the supplemental inflatable restraint module.

  OR
- P0AA6 is set in the hybrid/EV powertrain control module.
- DTC U184E is set.

  OR
- The hybrid/EV powertrain control module 2 has lost communication with the hybrid/EV powertrain control module.
- DTC U184E is set.

OR

- The hybrid/EV powertrain control module 2 has lost communication with the hybrid/EV powertrain control module.
- DTCs B0083-B0088 are set in the supplemental inflatable restraint module.

Action Taken When the DTC Sets

- DTC P1F17 is a type A DTC.
- All of the contactors will be prevented from closing.

Conditions for Clearing the DTC

- DTC P1F17 is a type A DTC.
- The Clear Secured High-Voltage DTCs reset function must be performed with a scan tool before clear codes.

Reference Information

Schematic Reference

Hybrid Energy Storage Schematics

Connector End View Reference

Component Connector End Views

Description and Operation

Drive Motor Battery System Description

Electrical Information Reference

- Circuit Testing
- Connector Repairs
- Testing for Intermittent Conditions and Poor Connections
- Wiring Repairs

DTC Type Reference

Powertrain Diagnostic Trouble Code (DTC) Type Definitions

Scan Tool Reference

Control Module References for scan tool information

Circuit/System Verification

Danger: Any hybrid/EV battery pack replacement shall be performed by High-Voltage Qualified Technicians only. The replacement procedure can be found in the service instruction and must be strictly followed at all times. The High-Voltage Qualified Technician is responsible for adherence to the manufacturer's service instructions as well as current national legal regulations. If the hybrid/EV battery pack needs to be replaced contact the Technical Assistance Centre for further instructions prior to removal of the battery pack.

1. Verify that no other DTCs are set.
   If any of the DTCs are set, refer to Diagnostic Trouble Code (DTC) List - Vehicle .
2. Verify that the K36 inflatable restraint sensing and diagnostic module is programmed with the correct software calibration.
   If the correct software is not installed, program the K36 inflatable restraint sensing and diagnostic module.
3. Vehicle in Service Mode, observe the scan tool Crash Event Detected parameter. The reading should be No.
   If the reading is yes, perform the Clear Secured High-Voltage DTCs function.
4. Perform the Clear Secured High-Voltage DTCs function. If DTC P1F17 resets and no other DTCs are set, replace the K114B hybrid/EV powertrain control module 2.

Repair Instructions

Perform the Diagnostic Repair Verification after completing the repair.

Control Module References for hybrid/EV powertrain control module 2 and inflatable restraint sensing and diagnostic module replacement, programming and set-up

&#169© Copyright Chevrolet. All rights reserved

Loss of Isolation on the High-Voltage Main Bus

Danger: Ensure all High-Voltage safety procedures are followed. Failure to follow the procedure exactly as written may result in serious injury or death.

Danger: Before working on any high voltage system, be sure to wear the following Personal Protection Equipment:

- Safety glasses with appropriate side shields when within 50 feet of the vehicle, either indoors or outdoors
- Certified and up-to-date Class "0" Insulation gloves rated at 1,000 V with leather protectors
  - Visually and functionally inspect the gloves before use.
  - Wear the Insulation gloves at all times when working with the high- voltage battery assembly, whether the system is energised or not.

Failure to follow the procedure exactly as written may result in serious injury or death.

Danger: This vehicle is equipped with a high-voltage battery that is completely isolated from the chassis earth. Never utilise AC powered test equipment to probe the high voltage system. Serious injury, death and component damage could occur if the high-voltage system is earthed through the electric utility.

Failure to follow the procedure exactly as written may result in serious injury or death.

Danger: Any hybrid/EV battery pack replacement shall be performed by High-Voltage Qualified Technicians only. The replacement procedure can be found in the service instruction and must be strictly followed at all times. The High-Voltage Qualified Technician is responsible for adherence to the manufacturer's service instructions as well as current national legal regulations. If the hybrid/EV battery pack needs to be replaced contact the Technical Assistance Centre for further instructions prior to removal of the battery pack.

Special Tools

EL-48900 HEV Safety Kit

For equivalent regional tools, refer to Special Tools .

Loss of Isolation on the High-Voltage Main Bus

Note: Wear your High-Voltage Insulation gloves until you have determined that a high-voltage exposure risk is no longer present.

1. Ignition OFF, disable the high voltage at the A4 hybrid battery pack. Refer to High Voltage Disabling .
2. Connect the 12 V battery.
3. Ignition ON, verify that DTC P0AA1, P0AD9, P0ADD, P0AE2, P0AE4, P0D0A, P0D11, P1EBC-P1EBF, P1EC0 or P1EC3-P1EC5 is not set.

If any DTC is set, diagnose them first. Refer to DTC P0AA1, P0AD9, P0ADD, P0AE2, P0AE4, P0D0A, P0D11, P1EBC-P1EBF, P1EC0 or P1EC3-P1EC5 .

4. Ignition OFF, disconnect the 12 V battery. Refer to Battery Negative Cable Disconnection and Connection .

   Note: The following continuity tests must be performed using an Insulation Multimeter. Select the Isolation test setting, then select the 500 V range.

5. Using the Insulation Multimeter, test for greater than 750k Ω between the circuit terminals listed below and ground.
   - A28 Hybrid battery contactor assembly harness connector terminal A +300 V X4.
   - A28 Hybrid battery contactor assembly harness connector terminal B -300 V X4.

   If the test result is less than the specified value, disconnect the X356A connector at the K1 14 V power module. Test for greater than 750k Ω. If the test result is greater than the specified value, replace the K1 14 V power module. If the test result is less than the specified value, replace the 300 V DC cables.
6. Test for greater than 750k Ω between the circuit terminals listed below and earth.
   - T6 Power inverter module harness connector terminal A -300 V X3.
   - T6 Power inverter module harness connector terminal B +300 V X3.

   If the test result is less than the specified value, replace the 300 V DC cables.
7. Disconnect the X4 harness connector at the T6 power inverter module.

   Note: The following continuity tests require both the air conditioning control module and cabin heater control module circuits to be isolated by performing the following test up to 3 times if a fault is detected.

8. Test for greater than 750k Ω between the circuit terminals listed below and earth.
   - Terminal A +300 V X4.
   - Terminal B -300 V X4.

   If the test result is less than the specified value, disconnect the X2 connector at the G1 air conditioning control module. Test for greater than 750k Ω between the circuit terminal and earth. If the test result is greater than the specified value, replace the G1 air conditioning control module.
   If the test result is less than the specified value, with the X2 connector at the G1 air conditioning control module disconnected. Disconnect the X2 connector at the K10 cabin heater control module. Test for greater than 750k Ω between the circuit terminal and earth. If the test result is greater than the specified value, replace the K10 cabin heater control module. If the test result is less than the specified value, replace the 300 V DC cables.
9. Disconnect the X5 harness connector at the at the T6 power inverter module

   Note: There may be up to a 5 second delay for proper test results to be displayed.

10. Test for greater than 750k Ω between the 3-phase cable circuit terminals listed below and earth.
    - Terminal 1 300 V X5.
    - Terminal 2 300 V X5.
    - Terminal 3 300 V X5.

    If the test result is less than the specified value, disconnect the X2 connector at the M15A Drive Motor 1. Test for greater than 750k Ω between the circuit terminal X2 at the M15A Drive Motor 1 and earth. If the test result is greater than the specified value, replace the 3- phase cables. If the test result is less than the specified value, replace the M15A Drive Motor 1.
11. Disconnect the X6 harness connector at the T6 power inverter module.

12. Test for greater than 750k Ω between the 3-phase cable circuit terminals listed below and earth.
    - Terminal 1 300 V X6.
    - Terminal 2 300 V X6.
    - Terminal 3 300 V X6.

    If the test result is less than the specified value, disconnect the X2 connector at the M15A Drive Motor 1. Test for greater than 750k Ω between the circuit terminal X2 at the M15B Drive Motor 2 and earth. If the test result is greater than the specified value, replace the 3- phase cables. If the test result is less than the specified value, replace the M15B Drive Motor 2.
13. Disconnect the X8 harness connector at the power inverter module.
14. Test for greater than 1.0M Ω between the 3-phase cable circuit terminals listed below and earth.
    - Terminal 1 300 V X8.
    - Terminal 2 300 V X8.
    - Terminal 3 300 V X8.

    If the test result is less than the specified value, replace the G5 transmission fluid pump - auxiliary.
15. Test for greater than 750k Ω between the T6 power inverter module circuit terminals listed below and earth.
    - Terminal A +300 V X3.
    - Terminal B -300 V X3.
    - Terminal A +300 V X4.
    - Terminal B -300 V X4.
    - Terminal 1 300 V X5.
    - Terminal 2 300 V X5.
    - Terminal 3 300 V X5.
    - Terminal 1 300 V X6.
    - Terminal 2 300 V X6.
    - Terminal 3 300 V X6.
    - Terminal 1 300 V X8.
    - Terminal 2 300 V X8.
    - Terminal 3 300 V X8.

    If the test result is less than the specified value, replace the T6 power inverter module.
16. If all circuits test normal, replace the A4 hybrid battery pack.

Repair Instructions

Perform the Diagnostic Repair Verification after completing the repair.

- Drive Motor Battery Replacement and Shipping Preparation

- 300 Volt Battery Positive and Negative Cable Replacement Link to 207100
- Air Conditioning and Drive Motor Battery Cooling Compressor Replacement
- Heater Coolant Heater Replacement
- Accessory DC Power Control Module Replacement
- Control Module References for the T6 power inverter module replacement, programming and set-up

&#169© Copyright Chevrolet. All rights reserved

Hybrid\EV Battery Voltage Present

Danger: High voltage enabling and disabling shall be only performed by High Voltage Qualified Technicians. The procedures for high-voltage enabling/disabling can be found in the service instructions and must be strictly followed at all times. The usage of the Protocol High Voltage Disabling/Enabling is mandatory. The High-Voltage Qualified Technician is responsible for the adherence to the manufacturer's service instructions as well as current national legal regulations.

Failure to follow the procedures exactly as written may result in serious injury or death.

Questions regarding training can be answered by your national training centre.

Danger: This vehicle is equipped with a high-voltage battery that is completely isolated from the chassis earth. Never utilise AC powered test equipment to probe the high voltage system. Serious injury, death and component damage could occur if the high-voltage system is earthed through the electric utility.

Failure to follow the procedure exactly as written may result in serious injury or death.

Danger: Any hybrid/EV battery pack replacement shall be performed by High-Voltage Qualified Technicians only. The replacement procedure can be found in the service instruction and must be strictly followed at all times. The High-Voltage Qualified Technician is responsible for adherence to the manufacturer's service instructions as well as current national legal regulations. If the hybrid/EV battery pack needs to be replaced contact the Technical Assistance Centre for further instructions prior to removal of the battery pack.

Special Tools

- *EL-50209* High-Voltage Terminal Cover
- *EL-48900* HEV Safety Kit

For equivalent regional tools, refer to Special Tools .

1. Review the high-voltage safety information prior to performing the High-Voltage Disabling procedure. Refer to High Voltage Safety .
2. The Servicing the A4 Battery Pack Assembly or 360 V DC Cables procedure has been performed.
   The procedure has not been performed. Refer to High Voltage Disabling before continuing to the next step.
3. Disconnect the X1 and X2 harness connectors at the A28 hybrid battery contactor assembly.
4. Vehicle in Service Mode, using the DMM, verify that the voltage measures less than 1 V at the following points and earth:
   - Terminal 2 X1.
   - Terminal 4 X1.
   - Terminal 6 X1.

- Terminal 7 X1.
- Terminal 9 X1.
- Terminal 11 X1.

  If greater than the specified range, test the appropriate control circuit for a short-circuit to voltage. If the circuit tests normal, replace the K114B hybrid/EV powertrain control module 2.

5. Vehicle OFF, test for infinite resistance between control circuit terminal 2 X2 harness connector at the A28 hybrid/EV battery contactor assembly and earth.
   If less than the specified value, test the control circuit for a short to ground. If the circuit tests normal, replace the K114B hybrid/EV powertrain control module 2.

Note:

- Wear your High-Voltage Insulation gloves until you have determined that a high-voltage exposure risk is no longer present.
- A 9 V battery can be used to test the DMM.

6. Test the DMM by measuring a 12 V battery.
   If the DMM does not properly measure a 12 V battery, repair or replace the DMM and repeat all voltage measurements.
7. Using the DMM, verify the voltage measures less than 1 V at the following points and earth:
   If the DMM does not properly measure a 12 V battery, repair or replace the DMM and repeat all voltage measurements.
8. Disconnect the high-voltage interlock harness connector listed below at the A28 hybrid/EV battery contactor assembly if not already disconnected.
   - F118 hybrid/EV battery pack connector jumper connector.
   - X6 14 V power module jumper connector.
   - X7 battery charger jumper connector.
9. Disconnect the X4 harness connector at the A28 hybrid/EV battery contactor assembly.
10. Verify that the voltage has been disabled at the X4 harness connector at the A28 hybrid/EV battery contactor assembly. Using the DMM, verify that the voltage measures less than 3 V at the following points:
    - High-voltage DC (-360 V) negative terminal B to vehicle chassis earth.
    - High-voltage DC (+360 V) positive terminal A to vehicle chassis earth.
    - High-voltage DC (+360 V) positive terminal A and high- voltage DC (-360 V) negative terminal B

      If greater than the specified range, leave the DMM connected to the terminals until the voltage drops below 3 V to allow the high-voltage capacitors to discharge. Continue to the next step once the voltage is below 3 V.
11. Disconnect the X5 harness connector at the A28 hybrid/EV battery contactor assembly.
12. Verify that the voltage has been disabled at the X5 harness connector at the A28 hybrid/EV battery contactor assembly. Using the DMM, verify that the voltage measures less than 3 V at the following points:
    - High-voltage DC (-360 V) negative terminal B to vehicle chassis earth.
    - High-voltage DC (+360 V) positive terminal A to vehicle chassis earth.
    - High-voltage DC (+360 V) positive terminal A and high- voltage DC (-360 V) negative terminal B

      If greater than the specified range, leave the DMM connected to the terminals until the voltage drops below 3 V to allow the high-voltage capacitors to discharge. Continue to the next step once the voltage is below 3 V.

Note: Wear your High-Voltage Insulation gloves until you have determined that a high-voltage exposure risk is no longer present.

Danger: The Hybrid/EV battery has exposed high-voltage and the installation of EL-5029 is required to completely isolate the voltage during the Hybrid/EV battery removal. Failure to follow the procedure exactly as written may result in serious injury or death.

13. Disconnect the X1 harness connector at the A28 hybrid/EV battery contactor assembly.

    Note: Wear your High-Voltage Insulation gloves until you have determined that a high-voltage exposure risk is no longer present.

    Note: Lowering the battery slightly will assist with the installation of the EL-50209.

14. Install the EL-50209.
15. Lower the battery from the vehicle with the EL-50209 installed. Refer to Drive Motor Battery Replacement and Shipping Preparation
16. There is a stuck-closed contactor and a loss of isolation within the A4 hybrid/EV battery pack assembly. Replace the A4 hybrid/EV pack assembly.

Repair Instructions

Perform the Diagnostic Repair Verification after completing the repair.

Drive Motor Battery Replacement and Shipping Preparation

&#169© Copyright Chevrolet. All rights reserved

High-Voltage System Inspection

Vehicle Collision Detection

The Supplemental Inflatable Restraint (SIR) sensors are designed to identify the severity of a collision and from what direction a collision has occurred. The SIR sensors typically detect collision conditions for occupant impact-protection reasons. The hybrid powertrain control module 2 will open the high-voltage contactor relays and disable the vehicle whenever an SIR deployment occurs.

The supplemental inflatable restraint module transmits through serial data to the hybrid powertrain control module 2 whenever a sensor fault is detected or a collision event has been detected. The hybrid powertrain control module 2 will set a Crash Event Detected event and enter into a disable condition.

A complete inspection of the high-voltage system and components must be performed if the vehicle has been involved in a collision. The Crash Event Detected condition will remain active until cleared by the hybrid powertrain control module 2 Clear Secured High Voltage DTCs output control function of the scan tool.

Special Tools

- *EL-48900* HEV Safety Kit
- *EL-50211* Low-Voltage Jumper Harness Extension

For equivalent regional tools, refer to Special Tools .

Inspection Procedure

Danger: High voltage enabling and disabling shall be only performed by High Voltage Qualified Technicians. The procedures for high-voltage enabling/disabling can be found in the service instructions and must be strictly followed at all times. The usage of the Protocol High Voltage Disabling/Enabling is mandatory. The High-Voltage Qualified Technician is responsible for the adherence to the manufacturer's service instructions as well as current national legal regulations.

Failure to follow the procedures exactly as written may result in serious injury or death.

Questions regarding training can be answered by your national training centre.

Danger: High-voltage circuits should only be tested using a digital multimeter (DMM) and test leads with at least a CAT III rating, such as the J 39200-A Digital Multimeter. Failure to follow the procedures exactly as written may result in serious injury or death.

Danger: This vehicle is equipped with a high-voltage battery that is completely isolated from the chassis earth. Never utilise AC powered test equipment to probe the high

voltage system. Serious injury, death and component damage could occur if the high-voltage system is earthed through the electric utility.

Failure to follow the procedure exactly as written may result in serious injury or death.

Danger: Any hybrid/EV battery pack replacement shall be performed by High-Voltage Qualified Technicians only. The replacement procedure can be found in the service instruction and must be strictly followed at all times. The High-Voltage Qualified Technician is responsible for adherence to the manufacturer's service instructions as well as current national legal regulations. If the hybrid/EV battery pack needs to be replaced contact the Technical Assistance Centre for further instructions prior to removal of the battery pack.

1. The vehicle has been involved in a collision with body damage.
   If vehicle damage does not allow for repair, remove the A4 hybrid/EV battery pack from the vehicle. Refer to Drive Motor Battery Replacement and Shipping Preparation . Refer to www.recyclemybattery.com for recycling information.
2. Have the air bags been deployed?
   If the air bags have been deployed, refer to Air Bags Deployed Inspection.
3. Does the vehicle have right front end damage?
   If the vehicle has right front end damage, perform the high voltage disable procedure at the T18 battery charger. Refer to High Voltage Disabling . Perform a visual inspection of the T18 battery charger. Remove any covers or shields to gain access. Inspect the assembly for cracks, dents, pinched, cut or frayed high-voltage DC 300V cables, low-voltage cables or other physical damage.
4. Vehicle OFF, perform a visual inspection of the following high voltage components listed. Remove any covers or shields to gain access. Inspect the assembly for cracks, dents, pinched, cut or frayed high-voltage DC 300V cables, low-voltage cables or other physical damage.
   - A4 hybrid/EV battery pack (exterior only -- includes tray and A28 hybrid/EV battery contactor assembly)
   - T18 battery charger (if not done in previous step).
   - G1 air conditioning compressor.
   - K10 coolant heater control module.
   - K1 14 V accessory power module.
   - T6 power inverter module.
   - T12 automatic transmission assembly.
   - The high-voltage DC 300 V cable between the A4 hybrid/EV battery pack and the T18 battery charger.
   - The high-voltage DC 300 V cable between the T6 power inverter module and the A4 hybrid/EV battery pack.
   - The high-voltage DC 300 V cable between the T6 power inverter module and the G1 air conditioning compressor.
   - The high-voltage DC 300 V cable between the T6 power inverter module and the K10 coolant heater control module.
   - The high-voltage DC 300 V cable between the T6 power inverter module and the K1 14 V accessory power module.
   - The high-voltage DC 300 V cable between the T6 power inverter module and the K107A drive motor 1 control module.
   - The high-voltage DC 300 V cable between the T6 power inverter module and the K107B drive motor 2 control module.
   - The high-voltage DC 300 V cable between the T6 power inverter module and the K6 transmission fluid pump control module-auxiliary.

   Perform the appropriate high-voltage disable procedure. Refer to High Voltage Disabling . Replace all components and cables identified as damaged. Continue to

next step after repairs.

5. Vehicle in Service Mode, verify that no DTCs are set.
   If any DTC is set, refer to Diagnostic Trouble Code (DTC) List - Vehicle .
6. With a scan tool clear the hybrid powertrain control module 2 Crash Event Detected disable condition only after all high-voltage components identified as damaged have been replaced. Refer to Clear Secured High-Voltage DTCs .
7. Perform the required body repairs as per the approved service procedures.

Air Bags Deployed Inspection

1. Perform the high-voltage disable procedure at the A4 hybrid/EV battery pack. Refer to High Voltage Disabling . If vehicle damage does not allow for access to the S15 hybrid/EV battery pack high-voltage manual disconnect lever, disconnect the 12V battery and remove the damaged portion of the vehicle until such time as the S15 hybrid/EV battery pack high-voltage manual disconnect lever can be removed and the High Voltage Disabling procedure can be completed. Remove the A4 hybrid/EV battery pack from the vehicle. Refer to Drive Motor Battery Replacement and Shipping Preparation .
2. Perform a visual inspection of the A4 hybrid/EV battery pack for cracks, dents or other physical external damage.
   If physical damage is observed, replace all components identified as damaged. Continue to next step after repairs.
3. Perform a visual inspection of the following high-voltage components listed. Remove any covers or shields to gain access. Inspect the assembly for cracks, dents, pinched, cut or frayed high-voltage DC 300V cables, low-voltage cables or other physical damage.
   - T18 battery charger.
   - G1 air conditioning compressor.
   - K10 coolant heater control module.
   - K1 14 V accessory power module.
   - T6 power inverter module.
   - T12 automatic transmission assembly.
   - The high-voltage DC 300 V cable between the A4 hybrid/EV battery pack and the T18 battery charger.
   - The high-voltage DC 300 V cable between the T6 power inverter module and the A4 hybrid/EV battery pack.
   - The high-voltage DC 300 V cable between the T6 power inverter module and the G1 air conditioning compressor.
   - The high-voltage DC 300 V cable between the T6 power inverter module and the K10 coolant heater control module.
   - The high-voltage DC 300 V cable between the T6 power inverter module and the K1 14 V accessory power module.
   - The high-voltage DC 300 V cable between the T6 power inverter module and the K107A drive motor 1 control module.
   - The high-voltage DC 300 V cable between the T6 power inverter module and the K107B drive motor 2 control module.
   - The high-voltage DC 300 V cable between the T6 power inverter module and the K6 transmission fluid pump control module-auxiliary.

   Replace all components and cables identified as damaged. Continue to next step after repairs.

Note: Ignore DTCs P0A0C, P0A0D, P0D17 and P0D18. These will set with the S15 hybrid/EV battery pack high voltage manual disconnect lever removed, the 12 V battery connected and the Vehicle in Service Mode.

4. Install the EL-50211 low-voltage jumper harness extension.
5. Connect the 12 V battery.
6. Vehicle in Service Mode, verify that no DTCs are set.
   If any DTC is set, refer to Diagnostic Trouble Code (DTC) List - Vehicle .
7. Perform the required body repairs as per the approved service procedures.

&#169© Copyright Chevrolet. All rights reserved

Battery Charger and 14 V Power Module Maxi 20 A Fuse Replacement

Removal Procedure

Danger: Always perform the High-Voltage Disabling procedure prior to servicing any High Voltage component or connection. Personal Protection Equipment (PPE) and proper procedures must be followed.

The High-Voltage Disabling procedure will perform the following tasks:

- Identify how to disable high voltage.
- Identify how to test for the presence of high voltage.
- Identify conditions under which high voltage is always present and personal protection equipment (PPE) and proper procedures must be followed.

Before working on any high-voltage system, be sure to wear the following Personal Protection Equipment:

- Safety goggles with appropriate side shields when within 15 metres (50 feet) of the vehicle, either indoors or outdoors.
- Certified and up-to-date Class "0" Insulation gloves rated at 1000 V with leather protectors.
  - Visually and functionally inspect the gloves before use.
  - Wear the Insulation gloves with leather protectors at all times when working with the high-voltage battery assembly, whether the system is energised or not.

Failure to follow the procedures exactly as written may result in serious injury or death.

Danger: The Volt Battery Pack will utilise an exchange program. Please consult the most recent revision of bulletin/PI #PIP4841, available in Service Information (SI), for a list of approved Volt Battery Pack service procedures. Components that may be removed and serviced without exchanging the complete battery pack are identified in the bulletin/PI. Please contact the GM Technical Assistance Centre (1-877-446-8227) if you have any questions.

1. Disable the high-voltage system. Refer to High Voltage Disabling .

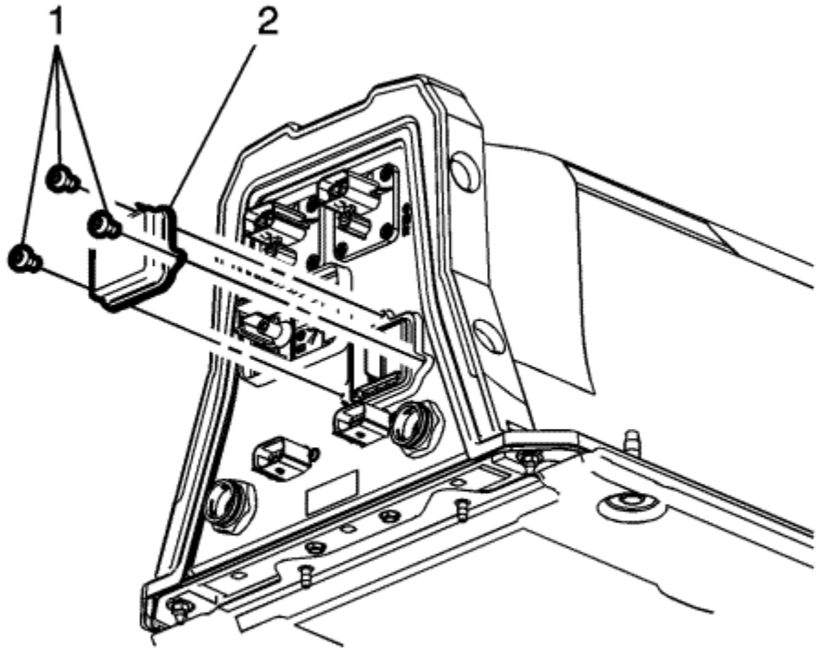

2. Remove the multi-use relay and fuse cover screws (1) from the drive motor battery.
3. Remove the multi-use relay and fuse cover (2).

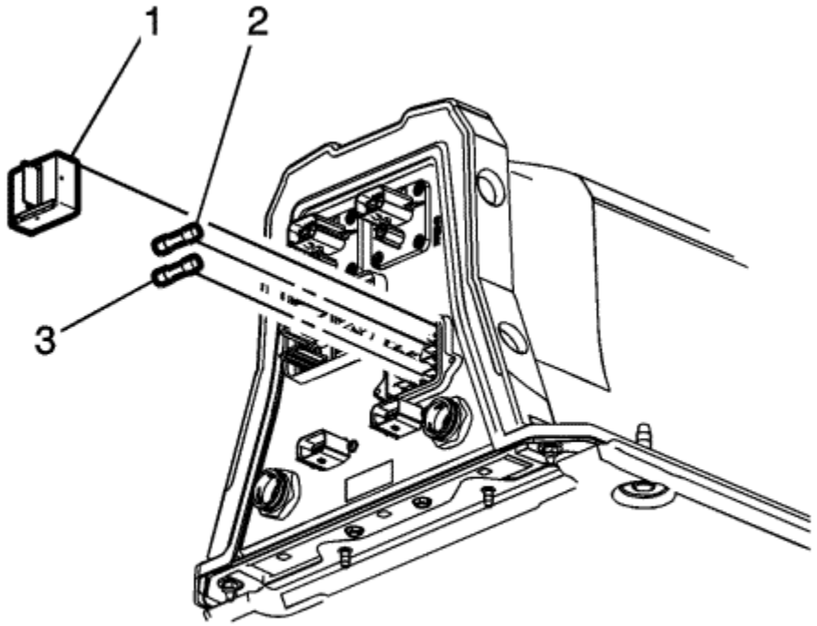

4. Remove the battery protector (Insulator) (1).
5. Remove the 14 V power module 20 amp maxi-fuse (2).
6. Remove the battery charger 20 amp maxi-fuse (3).

Installation Procedure

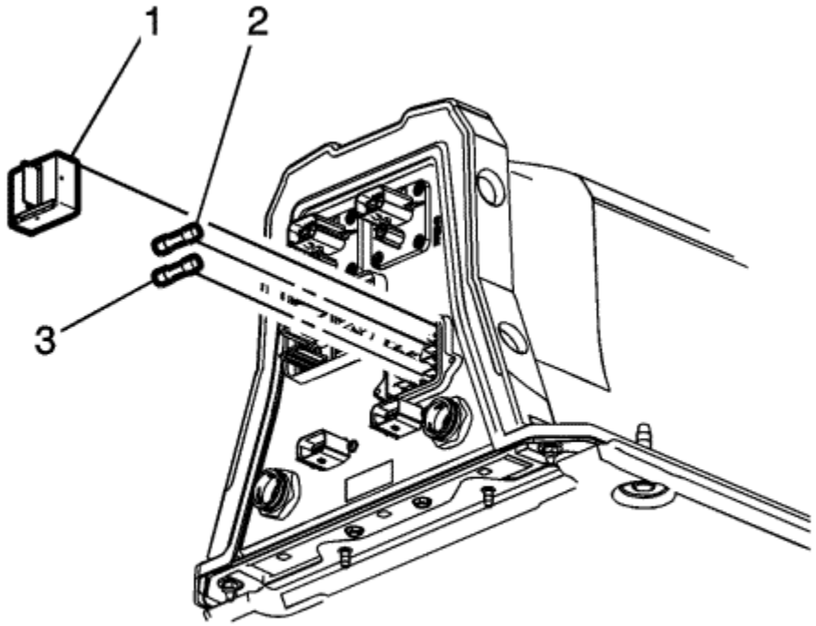

1. Install the 14 V power module 20 amp maxi-fuse (2).
2. Install the battery charger 20 amp maxi-fuse (3).
3. Install the battery protector (Insulator) (1).

Caution: Refer to Fastener Caution in the Preface section.

4. Install the multi-use relay and fuse cover (2) with screws (1). Tighten to **6 N·m (53 lb in)**.

&#169© Copyright Chevrolet. All rights reserved

300 Volt Battery Positive and Negative Cable Replacement - Drive Motor Battery-to-Inverter

Removal Procedure

Danger: Always perform the High-Voltage Disabling procedure prior to servicing any High Voltage component or connection. Personal Protection Equipment (PPE) and proper procedures must be followed.

The High-Voltage Disabling procedure will perform the following tasks:

- Identify how to disable high voltage.
- Identify how to test for the presence of high voltage.
- Identify conditions under which high voltage is always present and personal protection equipment (PPE) and proper procedures must be followed.

Before working on any high-voltage system, be sure to wear the following Personal Protection Equipment:

- Safety goggles with appropriate side shields when within 15 metres (50 feet) of the vehicle, either indoors or outdoors.
- Certified and up-to-date Class "0" Insulation gloves rated at 1000 V with leather protectors.
  - Visually and functionally inspect the gloves before use.
  - Wear the Insulation gloves with leather protectors at all times when working with the high-voltage battery assembly, whether the system is energised or not.

Failure to follow the procedures exactly as written may result in serious injury or death.

Danger: The Volt Battery Pack will utilise an exchange program. Please consult the most recent revision of bulletin/PI #PIP4841, available in Service Information (SI), for a list of approved Volt Battery Pack service procedures. Components that may be removed and serviced without exchanging the complete battery pack are identified in the bulletin/PI. Please contact the GM Technical Assistance Centre (1-877-446-8227) if you have any questions.

1. Disable the high-voltage system. Refer to High Voltage Disabling .
2. Remove the exhaust pipe front heat shield. Refer to Exhaust Pipe Heat Shield Replacement : Rear → Center → Front .

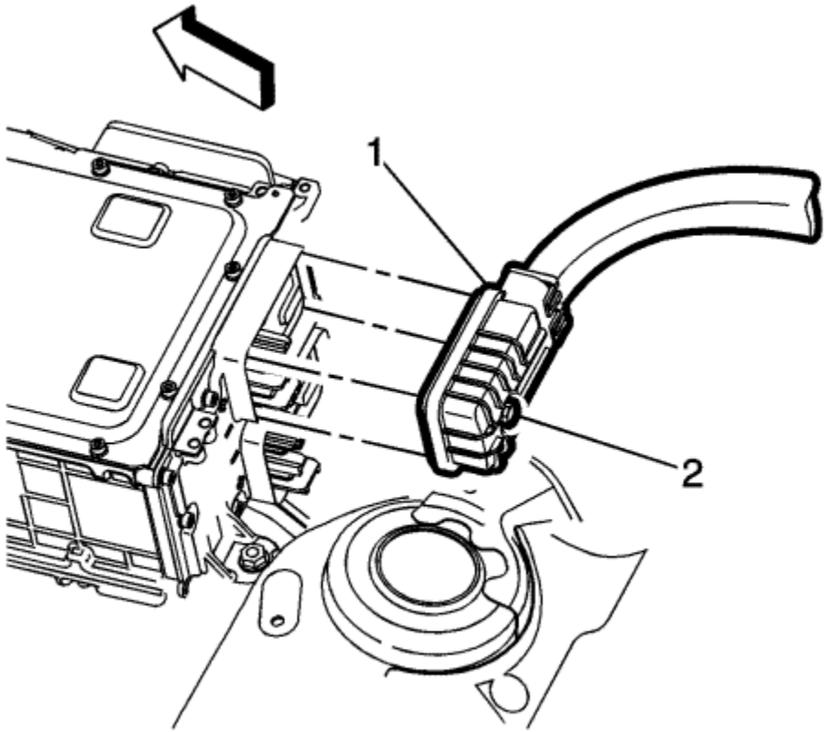

3. Remove the bolt (2) holding the 300 V battery positive and negative cable connector (1), to the drive motor generator power inverter module.

   Note: Replace the 300 V battery positive and negative connector seal.

4. Drain the drive motor battery cooling system. Refer to Drive Motor Battery Cooling System Draining and Filling .

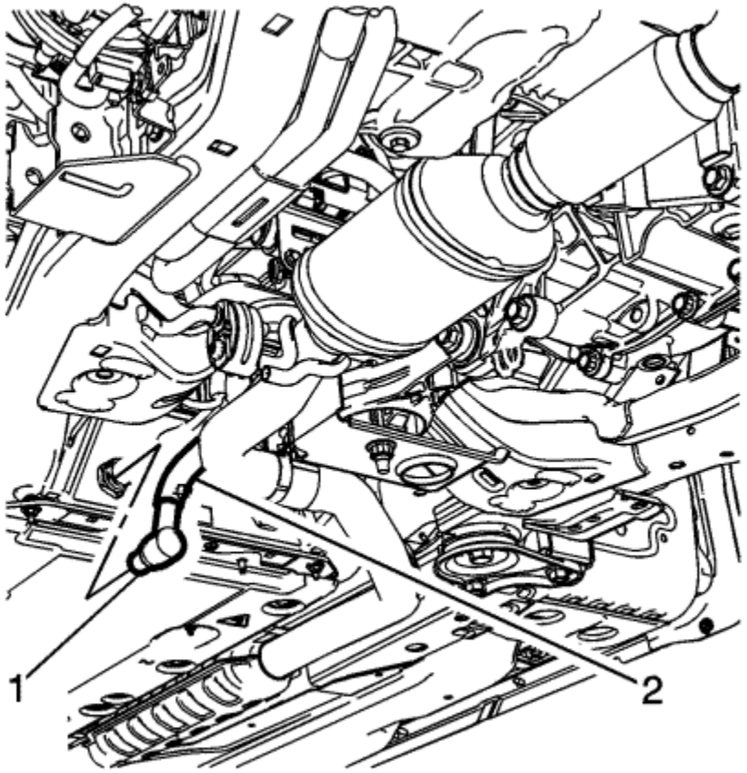

5. Remove the drive motor battery coolant cooler inlet hose fitting (1) and set aside the drive motor battery coolant cooler hose (2).

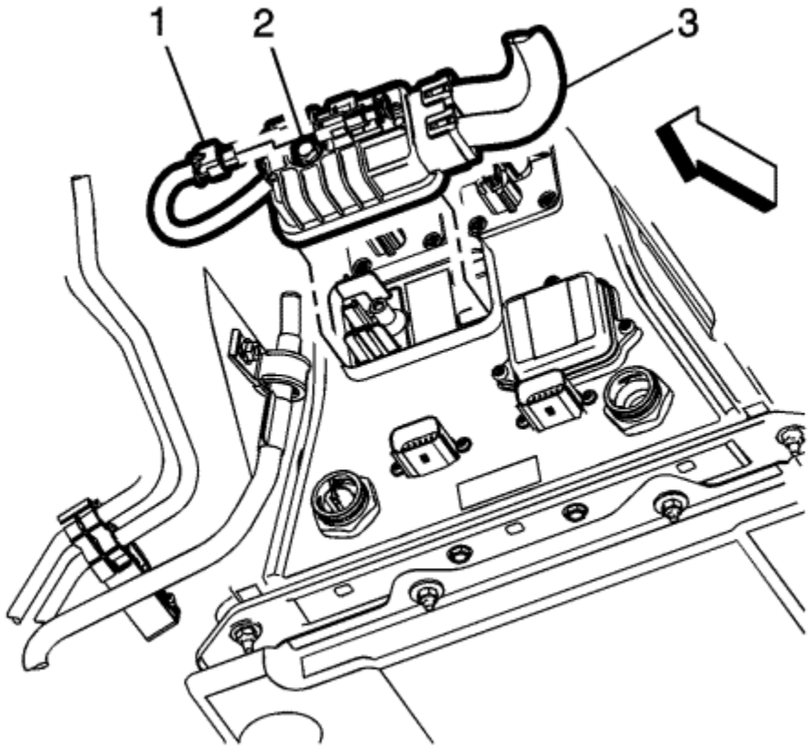

6. Remove the high-voltage interlock loop connector (1) and the bolt (2) holding the connector (3) to the drive motor battery.

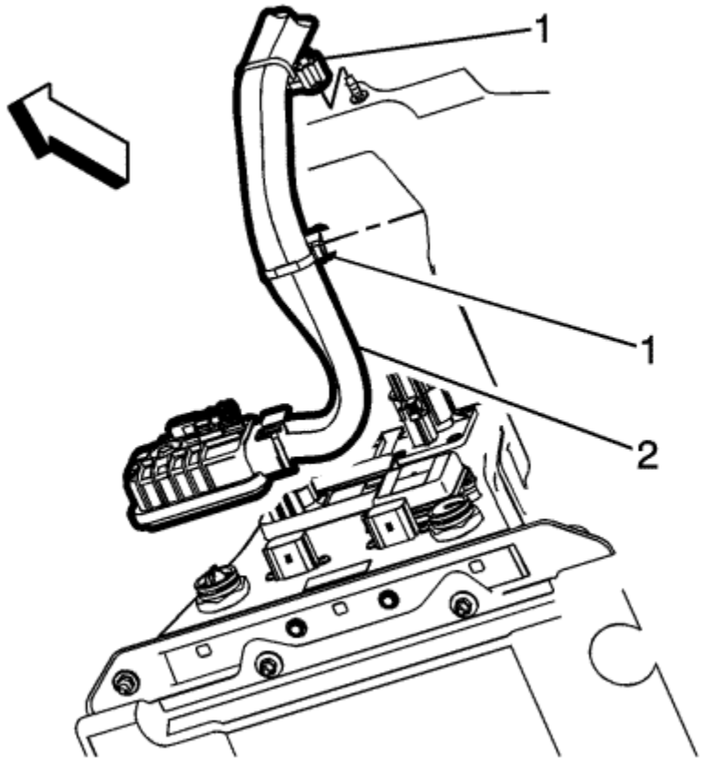

7. Disconnect the 300 V battery positive and negative cable retainers (1) from the studs.

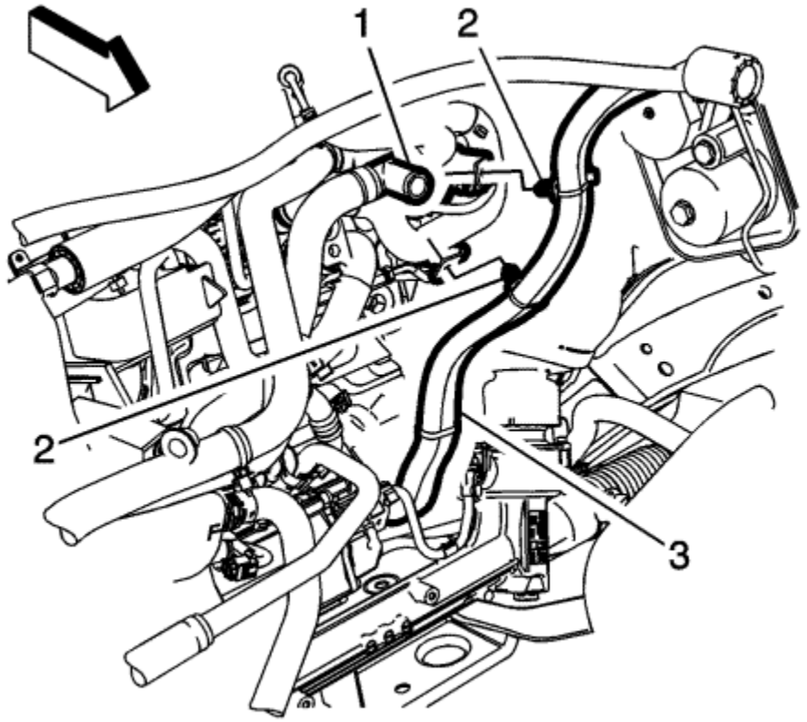

8. Remove the 300 V battery positive and negative cable retainers (2) from the heater coolant shut-off valve bracket (1).

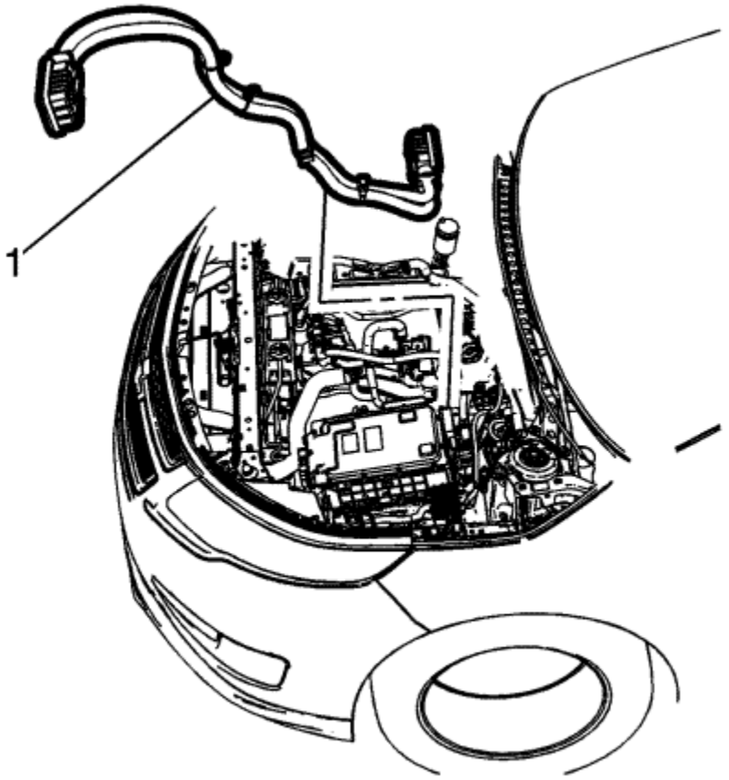

9. Remove the 300 V battery positive and negative cable (1) from the vehicle.

Installation Procedure

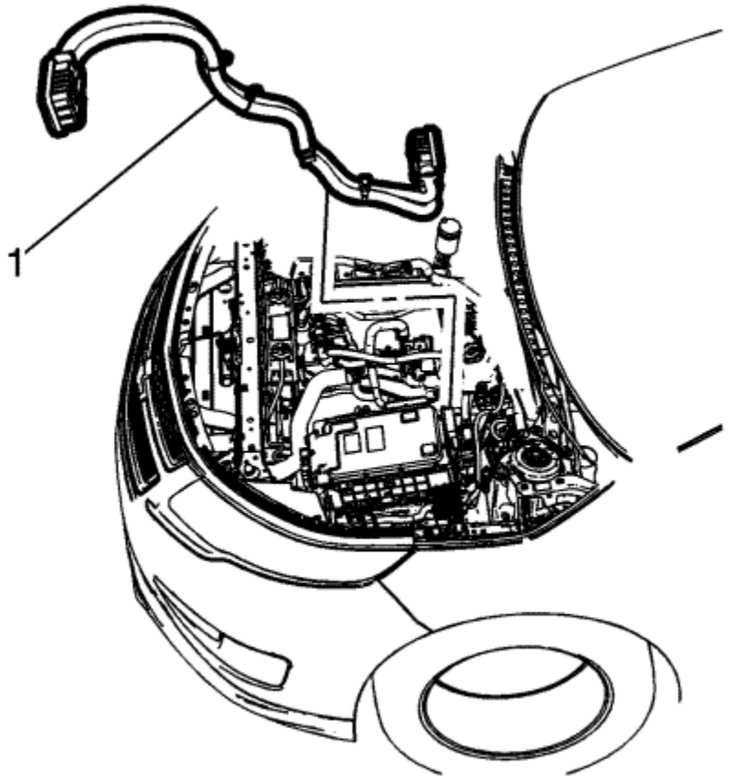

1. Position the 300 V battery positive and negative cable (1) in the engine compartment.

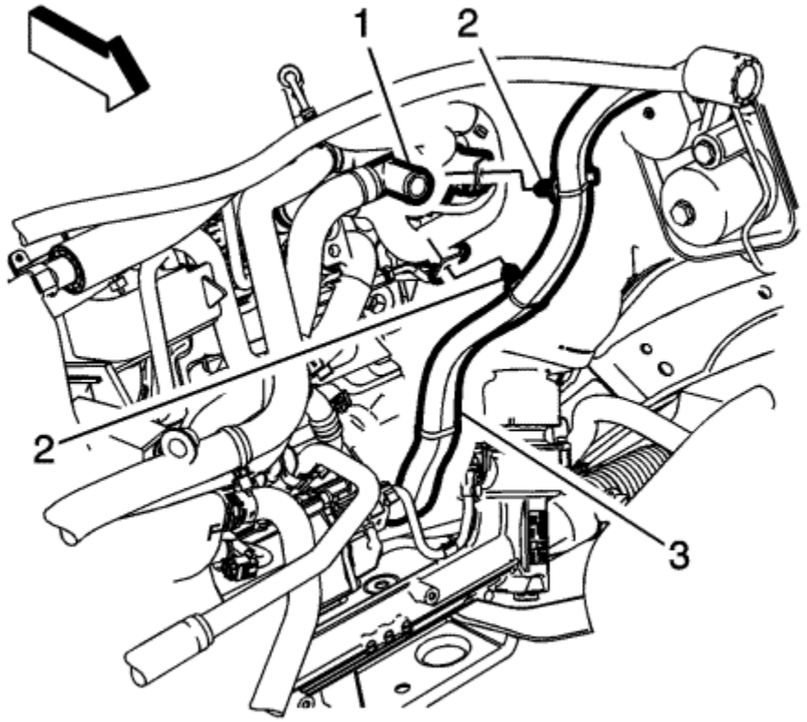

2. Connect the 300 V battery positive and negative cable retainers (2) to the heater coolant shut-off valve bracket (1).

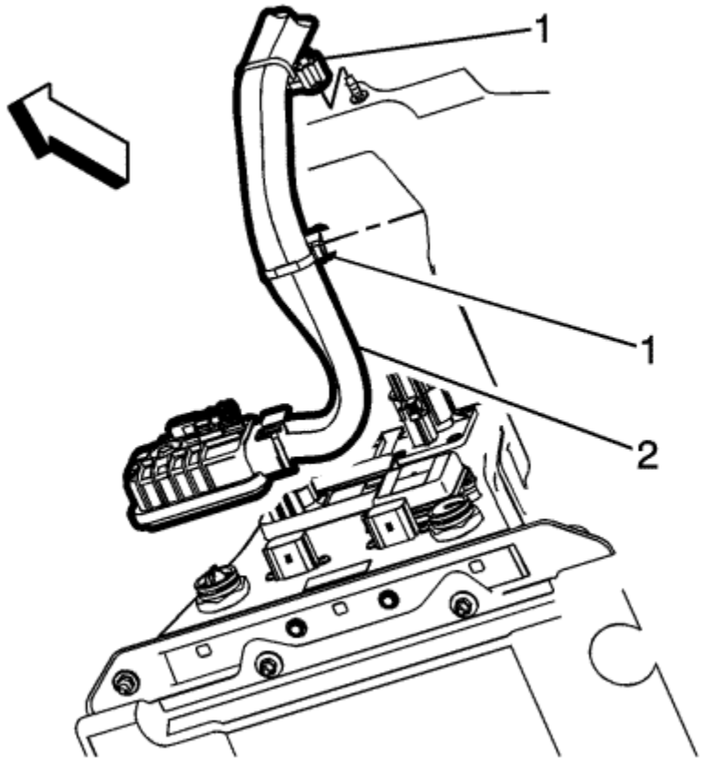

3. Install the 300 V battery positive and negative cable retainers (1) to the tunnel studs.

   Caution: Refer to Fastener Caution in the Preface section.

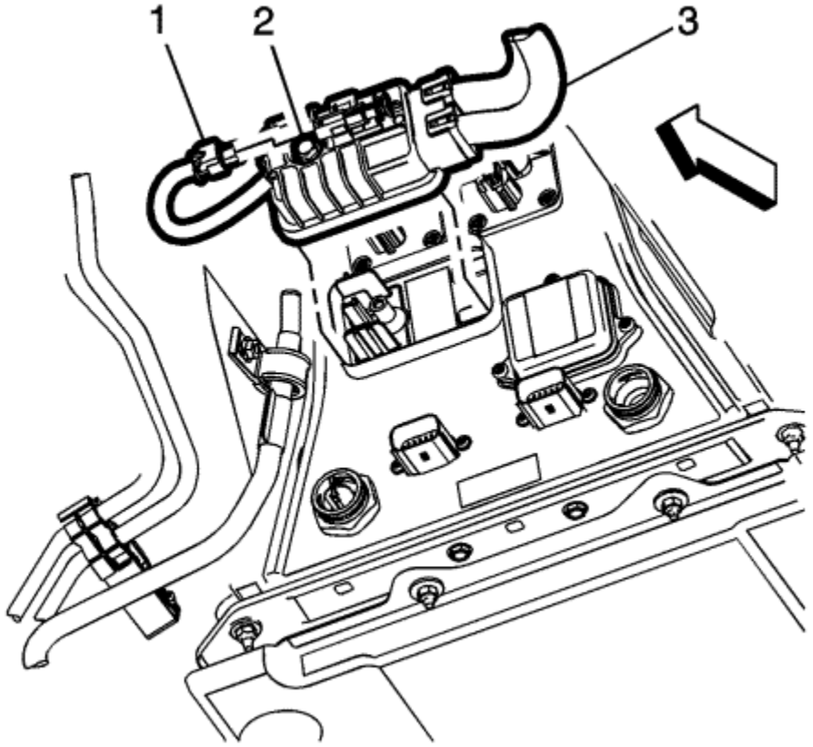

4. Install the 300 V battery positive and negative connector bolt (2) and tighten to **8 N·m (71 lb in)**.
5. Connect the high voltage interlock loop connector (1) to the 300 V battery positive and negative cable connector (3).

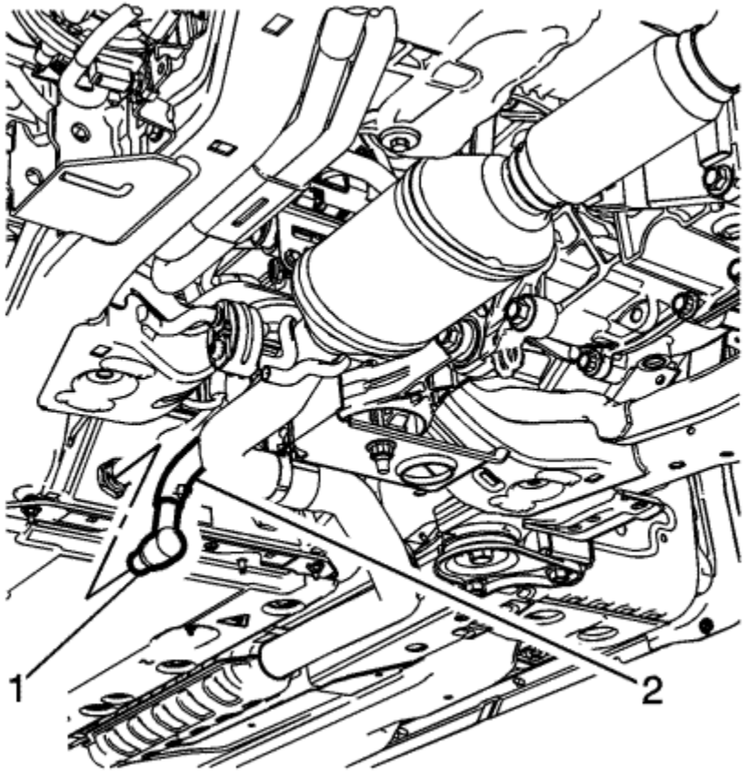

6. Install the drive motor battery coolant cooler inlet hose fitting (1).
7. Fill the drive motor battery cooling system. Refer to Drive Motor Battery Cooling System Draining and Filling .
8. Enable the high-voltage system. Refer to High-Voltage Enabling .

© Copyright Chevrolet. All rights reserved

300 Volt Battery Positive and Negative Cable Replacement - Inverter-to-Compressor/Heater Module

Removal Procedure

Danger: Always perform the High-Voltage Disabling procedure prior to servicing any High Voltage component or connection. Personal Protection Equipment (PPE) and proper procedures must be followed.

The High-Voltage Disabling procedure will perform the following tasks:

- Identify how to disable high voltage.
- Identify how to test for the presence of high voltage.
- Identify conditions under which high voltage is always present and personal protection equipment (PPE) and proper procedures must be followed.

Before working on any high-voltage system, be sure to wear the following Personal Protection Equipment:

- Safety goggles with appropriate side shields when within 15 metres (50 feet) of the vehicle, either indoors or outdoors.
- Certified and up-to-date Class "0" Insulation gloves rated at 1000 V with leather protectors.
  - Visually and functionally inspect the gloves before use.
  - Wear the Insulation gloves with leather protectors at all times when working with the high-voltage battery assembly, whether the system is energised or not.

Failure to follow the procedures exactly as written may result in serious injury or death.

Danger: The Volt Battery Pack will utilise an exchange program. Please consult the most recent revision of bulletin/PI #PIP4841, available in Service Information (SI), for a list of approved Volt Battery Pack service procedures. Components that may be removed and serviced without exchanging the complete battery pack are identified in the bulletin/PI. Please contact the GM Technical Assistance Centre (1-877-446-8227) if you have any questions.

1. Disable the high-voltage system. Refer to High Voltage Disabling .
2. Remove the air cleaner resonator outlet duct. Refer to Air Cleaner Resonator Outlet Duct Replacement .
3. Remove the throttle body. Refer to Throttle Body Assembly Replacement .

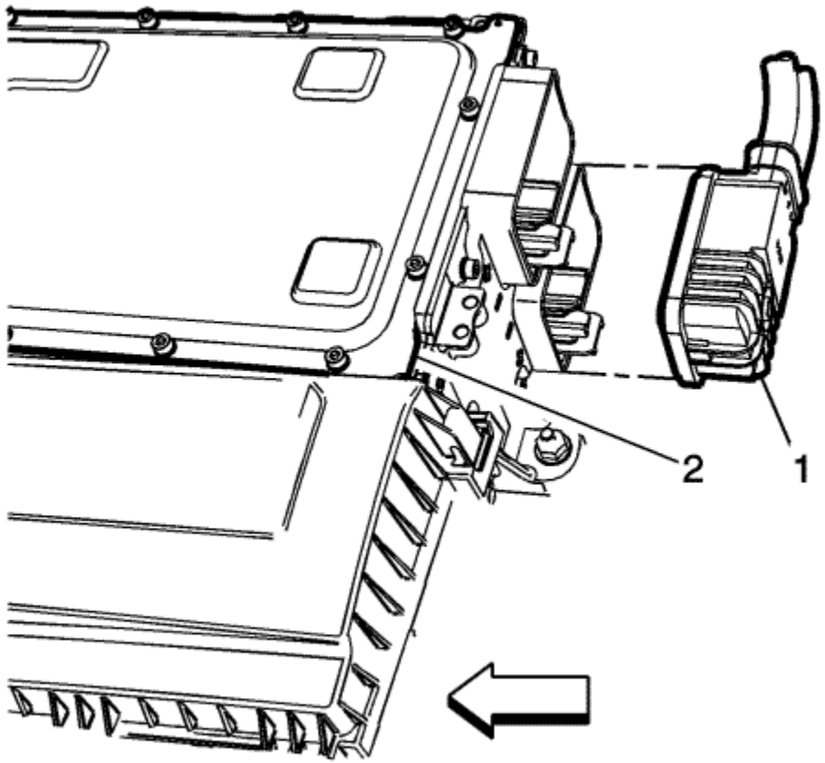

4. Remove the inverter-to-compressor/heater module cable (1) from the power inverter module (2).

   Note: Replace the 300 V battery positive and negative connector seal.

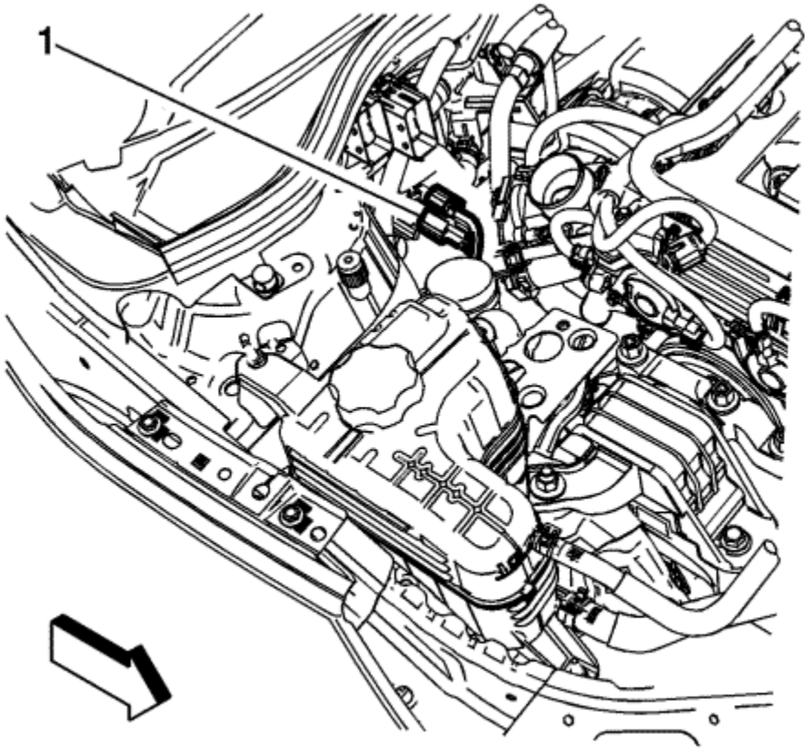

5. Locate the connectors (1) to the heater coolant heater module.

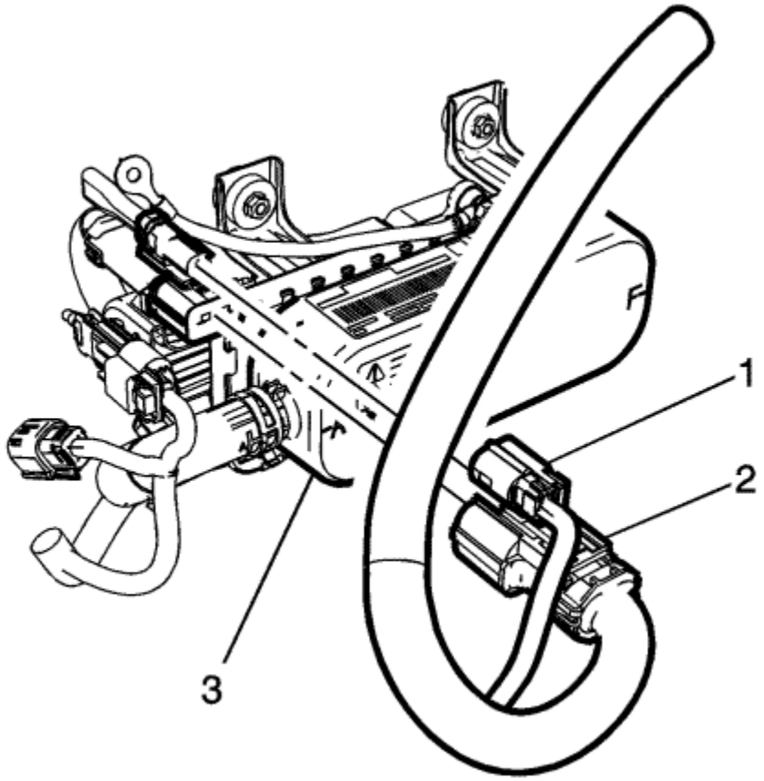

6. Detach the high-voltage inter-lock loop connector (1) and the 300 V battery positive and negative cable (2), from the heater coolant heater module (3).

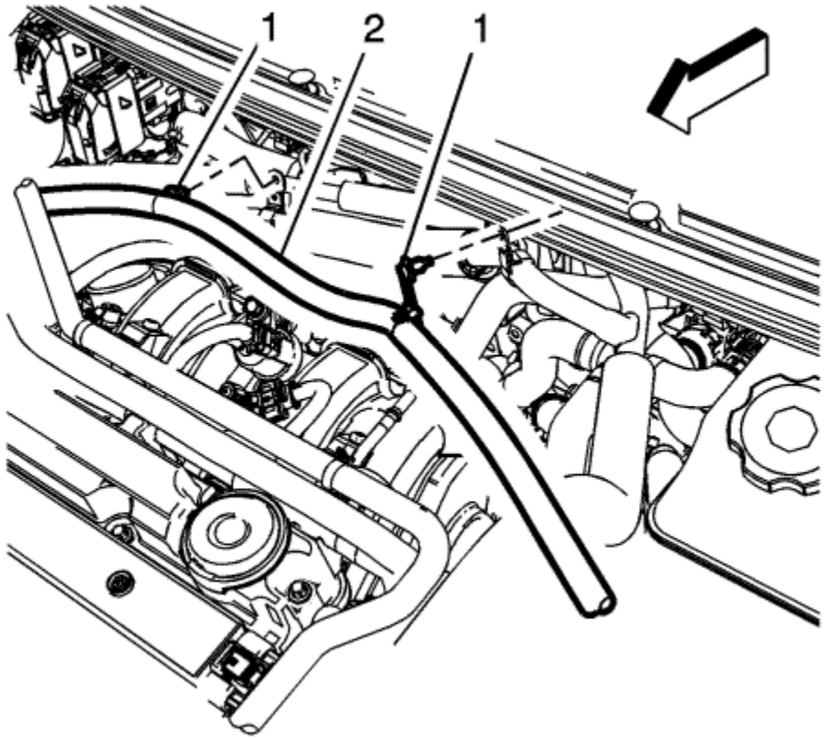

7. Disconnect the 300 V battery positive and negative cable retainers (1) from the A/C compressor hose.

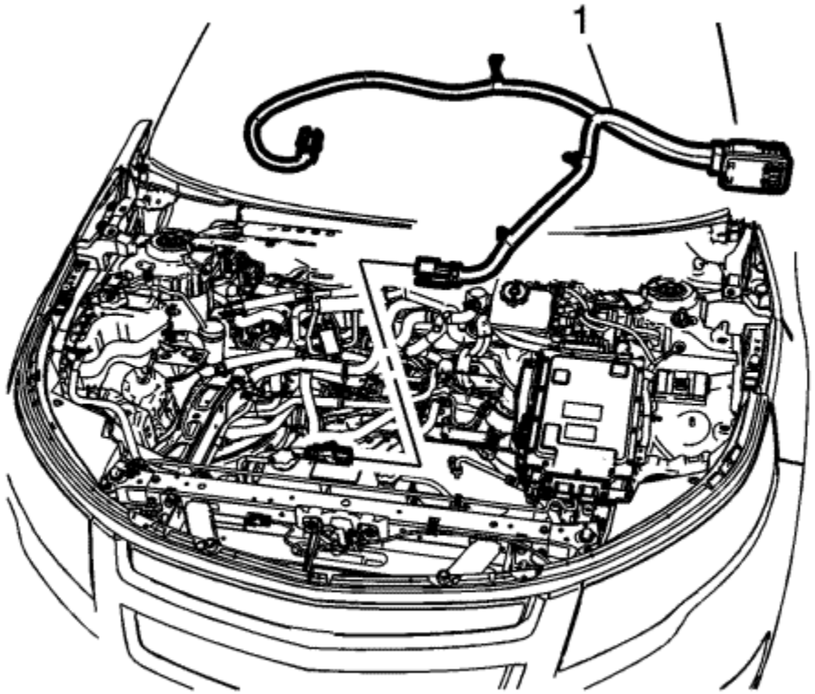

8. Remove the 300 V battery positive and negative cable (1) from the vehicle.

Installation Procedure

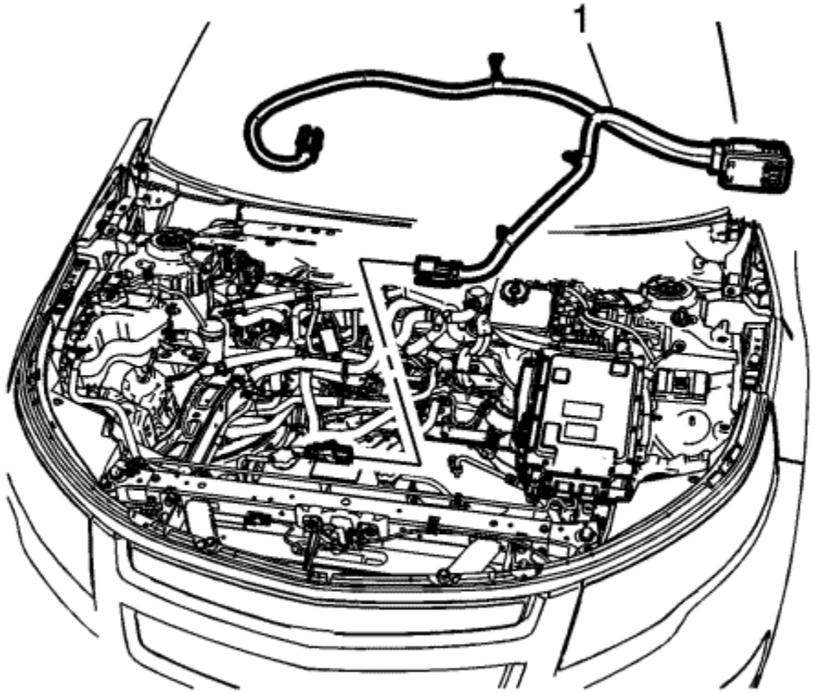

1. Position the 300 V battery positive and negative cable (1) in the engine compartment.

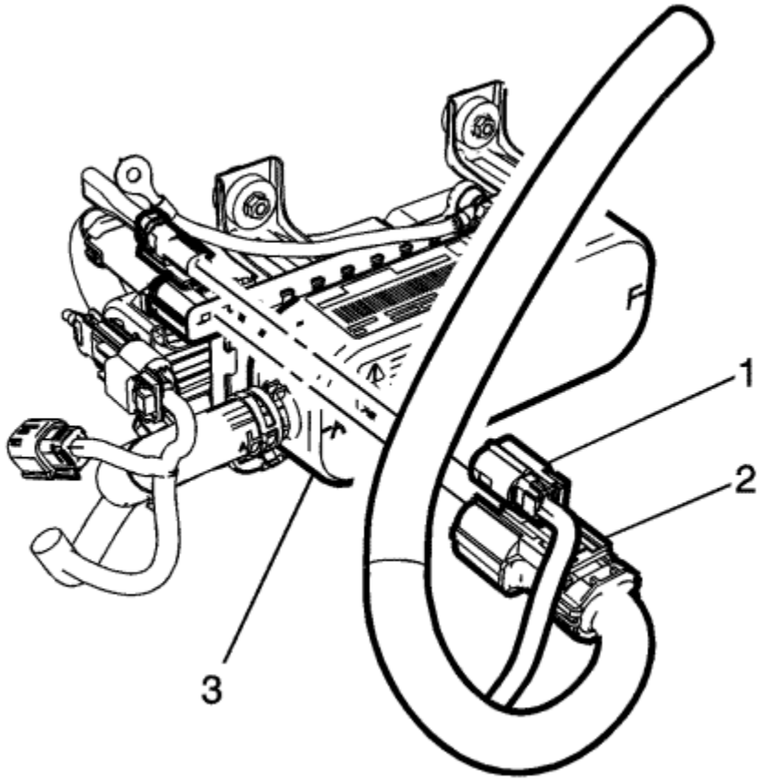

2. Connect the 300 V battery positive and negative cable connector (2) to the heater coolant heater module (3).
3. Connect the high-voltage inter-lock loop connector (1) to the heater coolant heater module (3).

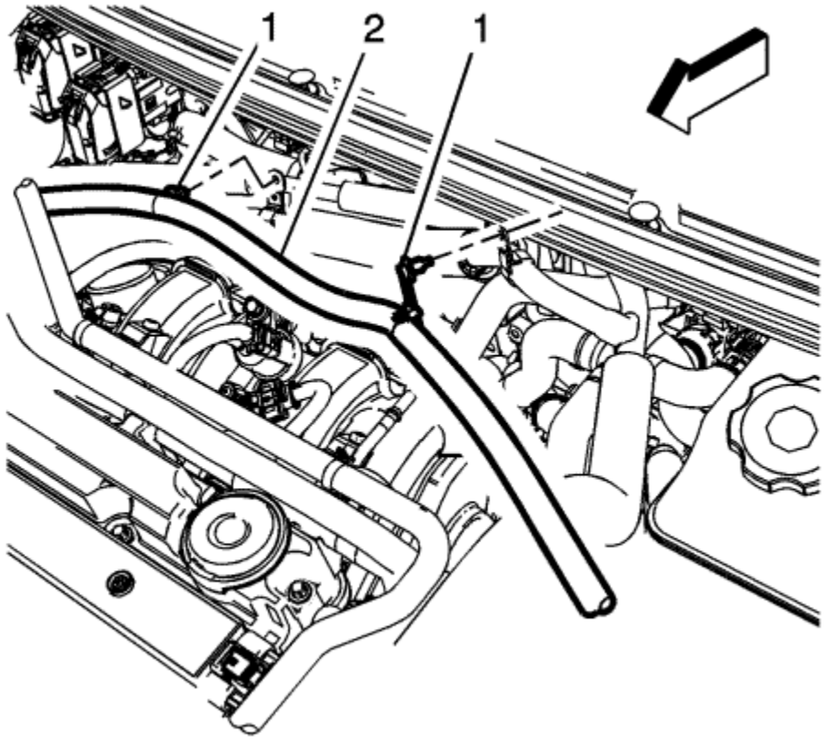

4. Install the 300 V battery positive and negative cable retainers (1) to the A/C compressor hose.

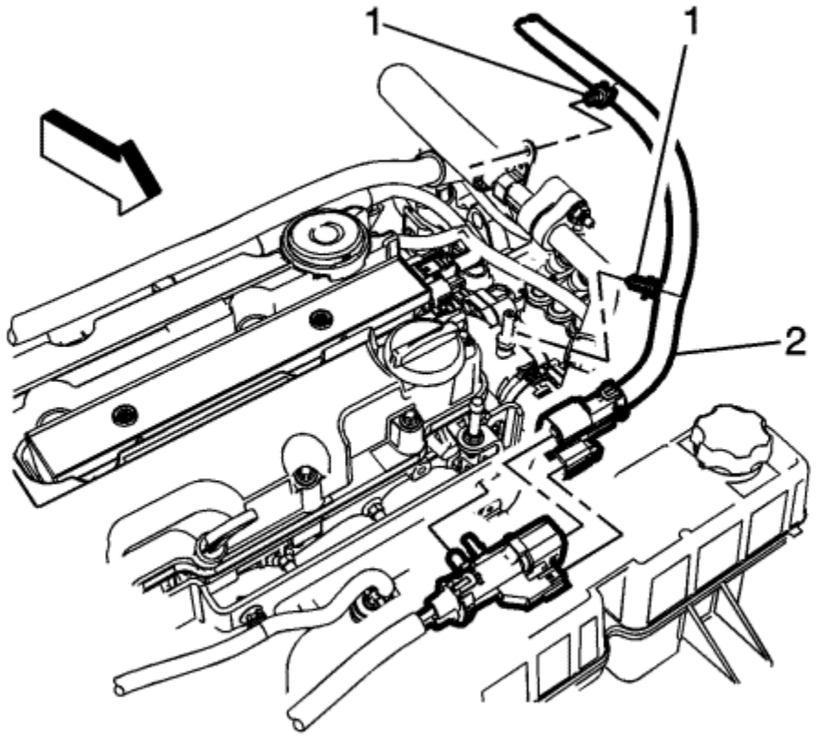

5. Install the 300 V battery positive and negative connector (2) to the A/C and drive motor battery cooling compressor.
6. Connect the 300 V battery positive and negative cable retainers (1) to the A/C compressor hose.

Caution: Refer to Fastener Caution in the Preface section.

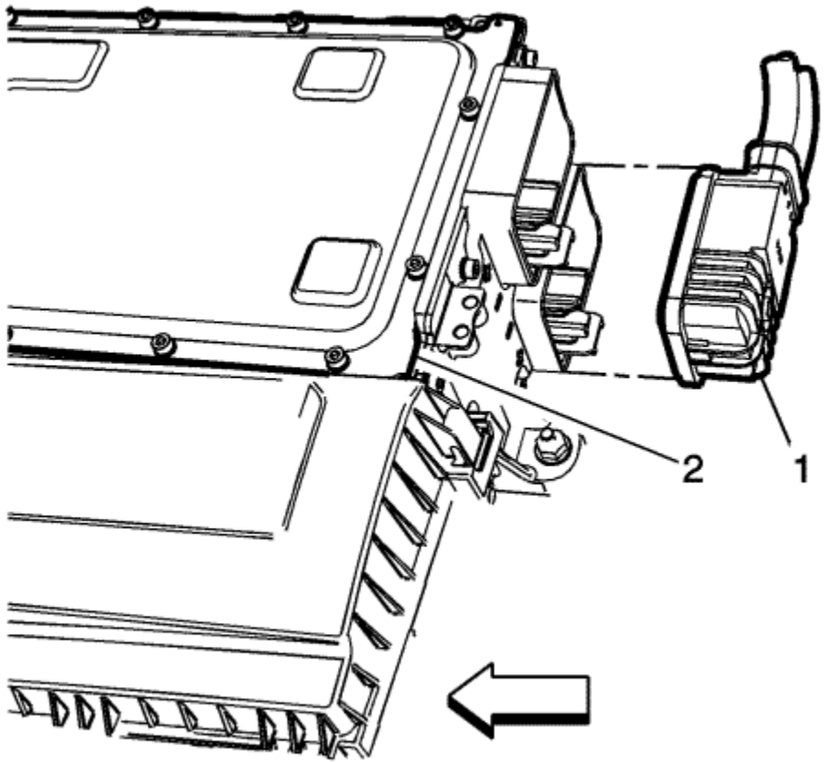

7. Connect the 300 V battery positive and negative cable connector (1) to the drive motor generator power inverter module. Tighten to **8 N·m (71 lb in)**.
8. Install the throttle body. Refer to Throttle Body Assembly Replacement .
9. Install the air cleaner resonator outlet duct. Refer to Air Cleaner Resonator Outlet Duct Replacement .
10. Enable the high-voltage system. Refer to High-Voltage Enabling .

© Copyright Chevrolet. All rights reserved

300 Volt Battery Positive and Negative Cable Replacement - Drive Motor Battery-to-Charger

Removal Procedure

Danger: Always perform the High-Voltage Disabling procedure prior to servicing any High Voltage component or connection. Personal Protection Equipment (PPE) and proper procedures must be followed.

The High-Voltage Disabling procedure will perform the following tasks:

- Identify how to disable high voltage.
- Identify how to test for the presence of high voltage.
- Identify conditions under which high voltage is always present and personal protection equipment (PPE) and proper procedures must be followed.

Before working on any high-voltage system, be sure to wear the following Personal Protection Equipment:

- Safety goggles with appropriate side shields when within 15 metres (50 feet) of the vehicle, either indoors or outdoors.
- Certified and up-to-date Class "0" Insulation gloves rated at 1000 V with leather protectors.
  - Visually and functionally inspect the gloves before use.
  - Wear the Insulation gloves with leather protectors at all times when working with the high-voltage battery assembly, whether the system is energised or not.

Failure to follow the procedures exactly as written may result in serious injury or death.

Danger: The Volt Battery Pack will utilise an exchange program. Please consult the most recent revision of bulletin/PI #PIP4841, available in Service Information (SI), for a list of approved Volt Battery Pack service procedures. Components that may be removed and serviced without exchanging the complete battery pack are identified in the bulletin/PI. Please contact the GM Technical Assistance Centre (1-877-446-8227) if you have any questions.

1. Disable the high-voltage system. Refer to High Voltage Disabling .
2. Remove the drivetrain and front suspension frame. Refer to Drivetrain and Front Suspension Frame Replacement .
3. Remove the drive motor battery coolant cooler inlet hose asembly. Refer to Drive Motor Battery Coolant Cooler Inlet Hose Assembly Replacement .

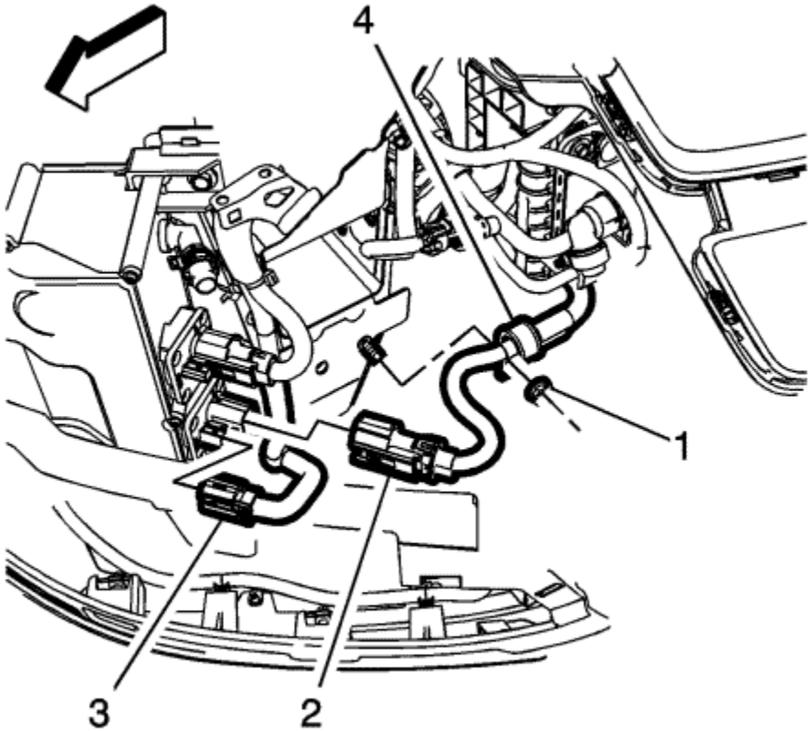

4. Disconnect the high-voltage inter-lock loop connector (3) from the drive motor battery charger.
5. Remove the 300 V battery positive/negative cable retaining nut (1) and the 300V battery positive/negative connector (2).

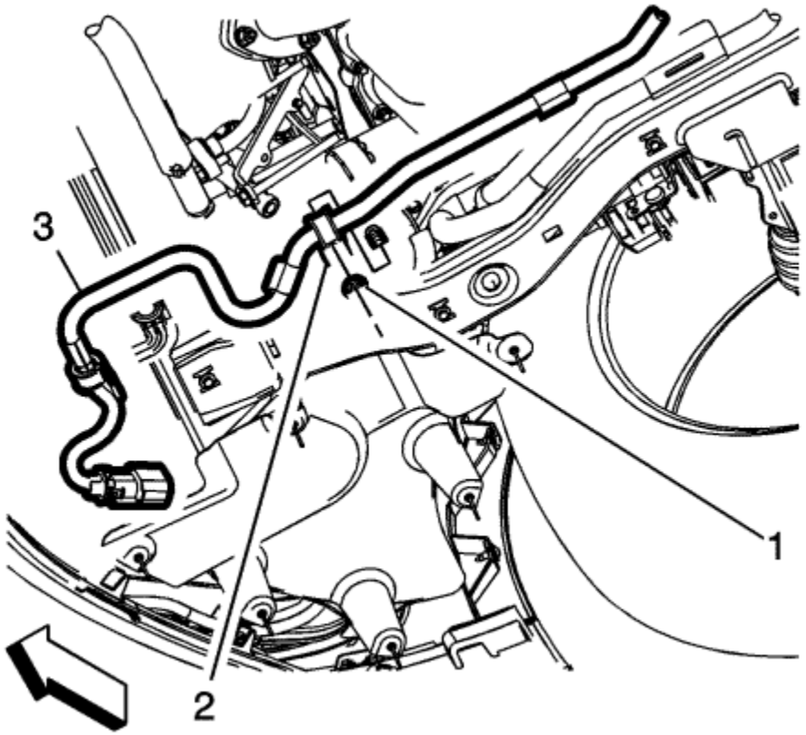

6. Remove the 300 V battery positive/negative cable retainer nut (1) from the underbody stud.

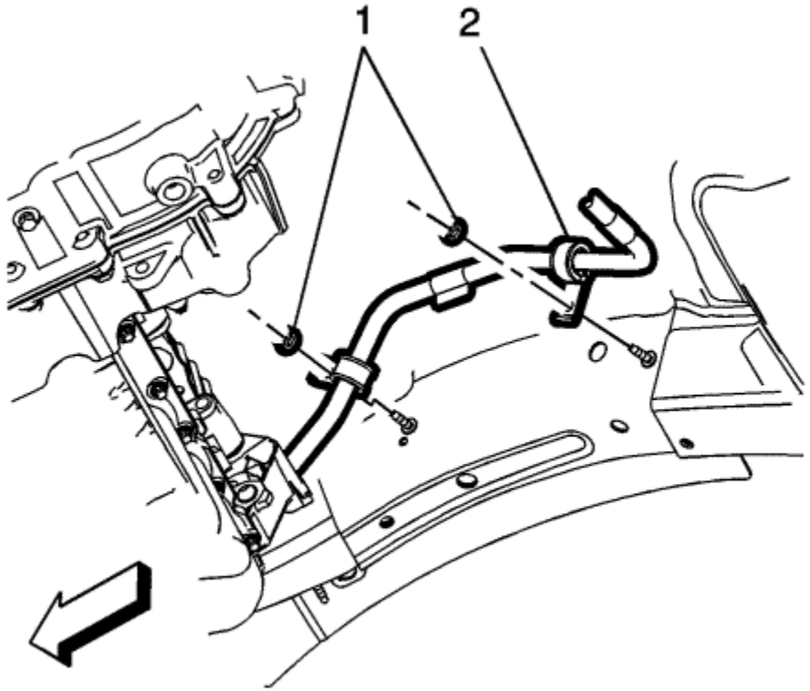

7. Remove the 300 V battery positive/negative cable retainer nuts (1) from the chassis frame.

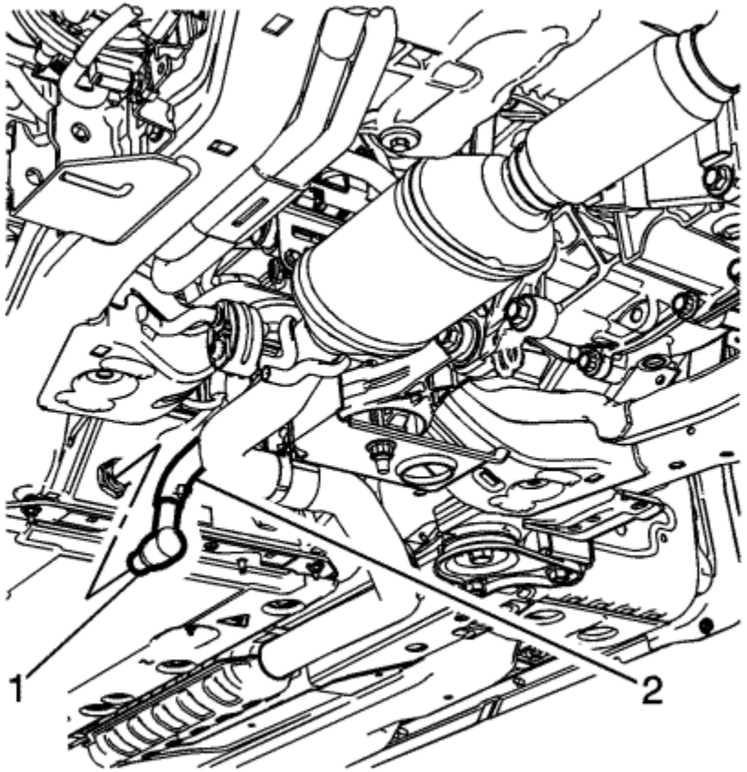

8. Remove the drive motor battery coolant cooler inlet hose fitting (1) and set aside the drive motor battery coolant cooler hose (2).
9. Remove the drive motor battery coolant outlet hose, if necessary. Refer to Drive Motor Battery Coolant Outlet Hose Replacement .

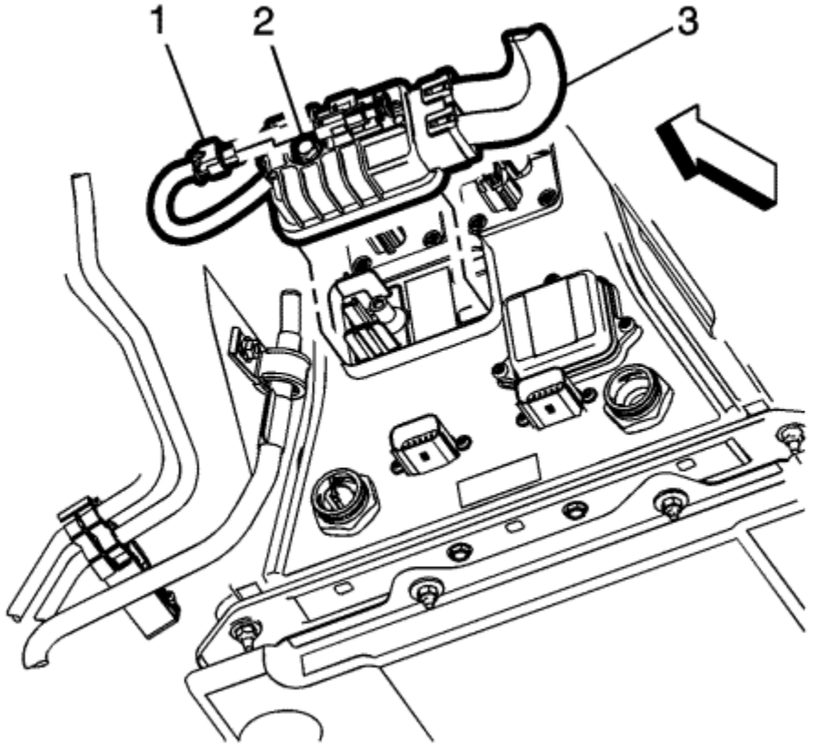

10. Remove the high-voltage inter-lock loop connector (1).
11. Remove the bolt (2) and set aside the connector (3).

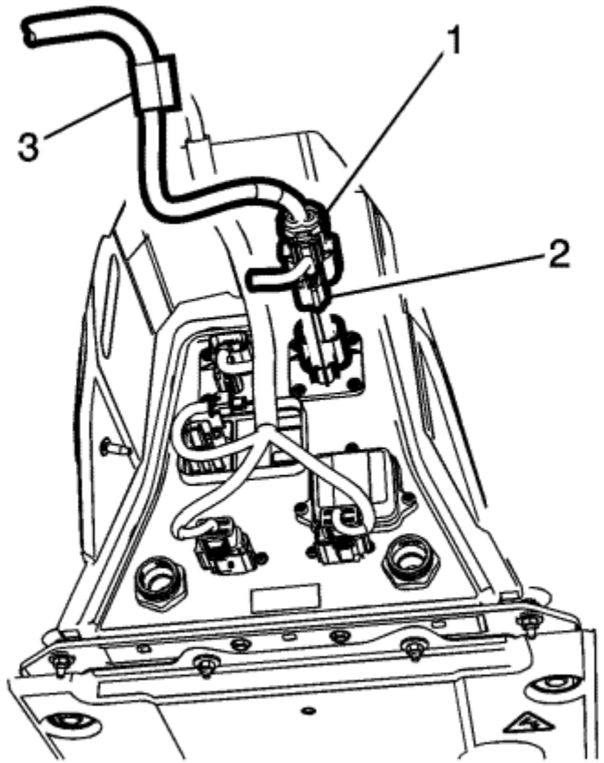

12. Remove the high-voltage inter-lock loop connector (2) and the 300 V battery positive/negative connector (1), from the drive motor battery.
13. Remove the 300 V battery positive/negative cable from the vehicle.

Installation Procedure

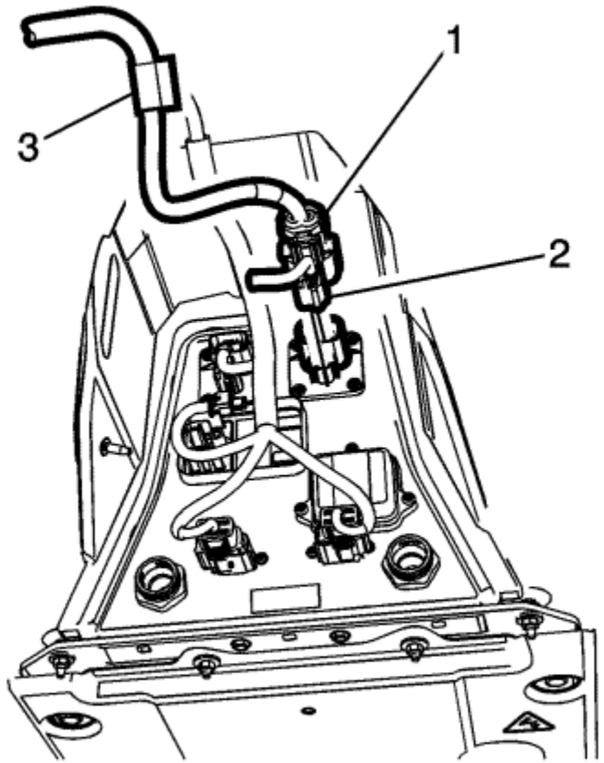

1. Connect the 300 V battery positive/negative cable connector (1) and the high-voltage inter-lock loop connector (2), to the drive motor battery.
2. Install the drive motor battery coolant outlet hose, if necessary. Refer to Drive Motor Battery Coolant Outlet Hose Replacement .

Caution: Refer to Fastener Caution in the Preface section.

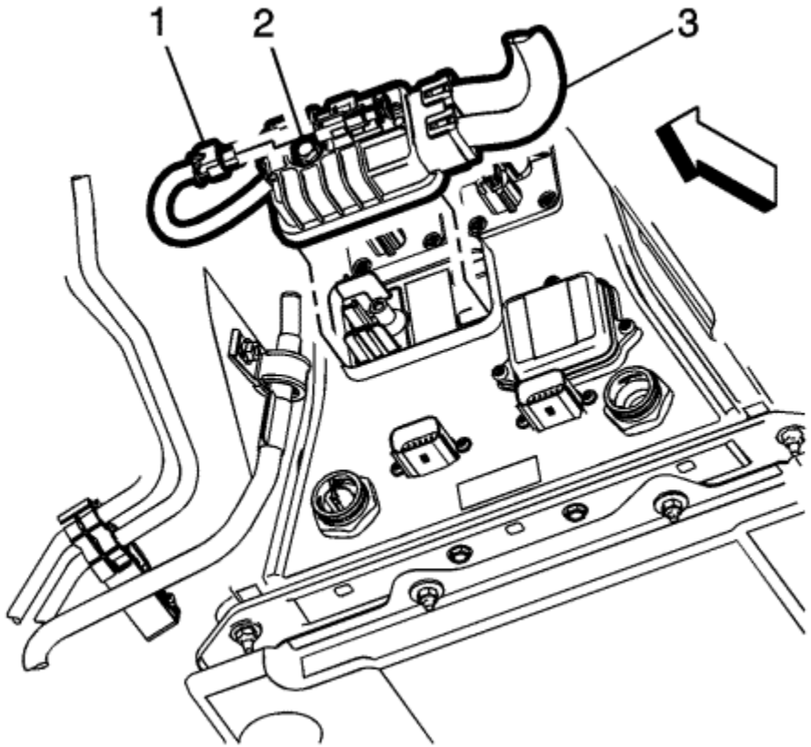

3. Connect the high-voltage connector (3) and tighten bolt (2) to **8 N·m (71 lb in)**.

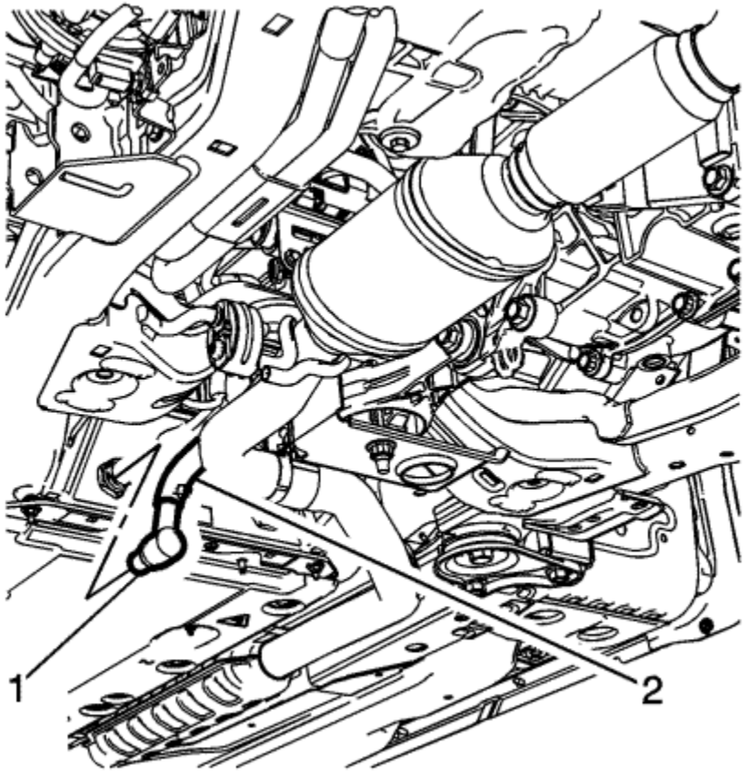

4. Install the drive motor battery coolant cooler inlet hose fitting (1).

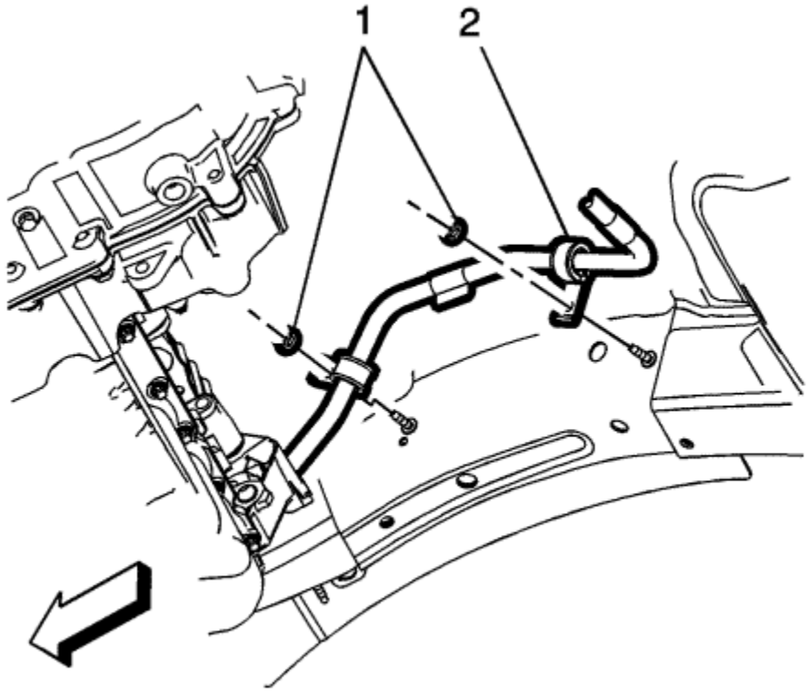

5. Install the 300 V battery positive/negative retainers (2) and nuts (1) to the chassis frame studs and tighten to **8 N·m (71 lb in)**.

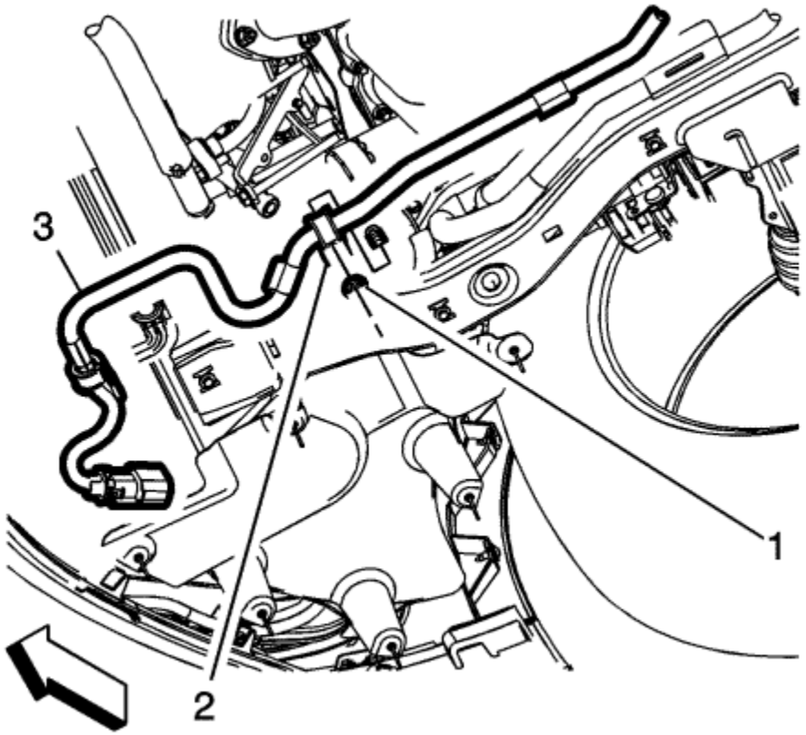

6. Connect the 300 V battery positive/negative cable retainer (2) and nut (1), to the panel stud, and tighten to **8 N·m (71 lb in)**.

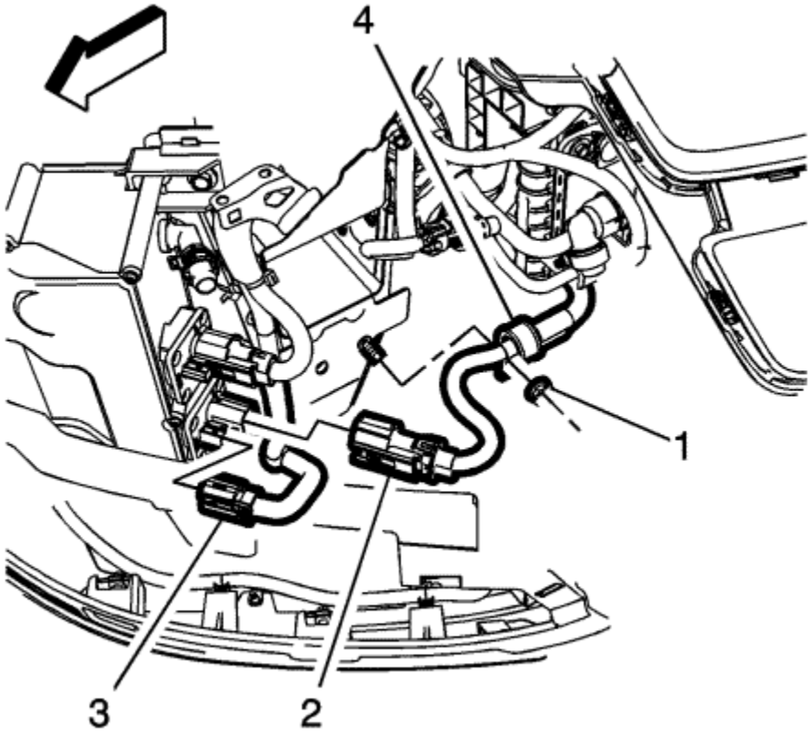

7. Install the 300 V battery positive/negative cable into the fuel line retainer with clip (1).

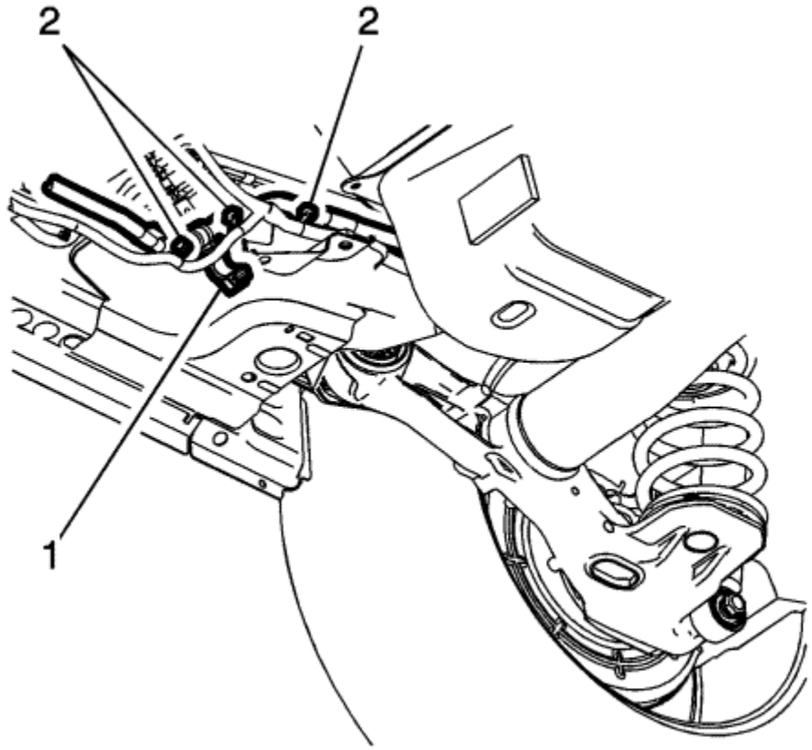

8. Connect the 300 V battery positive/negative cable connector (2) and the high-voltage inter-lock loop connector (3), to the drive motor battery charger.
9. Install the 300 V battery positive/negative cable retainer (4) and nut (1) and tighten to **8 N·m (71 lb in)**.
10. Install the 300 V battery positive/negative cable retainer to the stud and tighten nut (1) to **8 N·m (71 lb in)**.
11. Install the drive motor battery coolant cooler inlet hose asembly. Refer to Drive Motor Battery Coolant Cooler Inlet Hose Assembly Replacement .
12. Install the drivetrain and front suspension frame. Refer to Drivetrain and Front Suspension Frame Replacement .
13. Enable the high-voltage system. Refer to High-Voltage Enabling .

© Copyright Chevrolet. All rights reserved

300 Volt Battery Positive and Negative Cable Replacement - Drive Motor Battery-to-APM Module

Removal Procedure

Danger: Always perform the High-Voltage Disabling procedure prior to servicing any High Voltage component or connection. Personal Protection Equipment (PPE) and proper procedures must be followed.

The High-Voltage Disabling procedure will perform the following tasks:

- Identify how to disable high voltage.
- Identify how to test for the presence of high voltage.
- Identify conditions under which high voltage is always present and personal protection equipment (PPE) and proper procedures must be followed.

Before working on any high-voltage system, be sure to wear the following Personal Protection Equipment:

- Safety goggles with appropriate side shields when within 15 metres (50 feet) of the vehicle, either indoors or outdoors.
- Certified and up-to-date Class "0" Insulation gloves rated at 1000 V with leather protectors.
  - Visually and functionally inspect the gloves before use.
  - Wear the Insulation gloves with leather protectors at all times when working with the high-voltage battery assembly, whether the system is energised or not.

Failure to follow the procedures exactly as written may result in serious injury or death.

Danger: The Volt Battery Pack will utilise an exchange program. Please consult the most recent revision of bulletin/PI #PIP4841, available in Service Information (SI), for a list of approved Volt Battery Pack service procedures. Components that may be removed and serviced without exchanging the complete battery pack are identified in the bulletin/PI. Please contact the GM Technical Assistance Centre (1-877-446-8227) if you have any questions.

1. Disable the high-voltage system. Refer to High Voltage Disabling .
2. Remove the drive motor battery. Refer to Drive Motor Battery Replacement and Shipping Preparation .
3. Support the fuel tank with an appropriate jack.

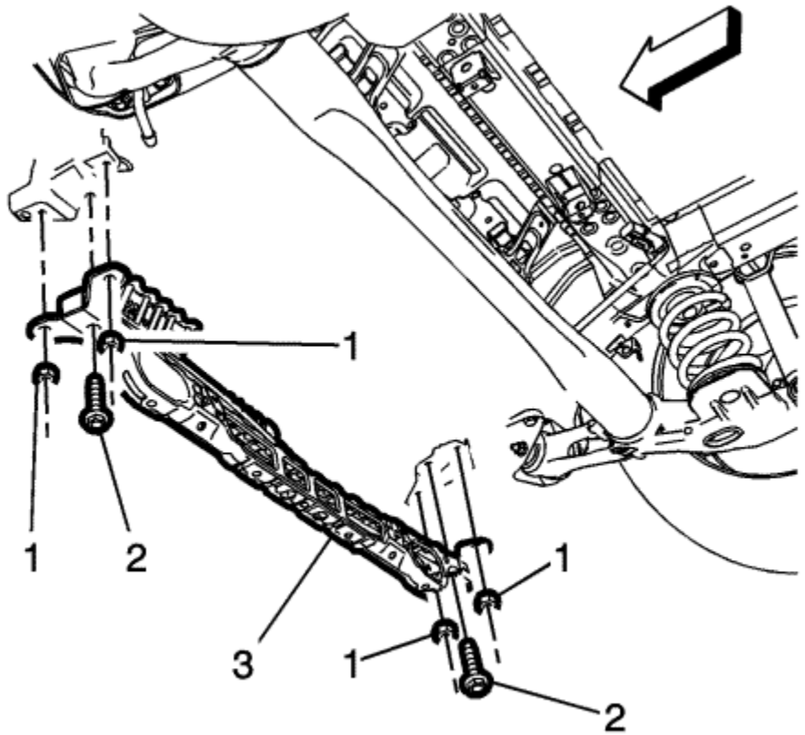

4. Remove the nuts (1) and the bolts (2) securing the floor panel bar (3) to the frame.
5. Remove the floor panel bar (3).

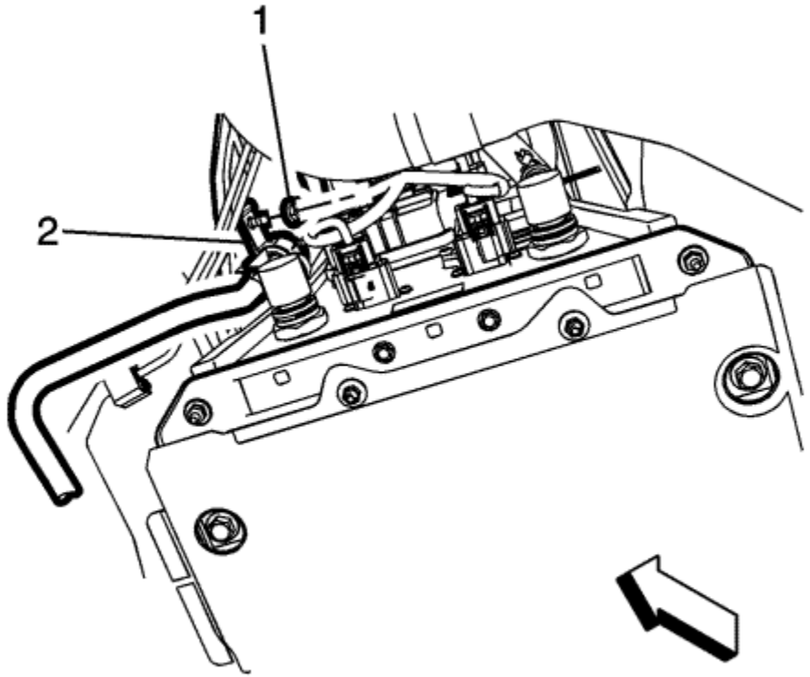

6. Remove the 300 V battery positive/negative cable retainer nut (1).

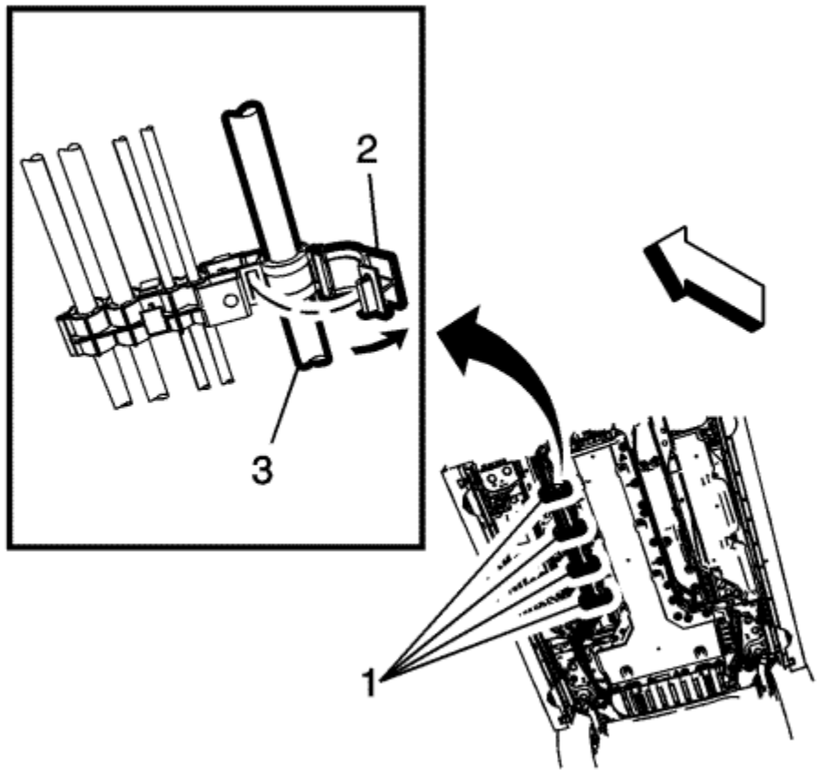

7. Detach the 300 V battery positive/negative cable (3) from the fuel rail fasteners (1).
8. Swing the individual fuel line clips (2) open.

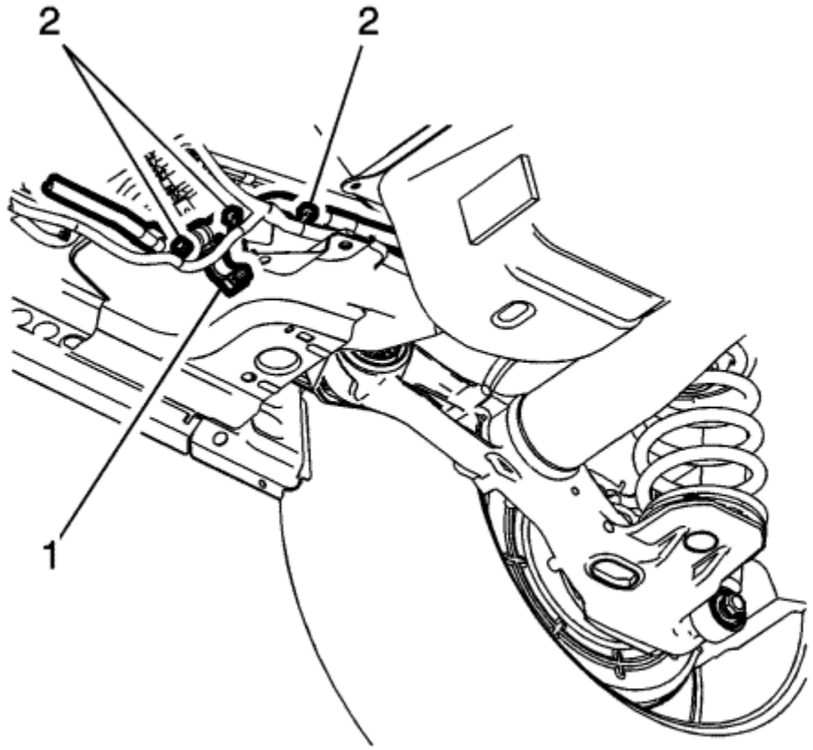

9. Working towards the rear of the vehicle, detach the fuel line clip (1) and cables ties (2).

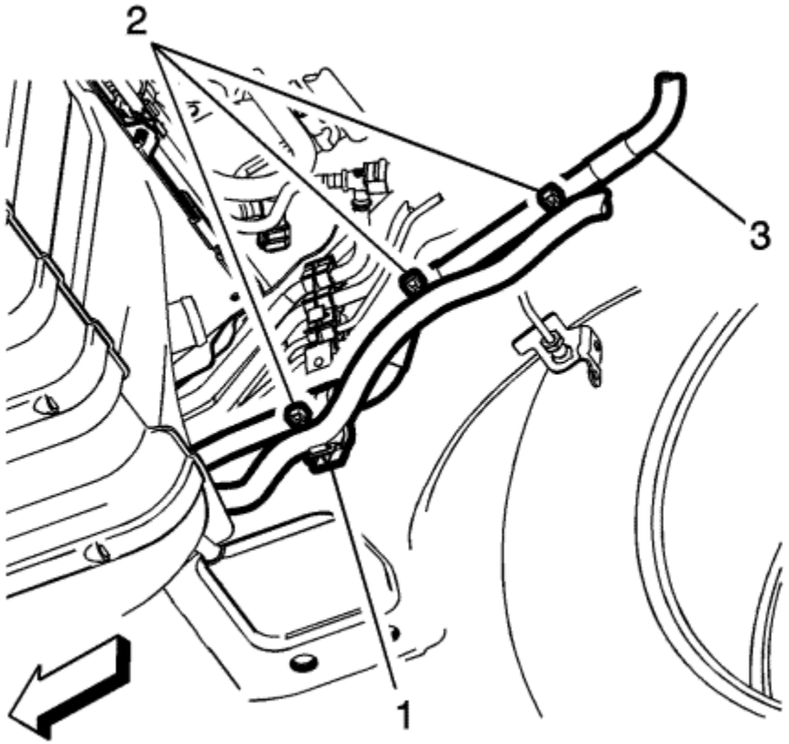

10. Unclip the fuel line clip (1) and the cable ties (2).

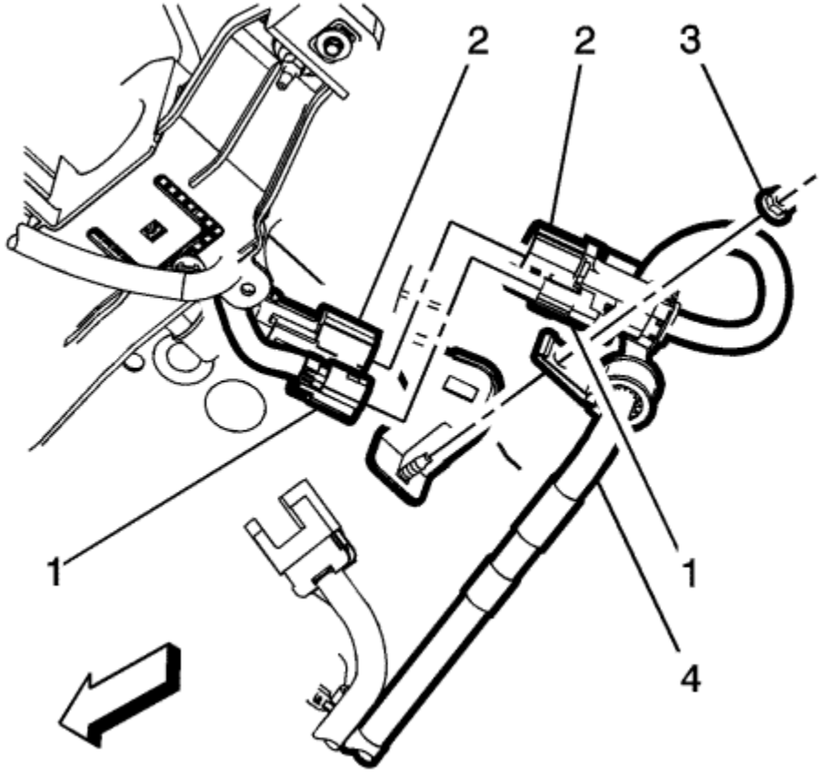

11. Disconnect the high-voltage inter-lock loop connector (1) and the 300 V battery positive/negative cable connector (2).
12. Remove the 300 V battery positive/negative cable fastener nut (3).

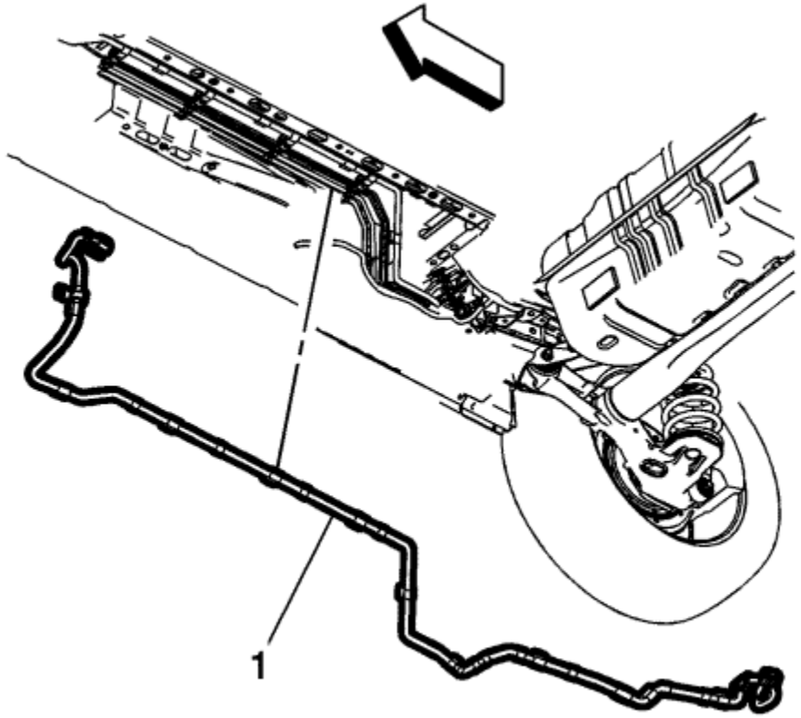

13. Remove the 300 V battery positive/negative cable (1) from the vehicle.

Installation Procedure

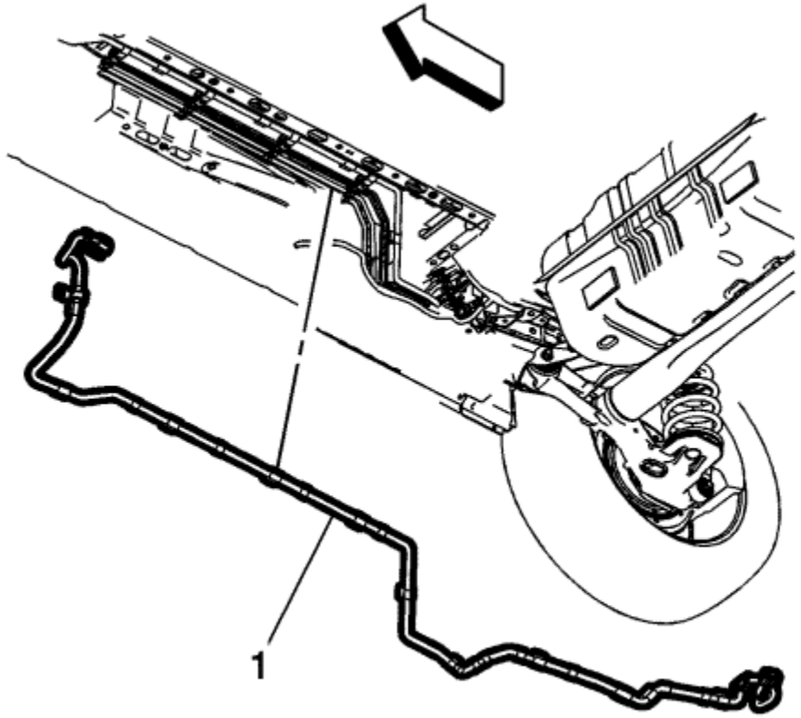

1. Position the 300 V battery positive/negative cable (1) below the vehicle.

   Caution: Refer to Fastener Caution in the Preface section.

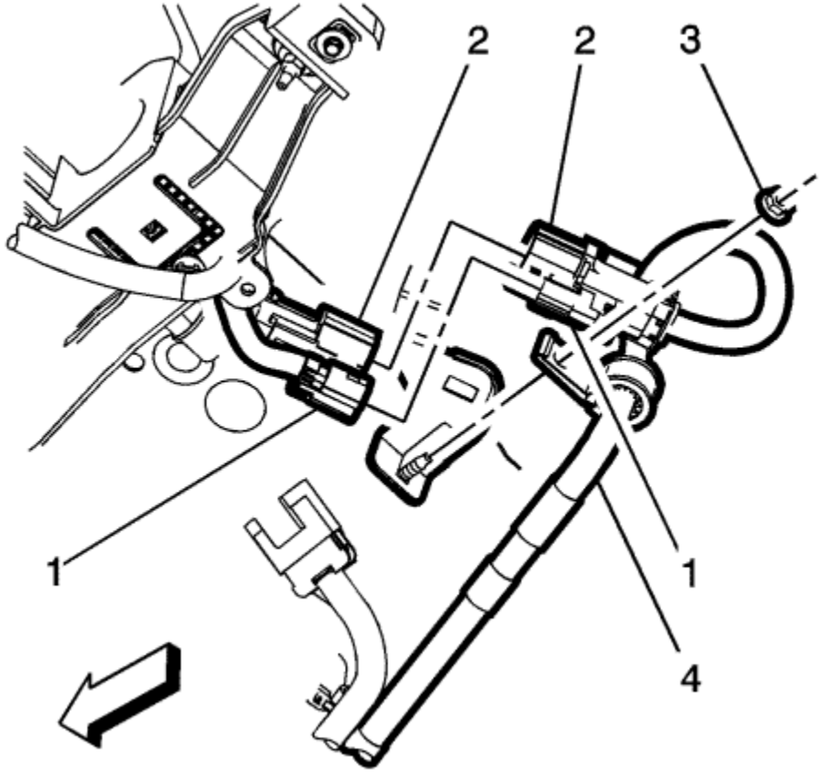

2. Connect the 300 V battery positive/negative retainer and nut (3) to the bracket stud. Tighten to **8 N·m (71 lb in)**.
3. Connect the 300 V battery positive/negative cable connector (2) to the accessory DC power control module.
4. Connect the high-voltage inter-lock loop connector (1) to the accessory DC power control module.

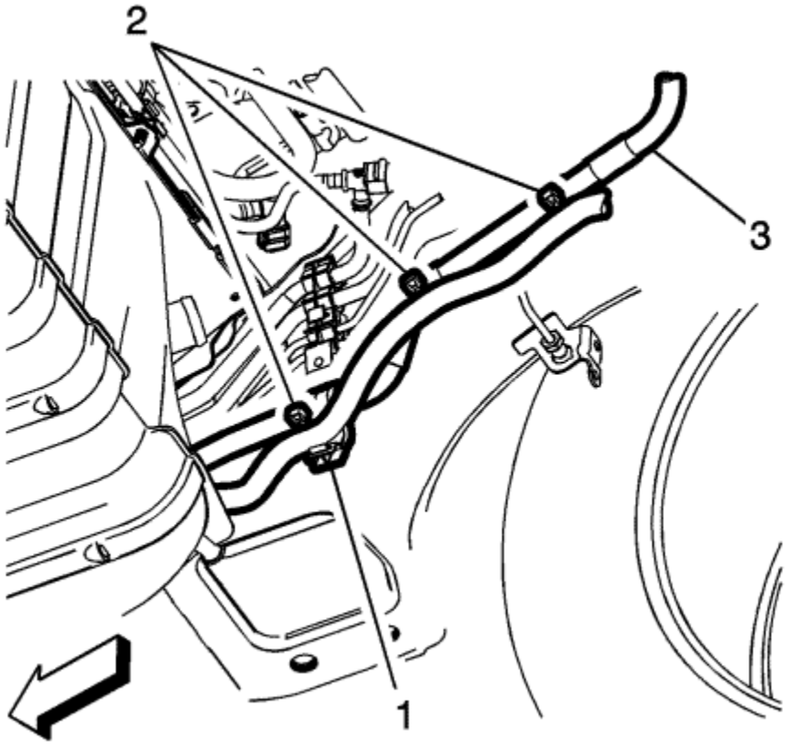

5. Install the 300 V battery positive/negative cable into the fuel line retainer with clip (1).

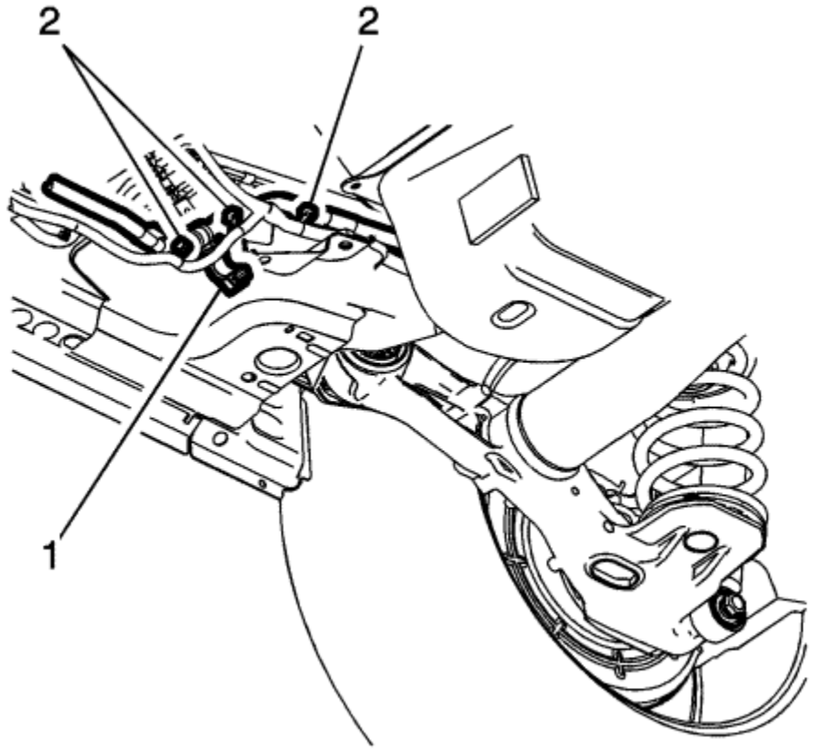

6. Install the 300 V battery positive/negative cable into the fuel line retainer with clip (1).

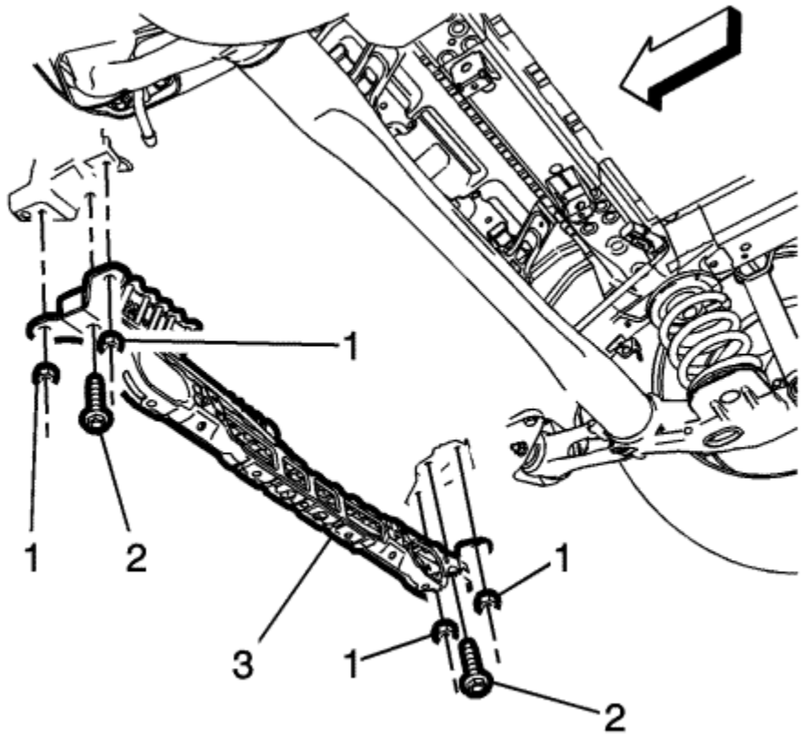

7. Install the floor panel bar (3) to the frame mounts. Tighten the following:
   - Floor panel bar nuts (1) to **22 N·m (16 lb ft)**.
   - Floor panel bar bolts (2) to **58 N·m (43 lb ft)**.

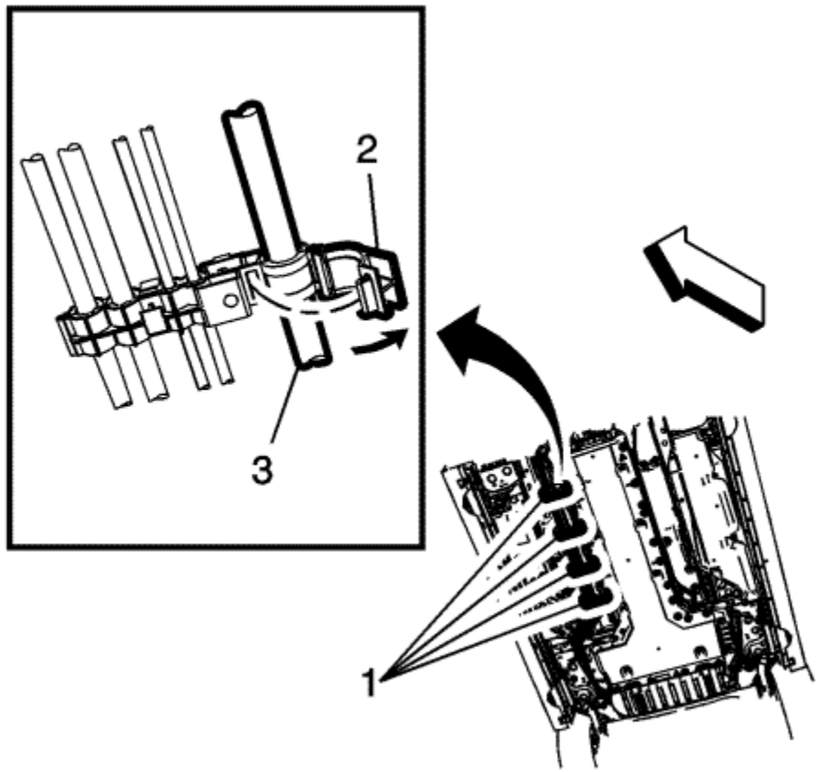

8. Connect the 300 V battery positive/negative cable into the fuel line retainer clips (1).
9. Install the drive motor battery. Refer to Drive Motor Battery Replacement and Shipping Preparation .

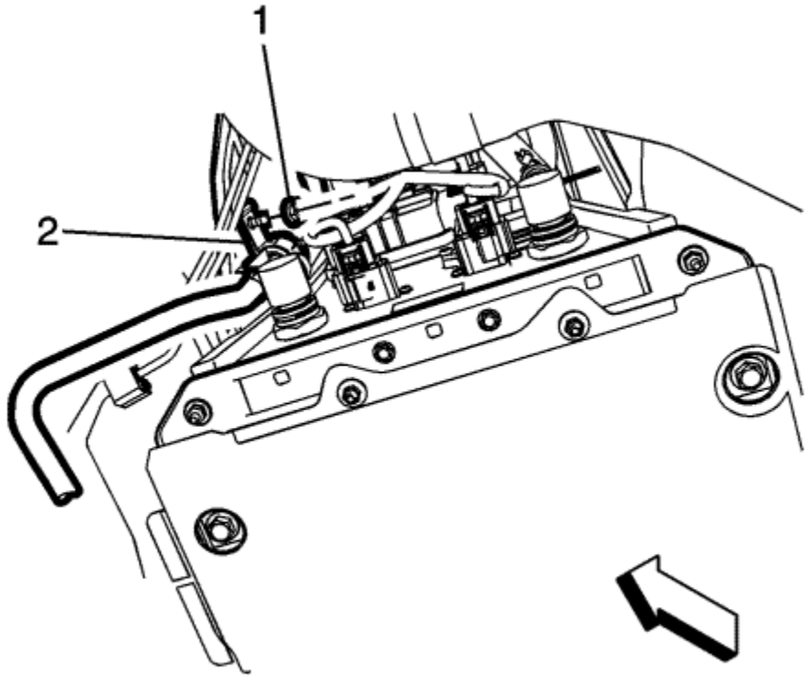

10. Install the 300 V battery positive/negative cable retainer to the stud and tighten nut (1) to **8 N·m (71 lb in)**.

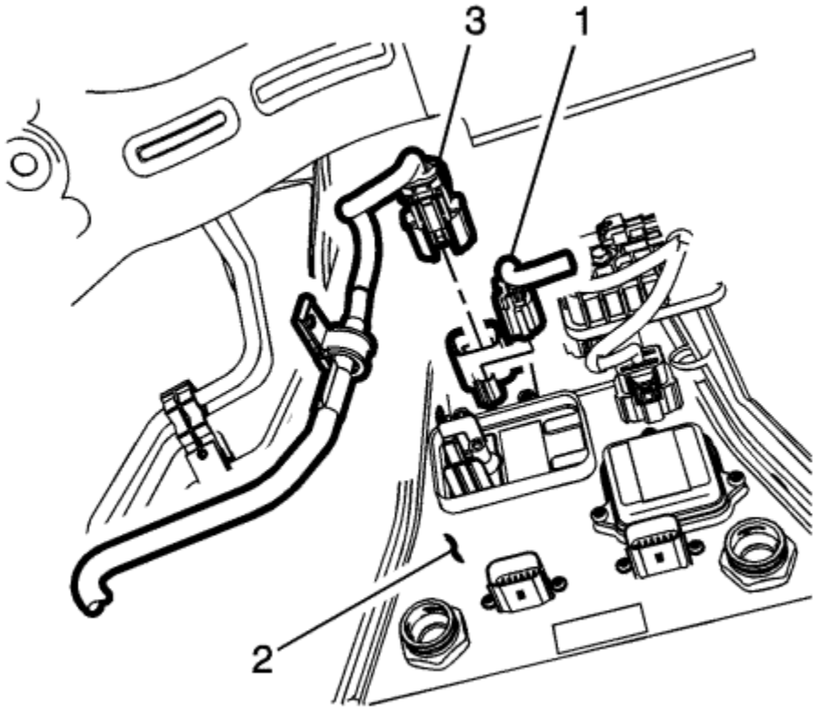

11. Connect the 300 V battery positive/negative cable connector (3) to the drive motor battery (3).
12. Connect the high-voltage inter-lock loop connector (1).

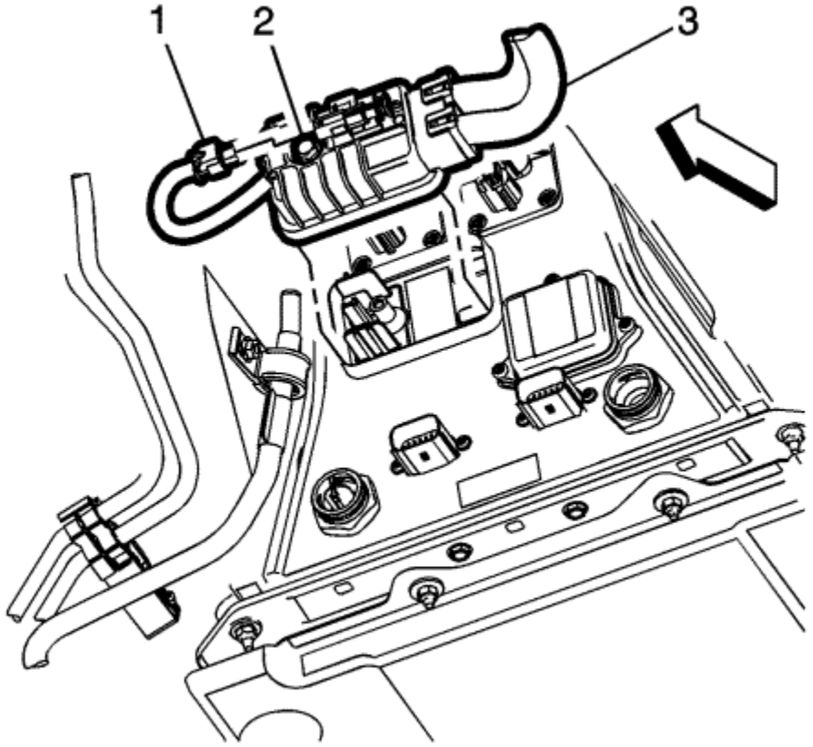

13. Connect the high-voltage inter-lock loop connector (1).
14. Install the connector (3) and tighten the bolt (1) to **8 N·m (71 lb in)**.

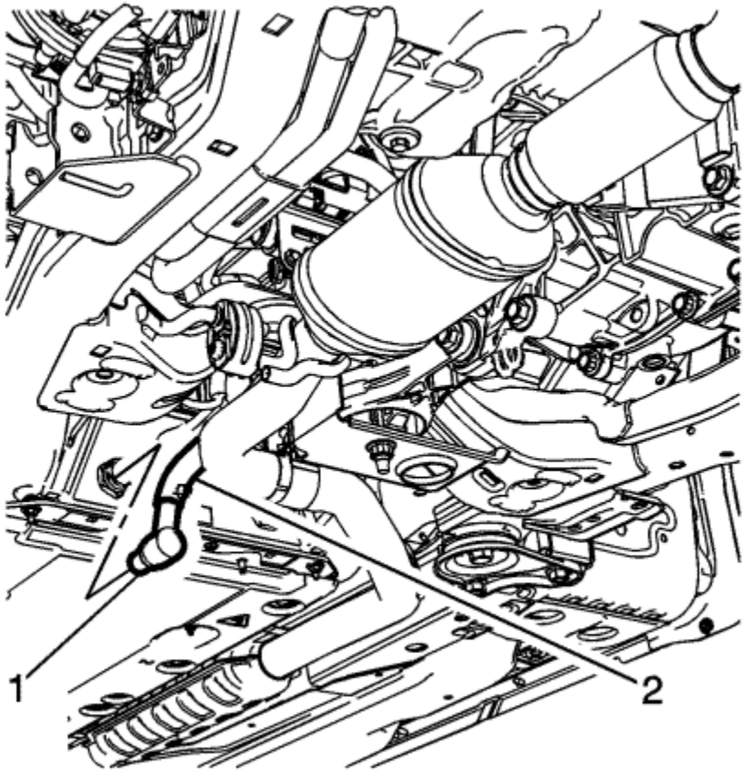

15. Connect the drive motor battery coolant cooler inlet hose fitting (1).
16. Fill the drive motor battery cooling system. Refer to Drive Motor Battery Cooling System Draining and Filling .
17. Enable the high-voltage system. Refer to High-Voltage Enabling .
18. Clear the secure high-voltage DTCs. Refer to Clear Secured High-Voltage DTCs .
19. Rest the Hybrid/EV battery pack data. Refer to Hybrid/EV Battery Pack Data Reset .
20. Perform a Hybrid/EV battery pack capacity learn procedure. Refer to Hybrid/EV Battery Pack Capacity Learn .

© Copyright Chevrolet. All rights reserved

Drive Motor Battery Replacement and Shipping Preparation

Special Tool

1. *EL 49976* Battery Pack Lifting Fixture
2. *EL 50209* Battery Terminal Covers

For equivalent regional tools, refer to Special Tools .

Removal Procedure

Danger: Always perform the High-Voltage Disabling procedure prior to servicing any High Voltage component or connection. Personal Protection Equipment (PPE) and proper procedures must be followed.

The High-Voltage Disabling procedure will perform the following tasks:

- Identify how to disable high voltage.
- Identify how to test for the presence of high voltage.
- Identify conditions under which high voltage is always present and personal protection equipment (PPE) and proper procedures must be followed.

Before working on any high-voltage system, be sure to wear the following Personal Protection Equipment:

- Safety goggles with appropriate side shields when within 15 metres (50 feet) of the vehicle, either indoors or outdoors.
- Certified and up-to-date Class "0" Insulation gloves rated at 1000 V with leather protectors.
  - Visually and functionally inspect the gloves before use.
  - Wear the Insulation gloves with leather protectors at all times when working with the high-voltage battery assembly, whether the system is energised or not.

Failure to follow the procedures exactly as written may result in serious injury or death.

Danger: The Volt Battery Pack will utilise an exchange program. Please consult the most recent revision of bulletin/PI #PIP4841, available in Service Information (SI), for a list of approved Volt Battery Pack service procedures. Components that may be removed and serviced without exchanging the complete battery pack are identified in the bulletin/PI. Please contact the GM Technical Assistance Centre (1-877-446-8227) if you have any questions.

1. Disable the high-voltage system. Refer to High Voltage Disabling .
2. Remove the rear heat shields. Refer to Exhaust Pipe Heat Shield Replacement : Rear → Center → Front .
3. Remove the right underbody air deflectors. Refer to Underbody Front Air Deflector Replacement - Right Side .

Note: Not necessary to remove the underbody battery shield.

4. Remove the drive motor generator radiator surge tank cap.

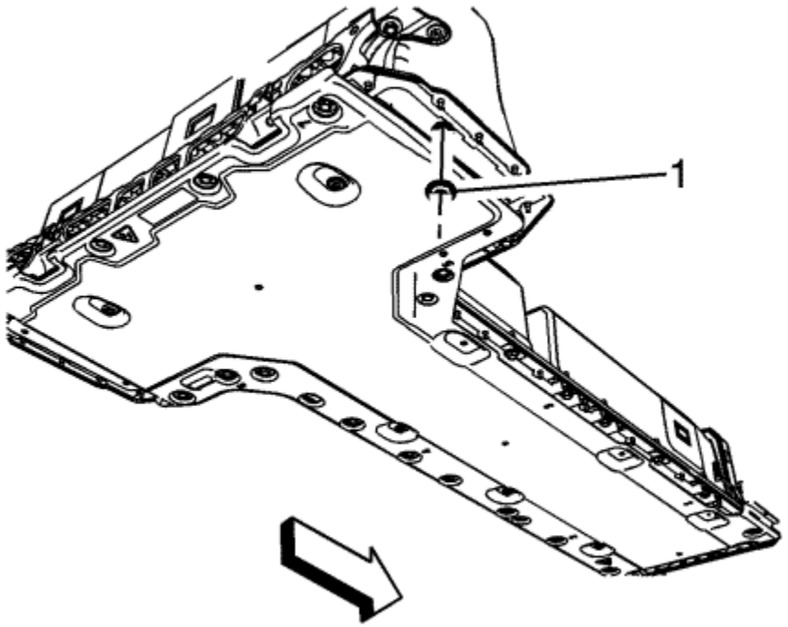

5. Using a drain pan to collect any fluid, remove the drain plug (1) and drain the drive motor battery of fluid.

Note: Document the colour of the fluid and the quantity of fluid drained. Replace the drain plug with a NEW drain plug.

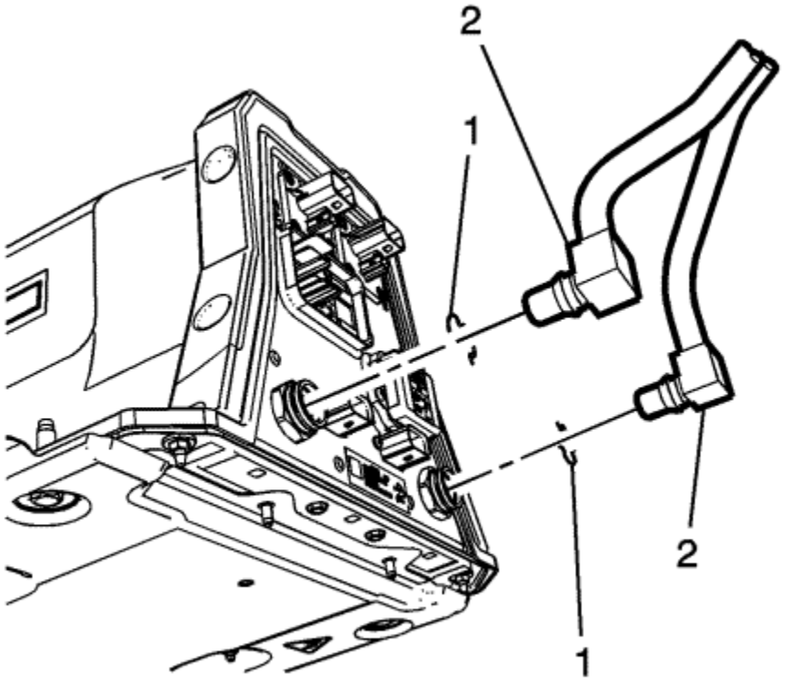

6. Using a drain pan to collect any coolant, remove the metal coolant pipe retainers (1) and disconnect the inlet and outlet coolant pipes (2).

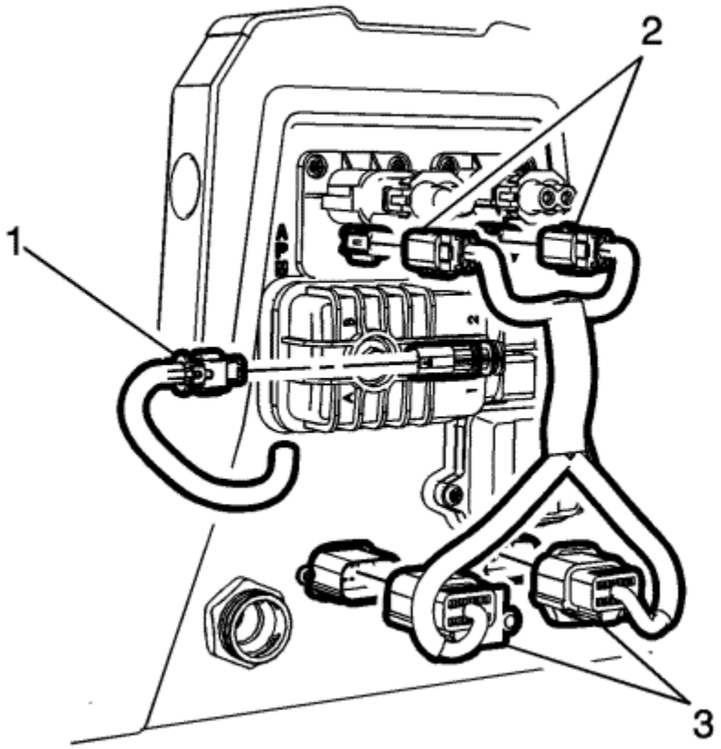

7. Disconnect the following from the drive motor battery:
   - Body Harness Connector X5 (1).
   - Interlock Loop Connectors X3, X4 (2).
   - Connectors X1 and X2 (3).

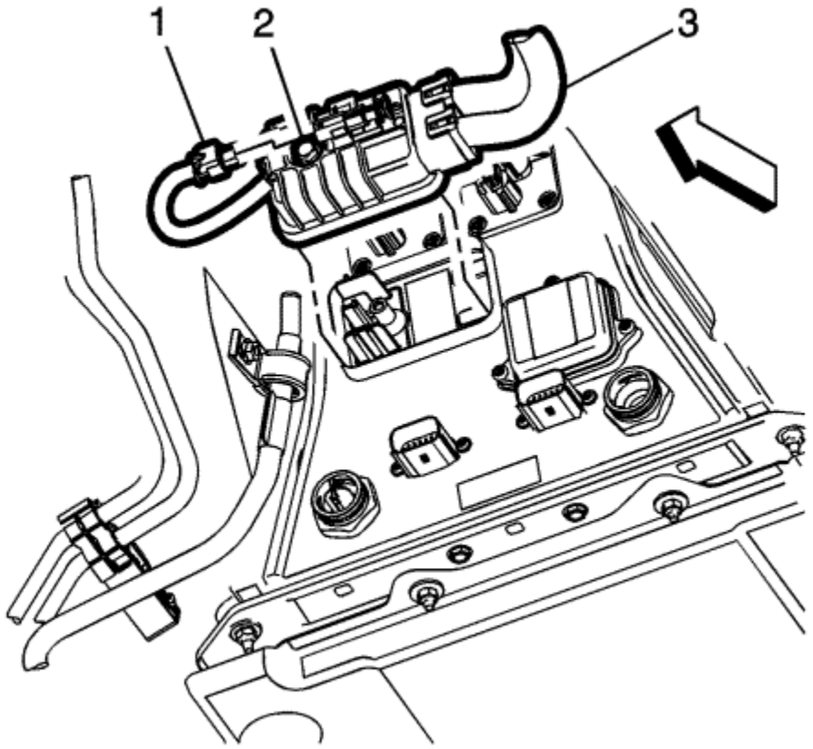

8. Remove the 300 V positive and negative cable connector mounting bolt (2).
9. Remove the 300 V positive and negative cable connector (3).

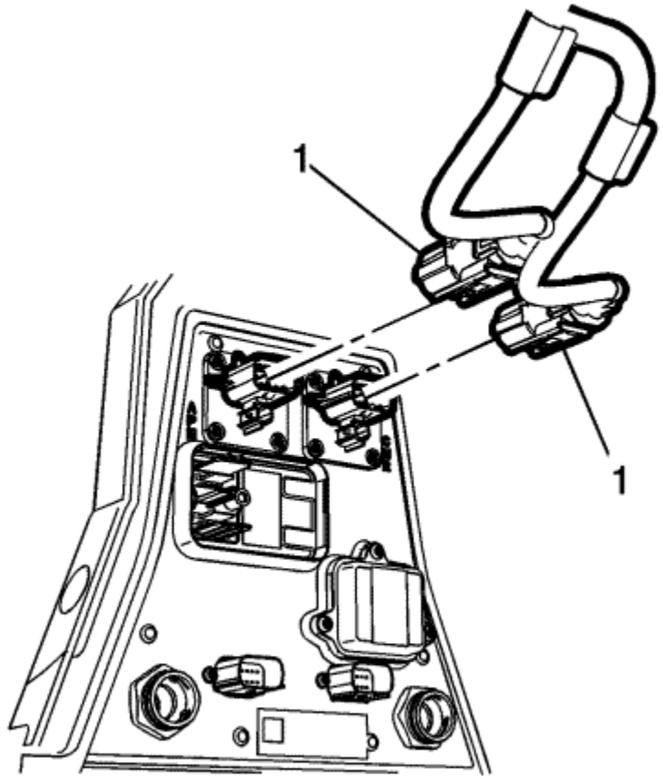

10. Remove connectors X4 and X5 (1).

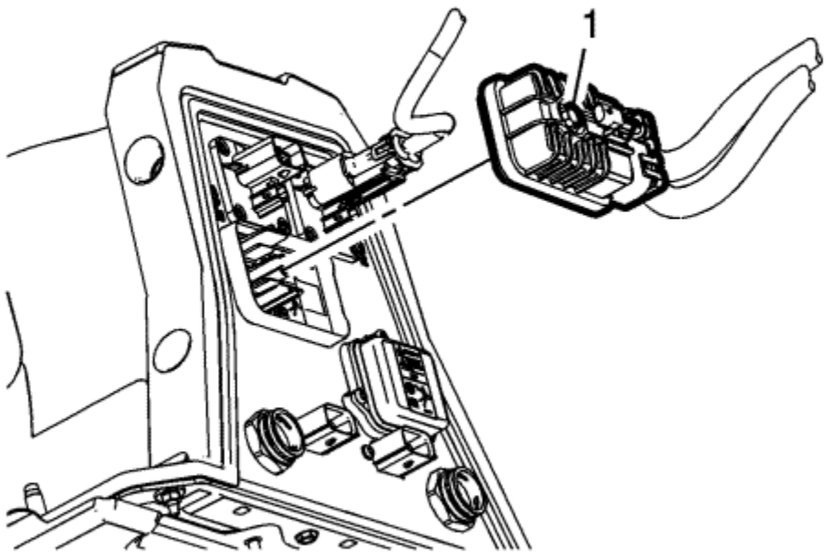

11. Remove the 300 volt cable connector fastener (1).

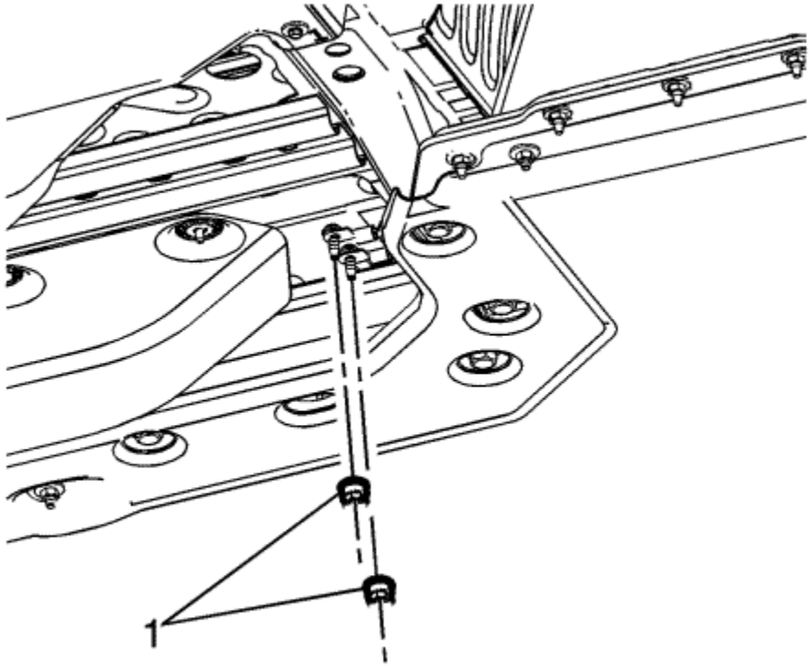

12. Remove the earth strap fasteners (1), from the body side.

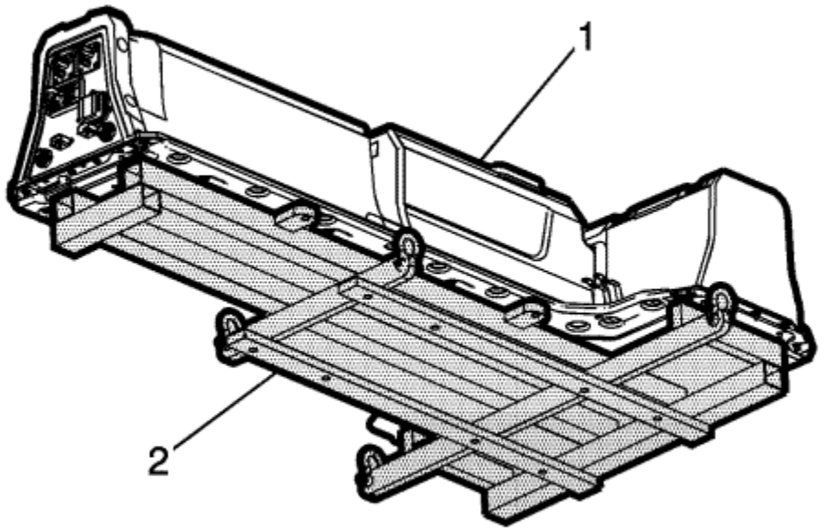

13. Support the battery (1) using the *EL 49976* lifting fixture, in conjunction with a suitable lift table. The battery mass is approximately 204 kg (450 lbs).

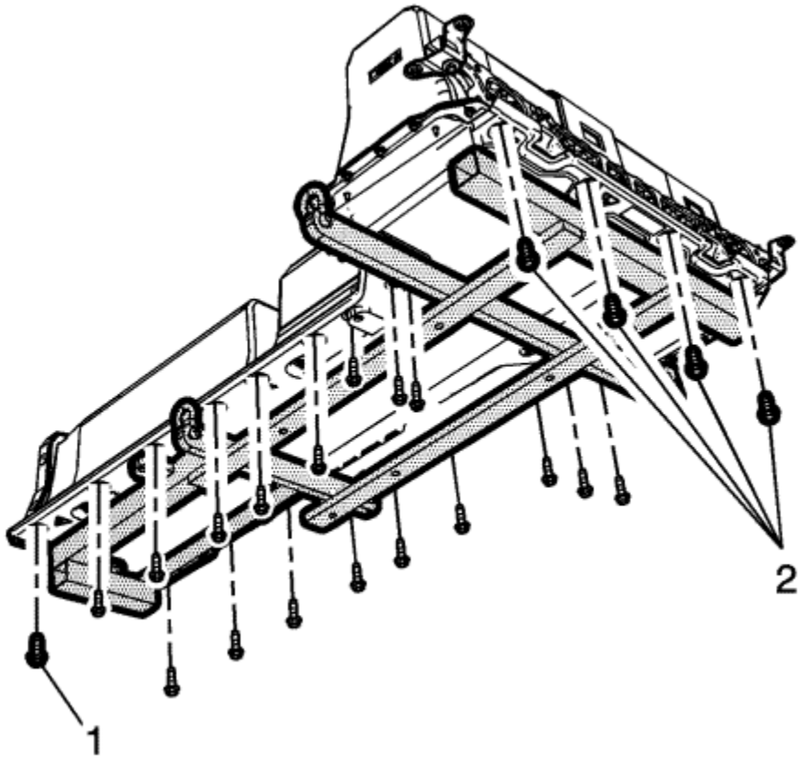

14. Remove the battery tray fasteners (1) and (2).
15. Remove the drive motor generator battery and the *EL-49976* battery lifting fixture from the lift table and set aside.
16. Remove the replacement drive motor generator battery and the replacement *EL-49976* battery lifting fixture from the container and mount to the lift table.
17. If the drive motor generator battery is to be out of the vehicle for an extended period of time, place the drive motor generator battery in a safe location with the appropriate safety cones and protocols. Install *EL50209* protective terminal covers on connection points.
18. Ensure that tape covers the manual disconnect terminals on the drive motor generator battery.
19. If the drive motor generator battery is being returned, prepare the drive motor generator battery for safe shipping by performing the following:
    - Install coolant plugs (2) in the coolant lines. Coolant plugs can be removed from the new service battery assembly and installed in the returned battery. Additional coolant plugs (GM p/n 22770854) can be ordered if they are needed.

      Note: As part of the battery removal process, all coolant should be drained from the battery pack.

    - Install the Manual Service Disconnect (MSD) Cover. The MSD cover can be removed from the new service battery assembly and installed in the returned battery. Additional MSD covers (GM p/n 22770856) can be ordered if they are needed.

      Note: The MSD lever should remain with the vehicle and not be returned with the battery assembly.

- Install the High-Voltage Connector Cover. The high-voltage connector cover can be removed from the service battery and installed on the returned battery. If the service battery assembly did not come with a high-voltage connector cover, additional covers can be ordered by calling 1-800 GM TOOLS. Reference tool # EL-50209 when placing your order.

  Note: The failed battery must be removed and returned with a battery assembly lifting fixture (GM Special Tool EL-49976). This lifting fixture will be attached to the failed battery and placed in the shipping container. Each new service battery will come with a battery assembly lifting fixture for use during installation. You will keep this fixture for servicing future battery removals.

Installation Procedure

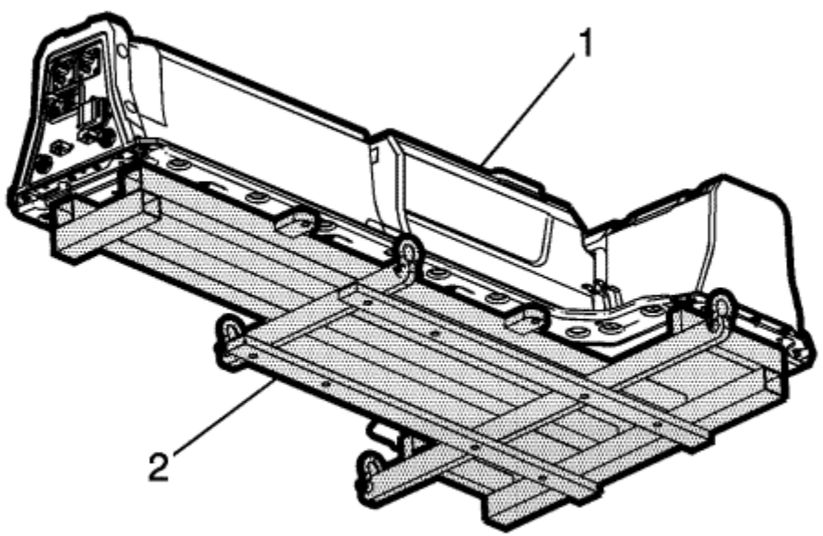

1. Using the *EL 49976* lifting fixture , in conjunction with a suitable lift table, raise the generator drive motor battery to the vehicle.

   Caution: Refer to Fastener Caution in the Preface section.

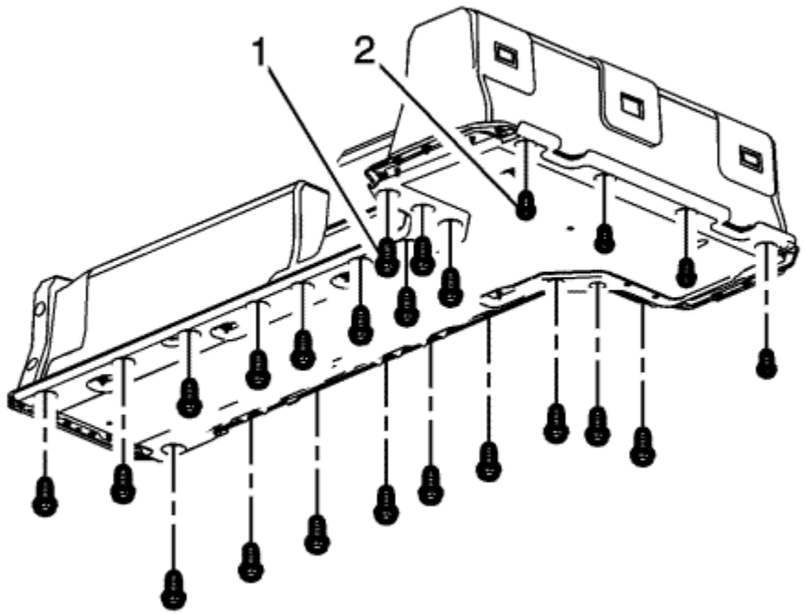

2. Tighten the battery tray fasteners (1) to **58 N·m (43 lb ft)** and tighten the battery tray fasteners (2) to **22 N·m (16 lb ft)**.

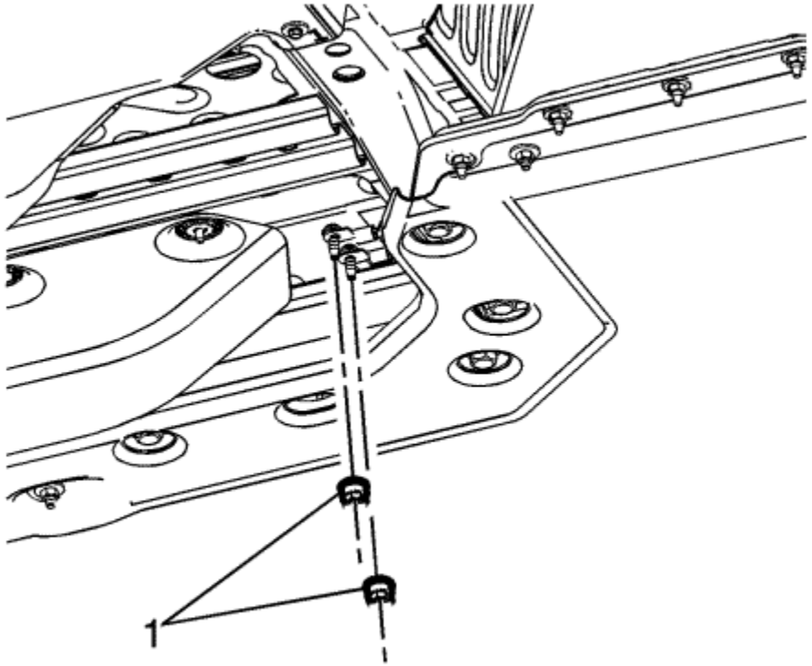

3. Install the earth strap fasteners (1) and tighten to **9 N·m (80 lb in)**.

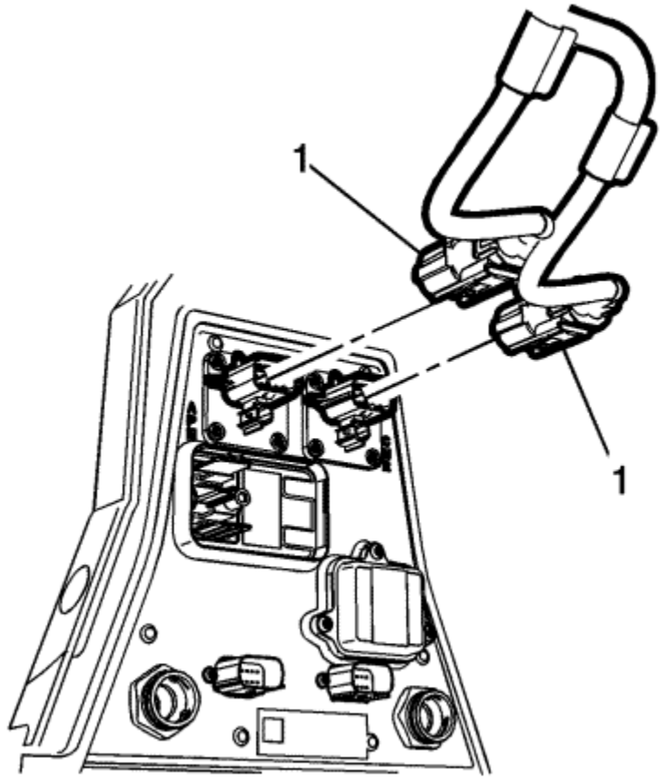

4. Install the X4 and X5 connectors (1).

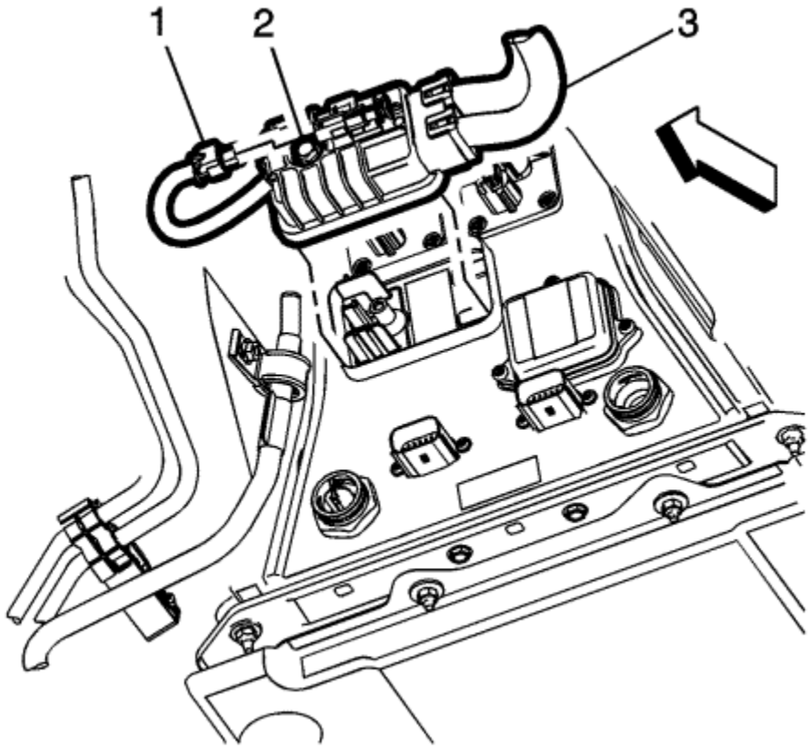

5. Connect the 300 V Cable (3) to the drive motor generator battery and tighten bolt (2) to **8 N·m (71 lb in)**.

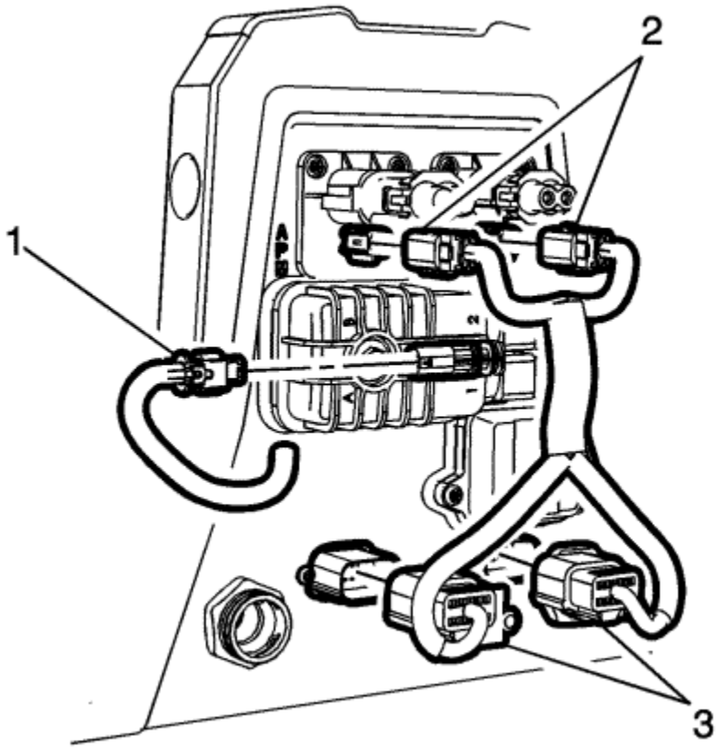

6. Connect the following to the drive motor generator battery:
   - Body Harness Connector X5 (1).
   - Interlock Loop Connectors X3, X4 (2).
   - Connectors X1 and X2 (3).

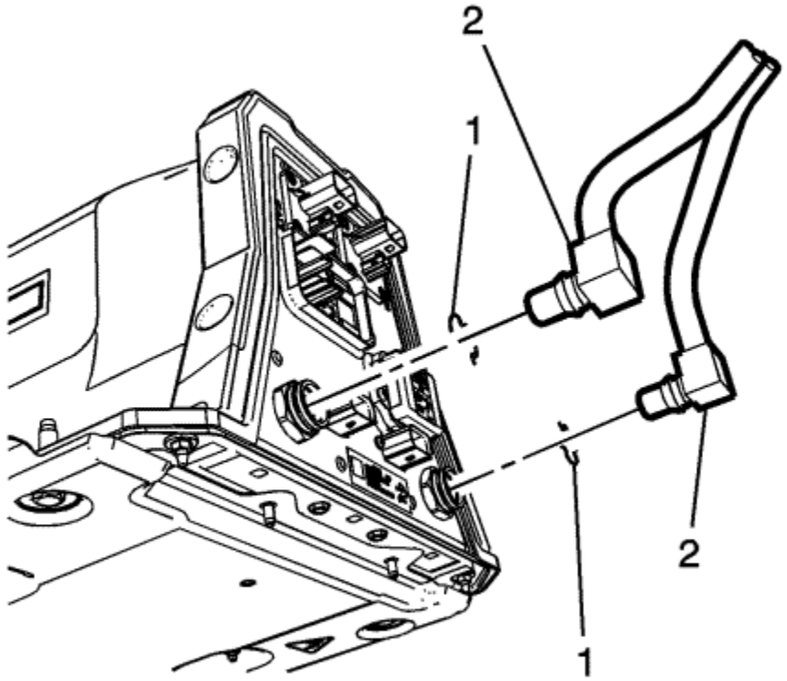

7. Connect the inlet and outlet coolant pipes (2) and install the metal coolant pipe retainers (1).
8. Install the rear heat shields. Refer to Exhaust Pipe Heat Shield Replacement : Rear → Center → Front .
9. Install the right underbody air deflectors. Refer to Underbody Front Air Deflector Replacement - Right Side .
10. Enable the high-voltage system. Refer to High-Voltage Enabling .
11. Check the battery pack cooling system for leaks. Refer to Hybrid Cooling System Leak Test .
12. Clear the secured high voltage DTC's. Refer to Clear Secured High-Voltage DTCs .
13. Reset the Hybrid/EV battery pack data. Refer to Hybrid/EV Battery Pack Data Reset .
14. Program the battery energy control module. Refer to Electronic Brake Control Module Programming and Setup .
15. Perform the Hybrid/EV battery pack capacity learn procedure. Refer to Hybrid/EV Battery Pack Capacity Learn .

&#169© Copyright Chevrolet. All rights reserved

Clear Secured High-Voltage DTCs

Clear Secured High-Voltage DTCs

The Hybrid/EV Battery Pack Clear Secured High Voltage DTCs procedure must be completed when the following components are replaced:

- Hybrid/EV Powertrain Control Module 2
- Hybrid/EV Battery Energy Control Module
- Hybrid/EV Battery Interface Control Module
- Hybrid/EV Battery Pack

The Hybrid/EV Powertrain Control Module 2 Clear Secured High Voltage DTCs procedure can be completed with a scan tool using the following steps:

1. Install the scan tool to the data link connector.

   Note: A command reject may appear on the scan tool after the first Hybrid/EV Battery Pack Clear Secured High Voltage DTCs request. Ignore this command reject.

2. Vehicle in Service Mode, select Hybrid/EV Battery Pack Clear Secured High-Voltage DTCs in the Hybrid/EV Powertrain Control Module 2 Control Functions list.
3. Follow the scan tool directions to complete the procedure.
4. Vehicle OFF and all vehicle systems OFF. It may take up to 2 minutes for all vehicle systems to power down.
5. Vehicle in Service Modeselect Hybrid/EV Battery Pack Clear Secured High Voltage DTCs in the Hybrid/EV Powertrain Control Module 2 Control Functions list.
6. Follow the scan tool directions to complete the procedure.
7. Clear any DTCs that may be set.

&#169© Copyright Chevrolet. All rights reserved

Hybrid/EV Battery Pack Data Reset

Hybrid/EV Battery Pack Data Reset

The Hybrid/EV Powertrain Control Module 2 Data Reset procedure must be completed when the following components are replaced:

- Hybrid/EV Powertrain Control Module 2
- Hybrid/EV Battery Energy Control Module
- Hybrid/EV Battery Interface Control Module
- Hybrid/EV Battery Pack

The Hybrid/EV Powertrain Control Module 2 Data Reset procedure can be completed with a scan tool using the following steps:

1. Install the scan tool to the data link connector.
2. Ignition ON, engine OFF.
3. Select Hybrid/EV Battery Pack Data Reset in the Hybrid/EV Powertrain Control Module 2 Control Functions list
4. Follow the scan tool directions to complete the procedure.
5. Clear any DTCs that may be set.

&#169© Copyright Chevrolet. All rights reserved

Hybrid/EV Battery Pack Capacity Learn

Hybrid/EV Battery Pack Capacity Learn

The Hybrid/EV Battery Pack Capacity Learn procedure must be completed when the following components are replaced:

- Hybrid/EV Powertrain Control Module 2
- Hybrid/EV Battery Energy Control Module
- Hybrid/EV Battery Interface Control Module
- Hybrid/EV Battery Pack

The Hybrid/EV Powertrain Control Module 2 Capacity Learn procedure can be completed with a scan tool using the following steps:

1. Install the scan tool to the data link connector.
2. Ignition ON, engine OFF.
3. Select Hybrid/EV Battery Pack Capacity Reset in the Hybrid/EV Powertrain Control Module 2 Control Functions list
4. Follow the scan tool directions to complete the procedure.
5. Select Hybrid/EV Battery Pack Capacity Learn in the Hybrid/EV Powertrain Control Module 2 Control Functions list
6. Follow the scan tool directions to complete the procedure.
7. Clear any DTCs that may be set.

&#169© Copyright Chevrolet. All rights reserved

Drive Motor Battery System Description

Overview

The hybrid battery contains 288 cells. Groups of three cells are welded together in-parallel called cell groups. There are a total of 96 cell groups in the hybrid battery assembly. These cell groups are electrically connected in-series. Each individual cell group is rated at 3.7 V, for a nominal system voltage of 355 V direct current. The battery cell groups are joined to form 3 distinct sections. The first 30 battery cell groups make up battery section 1. This section is adjacent to the cowl and contains battery cell groups 67 through to 96. The next 24 battery cell groups make up battery section 2. This section is located behind section 1 and contains battery cell groups 43 through to 66. The transverse battery section is section number 3 and it contains the remaining battery cell groups 1 through to 42. The 3 battery sections are individually serviceable components.

The battery energy control module monitors the voltage of the 96 battery cell groups through 4 hybrid battery interface control modules. There is one hybrid battery interface control module for section 1 and 2, with section 3 having two modules. The voltage sense lines are attached to each individual cell group, and these sense lines terminate at a connector located on the top surface of the battery section. A serviceable voltage sense harness joins this connector to the hybrid battery interface control modules, located on the top surface of the battery section. The hybrid battery interface control module encodes the voltage reading and transmits it to the battery energy control module through the battery energy control module harness. The hybrid battery interface control modules 1-4, voltage sense harnesses, generator battery control harness and battery energy control module are all considered serviceable components.

The battery energy control module will determine when a fault condition is present. Diagnostics and system status are communicated from the battery energy control module to the hybrid powertrain control module 2 through serial data. The hybrid powertrain control module 2 is the host controller for diagnostic trouble code information.

Location

The hybrid battery is located beneath the vehicle. The battery energy control module, hybrid battery interface control modules 1-4, current sensor, and high-voltage contactors are located within the hybrid battery assembly. The hybrid powertrain control module 2 is located under the front passenger seat.

© Copyright Chevrolet. All rights reserved

Special Tools

Illustration	Tool Number/ Description
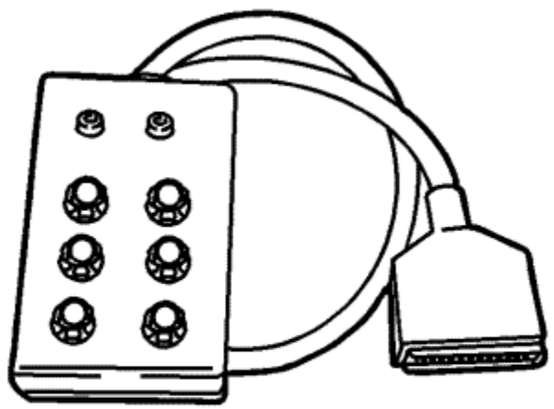	EL-48571 High-Voltage Battery Pin Out Box
	EL-48900 HEV Safety Kit

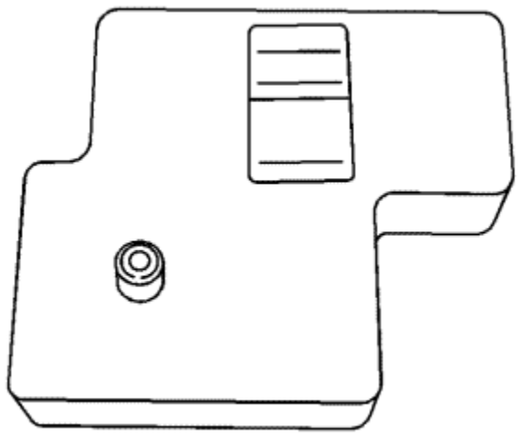	EL-50209 High-Voltage Terminal Cover
	EL-50211

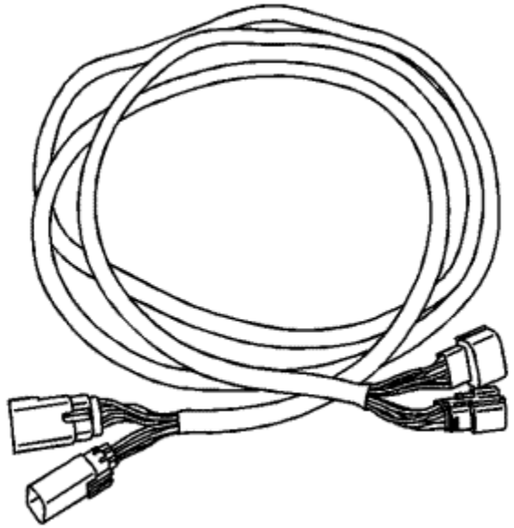	Low-Voltage Jumper Harness
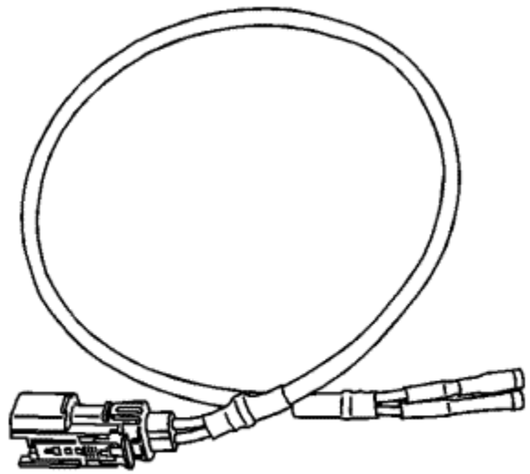	EL-50554-1 14 V Power Inverter Assurance Harness
	EL-50554-2

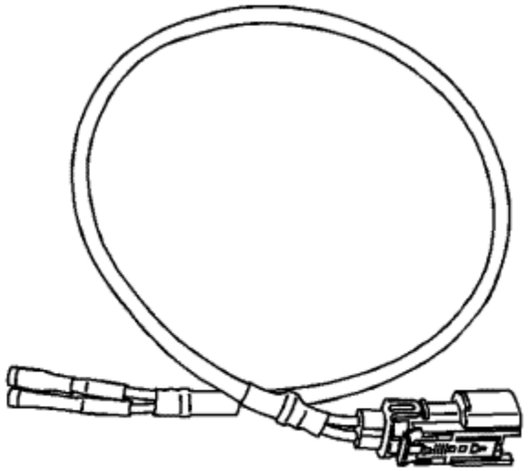	Charger Assurance Harness
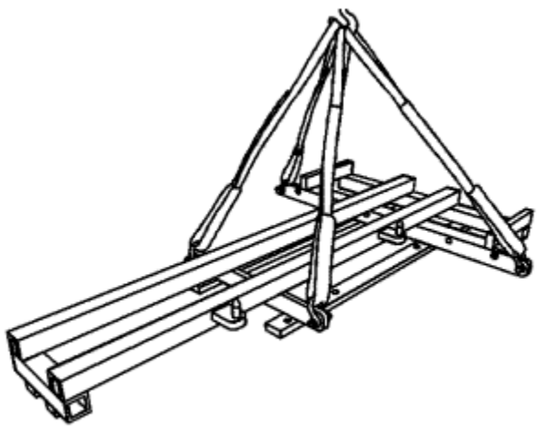	EL-49976 Hybrid/EV Battery Lifting Fixture
	EL-50772

	Insulation Multimeter
	EL-50774 Low/High-Resistance Meter

© Copyright Chevrolet. All rights reserved

Fastener Tightening Specifications

Application	Specification	
	Metric	English
Charge Port Housing Actuator Screw	3.5 N·m	31 lb in
Drive Motor Battery Charger Receptacle Fasteners	12 N·m	106 lb in

© Copyright Chevrolet. All rights reserved

Plug-In Charging Schematics

Figure 1: Charging Port Door
Figure 2: Battery Charger
Figure 3: Battery State of Charge

© Copyright Chevrolet. All rights reserved

DTC P0CF4-P0CF6

Diagnostic Instructions

- Perform the Diagnostic System Check - Vehicle prior to using this diagnostic procedure.
- Review Strategy Based Diagnosis for an overview of the diagnostic approach.
- Diagnostic Procedure Instructions provides an overview of each diagnostic category.

DTC Descriptors

DTC P0CF4: Control Pilot Circuit Performance

DTC P0CF5: Control Pilot Circuit Low Voltage

DTC P0CF6: Control Pilot Circuit High Voltage

Circuit/System Description

The hybrid/EV powertrain control module 2 monitors a pilot signal from the drive motor battery charger cable. The hybrid/EV powertrain control module 2 utilises this signal to manage the charging process between the drive motor battery charger cable and the hybrid/EV powertrain control module 2.

Under normal charging conditions the control pilot signal is generated by the drive motor battery charger cable. This diagnostic runs with the drive motor battery charger cable disconnected to verify the vehicle side circuit integrity. The diagnostic signal is generated internally by the hybrid/EV powertrain control module 2.

Conditions for Running the DTC

DTC P0CF4

- The vehicle 12 V battery system voltage needs to be above 9 V.
- The drive motor battery charger cable is disconnected and the charge port door is closed.
- Vehicle in Service Mode
- The vehicle needs to be driven above 25 km/h (16 mph) for more than 10 seconds.

DTC P0CF5

- The vehicle 12 V battery system voltage needs to be above 9 V.
- The drive motor battery charger cable is disconnected and the charge port door is closed.
- Vehicle needs to be driven above 25 km/h (16 mph) for more than 10 seconds.

DTC P0CF6

- The vehicle 12 V battery system voltage needs to be above 9 V.
- The drive motor battery charger cable is disconnected and the charge port door is closed.
- Vehicle in Service Mode.
- Vehicle needs to be driven above 25 km/h (16 mph) for more than 10 seconds.

Conditions for Setting the DTC

DTC P0CF4

The control pilot circuit is not meeting its internal range requirements for 1 second. This can only be set internal to the hybrid/EV powertrain control module 2. This is an internal circuit voltage in the hybrid/EV powertrain control module 2 and can not be measured.

DTC P0CF5

The control pilot circuit voltage divided by the system voltage is less than 0.03 for 1 second. This is an internal circuit voltage in the hybrid/EV powertrain control module 2 and can not be measured.

DTC P0CF6

The control pilot circuit voltage divided by the system voltage is greater than 0.58 for 1 second. This is an internal circuit voltage in the hybrid/EV powertrain control module 2 and can not be measured.

Action Taken When the DTC Sets

- DTC P0CF4-P0CF6 are type A DTCs
- Disables high-voltage battery charging.

Conditions for Clearing the DTC

DTC P0CF4-P0CF6 are type A DTCs.

Reference Information

Schematic Reference

Plug-In Charging Schematics

Connector End View Reference

Component Connector End Views

Description and Operation

Plug-In Charging System Description and Operation

Electrical Information Reference

- Circuit Testing
- Connector Repairs
- Testing for Intermittent Conditions and Poor Connections
- Wiring Repairs

DTC Type Reference

Powertrain Diagnostic Trouble Code (DTC) Type Definitions

Scan Tool Reference

Control Module References for scan tool information

Special Tools

EL-48900 HEV Safety Kit

For equivalent regional tools, refer to Special Tools .

Circuit/System Testing

Danger: Always perform the High-Voltage Disabling procedure prior to servicing any High Voltage component or connection. Personal Protection Equipment (PPE) and proper procedures must be followed.

The High-Voltage Disabling procedure will perform the following tasks:

- Identify how to disable high voltage.
- Identify how to test for the presence of high voltage.
- Identify conditions under which high voltage is always present and personal protection equipment (PPE) and proper procedures must be followed.

Before working on any high-voltage system, be sure to wear the following Personal Protection Equipment:

- Safety goggles with appropriate side shields when within 15 metres (50 feet) of the vehicle, either indoors or outdoors.
- Certified and up-to-date Class "0" Insulation gloves rated at 1000 V with leather protectors.
  - Visually and functionally inspect the gloves before use.
  - Wear the Insulation gloves with leather protectors at all times when working with the high-voltage battery assembly, whether the system is energised or not.

Failure to follow the procedures exactly as written may result in serious injury or death.

1. Vehicle OFF, disable the high voltage at the T18 battery charger. Refer to High Voltage Disabling . Disconnect the X3 harness connector at the T18 battery charger and the X2 harness connector at the K114B hybrid/EV powertrain control module 2.

   Note: The following tests should be conducted at the hybrid battery charger receptacle pins behind the charge port door, not the hybrid battery charger receptacle harness connector.

2. Test for infinite resistance between control pilot signal 1 circuit X98 hybrid battery charger receptacle terminal B and the terminals listed below:
   - X98 hybrid battery charger receptacle terminal A
   - X98 hybrid battery charger receptacle terminal C
   - X98 hybrid battery charger receptacle terminal D
   - X98 hybrid battery charger receptacle terminal E

   If less than the specified range, repair the control pilot signal 1 circuit for a short-circuit between the circuits.
3. If all circuits test normal, replace the K114B hybrid/EV powertrain control module 2.

Repair Instructions

Perform the Diagnostic Repair Verification after completing the diagnostic procedure.

Control Module References for hybrid/EV powertrain control module 2 replacement, programming and set-up

&#169© Copyright Chevrolet. All rights reserved

DTC P0CF9 or P0D01

Diagnostic Instructions

- Perform the Diagnostic System Check - Vehicle prior to using this diagnostic procedure.
- Review Strategy Based Diagnosis for an overview of the diagnostic approach.
- Diagnostic Procedure Instructions provides an overview of each diagnostic category.

DTC Descriptors

DTC P0CF9: Control Pilot Charging Switch Performance

DTC P0D01: Control Pilot Charging Ventilation Switch Performance

Circuit/System Description

The hybrid/EV powertrain control module 2 has two internal switches used to modify the control pilot signal. The first internal switch modifies the control pilot signal to indicate to the drive motor battery charger cable that the vehicle is either ready or not ready to accept energy. The second internal switch modifies the control pilot signal to indicate to the drive motor battery charger cable whether indoor ventilation is required.

Conditions for Running the DTC

- The vehicle 12 V battery system voltage needs to be above 9 V.
- The drive motor battery charger cable is disconnected and the charge port door is closed.
- Vehicle in Service Mode.
- The diagnostics for DTC P0CF4-P0CF6 must have passed before these will run.

Conditions for Setting the DTC

The hybrid/EV powertrain control module 2 measures a pilot signal voltage out of range for 10 seconds. This is an internal circuit voltage in the hybrid/EV powertrain control module 2 and can not be measured.

Action Taken When the DTC Sets

- DTC P0CF9 and P0D01 are type A DTCs
- Disables the high-voltage battery charging.

Conditions for Clearing the DTC

DTC P0CF9 and P0D01 are type A DTCs.

Reference Information

Schematic Reference

Plug-In Charging Schematics

Connector End View Reference

Component Connector End Views

Description and Operation

Plug-In Charging System Description and Operation

Electrical Information Reference

- Circuit Testing
- Connector Repairs
- Testing for Intermittent Conditions and Poor Connections
- Wiring Repairs

DTC Type Reference

Powertrain Diagnostic Trouble Code (DTC) Type Definitions

Scan Tool Reference

Control Module References for scan tool information

Special Tools

EL-48900 HEV Safety Kit

For equivalent regional tools, refer to Special Tools .

Circuit/System Verification

Verify that DTC P0CF9 or P0D01 is not set.

If either of the DTCs are set, replace the K114B hybrid/EV powertrain control module 2.

Repair Instructions

Perform the Diagnostic Repair Verification after completing the diagnostic procedure.

Control Module References for hybrid/EV powertrain control module 2 replacement, programming and set-up

&#169© Copyright Chevrolet. All rights reserved

DTC P0D1F

Diagnostic Instructions

- Perform the Diagnostic System Check - Vehicle prior to using this diagnostic procedure.
- Review Strategy Based Diagnosis for an overview of the diagnostic approach.
- Diagnostic Procedure Instructions provides an overview of each diagnostic category.

DTC Descriptor

DTC P0D1F: Control Module Date/Time Synchronization Performance

Circuit/System Description

The hybrid/EV powertrain control module 2 monitors the date and time data it receives from the radio. This time information is used to ensure the module's internal clock is synchronised to the customer's local time. The Time of Day Charging feature utilises this internal clock to keep track of time and alarms for delayed charging modes. If this radio time data is received during a drive cycle, the system is considered synchronised.

Conditions for Running the DTC

The vehicle needs to go from Vehicle OFF to Vehicle in Service Mode to start the diagnostic.

Conditions for Setting the DTC

The vehicle is driven for more than 5 consecutive drive cycles where trip distance exceeds 15 Kilometres, and the date and time were unavailable from the Radio.

Action Taken When the DTC Sets

- DTC P0D1F is a type C DTC.
- On the Navigation screen "Default Charge Mode: Immediately" is displayed.
- The battery charger Time Of Day charging option is disabled, and charging mode is set to IMMEDIATE.

Conditions for Clearing the DTC

DTC P0D1F is a type C DTC.

Reference Information

Schematic Reference

Plug-In Charging Schematics

Connector End View Reference

Component Connector End Views

Description and Operation

Plug-In Charging System Description and Operation

Electrical Information Reference

- Circuit Testing
- Connector Repairs
- Testing for Intermittent Conditions and Poor Connections
- Wiring Repairs

DTC Type Reference

Powertrain Diagnostic Trouble Code (DTC) Type Definitions

Scan Tool Reference

Control Module References for scan tool information

Special Tools

EL-48900 HEV Safety Kit

For equivalent regional tools, refer to Special Tools .

Circuit/System Verification

1. Verify no radio DTC's are set.
   If any radio DTC's are set, refer to Diagnostic Trouble Code (DTC) List - Vehicle .
2. Verify that the scan tool radio/Data Display/Second parameter is incrementing.
   If seconds are not incrementing, refer to Radio Programming and Setup .
3. Replace the K114B hybrid/EV powertrain control module 2.

Repair Instructions

Perform the Diagnostic Repair Verification after completing the diagnostic procedure.

Control Module References for hybrid/EV powertrain control module 2 replacement, programming and set-up

&#169© Copyright Chevrolet. All rights reserved

DTC P0D20, P0D22, P1EFA or P1EFB

Diagnostic Instructions

- Perform the Diagnostic System Check - Vehicle prior to using this diagnostic procedure.
- Review Strategy Based Diagnosis for an overview of the diagnostic approach.
- Diagnostic Procedure Instructions provides an overview of each diagnostic category.

DTC Descriptors

DTC P0D20: Battery Charger Output Voltage Performance

DTC P0D22: Battery Charger Output Current Performance

DTC P1EFA: Battery Charger High-Voltage Converter 1 Input Current Too High

DTC P1EFB: Battery Charger High-Voltage Converter 2 Input Current Too High

Circuit/System Description

The hybrid/EV powertrain control module 2 monitors the battery charger high-voltage output and current output and ensures they are within the proper range. The battery charger operates in either a constant current mode or a constant voltage mode. Whichever mode you are in will determine which diagnostic will be run. The battery charger runs constant voltage mode at the beginning and end of the charge cycle and runs constant current mode most of the charging cycle.

Conditions for Running the DTC

P0D20

- The vehicle 12 V battery system voltage needs to be above 9 V.
- Battery charger is charging and in constant voltage mode which only occurs under the following conditions:
  - During charging bus precharge.
  - When the hybrid/EV battery pack is close to being fully charged.

- When the hybrid/EV battery pack is hot and the hybrid/EV battery pack cooling system is activated.

P0D22

- The vehicle 12 V battery system voltage needs to be above 9 V.
- Battery charger is charging and not in constant voltage mode
- The hybrid/EV powertrain control module 2 measures a current output of greater than about 0.5 A

P1EFA

- The vehicle 12 V battery system voltage needs to be above 9 V.
- The vehicle is connected to a 120 V AC supply and battery charging is charging the high-voltage battery supply.

P1EFB

- The vehicle 12 V battery system voltage needs to be above 9 V.
- The vehicle is connected to a 240 V AC supply and battery charging is charging the high-voltage battery supply.

Conditions for Setting the DTC

P0D20

The hybrid/EV powertrain control module 2 measures that the battery charging bus voltage is not within about 15 % of the commanded voltage for about 5 seconds.

P0D22

The hybrid/EV powertrain control module 2 measures that the battery charging bus current is not within an acceptable percentage of the commanded current for about 40 seconds.

P1EFA, P1EFB

The battery charger detects an internal over-current condition. This is an internal measurement to the battery charger.

Action Taken When the DTC Sets

- DTC P0D20 and P0D22 are type A DTCs.
- DTC P1EFA and P1EFB are type C DTCs.
- Disables the vehicle high-voltage battery charging.

Conditions for Clearing the DTC

- DTC P0D20 and P0D22 are type A DTCs.
- DTC P1EFA and P1EFB are type C DTCs.

Reference Information

Schematic Reference

Plug-In Charging Schematics

Connector End View Reference

Component Connector End Views

Description and Operation

Plug-In Charging System Description and Operation

Electrical Information Reference

- Circuit Testing
- Connector Repairs
- Testing for Intermittent Conditions and Poor Connections
- Wiring Repairs

DTC Type Reference

Powertrain Diagnostic Trouble Code (DTC) Type Definitions

Scan Tool Reference

Control Module References for scan tool information

Special Tools

EL-48900 HEV Safety Kit

For equivalent regional tools, refer to Special Tools .

Circuit/System Testing

Danger: Always perform the High-Voltage Disabling procedure prior to servicing any High Voltage component or connection. Personal Protection Equipment (PPE) and proper procedures must be followed.

The High-Voltage Disabling procedure will perform the following tasks:

- Identify how to disable high voltage.
- Identify how to test for the presence of high voltage.
- Identify conditions under which high voltage is always present and personal protection equipment (PPE) and proper procedures must be followed.

Before working on any high-voltage system, be sure to wear the following Personal Protection Equipment:

- Safety goggles with appropriate side shields when within 15 metres (50 feet) of the vehicle, either indoors or outdoors.
- Certified and up-to-date Class "0" Insulation gloves rated at 1000 V with leather protectors.
  - Visually and functionally inspect the gloves before use.
  - Wear the Insulation gloves with leather protectors at all times when working with the high-voltage battery assembly, whether the system is energised or not.

Failure to follow the procedures exactly as written may result in serious injury or death.

1. Verify no other battery-related DTCs are set.
   If any battery-related DTCs are set, refer to Diagnostic Trouble Code (DTC) List - Vehicle for hybrid battery diagnostics.
2. Vehicle OFF, disable the high voltage at the A4 hybrid/EV battery pack and the T18 battery charger. Refer to High Voltage Disabling .
3. Disconnect the X4 connector at the T18 battery charger and at the X5 connector at the A4 hybrid/EV battery pack.
4. Test for infinite resistance between the 300 V circuit terminals listed below and earth:
   - Terminal A X4
   - Terminal B X4

   If less than the specified range, test the 300 V circuit for a short-circuit to earth.
5. Test for less than 10 Ω between the 300 V circuit terminals listed below:
   - T18 battery charger terminal A X4 and A4 hybrid/EV battery pack A X5
   - T18 battery charger terminal B X4 and A4 hybrid/EV battery pack B X5

   If greater than the specified range, test the 300 V circuit for an open-cicuit/high resistance.
6. Test for infinite resistance between the 300 V circuit terminal A X4 and B X4.
   If less than the specified range, test the 300 V circuits for a short-circuit between the circuits.
7. If all circuits test normal, replace the T18 battery charger.

Repair Instructions

Perform the Diagnostic Repair Verification after completing the diagnostic procedure.

Control Module References for T18 battery charger replacement, programming and set-up

&#169© Copyright Chevrolet. All rights reserved

DTC P0D21, P0D23, P1EF0 or P1EF1

Diagnostic Instructions

- Perform the Diagnostic System Check - Vehicle prior to using this diagnostic procedure.
- Review Strategy Based Diagnosis for an overview of the diagnostic approach.
- Diagnostic Procedure Instructions provides an overview of each diagnostic category.

DTC Descriptors

DTC P0D21: Battery Charger Output Voltage Too Low

DTC P0D23: Battery Charger Output Shorted

DTC P1EF0: Battery Charger High-Voltage Converter 1 Output Power Regulation Performance

DTC P1EF1: Battery Charger High-Voltage Converter 2 Output Power Regulation Performance

Circuit/System Description

The hybrid/EV powertrain control module 2 and battery charger control module monitor the battery charger high-voltage output and current output and ensures it is in the proper range and there is not a resistive short in the charging bus.

Conditions for Running the DTC

P0D21

- The vehicle 12 V battery system voltage needs to be above 9 V.
- Battery charger in heating mode ONLY:
  - Multi-function contactor must be commanded Open.
  - Battery charging contactors must be commanded Closed.
  - Commanded high-voltage current must be greater than 0.5 A.

    - High-voltage battery heater duty cycle must be greater than 5%.
    - Drive motor battery charger cable must be connected and vehicle receiving power.
- All other battery charging modes:
    - Multi-function contactor and battery charging contactors must be commanded Closed.
    - Drive motor battery charger cable must be connected and vehicle receiving power.

P0D23

- The vehicle 12 V battery system voltage needs to be above 9 V.
- There can not be any high voltage or current sensor faults present.
- The battery charge system must be in the pre-charge state, and the multi-function contactor must be commanded Open.
- There can not be any high-voltage battery heating or cooling requests active.
- drive motor battery charger cable must be connected and vehicle receiving power.

P1EF0

- P0D53, P0D54, P0D4E, P0D4F, P1EEB or P1EEC should not be set.
- The vehicle 12 V battery system voltage needs to be above 9 V
- The vehicle is connected to a 120 V AC supply and the battery charger is converting power.

P1EF1

- P0D53, P0D54, P0D4E, P0D4F, P1EEB or P1EEC should not be set.
- The vehicle 12 V battery system voltage needs to be above 9 V
- The vehicle is connected to a 240 V AC supply and the battery charger is converting power.

Conditions for Setting the DTC

P0D21

Battery charger high-voltage output voltage is less than 150 V for about 1 second.

P0D23

The battery charger high-voltage output current exceeds 0.1 A for about 3 seconds.

P1EF0 or P1EF1

The battery charger actual high-voltage output voltage or current is not within the allowable tolerance compared with the commanded output voltage or current. This is measured internal to the battery charger.

Action Taken When the DTC Sets

P0D21

- DTC P0D21 is a type B DTC.
- Disables the high-voltage battery heating and/or charging.

P0D23, P1EF0, or P1EF1

- DTC P0D23 is a type A DTC.
- Disables the high-voltage battery charging.

Conditions for Clearing the DTC

P0D21

DTC P0D21 is a type B DTC.

P0D23, P1EF0, or P1EF1

DTC P0D23 is a type A DTC.

Diagnostic Aids

Low or unstable household voltage supply can cause this DTC to set. Verify with customer that domestic voltage was not fluctuating during charge attempt and that they are using a dedicated circuit. Voltage fluctuations can be indicated by intermittent red LEDs on the drive motor battery charger cable.

Reference Information

Schematic Reference

Plug-In Charging Schematics

Connector End View Reference

Component Connector End Views

Description and Operation

Plug-In Charging System Description and Operation

Electrical Information Reference

- Circuit Testing
- Connector Repairs
- Testing for Intermittent Conditions and Poor Connections
- Wiring Repairs

DTC Type Reference

Powertrain Diagnostic Trouble Code (DTC) Type Definitions

Scan Tool Reference

Control Module References for scan tool information

Special Tools

EL-48900 HEV Safety Kit

For equivalent regional tools, refer to Special Tools .

Circuit/System Testing

Danger: Always perform the High-Voltage Disabling procedure prior to servicing any High Voltage component or connection. Personal Protection Equipment (PPE) and proper procedures must be followed.

The High-Voltage Disabling procedure will perform the following tasks:

- Identify how to disable high voltage.
- Identify how to test for the presence of high voltage.
- Identify conditions under which high voltage is always present and personal protection equipment (PPE) and proper procedures must be followed.

Before working on any high-voltage system, be sure to wear the following Personal Protection Equipment:

- Safety goggles with appropriate side shields when within 15 metres (50 feet) of the vehicle, either indoors or outdoors.

- Certified and up-to-date Class "0" Insulation gloves rated at 1000 V with leather protectors.
  - Visually and functionally inspect the gloves before use.
  - Wear the Insulation gloves with leather protectors at all times when working with the high-voltage battery assembly, whether the system is energised or not.

Failure to follow the procedures exactly as written may result in serious injury or death.

1. Verify no battery-related DTCs are set.
   If any battery-related DTCs are set, refer to Diagnostic Trouble Code (DTC) List - Vehicle for hybrid battery diagnostics.
2. Clear DTC, connect the drive motor battery charger cable to vehicle and known good domestic supply voltage.
3. Verify DTC P0D21, P0D23, P1EF0 or P1EF1 is set.
   If DTC is not set, the vehicle owner will have to attempt charge at home again. If the vehicle will not charge, they will need electrical supply serviced.
4. Vehicle OFF, disable the high voltage at the A4 hybrid/EV battery pack and the T18 battery charger. Refer to High Voltage Disabling .
5. Disconnect the X4 connector at the T18 battery charger and at the X5 connector at the A4 hybrid/EV battery pack.
6. Test for infinite resistance between the 300 V circuit terminals listed below and earth:
   - Terminal A X4
   - Terminal B X4

   If less than the specified range, test the 300 V circuit for a short-circuit to earth.
7. Test for less than 10 Ω between the 300 V circuit terminals listed below:
   - T18 battery charger terminal A X4 and A4 hybrid/EV battery pack A X5
   - T18 battery charger terminal B X4 and A4 hybrid/EV battery pack B X5

   If greater than the specified range, test the 300 V circuit for an open-cicuit/high resistance.
8. Test for infinite resistance between the 300 V circuit terminal A X4 and B X4.
   If less than the specified range, test the 300 V circuits for a short-circuit between the circuits.
9. If all circuits test normal, replace the T18 battery charger.

Repair Instructions

Perform the Diagnostic Repair Verification after completing the diagnostic procedure.

Control Module References for battery charger control module replacement, programming and set-up

&#169© Copyright Chevrolet. All rights reserved

DTC P0D26

Diagnostic Instructions

- Perform the Diagnostic System Check - Vehicle prior to using this diagnostic procedure.
- Review Strategy Based Diagnosis for an overview of the diagnostic approach.
- Diagnostic Procedure Instructions provides an overview of each diagnostic category.

DTC Descriptor

DTC P0D26: Battery Charger System Precharge Time Too Long

Circuit/System Description

Before connecting the battery charger to the hybrid/EV battery pack it is necessary to raise the voltage level of the battery charger output to match the hybrid/EV battery pack voltage. This is called the precharge of the battery charger. During precharge the charging contactors are closed, but the multi-function contactor is open. Also the drive motor battery charger cable needs to be plugged into the hybrid battery charge receptacle and utility power needs to be enabled to the vehicle. The hybrid/EV powertrain control module 2 monitors the amount of time it takes to achieve the proper pre-charge voltage.

Conditions for Running the DTC

- The vehicle 12 V battery system voltage needs to be above 9 V.
- Battery charger must go from disconnected to connected.
- Drive motor battery charger cable must be connected and vehicle receiving power.
- The multi-function contactor must be commanded Open.

Conditions for Setting the DTC

The hybrid/EV powertrain control module 2 determines the battery charger does not reach its pre-charge voltage within about 10 seconds.

Action Taken When the DTC Sets

- DTC P0D26 is a type A DTC.
- Disables the high-voltage battery charging.

Conditions for Clearing the DTC

DTC P0D26 is a type A DTC.

Reference Information

Schematic Reference

Plug-In Charging Schematics

Connector End View Reference

Component Connector End Views

Description and Operation

Plug-In Charging System Description and Operation

Electrical Information Reference

- Circuit Testing
- Connector Repairs
- Testing for Intermittent Conditions and Poor Connections
- Wiring Repairs

DTC Type Reference

Powertrain Diagnostic Trouble Code (DTC) Type Definitions

Scan Tool Reference

Control Module References for scan tool information

Special Tools

EL-48900 HEV Safety Kit

For equivalent regional tools, refer to Special Tools .

Circuit/System Testing

Danger: Always perform the High-Voltage Disabling procedure prior to servicing any High Voltage component or connection. Personal Protection Equipment (PPE) and proper procedures must be followed.

The High-Voltage Disabling procedure will perform the following tasks:

- Identify how to disable high voltage.
- Identify how to test for the presence of high voltage.
- Identify conditions under which high voltage is always present and personal protection equipment (PPE) and proper procedures must be followed.

Before working on any high-voltage system, be sure to wear the following Personal Protection Equipment:

- Safety goggles with appropriate side shields when within 15 metres (50 feet) of the vehicle, either indoors or outdoors.
- Certified and up-to-date Class "0" Insulation gloves rated at 1000 V with leather protectors.
  - Visually and functionally inspect the gloves before use.
  - Wear the Insulation gloves with leather protectors at all times when working with the high-voltage battery assembly, whether the system is energised or not.

Failure to follow the procedures exactly as written may result in serious injury or death.

1. Verify DTC P1EC5 is not set.
   If DTC P1EC5 is set, refer to DTC P0AA1, P0AD9, P0ADD, P0AE2, P0AE4, P0D0A, P0D11, P1EBC-P1EBF, P1EC0 or P1EC3-P1EC5
2. Verify that no other battery charger DTCs are set.
   If any of the DTCs is set, diagnose first. Refer to Diagnostic Trouble Code (DTC) List - Vehicle .
3. If all circuits test normal, replace the T18 battery charger.

Repair Instructions

Perform the Diagnostic Repair Verification after completing the diagnostic procedure.

Control Module References T18 battery charger replacement, programming and set-up

&#169© Copyright Chevrolet. All rights reserved

DTC P0D2A

Diagnostic Instructions

- Perform the Diagnostic System Check - Vehicle prior to using this diagnostic procedure.
- Review Strategy Based Diagnosis for an overview of the diagnostic approach.
- Diagnostic Procedure Instructions provides an overview of each diagnostic category.

DTC Descriptor

DTC P0D2A: Battery Charger Input High Current

Circuit/System Description

The hybrid/EV powertrain control module 2 monitors the battery charger AC current and verifies that it does not exceed its normal limit.

Conditions for Running the DTC

- The vehicle 12 V battery system voltage needs to be above 9 V.
- There can not be any high voltage or current sensor faults present.
- Drive motor battery charger cable must be connected and vehicle receiving power.

Conditions for Setting the DTC

120 V AC Supply

Exceeds 13 A for about 1 second.

240 V AC Supply

Exceeds 17 A for about 1 second.

Action Taken When the DTC Sets

- DTC P0D2A is a type A DTC.
- Disables the high-voltage battery charging.

Conditions for Clearing the DTC

DTC P0D2A is a type A DTC.

Reference Information

Schematic Reference

Plug-In Charging Schematics

Connector End View Reference

Component Connector End Views

Description and Operation

Plug-In Charging System Description and Operation

Electrical Information Reference

- Circuit Testing
- Connector Repairs
- Testing for Intermittent Conditions and Poor Connections
- Wiring Repairs

DTC Type Reference

Powertrain Diagnostic Trouble Code (DTC) Type Definitions

Scan Tool Reference

Control Module References for scan tool information

Special Tools

EL-48900 HEV Safety Kit

For equivalent regional tools, refer to Special Tools .

Circuit/System Verification

Danger: Always perform the High-Voltage Disabling procedure prior to servicing any High Voltage component or connection. Personal Protection Equipment (PPE) and proper procedures must be followed.

The High-Voltage Disabling procedure will perform the following tasks:

- Identify how to disable high voltage.
- Identify how to test for the presence of high voltage.
- Identify conditions under which high voltage is always present and personal protection equipment (PPE) and proper procedures must be followed.

Before working on any high-voltage system, be sure to wear the following Personal Protection Equipment:

- Safety goggles with appropriate side shields when within 15 metres (50 feet) of the vehicle, either indoors or outdoors.
- Certified and up-to-date Class "0" Insulation gloves rated at 1000 V with leather protectors.
  - Visually and functionally inspect the gloves before use.
  - Wear the Insulation gloves with leather protectors at all times when working with the high-voltage battery assembly, whether the system is energised or not.

Failure to follow the procedures exactly as written may result in serious injury or death.

Verify DTC P0D2A is not set.

If DTC is set, disable the high voltage at the T18 battery charger. Refer to High Voltage Disabling . Replace the T18 battery charger.

Repair Instructions

Perform the Diagnostic Repair Verification after completing the diagnostic procedure.

Control Module References for battery charger replacement, programming and set-up

&#169© Copyright Chevrolet. All rights reserved

DTC P0D2B or P0D2C

Diagnostic Instructions

- Perform the Diagnostic System Check - Vehicle prior to using this diagnostic procedure.
- Review Strategy Based Diagnosis for an overview of the diagnostic approach.
- Diagnostic Procedure Instructions provides an overview of each diagnostic category.

DTC Descriptors

DTC P0D2B: Control Pilot Indicator Control Circuit

DTC P0D2C: Charge Status Indicator Control Circuit

Diagnostic Fault Information

Circuit	Short to Ground	Open/High Resistance	Short to Voltage	Signal Performance
Charge Pilot Indicator Contol	P0D2B	P0D2B	P0D2B	-
Charge Status Indicator Contol	P0D2C	1	P0D2C	-
Charge Complete Indicator Contol	1	1	1	--
Low Reference	--	P0D2C, P0D2B	--	--
1. Plug In Charging Indicator Malfunction				

Circuit/System Description

The status of charging events (including delays) is communicated to the user through a charge status indicator and audio tones. The battery state of charge indicator, located at the top middle of the instrument panel, will be permanently lit green when the vehicle is charging under automatic control. It will have a fast flash green if the charging is delayed and will begin later. It will have a slow flash green when charging is complete. A permanently lit yellow indicator means the vehicle is not able to accept a charge. And if there is no indicator lit, it means the electronic vehicle supply equipment is not working properly or is not connected.

Conditions for Running the DTC

Both conditions need to run for diagnostics to pass.

Condition 1

- The vehicle 12 V battery system voltage needs to be above 9 V.
- Vehicle in Service Mode.
- The drive motor battery charger cable is disconnected (LEDs commanded OFF).

Condition 2

- The vehicle 12 V battery system voltage needs to be above 9 V.
- Vehicle in Service Mode.
- The vehicle is connected to an AC supply and the battery charger is charging the vehicle (LEDs commanded ON).

Conditions for Setting the DTC

- LED Commanded OFF, the hybrid/EV powertrain control module 2 detects a short-circuit to battery for about 4 seconds.
- LED Commanded ON, the hybrid/EV powertrain control module 2 detects a short-circuit to earth or an open-circuit/high resistance for about 4 seconds.

Action Taken When the DTC Sets

DTC P0D2B and P0D2C are type B DTCs.

Conditions for Clearing the DTC

DTC P0D2B and P0D2C are type B DTCs.

Reference Information

Schematic Reference

Plug-In Charging Schematics

Connector End View Reference

Component Connector End Views

Description and Operation

Plug-In Charging System Description and Operation

Electrical Information Reference

- Circuit Testing
- Connector Repairs
- Testing for Intermittent Conditions and Poor Connections
- Wiring Repairs

DTC Type Reference

Powertrain Diagnostic Trouble Code (DTC) Type Definitions

Scan Tool Reference

Control Module References for scan tool information

Special Tools

EL-48900 HEV Safety Kit

For equivalent regional tools, refer to Special Tools .

Circuit/System Testing

Danger: Always perform the High-Voltage Disabling procedure prior to servicing any High Voltage component or connection. Personal Protection Equipment (PPE) and proper procedures must be followed.

The High-Voltage Disabling procedure will perform the following tasks:

- Identify how to disable high voltage.
- Identify how to test for the presence of high voltage.
- Identify conditions under which high voltage is always present and personal protection equipment (PPE) and proper procedures must be followed.

Before working on any high-voltage system, be sure to wear the following Personal Protection Equipment:

- Safety goggles with appropriate side shields when within 15 metres (50 feet) of the vehicle, either indoors or outdoors.
- Certified and up-to-date Class "0" Insulation gloves rated at 1000 V with leather protectors.
  - Visually and functionally inspect the gloves before use.
  - Wear the Insulation gloves with leather protectors at all times when working with the high-voltage battery assembly, whether the system is energised or not.

Failure to follow the procedures exactly as written may result in serious injury or death.

Danger: The Volt Battery Pack will utilise an exchange program. Please consult the most recent revision of bulletin/PI #PIP4841, available in Service Information (SI), for a list of approved Volt Battery Pack service procedures. Components that may be removed and serviced without exchanging the complete battery pack are identified in the bulletin/PI. Please contact the GM Technical Assistance Centre (1-877-446-8227) if you have any questions.

1. Vehicle OFF, disconnect the harness connector at the P36 battery state of charge indicator.
2. Test for less than 10 Ω between the low reference terminal C and earth.
   If greater than the specified range, test the low reference circuit for an open/high resistance. If the circuit tests normal, replace the K114B hybrid/EV powertrain control module 2.
3. Disconnect the drive motor battery charger cable for at least 10 seconds. Connect a test lamp between the signal terminal A and earth. Verify that the test lamp does not illuminate.
   If the test lamp does illuminate, test the signal circuit for a short-circuit to voltage. If the circuit tests normal, replace the K114B hybrid/EV powertrain control module 2.
4. While connecting the drive motor battery charger cable, verify that the test lamp illuminates in the first 5 seconds of connecting the drive motor battery charger cable
   If the test lamp does not illuminate, test the signal circuit for a short to ground or an open/high resistance. If the circuit tests normal, replace the K114B hybrid/EV powertrain control module 2.
5. Disconnect the drive motor battery charger cable for at least 10 seconds. Connect a test lamp between the signal terminal B and earth. Verify that the test lamp does not illuminate.
   If the test lamp does illuminate, test the signal circuit for a short-circuit to voltage. If the circuit tests normal, replace the K114B hybrid/EV powertrain control module 2.
6. While connecting the drive motor battery charger cable verify that the test lamp illuminates within 25 seconds of connecting the drive motor battery charger cable.
   If the test lamp does not illuminate, test the signal circuit for a short to ground or an open/high resistance. If the circuit tests normal, replace the K114B hybrid/EV powertrain control module 2.
7. If all circuits test normal, replace the P36 battery state of charge indicator.

Repair Instructions

Perform the Diagnostic Repair Verification after completing the diagnostic procedure.

Battery Charge Indicator Replacement

Control Module References for battery charger control module replacement, programming and set-up

&#169© Copyright Chevrolet. All rights reserved

DTC P0D39-P0D3B, P0D49, P0D4E-P0D54, P1ECB-P1ECD, P1ED0-P1ED9, P1EDB, P1EDC, P1EDE-P1EED or P1EFE-P1F02

Diagnostic Instructions

- Perform the Diagnostic System Check - Vehicle prior to using this diagnostic procedure.
- Review Strategy Based Diagnosis for an overview of the diagnostic approach.
- Diagnostic Procedure Instructions provides an overview of each diagnostic category.

DTC Descriptors

DTC P0D39: Battery Charger Input Current Sensor Circuit Range/Performance

DTC P0D3A: Battery Charger Input Current Sensor Circuit Low Voltage

DTC P0D3B: Battery Charger Input Current Sensor Circuit High Voltage

DTC P0D49: Battery Charger 14 V Output Current Sensor Circuit Low Voltage

DTC P0D4A: Battery Charger 14 V Converter Output Current Sensor Circuit High Voltage

DTC P0D4E: Battery Charger Hybrid/EV Battery Output Voltage Sensor Circuit Low Voltage

DTC P0D4F: Battery Charger Hybrid/EV Battery Output Voltage Sensor Circuit High Voltage

DTC P0D53: Battery Charger Hybrid/EV Battery Output Current Sensor Circuit Low Voltage

DTC P0D54: Charger Hybrid/EV Battery Output Current Sensor Circuit High Voltage

DTC P1ECB: Battery Charger High-Voltage Converter 1 Temperature Sensor Circuit Low Voltage

DTC P1ECC: Battery Charger High-Voltage Converter 1 Temperature Sensor Circuit High Voltage

DTC P1ECD: Battery Charger High-Voltage Converter 1 Temperature Sensor Circuit Performance

DTC P1ED0: Battery Charger High-Voltage Converter 2 Temperature Sensor Circuit Low Voltage

DTC P1ED1: Battery Charger High-Voltage Converter 2 Temperature Sensor Circuit High Voltage

DTC P1ED2: Battery Charger High-Voltage Converter 2 Temperature Sensor Circuit Performance

DTC P1ED6: Battery Charger Cold Plate Temperature Sensor Circuit Low Voltage

DTC P1ED7: Battery Charger Cold Plate Temperature Sensor Circuit High Voltage

DTC P1ED8: Battery Charger Cold Plate Temperature Sensor Performance

DTC P1ED9: Battery Charger Converter Input Voltage Sensor 1 Circuit Low Voltage

DTC P1EDB: Battery Charger Converter Input Voltage Sensor 1 Performance

DTC P1EDC: Battery Charger Converter Input Voltage Sensor 2 Circuit Low Voltage

DTC P1EDE: Battery Charger Converter Input Voltage Sensor 2 Performance

DTC P1EDF: Battery Charger Input Voltage Conditioner Temperature Sensor Circuit Low Voltage

DTC P1EE0: Battery Charger Input Voltage Conditioner Temperature Sensor Circuit High Voltage

DTC P1EE1: Battery Charger Input Voltage Conditioner Temperature Sensor Performance

DTC P1EE2: Battery Charger High Voltage Converter 1 Input Current Sensor Circuit Low Voltage

DTC P1EE3: Battery Charger High Voltage Converter 1 Input Current Sensor Circuit High Voltage

DTC P1EE4: Battery Charger High Voltage Converter 2 Input Current Sensor Circuit Low Voltage

DTC P1EE5: Battery Charger High Voltage Converter 2 Input Current Sensor Circuit High Voltage

DTC P1EE7: Battery Charger Control Module Reference Voltage 1 Circuit Low Voltage

DTC P1EE8: Battery Charger Control Module Reference Voltage 1 Circuit High Voltage

DTC P1EE9: Battery Charger Control Module Reference Voltage 2 Circuit Low Voltage

DTC P1EEA: Battery Charger Control Module Reference Voltage 2 Circuit High Voltage

DTC P1EEB: Battery Charger Control Module Reference Voltage 3 Circuit Low Voltage

DTC P1EEC: Battery Charger Control Module Reference Voltage 3 Circuit High Voltage

DTC P1EED: Battery Charger 14 V Output Voltage Sensing Circuit

DTC P1EFF: Battery Charger Input Power Up Protection Circuit Performance

DTC P1F01: Battery Charger Control Module Supply Voltage Sensor Circuit Low Voltage

DTC P1F02: Battery Charger Control Module Supply Voltage Sensor Circuit High Voltage

DTC P1F14: Battery Charger Input Current Sensor Exceeded Learning Limit

DTC P1F15: Battery Charger 14 V Output Current Sensor Exceeded Learning Limit

DTC P1F16: Battery Charger Hybrid/EV Battery Output Current Sensor Exceeded Learning Limit

Circuit/System Description

The battery charger will diagnose its own systems and determine when a fault condition is present. Diagnostics and system status is communicated from the battery charger to the hybrid/EV powertrain control module 2 through serial data. The hybrid/EV powertrain control module 2 is the host controller for DTC information.

The DTCs listed above for the battery charger are internal measurements that verify the charger is performing properly. The battery charger measures internal voltages, currents, and temperatures and verifies they are within the proper range.

Conditions for Running the DTC

These DTCs are internal faults of the battery charger. The vehicle needs to be connected to an AC supply and the battery charger is charging the vehicle.

Conditions for Setting the DTC

These DTCs are internal faults of the battery charger.

Action Taken When the DTC Sets

- DTC P0D39-P0D3B, P0D49-P0D54, P1ECB-P1ECD, P1ED0-P1ED9, P1ED9, P1EDB, P1EDC, P1EDE-P1EED or P1EFF-P1F02 are type A and B DTCs.

- Disables high-voltage battery charging.

Conditions for Clearing the DTC

DTC P0D39-P0D3B, P0D49-P0D54, P1ECB-P1ECD, P1ED0-P1ED9, P1ED9, P1EDB, P1EDC, P1EDE-P1EED or P1EFF-P1F02 are type A and B DTCs.

Reference Information

Schematic Reference

Plug-In Charging Schematics

Connector End View Reference

Component Connector End Views

Description and Operation

Plug-In Charging System Description and Operation

Electrical Information Reference

- Circuit Testing
- Connector Repairs
- Testing for Intermittent Conditions and Poor Connections
- Wiring Repairs

DTC Type Reference

Powertrain Diagnostic Trouble Code (DTC) Type Definitions

Scan Tool Reference

Control Module References for scan tool information

Special Tools

EL-48900 HEV Safety Kit

For equivalent regional tools, refer to Special Tools .

Circuit/System Verification

Danger: Always perform the High-Voltage Disabling procedure prior to servicing any High Voltage component or connection. Personal Protection Equipment (PPE) and proper procedures must be followed.

The High-Voltage Disabling procedure will perform the following tasks:

- Identify how to disable high voltage.
- Identify how to test for the presence of high voltage.
- Identify conditions under which high voltage is always present and personal protection equipment (PPE) and proper procedures must be followed.

Before working on any high-voltage system, be sure to wear the following Personal Protection Equipment:

- Safety goggles with appropriate side shields when within 15 metres (50 feet) of the vehicle, either indoors or outdoors.
- Certified and up-to-date Class "0" Insulation gloves rated at 1000 V with leather protectors.
  - Visually and functionally inspect the gloves before use.
  - Wear the Insulation gloves with leather protectors at all times when working with the high-voltage battery assembly, whether the system is energised or not.

Failure to follow the procedures exactly as written may result in serious injury or death.

Verify that DTC P0D39-P0D3B, P0D49-P0D54, P1ECB-P1ECD, P1ED0-P1ED9, P1ED9, P1EDB, P1EDC, P1EDE-P1EED or P1EFF-P1F02 is not set.

If DTC is set, disable the high voltage at the T18 battery charger. Refer to High Voltage Disabling . Replace the T18 battery charger.

Repair Instructions

Perform the Diagnostic Repair Verification after completing the diagnostic procedure.

Control Module References for battery charger replacement, programming and set-up

&#169© Copyright Chevrolet. All rights reserved

DTC P0D3E or P0D3F

Diagnostic Instructions

- Perform the Diagnostic System Check - Vehicle prior to using this diagnostic procedure.
- Review Strategy Based Diagnosis for an overview of the diagnostic approach.
- Diagnostic Procedure Instructions provides an overview of each diagnostic category.

DTC Descriptors

DTC P0D3E: Battery Charger Input Voltage Sensor Performance

DTC P0D3F: Battery Charger Input Voltage Sensor Circuit Low Voltage

Circuit/System Description

The battery charger will diagnose its own systems and determine when a fault condition is present. Diagnostics and system status is communicated from the battery charger to the hybrid/EV powertrain control module 2 through serial data. The hybrid/EV powertrain control module 2 is the host controller for DTC information.

The DTCs listed above for the battery charger are internal measurements that verify the charger is performing properly. The battery charger measures voltages, currents, and temperatures and verifies they are within the proper range.

Conditions for Running the DTC

The vehicle needs to be connected to an AC supply and the battery charger is charging the vehicle.

Conditions for Setting the DTC

The battery charger detects low (less than 85V) or unstable supply voltage during charging.

Action Taken When the DTC Sets

- DTC P0D3E and P0D3F are type A and B DTCs.

- Disables high-voltage battery charging.

Conditions for Clearing the DTC

DTC P0D3E and P0D3F are type A and B DTCs.

Diagnostic Aids

Charging the vehicle with a wet drive motor battery charger cable can cause this DTC to set. Verify that the customer did not attempt to charge vehicle in the rain or extremely wet environment.

Low or unstable household voltage supply can cause this DTC to set. Verify with customer that domestic voltage was not fluctuating during charge attempt and that they are using a dedicated circuit.

Reference Information

Schematic Reference

Plug-In Charging Schematics

Connector End View Reference

Component Connector End Views

Description and Operation

Plug-In Charging System Description and Operation

Electrical Information Reference

- Circuit Testing
- Connector Repairs
- Testing for Intermittent Conditions and Poor Connections
- Wiring Repairs

DTC Type Reference

Powertrain Diagnostic Trouble Code (DTC) Type Definitions

Scan Tool Reference

Control Module References for scan tool information

Special Tools

EL-48900 HEV Safety Kit

For equivalent regional tools, refer to Special Tools .

Circuit/System Testing

Danger: Always perform the High-Voltage Disabling procedure prior to servicing any High Voltage component or connection. Personal Protection Equipment (PPE) and proper procedures must be followed.

The High-Voltage Disabling procedure will perform the following tasks:

- Identify how to disable high voltage.
- Identify how to test for the presence of high voltage.
- Identify conditions under which high voltage is always present and personal protection equipment (PPE) and proper procedures must be followed.

Before working on any high-voltage system, be sure to wear the following Personal Protection Equipment:

- Safety goggles with appropriate side shields when within 15 metres (50 feet) of the vehicle, either indoors or outdoors.
- Certified and up-to-date Class "0" Insulation gloves rated at 1000 V with leather protectors.
  - Visually and functionally inspect the gloves before use.
  - Wear the Insulation gloves with leather protectors at all times when working with the high-voltage battery assembly, whether the system is energised or not.

Failure to follow the procedures exactly as written may result in serious injury or death.

1. Clear DTC, connect the drive motor battery charger cable to vehicle and known good domestic supply voltage.
2. Verify that DTC P0D3E or P0D3F is set.
   If DTC is not set, the vehicle owner will have to attempt charge at home again. If the vehicle will not charge, they will need electrical supply serviced.
3. Verify that drive motor battery charger cable LEDs are not flickering.
   If drive motor battery charger cable LEDs are flickering, replace drive motor battery charger cable.
4. Test for infinite resistance between the 110/220 V AC circuit terminals listed below and earth:
   - T18 battery charger terminal A X3
   - T18 battery charger terminal CX3

   If less than the specified range, test the 110/220 V AC circuit for a short to ground.
5. Test for less than 10 Ω between the 110/220 V AC circuit terminals listed below:
   - T18 battery charger terminal A X3 and X98 hybrid battery charger receptacle E

- T18 battery charger terminal C X3 and X98 hybrid battery charger receptacle A

  If greater than the specified range, test the 110/220 V AC circuit for an open-circuit/high resistance.

6. Test for infinite resistance between the 110/220 V AC circuit at the T18 battery charger terminal A X3 and C X3.
   If less than the specified range, test the 110/220 V AC circuits for a short-circuit between the circuits.
7. If all circuits test normal, replace the T18 battery charger.

Repair Instructions

Perform the Diagnostic Repair Verification after completing the diagnostic procedure.

Control Module References for T18 battery charger replacement, programming and set-up

&#169© Copyright Chevrolet. All rights reserved

DTC P0D40, P1EDA, P1EDD or P1F03-P1F05

Diagnostic Instructions

- Perform the Diagnostic System Check - Vehicle prior to using this diagnostic procedure.
- Review Strategy Based Diagnosis for an overview of the diagnostic approach.
- Diagnostic Procedure Instructions provides an overview of each diagnostic category.

DTC Descriptors

DTC P0D40: Battery Charger Input Voltage Sensor Circuit High Voltage

DTC P1EDA: Battery Charger Converter Input Voltage Sensor 1 Circuit High Voltage

DTC P1EDD: Battery Charger Converter Input Voltage Sensor 2 Circuit High Voltage

DTC P1F03: Battery Charger Control Module Supply Voltage Performance

Circuit/System Description

The battery charger contains several internal sensor diagnostics that require the vehicle AC supply to be in the proper range. These diagnostics are internal battery charger diagnostics, but need the correct AC voltage to run properly.

Conditions for Running the DTC

- The vehicle 12 V battery system voltage needs to be above 9 V.
- The vehicle is connected to an AC supply.

Conditions for Setting the DTC

P0D40

The vehicle AC volt supply is greater 422 V AC.

P1EDA and P1EDD

The battery charger internal bulk voltage is greater than about 464 V DC. This is an internal measurement to the battery charger.

P1F03

The battery charger detects internal PBIAS voltage is greater than about 15 V DC. This is an internal measurement to the battery charger.

Action Taken When the DTC Sets

- DTC P0D40, P1EDA, P1EDD or P1F03-P1F05 are type A DTCs.
- Disables the vehicle high-voltage battery charging.

Conditions for Clearing the DTC

DTC P0D40, P1EDA, P1EDD or P1F03-P1F05 are type A DTCs.

Reference Information

Schematic Reference

Plug-In Charging Schematics

Connector End View Reference

Component Connector End Views

Description and Operation

Plug-In Charging System Description and Operation

Electrical Information Reference

- Circuit Testing
- Connector Repairs
- Testing for Intermittent Conditions and Poor Connections
- Wiring Repairs

DTC Type Reference

Powertrain Diagnostic Trouble Code (DTC) Type Definitions

Scan Tool Reference

Control Module References for scan tool information

Special Tools

EL-48900 HEV Safety Kit

For equivalent regional tools, refer to Special Tools .

Circuit/System Testing

Danger: Always perform the High-Voltage Disabling procedure prior to servicing any High Voltage component or connection. Personal Protection Equipment (PPE) and proper procedures must be followed.

The High-Voltage Disabling procedure will perform the following tasks:

- Identify how to disable high voltage.
- Identify how to test for the presence of high voltage.
- Identify conditions under which high voltage is always present and personal protection equipment (PPE) and proper procedures must be followed.

Before working on any high-voltage system, be sure to wear the following Personal Protection Equipment:

- Safety goggles with appropriate side shields when within 15 metres (50 feet) of the vehicle, either indoors or outdoors.
- Certified and up-to-date Class "0" Insulation gloves rated at 1000 V with leather protectors.
  - Visually and functionally inspect the gloves before use.
  - Wear the Insulation gloves with leather protectors at all times when working with the high-voltage battery assembly, whether the system is energised or not.

Failure to follow the procedures exactly as written may result in serious injury or death.

1. Clear DTC, connect the drive motor battery charger cable.
2. Verify DTC P0D2A is set.
   If DTC is not set, the vehicle owner will have to attempt charge at home again. If the vehicle will not charge, they will need electrical supply serviced.
3. If the DTC is set, Vehicle OFF, disable the high voltage at the T18 battery charger. Refer to High Voltage Disabling . Replace the T18 battery charger.

Repair Instructions

Perform the Diagnostic Repair Verification after completing the diagnostic procedure.

Control Module References for battery charger replacement, programming and set-up

&#169© Copyright Chevrolet. All rights reserved

DTC P0D43-P0D45

Diagnostic Instructions

- Perform the Diagnostic System Check - Vehicle prior to using this diagnostic procedure.
- Review Strategy Based Diagnosis for an overview of the diagnostic approach.
- Diagnostic Procedure Instructions provides an overview of each diagnostic category.

DTC Descriptors

DTC P0D43: Battery Charger 14 V Output Voltage Sensor Performance

DTC P0D44: Battery Charger 14 V Output Voltage Sensor Circuit Low Voltage

DTC P0D45: Battery Charger 14 V Output Voltage Sensor Circuit High Voltage

Circuit/System Description

The battery charger will diagnose its own systems and determine when a fault condition is present. Diagnostics and system status is communicated from the battery charger to the hybrid/EV powertrain control module 2 through serial data. The hybrid/EV powertrain control module 2 is the host controller for DTC information.

The battery charger takes internal measurements that verify the charger is performing properly. The battery charger measures internal voltages, currents, and temperatures and verifies they are within the proper range.

Conditions for Running the DTC

The vehicle needs to be connected to an AC supply and the battery charger is charging the vehicle.

Conditions for Setting the DTC

The battery charger output voltage is outside expected range.

Action Taken When the DTC Sets

- DTC P0D43-P0D44 are type A DTCs.
- Disables high-voltage battery charging.

Conditions for Clearing the DTC

DTC P0D43-P0D44 are type A DTCs.

Diagnostic Aids

External battery chargers can cause this DTC to set. Ensure customer did not have an external battery charger connected to vehicle during plug-in charging attempt.

Reference Information

Schematic Reference

Plug-In Charging Schematics

Connector End View Reference

Component Connector End Views

Description and Operation

Plug-In Charging System Description and Operation

Electrical Information Reference

- Circuit Testing
- Connector Repairs
- Testing for Intermittent Conditions and Poor Connections
- Wiring Repairs

DTC Type Reference

Powertrain Diagnostic Trouble Code (DTC) Type Definitions

Scan Tool Reference

Control Module References for scan tool information

Special Tools

EL-48900 HEV Safety Kit

For equivalent regional tools, refer to Special Tools .

Circuit/System Testing

Danger: Always perform the High-Voltage Disabling procedure prior to servicing any High Voltage component or connection. Personal Protection Equipment (PPE) and proper procedures must be followed.

The High-Voltage Disabling procedure will perform the following tasks:

- Identify how to disable high voltage.
- Identify how to test for the presence of high voltage.
- Identify conditions under which high voltage is always present and personal protection equipment (PPE) and proper procedures must be followed.

Before working on any high-voltage system, be sure to wear the following Personal Protection Equipment:

- Safety goggles with appropriate side shields when within 15 metres (50 feet) of the vehicle, either indoors or outdoors.
- Certified and up-to-date Class "0" Insulation gloves rated at 1000 V with leather protectors.
  - Visually and functionally inspect the gloves before use.
  - Wear the Insulation gloves with leather protectors at all times when working with the high-voltage battery assembly, whether the system is energised or not.

Failure to follow the procedures exactly as written may result in serious injury or death.

1. Vehicle OFF, disable the high voltage at the T18 battery charger. Refer to High Voltage Disabling . Disconnect the X1 harness connector at the T18 battery charger.
2. Vehicle ON, test for B+ between the IGN circuit terminal A and earth.
   If less than the specified range, test the B+ circuit for a short to ground or an open/high resistance.
3. If all circuits test normal, replace the T18 battery charger.

Repair Instructions

Perform the Diagnostic Repair Verification after completing the diagnostic procedure.

Control Module References for battery charger replacement, programming and set-up

&#169© Copyright Chevrolet. All rights reserved

DTC P0D58 or P0D59

Diagnostic Instructions

- Perform the Diagnostic System Check - Vehicle prior to using this diagnostic procedure.
- Review Strategy Based Diagnosis for an overview of the diagnostic approach.
- Diagnostic Procedure Instructions provides an overview of each diagnostic category.

DTC Descriptors

DTC P0D58: Proximity Detection Circuit Low Voltage

DTC P0D59: Proximity Detection Circuit High Voltage

Diagnostic Fault Information

Circuit	Short to Ground	Open/High Resistance	Short to Voltage	Signal Performance
AC Voltage Line 1	P1EE6	P1EE6	--	--
AC Voltage Line 2	P1EE6	P1EE6	--	--
AC Voltage Earth	1	P0D59	1	--
Control Pilot Signal	1	1	1	--
Proximity Signal	P0D58	P0D59	P0D59	-
1. Plug In Charging Indicator Malfunction				

Circuit/System Description

This diagnostic runs with the drive motor battery charger cable disconnected to verify the vehicle side circuit integrity. The hybrid/EV powertrain control module 2 uses a 5 V regulated signal through a 2,700 Ω resistor to a low reference circuit in the battery charger to detect if the drive motor battery charger cable is attached.

Conditions for Running the DTC

- The vehicle 12 V battery system voltage needs to be above 9 V.
- The charge port door is closed.
- Vehicle in Service Mode.
- No charge port door DTCs are set.

  Or
- The vehicle 12 V battery system voltage needs to be above 9 V.
- The vehicle needs to be driven above 20 kph (15 mph) for more than 10 seconds.
- No vehicle speed DTCs are set.

Conditions for Setting the DTC

DTC P0D58

The hybrid/EV powertrain control module 2 measures a voltage less than 4.2 V for 1 second.

DTC P0D59

The hybrid/EV powertrain control module 2 measures a voltage greater than 4.8 V for 1 second.

Action Taken When the DTC Sets

- DTCs P0D58 and P0D59 are type A DTCs.
- Disable the high-voltage battery charging.

Conditions for Clearing the DTC

DTCs P0D58 and P0D59 are type A DTCs.

Reference Information

Schematic Reference

Plug-In Charging Schematics

Connector End View Reference

Component Connector End Views

Description and Operation

Plug-In Charging System Description and Operation

Electrical Information Reference

- Circuit Testing
- Connector Repairs
- Testing for Intermittent Conditions and Poor Connections
- Wiring Repairs

DTC Type Reference

Powertrain Diagnostic Trouble Code (DTC) Type Definitions

Scan Tool Reference

Control Module References for scan tool information

Special Tools

EL-48900 HEV Safety Kit

For equivalent regional tools, refer to Special Tools .

Circuit/System Testing

Danger: Always perform the High-Voltage Disabling procedure prior to servicing any High Voltage component or connection. Personal Protection Equipment (PPE) and proper procedures must be followed.

The High-Voltage Disabling procedure will perform the following tasks:

- Identify how to disable high voltage.
- Identify how to test for the presence of high voltage.
- Identify conditions under which high voltage is always present and personal protection equipment (PPE) and proper procedures must be followed.

Before working on any high-voltage system, be sure to wear the following Personal Protection Equipment:

- Safety goggles with appropriate side shields when within 15 metres (50 feet) of the vehicle, either indoors or outdoors.
- Certified and up-to-date Class "0" Insulation gloves rated at 1000 V with leather protectors.

- Visually and functionally inspect the gloves before use.
- Wear the Insulation gloves with leather protectors at all times when working with the high-voltage battery assembly, whether the system is energised or not.

Failure to follow the procedures exactly as written may result in serious injury or death.

1. Vehicle OFF, disable the high voltage at the T18 battery charger. Refer to High Voltage Disabling . Disconnect the drive motor battery charger cable. Disconnect the harness connector at the X98 hybrid battery charger receptacle.
2. Test for less than 10 Ω between the low reference circuit terminal C and ground.
   If greater than the specified range, test the low reference circuit for an open/high resistance. If the circuit tests normal, replace the T18 battery charger.
3. Test for 4.5-5.5 V between the signal circuit terminal D and earth.
   If less than the specified range, test the signal circuit for a short to ground or an open/high resistance. If the circuit tests normal, replace the K114B hybrid/EV powertrain control module 2.
   If greater than the specified range, test the signal circuit for a short to voltage. If the circuit tests normal, replace the K114B hybrid/EV powertrain control module 2.
4. If all circuits test normal, replace the X98 hybrid battery charger receptacle.

Repair Instructions

Perform the Diagnostic Repair Verification after completing the diagnostic procedure.

- Drive Motor Battery Charger Receptacle Replacement
- Control Module References for on board charging module or hybrid/EV powertrain control module 2 replacement, programming and set-up

&#169© Copyright Chevrolet. All rights reserved

DTC P0D5B, P0D5C, P1ECE or P1EFD

Diagnostic Instructions

- Perform the Diagnostic System Check - Vehicle prior to using this diagnostic procedure.
- Review Strategy Based Diagnosis for an overview of the diagnostic approach.
- Diagnostic Procedure Instructions provides an overview of each diagnostic category.

DTC Descriptors

DTC P0D5B: Battery Charger 14 V Output Power Performance

DTC P0D5C: Battery Charger Hybrid/EV Battery Output Power Performance

DTC P1ECE: Battery Charger Total Output Power Performance

DTC P1EFD: Battery Charger Power Efficiency

Circuit/System Description

The battery charger will diagnose its own systems and determine when a fault condition is present. Diagnostics and system status is communicated from the battery charger to the hybrid/EV powertrain control module 2 through serial data. The hybrid/EV powertrain control module 2 is the host controller for DTC information.

Conditions for Running the DTC

P0D5B, P0D5C, P1ECE and P1EFD

- The vehicle 12 V battery system voltage needs to be above 9 V.
- The vehicle is connected to an AC supply and the battery charger is charging.
- No out of range DTCs are present on any of the battery charger current or voltage sensors.

P1EFD

The battery charger needs to be charging at a minimum of 3 A high-voltage DC current.

Conditions for Setting the DTC

The battery charger calculates a power output not within the proper range for 2 seconds.

Action Taken When the DTC Sets

- DTC P0D5B, P0D5C and P1ECE are type A DTCs.
- DTC P1EFD is a type B DTC.
- Disables the high-voltage battery charging.

Conditions for Clearing the DTC

- DTC P0D5B, P0D5C and P1ECE are type A DTCs.
- DTC P1EFD is a type B DTC.

Diagnostic Aids

A possible cause of this DTC could be a faulty 14 V power module.

Reference Information

Schematic Reference

Plug-In Charging Schematics

Connector End View Reference

Component Connector End Views

Description and Operation

Plug-In Charging System Description and Operation

Electrical Information Reference

- Circuit Testing

- Connector Repairs
- Testing for Intermittent Conditions and Poor Connections
- Wiring Repairs

DTC Type Reference

Powertrain Diagnostic Trouble Code (DTC) Type Definitions

Scan Tool Reference

Control Module References for scan tool information

Special Tools

EL-48900 HEV Safety Kit

For equivalent regional tools, refer to Special Tools .

Circuit/System Testing

Danger: Always perform the High-Voltage Disabling procedure prior to servicing any High Voltage component or connection. Personal Protection Equipment (PPE) and proper procedures must be followed.

The High-Voltage Disabling procedure will perform the following tasks:

- Identify how to disable high voltage.
- Identify how to test for the presence of high voltage.
- Identify conditions under which high voltage is always present and personal protection equipment (PPE) and proper procedures must be followed.

Before working on any high-voltage system, be sure to wear the following Personal Protection Equipment:

- Safety goggles with appropriate side shields when within 15 metres (50 feet) of the vehicle, either indoors or outdoors.
- Certified and up-to-date Class "0" Insulation gloves rated at 1000 V with leather protectors.
  - Visually and functionally inspect the gloves before use.
  - Wear the Insulation gloves with leather protectors at all times when working with the high-voltage battery assembly, whether the system is energised or not.

Failure to follow the procedures exactly as written may result in serious injury or death.

1. Verify that no other battery charger DTCs are set.
   If any other battery charger DTCs are set. Refer to Diagnostic Trouble Code (DTC) List - Vehicle
2. Vehicle OFF, measure and record the 12 V battery voltage at the battery terminals. The battery voltage should stabilise between 12.4-12.8 V within a few minutes of

turning the Vehicle OFF.
If not within the specified range, refer to Battery Inspection/Test .

3. Vehicle in Service Mode, accessories OFF, measure and record the 12 V battery voltage at the battery terminals. The voltage should be at least 1 V greater than the voltage measured in step 1 but less than 15 V.
If not within the specified range, refer to DC Power Conversion Test .
4. Vehicle OFF, disable the high voltage at the T18 battery charger. Refer to High Voltage Disabling . Replace the T18 battery charger.

Repair Instructions

Perform the Diagnostic Repair Verification after completing the diagnostic procedure.

Control Module References for battery charger replacement, programming and set-up

&#169© Copyright Chevrolet. All rights reserved

DTC P0D5E

Diagnostic Instructions

- Perform the Diagnostic System Check - Vehicle prior to using this diagnostic procedure.
- Review Strategy Based Diagnosis for an overview of the diagnostic approach.
- Diagnostic Procedure Instructions provides an overview of each diagnostic category.

DTC Descriptor

DTC P0D5E: Battery Charger System High Voltage Present

Circuit/System Description

The battery charger will diagnose its own systems and determine when a fault condition is present. Diagnostics and system status is communicated from the battery charger to the hybrid/EV powertrain control module 2 through serial data. The hybrid/EV powertrain control module 2 is the host controller for DTC information.

Conditions for Running the DTC

Condition 1

The battery charger receives a discharge command from the hybrid/EV powertrain control module 2.

OR

Condition 2

The battery charger loses communication with the hybrid/EV powertrain control module 2.

Conditions for Setting the DTC

Condition 1

The battery charger control module measures a high voltage charging bus voltage greater than 60 V 1.5 seconds after receiving the discharge command from the hybrid/EV powertrain control module 2.

OR

Condition 2

The battery charger control module measures a high voltage charging bus voltage greater than 60 V 5 seconds after losing communication with the hybrid/EV powertrain control module 2.

Action Taken When the DTC Sets

DTC P0D5E is a type A DTC.

Conditions for Clearing the DTC

DTC P0D5E is a type A DTC.

Reference Information

Schematic Reference

Plug-In Charging Schematics

Connector End View Reference

Component Connector End Views

Description and Operation

Plug-In Charging System Description and Operation

Electrical Information Reference

- Circuit Testing
- Connector Repairs
- Testing for Intermittent Conditions and Poor Connections
- Wiring Repairs

DTC Type Reference

Powertrain Diagnostic Trouble Code (DTC) Type Definitions

Scan Tool Reference

Control Module References for scan tool information

Special Tools

EL-48900 HEV Safety Kit

For equivalent regional tools, refer to Special Tools .

Circuit/System Testing

Danger: Always perform the High-Voltage Disabling procedure prior to servicing any High Voltage component or connection. Personal Protection Equipment (PPE) and proper procedures must be followed.

The High-Voltage Disabling procedure will perform the following tasks:

- Identify how to disable high voltage.
- Identify how to test for the presence of high voltage.
- Identify conditions under which high voltage is always present and personal protection equipment (PPE) and proper procedures must be followed.

Before working on any high-voltage system, be sure to wear the following Personal Protection Equipment:

- Safety goggles with appropriate side shields when within 15 metres (50 feet) of the vehicle, either indoors or outdoors.
- Certified and up-to-date Class "0" Insulation gloves rated at 1000 V with leather protectors.
  - Visually and functionally inspect the gloves before use.
  - Wear the Insulation gloves with leather protectors at all times when working with the high-voltage battery assembly, whether the system is energised or not.

Failure to follow the procedures exactly as written may result in serious injury or death.

Danger: The Volt Battery Pack will utilise an exchange program. Please consult the most recent revision of bulletin/PI #PIP4841, available in Service Information (SI), for a list of approved Volt Battery Pack service procedures. Components that may be removed and serviced without exchanging the complete battery pack are identified in the bulletin/PI. Please contact the GM Technical Assistance Centre (1-877-446-8227) if you have any questions.

1. Verify that DTC P0AA1, P0AD9, P0ADD, P0AE2, P0AE4, P0D0A, P0D11, P1EBC-P1EBF, P1EC0 or P1EC3-P1EC5 is not set.
   If the DTC is set, refer to DTC P0AA1, P0AD9, P0ADD, P0AE2, P0AE4, P0D0A, P0D11, P1EBC-P1EBF, P1EC0 or P1EC3-P1EC5

   Note: The A4 hybrid/EV battery pack must not be at full charge to perform next test step.

2. Connect the drive motor battery charger cable. Vehicle ON, with a scan tool verify that the Battery Charger High Output parameter drops below 60 V after disconnecting the drive motor battery charger cable
   If not the specified range, disable the high voltage at the A4 hybrid/EV battery pack, refer to High Voltage Disabling . Replace the A4 hybrid/EV battery pack.
3. Disable the high voltage at the T18 battery charger, refer to High Voltage Disabling . Replace the T18 battery charger.

Repair Instructions

Perform the Diagnostic Repair Verification after completing the diagnostic procedure.

Control Module References for battery charger and hybrid/EV battery pack replacement , programming and set-up

&#169© Copyright Chevrolet. All rights reserved

DTC P1EE6

Diagnostic Instructions

- Perform the Diagnostic System Check - Vehicle prior to using this diagnostic procedure.
- Review Strategy Based Diagnosis for an overview of the diagnostic approach.
- Diagnostic Procedure Instructions provides an overview of each diagnostic category.

DTC Descriptors

DTC P1EE6: Battery Charger AC Not Present

Diagnostic Fault Information

Circuit	Short to Ground	Open/High Resistance	Short to Voltage	Signal Performance
AC Voltage Line 1	P1EE6	P1EE6	--	--
AC Voltage Line 2	P1EE6	P1EE6	--	--
AC Voltage Earth	1	P0D59	1	--
Control Pilot Signal	1	1	1	--
Proximity Signal	P0D58	P0D59	P0D59	-
1. Plug In Charging Indicator Malfunction				

Circuit/System Description

The hybrid battery charger receptacle is connected to the battery charger through two 110/220 V AC circuits and one earth circuit. The battery charger receives a serial data message from the hybrid powertrain control module 2 that the drive motor battery charger cable has been connected and then monitors the two 110/220 V AC circuits for proper voltage.

Conditions for Running the DTC

- The vehicle 12 V battery system voltage needs to be above 9 V.

- The drive motor battery charger cable is connected.
- The diagnostics for P0D3F, P0D40, P1EE7, P1EE8, P0D3E, P1ECE, P0D5C, P0D5B, P16C4 and P1EFD must have passed.

Conditions for Setting the DTC

The battery Charger AC input Voltage is below 5 V.

Action Taken When the DTC Sets

- DTC P1EE6 is a type A DTC.
- Disables the vehicle high-voltage battery charging.

Conditions for Clearing the DTC

DTC P1EE6 is a type A DTC.

Reference Information

Schematic Reference

Plug-In Charging Schematics

Connector End View Reference

Component Connector End Views

Description and Operation

Plug-In Charging System Description and Operation

Electrical Information Reference

- Circuit Testing
- Connector Repairs
- Testing for Intermittent Conditions and Poor Connections
- Wiring Repairs

DTC Type Reference

Powertrain Diagnostic Trouble Code (DTC) Type Definitions

Scan Tool Reference

Control Module References for scan tool information

Special Tools

EL-48900 HEV Safety Kit

For equivalent regional tools, refer to Special Tools .

Circuit/System Testing

Danger: Always perform the High-Voltage Disabling procedure prior to servicing any High Voltage component or connection. Personal Protection Equipment (PPE) and proper procedures must be followed.

The High-Voltage Disabling procedure will perform the following tasks:

- Identify how to disable high voltage.
- Identify how to test for the presence of high voltage.
- Identify conditions under which high voltage is always present and personal protection equipment (PPE) and proper procedures must be followed.

Before working on any high-voltage system, be sure to wear the following Personal Protection Equipment:

- Safety goggles with appropriate side shields when within 15 metres (50 feet) of the vehicle, either indoors or outdoors.
- Certified and up-to-date Class "0" Insulation gloves rated at 1000 V with leather protectors.
  - Visually and functionally inspect the gloves before use.
  - Wear the Insulation gloves with leather protectors at all times when working with the high-voltage battery assembly, whether the system is energised or not.

Failure to follow the procedures exactly as written may result in serious injury or death.

1. Vehicle OFF, disable the high voltage at the T18 battery charger. Refer to High Voltage Disabling .
2. Disconnect the X3 harness connector at the T18 battery charger and harness connector at the X98 hybrid battery charger receptacle.
3. Test for infinite resistance between the 110/220 V AC circuit terminals listed below and earth:
   - T18 battery charger terminal A X3
   - T18 battery charger terminal CX3

   If less than the specified range, test the 110/220 V AC circuit for a short to ground.
4. Test for less than 10 Ω between the 110/220 V AC circuit terminals listed below:
   - T18 battery charger terminal A X3 and X98 hybrid battery charger receptacle E
   - T18 battery charger terminal C X3 and X98 hybrid battery charger receptacle A

If greater than the specified range, test the 110/220 V AC circuit for an open-circuit/high resistance.

5. Test for infinite resistance between the 110/220 V AC circuit at the T18 battery charger terminal A X3 and C X3.
   If less than the specified range, test the 110/220 V AC circuits for a short-circuit between the circuits.
6. If all circuits tests normal, replace X98 hybrid battery charger receptacle. If the DTC resets, replace the T18 battery charger.

Repair Instructions

Perform the Diagnostic Repair Verification after completing the diagnostic procedure.

- Drive Motor Battery Charger Receptacle Replacement
- Control Module References for T18 battery charger replacement, programming and set-up

&#169© Copyright Chevrolet. All rights reserved

DTC P1EEF or P1EFE

Diagnostic Instructions

- Perform the Diagnostic System Check - Vehicle prior to using this diagnostic procedure.
- Review Strategy Based Diagnosis for an overview of the diagnostic approach.
- Diagnostic Procedure Instructions provides an overview of each diagnostic category.

DTC Descriptors

DTC P1EEF: Battery Charger 14 V Converter Output Power Regulation Performance

DTC P1EFE: Battery Charger Reverse Polarity Protection Circuit Performance

Circuit/System Description

The battery charger 14 V output circuit is connected to the vehicle 12 V system. The battery charger monitors the 14 V output for proper current and voltage conditions. The battery charger has the ability to drive the voltage to 14 V.

Conditions for Running the DTC

P1EEF

- The vehicle 12 V battery system voltage needs to be above 9 V.
- P0D44, P0D45, P0D49, P0D4A, P1EE9 or P1EEA should not be set.
- The vehicle is connected to an AC supply and the battery charger is charging.

P1EFE

- The vehicle 12 V battery system voltage needs to be above 9 V.
- Vehicle in Service Mode or the vehicle is connected to an AC supply.

Conditions for Setting the DTC

P1EEF

The battery charger actual 14 V output voltage or current is out of the allowable tolerance compared with the commanded output voltage or current. This is measured internal to the battery charger.

P1EFE

The battery charger 14 V reverse polarity protection relay state does not match the commanded state. This internal to the battery charger.

Action Taken When the DTC Sets

- DTC P1EEF and P1EFE are type A DTCs.
- Disables the high-voltage battery charging.

Conditions for Clearing the DTC

DTC P1EEE, P1EEF and P1EFE are type A DTCs.

Diagnostic Aids

Connecting an external battery charger to vehicle while charging with drive motor battery charger cable can cause this DTC to set. Ensure customer did not have an external battery charger connected during plug-in charging attempt before proceeding with this diagnostic procedure

Reference Information

Schematic Reference

Plug-In Charging Schematics

Connector End View Reference

Component Connector End Views

Description and Operation

Plug-In Charging System Description and Operation

Electrical Information Reference

- Circuit Testing
- Connector Repairs
- Testing for Intermittent Conditions and Poor Connections
- Wiring Repairs

DTC Type Reference

Powertrain Diagnostic Trouble Code (DTC) Type Definitions

Scan Tool Reference

Control Module References for scan tool information

Special Tools

EL-48900 HEV Safety Kit

For equivalent regional tools, refer to Special Tools .

Circuit/System Testing

Danger: Always perform the High-Voltage Disabling procedure prior to servicing any High Voltage component or connection. Personal Protection Equipment (PPE) and proper procedures must be followed.

The High-Voltage Disabling procedure will perform the following tasks:

- Identify how to disable high voltage.
- Identify how to test for the presence of high voltage.
- Identify conditions under which high voltage is always present and personal protection equipment (PPE) and proper procedures must be followed.

Before working on any high-voltage system, be sure to wear the following Personal Protection Equipment:

- Safety goggles with appropriate side shields when within 15 metres (50 feet) of the vehicle, either indoors or outdoors.
- Certified and up-to-date Class "0" Insulation gloves rated at 1000 V with leather protectors.
  - Visually and functionally inspect the gloves before use.
  - Wear the Insulation gloves with leather protectors at all times when working with the high-voltage battery assembly, whether the system is energised or not.

Failure to follow the procedures exactly as written may result in serious injury or death.

1. Verify DTC P0D44, P0D45, P0D49, P0D4A, P1EE9 or P1EEA is not set.
   If any of the DTCs are set, refer to Diagnostic Trouble Code (DTC) List - Vehicle .
2. Vehicle OFF, measure and record the battery voltage at the battery terminals. The battery voltage should stabilise between 12.4-12.8 V within a few minutes of turning the Vehicle OFF.
   If not within the specified range, refer to Battery Inspection/Test .
3. Vehicle OFF, disable the high voltage at the T18 battery charger. Refer to High Voltage Disabling . Disconnect the X2 harness connector at the T18 battery charger.
4. Test for less than 10 Ω between the ground circuit terminal 1 and ground.
   If greater than the specified range, test the ground circuit for an open/high resistance.
5. Test for B+ between the B+ circuit terminal 2 and earth.
   If less than the specified range, test the B+ circuit for a short to ground or an open/high resistance.
6. If all circuits test normal, replace the T18 battery charger.

Repair Instructions

Perform the Diagnostic Repair Verification after completing the diagnostic procedure.

Control Module References for battery charger replacement, programming and set-up

&#169© Copyright Chevrolet. All rights reserved

DTC P1EF3-P1EF5

Diagnostic Instructions

- Perform the Diagnostic System Check - Vehicle prior to using this diagnostic procedure.
- Review Strategy Based Diagnosis for an overview of the diagnostic approach.
- Diagnostic Procedure Instructions provides an overview of each diagnostic category.

DTC Descriptors

DTC P1EF3: Battery Charger High-Voltage Converter 1 Temperature Too High

DTC P1EF4: Battery Charger High Voltage Converter 2 Temperature Too High

DTC P1EF5: Battery Charger Input Voltage Conditioner Temperature Too High

Circuit/System Description

The battery charger uses a liquid cooled cooling system which is cooled from the front of the vehicle. The hybrid electronic cooling system needs to be functioning properly for the battery charger to be able to meet its temperature requirements.

The hybrid/EV powertrain control module 2 monitors the battery charger temperature and verifies it is within its proper operating range. There is a temperature sensor that measures the overall temperature of the battery charger. Also, there are battery charger internal temperatures sensors that monitor for over-temperature conditions, that are for the voltage converter 1, voltage converter 2 and the voltage conditioner within the battery charger.

Conditions for Running the DTC

- The vehicle 12 V battery system voltage needs to be above 9 V.
- The vehicle is connected to an AC supply and the battery charger is charging.

Conditions for Setting the DTC

The battery charger voltage converter 1, voltage converter 2 or voltage conditioner temperature sensors measures a temperature greater than 100 °C (212°C).

Action Taken When the DTC Sets

- DTC P1EF3-P1EF5 are type A DTCs.
- Disables the vehicle high-voltage battery charging.

Conditions for Clearing the DTC

DTC P1EF3-P1EF5 are type A DTCs.

Reference Information

Schematic Reference

Plug-In Charging Schematics

Connector End View Reference

Component Connector End Views

Description and Operation

Plug-In Charging System Description and Operation

Electrical Information Reference

- Circuit Testing
- Connector Repairs
- Testing for Intermittent Conditions and Poor Connections
- Wiring Repairs

DTC Type Reference

Powertrain Diagnostic Trouble Code (DTC) Type Definitions

Scan Tool Reference

Control Module References for scan tool information

Special Tools

EL-48900 HEV Safety Kit

For equivalent regional tools, refer to Special Tools .

Circuit/System Verification

Danger: Always perform the High-Voltage Disabling procedure prior to servicing any High Voltage component or connection. Personal Protection Equipment (PPE) and proper procedures must be followed.

The High-Voltage Disabling procedure will perform the following tasks:

- Identify how to disable high voltage.
- Identify how to test for the presence of high voltage.
- Identify conditions under which high voltage is always present and personal protection equipment (PPE) and proper procedures must be followed.

Before working on any high-voltage system, be sure to wear the following Personal Protection Equipment:

- Safety goggles with appropriate side shields when within 15 metres (50 feet) of the vehicle, either indoors or outdoors.
- Certified and up-to-date Class "0" Insulation gloves rated at 1000 V with leather protectors.
  - Visually and functionally inspect the gloves before use.
  - Wear the Insulation gloves with leather protectors at all times when working with the high-voltage battery assembly, whether the system is energised or not.

Failure to follow the procedures exactly as written may result in serious injury or death.

1. Verify that no hybrid electronics coolant system DTC is set.
   If DTC is set, refer to Diagnostic Trouble Code (DTC) List - Vehicle
2. Verify that the hybrid/EV electronics cooling system is functioning properly, refer to Hybrid/EV Electronics Cooling Diagnostic .
   If the hybrid/EV electronics cooling system is not functioning properly, repair the fault.
3. Disable the high voltage at the T18 battery charger. Refer to High Voltage Disabling . Replace the T18 battery charger.

Repair Instructions

Perform the Diagnostic Repair Verification after completing the diagnostic procedure.

Control Module References for battery charger control module replacement, programming and set-up

&#169© Copyright Chevrolet. All rights reserved

Charge Port Housing Bezel Replacement

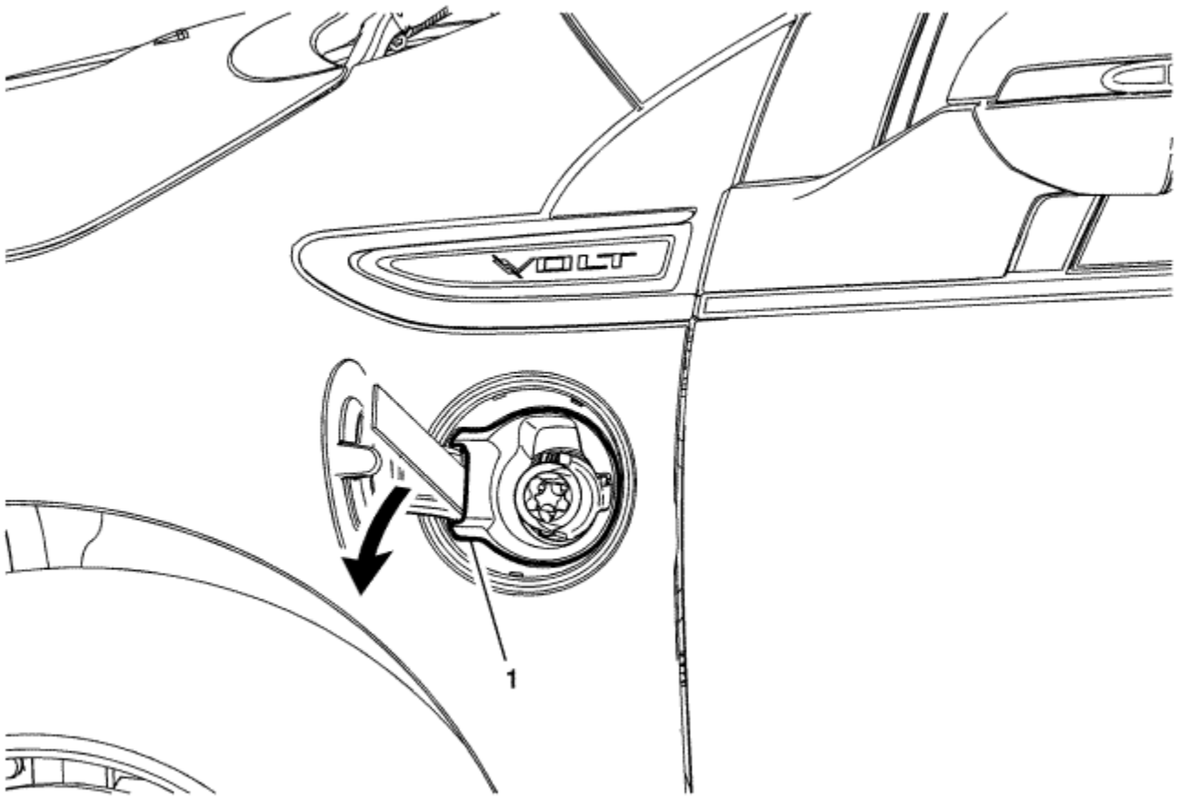

Callout	Component Name

Danger: Always perform the High-Voltage Disabling procedure prior to servicing any High Voltage component or connection. Personal Protection Equipment (PPE) and proper procedures must be followed.

The High-Voltage Disabling procedure will perform the following tasks:

Identify how to disable high voltage.

-
- Identify how to test for the presence of high voltage.
- Identify conditions under which high voltage is always present and personal protection equipment (PPE) and proper procedures must be followed.

Before working on any high-voltage system, be sure to wear the following Personal Protection Equipment:

- Safety goggles with appropriate side shields when within 15 metres (50 feet) of the vehicle, either indoors or outdoors.
- Certified and up-to-date Class "0" Insulation gloves rated at 1000 V with leather protectors.
  - Visually and functionally inspect the gloves before use.
  - Wear the Insulation gloves with leather protectors at all times when working with the high-voltage battery assembly, whether the system is energised or not.

Failure to follow the procedures exactly as written may result in serious injury or death.

Danger: The Volt Battery Pack will utilise an exchange program. Please consult the most recent revision of bulletin/PI #PIP4841, available in Service Information (SI), for a list of approved Volt Battery Pack service procedures. Components that may be removed and serviced without exchanging the complete battery pack are identified in the bulletin/PI. Please contact the GM Technical Assistance Centre (1-877-446-8227) if you have any questions.

Preliminary Procedures

1. Electrically release and open the charge port door.
2. Disable the high-voltage system. Refer to High Voltage Disabling .

1	Charge Port Housing Bezel **Procedure** 1. Insert a plastic wedge-type tool between the hinge assembly and housing bezel. 2. Gently pry the bezel outward and disengage the bezel from the charge port housing assembly. 3. Remove the charge port housing bezel. 4. Enable the high-voltage system. Refer to High-Voltage Enabling .

&#169© Copyright Chevrolet. All rights reserved

Charge Port Door Replacement

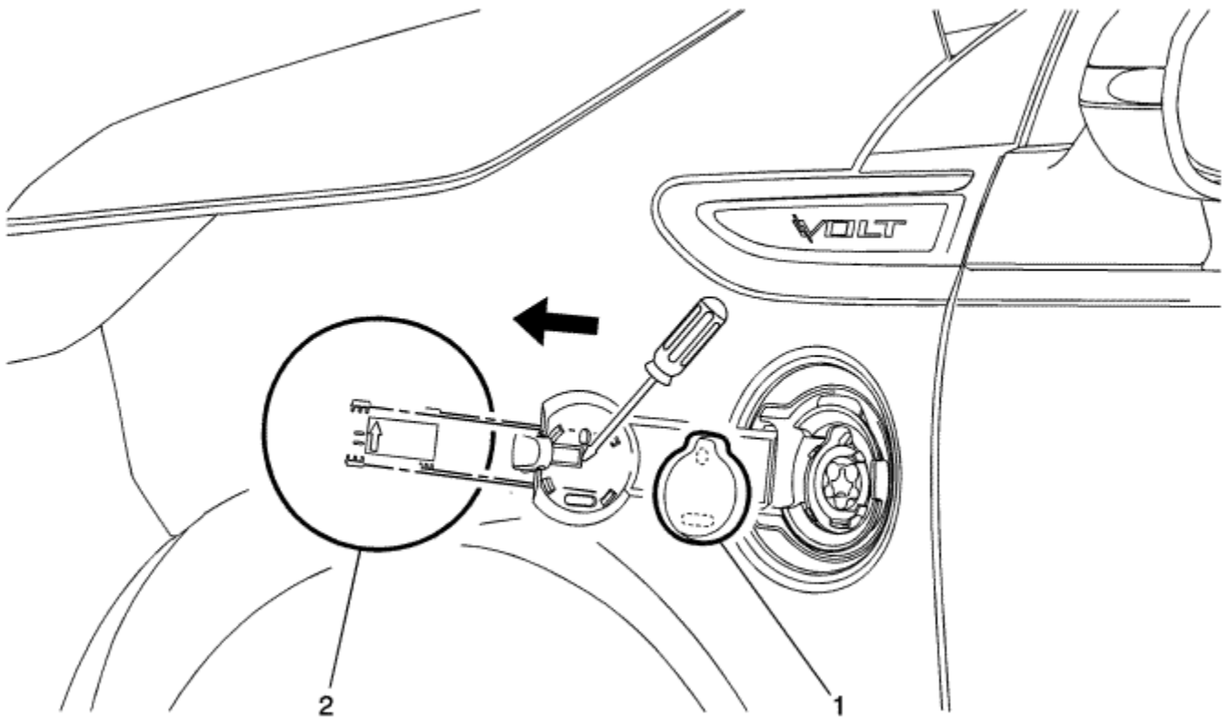

Callout	Component Name
Danger: Always perform the High-Voltage Disabling procedure prior to servicing any High Voltage component or connection. Personal Protection Equipment (PPE) and proper procedures must be followed. The High-Voltage Disabling procedure will perform the following tasks: Identify how to disable high voltage.	

-
- Identify how to test for the presence of high voltage.
- Identify conditions under which high voltage is always present and personal protection equipment (PPE) and proper procedures must be followed.

Before working on any high-voltage system, be sure to wear the following Personal Protection Equipment:

- Safety goggles with appropriate side shields when within 15 metres (50 feet) of the vehicle, either indoors or outdoors.
- Certified and up-to-date Class "0" Insulation gloves rated at 1000 V with leather protectors.
  - Visually and functionally inspect the gloves before use.
  - Wear the Insulation gloves with leather protectors at all times when working with the high-voltage battery assembly, whether the system is energised or not.

Failure to follow the procedures exactly as written may result in serious injury or death.

Danger: The Volt Battery Pack will utilise an exchange program. Please consult the most recent revision of bulletin/PI #PIP4841, available in Service Information (SI), for a list of approved Volt Battery Pack service procedures. Components that may be removed and serviced without exchanging the complete battery pack are identified in the bulletin/PI. Please contact the GM Technical Assistance Centre (1-877-446-8227) if you have any questions.

Preliminary Procedures

1. Electrically release and open the charge port door.
2. Disable the high-voltage system. Refer to High Voltage Disabling .

1	Charge Port Door Seal **Procedure** Hold the charge port door with one hand and pull the seal from the inside of the door hinge in order to remove.
2	Charge Port Door **Procedure** 1. Using a flat-blade screwdriver, lift slightly upwards on the tab at the centre of the hinge in order to release the door from the hinge assembly. 2. Slide the door outwards, away from the hinge and remove. 3. Enable the high-voltage system. Refer to High-Voltage Enabling .

&#169© Copyright Chevrolet. All rights reserved

Charge Port Housing Replacement

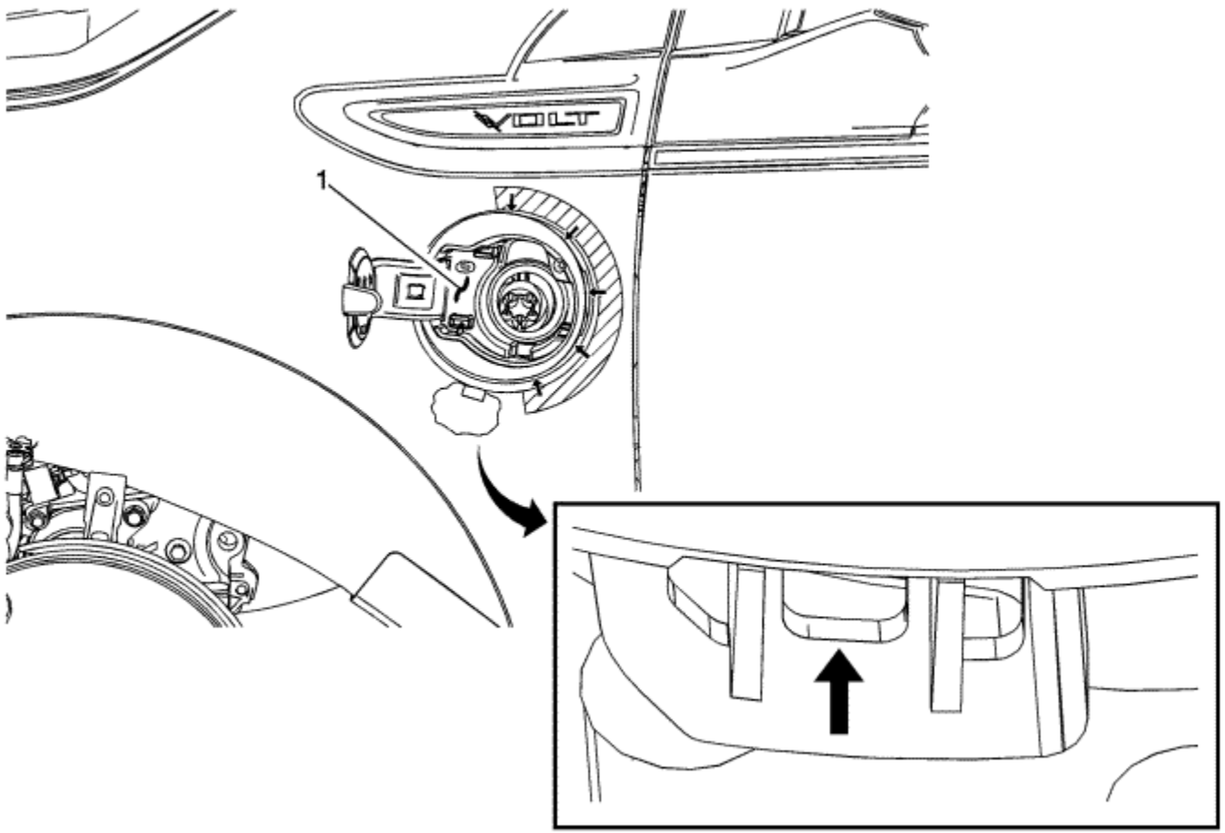

Callout	Component Name
Danger: Always perform the High-Voltage Disabling procedure prior to servicing any High Voltage component or connection. Personal Protection Equipment (PPE) and proper procedures must be followed. The High-Voltage Disabling procedure will perform the following tasks: Identify how to disable high voltage.	

-
- Identify how to test for the presence of high voltage.
- Identify conditions under which high voltage is always present and personal protection equipment (PPE) and proper procedures must be followed.

Before working on any high-voltage system, be sure to wear the following Personal Protection Equipment:

- Safety goggles with appropriate side shields when within 15 metres (50 feet) of the vehicle, either indoors or outdoors.
- Certified and up-to-date Class "0" Insulation gloves rated at 1000 V with leather protectors.
  - Visually and functionally inspect the gloves before use.
  - Wear the Insulation gloves with leather protectors at all times when working with the high-voltage battery assembly, whether the system is energised or not.

Failure to follow the procedures exactly as written may result in serious injury or death.

Danger: The Volt Battery Pack will utilise an exchange program. Please consult the most recent revision of bulletin/PI #PIP4841, available in Service Information (SI), for a list of approved Volt Battery Pack service procedures. Components that may be removed and serviced without exchanging the complete battery pack are identified in the bulletin/PI. Please contact the GM Technical Assistance Centre (1-877-446-8227) if you have any questions.

Preliminary Procedures

1. Disable the high-voltage system. Refer to High Voltage Disabling .
2. Remove the left front wheelhouse rear liner. Refer to Front Wheelhouse Rear Liner Replacement .
3. Disengage the cable end from the charge port door actuator.
4. Using needle nose pliers, pinch the back of the retainer tabs to disengage the charge port door actuator harness retainer from the edge of the fender.
5. Disconnect the electrical connector for the charge port door ajar indicator switch assembly.
6. Remove the charge port door. Refer to Charge Port Door Replacement .
7. Remove the charge port housing bezel. Refer to Charge Port Housing Bezel Replacement .

1	Charge Port Housing Assembly **Caution:** Refer to Exterior Trim Emblem Removal Caution in the Preface section. **Procedure** 1. From inside the wing, release the lower tab to the charge port housing assembly. 2. Push outwards on the assembly housing. 3. Using a plastic trim-type stick, at the arrows, gently pry outwards while pulling outwards on the rear edge of the housing. 4. Rotate the rear edge of the housing forwards, pull the housing and seal from the front wing centre reinforcement bracket. 5. Remove the charge port housing assembly along with the electrical harness for the charge port door ajar indicator switch assembly and charge port door actuator cable assembly. 6. Transfer the charge port door ajar indicator switch assembly. Refer to Charge Port Door Ajar Indicator Switch Replacement . 7. Transfer the charge port door actuator cable. Refer to Charge Port Door Actuator Cable Replacement .

Tip
Upon the final assembly of the charge port housing into the front wing centre reinforcement bracket, ensure to re-seat the charge port housing seal around the entire circumference of the charge port receptacle. Use a blunt tool such as a rounded plastic trim tool to push the seal into position around the charge port receptacle.

8. Enable the high-voltage system. Refer to High-Voltage Enabling .

&#169© Copyright Chevrolet. All rights reserved

Charge Port Door Actuator Replacement

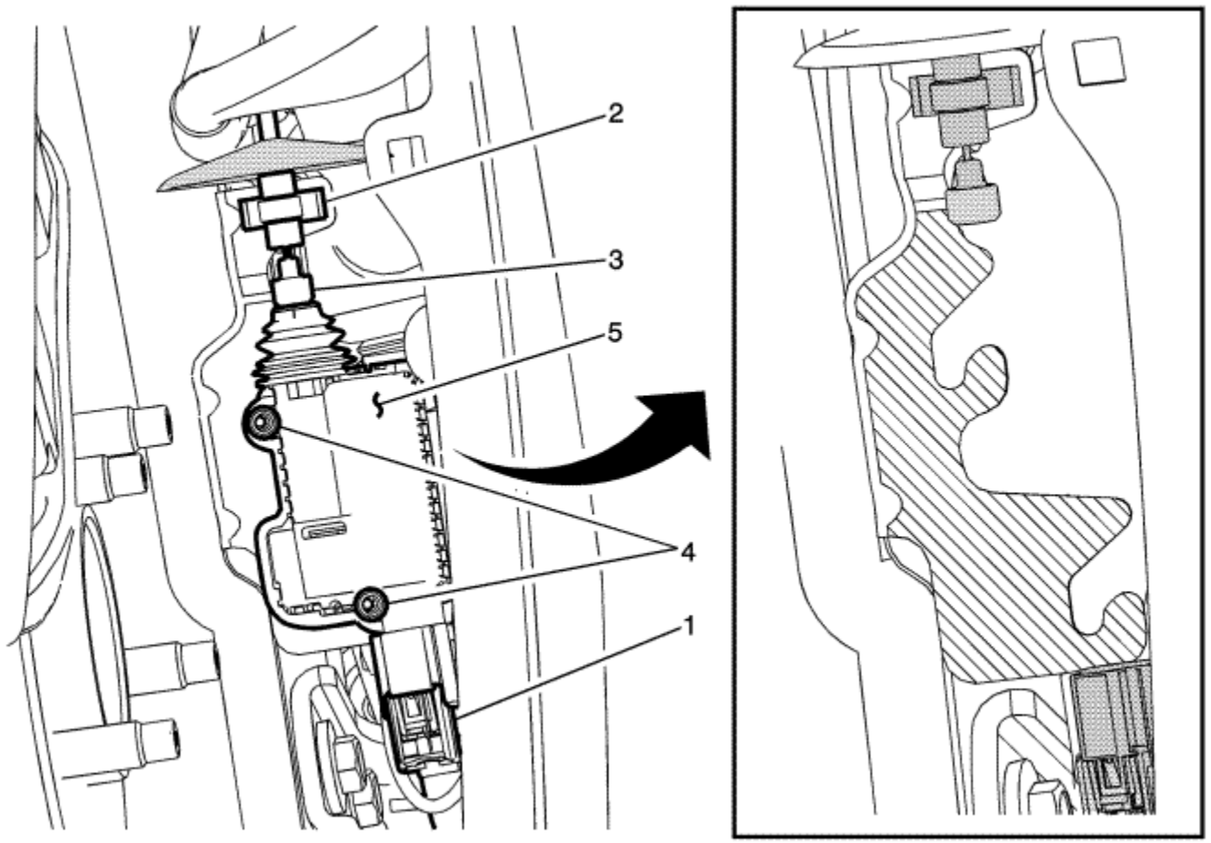

Callout	Component Name
Danger: Always perform the High-Voltage Disabling procedure prior to servicing any High Voltage component or connection. Personal Protection Equipment (PPE) and proper procedures must be followed. The High-Voltage Disabling procedure will perform the following tasks: Identify how to disable high voltage.	

-
- Identify how to test for the presence of high voltage.
- Identify conditions under which high voltage is always present and personal protection equipment (PPE) and proper procedures must be followed.

Before working on any high-voltage system, be sure to wear the following Personal Protection Equipment:

- Safety goggles with appropriate side shields when within 15 metres (50 feet) of the vehicle, either indoors or outdoors.
- Certified and up-to-date Class "0" Insulation gloves rated at 1000 V with leather protectors.
  - Visually and functionally inspect the gloves before use.
  - Wear the Insulation gloves with leather protectors at all times when working with the high-voltage battery assembly, whether the system is energised or not.

Failure to follow the procedures exactly as written may result in serious injury or death.

Danger: The Volt Battery Pack will utilise an exchange program. Please consult the most recent revision of bulletin/PI #PIP4841, available in Service Information (SI), for a list of approved Volt Battery Pack service procedures. Components that may be removed and serviced without exchanging the complete battery pack are identified in the bulletin/PI. Please contact the GM Technical Assistance Centre (1-877-446-8227) if you have any questions.

Preliminary Procedures

1. Disable the high-voltage system. Refer to High Voltage Disabling .
2. Remove the left front rear wheelhouse liner. Refer to Front Wheelhouse Rear Liner Replacement .

1	Charge Port Door Actuator Electrical Connector **Procedure** Disconnect the electrical connector from the actuator assembly.
2	Charge Port Door Actuator Retainer **Procedure** Pinch the backside of the retainer with needle nose pliers and remove the retainer from the inner front wing bracket.
3	Charge Port Door Actuator Cable Collar **Procedure** Using a small flat-bladed tool, release the collar from the charge port actuator button end.
	Charge Port Door Actuator Screw (Qty: 2) **Caution:** Refer to Fastener Caution in the Preface section.

4	**Procedure** From the front side, inside the wheelhouse area, use a E4 TORX® and turn the screws clockwise in order to LOOSEN, Do Not Remove, from the front side of the charge port door actuator. **Tighten** 3.5 N·m (31 lb in)
5	Charge Port Door Actuator **Procedure** 1. Slide the actuator upwards and slightly to the right in order to remove the charge port door actuator from the inner front wing bracket. 2. Enable the high-voltage system. Refer to High-Voltage Enabling .

&#169© Copyright Chevrolet. All rights reserved

Charge Port Door Hinge Bezel Replacement

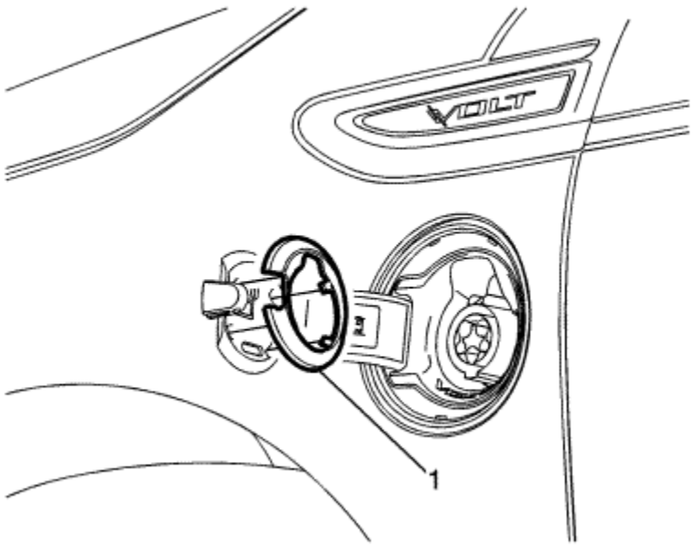

Callout	Component Name

Danger: Always perform the High-Voltage Disabling procedure prior to servicing any High Voltage component or connection. Personal Protection Equipment (PPE) and proper procedures must be followed.

The High-Voltage Disabling procedure will perform the following tasks:

- Identify how to disable high voltage.
- Identify how to test for the presence of high voltage.
- Identify conditions under which high voltage is always present and personal protection equipment (PPE) and proper procedures must be followed.

Before working on any high-voltage system, be sure to wear the following Personal Protection Equipment:

- Safety goggles with appropriate side shields when within 15 metres (50 feet) of the vehicle, either indoors or outdoors.
- Certified and up-to-date Class "0" Insulation gloves rated at 1000 V with leather protectors.
  - Visually and functionally inspect the gloves before use.

- Wear the Insulation gloves with leather protectors at all times when working with the high-voltage battery assembly, whether the system is energised or not.

Failure to follow the procedures exactly as written may result in serious injury or death.

Danger: The Volt Battery Pack will utilise an exchange program. Please consult the most recent revision of bulletin/PI #PIP4841, available in Service Information (SI), for a list of approved Volt Battery Pack service procedures. Components that may be removed and serviced without exchanging the complete battery pack are identified in the bulletin/PI. Please contact the GM Technical Assistance Centre (1-877-446-8227) if you have any questions.

Preliminary Procedures

1. Remove the charge port door. Refer to Charge Port Door Replacement .
2. Disable the high-voltage system. Refer to High Voltage Disabling .

1	Charge Port Hinge Bezel **Procedure** 1. Release the four tabs from the backside of the hinge and remove the charge port hinge bezel. 2. Enable the high-voltage system. Refer to High-Voltage Enabling .

&#169© Copyright Chevrolet. All rights reserved

Charge Port Door Actuator Cable Replacement

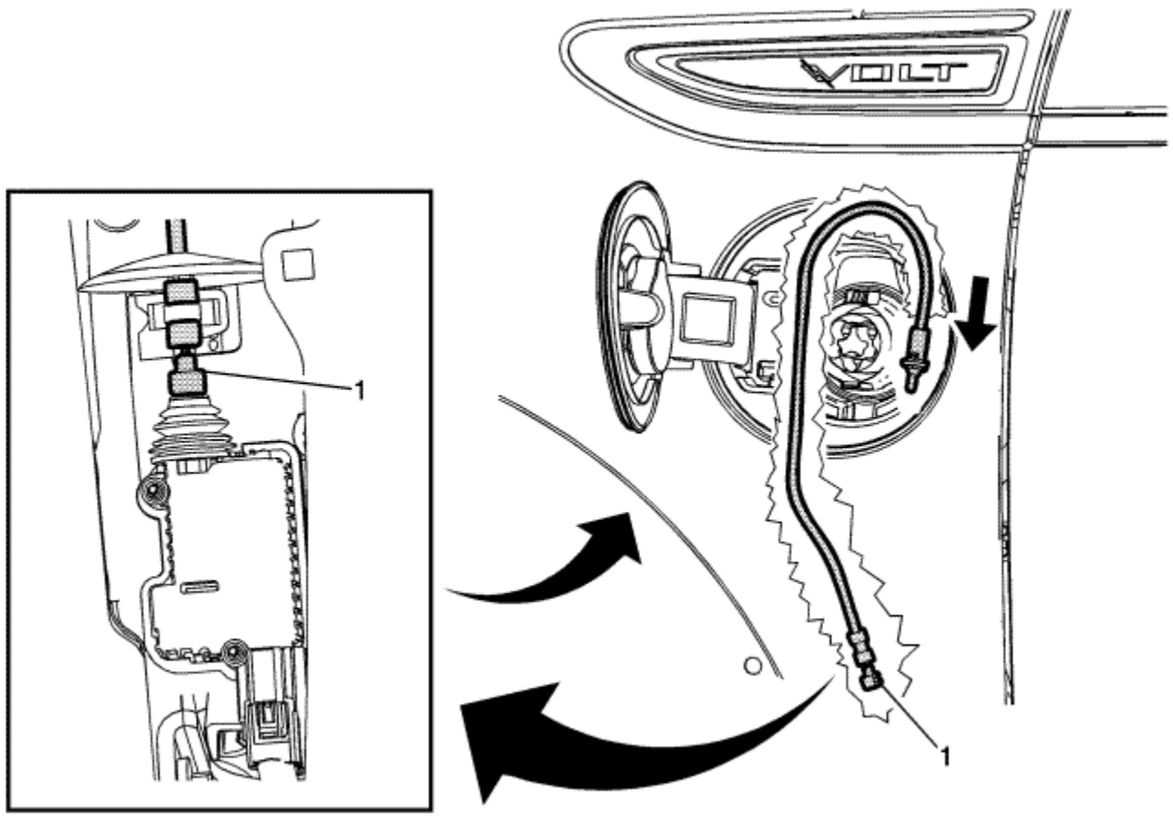

Callout	Component Name
Danger: Always perform the High-Voltage Disabling procedure prior to servicing any High Voltage component or connection. Personal Protection Equipment (PPE) and proper procedures must be followed. The High-Voltage Disabling procedure will perform the following tasks: Identify how to disable high voltage.	

-
- Identify how to test for the presence of high voltage.
- Identify conditions under which high voltage is always present and personal protection equipment (PPE) and proper procedures must be followed.

Before working on any high-voltage system, be sure to wear the following Personal Protection Equipment:

- Safety goggles with appropriate side shields when within 15 metres (50 feet) of the vehicle, either indoors or outdoors.
- Certified and up-to-date Class "0" Insulation gloves rated at 1000 V with leather protectors.
  - Visually and functionally inspect the gloves before use.
  - Wear the Insulation gloves with leather protectors at all times when working with the high-voltage battery assembly, whether the system is energised or not.

Failure to follow the procedures exactly as written may result in serious injury or death.

Danger: The Volt Battery Pack will utilise an exchange program. Please consult the most recent revision of bulletin/PI #PIP4841, available in Service Information (SI), for a list of approved Volt Battery Pack service procedures. Components that may be removed and serviced without exchanging the complete battery pack are identified in the bulletin/PI. Please contact the GM Technical Assistance Centre (1-877-446-8227) if you have any questions.

Preliminary Procedures

1. Disable the high-voltage system. Refer to High Voltage Disabling .
2. Remove the left front wheelhouse rear liner. Refer to Front Wheelhouse Rear Liner Replacement .
3. Remove the charge port housing bezel. Refer to Charge Port Housing Bezel Replacement .
4. Remove the charge port door actuator seal. Refer to Charge Port Door Actuator Seal Replacement .
5. Using a 10 mm closed end wrench, turn the cable nut at the charge port housing 1/8 turn counter-clockwise to disengage the actuator cable lock from the charge port housing.
6. Attach a string to the actuator end of the cable before removing the cable from inside of the wing.
7. Pull the cable downwards, outwards from the charge port housing.

1	Charge Port Door Actuator Cable **Procedure** 1. Attach the string to the actuator end of the cable. 2. Insert the actuator end of the actuator cable into the hole in the charge port housing assembly. 3. Feed the cable in behind the wing in between the charge port receptacle cable and inner wing to the top of the charge port door actuator assembly using the string as a guide. 4. Using the 10 mm closed end wrench, align the tabs on the nut end of the cable with the slots in the housing. 5. Hold the cable in position and turn the nut 1/8 turn clockwise to lock the cable to the charge port housing. 6. Remove the string from the actuator end of the cable. 7. Install the charge port door actuator seal. Refer to Charge Port Door Actuator Seal Replacement . 8. Enable the high-voltage system. Refer to High-Voltage Enabling .

&#169© Copyright Chevrolet. All rights reserved

Charge Port Door Actuator Seal Replacement

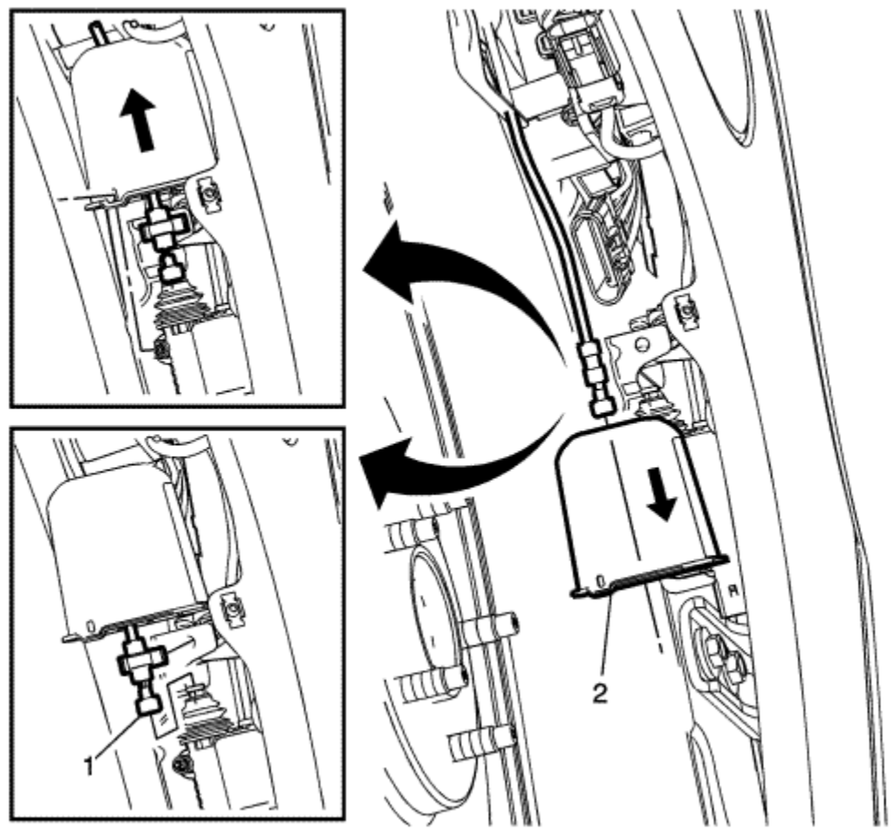

Callout	Component Name
Danger: Always perform the High-Voltage Disabling procedure prior to servicing any High Voltage component or connection. Personal Protection Equipment (PPE) and proper procedures must be followed. The High-Voltage Disabling procedure will perform the following tasks: Identify how to disable high voltage.	

-
- Identify how to test for the presence of high voltage.
- Identify conditions under which high voltage is always present and personal protection equipment (PPE) and proper procedures must be followed.

Before working on any high-voltage system, be sure to wear the following Personal Protection Equipment:

- Safety goggles with appropriate side shields when within 15 metres (50 feet) of the vehicle, either indoors or outdoors.
- Certified and up-to-date Class "0" Insulation gloves rated at 1000 V with leather protectors.
  - Visually and functionally inspect the gloves before use.
  - Wear the Insulation gloves with leather protectors at all times when working with the high-voltage battery assembly, whether the system is energised or not.

Failure to follow the procedures exactly as written may result in serious injury or death.

Danger: The Volt Battery Pack will utilise an exchange program. Please consult the most recent revision of bulletin/PI #PIP4841, available in Service Information (SI), for a list of approved Volt Battery Pack service procedures. Components that may be removed and serviced without exchanging the complete battery pack are identified in the bulletin/PI. Please contact the GM Technical Assistance Centre (1-877-446-8227) if you have any questions.

Preliminary Procedures

1. Disable the high-voltage system. Refer to High Voltage Disabling .
2. Remove the front wheelhouse rear liner. Refer to Front Wheelhouse Rear Liner Replacement .
3. Lubricate the cable above the actuator seal with two drops of dish soap.
4. Squeeze the seal in order to clear the actuator screw and slide the seal upwards on the actuator cable far enough to access the cable retainer clip.
5. Using pliers, squeeze the backside of the cable retainer and remove the retainer from the wing bracket.
6. Remove the cable retainer clip from the cable.
7. Lubricate the cable from inside the seal down to the end of the cable with two drops of dish soap.
8. Pull the actuator seal from the actuator cable and remove.

1	Charge Port Door Actuator Cable Retainer
2	Charge Port Door Actuator Seal **Tip** Ensure not to cut or damage the NEW actuator seal opening when installing onto the cable. Make sure the cable has enough lubricant for the seal to slide onto the actuator cable with ease. Enable the high-voltage system. Refer to High-Voltage Enabling .

&#169© Copyright Chevrolet. All rights reserved

Charge Port Door Hinge Seal Replacement

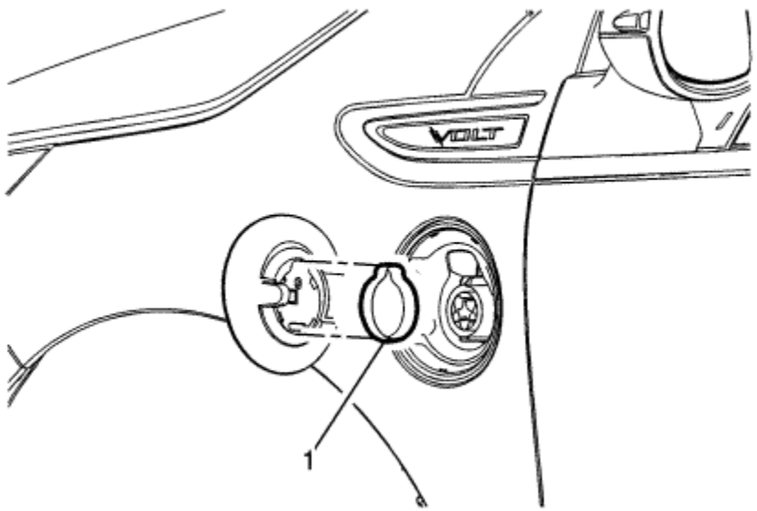

Callout	Component Name

Danger: Always perform the High-Voltage Disabling procedure prior to servicing any High Voltage component or connection. Personal Protection Equipment (PPE) and proper procedures must be followed.

The High-Voltage Disabling procedure will perform the following tasks:

- Identify how to disable high voltage.
- Identify how to test for the presence of high voltage.
- Identify conditions under which high voltage is always present and personal protection equipment (PPE) and proper procedures must be followed.

Before working on any high-voltage system, be sure to wear the following Personal Protection Equipment:

- Safety goggles with appropriate side shields when within 15 metres (50 feet) of the vehicle, either indoors or outdoors.
- Certified and up-to-date Class "0" Insulation gloves rated at 1000 V with leather protectors.
  - Visually and functionally inspect the gloves before use.

- Wear the Insulation gloves with leather protectors at all times when working with the high-voltage battery assembly, whether the system is energised or not.

Failure to follow the procedures exactly as written may result in serious injury or death.

Danger: The Volt Battery Pack will utilise an exchange program. Please consult the most recent revision of bulletin/PI #PIP4841, available in Service Information (SI), for a list of approved Volt Battery Pack service procedures. Components that may be removed and serviced without exchanging the complete battery pack are identified in the bulletin/PI. Please contact the GM Technical Assistance Centre (1-877-446-8227) if you have any questions.

Preliminary Procedures

1. Electrically release and open the charge port door.
2. Disable the high-voltage system. Refer to High Voltage Disabling .

1	Charge Port Door Hinge Seal **Procedures** 1. Hold the charge port door with one hand and pull the seal from the inside of the door hinge bezel in order to remove. 2. Enable the high-voltage system. Refer to High-Voltage Enabling .

&#169© Copyright Chevrolet. All rights reserved

Charge Port Door Ajar Indicator Switch Replacement

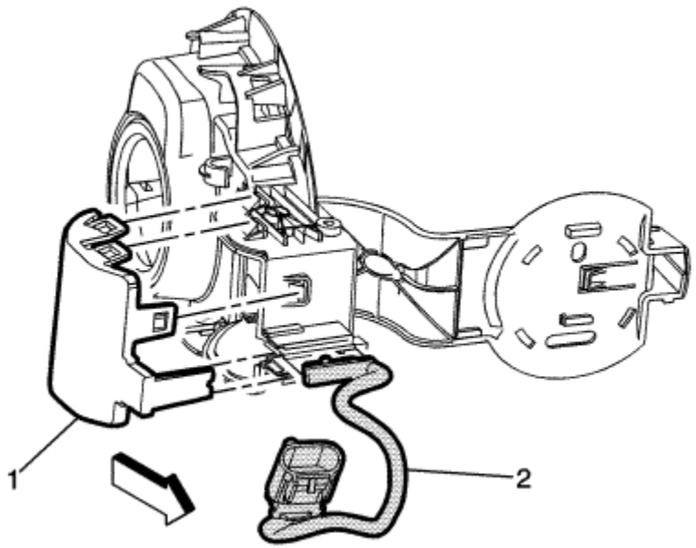

Callout	Component Name

Danger: Always perform the High-Voltage Disabling procedure prior to servicing any High Voltage component or connection. Personal Protection Equipment (PPE) and proper procedures must be followed.

The High-Voltage Disabling procedure will perform the following tasks:

- Identify how to disable high voltage.
- Identify how to test for the presence of high voltage.
- Identify conditions under which high voltage is always present and personal protection equipment (PPE) and proper procedures must be followed.

Before working on any high-voltage system, be sure to wear the following Personal Protection Equipment:

- Safety goggles with appropriate side shields when within 15 metres (50 feet) of the vehicle, either indoors or outdoors.
- Certified and up-to-date Class "0" Insulation gloves rated at 1000 V with leather protectors.
  - Visually and functionally inspect the gloves before use.

- Wear the Insulation gloves with leather protectors at all times when working with the high-voltage battery assembly, whether the system is energised or not.

Failure to follow the procedures exactly as written may result in serious injury or death.

Danger: The Volt Battery Pack will utilise an exchange program. Please consult the most recent revision of bulletin/PI #PIP4841, available in Service Information (SI), for a list of approved Volt Battery Pack service procedures. Components that may be removed and serviced without exchanging the complete battery pack are identified in the bulletin/PI. Please contact the GM Technical Assistance Centre (1-877-446-8227) if you have any questions.

Preliminary Procedures

1. Disable the high-voltage system. Refer to High Voltage Disabling .
2. Remove the charge port housing assembly. Refer to Charge Port Housing Replacement .

1	Charge Port Housing Cap **Procedure** Release the housing cap fingers from the charge port housing assembly and remove the cap from the housing.
2	Charge Port Door Ajar Indicator Switch Assembly **Procedure** 1. Release the charge port door ajar indicator switch assembly and harness from the charge port housing cavity. 2. Enable the high-voltage system. Refer to High-Voltage Enabling .

&#169© Copyright Chevrolet. All rights reserved

Drive Motor Battery Charger Replacement

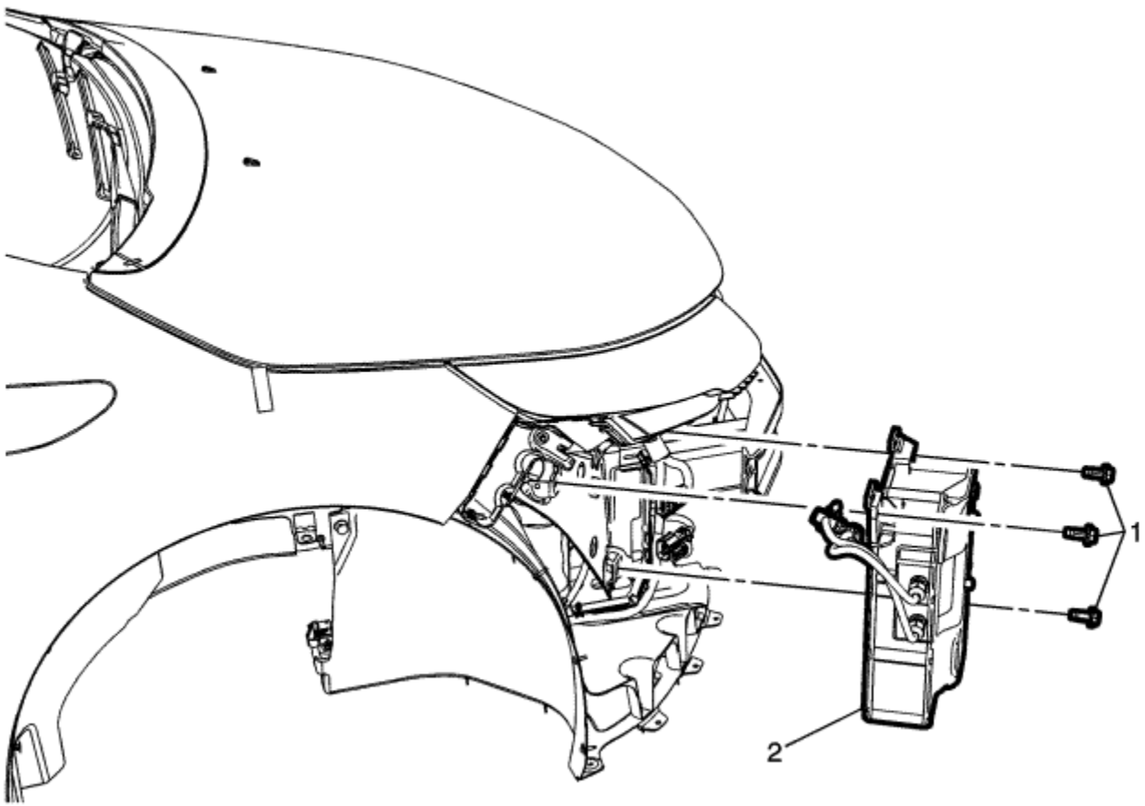

Callout	Component Name
Danger: Always perform the High-Voltage Disabling procedure prior to servicing any High Voltage component or connection. Personal Protection Equipment (PPE) and proper procedures must be followed. The High-Voltage Disabling procedure will perform the following tasks: Identify how to disable high voltage.	

-
- Identify how to test for the presence of high voltage.
- Identify conditions under which high voltage is always present and personal protection equipment (PPE) and proper procedures must be followed.

Before working on any high-voltage system, be sure to wear the following Personal Protection Equipment:

- Safety goggles with appropriate side shields when within 15 metres (50 feet) of the vehicle, either indoors or outdoors.
- Certified and up-to-date Class "0" Insulation gloves rated at 1000 V with leather protectors.
  - Visually and functionally inspect the gloves before use.
  - Wear the Insulation gloves with leather protectors at all times when working with the high-voltage battery assembly, whether the system is energised or not.

Failure to follow the procedures exactly as written may result in serious injury or death.

Danger: The Volt Battery Pack will utilise an exchange program. Please consult the most recent revision of bulletin/PI #PIP4841, available in Service Information (SI), for a list of approved Volt Battery Pack service procedures. Components that may be removed and serviced without exchanging the complete battery pack are identified in the bulletin/PI. Please contact the GM Technical Assistance Centre (1-877-446-8227) if you have any questions.

Preliminary Procedures

1. Disable the high-voltage system. Refer to High Voltage Disabling .
2. Remove the front bumper fascia. Refer to Front Bumper Fascia Removal and Installation : Volt → Ampera .
3. Disconnect the electrical connectors.
4. Disconnect the coolant hoses from the charger assembly. Refer to Generator Control Module Coolant Radiator Hose Replacement and Drive Motor Generator Control Module Cooling Outlet Hose Replacement .

1	Drive Motor Battery Charger Fastener (Qty: 3) **Caution:** Refer to Fastener Caution in the Preface section. **Tighten** 22 N·m (16 lb ft)
2	Drive Motor Battery Charger Assembly **Procedure** 1. Fill the drive motor battery charger cooling system. Refer to Drive Motor Generator Power Inverter Module Cooling System Draining and Filling . 2. Enable the high-voltage system. Refer to High-Voltage Enabling . 3. Program the drive motor battery charger. Refer to Battery Charger Programming and Set-up .

&#169© Copyright Chevrolet. All rights reserved

Drive Motor Battery Charger Receptacle Replacement

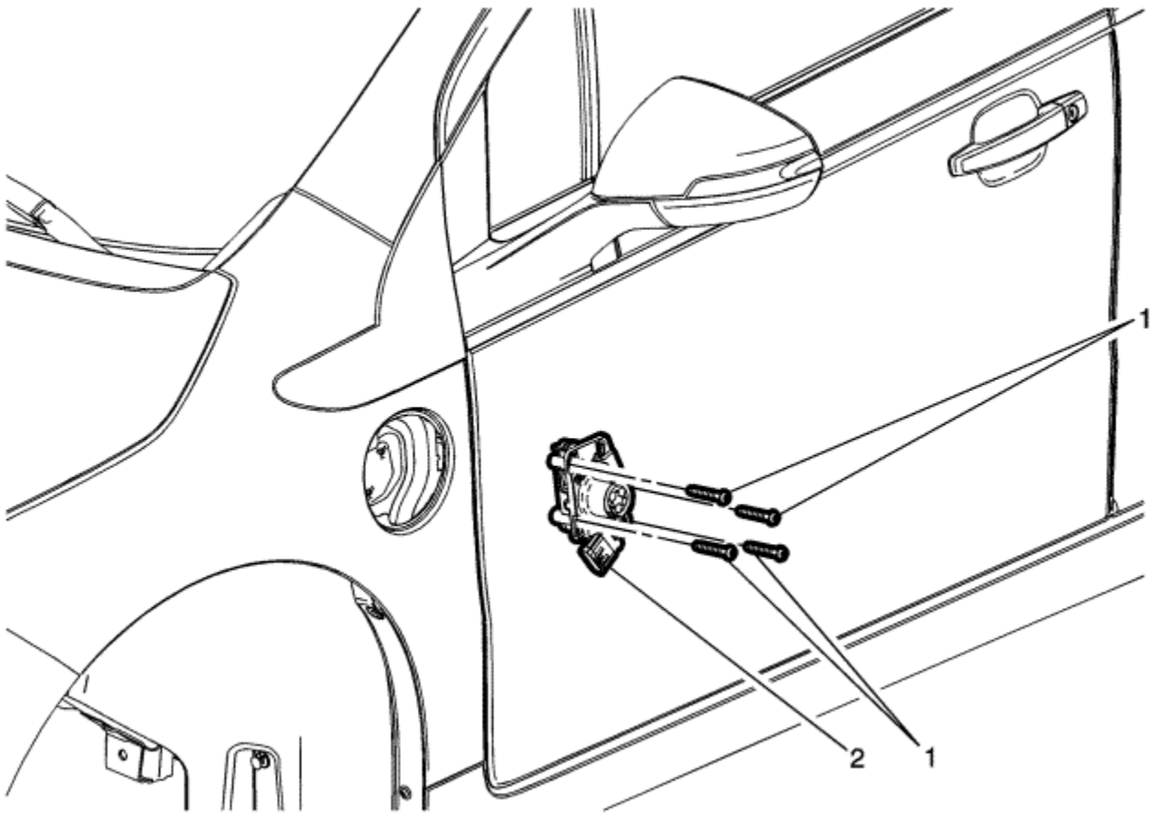

Callout	Component Name
Preliminary Procedures 1. Disable the high-voltage system. Refer to High Voltage Disabling . 2. Remove the charge port housing. Refer to Charge Port Housing Replacement .	

1	Drive Motor Battery Charger Receptacle Fastener (Qty: 4) **Caution:** Refer to Fastener Caution in the Preface section. **Tighten** 12 N·m (106 lb in)
2	Drive Motor Battery Charger Receptacle Fastener **Procedure** 1. Disconnect the electrical connector. 2. Enable the high-voltage system. Refer to High-Voltage Enabling .

© Copyright Chevrolet. All rights reserved

Plug-In Charging System Description and Operation

Plug-In Charging System components

The Chevrolet Volt high-voltage battery charging system consists of four main components: The drive motor battery charger cable, the vehicle charge port (including receptacle), the battery charger and the hybrid/EV battery pack. A variety of mechanical, visual and audio indicators/devices are used to communicate/interface with the customer or other user of the charging equipment.

Drive Motor Battery Charger Equipment

The drive motor battery charger cable provided with the vehicle features a standard household electrical plug on one end and a plug designed to interface with the vehicle charge port receptacle on the other end. The drive motor battery charger cable features a charge current interrupt device with AC power, fault and missing earth indicators and it is stored beneath the vehicle's load floor. An optional 230/240 V charge station is also available to some customers who want to reduce the amount of time needed to recharge the high-voltage battery. The 230/240 V charge station is hard-wired to a 230/240 V power supply and mounted to the wall in the customer's garage. The 230/240 V charge station features the same plug on the vehicle end as the drive motor battery charger cable.

The Drive Motor Battery Charger Cable Indicators and the Vehicle Indicators

The drive motor battery charger cable has three indicators on it. The AC present indicator becomes permanently green when AC voltage is present at the wall plug. The Fault Indicator becomes permanently red for a current trip or failed self check. The Missing Earth Indicator becomes permanent red when no earth is detected at the wall outlet.

The battery charger is supervised and controlled by the hybrid/EV powertrain control module 2. The hybrid/EV powertrain control module 2 is the primary controller, and all diagnostic trouble codes will set in that module even though some of the diagnostics are actually run within the battery charger. Charging events can be delayed at customer request to take advantage of lower rates during non-peak hours. The status of charging events, including delays, is communicated to the user through visual indications (instrument panel mounted charge status indicator) and audio tones (charge status enunciator). The vehicle charge status indicator, located at the top middle of the instrument panel, will be permanently green when the vehicle is charging under automatic control. It will have a fast flash green if the charging is delayed and will begin later. It will have a slow flash green when charging is complete. A permanent yellow indicator means the vehicle is not able to accept a charge. If there is no indicator, the drive motor battery charger cable is not working properly or not connected.

Vehicle Receptacle

The vehicle receptacle is located behind the charging port door on the driver's side front wing. The receptacle is accessed by pressing a switch located on the inside of the driver's door.

Battery Charger

The hybrid/EV battery charger is a serviceable assembly containing several micro-processors, two separate high-voltage chargers and a single low-voltage charger. It is mounted behind the passenger side headlamp assembly, is programmable and communicates via serial data. Engine coolant is used to ensure that the charger does not exceed its maximum designed operating temperature. The low-voltage charger is used to ensure that the 12 V battery does not become depleted during a charge event, while one of the high-voltage chargers is used with a 120 V charge source and both are used with a 240 V charge source.

© Copyright Chevrolet. All rights reserved

Special Tools

Illustration	Tool Number/Description
	EL-48900 HEV Safety Kit

© Copyright Chevrolet. All rights reserved

Data Communication Schematics

Figure 1: High Speed GMLAN
Figure 2: High-Voltage Management and Powertrain Expansion Buses
Figure 3: Chassis Expansion Bus
Figure 4: Low Speed CAN
Figure 5: Communications Enable
Figure 6: Serial Data Wake-Up
Figure 7: Linear Interconnect Network (LIN)

© Copyright Chevrolet. All rights reserved

Body Control System Schematics

Figure 1: Power, Earth and Data Communication
Figure 2: Subsystem References (1 of 3)
Figure 3: Subsystem References (2 of 3)
Figure 4: Subsystem References (3 of 3)

© Copyright Chevrolet. All rights reserved

Control Module U Code List

This list includes all Data Communications related U-code DTCs in alphanumeric order with descriptors for all modules. Not all DTCs listed will be applicable to all vehicles.

DTC	DTC Descriptor
U0001 00	High Speed CAN Bus Malfunction
U0001 04	High Speed CAN Bus Malfunction Open
U0002 00	High Speed CAN Bus
U0020 00	Low Speed CAN Bus
U0073 00	Control Module Communication Bus A Off
U0073 01	Control Module Communication Bus A Off Short to Battery
U0073 02	Control Module Communication Bus A Off Short to Ground
U0073 04	Control Module Communication Bus A Off Open
U0073 71	Control Module Communication Bus A Off Invalid Data
U0074 00	Control Module Communication Bus B Off
U0077 00	Control Module Chassis Expansion Communication Bus Off
U0078 00	Control Module Low Speed Communication Bus Off
U007A 00	Control Module High Voltage Energy Management Communication Bus Off
U0100 00	Lost Communication With Engine Control Module
U0100 71	Lost Communication With Engine Control Module Invalid Data
U0100 72	Lost Communication With Engine Control Module Message Counter Incorrect
U0100 74	Lost Communication With Engine Control Module Bus Signal Checksum Error
U0101 00	Lost Communication With Transmission Control Module
U0101 71	Lost Communication With Transmission Control Module Invalid Data
U0102 00	Lost Communication with Transfer Case Control Module
U0102 71	Lost Communication with Transfer Case Control Module Invalid Data
U0104 00	Lost Communication With Cruise Control Module
U0104 02	Lost Communication With Cruise Control Module Short to Ground
U0104 71	Lost Communication With Cruise Control Module Invalid Data
U0104 72	Lost Communication With Cruise Control Module Message Counter Incorrect

U0104 74	Lost Communication With Cruise Control Module Bus Signal Checksum Error
U0105 00	Lost Communication with Fuel Injector Control Module
U0109 00	Lost Communication with Fuel Pump Control Module
U010F 00	Lost Communication with Air-Conditioning Control Module
U0111 00	Lost Communication with Battery Energy Control Module
U0112 00	Lost Communication with Battery Energy Control Module
U0115 00	Lost Communication with ECM 2
U0117 00	Lost Communication With Power Take-Off Control Module
U0121 00	Lost Communication With Electronic Brake Control Module
U0121 03	Lost Communication With Electronic Brake Control Module Low Voltage
U0121 71	Lost Communication With Electronic Brake Control Module Invalid Data
U0121 72	Lost Communication With Electronic Brake Control Module Message Counter Incorrect
U0121 74	Lost Communication With Electronic Brake Control Module Bus Signal Checksum Error
U0122 00	Lost Communication With Vehicle Stability Control Module
U0125 00	Lost Communication With Multi-axis Acceleration Sensor Module
U0125 71	Lost Communication With Multi-axis Acceleration Sensor Module Invalid Data
U0125 72	Lost Communication With Multi-axis Acceleration Sensor Module Message Counter Incorrect
U0125 74	Lost Communication With Multi-axis Acceleration Sensor Module Bus Signal Checksum Error
U0126 00	Lost Communication With Steering Wheel Angle Sensor Module
U0126 71	Lost Communication With Steering Wheel Angle Sensor Module Invalid Data
U0126 72	Lost Communication With Steering Wheel Angle Sensor Module Message Counter Incorrect
U0126 74	Lost Communication With Steering Wheel Angle Sensor Module Bus Signal Checksum Error
U0126 5A	Lost Communication With Steering Wheel Angle Sensor Module Not Plausible
U0128 00	Lost Communication With Park Brake Control Module
U0128 71	Lost Communication With Park Brake Control Module Invalid Data
U0128 72	Lost Communication With Park Brake Control Module Message Counter Incorrect
U0128 74	Lost Communication With Park Brake Control Module Bus Signal Checksum Error
U0129 00	Lost Communication with Brake System Control Module
U0130 00	Lost Communication With Electric Power Steering Control Module
U0130 71	Lost Communication With Electric Power Steering Control Module Invalid Data
U0130 72	Lost Communication With Electric Power Steering Control Module Message Counter Incorrect
U0130 74	Lost Communication With Electric Power Steering Control Module Bus Signal Checksum Error
U0131 00	Lost Communication With Power Steering Control Module
U0131 71	Lost Communication With Power Steering Control Module Invalid Data

U0132 00	Lost Communication With Suspension Control Module
U0133 00	Lost Communication With Air Suspension Control Module
U0133 71	Lost Communication With Air Suspension Control Module Invalid Data
U0136 00	Lost Communication With Differential Control Module - Rear
U0136 71	Lost Communication With Differential Control Module - Rear Invalid Data
U0139 00	Lost Communication With Suspension Control Module
U0139 71	Lost Communication With Suspension Control Module Invalid Data
U0140 00	Lost Communication With Body Control Module
U0140 08	Lost Communication With Body Control Module Performance - Signal Invalid
U0140 71	Lost Communication With Body Control Module Invalid Data
U0140 72	Lost Communication With Body Control Module Message Counter Incorrect
U0140 74	Lost Communication With Body Control Module Bus Signal Checksum Error
U0146 00	Lost Communication with Gateway
U0151 00	Lost Communication With Inflatable Restraint Sensing and Diagnostic Module
U0155 00	Lost Communication With Instrument Cluster
U0158 00	Lost Communication With Head-Up Display
U0159 00	Lost Communication With Parking Assist Control Module
U0160 00	Lost Communication With Chime Alarm Control Module
U0164 00	Lost Communication with HVAC Control Module
U0166 00	Lost Communication with Auxiliary Heater Control Module
U0167 00	Lost Communication with Immobiliser Control Module
U0168 00	Lost Communication With Keyless Entry Control Module
U016B 00	Lost Communication with Electric A/C Compressor Control Module
U0170 00	Lost Communication With Passenger Presence Detection Sensor Module
U0181 00	Lost Communication With Headlamp Levelling Control Module
U0182 00	Lost Communication With Lighting Control Module - Front
U0184 00	Lost Communication With Radio
U0186 00	Lost Communication With Speaker Amplifier Module
U0196 00	Lost Communication With Rear Audio Control Module
U0191 00	Lost Communication With Television
U0193 00	Lost Communication With Digital Radio Receiver Control Module
U0197 00	Lost Communication With Telephone Control Module
U0198 00	Lost Communication With Telematic Control Module
U0201 00	Lost Communication With Transfer Case Control Module

U0203 00	Lost Communication With Left Rear Door Switch Panel Control Module
U0204 00	Lost Communication With Right Rear Door Switch Panel Control Module
U0207 00	Lost Communication With Movable Roof Control Module
U0208 00	Lost Communication With Memory Seat Control Module
U0209 00	Lost Communication With Front Seat Heating Control Module
U0210 00	Lost Communication With Rear Seat Heating Control Module
U0230 00	Lost Communication With Liftgate Control Module
U0232 00	Lost Communication With Side-Object Detection Control Module - Left
U0233 00	Lost Communication With Side-Object Detection Control Module - Right
U0236 00	Lost Communication With Steering Column Lock Module
U0237 00	Lost Communication With Multimedia Player Interface Module
U023A 00	Lost Communication With Vehicle Direction Camera Control Module
U0249 00	Lost Communication With Rear Radio Audio Control Module
U0252 00	Lost Communication With Trailer Interface Control Module
U0254 00	Lost Communication With Remote Start Module
U0255 00	Lost Communication With Info Display Module
U0256 00	Lost Communication With Infotainment Faceplate Control Module
U0257 00	Lost Communication With Info Display Module/Infotainment Faceplate Control Module
U0264 00	Lost Communication With Camera Module - Rear
U0284 00	Lost Communication with Active Grille Air Shutter 1 Motor Module
U0285 00	Lost Communication with Active Grille Air Shutter 2 Motor Module
U0293 00	Lost Communication with Hybrid Powertrain Control Module
U0301 00	Software Incompatibility with Engine Control Module
U0302 00	Software Incompatibility with Transmission Control Module
U0315 00	Software Incompatibility with Electronic Brake Control Module
U0401 00	Invalid Data Received from ECM
U0401 72	Invalid Data Received from ECM Message Counter Incorrect
U0401 74	Invalid Data Received from ECM Bus Signal Checksum Error
U0402 72	Invalid Data Received From Transmission Control Module Message Counter Incorrect
U0402 73	Invalid Data Received From Transmission Control Module Parity Error
U0402 74	Invalid Data Received From Transmission Control Module Bus Signal Checksum Error
U0405 00	Invalid Data Received From Cruise Control Module
U0405 71	Invalid Data Received From Cruise Control Module Invalid Data
U0405 72	Invalid Data Received From Cruise Control Module Message Counter Incorrect

U0405 74	Invalid Data Received From Cruise Control Module Bus Signal Checksum Error
U0415 00	Invalid Data Received From Electronic Brake Control Module
U0415 72	Invalid Data Received From Electronic Brake Control Module Message Counter Incorrect
U0415 74	Invalid Data Received From Electronic Brake Control Module Bus Signal Checksum Error
U0416 00	Invalid Data Received From Vehicle Dynamics Control Module
U0416 72	Invalid Data Received From Vehicle Dynamics Control Module Message Counter Incorrect
U0416 74	Invalid Data Received From Vehicle Dynamics Control Module Bus Signal Checksum Error
U0418 00	Invalid Data Received From Brake System Control Module
U0418 71	Invalid Data Received From Brake System Control Module Invalid Data
U0418 72	Invalid Data Received From Brake System Control Module Message Counter Incorrect
U0418 74	Invalid Data Received From Brake System Control Module Bus Signal Checksum Error
U0422 00	Invalid Data Received From Body Control Module
U0422 70	Invalid Data Received From Body Control Module
U0422 72	Invalid Data Received From Body Control Module Message Counter Incorrect
U0422 74	Invalid Data Received From Body Control Module Bus Signal Checksum Error
U0424 00	Invalid Data Received From HVAC Control Module
U0432 00	Invalid Data Received From Multi-axis Acceleration Sensor Module
U0432 72	Invalid Data Received From Multi-axis Acceleration Sensor Module Message Counter Incorrect
U0432 74	Invalid Data Received From Multi-axis Acceleration Sensor Module Bus Signal Checksum Error
U0438 71	Invalid Data Received From Trailer Brake Control Module
U0465 00	Invalid Data Received From Power Take-Off Control Module
U1501 00	LIN Bus 1
U1502 00	LIN Bus 2
U1510 00	(K9 Body Control Module) LIN Bus 1 Lost Communication With Device 0 (B165 Intrusion Sensor Module)
	(K33 HVAC Control Module) LIN Bus 1 Lost Communication With Device 0 (A26 HVAC Control)
	(A11 Radio) LIN Bus 1 Lost Communication with Device 0 (A20 Radio/HVAC Control)
U1511 00	(K26 Headlamp Control Module) LIN Bus 1 Lost Communication With Device 1 (E13L Headlamp Assembly-Left)
U1512 00	(K26 Headlamp Control Module) LIN Bus 1 Lost Communication With Device 2 (E13R Headlamp Assembly-Right)
U1513 00	(K26 Headlamp Control Module) LIN Bus 1 Lost Communication With Device 3 (E13L Headlamp Assembly-Left)
U1514 00	(K26 Headlamp Control Module) LIN Bus 1 Lost Communication With Device 4 (E13R Headlamp Assembly-Right)
U1515 00	(K9 Body Control Module) LIN Bus 1 Lost Communication With Device 5 (M75 Windscreen Wiper Motor)
U1516 00	(K9 Body Control Module) LIN Bus 1 Lost Communication With Device 6 (B110 Battery Sensor Module)
U1517 00	(K9 Body Control Module) LIN Bus 1 Lost Communication With Device 7 (Sunroof Sunshade Module)
U1519 00	(K40 Seat Memory Control Module) LIN Bus 1 Lost Communication With Device 9 (S52 Outside Rearview Mirror Switch)

	(K40 Seat Memory Control Module) LIN Bus 1 Lost Communication With Device 9 (K96 Mirror Control Module)
U151A 00	(K9 Body Control Module) LIN Bus 1 Lost Communication With Device 10 (B117 Windscreen Outside Moisture Sensor)
U151B 00	(K9 Body Control Module) LIN Bus 1 Lost Communication With Device 11 (K61 Sunroof Control Module)
	(K40 Seat Memory Control Module) LIN Bus 1 Lost Communication With Device 11 (S79P Window Switch - Passenger)
U1520 00	(K9 Body Control Module) LIN Bus 2 Lost Communication With Device 0 (P25 Power Sounder Content Theft Deterrent Alarm Module)
U1521 00	(K26 Headlamp Control Module) LIN Bus 2 Lost Communication With Device 1 (E13L Headlamp Assembly-Left)
U1522 00	(K9 Body Control Module) LIN Bus 2 Lost Communication With Device 2 (K65 Tyre Pressure Indicator Module)
	(K26 Headlamp Control Module) LIN Bus 2 Lost Communication With Device 2 (E13R Headlamp Assembly-Right)
U1523 00	(K26 Headlamp Control Module) LIN Bus 2 Lost Communication With Device 3 (E13L Headlamp Assembly-Left)
U1524 00	(K9 Body Control Module) LIN Bus 2 Lost Communication With Device 4 (Front Seat Heating Control Module)
	(K26 Headlamp Control Module) LIN Bus 2 Lost Communication With Device 4 (E13R Headlamp Assembly-Right)
U1526 00	(K9 Body Control Module) LIN Bus 2 Lost Communication With Device 6 (Rear Seat Heating Control Module)
U152C 00	(K9 Body Control Module) LIN Bus 2 Lost Communication With Device 12 (K18 Electronic Compass Module)
U152D 00	(K9 Body Control Module) LIN Bus 2 Lost Communication With Device 13 (S3 Automatic Gearbox Change Lever)
U1530 00	(K9 Body Control Module) LIN Bus 3 Lost Communication With Device 0 (M74P Window Motor - Passenger)
U1534 00	(K9 Body Control Module) LIN Bus 3 Lost Communication With Device 4 (M74D Window Motor - Driver)
U1538 00	(K9 Body Control Module) LIN Bus 3 Lost Communication With Device 8 (S79D Window Switch - Driver)
U153A 00	(K9 Body Control Module) LIN Bus 3 Lost Communication With Device 10 (S79P Window Switch - Passenger)
U1540 00	(K9 Body Control Module) LIN Bus 4 Lost Communication With Device 0 (M74RR Window Motor - Right Rear)
U1544 00	(K9 Body Control Module) LIN Bus 4 Lost Communication With Device 4 (M74LR Window Motor - Left Rear)
U1548 00	(K9 Body Control Module) LIN Bus 4 Lost Communication With Device 8 (S79LR Window Switch - Right Rear)
U154A 00	(K9 Body Control Module) LIN Bus 4 Lost Communication With Device 10 (S79RR Window Switch - Left Rear)
U154B 00	(K9 Body Control Module) LIN Bus 4 Lost Communication With Device 11 (K49 Rear Seat Control Module)
U1793 00	14V Power Module Lost Communication with Hybrid Powertrain Control Module on Powertrain Expansion Communication Bus
U1795 00	14V Power Module Powertrain Expansion Communication Bus Off
U179A 00	Lost Communication with Hybrid Powertrain Control Module 2
U1803 00	Lost Communication with Hybrid Powertrain Control Module 2
U1806 00	Battery Energy Control Module High Voltage Energy Management Communication Bus Off
U1807 00	Battery Charger Control Module High Voltage Energy Management Communication Bus Off
U180A 00	Electric A/C Compressor Control Module High-Speed Communication Bus Off
U180B 00	Battery Energy Control Module High-Speed Communication Bus Off
U180C 00	Battery Charger Control Module High-Speed Communication Bus Off
U180D 00	Electronic Brake Control Module Chassis Expansion Communication Bus Off
U1811 00	Battery Energy Control Module Powertrain Expansion CAN Bus Off

U1814 01	Powertrain Wake Up Communication Circuit Short to Battery
U1814 02	Powertrain Wake Up Communication Circuit Short to Ground
U1814 04	Powertrain Wake Up Communication Circuit Open
U1815 00	Lost Communication with Drive Motor Control Module A on Powertrain Expansion Communication Bus
U1816 00	Lost Communication with Drive Motor Control Module B on Powertrain Expansion Communication Bus
U1817 00	Lost Communication with Hybrid Powertrain Control Module on Powertrain Expansion Communication Bus
U1818 00	Lost Communication with Engine Control Module on Powertrain Expansion Communication Bus
U1821 00	Lost Communication with 14V Power Module on Powertrain Expansion Communication Bus
U1826 00	Lost Communication With Multi-Axis Acceleration Sensor Module on Bus B (Chassis Expansion Bus)
U1827 00	Lost Communication With Steering Angle Sensor Module on Bus B (Chassis Expansion Bus)
U182D 00	Lost Communication with Hybrid Powertrain Control Module 2 on Powertrain Expansion Communication Bus
U182E 00	Drive Motor Control Module 1 Lost Communication with Hybrid Powertrain Control Module 2 on Powertrain Expansion Communication Bus
U182F 00	Drive Motor Control Module 2 Lost Communication with Hybrid Powertrain Control Module 2 on Powertrain Expansion Communication Bus
U1831 00	Drive Motor Control Module A Lost Communication with Hybrid Powertrain Control Module on Powertrain Expansion CAN Bus
U1833 00	Lost Communication with Electronic Brake Control Module on Chassis Expansion Communication Bus
U1838 00	Lost Communication with Battery Charger Control Module on High Voltage Energy Management Communication Bus
U1839 00	Auxiliary Transmission Fluid Pump Control Module Lost Communication with Engine Control Module
U183A 00	Lost Communication with OnStar Module
U183B 00	Auxiliary Transmission Fluid Pump Control Module Lost Communication with Transmission Control Module
U183C 00	Auxiliary Transmission Fluid Pump Control Module Lost Communication with Hybrid Powertrain Control Module 2 on Powertrain Expansion Communication Bus
U183E 00	Lost Communication with OnStar Module on Low Speed Communication Bus
U1844 00	Battery Energy Control Module Lost Communication with Hybrid Powertrain Control Module on Powertrain Expansion Communication Bus
U1845 00	Drive Motor Control Module 1 Lost Communication with Hybrid Powertrain Control Module
U1846 00	Drive Motor Control Module 2 Lost Communication with Hybrid Powertrain Control Module
U1849 00	Drive Motor Control Module 1 Lost Communication with Transmission Control Module
U184B 00	Lost Communication with Electronic Climate Control Module on Low Speed Communication Bus
U184C 00	Lost Communication with Instrument Cluster on Low Speed Communication Bus
U184D 00	Lost Communication with Radio on Low Speed Communication Bus
U184E 00	Lost Communication with Inflatable Restraint Sensing and Diagnostic Module on Low Speed Communication Bus
U184F 00	Electric A/C Compressor Control Module Lost Communication with Engine Control Module
U1850 00	Drive Motor Control Module 2 Lost Communication with Transmission Control Module
U1858 00	Electronic Brake Control Module Lost Communication with Hybrid Powertrain Control Module on Chassis Expansion Communication Bus
U185A 00	Lost Communication with Battery Energy Control Module on High Voltage Energy Management Communication Bus
U185B 00	Battery Energy Control Module Lost Communication with Hybrid Powertrain Control Module 2 on High Voltage Energy Management Communication Bus

U185C 00	Battery Charger Control Module Lost Communication with Hybrid Powertrain Control Module 2 on High Voltage Energy Management Communication Bus
U185D 00	Fuel Injector Control Module Lost Communication with Engine Control Module
U185E 00	Fuel Injector Control Module Lost Communication with Body Control Module
U1860 00	Electric A/C Compressor Control Module Lost Communication with Hybrid Powertrain Control Module 2
U1861 00	Battery Charger Control Module Lost Communication with Engine Control Module
U186A 00	Electronic Brake Control Module Lost Communication with Engine Control Module
U186A 00	Electronic Brake Control Module Lost Communication with Transmission Control Module
U1876 00	Drive Motor Control Module 1 Lost Communication with Engine Control Module
U1879 00	Drive Motor Control Module 2 Lost Communication with Engine Control Module
U1885 00	Battery Energy Control Module Lost Communication with Hybrid Powertrain Control Module
U1886 00	Battery Energy Control Module Lost Communication with Engine Control Module
U1888 00	Hybrid Powertrain Control Module Lost Communication with Battery Energy Control Module
U18B9 00	Primary High Speed CAN Bus Subnet Configuration List
U18BF 00	Secondary High Speed CAN Bus Subnet Configuration List
U1900 00	Lost Communication With Speech to Text Interface Module
U1901 00	Lost Communication With Front Controls Multifunction Interface Module
U2099 00	High Speed Communication Enable Circuit
U2099 01	High Speed Communication Enable Circuit Short to Battery
U2099 02	High Speed Communication Enable Circuit Short to Ground
U2099 04	High Speed Communication Enable Circuit Open
U2099 5A	High Speed Communication Enable Circuit Not Plausible
U2100 00	CAN Bus Communication
U2101 00	CAN Bus Maximum Configuration List
U2103 00	Fewer Controllers On Bus Than Programmed
U2105 00	Lost Communication with Engine Control Module
U2106 00	Lost Communication with Transmission Control Module
U2107 00	Lost Communication with Body Control Module
U2108 00	Lost Communication with Electronic Brake Control Module
U2127 00	Lost Communication with Front HVAC Control Module
U2139 00	Lost Communication with Column Integrated Module
U2144 00	Lost Communication with Distance Sensing Cruise Control Module
U2176 00	Lost Communication with Power Take-Off Control Module
U2178 00	Lost Communication With Trailer Interface Control Module
U2400 00	Fuel Injector Control Module High Speed CAN Bus Off

U2401 00	Battery Energy Control Module Dedicated Bus 1 Off
U2602 00	Battery Energy Control Module Lost Communication with Hybrid Powertrain Control Module 2
U2603 00	Battery Energy Control Module Lost Communication with Hybrid Battery Interface Control Module 1
U2604 00	Battery Energy Control Module Lost Communication with Hybrid Battery Interface Control Module 2
U2605 00	Battery Energy Control Module Lost Communication with Hybrid Battery Interface Control Module 3
U2606 00	Battery Energy Control Module Lost Communication with Hybrid Battery Interface Control Module 4
U2608 00	Electric A/C Compressor Control Module Lost Communication with Hybrid Powertrain Control Module
U2609 00	Battery Charger Control Module Lost Communication with Hybrid Powertrain Control Module
U2611 00	Auxiliary Transmission Fluid Pump Control Module Lost Communication with Hybrid Powertrain Control Module
U2612 00	Battery Charger Control Module Lost Communication with Hybrid Powertrain Control Module 2

© Copyright Chevrolet. All rights reserved

DTC B1000

Diagnostic Instructions

- Perform the Diagnostic System Check - Vehicle prior to using this diagnostic procedure.
- Review Strategy Based Diagnosis for an overview of the diagnostic approach.
- Diagnostic Procedure Instructions provides an overview of each diagnostic category.

DTC Descriptors

DTC B1000 00: Electronic Control Unit

DTC B1000 08: Electronic Control Unit Performance - Signal Invalid

DTC B1000 0F: Electronic Control Unit Signal Erratic

DTC B1000 12: Electronic Control Unit Low Input

DTC B1000 2B: Electronic Control Unit Missing Reference

DTC B1000 34: Electronic Control Unit RAM Malfunction

DTC B1000 35: Electronic Control Unit ROM Malfunction

DTC B1000 36: Electronic Control Unit EEPROM Performance/Malfunction

DTC B1000 37: Electronic Control Unit Software Malfunction

DTC B1000 38: Electronic Control Unit Supervision Software Malfunction

DTC B1000 39: Electronic Control Unit Internal Malfunction

DTC B1000 43: Electronic Control Unit EEPROM Incorrect Programming

DTC B1000 46: Electronic Control Unit Configuration Not Programmed

DTC B1000 4A: Electronic Control Unit Programming Checksum Error

DTC B1000 56: Electronic Control Unit Too Many Transitions

DTC B1000 73: Electronic Control Unit Parity Error

DTC B1000 F0: Electronic Control Unit

DTC B1000 F1: Electronic Control Unit

DTC B1000 F2: Electronic Control Unit

DTC B1000 F3: Electronic Control Unit

Circuit/System Description

The internal fault detection is handled inside the control module. The symptom byte listed in the DTC Descriptor is for engineering reference only. No external circuit diagnosis is involved.

Conditions for Running the DTC

The module runs the program to detect an internal fault when power up is commanded. The only requirements are voltage and ground. This program runs even if the voltage is out of the valid operating range.

Conditions for Setting the DTC

The module has detected an internal malfunction.

Action Taken When the DTC Sets

The module refuses all additional inputs.

Conditions for Clearing the DTC

- A current DTC clears when the malfunction is no longer present.
- A history DTC clears when the module ignition cycle counter reaches the reset threshold of 50, without a repeat of the malfunction.

Diagnostic Aids

- This DTC may be stored as a history DTC without affecting the operation of the module.
- If stored only as a history DTC and not retrieved as a current DTC, do not replace the module.
- If this DTC is retrieved as both a current and history DTC, replace the module that set the DTC.

Circuit/System Verification

If this DTC is retrieved as a current DTC, replace the module that set the DTC.

Repair Instructions

Perform the Diagnostic Repair Verification after completing the repair.

Control Module References for module replacement, setup, and programming

&#169© Copyright Chevrolet. All rights reserved

DTC B1001

Diagnostic Instructions

- Perform the Diagnostic System Check - Vehicle prior to using this diagnostic procedure.
- Review Strategy Based Diagnosis for an overview of the diagnostic approach.
- Diagnostic Procedure Instructions provides an overview of each diagnostic category.

DTC Descriptor

DTC B1001 00: Option Configuration

DTC B1001 33: Option Configuration Special Memory Malfunction

DTC B1001 45: Option Configuration Variant Not Programmed

DTC B1001 4B: Option Configuration Calibration Not Learned

Circuit/System Description

Some control modules must be configured with serial numbers, vehicle options, or other information. If a control module was not properly configured after installation that module may set DTC B1001. The symptom byte listed in the DTC Descriptor is for engineering reference only. No external circuit diagnosis is involved.

Conditions for Running the DTC

Battery voltage is between 9-16 V and data link communications operate normally.

Conditions for Setting the DTC

The control module is not configured properly.

Conditions for Clearing the DTC

- A current DTC clears when the malfunction is no longer present.
- A history DTC clears when the module ignition cycle counter reaches the reset threshold, without a repeat of the malfunction.

Reference Information

Schematic Reference

Data Communication Schematics

Connector End View Reference

Component Connector End Views

Description and Operation

Data Link Communications Description and Operation

Electrical Information Reference

- Circuit Testing
- Connector Repairs
- Testing for Intermittent Conditions and Poor Connections
- Wiring Repairs

Scan Tool References

Control Module References for scan tool information

Circuit/System Verification

Verify DTC B1001 is not set.

If the DTC is set, program the control module. If the DTC resets, replace the control module.

Repair Instructions

Perform the Diagnostic Repair Verification after completing the diagnostic procedure.

Control Module References for control module replacement, setup, and programming

&#169© Copyright Chevrolet. All rights reserved

DTC B1016

Diagnostic Instructions

- Perform the Diagnostic System Check - Vehicle prior to using this diagnostic procedure.
- Review Strategy Based Diagnosis for an overview of the diagnostic approach.
- Diagnostic Procedure Instructions provides an overview of each diagnostic category.

DTC Descriptor

DTC B1016 XX: Vehicle Identification Number Information Not Programmed

Circuit/System Description

The control module performs a self test and vehicle identification number (VIN) verification. This DTC indicates that a VIN is not programmed or that the control module has an internal fault. The internal fault detection is handled inside the control module, no external circuits are involved.

Conditions for Running the DTC

The only requirements are voltage and ground.

Conditions for Setting the DTC

The control module has detected that the VIN is not programmed.

Conditions for Clearing the DTC

- The condition for setting the DTC is no longer present.
- The history DTC will clear after 50 fault-free ignition cycles.
- The DTC can be cleared using a scan tool.

Circuit/System Verification

Verify DTC B1016 is not set.

If the DTC is set, program the control module. If the DTC resets, replace the control module.

Repair Instructions

Perform the Diagnostic Repair Verification after completing the diagnostic procedure.

Control Module References for control module replacement, setup, and programming

&#169© Copyright Chevrolet. All rights reserved

DTC B101D

Diagnostic Instructions

- Perform the Diagnostic System Check - Vehicle prior to using this diagnostic procedure.
- Review Strategy Based Diagnosis for an overview of the diagnostic approach.
- Diagnostic Procedure Instructions provides an overview of each diagnostic category.

DTC Descriptor

DTC B101D 00: Electronic Control Unit Hardware

DTC B101D 04: Electronic Control Unit Hardware Open

DTC B101D 08: Electronic Control Unit Hardware Performance - Signal Invalid

DTC B101D 0F: Electronic Control Unit Hardware Signal Erratic

DTC B101D 12: Electronic Control Unit Hardware Low Input

DTC B101D 13: Electronic Control Unit Hardware Low Voltage/High Temperature

DTC B101D 14: Electronic Control Unit Hardware High Voltage/Low Temperature

DTC B101D 1A: Electronic Control Unit Hardware Performance - Bias Level Out of Range

DTC B101D 2B: Electronic Control Unit Hardware Missing Reference

DTC B101D 2C: Electronic Control Unit Hardware

DTC B101D 31: Electronic Control Unit Hardware Internal Checksum Error

DTC B101D 32: Electronic Control Unit Hardware General Memory Malfunction

DTC B101D 34: Electronic Control Unit Hardware RAM Malfunction

DTC B101D 35: Electronic Control Unit Hardware ROM Malfunction

DTC B101D 36: Electronic Control Unit Hardware EEPROM Performance/Malfunction

DTC B101D 37: Electronic Control Unit Hardware Software Malfunction

DTC B101D 38: Electronic Control Unit Hardware Supervision Software Malfunction

DTC B101D 39: Electronic Control Unit Hardware Internal Malfunction

DTC B101D 3A: Electronic Control Unit Hardware Incorrect Component Installed

DTC B101D 3B: Electronic Control Unit Hardware Self-Test Malfunction

DTC B101D 3C: Electronic Control Unit Hardware Internal Communication Malfunction

DTC B101D 43: Electronic Control Unit Hardware EEPROM Incorrect Programming

DTC B101D 73: Electronic Control Unit Hardware Parity Error

DTC B101D F0: Electronic Control Unit Hardware

DTC B101D F1: Electronic Control Unit Hardware

Circuit/System Description

The internal fault detection is handled inside the control module. The symptom byte listed in the DTC Descriptor is for engineering reference only. No external circuit diagnosis is involved.

Conditions for Running the DTC

- The control module runs the program to detect an internal fault when power up is commanded. The only requirements are voltage and ground. This program runs even if the voltage is out of the valid operating range.
- The keyless entry control module will set this DTC with symptom byte 39 when the keyless entry control module antenna is activated.

Conditions for Setting the DTC

The control module has detected an internal malfunction.

Action Taken When the DTC Sets

The control module refuses all additional inputs.

Conditions for Clearing the DTC

- A current DTC clears when the malfunction is no longer present.
- A history DTC clears when the control module ignition cycle counter reaches the reset threshold of 50, without a repeat of the malfunction.

Diagnostic Aids

- This DTC may be stored as a history DTC without affecting the operation of the control module.
- Do not replace a control module based only on DTC B101D being set in history with the exception of the following control modules:
  - K36 Inflatable Restraint Sensing and Diagnostic Module (SDM)
  - K85 Passenger Presence Detection Module
- If DTC B101D is set as current, replace the appropriate control module.

Circuit/System Verification

Verify that DTC B101D is not set.

If the DTC is set with symptom byte 43, program the control module that set the DTC. If the DTC resets, replace the control module that set the DTC.
If the DTC is set with other symptom bytes, replace the control module that set the DTC.

Repair Instructions

Perform the Diagnostic Repair Verification after completing the repair.

Control Module References for control module replacement, setup, and programming

&#169© Copyright Chevrolet. All rights reserved

DTC B101E

Diagnostic Instructions

- Perform the Diagnostic System Check - Vehicle prior to using this diagnostic procedure.
- Review Strategy Based Diagnosis for an overview of the diagnostic approach.
- Diagnostic Procedure Instructions provides an overview of each diagnostic category.

DTC Descriptor

DTC B101E 00: Electronic Control Unit Software

DTC B101E 31: Electronic Control Unit Software Internal Checksum Error

DTC B101E 32: Electronic Control Unit Software General Memory Malfunction

DTC B101E 41: Electronic Control Unit Software Not Programmed

DTC B101E 42: Electronic Control Unit Software Calibration Not Programmed

DTC B101E 43: Electronic Control Unit Software EEPROM Incorrect Programming

DTC B101E 44: Electronic Control Unit Software Security Access Not Activated

DTC B101E 45: Electronic Control Unit Software Variant Not Programmed

DTC B101E 46: Electronic Control Unit Software Configuration Not Programmed

DTC B101E 47: Electronic Control Unit Software VIN Not Programmed

DTC B101E 48: Electronic Control Unit Software Security Code Not Programmed

DTC B101E 4A: Electronic Control Unit Software Programming Checksum Error

DTC B101E 4B: Electronic Control Unit Software Calibration Not Learned

DTC B101E 4C: Electronic Control Unit Software DTC Memory Full

Circuit/System Description

Some control modules must be configured with specific software, serial numbers, vehicle options, or other information. If a control module was not properly configured after installation that module may set DTC B101E. The symptom byte listed in the DTC Descriptor is for engineering reference only. No external circuit diagnosis is involved.

Conditions for Running the DTC

Battery voltage is between 9-16 V and data link communications operate normally.

Conditions for Setting the DTC

The control module is not configured properly.

Conditions for Clearing the DTC

- A current DTC clears when the malfunction is no longer present.
- A history DTC clears when the module ignition cycle counter reaches the reset threshold, without a repeat of the malfunction.

Reference Information

Schematic Reference

Data Communication Schematics

Connector End View Reference

Component Connector End Views

Description and Operation

Data Link Communications Description and Operation

Electrical Information Reference

- Circuit Testing
- Connector Repairs
- Testing for Intermittent Conditions and Poor Connections
- Wiring Repairs

Scan Tool References

Control Module References for scan tool information

Circuit/System Verification

Verify DTC B101E is not set.

If the DTC is set, program the control module. If the DTC resets, replace the control module.

Repair Instructions

Perform the Diagnostic Repair Verification after completing the diagnostic procedure.

Control Module References for control module replacement, setup, and programming

&#169© Copyright Chevrolet. All rights reserved

DTC C0550

Diagnostic Instructions

- Perform the Diagnostic System Check - Vehicle prior to using this diagnostic procedure.
- Review Strategy Based Diagnosis for an overview of the diagnostic approach.
- Diagnostic Procedure Instructions provides an overview of each diagnostic category.

DTC Descriptors

DTC C0550 00: Electronic Control Unit

DTC C0550 35: Electronic Control Unit ROM Malfunction

DTC C0550 39: Electronic Control Unit Internal Malfunction

DTC C0550 43: Electronic Control Unit EEPROM Incorrect Programming

Circuit/System Description

The internal fault detection is handled inside the control module. The symptom byte listed in the DTC Descriptor is for engineering reference only. No external circuit diagnosis is involved.

Conditions for Running the DTC

The module runs the program to detect an internal fault when power up is commanded. The only requirements are voltage and ground. This program runs even if the voltage is out of the valid operating range.

Conditions for Setting the DTC

The module has detected an internal malfunction.

Action Taken When the DTC Sets

The module refuses all additional inputs.

Conditions for Clearing the DTC

- A current DTC clears when the malfunction is no longer present.
- A history DTC clears when the module ignition cycle counter reaches the reset threshold of 50, without a repeat of the malfunction.

Diagnostic Aids

- This DTC may be stored as a history DTC without affecting the operation of the module.
- If stored only as a history DTC and not retrieved as a current DTC, do not replace the module.
- If this DTC is retrieved as both a current and history DTC, replace the module that set the DTC.

Circuit/System Verification

1. Verify that DTC B1325, B1330, B1370, B1380, B1424, B1440, B1441, B1517, C0800, C0899, C12E1, P0560, or P0562 is not set.
   If any of the DTCs are set, refer to Diagnostic Trouble Code (DTC) List - Vehicle .
2. Verify that DTC C0550 is not set.
   If the DTC is set with symptom byte 39 or 43, program the control module that set the DTC. If the DTC resets, replace the control module that set the DTC.
   If the DTC is set with other symptom bytes, replace the control module that set the DTC.

Repair Instructions

Perform the Diagnostic Repair Verification after completing the repair.

Control Module References for module replacement, setup, and programming

&#169© Copyright Chevrolet. All rights reserved

DTC C056D

Diagnostic Instructions

- Perform the Diagnostic System Check - Vehicle prior to using this diagnostic procedure.
- Review Strategy Based Diagnosis for an overview of the diagnostic approach.
- Diagnostic Procedure Instructions provides an overview of each diagnostic category.

DTC Descriptor

DTC C056D 00: Electronic Control Unit Hardware

DTC C056D 0F: Electronic Control Unit Hardware Signal Erratic

DTC C056D 18: Electronic Control Unit Hardware Low Signal Amplitude

DTC C056D 31: Electronic Control Unit Hardware Internal Checksum Error

DTC C056D 32: Electronic Control Unit Hardware General Memory Malfunction

DTC C056D 33: Electronic Control Unit Hardware Special Memory Malfunction

DTC C056D 34: Electronic Control Unit Hardware RAM Malfunction

DTC C056D 35: Electronic Control Unit Hardware ROM Malfunction

DTC C056D 36: Electronic Control Unit Hardware EEPROM Performance/Malfunction

DTC C056D 37: Electronic Control Unit Hardware Software Malfunction

DTC C056D 39: Electronic Control Unit Hardware Internal Malfunction

DTC C056D 3A: Electronic Control Unit Hardware Incorrect Component Installed

DTC C056D 3B: Electronic Control Unit Hardware Self-Test Malfunction

DTC C056D 3C: Electronic Control Unit Hardware Internal Communication Malfunction

DTC C056D 43: Electronic Control Unit Hardware EEPROM Incorrect Programming

Circuit/System Description

The internal fault detection is handled inside the control module. The symptom byte listed in the DTC Descriptor is for engineering reference only. No external circuit diagnosis is involved.

Conditions for Running the DTC

The module runs the program to detect an internal fault when power up is commanded. The only requirements are voltage and ground. This program runs even if the voltage is out of the valid operating range.

Conditions for Setting the DTC

The module has detected an internal malfunction.

Action Taken When the DTC Sets

The module refuses all additional inputs.

Conditions for Clearing the DTC

- A current DTC clears when the malfunction is no longer present.
- A history DTC clears when the module ignition cycle counter reaches the reset threshold of 50, without a repeat of the malfunction.

Diagnostic Aids

- This DTC may be stored as a history DTC without affecting the operation of the module.
- If stored only as a history DTC and not retrieved as a current DTC, do not replace the module.
- If this DTC is retrieved as both a current and history DTC, replace the module that set the DTC.

Circuit/System Verification

Verify that DTC C056D is not set.

If the DTC is set in a control module that can be programmed, program the control module. If the DTC resets, replace the control module that set the DTC.
If the DTC is set in a control module that cannot be programmed, replace the control module that set the DTC.
If the DTC is set in a sensor, replace the sensor that set the DTC.

Repair Instructions

Perform the Diagnostic Repair Verification after completing the diagnostic procedure.

Control Module References for module replacement, programming and setup

&#169© Copyright Chevrolet. All rights reserved

DTC C056E

Diagnostic Instructions

- Perform the Diagnostic System Check - Vehicle prior to using this diagnostic procedure.
- Review Strategy Based Diagnosis for an overview of the diagnostic approach.
- Diagnostic Procedure Instructions provides an overview of each diagnostic category.

DTC Descriptor

DTC C056E 00: Electronic Control Unit Software

DTC C056E 38: Electronic Control Unit Software Supervision Software Malfunction

DTC C056E 41: Electronic Control Unit Software Not Programmed

DTC C056E 42: Electronic Control Unit Software Calibration Not Programmed

DTC C056E 43: Electronic Control Unit Software EEPROM Incorrect Programming

DTC C056E 45: Electronic Control Unit Software Variant Not Programmed

DTC C056E 46: Electronic Control Unit Software Configuration Not Programmed

DTC C056E 47: Electronic Control Unit Software VIN Not Programmed

DTC C056E 48: Electronic Control Unit Software Security Code Not Programmed

DTC C056E 4A: Electronic Control Unit Software Programming Checksum Error

DTC C056E 4B: Electronic Control Unit Software Calibration Not Learned

DTC C056E 5A: Electronic Control Unit Software Not Plausible

DTC C056E 71: Electronic Control Unit Software Invalid Data

Circuit/System Description

Some control modules must be configured with specific software, serial numbers, vehicle options, or other information. If a control module was not properly configured after installation that module may set DTC C056E. The symptom byte listed in the DTC Descriptor is for engineering reference only. No external circuit diagnosis is involved.

Conditions for Running the DTC

Battery voltage is between 9-16 V and data link communications operate normally.

Conditions for Setting the DTC

The control module is not configured properly.

Conditions for Clearing the DTC

- A current DTC clears when the malfunction is no longer present.
- A history DTC clears when the module ignition cycle counter reaches the reset threshold, without a repeat of the malfunction.

Reference Information

Schematic Reference

Data Communication Schematics

Connector End View Reference

Component Connector End Views

Description and Operation

Data Link Communications Description and Operation

Electrical Information Reference

- Circuit Testing
- Connector Repairs

- Testing for Intermittent Conditions and Poor Connections
- Wiring Repairs

Scan Tool References

Control Module References for scan tool information

Circuit/System Verification

Verify DTC C056E is not set.

If the DTC is set in a control module, program the control module. If the DTC resets, replace the control module that set the DTC.
If the DTC is set in a sensor, program the sensor. If the DTC resets, replace the sensor that set the DTC.

Repair Instructions

Perform the Diagnostic Repair Verification after completing the diagnostic procedure.

Control Module References for control module replacement, setup, and programming

&#169© Copyright Chevrolet. All rights reserved

DTC C078A

Diagnostic Instructions

- Perform the Diagnostic System Check - Vehicle prior to using this diagnostic procedure.
- Review Strategy Based Diagnosis for an overview of the diagnostic approach.
- Diagnostic Procedure Instructions provides an overview of each diagnostic category.

DTC Descriptors

DTC C078A 39: Tire Pressure Indicator Module Internal Malfunction

Circuit/System Description

The internal fault detection is handled inside the tyre pressure indicator module. No external circuit diagnosis is involved.

Conditions for Running the DTC

The control module runs the program to detect an internal fault when power up is commanded. The only requirements are voltage and ground. This program runs even if the voltage is out of the valid operating range.

Conditions for Setting the DTC

The control module has detected an internal malfunction.

Action Taken When the DTC Sets

The control module refuses all additional inputs.

Conditions for Clearing the DTC

- A current DTC clears when the malfunction is no longer present.

- A history DTC clears when the control module ignition cycle counter reaches the reset threshold of 50, without a repeat of the malfunction.

Diagnostic Aids

- This DTC may be stored as a history DTC without affecting the operation of the control module.
- If stored only as a history DTC and not retrieved as a current DTC, do not replace the control module.
- If this DTC is retrieved as both a current and history DTC, replace the tire pressure indicator module.

Circuit/System Verification

Verify that DTC C078A is not set.

If the DTC is set, replace the K65 tire pressure indicator module.

Repair Instructions

Perform the Diagnostic Repair Verification after completing the repair.

Control Module References for control module replacement, setup, and programming

&#169© Copyright Chevrolet. All rights reserved

DTC P0601-P0604, P0606, or P062F

Diagnostic Instructions

- Perform the Diagnostic System Check - Vehicle prior to using this diagnostic procedure.
- Review Strategy Based Diagnosis for an overview of the diagnostic approach.
- Diagnostic Procedure Instructions provides an overview of each diagnostic category.

DTC Descriptors

DTC P0601 00: Control Module Read Only Memory Performance

DTC P0602 00: Control Module Not Programmed

DTC P0603 00: Control Module Long Term Memory Reset

DTC P0604 00: Control Module Random Access Memory Performance

DTC P0606 00: Control Module Processor Performance

DTC P062F 00: Control Module Long Term Memory Performance

Circuit/System Description

This diagnostic applies to internal microprocessor integrity conditions within the control module. This diagnostic also addresses if the control module is not programmed. The control module monitors its ability to read and write to the memory. It also monitors a timing function. No external circuits are involved.

Conditions for Running the DTC

- Vehicle ON.
- The system voltage is at least 7 V.

Conditions for Setting the DTC

The control module detects an internal malfunction or incomplete programming.

Action Taken When the DTC Sets

- DTCs P0601, P0602, P0603, P0604, P0606, and P062F are Type A DTCs.
- The high-voltage contactor relays may open.

Conditions for Clearing the DTC

DTCs P0601, P0602, P0603, P0604, P0606, and P062F are Type A DTCs.

Diagnostic Aids

- The DTC P0606 may set in Hybrid Powertrain Control Module 2 due to other faults. Do not replace the Hybrid Powertrain Control Module 2 until other DTCs are diagnosed first.
- The DTC P0606 can falsely set in Hybrid Powertrain Control Module 2 when the 12 V battery has been disconnected. In this case, just disconnect and reconnect the 12 V battery again. If this DTC becomes history, use scan tool to clear this DTC. No further action is required.
- If stored only as a history DTC and not retrieved as a current DTC, do not replace the control module.

Circuit/System Verification

Note: The DTC P0606 can falsely set in Hybrid Powertrain Control Module 2 when disconnecting the 12 V battery. See Diagnostic Aids section for more information.

1. Verify that DTC P0606 is not set.
   If the DTC P0606 is set with other DTCs set, diagnose all other DTCs first. Refer to Diagnostic Trouble Code (DTC) List - Vehicle .
   If the DTC P0606 is set without other DTCs set, replace the control module that set the DTC.
2. Verify that DTC P0602 is not set.
   If the DTC P0602 is set, program the control module that set the DTC. If the DTC P0602 resets, replace the control module that set the DTC.
3. Verify that DTC P0601, P0603, P0604, or P062F is not set.
   If any of the DTCs are set, replace the control module that set the DTC.

Repair Instructions

Perform the Diagnostic Repair Verification after completing the diagnostic procedure.

Control Module References for control module replacement, programming and setup

&#169© Copyright Chevrolet. All rights reserved

DTC P06E4

Diagnostic Instructions

- Perform the Diagnostic System Check - Vehicle prior to using this diagnostic procedure.
- Review Strategy Based Diagnosis for an overview of the diagnostic approach.
- Diagnostic Procedure Instructions provides an overview of each diagnostic category.

DTC Descriptor

DTC P06E4 00: Control Module Wake-Up Circuit Performance

Diagnostic Fault Information

Circuit	Short to Ground	Open/High Resistance	Short to Voltage	Signal Performance
Accessory Wake Up Serial Data 2	P06E4, U0100-U02FF*	U0100-U02FF	U0100-U02FF	--
* Vehicle will not start.				

Circuit/System Description

The accessory wake-up serial data 2 circuit is energised by the hybrid powertrain control module 2 to immediately activate other control modules connected to this circuit when the body control module (BCM) signals the powertrain control module 2 that serial data is required.

Depending on the option content, control modules that may receive the wake-up signal are as follows:

- 14 V Power Module
- Battery Charger
- Battery Energy Control Module (BECM)
- Electronic Brake Control Module (EBCM)
- A/C Compressor
- Transmission Control Module (TCM)
- Engine Control Module (ECM)

- Power Inverter Module

Conditions for Running the DTC

- The system voltage is between 9–16 V.
- The vehicle power mode master requires serial data communication to occur.
- The hybrid powertrain control module 2 attempts to wake up the control modules connected to its control module output wake-up circuit.

Conditions for Setting the DTC

The hybrid powertrain control module 2 detects a fault in the control module output wake-up circuit.

Action Taken When the DTC Sets

- The DTC P06E4 is a type A DTC.
- The control modules is never signaled; therefore the specific subsystems will not function.
- The vehicle will not start while the circuit is shorted to ground.
- The MIL will illuminate, along with several DIC messages.

Conditions for Clearing the DTC

- The DTC P06E4 is a type A DTC.
- A current DTC clears when the malfunction is no longer present.
- A history DTC clears when the module ignition cycle counter reaches the reset threshold of 50, without a repeat of the malfunction.

Diagnostic Aids

Short-circuit to earth will also set multiple no communication codes for high-speed GMLAN control modules.

Reference Information

Schematic Reference

- Data Communication Schematics
- Control Module References

Connector End View Reference

Component Connector End Views

Description and Operation

Data Link Communications Description and Operation

Electrical Information Reference

- Circuit Testing
- Connector Repairs
- Testing for Intermittent Conditions and Poor Connections
- Wiring Repairs

Scan Tool Reference

Control Module References for scan tool information

Circuit/System Testing

Note: Use the schematic to identify the following:
- The control modules that share the K114B hybrid powertrain control module 2 terminal 69 X2 accessory wake-up serial data 2 circuit
- The control module B+, ignition, earth, accessory wake-up serial data 2 circuit terminals

1. Vehicle OFF, disconnect the X2 harness connectors at the K114B hybrid powertrain control module 2.
2. Vehicle OFF, and all vehicle systems OFF, all keys at least 3 metres away from vehicle, all access doors closed. It may take up to 2 minutes for all vehicle systems to power down. Test for greater than 100 Ω, but less than infinite resistance, between the accessory wake-up serial data 2 circuit terminal 69 X2 and earth.
   If less than the specified range, refer to Testing the Accessory Wake Up Serial Data 2 Circuits for a Short-Circuit to Earth.
   If infinite resistance, test the accessory wake-up serial data 2 circuit for an open-circuit/high resistance.
3. Vehicle in Service Mode, verify that a test lamp illuminates between each B+ circuit terminal and earth.
   If the test lamp does not illuminate, test the B+ circuit for a short to ground or an open/high resistance. If the circuit tests normal and the B+ circuit fuse is open, replace the K114B hybrid powertrain control module 2.
4. Vehicle in Service Mode, verify that a test lamp illuminates between each ignition circuit terminal and earth.
   If the test lamp does not illuminate, test the ignition circuit for a short to ground or an open/high resistance. If the circuit tests normal and the ignition circuit fuse is open, replace the K114B hybrid powertrain control module 2.
5. If the circuits test normal, replace the K114B hybrid powertrain control module 2.

Testing the Accessory Wake-Up Serial Data 2 Circuits for a Short-Circuit to Earth

1. Vehicle OFF, disconnect the X2 harness connector at the A4 hybrid/EV battery pack.

2. Vehicle OFF, and all vehicle systems OFF, all keys at least 3 metres away from vehicle, all access doors closed. It may take up to 2 minutes for all vehicle systems to power down. Test for less than 100 Ω between the K114B hybrid powertrain control module 2 accessory wake-up serial data 2 circuit terminal 69 X2 and earth.
   If greater than the specified range, replace the A4 hybrid/EV battery pack.
3. Vehicle OFF, disconnect the harness connector at an easily accessible control module that shares the K114B hybrid powertrain control module 2 terminal 69 X2 accessory wake-up serial data 2 circuit.
4. Vehicle OFF, and all vehicle systems OFF, all keys at least 3 metres away from vehicle, all access doors closed. It may take up to 2 minutes for all vehicle systems to power down. Test for less than 100 Ω between the K114B hybrid powertrain control module 2 accessory wake-up serial data 2 circuit terminal 69 X2 and earth.
   If greater than the specified range, replace the control module that was just disconnected.
5. Repeat step 3 until all control modules on the K114B hybrid powertrain control module 2 accessory wake-up serial data 2 circuit terminal 69 X2 have been disconnected.
6. Repair the short-circuit to earth on the accessory wake-up serial data 2 circuit.

Repair Instructions

Perform the Diagnostic Repair Verification after completing the diagnostic procedure.

Control Module References for control module replacement, programming and setup.

&#169© Copyright Chevrolet. All rights reserved

DTC P0A1F, P1A05 or P1A06

Diagnostic Instructions

- Perform the Diagnostic System Check - Vehicle prior to using this diagnostic procedure.
- Review Strategy Based Diagnosis for an overview of the diagnostic approach.
- Diagnostic Procedure Instructions provides an overview of each diagnostic category.

DTC Descriptors

DTC P0A1F 00: Battery Energy Control Module Internal Performance

DTC P1A05 00: Battery Energy Control Module Random Access Memory (RAM)

DTC P1A06 00: Battery Energy Control Module Read Only Memory (ROM)

Circuit/System Description

The battery energy control module will diagnose its own systems and determine when a fault condition is present. Diagnostics and system status is communicated from the battery energy control module to the hybrid powertrain control module 2 through serial data. The hybrid powertrain control module 2 is the host controller for diagnostic trouble code (DTC) information.

This diagnostic applies to internal microprocessor integrity conditions within the battery energy control module. This fault is internal to the battery energy control module and no external circuits are involved.

Conditions for Running the DTC

- The battery energy control module is awake and communicating.
- The system voltage is at least 9 V.

Conditions for Setting the DTC

The battery energy control module has detected an internal malfunction.

Action Taken When the DTC Sets

- DTCs P0A1F, P1A05 and P1A06 are type A DTCs.
- Vehicle goes to reduced battery power mode. After vehicle is turned off, vehicle will not return to propulsion active mode.

Conditions for Clearing the DTC

DTCs P0A1F, P1A05 and P1A06 are type A DTCs.

Diagnostic Aids

If stored only as a history DTC and not retrieved as a current DTC, do not replace the control module.

Circuit/System Verification

Verify that DTC P0A1F, P1A05 or P1A06 is not set.

If any of the DTCs are set, replace the A4 hybrid/EV battery pack.

Repair Instructions

Perform the Diagnostic Repair Verification after completing the diagnostic procedure.

- Drive Motor Battery Replacement and Shipping Preparation
- Control Module References for control module replacement, programming and setup

&#169© Copyright Chevrolet. All rights reserved

DTC P16B7

Diagnostic Instructions

- Perform the Diagnostic System Check - Vehicle prior to using this diagnostic procedure.
- Review Strategy Based Diagnosis for an overview of the diagnostic approach.
- Diagnostic Procedure Instructions provides an overview of each diagnostic category.

DTC Descriptor

DTC P16B7 00: Electric A/C Compressor Control Module Wake-Up Circuit Performance

Diagnostic Fault Information

Circuit	Short to Ground	Open/High Resistance	Short to Voltage	Signal Performance
Accessory Wake Up Serial Data 2	P16B7, U016B*	U016B*	U016B*	-
* Other DTCs may set with this fault				

Circuit/System Description

The accessory wake-up serial data 2 circuit is energised by the hybrid powertrain control module 2 to immediately activate the A/C compressor connected to this circuit when the body control module (BCM) signals the hybrid powertrain control module 2 that serial data is required.

Conditions for Running the DTC

- The system voltage is greater than 10.25 V.
- The A/C compressor is awake.
- Vehicle ON.
- The A/C compressor receives a serial data message from hybrid powertrain control module 2 and "Propulsion System Active" is TRUE for 500 ms continuously.

Conditions for Setting the DTC

The A/C compressor detects a fault in the wake-up circuit.

Action Taken When the DTC Sets

DTC P16B7 is a type B DTC.

Conditions for Clearing the DTC

DTC P16B7 is a type B DTC.

Diagnostic Aids

Short-circuit to earh may set multiple no communication codes for high-speed GMLAN control modules.

Reference Information

Schematic Reference

- Data Communication Schematics
- Control Module References

Connector End View Reference

Component Connector End Views

Description and Operation

Data Link Communications Description and Operation

Electrical Information Reference

- Circuit Testing
- Connector Repairs
- Testing for Intermittent Conditions and Poor Connections
- Wiring Repairs

Scan Tool Reference

Control Module References for scan tool information

Circuit/System Verification

Verify that DTC P06E4 is not set.

If the DTC is set, refer to DTC P06E4 .

Circuit/System Testing

Note: Use the schematic to identify the control modules B+, ignition, earth, communication enable and serial data circuit terminals.

1. Vehicle OFF, disconnect the X1 harness connector at the G1 A/C compressor.
2. Vehicle in Service Mode, verify that a test lamp illuminates between the wake-up circuit terminal 2 X1 and earth.
   If the test lamp does not illuminate, test the circuit for a short-circuit to earth or open-circuit/high resistance. If the circuit tests normal, replace the K114B hybrid powertrain control module 2.
3. Vehicle OFF, verify that a test lamp does not illuminate between the wake-up circuit terminal 2 X1 and earth.
   If the test lamp illuminates, test the circuit for a short to voltage. If the circuit tests normal, replace the K114B hybrid powertrain control module 2.
4. If all circuits test normal, replace the G1 A/C compressor.

Repair Instructions

Perform the Diagnostic Repair Verification after completing the diagnostic procedure.

Control Module References for control module replacement, programming and setup

&#169© Copyright Chevrolet. All rights reserved

DTC P16B8-P16BA

Diagnostic Instructions

- Perform the Diagnostic System Check - Vehicle prior to using this diagnostic procedure.
- Review Strategy Based Diagnosis for an overview of the diagnostic approach.
- Diagnostic Procedure Instructions provides an overview of each diagnostic category.

DTC Descriptors

DTC P16B8 00: Electric A/C Compressor Control Module Random Access Memory Performance

DTC P16B9 00: Electric A/C Compressor Control Module Read Only Memory Performance

DTC P16BA 00: Electric A/C Compressor Control Module Long-Term Memory Performance

Circuit/System Description

The A/C compressor will diagnose its own systems and determine when a fault condition is present. This diagnostic applies to internal microprocessor integrity conditions within the A/C compressor. This fault is internal to the A/C compressor and no external circuits are involved.

Conditions for Running the DTC

- System voltage is greater than 10.25 V.
- The control module is awake and communicating.

Conditions for Setting the DTC

The control module has detected an internal malfunction.

Action Taken When the DTC Sets

DTCs P16B8, P16B9 and P16BA are type A DTCs.

Conditions for Clearing the DTC

- DTCs P16B8, P16B9 and P16BA are type A DTCs.
- After the vehicle has been OFF for a sufficient amount of time to allow the control modules to enter a sleep mode, the control modules will re-enable the output on the following ignition cycle and the DTC will become history.

Circuit/System Verification

Verify that DTC P16B8, P16B9 or P16BA is not set.

If any of the DTCs are set, replace the G1 A/C compressor.

Repair Instructions

Perform the Diagnostic Repair Verification after completing the diagnostic procedure.

Control Module References for control module replacement, programming and setup

&#169© Copyright Chevrolet. All rights reserved

DTC P16C1-P16C5

Diagnostic Instructions

- Perform the Diagnostic System Check - Vehicle prior to using this diagnostic procedure.
- Review Strategy Based Diagnosis for an overview of the diagnostic approach.
- Diagnostic Procedure Instructions provides an overview of each diagnostic category.

DTC Descriptors

DTC P16C1 00: Battery Charger Control Module Read Only Memory Performance

DTC P16C2 00: Battery Charger Control Module Random Access Memory Performance

DTC P16C3 00: Battery Charger Control Module Long-Term Memory Performance

DTC P16C4 00: Battery Charger Control Module Serial Peripheral Interface (SPI) Bus 1

DTC P16C5 00: Battery Charger Control Module Serial Peripheral Interface (SPI) Bus 2

Circuit/System Description

The battery charger will diagnose its own systems and determine when a fault condition is present. This diagnostic applies to internal microprocessor integrity conditions within the battery charger. This fault is internal to the battery charger and no external circuits are involved.

Conditions for Running the DTC

- The control module is awake and communicating.
- The vehicle is in charge mode.
- Charge mode is not in heat-only mode.

Conditions for Setting the DTC

The control module has detected an internal malfunction.

Action Taken When the DTC Sets

DTCs P16C1, P16C2, P16C3, P16C4, and P16C5 are type A DTCs.

Conditions for Clearing the DTC

DTCs P16C1, P16C2, P16C3, P16C4, and P16C5 are type A DTCs.

Diagnostic Aids

- The DTC may be stored as a history DTC without affecting the operation of the control module.
- If stored only as a history DTC and not retrieved as a current DTC, do not replace the control module.

Circuit/System Verification

Verify that DTC P16C1, P16C2, P16C3, P16C4, or P16C5 is not set.

If any of the DTCs are set, replace the T18 battery charger.

Repair Instructions

Perform the Diagnostic Repair Verification after completing the diagnostic procedure.

Control Module References for control module replacement, programming and setup

&#169© Copyright Chevrolet. All rights reserved

DTC P16C6

Diagnostic Instructions

- Perform the Diagnostic System Check - Vehicle prior to using this diagnostic procedure.
- Review Strategy Based Diagnosis for an overview of the diagnostic approach.
- Diagnostic Procedure Instructions provides an overview of each diagnostic category.

DTC Descriptor

DTC P16C6 00: Battery Charger Control Module Wake-Up Circuit Performance

Diagnostic Fault Information

Circuit	Short to Ground	Open/High Resistance	Short to Voltage	Signal Performance
Accessory Wake Up Serial Data 2	P16C6, U0100-U02FF	U0100-U02FF	U0100-U02FF	--
* Other DTCs may set with this fault				

Circuit/System Description

The accessory wake-up serial data 2 circuit is energised by the hybrid powertrain control module 2 to immediately activate the battery charger connected to this circuit when the body control module (BCM) signals the hybrid powertrain control module 2 that serial data is required. The battery charger monitors the accessory wake-up serial data 2 circuit along with the propulsion system active status serial data message. The propulsion system active status message should not be active when the accessory wake-up serial data 2 circuit is not high. This DTC is set when the accessory wake-up serial data 2 circuit is not high when the propulsion system active signal status is active.

Conditions for Running the DTC

DTC U2609 is not set.

Conditions for Setting the DTC

The battery charger detects a fault in the wake-up circuit.

Action Taken When the DTC Sets

- DTC P16C6 is a type A DTC.
- The control module is never signalled; therefore the specific subsystems will not function.

Conditions for Clearing the DTC

DTC P16C6 is a type A DTC.

Diagnostic Aids

Short-circuit to earh may set multiple no communication codes for high-speed GMLAN control modules.

Reference Information

Schematic Reference

- Data Communication Schematics
- Control Module References

Connector End View Reference

Component Connector End Views

Description and Operation

Data Link Communications Description and Operation

Electrical Information Reference

- Circuit Testing
- Connector Repairs
- Testing for Intermittent Conditions and Poor Connections
- Wiring Repairs

Scan Tool Reference

Control Module References for scan tool information

Circuit/System Verification

Verify that DTC P06E4 is not set.

If the DTC is set, refer to DTC P06E4 .

Circuit/System Testing

Note: Use the schematic to identify the control modules B+, ignition, and accessory wake-up serial data 2 circuit terminals.

1. Vehicle OFF, disconnect the X1 harness connector at the T18 battery charger.
2. Vehicle in Service Mode, verify that a test lamp illuminates between the accessory wake-up serial data 2 circuit terminal F X1 and earth.
   If the test lamp does not illuminate, test the circuit for a short-circuit to earth or open-circuit/high resistance. If the circuit tests normal, replace the K114B hybrid powertrain control module 2.
3. Vehicle OFF, verify that a test lamp does not illuminate between the accessory wake-up serial data 2 circuit terminal F X1 and earth.
   If the test lamp illuminates, test the circuit for a short to voltage. If the circuit tests normal, replace the K114B hybrid powertrain control module 2.
4. If all circuits test normal, replace the T18 battery charger.

Repair Instructions

Perform the Diagnostic Repair Verification after completing the diagnostic procedure.

Control Module References for control module replacement, programming and setup.

&#169© Copyright Chevrolet. All rights reserved

DTC P1E8E-P1E91

Diagnostic Instructions

- Perform the Diagnostic System Check - Vehicle prior to using this diagnostic procedure.
- Review Strategy Based Diagnosis for an overview of the diagnostic approach.
- Diagnostic Procedure Instructions provides an overview of each diagnostic category.

DTC Descriptors

DTC P1E8E 00: Hybrid/EV Battery Interface Control Module 1 Performance

DTC P1E8F 00: Hybrid/EV Battery Interface Control Module 1 Random Access Memory Performance

DTC P1E90 00: Hybrid/EV Battery Interface Control Module 1 Read Only Memory Performance

DTC P1E91 00: Hybrid/EV Battery Interface Control Module 1 Long-Term Memory Performance

Circuit/System Description

The hybrid battery interface control module 1 will diagnose its own systems and determine when a fault condition is present. This diagnostic applies to internal microprocessor integrity conditions within the hybrid battery interface control module 1. This fault is internal to the hybrid battery interface control module 1 and no external circuits are involved.

Conditions for Running the DTC

- The control module is awake.
- The system voltage is at least 9 V.
- DTC U2603 is not set.

Conditions for Setting the DTC

The control module has detected an internal malfunction.

Action Taken When the DTC Sets

DTCs P1E8E, P1E8F, P1E90 and P1E91 are type A DTCs.

Conditions for Clearing the DTC

DTCs P1E8E, P1E8F, P1E90, and P1E91 are type A DTCs.

Diagnostic Aids

If stored only as a history DTC and not retrieved as a current DTC, do not replace the control module.

Circuit/System Verification

Verify that DTC P1E8E, P1E8F, P1E90 or P1E91 is not set.

If any of the DTCs are set, replace the A4 hybrid/EV battery pack.

Repair Instructions

Perform the Diagnostic Repair Verification after completing the diagnostic procedure.

- Drive Motor Battery Replacement and Shipping Preparation
- Control Module References for control module replacement, programming and setup

&#169© Copyright Chevrolet. All rights reserved

DTC P1E94-P1E97

Diagnostic Instructions

- Perform the Diagnostic System Check - Vehicle prior to using this diagnostic procedure.
- Review Strategy Based Diagnosis for an overview of the diagnostic approach.
- Diagnostic Procedure Instructions provides an overview of each diagnostic category.

DTC Descriptors

DTC P1E94 00: Hybrid/EV Battery Interface Control Module 2 Performance

DTC P1E95 00: Hybrid/EV Battery Interface Control Module 2 Random Access Memory Performance

DTC P1E96 00: Hybrid/EV Battery Interface Control Module 2 Read Only Memory Performance

DTC P1E97 00: Hybrid/EV Battery Interface Control Module 2 Long-Term Memory Performance

Circuit/System Description

The hybrid battery interface control module 2 will diagnose its own systems and determine when a fault condition is present. This diagnostic applies to internal microprocessor integrity conditions within the hybrid battery interface control module 2. This fault is internal to the hybrid battery interface control module 2 and no external circuits are involved.

Conditions for Running the DTC

- The control module is awake.
- DTC U2604 is not set.

Conditions for Setting the DTC

The control module has detected an internal malfunction.

Action Taken When the DTC Sets

DTCs P1E94, P1E95, P1E96, and P1E97 are type A DTCs.

Conditions for Clearing the DTC

DTCs P1E94, P1E95, P1E96, and P1E97 are type A DTCs.

Diagnostic Aids

If stored only as a history DTC and not retrieved as a current DTC, do not replace the control module.

Circuit/System Verification

Verify that DTC P1E94, P1E95, P1E96, or P1E97 is not set.

If any of the DTCs are set, replace the A4 hybrid/EV battery pack.

Repair Instructions

Perform the Diagnostic Repair Verification after completing the diagnostic procedure.

- Drive Motor Battery Replacement and Shipping Preparation
- Control Module References for control module replacement, programming and setup

&#169© Copyright Chevrolet. All rights reserved

DTC P1E9A-P1E9D

Diagnostic Instructions

- Perform the Diagnostic System Check - Vehicle prior to using this diagnostic procedure.
- Review Strategy Based Diagnosis for an overview of the diagnostic approach.
- Diagnostic Procedure Instructions provides an overview of each diagnostic category.

DTC Descriptors

DTC P1E9A 00: Hybrid/EV Battery Interface Control Module 3 Performance

DTC P1E9B 00: Hybrid/EV Battery Interface Control Module 3 Random Access Memory Performance

DTC P1E9C 00: Hybrid/EV Battery Interface Control Module 3 Read Only Memory Performance

DTC P1E9D 00: Hybrid/EV Battery Interface Control Module 3 Long-Term Memory Performance

Circuit/System Description

The hybrid battery interface control module 3 will diagnose its own systems and determine when a fault condition is present. This diagnostic applies to internal microprocessor integrity conditions within the hybrid battery interface control module 3. This fault is internal to the hybrid battery interface control module 3 and no external circuits are involved.

Conditions for Running the DTC

- The control module is awake.
- DTC U2605 is not set.

Conditions for Setting the DTC

The control module has detected an internal malfunction.

Action Taken When the DTC Sets

DTCs P1E9A, P1E9B, P1E9C, and P1E9D are type A DTCs.

Conditions for Clearing the DTC

DTCs P1E9A, P1E9B, P1E9C, and P1E9D are type A DTCs.

Diagnostic Aids

If stored only as a history DTC and not retrieved as a current DTC, do not replace the control module.

Circuit/System Verification

Verify that DTC P1E9A, P1E9B, P1E9C, or P1E9D is not set.

If any of the DTCs are set, replace the A4 hybrid/EV battery pack.

Repair Instructions

Perform the Diagnostic Repair Verification after completing the diagnostic procedure.

- Drive Motor Battery Replacement and Shipping Preparation
- Control Module References for control module replacement, programming and setup

&#169© Copyright Chevrolet. All rights reserved

DTC P1EA0-P1EA3

Diagnostic Instructions

- Perform the Diagnostic System Check - Vehicle prior to using this diagnostic procedure.
- Review Strategy Based Diagnosis for an overview of the diagnostic approach.
- Diagnostic Procedure Instructions provides an overview of each diagnostic category.

DTC Descriptors

DTC P1EA0 00: Hybrid/EV Battery Interface Control Module 4 Performance

DTC P1EA1 00: Hybrid/EV Battery Interface Control Module 4 Random Access Memory Performance

DTC P1EA2 00: Hybrid/EV Battery Interface Control Module 4 Read Only Memory Performance

DTC P1EA3 00: Hybrid/EV Battery Interface Control Module 4 Long-Term Memory Performance

Circuit/System Description

The hybrid battery interface control module 4 will diagnose its own systems and determine when a fault condition is present. This diagnostic applies to internal microprocessor integrity conditions within the hybrid battery interface control module 4. This fault is internal to the hybrid battery interface control module 4 and no external circuits are involved.

Conditions for Running the DTC

- The control module is awake.
- DTC U2606 is not set.

Conditions for Setting the DTC

The control module has detected an internal malfunction.

Action Taken When the DTC Sets

DTCs P1EA0, P1EA1, P1EA2, and P1EA3 are type A DTCs.

Conditions for Clearing the DTC

DTCs P1EA0, P1EA1, P1EA2, and P1EA3 are type A DTCs.

Diagnostic Aids

If stored only as a history DTC and not retrieved as a current DTC, do not replace the control module.

Circuit/System Verification

Verify that DTC P1EA0, P1EA1, P1EA2, or P1EA3 is not set.

If any of the DTCs are set, replace the A4 hybrid/EV battery pack.

Repair Instructions

Perform the Diagnostic Repair Verification after completing the diagnostic procedure.

- Drive Motor Battery Replacement and Shipping Preparation
- Control Module References for control module replacement, programming and setup

&#169© Copyright Chevrolet. All rights reserved

DTC P1EB1

Diagnostic Instructions

- Perform the Diagnostic System Check - Vehicle prior to using this diagnostic procedure.
- Review Strategy Based Diagnosis for an overview of the diagnostic approach.
- Diagnostic Procedure Instructions provides an overview of each diagnostic category.

DTC Descriptor

DTC P1EB1 00: Hybrid/EV Battery Interface Control Module Software Incompatible

Circuit/System Description

This is the software incompatibility issue between the hybrid battery interface control modules and the battery energy control module. No external circuits are involved.

Conditions for Running the DTC

- Vehicle ON.
- The system voltage is at least 9 V.
- DTC U2401, U2603, U2604, U2605 or U2606 is not set.

Conditions for Setting the DTC

- Any one of the hybrid battery interface control module software revision does not match.
- Battery energy control module software and hybrid battery interface control module software are incompatible.

Action Taken When the DTC Sets

- Slave data that is incompatible with the battery energy control module software is set to Invalid, 0 V and -40°C (-40°F).
- DTC P1EB1 is a type A DTC.

Conditions for Clearing the DTC

DTC P1EB1 is a type A DTC.

Diagnostic Aids

If stored only as a history DTC and not retrieved as a current DTC, do not replace the control module.

Circuit/System Verification

If the DTC P1EB1 is set, program the K16 battery energy control module. This DTC should not reset.

If the DTC resets without other DTCs set, replace the A4 hybrid/EV battery pack.
If the DTC resets along with any of the DTCs P1EB2, P1EB3, P1EB4, or P1EB5 set, refer to DTC P1EB2-P1EB5 .

Repair Instructions

Perform the Diagnostic Repair Verification after completing the diagnostic procedure.

- Drive Motor Battery Replacement and Shipping Preparation
- Control Module References for control module replacement, programming and setup

&#169© Copyright Chevrolet. All rights reserved

DTC P1EB2-P1EB5

Diagnostic Instructions

- Perform the Diagnostic System Check - Vehicle prior to using this diagnostic procedure.
- Review Strategy Based Diagnosis for an overview of the diagnostic approach.
- Diagnostic Procedure Instructions provides an overview of each diagnostic category.

DTC Descriptors

DTC P1EB2 00: Hybrid/EV Battery Interface Control Module 1 Not Programmed

DTC P1EB3 00: Hybrid/EV Battery Interface Control Module 2 Not Programmed

DTC P1EB4 00: Hybrid/EV Battery Interface Control Module 3 Not Programmed

DTC P1EB5 00: Hybrid/EV Battery Interface Control Module 4 Not Programmed

Circuit/System Description

When the battery energy control module is flash programmed, the hybrid battery interface module operating software and calibrations are provided to the battery energy control module. The hybrid battery interface module software and calibrations are then loaded to each of the hybrid battery interface modules from the battery energy control module. This operation is automatic and requires no operator action. At this point, if any of the hybrid battery interface control modules are not programmed correctly, the appropriate DTC is set.

This fault is internal to the hybrid battery interface control modules and no external circuits are involved.

Conditions for Running the DTC

- The battery energy control module is awake and communicating.
- The system voltage is at least 9 V.

Conditions for Setting the DTC

The hybrid battery interface control module is not programmed correctly.

Action Taken When the DTC Sets

- The slave data that is incompatible with the battery energy control module software is set to Invalid, 0 V, and -40°C (-40°F).
- DTCs P1EB2, P1EB3, P1EB4, and P1EB5 are type A DTCs.

Conditions for Clearing the DTC

- The hybrid battery interface control module is programmed correctly.
- DTCs P1EB2, P1EB3, P1EB4, and P1EB5 are type A DTCs.

Circuit/System Verification

If any of the DTCs P1EB2, P1EB3, P1EB4, and P1EB5 are set, program the K16 battery energy control module. The DTC should not reset.

If any of the DTCs reset, replace the A4 hybrid/EV battery pack.

Repair Instructions

Perform the Diagnostic Repair Verification after completing the diagnostic procedure.

- Drive Motor Battery Replacement and Shipping Preparation
- Control Module References for control module replacement, programming and setup

&#169© Copyright Chevrolet. All rights reserved

DTC P1EB9

Diagnostic Instructions

- Perform the Diagnostic System Check - Vehicle prior to using this diagnostic procedure.
- Review Strategy Based Diagnosis for an overview of the diagnostic approach.
- Diagnostic Procedure Instructions provides an overview of each diagnostic category.

DTC Descriptor

DTC P1EB9 00: High-Voltage Energy Communication Bus Enable Circuit

Diagnostic Fault Information

Circuit	Short to Ground	Open/High Resistance	Short to Voltage	Signal Performance
High-Voltage Energy Management Communication Enable	P1EB9, U0100-U02FF*	U0100-U02FF	U0100-U02FF	--
* Vehicle will not start.				

Circuit/System Description

The hybrid powertrain control module 2 activates the high-voltage energy management communication enable circuit when the vehicle is on. This circuit wakes-up the control modules for high-voltage energy bus communication.

Conditions for Running the DTC

- The system voltage is between 9–16 V.
- The vehicle power mode master requires serial data communication to occur.

Conditions for Setting the DTC

The hybrid powertrain control module 2 detects a fault in the high- voltage energy management communication enable circuit.

Action Taken When the DTC Sets

- DTC P1EB9 is a type A DTC.
- The control modules is never signalled, therefore the specific subsystems will not function.

Conditions for Clearing the DTC

DTC P1EB9 is a type A DTC.

Diagnostic Aids

Short-circuit to earth will also set multiple no communication codes for control modules on high-voltage energy serial data bus.

Reference Information

Schematic Reference

- Data Communication Schematics
- Control Module References

Connector End View Reference

Component Connector End Views

Description and Operation

Data Link Communications Description and Operation

Electrical Information Reference

- Circuit Testing
- Connector Repairs
- Testing for Intermittent Conditions and Poor Connections
- Wiring Repairs

Scan Tool Reference

Control Module References for scan tool information

Circuit/System Testing

Note: Use the schematic to identify the following:

- The control modules that share the K114B hybrid powertrain control module 2 terminal 48 X2 high-voltage energy management communication enable circuit
- The control module B+, ignition and high-voltage energy management communication enable circuit terminals

1. Vehicle OFF, disconnect the X2 harness connector at the K114B hybrid powertrain control module 2.
2. Vehicle OFF, and all vehicle systems OFF, all keys at least 3 metres away from vehicle, all access doors closed. It may take up to 2 minutes for all vehicle systems to power down. Test for greater than 100 Ω, but less than infinite resistance, between the high-voltage energy management communication enable circuit terminal 48 X2 and earth.
   If less than the specified range, refer to Testing the High-Voltage Energy Management Communication Enable Circuits for a Short-Circuit to Earth.
   If infinite resistance, test the high-voltage energy management communication enable circuit for an open-circuit/high resistance.
3. Vehicle in Service Mode, verify that a test lamp illuminates between each B+ circuit terminal and earth.
   If the test lamp does not illuminate, test the B+ circuit for a short to ground or an open/high resistance. If the circuit tests normal and the B+ circuit fuse is open, replace the K114B hybrid powertrain control module 2.
4. Vehicle in Service Mode, verify that a test lamp illuminates between each ignition circuit terminal and earth.
   If the test lamp does not illuminate, test the ignition circuit for a short to ground or an open/high resistance. If the circuit tests normal and the ignition circuit fuse is open, replace the K114B hybrid powertrain control module 2.
5. If the circuits test normal, replace the K114B hybrid powertrain control module 2.

Testing the High-Voltage Energy Management Communication Enable Circuits for a Short-Circuit to Earth

1. Vehicle OFF, disconnect the X1 harness connector at the A4 hybrid/EV battery pack.
2. Vehicle OFF, and all vehicle systems OFF, all keys at least 3 metres away from vehicle, all access doors closed. It may take up to 2 minutes for all vehicle systems to power down. Test for less than 100 Ω between the K114B hybrid powertrain control module 2 high-voltage energy management communication enable circuit terminal 48 X2 and earth.
   If greater than the specified range, replace the A4 hybrid/EV battery pack.
3. Vehicle OFF, disconnect the X1 harness connector at the T18 battery charger.
4. Vehicle OFF, and all vehicle systems OFF, all keys at least 3 metres away from vehicle, all access doors closed. It may take up to 2 minutes for all vehicle systems to power down. Test for less than 100 Ω between the K114B hybrid powertrain control module 2 high-voltage energy management communication enable circuit terminal 48 X2 and earth.
   If greater than the specified range, replace the T18 battery charger.
5. Repair the short-circuit to earth on the high-voltage energy management communication enable circuit.

Repair Instructions

Perform the Diagnostic Repair Verification after completing the diagnostic procedure.

Control Module References for control module replacement, programming and setup.

&#169© Copyright Chevrolet. All rights reserved

DTC P1EC1 or P1EC2

Diagnostic Instructions

- Perform the Diagnostic System Check - Vehicle prior to using this diagnostic procedure.
- Review Strategy Based Diagnosis for an overview of the diagnostic approach.
- Diagnostic Procedure Instructions provides an overview of each diagnostic category.

DTC Descriptors

DTC P1EC1 00: Battery Energy Control Module High-Voltage Energy Communication Bus Enable Circuit Low Voltage

DTC P1EC2 00: Battery Energy Control Module High-Voltage Energy Communication Bus Enable Circuit High Voltage

Diagnostic Fault Information

Circuit	Short to Ground	Open/High Resistance	Short to Voltage	Signal Performance
High-Voltage Energy Management Communication Enable	P1EC1	P1EC1	P1EC2	--

Circuit/System Description

The hybrid powertrain control module 2 activates the high-voltage energy management communication enable circuit when the vehicle is on. The high-voltage energy management communication enable circuit wakes up the battery energy control module for serial data communication.

The battery energy control module compares the high-voltage energy management communication enable hardwire signal with a hybrid powertrain control module 2 serial data message indicating that the high-voltage energy management communication enable signal is active. If the high-voltage energy management communication enable hardwire signal is low when the serial data message indicates it should be high, then DTC P1EC1 is set.

Conditions for Running the DTC

- The control module is awake and communicating.
- The system voltage is at least 9 V.

- DTCs U2602, U180B, P1A0C, or P1A07 are not set.

Conditions for Setting the DTC

P1EC1

The ignition voltage on the high-voltage energy management communication enable circuit is less than 5 V.

Action Taken When the DTC Sets

DTCs P1EC1 and P1EC2 are type A DTCs.

Conditions for Clearing the DTC

P1EC1

The ignition voltage on the high-voltage energy management communication enable circuit is at least 5 V for 10 seconds.

DTCs P1EC1 and P1EC2 are type A DTCs.

Diagnostic Aids

Short-circuit to earth will also set multiple no communication codes for control modules on high-voltage energy serial data bus.

Reference Information

Schematic Reference

- Data Communication Schematics
- Control Module References

Connector End View Reference

Component Connector End Views

Description and Operation

Data Link Communications Description and Operation

Electrical Information Reference

- Circuit Testing
- Connector Repairs
- Testing for Intermittent Conditions and Poor Connections
- Wiring Repairs

Scan Tool Reference

Control Module References for scan tool information

Circuit/System Verification

Verify that DTC P1EB9 or U185B is not set.

If any of the DTCs are set, refer to Diagnostic Trouble Code (DTC) List - Vehicle .

Circuit/System Testing

Note: Use the schematic to identify the high-voltage energy management communication enable circuit terminal of the control module.

1. Vehicle OFF, disconnect the X1 harness connector at the A4 hybrid battery pack.
2. Vehicle in Service Mode, verify that a test lamp illuminates between the high -oltage energy management communication enable circuit terminal 5 X1 and earth.
   If the test lamp does not illuminate, test the circuit for a short-circuit to earth or open-circuit/high resistance. If the circuit tests normal, replace the K114B hybrid powertrain control module 2.
3. Vehicle OFF, and all vehicle systems OFF, all keys at least 3 metres away from vehicle, all access doors closed. It may take up to 2 minutes for all vehicle systems to power down. Verify that a test lamp does not illuminate between the high- voltage energy management communication enable circuit terminal 5 X1 and earth.
   If the test lamp illuminates, test the circuit for a short to voltage. If the circuit tests normal, replace the K114B hybrid powertrain control module 2.
4. If all circuits test normal, replace the A4 hybrid/EV battery pack.

Repair Instructions

Perform the Diagnostic Repair Verification after completing the diagnostic procedure.

- Drive Motor Battery Replacement and Shipping Preparation
- Control Module References for control module replacement, programming and setup

&#169© Copyright Chevrolet. All rights reserved

DTC P1EF8

Diagnostic Instructions

- Perform the Diagnostic System Check - Vehicle prior to using this diagnostic procedure.
- Review Strategy Based Diagnosis for an overview of the diagnostic approach.
- Diagnostic Procedure Instructions provides an overview of each diagnostic category.

DTC Descriptors

DTC P1EF8 00: Battery Charger Control Module High-Voltage Energy Communication Bus Enable Circuit Low Voltage

Diagnostic Fault Information

Circuit	Short to Ground	Open/High Resistance	Short to Voltage	Signal Performance
High-Voltage Energy Management Communication Enable	P1EF8	P1EF8	--	--

Circuit/System Description

The battery charger compares the high-voltage energy management communication enable hardwire signal with a hybrid powertrain control module 2 serial data message indicating that the high-voltage energy management communication enable signal is active. If the high-voltage energy management communication enable hardwire signal is low when the serial data message indicates it should be high, then DTC P1EF8 is set.

Conditions for Running the DTC

The control module is awake and communicating.

Conditions for Setting the DTC

A short-circuit to earth or an open-circuit may exist on the high- voltage energy communication enable circuit.

Action Taken When the DTC Sets

DTC P1EF8 is a type A DTCs.

Conditions for Clearing the DTC

DTC P1EF8 is a type A DTCs.

Diagnostic Aids

Short-circuit to earth will also set multiple no communication codes for control modules on high-voltage energy serial data bus.

Reference Information

Schematic Reference

- Data Communication Schematics
- Control Module References

Connector End View Reference

Component Connector End Views

Description and Operation

Data Link Communications Description and Operation

Electrical Information Reference

- Circuit Testing
- Connector Repairs
- Testing for Intermittent Conditions and Poor Connections
- Wiring Repairs

Scan Tool Reference

Control Module References for scan tool information

Circuit/System Testing

Note: Use the schematic to identify the control modules B+, ignition, earth, communication enable and serial data circuit terminals.

1. Vehicle OFF, disconnect the X1 harness connector at the T18 battery charger.
2. Vehicle in Service Mode, verify that a test lamp illuminates between the high-voltage energy management communication enable circuit terminal G X1 and earth.
   If the test lamp does not illuminate, test the circuit for a short-circuit to earth or open-circuit/high resistance. If the circuit tests normal, replace the K114B hybrid powertrain control module 2.
3. Vehicle OFF, verify that a test lamp does not illuminate between the high-voltage energy management communication enable circuit terminal G X1 and earth.
   If the test lamp illuminates, test the circuit for a short to voltage. If the circuit tests normal, replace the K114B hybrid powertrain control module 2.
4. If all circuits test normal, replace the T18 battery charger.

Repair Instructions

Perform the Diagnostic Repair Verification after completing the diagnostic procedure.

Control Module References for control module replacement, programming and setup

&#169© Copyright Chevrolet. All rights reserved

DTC P1F06-P1F09

Diagnostic Instructions

- Perform the Diagnostic System Check - Vehicle prior to using this diagnostic procedure.
- Review Strategy Based Diagnosis for an overview of the diagnostic approach.
- Diagnostic Procedure Instructions provides an overview of each diagnostic category.

DTC Descriptors

DTC P1F06 00: Hybrid/EV Battery Interface Control Module 1 Processor Performance

DTC P1F07 00: Hybrid/EV Battery Interface Control Module 2 Processor Performance

DTC P1F08 00: Hybrid/EV Battery Interface Control Module 3 Processor Performance

DTC P1F09 00: Hybrid/EV Battery Interface Control Module 4 Processor Performance

Circuit/System Description

The battery energy control module compares an expected value with a value reported from a hybrid battery interface control module. If the value does not match for a particular battery interface control module, then a DTC is set for the corresponding hybrid battery interface control module. This fault is internal to the battery energy control module and the hybrid battery interface control modules and no external circuits are involved.

Conditions for Running the DTC

The control modules are awake.

Conditions for Setting the DTC

A mismatch between an expected value in the control module and a value received from the external module.

Action Taken When the DTC Sets

DTCs P1F06, P1F07, P1F08, and P1F09 are type A DTCs.

Conditions for Clearing the DTC

- DTCs P1F06, P1F07, P1F08, and P1F09 are type A DTCs.
- Vehicle goes to low-battery power mode.

Diagnostic Aids

If stored only as a history DTC and not retrieved as a current DTC, do not replace the control module.

Circuit/System Verification

Verify that DTC P1F06, P1F07, P1F08, or P1F09 is not set.

If any of the DTCs are set, replace the A4 hybrid/EV battery pack.

Repair Instructions

Perform the Diagnostic Repair Verification after completing the diagnostic procedure.

- Drive Motor Battery Replacement and Shipping Preparation
- Control Module References for control module replacement, programming and setup

&#169© Copyright Chevrolet. All rights reserved

DTC P262B

Diagnostic Instructions

- Perform the Diagnostic System Check - Vehicle prior to using this diagnostic procedure.
- Review Strategy Based Diagnosis for an overview of the diagnostic approach.
- Diagnostic Procedure Instructions provides an overview of each diagnostic category.

DTC Descriptor

DTC P262B 00: Control Module Power Off Timer Performance

Circuit/System Description

This diagnostic applies to internal microprocessor integrity conditions within the control module. No external circuits are involved.

Conditions for Running the DTC

- Vehicle ON.
- The hybrid powertrain control module 2 has been awake for at least 1 minute.
- DTC P0601, P0602, P0603, P0604, P0606, or P062F is not set.

Conditions for Setting the DTC

The control module detects an internal malfunction.

Action Taken When the DTC Sets

DTC P262B is a Type B DTC.

Conditions for Clearing the DTC

DTC P262B is a Type B DTC.

Diagnostic Aids

- This DTC may be stored as a history DTC without affecting the operation of the control module.
- If stored only as a history DTC and not retrieved as a current DTC, do not replace the control module.

Circuit/System Verification

Verify that DTC P262B is not set.

If the DTC is set, replace the control module that set the DTC.

Repair Instructions

Perform the Diagnostic Repair Verification after completing the diagnostic procedure.

Control Module References for control module replacement, programming and setup

&#169© Copyright Chevrolet. All rights reserved

DTC U0001

Diagnostic Instructions

- Perform the Diagnostic System Check - Vehicle prior to using this diagnostic procedure.
- Review Strategy Based Diagnosis for an overview of the diagnostic approach.
- Diagnostic Procedure Instructions provides an overview of each diagnostic category.

DTC Descriptor

DTC U0001 00: High Speed CAN Communication Bus

Circuit Description

Modules connected to the GMLAN serial data circuits monitor for serial data communications on the GMLAN network during normal vehicle operation. Operating information and commands are exchanged among the modules. Each module on GMLAN network maintains a transmit error counter (TEC) and a receive error counter (REC). The counter values increase with detected errors and will decrease with error-free messages. If the TEC value exceeds 255 the controller removes itself from the network and a DTC U0001 will be set.

Conditions for Running the DTC

- Voltage supplied to the module is in the normal operating voltage range.
- The vehicle power mode requires serial data communication to occur.

Conditions for Setting the DTC

A certain number of no valid transmitted messages on the GMLAN serial data circuits are detected by the module.

Action Taken When the DTC Sets

- The module suspends all message transmission.
- The module uses default values for all parameters received on the GMLAN serial data circuits.

- The module inhibits the setting of all other GMLAN communication DTCs.

Conditions for Clearing the DTC

- A current DTC clears when the malfunction is no longer present.
- A history DTC clears when the module ignition cycle counter reaches the reset threshold, without a repeat of the malfunction.

Diagnostic Aids

- This DTC cannot be retrieved with a current status. Diagnosis of current DTC is accomplished via the symptom, Scan Tool Does Not Communicate with GMLAN Device. Refer to Scan Tool Does Not Communicate with High Speed GMLAN Device .
- An intermittent condition is likely to be caused by a short on the GMLAN serial data circuits. Use the Scan Tool Does Not Communicate with GMLAN Device procedure in order to isolate an intermittent condition. Refer to Scan Tool Does Not Communicate with High Speed GMLAN Device .

Reference Information

Schematic Reference

Data Communication Schematics

Connector End View Reference

Component Connector End Views

Description and Operation

Data Link Communications Description and Operation

Electrical Information Reference

- Circuit Testing
- Connector Repairs
- Testing for Intermittent Conditions and Poor Connections
- Wiring Repairs

Scan Tool References

Control Module References for scan tool information

&#169© Copyright Chevrolet. All rights reserved

DTC U0002

Diagnostic Instructions

- Perform the Diagnostic System Check - Vehicle prior to using this diagnostic procedure.
- Review Strategy Based Diagnosis for an overview of the diagnostic approach.
- Diagnostic Procedure Instructions provides an overview of each diagnostic category.

DTC Descriptor

DTC U0002: High Speed CAN Bus

Circuit/System Description

Control modules connected to the high speed GMLAN serial data circuits monitor for serial data communications during normal vehicle operation. Operating information and commands are exchanged among the control modules. The control modules have prerecorded information about what messages are needed to be exchanged on the serial data circuits, for each virtual network. The messages are supervised and also, some periodic messages are used by the receiver module as an availability indication of the transmitter module. The supervision time-out period is 250 ms. Each message contains the identification number of the transmitter module.

Conditions for Running the DTC

- Voltage supplied to the control modules is in the normal operating voltage range.
- The vehicle power mode requires serial data communication to occur.
- The DTC U0001 does not have a current status.

Conditions for Setting the DTC

A supervised periodic message that includes the transmitter module availability has not been received.

Action Taken When the DTC Sets

The control module uses a default value for the missing parameter.

Conditions for Clearing the DTC

- A current DTC clears when the malfunction is no longer present.
- A history DTC clears when the module ignition cycle counter reaches the reset threshold, without a repeat of the malfunction.

Reference Information

Schematic Reference

Data Communication Schematics

Connector End View Reference

Component Connector End Views

Description and Operation

Data Link Communications Description and Operation

Electrical Information Reference

- Circuit Testing
- Connector Repairs
- Testing for Intermittent Conditions and Poor Connections
- Wiring Repairs

Scan Tool Reference

Control Module References for scan tool information

Circuit/System Verification

With a scan tool, attempt to communicate with all control modules.

Circuit/System Testing

1. With a scan tool, verify DTC U0100-U02FF or DTC U2105-U2199 is not set as current.
   If DTC is set, refer to DTC U0100-U02FF or DTC U2105-U2199 .

2. Vehicle OFF, disconnect the applicable control module harness connector.
3. Vehicle OFF, test for less than 10 Ω between the applicable control module earth circuit terminal and earth.
   If greater than the specified range, test the ground circuit for an open/high resistance.
4. Vehicle in Service Mode, verify that a test lamp illuminates between the following circuits of the applicable control module and earth:
   - The battery positive voltage input circuits
   - The battery positive voltage output circuits
   - The ignition voltage input circuits
   - The ignition voltage output circuits
   - The switched battery positive voltage supply circuits

   If the test lamp does not illuminate, test the circuit for an open/high resistance. If the circuit fuse is open, test the circuit for a short to ground. If the circuit tests normal, replace the applicable control module.
5. Vehicle OFF, test for less than 5 Ω between the non-communicating control module GMLAN serial data circuits and the control module reporting DTC U0002.
   If greater than the specified range, test the circuit for an open/high resistance.
6. If all circuits test normal, replace the applicable control module.

Repair Instructions

Perform the Diagnostic Repair Verification after completing the diagnostic procedure.

- Control Module References for control module replacement, setup, and programming.
- GMLAN Wiring Repairs

&#169© Copyright Chevrolet. All rights reserved

DTC U0020

Diagnostic Instructions

- Perform the Diagnostic System Check - Vehicle prior to using this diagnostic procedure.
- Review Strategy Based Diagnosis for an overview of the diagnostic approach.
- Diagnostic Procedure Instructions provides an overview of each diagnostic category.

DTC Descriptor

DTC U0020 00: Low Speed CAN Communication Bus Performance

Circuit/System Description

Control modules connected to the GMLAN serial data circuits monitor for serial data communications during normal vehicle operation. Operating information and commands are exchanged among the control modules. The control modules have programmed information about what messages are needed to be exchanged on the serial data circuits. The messages are also supervised and some periodic messages are used by the receiver module as an availability indication of the transmitter module.

DTC U0020 will set when fewer control modules are detected on the bus before the control modules can learn the other control modules IDs. If the communication bus is opened, or if the control modules power supply is lost when the vehicle is in the OFF power mode, and then placed in the ON power mode, U0020 will set in specific control modules.

Conditions for Running the DTCs

- Voltage at the control modules is in the normal operating voltage range.
- The vehicle power mode requires serial data communication to occur.
- The DTC U2100 does not have a current status.

Conditions for Setting the DTC

A supervised periodic message that includes the transmitter module availability has not been received.

Action Taken When the DTCs Sets

The control module uses a default value for the missing parameter.

Conditions for Clearing the DTC

- A current DTC clears when the malfunction is no longer present.
- A history DTC clears when the control module ignition cycle counter reaches the reset threshold, without a repeat of the malfunction.

Circuit/System Verification

Diagnosis of this DTC is accomplished via the symptom or an additional DTC. Refer to Symptoms - Data Communications and DTC U0100-U02FF .

&#169© Copyright Chevrolet. All rights reserved

DTC U0073 or U2100

Diagnostic Instructions

- Perform the Diagnostic System Check - Vehicle prior to using this diagnostic procedure.
- Review Strategy Based Diagnosis for an overview of the diagnostic approach.
- Diagnostic Procedure Instructions provides an overview of each diagnostic category.

DTC Descriptors

DTC U0073 00: Control Module Communication Bus Off

DTC U0073 71: ECU HS Bus Off

DTC U0073 72: ECU LS Bus Off

DTC U2100 00: Controller Area Network (CAN) Bus Communication

DTC U2100 47: Controller Area Network (CAN) Bus Communication

Circuit/System Description

The serial data circuits are serial data buses are used to communicate information between the control modules. The serial data circuits also connect directly to the data link connector (DLC).

Conditions for Running the DTCs

- Supply voltage at the control modules is in the normal operating range.
- The vehicle power mode requires serial data communications.

Conditions for Setting the DTC

The control module setting the DTC has attempted to establish communications on the serial data circuits more than 3 times in 5 seconds.

Action Taken When the DTCs Sets

- The control module suspends all message transmission.
- The control module uses default values for all parameters received on the serial data circuits.
- In the TCM, DTC U0073 will cause the transmission to go into default gears.
- In the ECM and TCM, DTC U0073 will cause the malfunction indicator lamp (MIL) to illuminate.
- The control module inhibits the setting of all other communication DTCs.

Conditions for Clearing the DTC

- The ECM/TCM modules turn OFF the MIL after 4 consecutive ignition cycles that the diagnostic runs and does not fail.
- A current DTC clears when the malfunction is no longer present.
- A history DTC clears when the module ignition cycle counter reaches the reset threshold of 50, without a repeat of the malfunction.

Circuit/System Verification

1. Refer to Data Link References to determine which serial data system is used for a specific control module.
2. This DTC cannot be retrieved with a current status. Diagnosis is accomplished using the symptom. Refer to Symptoms - Data Communications .

&#169© Copyright Chevrolet. All rights reserved

DTC U0074

Diagnostic Instructions

- Perform the Diagnostic System Check - Vehicle prior to using this diagnostic procedure.
- Review Strategy Based Diagnosis for an overview of the diagnostic approach.
- Diagnostic Procedure Instructions provides an overview of each diagnostic category.

DTC Descriptor

DTC U0074 00: Control Module Powertrain Expansion Communication Bus Off

Diagnostic Fault Information

Circuit	Short to Ground	Open/High Resistance	Short to Voltage	Signal Performance
Powertrain High-Speed GMLAN Serial Data (+)	U0074	U0074, U0100-U02FF*	U0074	-
Powertrain High-Speed GMLAN Serial Data (-)	U0074	U0074, U0100-U02FF*	U0074	-
Earth (auxiliary data connector terminal 5)	-	U0074	--	--
* An open-circuit in only one powertrain high-speed GMLAN serial data circuit may allow degraded communication between the control modules.				

Circuit/System Description

The serial data is transmitted on two twisted wires that allow speeds up to 500 Kb/s. The twisted pair is terminated with two 120 Ω resistors, one is internal to the engine control module (ECM) and the other can be a separate resistor in a connector assembly or in another control module. The resistors are used as the load for the powertrain high-speed GMLAN bus during normal vehicle operation. The powertrain high-speed GMLAN is a differential bus. The powertrain high-speed GMLAN serial data bus (+) and powertrain high-speed GMLAN serial data (-) are driven to opposite extremes from a rest or idle level of approximately 2.5 V. Driving the lines to their extremes, adds 1 V to the powertrain high-speed GMLAN serial data bus (+) circuit and subtracts 1 V from the powertrain high-speed GMLAN serial data bus (-) circuit. If serial data is lost, control modules will set a no communication code against the non-communicating control module. Note that a loss of serial data DTC does not represent a failure of the module that set it.

The powertrain high-speed GMLAN serial data circuits connect directly to the auxiliary data connector. The scan tool does not communicate with powertrain high-speed GMLAN bus.

Conditions for Running the DTC

- Supply voltage to the control modules are in the normal operating range.
- The vehicle power mode requires serial data communications.

Conditions for Setting the DTC

The control module setting the DTC has attempted to establish communication on the powertrain high-speed GMLAN serial data circuits more than 3 times.

Action Taken When the DTC Sets

- The module suspends all message transmission.
- The MIL and battery indicators will illuminate, along with several DIC messages.
- DTC U0074 is a type A DTC.

Conditions for Clearing the DTC

- A current DTC clears when the malfunction is no longer present.
- A history DTC clears when the module ignition cycle counter reaches the reset threshold, without a repeat of the malfunction.
- DTC U0074 is a type A DTC.

Diagnostic Aids

- Sometimes, while diagnosing a specific customer concern or after a repair, you may notice a history U-code present. However, there is no associated "current" or "active" status. Loss-of- communication U-codes such as these can set for a variety of reasons. Many times, they are transparent to the vehicle operator and technician, and/or have no associated symptoms. Eventually, they will erase themselves automatically after a number of fault-free ignition cycles. This condition would most likely be attributed to one of these scenarios:
  - A control module on the data communication circuit was disconnected while the communication circuit is awake.
  - Power to one or more control modules was interrupted during diagnosis.
  - A low battery condition was present, so some control modules stop communicating when battery voltage drops below a certain threshold.
  - Battery power was restored to the vehicle and control modules on the communication circuit did not all re-initialise at the same time.
  - If a loss-of-communication U-code appears in history for no apparent reason, it is most likely associated with one of the scenarios above. These are all temporary conditions and should never be interpreted as an intermittent fault, causing you to replace a part.
- Do not replace a control module reporting a U-code. The U-code identifies which control module needs to be diagnosed for a communication issue.
- Communication may be available between the control module and the scan tool with one or more GMLAN serial data systems inoperative. This condition is due to the control module using multiple GMLAN busses.
- The engine will not start when there is a total malfunction of the powertrain high-speed GMLAN serial data bus.

- Use Data Link References to determine which control modules connect to the powertrain high-speed GMLAN serial data bus.

Reference Information

Schematic Reference

- Data Communication Schematics
- Control Module References

Connector End View Reference

Component Connector End Views

Description and Operation

Data Link Communications Description and Operation

Electrical Information Reference

- Circuit Testing
- Connector Repairs
- Testing for Intermittent Conditions and Poor Connections
- Wiring Repairs

Scan Tool Reference

Control Module References for scan tool information

Circuit/System Testing

Note: Some control modules with an internal terminating resistor have a loop in the harness that connects the internal terminating resistor to the serial data circuit. When wired this way, test these loop circuits for the appropriate failure mode short to voltage, short to ground, or open/high resistance prior to replacing the control module for each of the following tests.

Each control module may need to be disconnected to isolate a circuit fault. Use the schematic to identify the following:

- Control modules the vehicle is equipped with
- Powertrain high-speed GMLAN serial data circuit terminating resistors
  Control module locations on the powertrain high-speed GMLAN serial data circuits

-
- Each control module's powertrain high-speed GMLAN serial data circuit terminals

1. Disconnect the scan tool from the X84 data link connector (DLC). The following tests will be done at the X84B auxiliary data connector.
2. Vehicle OFF, and all vehicle systems OFF, all keys at least 3 metres away from vehicle, all access doors closed. It may take up to 2 minutes for all vehicle systems to power down. Test for less than 10 Ω between the ground circuit terminal 5 and ground.
   If greater than the specified range, test the ground circuit for an open/high resistance.
3. Vehicle in Service Mode, test for less than 4.5 V between the serial data circuits listed below and earth:
   - Terminal 12
   - Terminal 13

   If greater than the specified range, test the serial data circuit for a short to voltage. Refer to Testing the Serial Data Circuits for a Short to Voltage.
4. Vehicle OFF, and all vehicle systems OFF, all keys at least 3 metres away from vehicle, all access doors closed. It may take up to 2 minutes for all vehicle systems to power down. Test for greater than 100 Ω between the serial data circuits listed below and ground:
   - Terminal 12
   - Terminal 13

   If not the specified value, test the serial data circuit for a short to ground. Refer to Testing the Serial Data Circuits for a Short to Ground.
5. Test for 50-70 Ω between the serial data circuits terminal 3 and terminal 11.
   If less than 35 Ω, test for a short between the serial data circuits. Refer to Testing the Serial Data Circuits for a Short between the Circuits.
   If 35-50 Ω there may be a third terminating resistor between the serial data circuits. This can happen if the incorrect control module is installed. Some control modules are available with and without the terminating resistors installed to reduce the need of terminating resistors in the wiring harness.
   If greater than 70 Ω but less than infinite, test the serial data circuit for an open/high resistance. Refer to Testing the Serial Data Circuits for an Open/High Resistance.
   If infinite, test the serial data circuits between the X84B auxiliary data connector and the first connection to the serial data circuit for an open-circuit/high resistance.
6. If the serial data circuits test normal, refer to Testing the Control Module Circuits.

Testing the Serial Data Circuits for a Short to Voltage

1. Vehicle OFF, disconnect the harness connectors with the powertrain high-speed GMLAN serial data circuits at an easily accessible control module.
2. Vehicle in Service Mode, test for greater than 4.5 V between each serial data circuit at the control module connector that was just disconnected and earth. Verify that one or more serial data circuits are greater than 4.5 V.
   If all serial data circuits are less than the specified range, replace the control module that was disconnected.
3. Vehicle OFF, disconnect the harness connectors with the powertrain high-speed GMLAN serial data circuits at another control module, in the direction of the circuit shorted to voltage.
4. Vehicle in Service Mode, test for greater than 4.5 V between the serial data circuits at the control module connector that was just disconnected and earth. Verify that one or more serial data circuits are greater than 4.5 V.
   If all serial data circuits are less than the specified range, replace the control module that was just disconnected.
5. Repeat step 3 until one of the follow conditions are isolated:
   - A short to voltage on the serial data circuit between 2 control modules or splice packs, if equipped

- A short to voltage on the serial data circuit between a control module and a terminating resistor

Testing the Serial Data Circuits for a Short to Ground

1. Vehicle OFF, disconnect the harness connectors with the powertrain high-speed GMLAN serial data circuits at an easily accessible control module.
2. Vehicle OFF, and all vehicle systems OFF, all keys at least 3 metres away from vehicle, all access doors closed. It may take up to 2 minutes for all vehicle systems to power down. Test for less than 1k Ω between each serial data circuit at the control module connector that was just disconnected and ground. Verify that one or more serial data circuits are less than 1k Ω.
   If all serial data circuits are greater than the specified range, replace the control module that was disconnected.
3. Disconnect the harness connectors with the powertrain high- speed GMLAN serial data circuits at another control module, in the direction of the circuit shorted to earth.
4. Vehicle OFF, and all vehicle systems OFF, all keys at least 3 metres away from vehicle, all access doors closed. It may take up to 2 minutes for all vehicle systems to power down. Test for less than 1k Ω between the serial data circuits at the control module connector that was just disconnected and ground. Verify that one or more serial data circuits are less than 1k Ω.
   If greater than the specified range for all serial data circuits, replace the control module that was just disconnected.
5. Repeat step 3 until one of the follow conditions are isolated:
   - A short to ground on the serial data circuit between 2 control modules or splice packs, if equipped
   - A short to ground on the serial data circuit between a control module and a terminating resistor
   - A short-circuit to earth on the serial data circuit between the X84B auxiliary data connector and the first control module or splice pack, if equipped

Testing the Serial Data Circuits for a Short between the Circuits

1. Vehicle OFF, disconnect the harness connectors with the powertrain high-speed GMLAN serial data circuits at an easily accessible control module that is not communicating.
2. Vehicle OFF, and all vehicle systems OFF, all keys at least 3 metres away from vehicle, all access doors closed. It may take up to 2 minutes for all vehicle systems to power down. Test for less than 110 Ω between each pair of serial data circuits at the control module connector that was just disconnected. Verify that one pair of serial data circuits are less than 110 Ω.
   If each pair of serial data circuits is greater than the specified range, replace the control module that was disconnected.
3. Connect the harness connectors at the control module that was disconnected.
4. Disconnect the harness connectors with the powertrain high- speed GMLAN serial data circuits at another control module, in the direction of the circuits shorted together.
5. Vehicle OFF, and all vehicle systems OFF, all keys at least 3 metres away from vehicle, all access doors closed. It may take up to 2 minutes for all vehicle systems to power down. Test for less than 110 Ω between each pair of serial data circuits at the control module connector that was just disconnected. Verify that one pair of serial data circuits are less than 110 Ω.
   If each pair of serial data circuits is greater than the specified range, replace the control module that was just disconnected.
6. Repeat step 3 until one of the following conditions are isolated:
   - Serial data circuits shorted together between 2 control modules
   - Serial data circuits shorted together between a control module and a terminating resistor
   - A shorted terminating resistor

- Serial data circuits shorted together between the X84B auxiliary data connector and the first control module or splice pack, if equipped

Testing the Serial Data Circuits for an Open/High Resistance

1. Vehicle OFF, disconnect the harness connectors with the powertrain high-speed GMLAN serial data circuits at an easily accessible control module that is not communicating.
2. Vehicle OFF, and all vehicle systems OFF, all keys at least 3 metres away from vehicle, all access doors closed. It may take up to 2 minutes for all vehicle systems to power down. Test for greater than 130 Ω between each pair of serial data circuits at the control module connector that was just disconnected. Verify that one pair of serial data circuits are greater than 130 Ω.
   If each pair of serial data circuits is less than the specified range, replace the control module that was disconnected.
3. Connect the harness connectors at the control module that was disconnected.
4. Disconnect the harness connectors with the powertrain high- speed GMLAN serial data circuits at another control module, in the direction of the open circuit.
5. Vehicle OFF, and all vehicle systems OFF, all keys at least 3 metres away from vehicle, all access doors closed. It may take up to 2 minutes for all vehicle systems to power down. Test for greater than 130 Ω between each pair of serial data circuits at the control module connector that was just disconnected. Verify that one pair of serial data circuits is greater than 130 Ω.
   If each pair of serial data circuits is less than the specified range, replace the control module that was just disconnected.
6. Repeat step 3 until one of the following conditions are isolated:
   - An open/high resistance on the serial data circuit between 2 control modules
   - An open/high resistance on the serial data circuit between a control module and a terminating resistor
   - An open/high resistance terminating resistor

Testing the Control Module Circuits

1. Vehicle OFF, disconnect the harness connectors at an easily accessible control module that is not communicating.
2. Vehicle OFF, and all vehicle systems OFF, all keys at least 3 metres away from vehicle, all access doors closed. It may take up to 2 minutes for all vehicle systems to power down. Test for less than 10 Ω between each earth circuit terminal and earth, and at the control module connector that was just disconnected.
   If greater than the specified range, test the earth circuit and earth connection for an open-circuit/high resistance.
3. Vehicle OFF, verify that a test lamp does not illuminate between each ignition circuit terminal and earth.
   If the test lamp does illuminate, test the ignition circuit for a short to voltage. If the circuits test normal, replace the appropriate control module.
4. Vehicle in Service Mode, verify that a test lamp illuminates between each ignition circuit terminal and earth.
   If the test lamp does not illuminate, test the ignition circuit for a short to ground or an open/high resistance. If the circuits test normal, replace the appropriate control module.
5. Vehicle OFF, connect the harness connectors at the control module that was disconnected.
6. Repeat step 1 at another control module that is not communicating until one of the following conditions are isolated:
   - An open-circuit/high resistance on the earth circuit or earth connection
   - A short-circuit to voltage, a short-circuit to earth or an open-circuit/high resistance on the ignition circuit

Repair Instructions

Perform the Diagnostic Repair Verification after completing the diagnostic procedure.

- GMLAN Wiring Repairs
- Control Module References for control module replacement, programming and setup

&#169© Copyright Chevrolet. All rights reserved

DTC U0077

Diagnostic Instructions

- Perform the Diagnostic System Check - Vehicle prior to using this diagnostic procedure.
- Review Strategy Based Diagnosis for an overview of the diagnostic approach.
- Diagnostic Procedure Instructions provides an overview of each diagnostic category.

DTC Descriptor

DTC U0077 00: Control Module Chassis Expansion Communication Bus Off

Circuit/System Description

The GMLAN high speed chassis expansion bus functions the same as the GMLAN high speed bus, and the two buses operate in parallel. The expansion chassis bus was added to reduce message congestion on the primary high speed bus. Since the GMLAN high speed chassis bus and primary GMLAN high speed bus operate in the same manner, the diagnostics for each are the same.

The chassis high-speed GMLAN serial data circuits also connect directly to the data link connector (DLC).

Conditions for Running the DTC

- Supply voltage to the control modules are in the normal operating range.
- The vehicle power mode requires serial data communications.

Conditions for Setting the DTC

The control module setting the DTC has attempted to establish communications on the chassis high-speed GMLAN serial data circuits more than 3 times.

Action Taken When the DTC Sets

- The module suspends all message transmission.

- The control module uses default values for all parameters received on the serial data circuits.
- The control module inhibits the setting of all other communication DTCs.
- DTC U0077 is a type A DTC.

Conditions for Clearing the DTC

- A current DTC clears when the malfunction is no longer present.
- A history DTC clears when the module ignition cycle counter reaches the reset threshold, without a repeat of the malfunction.
- DTC U0077 is a type A DTC.

Circuit/System Verification

Diagnosis is accomplished using the symptom. Refer to Scan Tool Does Not Communicate with Chassis High Speed GMLAN Device .

&#169© Copyright Chevrolet. All rights reserved

DTC U007A

Diagnostic Instructions

- Perform the Diagnostic System Check - Vehicle prior to using this diagnostic procedure.
- Review Strategy Based Diagnosis for an overview of the diagnostic approach.
- Diagnostic Procedure Instructions provides an overview of each diagnostic category.

DTC Descriptor

DTC U007A 00: Control Module High Voltage Energy Management Communication Bus Off

Diagnostic Fault Information

Circuit	Short to Ground	Open/High Resistance	Short to Voltage	Signal Performance
High-Voltage Energy Management High Speed GMLAN Serial Data (+)	U007A*	U007A*	U007A*	-
High-Voltage Energy Management High Speed GMLAN Serial Data (-)	U007A*	U007A*	U007A*	-
Earth (auxiliary data connector terminal 5)	-	U007A*	--	--
* Other DTCs may be set with this fault.				

Circuit/System Description

Control modules connected to the high-voltage energy management high speed GMLAN serial data circuits monitor for serial data communications during normal vehicle operation. Operating information and commands are exchanged among the control modules when the vehicle is on. The high-voltage energy management high speed GMLAN serial data bus uses a terminating resistor that is in parallel with the high-voltage energy management high speed GMLAN (+) and (-) circuits.

The high-voltage energy management high speed GMLAN serial data circuits connect directly to the auxiliary data connector. The scan tool does not communicate with high-voltage energy management high speed GMLAN bus.

Conditions for Running the DTC

- Supply voltage to the control modules are in the normal operating range.

- The vehicle power mode requires serial data communications.

Conditions for Setting the DTC

The control module setting the DTC has attempted to establish communication on the high-voltage energy management high- speed GMLAN serial data circuits more than 3 times.

Action Taken When the DTC Sets

- The module suspends all message transmission.
- The control module uses default values for all parameters received on the serial data circuits.
- The control module inhibits the setting of all other communication DTCs.

Conditions for Clearing the DTC

- A current DTC clears when the malfunction is no longer present.
- A history DTC clears when the module ignition cycle counter reaches the reset threshold, without a repeat of the malfunction.

Diagnostic Aids

- Sometimes, while diagnosing a specific customer concern or after a repair, you may notice a history U-code present. However, there is no associated "current" or "active" status. Loss-of- communication U-codes such as these can set for a variety of reasons. Many times, they are transparent to the vehicle operator and technician, and/or have no associated symptoms. Eventually, they will erase themselves automatically after a number of fault-free ignition cycles. This condition would most likely be attributed to one of these scenarios:
  - A control module on the data communication circuit was disconnected while the communication circuit is awake.
  - Power to one or more control modules was interrupted during diagnosis.
  - A low battery condition was present, so some control modules stop communicating when battery voltage drops below a certain threshold.
  - Battery power was restored to the vehicle and control modules on the communication circuit did not all re-initialise at the same time.
  - If a loss-of-communication U-code appears in history for no apparent reason, it is most likely associated with one of the scenarios above. These are all temporary conditions and should never be interpreted as an intermittent fault, causing you to replace a part.
- Do not replace a control module reporting a U-code. The U-code identifies which control module needs to be diagnosed for a communication issue.
- Communication may be available between the control module and the scan tool with one or more GMLAN serial data systems inoperative. This condition is due to the control module using multiple GMLAN busses.
- The engine may not start when there is a total malfunction of the high-voltage energy management high-speed GMLAN serial data bus.
- Use Data Link References to determine which control modules connect to the high-voltage energy management high-speed GMLAN serial data bus.

Reference Information

Schematic Reference

- Data Communication Schematics
- Control Module References

Connector End View Reference

Component Connector End Views

Description and Operation

Data Link Communications Description and Operation

Electrical Information Reference

- Circuit Testing
- Connector Repairs
- Testing for Intermittent Conditions and Poor Connections
- Wiring Repairs

Scan Tool Reference

Control Module References for scan tool information

Special Tools

EL-48900 HEV Safety Kit

For equivalent regional tools, refer to Special Tools .

Circuit/System Testing

Danger: Always perform the High-Voltage Disabling procedure prior to servicing any High-Voltage component or connection. Personal Protection Equipment (PPE) and proper procedures must be followed.

The High-Voltage Disabling procedure will perform the following tasks:

- Identify how to disable high-voltage.
- Identify how to test for the presence of high-voltage.

- Identify conditions under which high voltage is always present and personal protection equipment (PPE) and proper procedures must be followed.

Before working on any high-voltage system, be sure to wear the following Personal Protection Equipment:

- Safety glasses with appropriate side shields when within 15 metres (50 feet) of the vehicle, either indoors or outdoors.
- Certified and up-to-date Class "0" Insulation gloves rated at 1,000 V with leather protectors.
  - Visually and functionally inspect the gloves before use.
  - Wear the Insulation gloves with leather protectors at all times when working with the high-voltage battery assembly, whether the system is energised or not.

Failure to follow the procedures exactly as written may result in serious injury or death.

Note: Some control modules with an internal terminating resistor have a loop in the harness that connects the internal terminating resistor to the serial data circuit. When wired this way, test these loop circuits for the appropriate failure mode short to voltage, short to ground, or open/high resistance prior to replacing the control module for each of the following tests.

Each control module may need to be disconnected to isolate a circuit fault. Use the schematic to identify the following:

- Control modules the vehicle is equipped with
- High-voltage energy management high-speed GMLAN serial data circuit terminating resistors
- Control module locations on the high-voltage energy management high-speed GMLAN serial data circuits
- Each control module's high-voltage energy management high- speed GMLAN serial data circuit terminals

1. Perform the High-Voltage Disabling procedure before proceeding with this diagnostic. Refer to High Voltage Disabling .
2. Reconnect the 12 V battery after performing the high- voltage disabling procedure.
3. Disconnect the scan tool from the X84 data link connector (DLC). The following tests will be done at the X84B auxiliary data connector.
4. Vehicle OFF, and all vehicle systems OFF, all keys at least 3 metres away from vehicle, all access doors closed. It may take up to 2 minutes for all vehicle systems to power down. Test for less than 10 Ω between the ground circuit terminal 5 and ground.
   If greater than the specified range, test the ground circuit for an open/high resistance.
5. Vehicle in Service Mode, test for less than 4.5 V between the serial data circuits listed below and earth:
   - Terminal 3
   - Terminal 11

   If greater than the specified range, test the serial data circuit for a short to voltage. Refer to Testing the Serial Data Circuits for a Short to Voltage.
6. Vehicle OFF, and all vehicle systems OFF, all keys at least 3 metres away from vehicle, all access doors closed. It may take up to 2 minutes for all vehicle systems to power down. Test for greater than 100 Ω between the serial data circuits listed below and ground:
   - Terminal 3
   - Terminal 11

   If not the specified value, test the serial data circuit for a short to ground. Refer to Testing the Serial Data Circuits for a Short to Ground.
7. Test for 50-70 Ω between the serial data circuits terminal 3 and terminal 11.
   If less than 35 Ω, test for a short between the serial data circuits. Refer to Testing the Serial Data Circuits for a Short between the Circuits.
   If 35-50 Ω there may be a third terminating resistor between the serial data circuits. This can happen if the incorrect control module is installed. Some control modules

are available with and without the terminating resistors installed to reduce the need of terminating resistors in the wiring harness.

If greater than 70 Ω but less than infinite, test the serial data circuit for an open/high resistance. Refer to Testing the Serial Data Circuits for an Open/High Resistance.

If infinite, test the serial data circuits between the X84B auxiliary data connector and the first connection to the serial data circuit for an open-circuit/high resistance.

8. If the serial data circuits test normal, refer to Testing the Control Module Circuits.

Testing the Serial Data Circuits for a Short to Voltage

1. Vehicle OFF, disconnect the harness connectors with the high- voltage energy management high-speed GMLAN serial data circuits at an easily accessible control module.
2. Vehicle in Service Mode, test for greater than 4.5 V between each serial data circuit at the control module connector that was just disconnected and earth. Verify that one or more serial data circuits are greater than 4.5 V.

   If all serial data circuits are less than the specified range, replace the control module that was disconnected.
3. Vehicle OFF, disconnect the harness connectors with the high- voltage energy management high-speed GMLAN serial data circuits at another control module, in the direction of the circuit shorted to voltage.
4. Vehicle in Service Mode, test for greater than 4.5 V between the serial data circuits at the control module connector that was just disconnected and earth. Verify that one or more serial data circuits are greater than 4.5 V.

   If all serial data circuits are less than the specified range, replace the control module that was just disconnected.
5. Repeat step 3 until one of the follow conditions are isolated:
   - A short to voltage on the serial data circuit between 2 control modules or splice packs, if equipped
   - A short to voltage on the serial data circuit between a control module and a terminating resistor

Testing the Serial Data Circuits for a Short to Ground

1. Vehicle OFF, disconnect the harness connectors with the high- voltage energy management high-speed GMLAN serial data circuits at an easily accessible control module.
2. Vehicle OFF, and all vehicle systems OFF, all keys at least 3 metres away from vehicle, all access doors closed. It may take up to 2 minutes for all vehicle systems to power down. Test for less than 1k Ω between each serial data circuit at the control module connector that was just disconnected and ground. Verify that one or more serial data circuits are less than 1k Ω.

   If all serial data circuits are greater than the specified range, replace the control module that was disconnected.
3. Disconnect the harness connectors with the high-voltage energy management high-speed GMLAN serial data circuits at another control module, in the direction of the circuit shorted to earth.
4. Vehicle OFF, and all vehicle systems OFF, all keys at least 3 metres away from vehicle, all access doors closed. It may take up to 2 minutes for all vehicle systems to power down. Test for less than 1k Ω between the serial data circuits at the control module connector that was just disconnected and ground. Verify that one or more serial data circuits are less than 1k Ω.

   If greater than the specified range for all serial data circuits, replace the control module that was just disconnected.
5. Repeat step 3 until one of the follow conditions are isolated:
   - A short to ground on the serial data circuit between 2 control modules or splice packs, if equipped
   - A short to ground on the serial data circuit between a control module and a terminating resistor

Testing the Serial Data Circuits for a Short between the Circuits

1. Vehicle OFF, disconnect the harness connectors with the high- voltage energy management high-speed GMLAN serial data circuits at an easily accessible control module that is not communicating.
2. Vehicle OFF, and all vehicle systems OFF, all keys at least 3 metres away from vehicle, all access doors closed. It may take up to 2 minutes for all vehicle systems to power down. Test for less than 110 Ω between each pair of serial data circuits at the control module connector that was just disconnected. Verify that one pair of serial data circuits are less than 110 Ω.
   If each pair of serial data circuits is greater than the specified range, replace the control module that was disconnected.
3. Connect the harness connectors at the control module that was disconnected.
4. Disconnect the harness connectors with the high-voltage energy management high-speed GMLAN serial data circuits at another control module, in the direction of the circuits shorted together.
5. Vehicle OFF, and all vehicle systems OFF, all keys at least 3 metres away from vehicle, all access doors closed. It may take up to 2 minutes for all vehicle systems to power down. Test for less than 110 Ω between each pair of serial data circuits at the control module connector that was just disconnected. Verify that one pair of serial data circuits are less than 110 Ω.
   If each pair of serial data circuits is greater than the specified range, replace the control module that was just disconnected.
6. Repeat step 3 until one of the following conditions are isolated:
   - Serial data circuits shorted together between 2 control modules
   - Serial data circuits shorted together between a control module and a terminating resistor
   - A shorted terminating resistor

Testing the Serial Data Circuits for an Open/High Resistance

1. Vehicle OFF, disconnect the harness connectors with the high- voltage energy management high-speed GMLAN serial data circuits at an easily accessible control module that is not communicating.
2. Vehicle OFF, and all vehicle systems OFF, all keys at least 3 metres away from vehicle, all access doors closed. It may take up to 2 minutes for all vehicle systems to power down. Test for greater than 130 Ω between each pair of serial data circuits at the control module connector that was just disconnected. Verify that one pair of serial data circuits are greater than 130 Ω.
   If each pair of serial data circuits is less than the specified range, replace the control module that was disconnected.
3. Connect the harness connectors at the control module that was disconnected.
4. Disconnect the harness connectors with the high-voltage energy management high-speed GMLAN serial data circuits at another control module, in the direction of the open circuit.
5. Vehicle OFF, and all vehicle systems OFF, all keys at least 3 metres away from vehicle, all access doors closed. It may take up to 2 minutes for all vehicle systems to power down. Test for greater than 130 Ω between each pair of serial data circuits at the control module connector that was just disconnected. Verify that one pair of serial data circuits is greater than 130 Ω.
   If each pair of serial data circuits is less than the specified range, replace the control module that was just disconnected.
6. Repeat step 3 until one of the following conditions are isolated:
   - An open/high resistance on the serial data circuit between 2 control modules
   - An open/high resistance on the serial data circuit between a control module and a terminating resistor

- An open/high resistance terminating resistor

Testing the Control Module Circuits

1. Vehicle OFF, disconnect the harness connectors at an easily accessible control module that is not communicating.
2. Vehicle OFF, and all vehicle systems OFF, all keys at least 3 metres away from vehicle, all access doors closed. It may take up to 2 minutes for all vehicle systems to power down. Test for less than 10 Ω between each earth circuit terminal and earth, and at the control module connector that was just disconnected.
   If greater than the specified range, test the earth circuit and earth connection for an open-circuit/high resistance.
3. Vehicle OFF, verify that a test lamp does not illuminate between each ignition circuit terminal and earth.
   If the test lamp does illuminate, test the ignition circuit for a short to voltage. If the circuits test normal, replace the appropriate control module.
4. Vehicle in Service Mode, verify that a test lamp illuminates between each ignition circuit terminal and earth.
   If the test lamp does not illuminate, test the ignition circuit for a short to ground or an open/high resistance. If the circuits test normal, replace the appropriate control module.
5. Vehicle OFF, connect the harness connectors at the control module that was disconnected.
6. Repeat step 1 at another control module that is not communicating until one of the following conditions are isolated:
   - An open-circuit/high resistance on the earth circuit or earth connection
   - A short-circuit to voltage, a short-circuit to earth or an open-circuit/high resistance on the ignition circuit

Repair Instructions

Perform the Diagnostic Repair Verification after completing the diagnostic procedure.

- GMLAN Wiring Repairs
- Control Module References for control module replacement, programming and setup

&#169© Copyright Chevrolet. All rights reserved

DTC U0078

Diagnostic Instructions

- Perform the Diagnostic System Check - Vehicle prior to using this diagnostic procedure.
- Review Strategy Based Diagnosis for an overview of the diagnostic approach.
- Diagnostic Procedure Instructions provides an overview of each diagnostic category.

DTC Descriptor

DTC U0078 00: Control Module Low Speed Communication Bus Off

Circuit/System Description

The low speed GMLAN serial data bus is used to communicate information between the control modules. The serial data is transmitted over a single wire to the appropriate control modules. The low speed GMLAN serial data circuits also connect directly to the data link connector (DLC).

Conditions for Running the DTC

- Supply voltage to the control modules are in the normal operating range.
- The vehicle power mode requires serial data communications.

Conditions for Setting the DTC

The control module setting the DTC has attempted to establish communications on the serial data circuits more than 3 times in 5 seconds.

Action Taken When the DTC Sets

- The control module suspends all message transmission.
- The control module uses default values for all parameters received on the serial data circuits.
- The control module inhibits the setting of all other communication DTCs.

Conditions for Clearing the DTC

- A current DTC clears when the malfunction is no longer present.
- A history DTC clears when the module ignition cycle counter reaches the reset threshold of 50, without a repeat of the malfunction.

Circuit/System Verification

Diagnosis is accomplished using the symptom. Refer to Scan Tool Does Not Communicate with Low Speed GMLAN Device .

&#169© Copyright Chevrolet. All rights reserved

DTC U0100-U02FF

Diagnostic Instructions

- Perform the Diagnostic System Check - Vehicle prior to using this diagnostic procedure.
- Review Strategy Based Diagnosis for an overview of the diagnostic approach.
- Diagnostic Procedure Instructions provides an overview of each diagnostic category.

DTC Descriptor

Refer to Control Module U Code List .

Diagnostic Fault Information

Circuit	Short to Ground	Open/High Resistance	Short to Voltage	Signal Performance
Module B+	U0100-U02FF	U0100-U02FF	--	--
Module Ignition	U0100-U02FF	U0100-U02FF	--	--
BCM Accessory Wake-up Serial Data	U1814	U0100-U02FF	--	--
BCM Serial Data Communication Enable	U2099	U0100-U02FF	--	--
Hybrid Powertrain Control Module 2 Accessory Wake-up Serial Data 2	P06E4	U0100-U02FF	--	--
Hybrid Powertrain Control Module 2 High-Voltage Energy Management Communication Enable	P1EB9	U0100-U02FF	--	--
Low Speed GMLAN Serial Data	1	U0100-U02FF	1	--
High Speed GMLAN Serial Data (+)	2	U0100-U02FF	2	--
High Speed GMLAN Serial Data (-)	2	U0100-U02FF	2	--
Mid Speed GMLAN Serial Data (+)	3	U0100-U02FF	3	--
Mid Speed GMLAN Serial Data (-)	3	U0100-U02FF	3	--
Chassis High Speed GMLAN Serial Data (+)	U0077	U0077, U0100-U02FF	U0077	-
Chassis High Speed GMLAN Serial Data (-)	U0077	U0077, U0100-U02FF	U0077	-
Powertrain High-Speed GMLAN Serial Data (+)	U0074	U0074, U0100-U02FF	U0074	-

Powertrain High-Speed GMLAN Serial Data (-)	U0074	U0074, U0100-U02FF	U0074	-
High-Voltage Energy Management High Speed GMLAN Serial Data (+)	U007A	U007A, U0100-U02FF	U007A	-
High-Voltage Energy Management High Speed GMLAN Serial Data (-)	U007A	U007A, U0100-U02FF	U007A	--
Module Ground	-	U0100-U02FF	--	--
1. Scan Tool Does Not Communicate With Low-Speed GMLAN Device 2. Scan Tool Does Not Communicate With High-Speed GMLAN Device 3. Scan Tool Does Not Communicate With Mid-Speed GMLAN Device				

Circuit/System Description

The serial data circuit is the means by which the control modules in the vehicle communicate with each other. Once the scan tool is connected to the serial data circuit through the data link connector (DLC) on the driver's side, the scan tool can be used to monitor each control module for diagnostic purposes and to check for diagnostic trouble codes (DTCs). The auxiliary data connector on the passenger side is used for expansion buses. When the vehicle is on, each control module communicating on the serial data circuit sends a state of health (SOH) message to ensure that the control module is operating properly. When a control module stops communicating on the serial data circuit, for example if the control module loses power or ground, the SOH message it normally sends on the serial data circuit disappears. Other control modules on the serial data circuit, which expect to receive that SOH message, detect its absence; those control modules in turn set a DTC associated with the loss of SOH of the non-communicating control module. The DTC is unique to the control module which is not communicating and one or more control modules may set the same exact code. A loss of serial data communications DTC does not represent a failure of the control modules that contain the stored code.

Conditions for Running the DTC

The system voltage is between 9–16 V.

Conditions for Setting the DTC

A supervised periodic message that includes the transmitter module availability has not been received.

Action Taken When the DTC Sets

- Specific subsystems will not function.
- DTC U0100 in the TCM will cause the transmission to go into default gears.
- Both DTC U0100 in the TCM and DTC U0101 in the ECM will cause the malfunction indicator lamp (MIL) to illuminate.

Conditions for Clearing the DTC

- The ECM/TCM module turns OFF the MIL after 4 consecutive ignition cycles that the diagnostic runs and does not fail.
- A current DTC clears when the malfunction is no longer present.

- A history DTC clears when the control module ignition cycle counter reaches the reset threshold of 50, without a repeat of the malfunction.

Diagnostic Aids

- Sometimes, while diagnosing a specific customer concern or after a repair, you may notice a history U-code present. However, there is no associated "current" or "active" status. Loss-of- communication U-codes such as these can set for a variety of reasons. Many times, they are transparent to the vehicle operator and technician, and/or have no associated symptoms. Eventually, they will erase themselves automatically after a number of fault-free ignition cycles. This condition would most likely be attributed to one of these scenarios:
  - A control module on the data communication circuit was disconnected while the communication circuit is awake.
  - Power to one or more control modules was interrupted during diagnosis.
  - A low battery condition was present, so some control modules stop communicating when battery voltage drops below a certain threshold.
  - Battery power was restored to the vehicle and control modules on the communication circuit did not all re-initialise at the same time.
  - If a loss-of-communication U-code appears in history for no apparent reason, it is most likely associated with one of the scenarios above. These are all temporary conditions and should never be interpreted as an intermittent fault, causing you to replace a part.
- A control module may have a U-code stored in history that does not require any repairs. Issues with late or corrupted messages between control modules can be temporary with no apparent symptom or complaint; this does not mean the control module is faulty. Do not replace a control module based only on a history U-code.
- Do not replace a control module reporting a U-code. The U-code identifies which control module needs to be diagnosed for a communication issue.
- Communication may be available between the control module and the scan tool with one or more GMLAN serial data systems inoperative. This condition is due to the control module using multiple GMLAN busses.
- Use Data Link References to determine what GMLAN serial data communications the non communicating control module uses.
- Some control modules may not have internal protection for specific control circuits and may open a B+ or ignition fuse. If a fuse is open and the B+ or ignition circuit is not shorted to ground, ensure none of the control circuits are shorted to ground before replacing the control module.
- Some intermittent communication concerns may be caused by fretting corrosion on the serial data circuit terminals. Inspect all connectors at the control module that set the communication DTC, the control module that the communication DTC was set against and any in-line harness connectors between the two control modules. Do not replace a control module based only on fretting corrosion. Refer to bulletin 09-06-03-004 for assistance with the diagnosis and repair of this condition..
- This diagnostic can be used for any control module that is not communicating, regardless of the type of serial data circuit it is connected to, providing the vehicle is equipped with the control module.

Reference Information

Schematic Reference

- Data Communication Schematics
- Control Module References

Connector End View Reference

Component Connector End Views

Description and Operation

Data Link Communications Description and Operation

Electrical Information Reference

- Circuit Testing
- Connector Repairs
- Testing for Intermittent Conditions and Poor Connections
- Wiring Repairs

Scan Tool Reference

Control Module References for scan tool information

Special Tools

EL-48900 HEV Safety Kit

Circuit/System Verification

1. Determine the control module that is not communicating. Refer to Control Module U Code List .
2. Verify that DTC U0073, U0074, U0077, U0078, U007A, P06E4, P1EB9, U1814, U2099, B1325, B1330, B1370, B1380, B1424, B1428, B1440, B1441, B1517, C0800, C0899, C12E1, P0560, or P0562 is not set.
   If any of the DTCs are set, refer to Diagnostic Trouble Code (DTC) List - Vehicle .
3. Engine running for 10 seconds.
4. Vehicle in Service Mode, verify that DTC U0100-U02FF is not set with symptom byte 00.
   If the DTC U0100-U02FF is set with symptom byte 00, refer to Circuit/System Testing.
5. Verify that DTC U0100-U02FF is not set with symptom byte 71 or 72.
   If the DTC U0100-U02FF is set with symptom byte 71 or 72 along with other DTCs set, diagnose all other DTCs first. Refer to Diagnostic Trouble Code (DTC) List - Vehicle .
   If the DTC U0100-U02FF is set with symptom byte 71 or 72 and without other DTCs set, reprogram the control module. If the DTC resets, replace the control module.

Circuit/System Testing

Danger: Always perform the High-Voltage Disabling procedure prior to servicing any High-Voltage component or connection. Personal Protection Equipment (PPE) and proper procedures must be followed.

The High-Voltage Disabling procedure will perform the following tasks:

- Identify how to disable high-voltage.
- Identify how to test for the presence of high-voltage.
- Identify conditions under which high voltage is always present and personal protection equipment (PPE) and proper procedures must be followed.

Before working on any high-voltage system, be sure to wear the following Personal Protection Equipment:

- Safety glasses with appropriate side shields when within 15 metres (50 feet) of the vehicle, either indoors or outdoors.
- Certified and up-to-date Class "0" Insulation gloves rated at 1,000 V with leather protectors.
  - Visually and functionally inspect the gloves before use.
  - Wear the Insulation gloves with leather protectors at all times when working with the high-voltage battery assembly, whether the system is energised or not.

Failure to follow the procedures exactly as written may result in serious injury or death.

Note: Use the schematic to identify the following:

- Control modules the vehicle is equipped with
- Control module locations on each GMLAN serial data busses
- The control module's B+, ignition, earth, accessory wake-up serial data, accessory wake-up serial data 2, serial data communication enable and serial data circuit terminals

1. Using the High-Voltage Module Chart below, verify that the non-communicating control module is not a high-voltage module. If the control module is a high-voltage module, perform the High- Voltage Disabling procedure before proceeding with this diagnostic. Refer to High Voltage Disabling .
2. If high-voltage disabling is required, reconnect the 12 V battery after performing the high-voltage disabling procedure.
3. Vehicle OFF, disconnect the harness connector at the control module that is not communicating.
4. Test for less than 10 Ω between each ground circuit terminal and ground.
   If greater than the specified range, test the ground circuit for an open/high resistance.
5. If equipped, vehicle in Service Mode, verify that a test lamp illuminates between each B+ circuit terminal and earth.
   If the test lamp does not illuminate, test the B+ circuit for a short to ground or an open/high resistance. If the circuit fuse is open, test the control circuits of the control module for a short to ground. If the circuits test normal, replace the control module.
6. If equipped, vehicle in Service Mode, verify that a test lamp illuminates between each ignition circuit terminal and earth.
   If the test lamp does not illuminate, test the ignition circuit for a short to ground or an open/high resistance. If the circuit fuse is open, test the control circuits of the control module for a short to ground. If the circuits test normal, replace the control module.

   Note: Only the high-speed GMLAN modules have a serial data communication enable circuit OR an accessory wake-up serial data circuit OR an accessory wake-up serial data 2 circuit. Either the K9 BCM or the K114B hybrid powertrain control module 2 is the output for these circuits. Refer to the control module schematics to identify which control modules have these circuits and which control module is the output for these circuits.

7. If equipped, vehicle in Service Mode, verify that a test lamp illuminates between the serial data communication enable circuit terminal OR the accessory wake-up serial data circuit terminal coming from the K9 BCM and earth.
   If the test lamp does not illuminate, test the entire circuit, including the B+ circuit to the K9 BCM, for an open-circuit/high resistance or short-circuit to earth. If the

circuits test normal, replace the K9 BCM.

8. If equipped, vehicle in Service Mode, verify that a test lamp illuminates between the accessory wake-up serial data 2 circuit terminal coming from K114B hybrid powertrain control module 2 and earth.
   If the test lamp does not illuminate, test the entire circuit, including the B+ circuit to the K114B hybrid powertrain control module 2, for an open-circuit/high resistance or short-circuit to earth. If the circuits test normal, replace the K114B hybrid powertrain control module 2.

   Note: Only the high-voltage energy management high-speed GMLAN modules have a high-voltage energy management communication enable circuit and the K114B hybrid power train control module 2 is the output for this circuit. Refer to the control module schematics to identify which control modules have this circuit.

9. If equipped, vehicle in Service Mode, verify that a test lamp illuminates between the high-voltage energy management communication enable circuit terminal coming from K114B hybrid powertrain control module 2 and earth.
   If the test lamp does not illuminate, test the entire circuit, including the B+ circuit to the K114B hybrid powertrain control module 2, for an open-circuit/high resistance or short-circuit to earth. If the circuits test normal, replace the K114B hybrid powertrain control module 2.
10. Vehicle OFF, all access doors closed, all vehicle systems OFF, and all keys at least 3 metres away from vehicle. It may take up to 2 minutes for all vehicle systems to power down. Test for less than 5 Ω between each serial data circuit terminal and the appropriate data link connector (DLC) terminal listed below:
    - X84 DLC low-speed GMLAN serial data circuit terminal 1
    - X84 DLC high-speed GMLAN serial data circuit terminal 6 or 14
    - X84 DLC mid-speed GMLAN serial data circuit terminal 3 or 11
    - X84 DLC chassis high-speed GMLAN serial data circuit terminal 12 or 13
    - X84B auxiliary data connector powertrain high-speed GMLAN serial data circuit terminal 12 or 13
    - X84B auxiliary data connector high-voltage energy high-speed GMLAN serial data circuit terminal 3 or 11

    If greater than the specified range, test the serial data circuit for an open-circuit/high resistance between the non communicating control module and the control module setting the DTC or a serial data splice pack.
11. If all circuits test normal, replace the control module that is not communicating.

High-Voltage Module Chart

Module	Voltage System	Data Link Type
K16 Battery Energy Control Module (BECM)	300 V 12 V	• High-Voltage Energy Management High-Speed GMLAN • High Speed GMLAN • BECM Dedicated Bus

Repair Instructions

Perform the Diagnostic Repair Verification after completing the diagnostic procedure.

- GMLAN Wiring Repairs
- Control Module References for control module replacement, programming and setup

&#169© Copyright Chevrolet. All rights reserved

DTC U0300-U0336

Diagnostic Instructions

- Perform the Diagnostic System Check - Vehicle prior to using this diagnostic procedure.
- Review Strategy Based Diagnosis for an overview of the diagnostic approach.
- Diagnostic Procedure Instructions provides an overview of each diagnostic category.

DTC Descriptors

DTC U0301 00: Software Incompatibility with Engine Control Module

DTC U0302 00: Software Incompatibility with Transmission Control Module

DTC U0315 00: Software Incompatibility with Electronic Brake Control Module

Circuit/System Description

Some control modules must be configured with specific software, serial numbers, vehicle options, or other information. If a control module was not properly configured after installation that module may set the appropriate U Code. No external circuit diagnosis is involved.

Conditions for Running the DTC

Battery voltage is between 9-16 V and data link communications operate normally.

Conditions for Setting the DTC

The control module is not configured properly.

Conditions for Clearing the DTC

- A current DTC clears when the malfunction is no longer present.

- A history DTC clears when the module ignition cycle counter reaches the reset threshold, without a repeat of the malfunction.

Reference Information

Schematic Reference

Data Communication Schematics

Connector End View Reference

Component Connector End Views

Description and Operation

Data Link Communications Description and Operation

Electrical Information Reference

- Circuit Testing
- Connector Repairs
- Testing for Intermittent Conditions and Poor Connections
- Wiring Repairs

Scan Tool References

Control Module References for scan tool information

Circuit/System Verification

Verify the appropriate DTC is not set.

If the DTC is set, program the control module specified by the DTC descriptor. If the DTC resets, replace the control module specified by the DTC descriptor.

Repair Instructions

Perform the Diagnostic Repair Verification after completing the diagnostic procedure.

Control Module References for control module replacement, setup, and programming

&#169© Copyright Chevrolet. All rights reserved

DTC U0400-U05FF

Diagnostic Instructions

- Perform the Diagnostic System Check - Vehicle prior to using this diagnostic procedure.
- Review Strategy Based Diagnosis for an overview of the diagnostic approach.
- Diagnostic Procedure Instructions provides an overview of each diagnostic category.

DTC Descriptor

Refer to Control Module U Code List .

Circuit/System Description

Some control modules are constantly receiving information from other control modules through serial data communication network. The invalid data code will be set when a receiving control module detects a discrepancy in information it receives from another control module causing its integrity to be questioned. The symptom byte listed in the DTC Descriptor is for engineering reference only. No external circuit diagnosis is involved.

Conditions for Running the DTC

Battery voltage is between 9-16 V and data link communications operate normally.

Conditions for Setting the DTC

The control module is not configured properly.

Conditions for Clearing the DTC

- A current DTC clears when the malfunction is no longer present.
- A history DTC clears when the module ignition cycle counter reaches the reset threshold, without a repeat of the malfunction.

Reference Information

Schematic Reference

Data Communication Schematics

Connector End View Reference

Component Connector End Views

Description and Operation

Data Link Communications Description and Operation

Electrical Information Reference

- Circuit Testing
- Connector Repairs
- Testing for Intermittent Conditions and Poor Connections
- Wiring Repairs

Scan Tool References

Control Module References for scan tool information

Circuit/System Verification

1. Engine running for 10 seconds.
2. Vehicle in Service Mode, verify that DTC U0400-U05FF is not set.
   If the DTC U0400-U05FF is set along with other DTCs set, diagnose all other codes first. Refer to Diagnostic Trouble Code (DTC) List - Vehicle .
   If the DTC U0400-U05FF is set without other DTCs set, program the control module specified by the DTC descriptor. If the DTC resets, replace the appropriate control module.

Repair Instructions

Perform the Diagnostic Repair Verification after completing the diagnostic procedure.

Control Module References for control module replacement, setup, and programming

&#169© Copyright Chevrolet. All rights reserved

DTC U1500-U15BF

Diagnostic Instructions

- Perform the Diagnostic System Check - Vehicle prior to using this diagnostic procedure.
- Review Strategy Based Diagnosis for an overview of the diagnostic approach.
- Diagnostic Procedure Instructions provides an overview of each diagnostic category.

DTC Descriptor

Refer to Control Module U Code List .

Circuit/System Description

The serial data is transmitted over a Local Interconnect Network (LIN) single wire network circuit bus between a master control module and other control modules within a particular subsystem. If serial data communication is lost between any of the control modules on the LIN bus network, a no communication code against the non-communicating control module will be set. A master control module is the one that reports the non communication code. Note: a loss of serial data communications DTC does not represent a failure of the master control module that set it.

Diagnostic Aids

- A control module may have a U-code stored in history that does not require any repairs. Issues with late or corrupted messages between control modules can be temporary with no apparent symptom or complaint; this does not mean the control module is faulty. Do not replace a control module based only on a history U-code.
- Do not replace a control module reporting a U-code. The U-code identifies which control module needs to be diagnosed for a communication issue.
- Communication will be available between the master control module and the scan tool if there is a loss of communications with any of the other control modules on the LIN bus network.
- An open in the LIN bus serial data circuit between the splice pack and a control module will only affect that specific control module. This type of failure will set a loss of communication DTC for each control module affected and the other control modules will still communicate.
- Some intermittent communication concerns may be caused by fretting corrosion on the serial data circuit terminals. Inspect all connectors at the control module that set the communication DTC, the control module that the communication DTC was set against and any in-line harness connectors between the two control modules. Do not replace a control module based only on fretting corrosion. Refer to bulletin 09-06-03-004 for assistance with the diagnosis and repair of this condition.

Reference Information

Schematic Reference

Data Communication Schematics

Connector End View Reference

Component Connector End Views

Description and Operation

Data Link Communications Description and Operation

Electrical Information Reference

- Circuit Testing
- Connector Repairs
- Testing for Intermittent Conditions and Poor Connections
- Wiring Repairs

Circuit/System Testing

Note:

- Use the schematic to identify the following:
  - LIN devices the vehicle is equipped with
  - The LIN device's B+, ignition, earth and serial data circuit terminals
- Use the Control Module U Code list to determine which LIN device is not communicating with the master control module. Refer to Control Module U Code List .
- A loss of serial data communications DTC does not represent a failure of the master control module that set it.

1. Vehicle OFF, disconnect the harness connector at a LIN device that is not communicating.
2. Test for less than 10 Ω between each ground circuit terminal and ground.
   If greater than the specified range, test the ground circuit for an open/high resistance.
3. If equipped, vehicle in Service Mode, verify that a test lamp illuminates between each B+ circuit terminal and earth.
   If the test lamp does not illuminate, test the B+ circuit for a short to ground or an open/high resistance. If the circuit fuse is open, test the control circuits of the LIN device for a short to ground. If the circuits test normal, replace the LIN device.
4. If equipped, vehicle in Service Mode, verify that a test lamp illuminates between each ignition circuit terminal and earth.
   If the test lamp does not illuminate, test the ignition circuit for a short to ground or an open/high resistance. If the circuit fuse is open, test the control circuits of the LIN device for a short to ground. If the circuits test normal, replace the LIN device.

5. Vehicle in Service Mode, test for 2-12 V between the LIN serial data circuit and earth.
   If greater than the specified range, test the LIN serial data circuit for a short to voltage. If the circuit tests normal, replace the master control module.
   If less than the specified range, test the LIN serial data circuit for a short to ground or an open/high resistance. If the circuit tests normal, replace the master control module.
6. If all circuits test normal, replace the LIN device.

Repair Instructions

Perform the Diagnostic Repair Verification after completing the diagnostic procedure.

- GMLAN Wiring Repairs
- Control Module References for control module replacement, setup, and programming

&#169© Copyright Chevrolet. All rights reserved

DTC U1793

Diagnostic Instructions

- Perform the Diagnostic System Check - Vehicle prior to using this diagnostic procedure.
- Review Strategy Based Diagnosis for an overview of the diagnostic approach.
- Diagnostic Procedure Instructions provides an overview of each diagnostic category.

DTC Descriptor

DTC U1793 00: 14V Power Module Lost Communication with Hybrid Powertrain Control Module on Powertrain Expansion Communication Bus

Diagnostic Fault Information

Circuit	Short to Ground	Open/High Resistance	Short to Voltage	Signal Performance
B+	U1793*	U1793	--	--
Ignition	U1793*	U1793*	--	--
Accessory Wake-up Serial Data 2	P06E4, U1793*	U1793*	--	--
Powertrain High-Speed GMLAN Serial Data (+)	U0074*	U0074, U1793*	U0074*	-
Powertrain High-Speed GMLAN Serial Data (-)	U0074*	U0074, U1793*	U0074*	--
Ground	--	U1793*	--	--
* Other modules/DTCs may set with this fault.				

Circuit/System Description

Control modules connected to the serial data circuits monitor for serial data communications during normal vehicle operation. Operating information and commands are exchanged among the control modules. The control modules have prerecorded information about what messages are needed to be exchanged on the serial data circuits, for each virtual network. The messages are supervised and also, some periodic messages are used by the receiver module as an availability indication of the transmitter module. Each message contains the identification number of the transmitter module.

DTC U1793 will set when no communication is established between the 14 V power module and the hybrid powertrain control module 1 on the powertrain high-speed GMLAN

serial data bus.

Conditions for Running the DTC

- The system voltage is between 9–16 V.
- The vehicle power mode master requires serial data communication to occur from this specific control module.

Conditions for Setting the DTC

A supervised periodic message that includes the transmitter module availability has not been received.

Action Taken When the DTC Sets

The control module is never signalled. Therefore, the specific subsystems will not function.

Conditions for Clearing the DTC

- A current DTC clears when the malfunction is no longer present.
- A history DTC clears when the control module ignition cycle counter reaches the reset threshold of 50, without a repeat of the malfunction.

Diagnostic Aids

- Sometimes, while diagnosing a specific customer concern or after a repair, you may notice a history U-code present. However, there is no associated "current" or "active" status. Loss-of- communication U-codes such as these can set for a variety of reasons. Many times, they are transparent to the vehicle operator and technician, and/or have no associated symptoms. Eventually, they will erase themselves automatically after a number of fault-free ignition cycles. This condition would most likely be attributed to one of these scenarios:
  - A control module on the data communication circuit was disconnected while the communication circuit is awake.
  - Power to one or more control modules was interrupted during diagnosis.
  - A low battery condition was present, so some control modules stop communicating when battery voltage drops below a certain threshold.
  - Battery power was restored to the vehicle and control modules on the communication circuit did not all re-initialise at the same time.
  - If a loss-of-communication U-code appears in history for no apparent reason, it is most likely associated with one of the scenarios above. These are all temporary conditions and should never be interpreted as an intermittent fault, causing you to replace a part.
- A control module may have a U-code stored in history that does not require any repairs. Issues with late or corrupted messages between control modules can be temporary with no apparent symptom or complaint; this does not mean the control module is faulty. Do not replace a control module based only on a history U-code.
- Do not replace a control module reporting a U-code. The U-code identifies which control module needs to be diagnosed for a communication issue.
- Communication may be available between the control module and the scan tool with one or more GMLAN serial data systems inoperative. This condition is due to the control module using multiple GMLAN busses.
- Use Data Link References to determine what GMLAN serial data communications the non communicating control module uses.

- The control module may not have internal protection for specific control circuits and may open a B+ or ignition fuse. If a fuse is open and the B+ or ignition circuit is not shorted to earth, ensure none of the control circuits are shorted to earth before replacing the non communicating control module.

Reference Information

Schematic Reference

- Data Communication Schematics
- Control Module References

Connector End View Reference

Component Connector End Views

Description and Operation

Data Link Communications Description and Operation

Electrical Information Reference

- Circuit Testing
- Connector Repairs
- Testing for Intermittent Conditions and Poor Connections
- Wiring Repairs

Scan Tool Reference

Control Module References for scan tool information

Circuit/System Verification

1. Verify that DTC U0293 is not set.
   If the DTC is set, refer to DTC U0100-U02FF .
2. Verify that DTC U0074, P06E4, U1814, U2099, B1428, B1370, B1380, B1440, B1441, B1325, or P0562 is not set.
   If any of these DTCs is set, refer to Diagnostic Trouble Code (DTC) List - Vehicle .

Circuit/System Testing

Note: Use the schematic to identify the following:

- Control module location on the powertrain high-speed GMLAN serial data circuits
- The control module B+, ignition, earth, accessory wake-up serial data 2 and serial data circuit terminals

1. Vehicle OFF, disconnect the X1 and X2 harness connectors at the T6 power inverter module.
2. Test for less than 5 Ω between the T6 power inverter module case and earth.
   If greater than the specified value, test the earth strap for an open-circuit/high resistance.
3. If equipped, vehicle in Service Mode, verify that a test lamp illuminates between each B+ circuit terminal and earth.
   If the test lamp does not illuminate, test the B+ circuit for a short to ground or an open/high resistance. If the circuit fuse is open, test the control circuits of the T6 power inverter module for a short-circuit to earth. If the circuits test normal, replace the T6 power inverter module.
4. If equipped, vehicle in Service Mode, verify that a test lamp illuminates between each ignition circuit terminal and earth.
   If the test lamp does not illuminate, test the ignition circuit for a short to ground or an open/high resistance. If the circuit fuse is open, test the control circuits of the T6 power inverter module for a short-circuit to earth. If the circuits test normal, replace the T6 power inverter module.
5. If equipped, vehicle in Service Mode, verify that a test lamp illuminates between the accessory wake-up serial data 2 circuit terminal and earth.
   If the test lamp does not illuminate, test the entire circuit, including the B+ circuit to the K114B hybrid powertrain control module 2, for an open-circuit/high resistance or short-circuit to earth. If the circuits test normal, replace the K114B hybrid powertrain control module 2.
6. Vehicle OFF, disconnect the X2 harness connector at the K1 14V power module.
7. Vehicle OFF, and all vehicle systems OFF, all keys at least 3 metres away from vehicle, all access doors closed. It may take up to 2 minutes for all vehicle systems to power down. Test for less than 2 Ω in each powertrain high-speed GMLAN serial data circuit between the T6 power inverter module and the K1 14V power module.
   If greater than the specified range, test the serial data circuit for an open-circuit/high resistance between the T6 power inverter module and the K1 14V power module.
8. If all circuits test normal, replace the T6 power inverter module.

Repair Instructions

Perform the Diagnostic Repair Verification after completing the diagnostic procedure.

- GMLAN Wiring Repairs
- Control Module References for control module replacement, programming and setup

&#169© Copyright Chevrolet. All rights reserved

DTC U1795

Diagnostic Instructions

- Perform the Diagnostic System Check - Vehicle prior to using this diagnostic procedure.
- Review Strategy Based Diagnosis for an overview of the diagnostic approach.
- Diagnostic Procedure Instructions provides an overview of each diagnostic category.

DTC Descriptor

DTC U1795 00: 14V Power Module Powertrain Expansion Communication Bus Off

Circuit/System Description

The powertrain high-speed GMLAN serial data circuits are serial data buses used to communicate information between the control modules. The powertrain high-speed GMLAN serial data circuits also connect directly to the auxiliary data connector on passenger side. If this serial data system is inoperative, some control modules will still communicate with the scan tool due to other serial data systems but not with each other.

Conditions for Running the DTC

- Supply voltage to the control modules are in the normal operating range.
- The vehicle power mode requires serial data communications.

Conditions for Setting the DTC

The control module setting the DTC has attempted to establish communication on the powertrain high-speed GMLAN serial data circuits more than 3 times.

Action Taken When the DTC Sets

- The control module suspends all message transmission.
- The MIL and battery indicators will illuminate, along with several DIC messages.

Conditions for Clearing the DTC

- A current DTC clears when the malfunction is no longer present.
- A history DTC clears when the module ignition cycle counter reaches the reset threshold, without a repeat of the malfunction.

Circuit/System Verification

Verify that U0074 is not set.

If the DTC is set, refer to DTC U0074 .

&#169© Copyright Chevrolet. All rights reserved

DTC U179A

Diagnostic Instructions

- Perform the Diagnostic System Check - Vehicle prior to using this diagnostic procedure.
- Review Strategy Based Diagnosis for an overview of the diagnostic approach.
- Diagnostic Procedure Instructions provides an overview of each diagnostic category.

DTC Descriptor

DTC U179A 00: Lost Communication with Hybrid Powertrain Control Module 2

Diagnostic Fault Information

Circuit	Short to Ground	Open/High Resistance	Short to Voltage	Signal Performance
B+	U179A	U179A	--	--
Ignition	U179A	U179A	--	--
Accessory Wakeup Serial Data	U1814	U179A	--	--
Low Speed GMLAN Serial Data	1	U179A	1	--
High Speed GMLAN Serial Data (+)	2	U179A	2	--
High Speed GMLAN Serial Data (-)	2	U179A	2	--
Powertrain High-Speed GMLAN Serial Data (+)	U0074	U179A, U0074	U0074	-
Powertrain High-Speed GMLAN Serial Data (-)	U0074	U179A, U0074	U0074	-
High-Voltage Energy High Speed GMLAN Serial Data (+)	U007A	U179A, U007A	U007A	-
High-Voltage Energy High Speed GMLAN Serial Data (-)	U007A	U179A, U007A	U007A	--
Ground	--	U179A	--	--
1. Scan Tool Does Not Communicate With Low-Speed GMLAN Device 2. Scan Tool Does Not Communicate With High-Speed GMLAN Device				

Circuit/System Description

The serial data circuit is the means by which the control modules in the vehicle communicate with each other. Once the scan tool is connected to the serial data circuit through the data link connector (DLC), the scan tool can be used to monitor each control module for diagnostic purposes and to check for diagnostic trouble codes (DTCs). When the vehicle is on, each control module communicating on the serial data circuit sends a state of health (SOH) message to ensure that the control module is operating properly. When a control module stops communicating on the serial data circuit, for example if the control module loses power or ground, the SOH message it normally sends on the serial data circuit disappears. Other control modules on the serial data circuit, which expect to receive that SOH message, detect its absence; those control modules in turn set a DTC associated with the loss of SOH of the non communicating control module. A loss of serial data communications DTC does not represent a failure of the control modules that contain the stored code.

Conditions for Running the DTC

The system voltage is between 9–16 V.

Conditions for Setting the DTC

A supervised periodic message that includes the transmitter module availability has not been received.

Action Taken When the DTC Sets

DTC U179A is a type A DTC.

Conditions for Clearing the DTC

DTC U179A is a type A DTC.

Diagnostic Aids

- Sometimes, while diagnosing a specific customer concern or after a repair, you may notice a history U-code present. However, there is no associated "current" or "active" status. Loss-of- communication U-codes such as these can set for a variety of reasons. Many times, they are transparent to the vehicle operator and technician, and/or have no associated symptoms. Eventually, they will erase themselves automatically after a number of fault-free ignition cycles. This condition would most likely be attributed to one of these scenarios:
  - A control module on the data communication circuit was disconnected while the communication circuit is awake.
  - Power to one or more control modules was interrupted during diagnosis.
  - A low battery condition was present, so some control modules stop communicating when battery voltage drops below a certain threshold.
  - Battery power was restored to the vehicle and control modules on the communication circuit did not all re-initialise at the same time.
  - If a loss-of-communication U-code appears in history for no apparent reason, it is most likely associated with one of the scenarios above. These are all temporary conditions and should never be interpreted as an intermittent fault, causing you to replace a part.

- A control module may have a U-code stored in history that does not require any repairs. Issues with late or corrupted messages between control modules can be temporary with no apparent symptom or complaint; this does not mean the control module is faulty. Do not replace a control module based only on a history U-code.
- Do not replace a control module reporting a U-code. The U-code identifies which control module needs to be diagnosed for a communication issue.
- Communication may be available between the control module and the scan tool with one or more GMLAN serial data systems inoperative. This condition is due to the control module using multiple GMLAN busses.
- Use Data Link References to determine what GMLAN serial data communications the non communicating control module uses.
- The control module may not have internal protection for specific control circuits and may open a B+ or ignition fuse. If a fuse is open and the B+ or ignition circuit is not shorted to earth, ensure none of the control circuits are shorted to earth before replacing the non communicating control module.

Reference Information

Schematic Reference

- Data Communication Schematics
- Control Module References

Connector End View Reference

Component Connector End Views

Description and Operation

Data Link Communications Description and Operation

Electrical Information Reference

- Circuit Testing
- Connector Repairs
- Testing for Intermittent Conditions and Poor Connections
- Wiring Repairs

Scan Tool Reference

Control Module References for scan tool information

Circuit/System Verification

Verify that DTC U0073, U0074, U0078, U007A, U1814, U2099, B1428, B1370, B1380, B1440, B1441, B1325 or P0562 is not set.

If any of the DTCs are set, refer to Diagnostic Trouble Code (DTC) List - Vehicle .

Circuit/System Testing

Note: Use the schematic to identify the following:

- The hybrid powertrain control module 2 locations on each GMLAN serial data busses
- The hybrid powertrain control module 2 B+, ignition, earth, accessory wake-up serial data and serial data circuit terminals

1. Vehicle OFF, disconnect the harness connector at the K114B hybrid powertrain control module 2.
2. Test for less than 10 Ω between each ground circuit terminal and ground.
   If greater than the specified range, test the ground circuit for an open/high resistance.
3. If equipped, vehicle in Service Mode, verify that a test lamp illuminates between each B+ circuit terminal and earth.
   If the test lamp does not illuminate, test the B+ circuit for a short to ground or an open/high resistance. If the circuit fuse is open, test the control circuits of the K114B hybrid powertrain control module 2 for a short-circuit to earth. If the circuits test normal, replace the K114B hybrid powertrain control module 2.
4. If equipped, vehicle in Service Mode, verify that a test lamp illuminates between each ignition circuit terminal and earth.
   If the test lamp does not illuminate, test the ignition circuit for a short to ground or an open/high resistance. If the circuit fuse is open, test the control circuits of the K114B hybrid powertrain control module 2 for a short-circuit to earth. If the circuits test normal, replace the K114B hybrid powertrain control module 2.
5. If equipped, vehicle in Service Mode, verify that a test lamp illuminates between the accessory wake-up serial data circuit terminal and earth.
   If the test lamp does not illuminate, test the entire circuit, including the B+ circuit to the K9 BCM, for an open-circuit/high resistance or short-circuit to earth. If the circuits test normal, replace the K9 BCM.
6. Vehicle OFF, disconnect the harness connectors at the control module setting the DTC.
7. Vehicle OFF, and all vehicle systems OFF, all keys at least 3 metres away from vehicle, all access doors closed. It may take up to 2 minutes for all vehicle systems to power down. Test for less than 2 Ω in each serial data circuit between the K114B hybrid powertrain control module 2 and the control module setting the DTC.
   If greater than the specified range, test the serial data circuit for an open-circuit/high resistance between the K114B hybrid powertrain control module 2 and the control module setting the DTC.
8. If all circuits test normal, replace the K114B hybrid powertrain control module 2.

Repair Instructions

Perform the Diagnostic Repair Verification after completing the diagnostic procedure.

- GMLAN Wiring Repairs
- Control Module References for control module replacement, programming and setup

&#169© Copyright Chevrolet. All rights reserved

DTC U1803

Diagnostic Instructions

- Perform the Diagnostic System Check - Vehicle prior to using this diagnostic procedure.
- Review Strategy Based Diagnosis for an overview of the diagnostic approach.
- Diagnostic Procedure Instructions provides an overview of each diagnostic category.

DTC Descriptor

DTC U1803 00: Lost Communication with Hybrid Powertrain Control Module 2

Diagnostic Fault Information

Circuit	Short to Ground	Open/High Resistance	Short to Voltage	Signal Performance
B+	U1803	U1803	--	--
Ignition	U1803	U1803	--	--
Accessory Wakeup Serial Data	U1814	U1803	--	--
Low Speed GMLAN Serial Data	1	U1803	1	--
High Speed GMLAN Serial Data (+)	2	U1803	2	--
High Speed GMLAN Serial Data (-)	2	U1803	2	--
Powertrain High-Speed GMLAN Serial Data (+)	U0074	U1803, U0074	U0074	-
Powertrain High-Speed GMLAN Serial Data (-)	U0074	U1803, U0074	U0074	-
High-Voltage Energy High Speed GMLAN Serial Data (+)	U007A	U1803, U007A	U007A	-
High-Voltage Energy High Speed GMLAN Serial Data (-)	U007A	U1803, U007A	U007A	--
Ground	--	U1803	--	--
1. Scan Tool Does Not Communicate With Low-Speed GMLAN Device 2. Scan Tool Does Not Communicate With High-Speed GMLAN Device				

Circuit/System Description

The serial data circuit is the means by which the control modules in the vehicle communicate with each other. Once the scan tool is connected to the serial data circuit through the data link connector (DLC), the scan tool can be used to monitor each control module for diagnostic purposes and to check for diagnostic trouble codes (DTCs). When the vehicle is ON, each control module communicating on the serial data circuit sends a state of health (SOH) message to ensure that the control module is operating properly. When a control module stops communicating on the serial data circuit, for example if the control module loses power or ground, the SOH message it normally sends on the serial data circuit disappears. Other control modules on the serial data circuit, which expect to receive that SOH message, detect its absence; those control modules in turn set a DTC associated with the loss of SOH of the non communicating control module. A loss of serial data communications DTC does not represent a failure of the control modules that contain the stored code.

Conditions for Running the DTC

The system voltage is between 9–16 V.

Conditions for Setting the DTC

A supervised periodic message that includes the transmitter module availability has not been received.

Action Taken When the DTC Sets

The control module is never signalled. Therefore, the specific subsystems will not function.

Conditions for Clearing the DTC

- A current DTC clears when the malfunction is no longer present.
- A history DTC clears when the module ignition cycle counter reaches the reset threshold of 50, without a repeat of the malfunction.

Diagnostic Aids

- Sometimes, while diagnosing a specific customer concern or after a repair, you may notice a history U-code present. However, there is no associated "current" or "active" status. Loss-of- communication U-codes such as these can set for a variety of reasons. Many times, they are transparent to the vehicle operator and technician, and/or have no associated symptoms. Eventually, they will erase themselves automatically after a number of fault-free ignition cycles. This condition would most likely be attributed to one of these scenarios:
  - A control module on the data communication circuit was disconnected while the communication circuit is awake.
  - Power to one or more control modules was interrupted during diagnosis.
  - A low battery condition was present, so some control modules stop communicating when battery voltage drops below a certain threshold.
  - Battery power was restored to the vehicle and control modules on the communication circuit did not all re-initialise at the same time.
  - If a loss-of-communication U-code appears in history for no apparent reason, it is most likely associated with one of the scenarios above. These are all temporary

conditions and should never be interpreted as an intermittent fault, causing you to replace a part.

- A control module may have a U-code stored in history that does not require any repairs. Issues with late or corrupted messages between control modules can be temporary with no apparent symptom or complaint; this does not mean the control module is faulty. Do not replace a control module based only on a history U-code.
- Do not replace a control module reporting a U-code. The U-code identifies which control module needs to be diagnosed for a communication issue.
- Communication may be available between the control module and the scan tool with one or more GMLAN serial data systems inoperative. This condition is due to the control module using multiple GMLAN busses.
- Use Data Link References to determine what GMLAN serial data communications the non communicating control module uses.
- The control module may not have internal protection for specific control circuits and may open a B+ or ignition fuse. If a fuse is open and the B+ or ignition circuit is not shorted to earth, ensure none of the control circuits are shorted to earth before replacing the non communicating control module.

Reference Information

Schematic Reference

- Data Communication Schematics
- Control Module References

Connector End View Reference

Component Connector End Views

Description and Operation

Data Link Communications Description and Operation

Electrical Information Reference

- Circuit Testing
- Connector Repairs
- Testing for Intermittent Conditions and Poor Connections
- Wiring Repairs

Scan Tool Reference

Control Module References for scan tool information

Circuit/System Verification

Verify that DTC U0073, U0074, U0078, U007A, U1814, U2099, B1428, B1370, B1380, B1440, B1441, B1325 or P0562 is not set.

If any of the DTCs are set, refer to Diagnostic Trouble Code (DTC) List - Vehicle .

Circuit/System Testing

Note: Use the schematic to identify the following:

- The hybrid powertrain control module 2 locations on each GMLAN serial data busses
- The hybrid powertrain control module 2 B+, ignition, earth, accessory wake-up serial data and serial data circuit terminals

1. Vehicle OFF, disconnect the harness connector at the K114B hybrid powertrain control module 2.
2. Test for less than 10 Ω between each ground circuit terminal and ground.
   If greater than the specified range, test the ground circuit for an open/high resistance.
3. If equipped, vehicle in Service Mode, verify that a test lamp illuminates between each B+ circuit terminal and earth.
   If the test lamp does not illuminate, test the B+ circuit for a short to ground or an open/high resistance. If the circuit fuse is open, test the control circuits of the K114B hybrid powertrain control module 2 for a short-circuit to earth. If the circuits test normal, replace the K114B hybrid powertrain control module 2.
4. If equipped, vehicle in Service Mode, verify that a test lamp illuminates between each ignition circuit terminal and earth.
   If the test lamp does not illuminate, test the ignition circuit for a short to ground or an open/high resistance. If the circuit fuse is open, test the control circuits of the K114B hybrid powertrain control module 2 for a short-circuit to earth. If the circuits test normal, replace the K114B hybrid powertrain control module 2.
5. If equipped, vehicle in Service Mode, verify that a test lamp illuminates between the accessory wake-up serial data circuit terminal and earth.
   If the test lamp does not illuminate, test the entire circuit, including the B+ circuit to the K9 body control module (BCM), for an open/high resistance or short to ground. If the circuits test normal, replace the K9 BCM.
6. Vehicle OFF, disconnect the harness connectors at the control module setting the DTC.
7. Vehicle OFF, and all vehicle systems OFF, all keys at least 3 metres away from vehicle, all access doors closed. It may take up to 2 minutes for all vehicle systems to power down. Test for less than 2 Ω in each serial data circuit between the K114B hybrid powertrain control module 2 and the control module setting the DTC.
   If greater than the specified range, test the serial data circuit for an open-circuit/high resistance between the K114B hybrid powertrain control module 2 and the control module setting the DTC.
8. If all circuits test normal, replace the K114B hybrid powertrain control module 2.

Repair Instructions

Perform the Diagnostic Repair Verification after completing the diagnostic procedure.

- GMLAN Wiring Repairs
- Control Module References for control module replacement, programming and setup

&#169© Copyright Chevrolet. All rights reserved

DTC U1806

Diagnostic Instructions

- Perform the Diagnostic System Check - Vehicle prior to using this diagnostic procedure.
- Review Strategy Based Diagnosis for an overview of the diagnostic approach.
- Diagnostic Procedure Instructions provides an overview of each diagnostic category.

DTC Descriptor

DTC U1806 00: Battery Energy Control Module High Voltage Energy Management Communication Bus Off

Circuit/System Description

The high-voltage energy management high-speed GMLAN serial data circuits are serial data buses used to communicate information between the hybrid powertrain control module 2, the battery energy control module and the battery charger. If this serial data system is inoperative the control modules will not communicate with each other on this bus, but they still communicate with the scan tool through the high-speed GMLAN bus.

The scan tool does not communicate with control modules through the high-voltage energy management high-speed GMLAN bus. The high-voltage energy high-speed GMLAN serial data circuits connect directly to the auxiliary data connector and do not connect with the scan tool.

Conditions for Running the DTC

- Vehicle ON.
- The system voltage is at least 9 V.

Conditions for Setting the DTC

The control module setting the DTC has attempted to establish communications on the serial data circuits for more than 1.4 seconds without success.

Action Taken When the DTC Sets

The DTC U1806 is a type B DTC.

Conditions for Clearing the DTC

The DTC U1806 is a type B DTC.

Circuit/System Verification

Verify that U007A is not set.

If the DTC is set, refer to DTC U007A .

&#169© Copyright Chevrolet. All rights reserved

DTC U1807

Diagnostic Instructions

- Perform the Diagnostic System Check - Vehicle prior to using this diagnostic procedure.
- Review Strategy Based Diagnosis for an overview of the diagnostic approach.
- Diagnostic Procedure Instructions provides an overview of each diagnostic category.

DTC Descriptor

DTC U1807 00: Battery Charger Control Module High-Voltage Energy Communication Bus Off

Circuit/System Description

The high-voltage energy management high-speed GMLAN serial data circuits are serial data buses used to communicate information between the control modules. The high-voltage energy high-speed GMLAN serial data circuits also connect directly to the auxiliary data connector. If this serial data system is inoperative the control modules will still communicate with the scan tool due to other serial data systems but not with each other.

Conditions for Running the DTC

- Supply voltage to the control modules are in the normal operating range.
- The vehicle power mode requires serial data communications.

Conditions for Setting the DTC

The control module setting the DTC has attempted to establish communication on the powertrain high-speed GMLAN serial data circuits more than 3 times.

Action Taken When the DTC Sets

DTC U1807 is a type A DTC.

Conditions for Clearing the DTC

DTC U1807 is a type A DTC.

Circuit/System Verification

Verify that U007A is not set.

If the DTC is set, refer to DTC U007A .

&#169© Copyright Chevrolet. All rights reserved

DTC U180A

Diagnostic Instructions

- Perform the Diagnostic System Check - Vehicle prior to using this diagnostic procedure.
- Review Strategy Based Diagnosis for an overview of the diagnostic approach.
- Diagnostic Procedure Instructions provides an overview of each diagnostic category.

DTC Descriptor

DTC U180A 00: Electric A/C Compressor Control Module High-Speed Communication Bus Off

Circuit/System Description

The high-speed GMLAN serial data circuits are serial data buses used to communicate information between the control modules. The high-speed GMLAN serial data circuits also connect directly to the data link connector (DLC) for programming purposes.

Conditions for Running the DTC

- The system voltage is greater than 10.25 V.
- The vehicle power mode requires serial data communications.

Conditions for Setting the DTC

The control module setting the DTC has attempted to establish communication on the high-speed GMLAN serial data circuits more than 3 times.

Action Taken When the DTC Sets

DTC U180A is a type B DTC.

Conditions for Clearing the DTC

DTC U180A is a type B DTC.

Circuit/System Verification

Diagnosis is accomplished using the symptom Scan Tool Does Not Communicate with High Speed GMLAN Device .

&#169© Copyright Chevrolet. All rights reserved

DTC U180B

Diagnostic Instructions

- Perform the Diagnostic System Check - Vehicle prior to using this diagnostic procedure.
- Review Strategy Based Diagnosis for an overview of the diagnostic approach.
- Diagnostic Procedure Instructions provides an overview of each diagnostic category.

DTC Descriptor

DTC U180B 00: Battery Energy Control Module High-Speed GMLAN Communication Bus Off

Circuit/System Description

The high-speed GMLAN serial data circuits are serial data buses used to communicate information between the control modules. The high-speed GMLAN serial data circuits connect directly to the data link connector (DLC) for programming purposes.

This diagnostic is used to check the high-speed GMLAN communication bus status.

Conditions for Running the DTC

- Vehicle ON.
- The system voltage is at least 9 V.

Conditions for Setting the DTC

The control module setting the DTC has attempted to establish communications on the serial data circuits for more than 1.4 seconds without success.

Action Taken When the DTC Sets

The DTC U180B is a type B DTC.

Conditions for Clearing the DTC

The DTC U180B is a type B DTC.

Circuit/System Verification

Diagnosis is accomplished using the symptom. Refer to Scan Tool Does Not Communicate with High Speed GMLAN Device .

&#169© Copyright Chevrolet. All rights reserved

DTC U180C

Diagnostic Instructions

- Perform the Diagnostic System Check - Vehicle prior to using this diagnostic procedure.
- Review Strategy Based Diagnosis for an overview of the diagnostic approach.
- Diagnostic Procedure Instructions provides an overview of each diagnostic category.

DTC Descriptor

DTC U180C 00: Battery Charger Control Module High-Speed GMLAN Communication Bus Off

Circuit/System Description

The high-speed GMLAN serial data circuits are serial data buses used to communicate information between the control modules. The high-speed GMLAN serial data circuits also connect directly to the data link connector (DLC) for programming purposes.

Conditions for Running the DTC

- Supply voltage to the control modules are in the normal operating range.
- The vehicle power mode requires serial data communications.

Conditions for Setting the DTC

The control module setting the DTC has attempted to establish communication on the high-speed GMLAN serial data circuits more than 3 times.

Action Taken When the DTC Sets

DTC U180C is a type B DTC.

Conditions for Clearing the DTC

DTC U180C is a type B DTC.

Circuit/System Verification

Diagnosis is accomplished using the symptom. Refer to Scan Tool Does Not Communicate with High Speed GMLAN Device .

&#169© Copyright Chevrolet. All rights reserved

DTC U180D

Diagnostic Instructions

- Perform the Diagnostic System Check - Vehicle prior to using this diagnostic procedure.
- Review Strategy Based Diagnosis for an overview of the diagnostic approach.
- Diagnostic Procedure Instructions provides an overview of each diagnostic category.

DTC Descriptor

DTC U180D 00: Electronic Brake Control Module Chassis Expansion Communication Bus Off

Circuit/System Description

The chassis high-speed GMLAN serial data circuits are serial data buses used to communicate information between the control modules. The chassis high-speed GMLAN serial data circuits also connect directly to the data link connector (DLC) for programming purposes. If this serial data system is inoperative, the control modules will still communicate with the scan tool due to other serial data systems but not with each other.

Conditions for Running the DTC

- Supply voltage to the control modules are in the normal operating range.
- The vehicle power mode requires serial data communications.

Conditions for Setting the DTC

The control module setting the DTC has attempted to establish communication on the high-speed GMLAN serial data circuits more than 3 times.

Action Taken When the DTC Sets

- The control module suspends all message transmission.
- The control module uses default values for all parameters received on the serial data circuits.
- The control module inhibits the setting of all other communication DTCs.

Conditions for Clearing the DTC

- A current DTC clears when the malfunction is no longer present.
- A history DTC clears when the module ignition cycle counter reaches the reset threshold, without a repeat of the malfunction.

Circuit/System Verification

Verify that U0077 is not set.

If the DTC is set, refer to DTC U0077 .

&#169© Copyright Chevrolet. All rights reserved

DTC U1814

Diagnostic Instructions

- Perform the Diagnostic System Check - Vehicle prior to using this diagnostic procedure.
- Review Strategy Based Diagnosis for an overview of the diagnostic approach.
- Diagnostic Procedure Instructions provides an overview of each diagnostic category.

DTC Descriptor

DTC U1814 00: Accessory Wake-up Serial Data Circuit

DTC U1814 01: Accessory Wake-up Serial Data Circuit Short-Circuit to Battery

DTC U1814 02: Accessory Wake-up Serial Data Circuit Short-Circuit to Earth

DTC U1814 04: Accessory Wake-up Serial Data Circuit Open

DTC U1814 5A: Accessory Wake-up Serial Data Circuit Not Plausible

Diagnostic Fault Information

Circuit	Short to Ground	Open/High Resistance	Short to Voltage	Signal Performance
Accessory Wakeup Serial Data	U1814	U0100-U02FF	--	--

Circuit/System Description

The body control module (BCM) activates the accessory wake-up serial data circuit when the vehicle is on. The accessory wake-up serial data circuit wakes up the hybrid powertrain control module 2 for serial data bus communication.

Conditions for Running the DTC

- The system voltage is between 9-16 volts.
- The vehicle power mode master requires serial data communication to occur.

Conditions for Setting the DTC

The BCM senses a short to ground on the accessory wakeup serial data circuit.

Action Taken When the DTC Sets

- The output command is turned off while the malfunction is present.
- The control modules use a default value for the missing parameters until the next ignition cycle.
- The control module(s) is never signalled, therefore the specific subsystem(s) will not function.
- The vehicle will not start while the circuit is shorted to ground.

Conditions for Clearing the DTC

- A current DTC clears when the malfunction is no longer present.
- A history DTC clears when the control module ignition cycle counter reaches the reset threshold of 50, without a repeat of the malfunction.

Diagnostic Aids

- Use the DMM MIN/MAX function to capture/locate intermittent conditions.
- Short to ground will also set multiple history no communication codes for GMLAN high speed modules.

Reference Information

Schematic Reference

Data Communication Schematics

Connector End View Reference

Component Connector End Views

Description and Operation

Data Link Communications Description and Operation

Electrical Information Reference

- Circuit Testing
- Connector Repairs
- Testing for Intermittent Conditions and Poor Connections
- Wiring Repairs

Circuit/System Testing

Note: Use the schematic to determine which control modules are on the BCM accessory wake-up serial data circuit 22, X4.

1. Vehicle OFF, disconnect the harness connector at the most easily accessible control module on the K9 BCM accessory wake-up serial data circuit.
2. Vehicle in Service Mode, retest for current DTCs. DTC U1814 should remain current.
   If the DTC becomes history, replace the control module that was just disconnected.
3. With the prior control modules disconnected, repeat steps 1 and 2 for each control module on the circuit except the K9 BCM.
4. Vehicle OFF, disconnect the X4 harness connector at the K9 BCM.
5. Test for infinite resistance between the accessory wake-up serial data circuit terminal 22 X4 and earth.
   If less than infinite resistance, repair the accessory wake-up serial data circuit for a short-circuit to earth.
6. If all circuits tests normal, replace the K9 BCM.

Repair Instructions

Perform the Diagnostic Repair Verification after completing the diagnostic procedure.

Control Module References for module replacement, setup, and programming

&#169© Copyright Chevrolet. All rights reserved

DTC U1817

Diagnostic Instructions

- Perform the Diagnostic System Check - Vehicle prior to using this diagnostic procedure.
- Review Strategy Based Diagnosis for an overview of the diagnostic approach.
- Diagnostic Procedure Instructions provides an overview of each diagnostic category.

DTC Descriptor

DTC U1817 00: Lost Communication with Hybrid Powertrain Control Module on Powertrain Expansion Communication Bus

Diagnostic Fault Information

Circuit	Short to Ground	Open/High Resistance	Short to Voltage	Signal Performance
B+	U1817	U1817	--	--
Ignition	U1817	U1817	--	--
Accessory Wake Up Serial Data 2	P06E4, U1817*	U1817*	--	--
Powertrain High-Speed GMLAN Serial Data (+)	U0074*	U0074, U1817*	U0074*	-
Powertrain High-Speed GMLAN Serial Data (-)	U0074*	U0074, U1817*	U0074*	--
Ground	--	U1817*	--	--
* Other DTCs may set with this fault.				

Circuit/System Description

Control modules connected to the powertrain high-speed GMLAN serial data circuits monitor for serial data communications during normal vehicle operation. Operating information and commands are exchanged among the control modules. The control modules have prerecorded information about what messages are needed to be exchanged on the serial data circuits, for each virtual network. The messages are supervised and also, some periodic messages are used by the receiver module as an availability indication of the transmitter module. Each message contains the identification number of the transmitter module.

The motor control modules and the hybrid powertrain control module 1 are all internal to the power inverter module. All circuits to the hybrid powertrain control module 1 are

also internal to the power inverter module and replaced as a single component.

Communication diagnostics for the serial data, including control module power and earth, as well as the wake-up circuits for motor control modules and the hybrid powertrain control module 1, are all diagnosed from external sources only to the power inverter module connector because any circuit fault condition within the power inverter module will cause a complete replacement.

Conditions for Running the DTC

- The system voltage is more than 10 V.
- The vehicle power mode master requires serial data communication to occur from this specific module.

Conditions for Setting the DTC

A supervised periodic message that includes the transmitter module availability has not been received.

Action Taken When the DTC Sets

DTC U1817 is a type A DTC.

Conditions for Clearing the DTC

DTC U1817 is a type A DTC.

Diagnostic Aids

- Sometimes, while diagnosing a specific customer concern or after a repair, you may notice a history U-code present. However, there is no associated "current" or "active" status. Loss-of- communication U-codes such as these can set for a variety of reasons. Many times, they are transparent to the vehicle operator and technician, and/or have no associated symptoms. Eventually, they will erase themselves automatically after a number of fault-free ignition cycles. This condition would most likely be attributed to one of these scenarios:
  - A control module on the data communication circuit was disconnected while the communication circuit is awake.
  - Power to one or more control modules was interrupted during diagnosis.
  - A low battery condition was present, so some control modules stop communicating when battery voltage drops below a certain threshold.
  - Battery power was restored to the vehicle and control modules on the communication circuit did not all re-initialise at the same time.
  - If a loss-of-communication U-code appears in history for no apparent reason, it is most likely associated with one of the scenarios above. These are all temporary conditions and should never be interpreted as an intermittent fault, causing you to replace a part.
- A control module may have a U-code stored in history that does not require any repairs. Issues with late or corrupted messages between control modules can be temporary with no apparent symptom or complaint; this does not mean the control module is faulty. Do not replace a control module based only on a history U-code.
- Do not replace a control module reporting a U-code. The U-code identifies which control module needs to be diagnosed for a communication issue.

- Communication may be available between the control module and the scan tool with one or more GMLAN serial data systems inoperative. This condition is due to the control module using multiple GMLAN busses.
- Use Data Link References to determine what GMLAN serial data communications the non communicating control module uses.
- The control module may not have internal protection for specific control circuits and may open a B+ or ignition fuse. If a fuse is open and the B+ or ignition circuit is not shorted to earth, ensure none of the control circuits are shorted to earth before replacing the non communicating control module.

Reference Information

Schematic Reference

- Data Communication Schematics
- Control Module References

Connector End View Reference

Component Connector End Views

Description and Operation

Data Link Communications Description and Operation

Electrical Information Reference

- Circuit Testing
- Connector Repairs
- Testing for Intermittent Conditions and Poor Connections
- Wiring Repairs

Scan Tool Reference

Control Module References for scan tool information

Circuit/System Verification

1. Verify that DTC U0293 is not set.
   If the DTC is set, refer to DTC U0100-U02FF .
2. Verify that DTC U0074, P06E4, B1428, B1370, B1380, B1440, B1441, B1325, or P0562 is not set.
   If any of the DTCs are set, refer to Diagnostic Trouble Code (DTC) List - Vehicle .

3. Verify that DTCs U1818, U1821 and U182D are not set.
   If all the DTCs are set, refer to DTC U0074 .

Circuit/System Testing

Note: Use the schematic to identify the following:
- Control module location on the powertrain high-speed GMLAN serial data circuits
- Control module B+, ignition, earth, accessory wake-up serial data 2 and serial data circuit terminals.

1. Vehicle OFF, disconnect the X1 and X2 harness connectors at the T6 power inverter module.
2. Test for less than 5 Ω between the T6 power inverter module case and earth.
   If greater than the specified range, test the earth strap for an open-circuit/high resistance.
3. If equipped, vehicle in Service Mode, verify that a test lamp illuminates between each B+ circuit terminal and earth.
   If the test lamp does not illuminate, test the B+ circuit for a short to ground or an open/high resistance. If the circuit fuse is open, test the control circuits of the T6 power inverter module for a short-circuit to earth. If the circuits test normal, replace the T6 power inverter module.
4. If equipped, vehicle in Service Mode, verify that a test lamp illuminates between each ignition circuit terminal and earth.
   If the test lamp does not illuminate, test the ignition circuit for a short to ground or an open/high resistance. If the circuit fuse is open, test the control circuits of the T6 power inverter module for a short-circuit to earth. If the circuits test normal, replace the T6 power inverter module.
5. If equipped, vehicle in Service Mode, verify that a test lamp illuminates between the accessory wake-up serial data 2 circuit terminal and earth.
   If the test lamp does not illuminate, test the entire circuit, including the B+ circuit to the K114B hybrid powertrain control module 2, for an open-circuit/high resistance or short-circuit to earth. If the circuits test normal, replace the K114B hybrid powertrain control module 2.
6. Vehicle OFF, disconnect the harness connector at the control module setting the DTC.
7. Vehicle OFF, and all vehicle systems OFF, all keys at least 3 metres away from vehicle, all access doors closed. It may take up to 2 minutes for all vehicle systems to power down. Test for less than 2 Ω in each powertrain high-speed GMLAN serial data circuit between the T6 power inverter module and the control module setting the DTC.
   If greater than the specified range, test the serial data circuit for an open-circuit/high resistance between the T6 power inverter module and the control module setting the DTC.
8. If all circuits test normal, replace the T6 power inverter module.

Repair Instructions

Perform the Diagnostic Repair Verification after completing the diagnostic procedure.

- GMLAN Wiring Repairs
- Control Module References for control module replacement, programming and setup

&#169© Copyright Chevrolet. All rights reserved

DTC U1818

Diagnostic Instructions

- Perform the Diagnostic System Check - Vehicle prior to using this diagnostic procedure.
- Review Strategy Based Diagnosis for an overview of the diagnostic approach.
- Diagnostic Procedure Instructions provides an overview of each diagnostic category.

DTC Descriptor

DTC U1818 00: Lost Communication with Engine Control Module on Powertrain Expansion Communication Bus

Diagnostic Fault Information

Circuit	Short to Ground	Open/High Resistance	Short to Voltage	Signal Performance
B+	U1818	U1818	--	--
Ignition	U1818	U1818	--	--
Accessory Wake Up Serial Data 2	P06E4*	U1818	--	--
Powertrain High-Speed GMLAN Serial Data (+)	U0074*	U1818*	U0074*	-
Powertrain High-Speed GMLAN Serial Data (-)	U0074*	U1818*	U0074*	--
Ground	--	U1818	--	--
* Other DTCs may set with this fault.				

Circuit/System Description

Control modules connected to the serial data circuits monitor for serial data communications during normal vehicle operation. Operating information and commands are exchanged among the control modules. The control modules have prerecorded information about what messages are needed to be exchanged on the serial data circuits, for each virtual network. The messages are supervised and also, some periodic messages are used by the receiver module as an availability indication of the transmitter module. Each message contains the identification number of the transmitter module.

Conditions for Running the DTC

- The system voltage is at least 10 V.
- The vehicle power mode master requires serial data communication to occur from this specific module.

Conditions for Setting the DTC

A supervised periodic message that includes the transmitter module availability has not been received.

Action Taken When the DTC Sets

DTC U1818 is a type A DTC.

Conditions for Clearing the DTC

DTC U1818 is a type A DTC.

Diagnostic Aids

- Sometimes, while diagnosing a specific customer concern or after a repair, you may notice a history U-code present. However, there is no associated "current" or "active" status. Loss-of- communication U-codes such as these can set for a variety of reasons. Many times, they are transparent to the vehicle operator and technician, and/or have no associated symptoms. Eventually, they will erase themselves automatically after a number of fault-free ignition cycles. This condition would most likely be attributed to one of these scenarios:
  - A control module on the data communication circuit was disconnected while the communication circuit is awake.
  - Power to one or more control modules was interrupted during diagnosis.
  - A low battery condition was present, so some control modules stop communicating when battery voltage drops below a certain threshold.
  - Battery power was restored to the vehicle and control modules on the communication circuit did not all re-initialise at the same time.
  - If a loss-of-communication U-code appears in history for no apparent reason, it is most likely associated with one of the scenarios above. These are all temporary conditions and should never be interpreted as an intermittent fault, causing you to replace a part.
- A control module may have a U-code stored in history that does not require any repairs. Issues with late or corrupted messages between control modules can be temporary with no apparent symptom or complaint; this does not mean the control module is faulty. Do not replace a control module based only on a history U-code.
- Do not replace a control module reporting a U-code. The U-code identifies which control module needs to be diagnosed for a communication issue.
- Communication may be available between the control module and the scan tool with one or more GMLAN serial data systems inoperative. This condition is due to the control module using multiple GMLAN busses.
- Use Data Link References to determine what GMLAN serial data communications the non communicating control module uses.
- The control module may not have internal protection for specific control circuits and may open a B+ or ignition fuse. If a fuse is open and the B+ or ignition circuit is not shorted to earth, ensure none of the control circuits are shorted to earth before replacing the non communicating control module.

Reference Information

Schematic Reference

- Data Communication Schematics
- Control Module References

Connector End View Reference

Component Connector End Views

Description and Operation

Data Link Communications Description and Operation

Electrical Information Reference

- Circuit Testing
- Connector Repairs
- Testing for Intermittent Conditions and Poor Connections
- Wiring Repairs

Scan Tool Reference

Control Module References for scan tool information

Circuit/System Verification

1. Verify that DTC U0100 is not set.
   If the DTC is set, refer to DTC U0100-U02FF .
2. Verify that DTC U0074, P06E4, B1428, B1370, B1380, B1440, B1441, B1325, or P0562 is not set.
   If any of the DTCs are set, refer to Diagnostic Trouble Code (DTC) List - Vehicle .
3. Verify that DTCs U1817, U1821 and U182D are not set.
   If all the DTCs are set, refer to DTC U0074 .

Circuit/System Testing

Note: Use the schematic to identify the following:

- The control module location on the powertrain high-speed GMLAN serial data circuits
- The control module B+, ignition, earth, accessory wake-up serial data 2 and serial data circuit terminals

1. Vehicle OFF, disconnect harness connector at the K20 engine control module (ECM).
2. Test for less than 10 Ω between each ground circuit terminal and ground.
   If greater than the specified range, test the ground circuit for an open/high resistance.
3. If equipped, vehicle in Service Mode, verify that a test lamp illuminates between each B+ circuit terminal and earth.
   If the test lamp does not illuminate, test the B+ circuit for a short to ground or an open/high resistance. If the circuit fuse is open, test the control circuits of the K20 ECM for a short-circuit to earth. If the circuits test normal, replace the K20 ECM.
4. If equipped, vehicle in Service Mode, verify that a test lamp illuminates between each ignition circuit terminal and earth.
   If the test lamp does not illuminate, test the ignition circuit for a short to ground or an open/high resistance. If the circuit fuse is open, test the control circuits of the K20 ECM for a short-circuit to earth. If the circuits test normal, replace the K20 ECM.
5. If equipped, vehicle in Service Mode, verify that a test lamp illuminates between the accessory wake-up serial data 2 circuit terminal and earth.
   If the test lamp does not illuminate, test the entire circuit, including the B+ circuit to the K114B hybrid powertrain control module 2, for an open-circuit/high resistance or short-circuit to earth. If the circuits test normal, replace the K114B hybrid powertrain control module 2.
6. Vehicle OFF, disconnect the harness connector at the control module setting the DTC.
7. Vehicle OFF, and all vehicle systems OFF, all keys at least 3 metres away from vehicle, all access doors closed. It may take up to 2 minutes for all vehicle systems to power down. Test for less than 2 Ω in each powertrain high-speed GMLAN serial data circuit between the K20 ECM and the control module setting the DTC.
   If greater than the specified range, test the serial data circuit for an open-circuit/high resistance between the K20 ECM and the control module setting the DTC.
8. If the circuits test normal, replace the K20 ECM.

Repair Instructions

Perform the Diagnostic Repair Verification after completing the diagnostic procedure.

- GMLAN Wiring Repairs
- Control Module References for control module replacement, programming and setup

&#169© Copyright Chevrolet. All rights reserved

DTC U1821

Diagnostic Instructions

- Perform the Diagnostic System Check - Vehicle prior to using this diagnostic procedure.
- Review Strategy Based Diagnosis for an overview of the diagnostic approach.
- Diagnostic Procedure Instructions provides an overview of each diagnostic category.

DTC Descriptor

DTC U1821 00: Lost Communication with 14V Power Module on Powertrain Expansion Communication Bus

Diagnostic Fault Information

Circuit	Short to Ground	Open/High Resistance	Short to Voltage	Signal Performance
B+	U1821	U1821	--	--
Ignition	U1821	U1821	--	--
Accessory Wake Up Serial Data 2	P06E4*	U1821	--	--
Powertrain High-Speed GMLAN Serial Data (+)	U0074*	U1821*	U0074*	-
Powertrain High-Speed GMLAN Serial Data (-)	U0074*	U1821*	U0074*	--
Ground	--	U1821	--	--
* Other DTCs may set with this fault.				

Circuit/System Description

Control modules connected to the serial data circuits monitor for serial data communications during normal vehicle operation. Operating information and commands are exchanged among the control modules. The control modules have prerecorded information about what messages are needed to be exchanged on the serial data circuits, for each virtual network. The messages are supervised and also, some periodic messages are used by the receiver module as an availability indication of the transmitter module. Each message contains the identification number of the transmitter module.

Conditions for Running the DTC

- The system voltage is between 9–16 V.
- The vehicle power mode master requires serial data communication to occur from this specific module.

Conditions for Setting the DTC

A supervised periodic message that includes the transmitter module availability has not been received.

Action Taken When the DTC Sets

The control module is never signalled. Therefore, the specific subsystems will not function.

Conditions for Clearing the DTC

- A current DTC clears when the malfunction is no longer present.
- A history DTC clears when the module ignition cycle counter reaches the reset threshold of 50, without a repeat of the malfunction.

Diagnostic Aids

- Sometimes, while diagnosing a specific customer concern or after a repair, you may notice a history U-code present. However, there is no associated "current" or "active" status. Loss-of- communication U-codes such as these can set for a variety of reasons. Many times, they are transparent to the vehicle operator and technician, and/or have no associated symptoms. Eventually, they will erase themselves automatically after a number of fault-free ignition cycles. This condition would most likely be attributed to one of these scenarios:
  - A control module on the data communication circuit was disconnected while the communication circuit is awake.
  - Power to one or more control modules was interrupted during diagnosis.
  - A low battery condition was present, so some control modules stop communicating when battery voltage drops below a certain threshold.
  - Battery power was restored to the vehicle and control modules on the communication circuit did not all re-initialise at the same time.
  - If a loss-of-communication U-code appears in history for no apparent reason, it is most likely associated with one of the scenarios above. These are all temporary conditions and should never be interpreted as an intermittent fault, causing you to replace a part.
- A control module may have a U-code stored in history that does not require any repairs. Issues with late or corrupted messages between control modules can be temporary with no apparent symptom or complaint; this does not mean the control module is faulty. Do not replace a control module based only on a history U-code.
- Do not replace a control module reporting a U-code. The U-code identifies which control module needs to be diagnosed for a communication issue.
- Communication may be available between the control module and the scan tool with one or more GMLAN serial data systems inoperative. This condition is due to the control module using multiple GMLAN busses.
- Use Data Link References to determine what GMLAN serial data communications the non communicating control module uses.
- The control module may not have internal protection for specific control circuits and may open a B+ or ignition fuse. If a fuse is open and the B+ or ignition circuit is not shorted to earth, ensure none of the control circuits are shorted to earth before replacing the non communicating control module.

Reference Information

Schematic Reference

- Data Communication Schematics
- Control Module References

Connector End View Reference

Component Connector End Views

Description and Operation

Data Link Communications Description and Operation

Electrical Information Reference

- Circuit Testing
- Connector Repairs
- Testing for Intermittent Conditions and Poor Connections
- Wiring Repairs

Scan Tool Reference

Control Module References for scan tool information

Circuit/System Verification

1. Verify that DTC U0074, P06E4, B1428, B1370, B1380, B1440, B1441, B1325, or P0562 is not set.
   If any of the DTCs are set, refer to Diagnostic Trouble Code (DTC) List - Vehicle .
2. Verify that DTCs U1817, U1818 and U182D are not set.
   If all the DTCs are set, refer to DTC U0074 .

Circuit/System Testing

Note: Use the schematic to identify the following:

- The control module location on the powertrain high-speed GMLAN serial data circuits
- The control module B+, ignition, earth, accessory wake-up serial data 2 and serial data circuit terminals

1. Vehicle OFF, disconnect the low-voltage harness connector at the K1 14 V power module.
2. Test for less than 5 Ω between the K1 14 V power module case and earth.
   If greater than the specified range, test the earth strap for an open-circuit/high resistance.
3. If equipped, vehicle in Service Mode, verify that a test lamp illuminates between each B+ circuit terminal and earth.
   If the test lamp does not illuminate, test the B+ circuit for a short to ground or an open/high resistance. If the circuit fuse is open, test the control circuits of the K1 14 V power module for a short-circuit to earth. If the circuits test normal, replace the K1 14V power module.
4. If equipped, vehicle in Service Mode, verify that a test lamp illuminates between each ignition circuit terminal and earth.
   If the test lamp does not illuminate, test the ignition circuit for a short to ground or an open/high resistance. If the circuit fuse is open, test the control circuits of the K1 14 V power module for a short-circuit to earth. If the circuits test normal, replace the K1 14V power module.
5. If equipped, vehicle in Service Mode, verify that a test lamp illuminates between the accessory wake-up serial data 2 circuit terminal and earth.
   If the test lamp does not illuminate, test the entire circuit, including the B+ circuit to the K114B hybrid powertrain control module 2, for an open-circuit/high resistance or short-circuit to earth. If the circuits test normal, replace the K114B hybrid powertrain control module 2.
6. Vehicle OFF, disconnect the harness connector at the control module setting the DTC.
7. Vehicle OFF, and all vehicle systems OFF, all keys at least 3 metres away from vehicle, all access doors closed. It may take up to 2 minutes for all vehicle systems to power down. Test for less than 2 Ω in each powertrain high-speed GMLAN serial data circuit between the K1 14 V power module and the control module setting the DTC.
   If greater than the specified range, test the serial data circuit for an open-circuit/high resistance between the K1 14V power module and the control module setting the DTC.
8. If all circuits test normal, replace the K1 14 V power module.

Repair Instructions

Perform the Diagnostic Repair Verification after completing the diagnostic procedure.

- GMLAN Wiring Repairs
- Control Module References for control module replacement, programming and setup

&#169© Copyright Chevrolet. All rights reserved

DTC U182D

Diagnostic Instructions

- Perform the Diagnostic System Check - Vehicle prior to using this diagnostic procedure.
- Review Strategy Based Diagnosis for an overview of the diagnostic approach.
- Diagnostic Procedure Instructions provides an overview of each diagnostic category.

DTC Descriptor

DTC U182D 00: Lost Communication with Hybrid Powertrain Control Module 2 on Powertrain Expansion Communication Bus

Diagnostic Fault Information

Circuit	Short to Ground	Open/High Resistance	Short to Voltage	Signal Performance
B+	U182D	U182D	--	--
Ignition	U182D	U182D	--	--
Accessory Wake Up Serial Data	U1814	U182D	--	--
Powertrain High-Speed GMLAN Serial Data (+)	U0074*	U182D, U0074	U0074*	-
Powertrain High-Speed GMLAN Serial Data (-)	U0074*	U182D, U0074	U0074*	--
Ground	--	U182D	--	--
* Other DTCs may set with this fault.				

Circuit/System Description

The serial data circuit is the means by which the control modules in the vehicle communicate with each other. When the vehicle is ON, each control module communicating on the serial data circuit sends a state of health (SOH) message to ensure that the control module is operating properly. When hybrid powertrain control module 2 stops communicating on the serial data circuit, for example if the hybrid powertrain control module 2 loses power or earth, the SOH message it normally sends on the serial data circuit disappears. Other control modules on the serial data circuit, which expect to receive that SOH message, detect its absence; those control modules in turn set a DTC associated with the loss of SOH of the hybrid powertrain control module 2. A loss of serial data communications DTC does not represent a failure of the control modules that contain the stored code.

Conditions for Running the DTC

The system voltage is at least 11 V.

Conditions for Setting the DTC

A supervised periodic message that includes the transmitter module availability has not been received for 10 seconds.

Action Taken When the DTC Sets

The DTC U182D is a type B DTC.

Conditions for Clearing the DTC

The DTC U182D is a type B DTC.

Diagnostic Aids

- Sometimes, while diagnosing a specific customer concern or after a repair, you may notice a history U-code present. However, there is no associated "current" or "active" status. Loss-of- communication U-codes such as these can set for a variety of reasons. Many times, they are transparent to the vehicle operator and technician, and/or have no associated symptoms. Eventually, they will erase themselves automatically after a number of fault-free ignition cycles. This condition would most likely be attributed to one of these scenarios:
  - A control module on the data communication circuit was disconnected while the communication circuit is awake.
  - Power to one or more control modules was interrupted during diagnosis.
  - A low battery condition was present, so some control modules stop communicating when battery voltage drops below a certain threshold.
  - Battery power was restored to the vehicle and control modules on the communication circuit did not all re-initialise at the same time.
  - If a loss-of-communication U-code appears in history for no apparent reason, it is most likely associated with one of the scenarios above. These are all temporary conditions and should never be interpreted as an intermittent fault, causing you to replace a part.
- A control module may have a U-code stored in history that does not require any repairs. Issues with late or corrupted messages between control modules can be temporary with no apparent symptom or complaint; this does not mean the control module is faulty. Do not replace a control module based only on a history U-code.
- Do not replace a control module reporting a U-code. The U-code identifies which control module needs to be diagnosed for a communication issue.
- Communication may be available between the control module and the scan tool with one or more GMLAN serial data systems inoperative. This condition is due to the control module using multiple GMLAN busses.
- Use Data Link References to determine what GMLAN serial data communications the non communicating control module uses.
- The control module may not have internal protection for specific control circuits and may open a B+ or ignition fuse. If a fuse is open and the B+ or ignition circuit is not shorted to ground, ensure none of the control circuits are shorted to ground before replacing the control module.

Reference Information

Schematic Reference

- Data Communication Schematics
- Control Module References

Connector End View Reference

Component Connector End Views

Description and Operation

Data Link Communications Description and Operation

Electrical Information Reference

- Circuit Testing
- Connector Repairs
- Testing for Intermittent Conditions and Poor Connections
- Wiring Repairs

Scan Tool Reference

Control Module References for scan tool information

Circuit/System Verification

1. Verify that DTC U0074, P06E4, B1428, B1370, B1380, B1440, B1441, B1325, or P0562 is not set.
   If any of the DTCs are set, refer to Diagnostic Trouble Code (DTC) List - Vehicle .
2. Verify that DTCs U1817, U1818 and U1821 are not set.
   If all the DTCs are set, refer to DTC U0074 .

Circuit/System Testing

Note: Use the schematic to identify the following:

- The control module location on powertrain high-speed GMLAN serial data circuits
- The control module B+, ignition, earth, accessory wake-up serial data and serial data circuit terminals

1. Vehicle OFF, disconnect the harness connector at the K114B hybrid powertrain control module 2.
2. Test for less than 10 Ω between each ground circuit terminal and ground.
   If greater than the specified range, test the ground circuit for an open/high resistance.
3. If equipped, vehicle in Service Mode, verify that a test lamp illuminates between each B+ circuit terminal and earth.
   If the test lamp does not illuminate, test the B+ circuit for a short to ground or an open/high resistance. If the circuit fuse is open, test the control circuits of the K114B hybrid powertrain control module 2 for a short-circuit to earth. If the circuits test normal, replace the K114B hybrid powertrain control module 2.
4. If equipped, vehicle in Service Mode, verify that a test lamp illuminates between each ignition circuit terminal and earth.
   If the test lamp does not illuminate, test the ignition circuit for a short to ground or an open/high resistance. If the circuit fuse is open, test the control circuits of the K114B hybrid powertrain control module 2 for a short-circuit to earth. If the circuits test normal, replace the K114B hybrid powertrain control module 2.
5. If equipped, vehicle in Service Mode, verify that a test lamp illuminates between the accessory wake up serial data circuit terminal and earth.
   If the test lamp does not illuminate, test the entire circuit, including the B+ circuit to the K9 body control module (BCM), for an open-circuit/high resistance or a short-circuit to earth. If the circuits test normal, replace the K9 BCM.
6. Vehicle OFF, disconnect the harness connector at the control module setting the DTC.
7. Vehicle OFF, and all vehicle systems OFF, all keys at least 3 metres away from vehicle, all access doors closed. It may take up to 2 minutes for all vehicle systems to power down. Test for less than 2 Ω in each powertrain high-speed GMLAN serial data circuit between the K114B hybrid powertrain control module 2 and the control module setting the DTC.
   If greater than the specified range, test the serial data circuit for an open-circuit/high resistance between the K114B hybrid powertrain control module 2 and the control module setting the DTC.
8. If all circuits test normal, replace the K114B hybrid powertrain control module 2.

Repair Instructions

Perform the Diagnostic Repair Verification after completing the diagnostic procedure.

- GMLAN Wiring Repairs
- Control Module References for control module replacement, programming and setup

&#169© Copyright Chevrolet. All rights reserved

DTC U182E or U182F

Diagnostic Instructions

- Perform the Diagnostic System Check - Vehicle prior to using this diagnostic procedure.
- Review Strategy Based Diagnosis for an overview of the diagnostic approach.
- Diagnostic Procedure Instructions provides an overview of each diagnostic category.

DTC Descriptors

DTC U182E 00: Drive Motor Control Module 1 Lost Communication with Hybrid Powertrain Control Module 2 on Powertrain Expansion Communication Bus

DTC U182F 00: Drive Motor Control Module 2 Lost Communication with Hybrid Powertrain Control Module 2 on Powertrain Expansion Communication Bus

Diagnostic Fault Information

Circuit	Short to Ground	Open/High Resistance	Short to Voltage	Signal Performance
B+	U182E, U182F	U182E, U182F	--	--
Ignition	U182E, U182F	U182E, U182F	--	--
Accessory Wake Up Serial Data	U1814, U2099	U182E, U182F	--	--
Powertrain High-Speed GMLAN Serial Data (+)	U0074*	U182E, U182F, U0074	U0074*	-
Powertrain High-Speed GMLAN Serial Data (-)	U0074*	U182E, U182F, U0074	U0074*	--
Ground	--	U182E, U182F	--	--
* Other DTCs may set with this fault.				

Circuit/System Description

The serial data circuit is the means by which the control modules in the vehicle communicate with each other. When the vehicle is ON, each control module communicating on the serial data circuit sends a state of health (SOH) message to ensure that the control module is operating properly. When hybrid powertrain control module 2 stops communicating on the serial data circuit, for example if the hybrid powertrain control module 2 loses power or earth, the SOH message it normally sends on the serial data circuit disappears. Other control modules on the serial data circuit, which expect to receive that SOH message, detect its absence; those control modules in turn set a DTC

associated with the loss of SOH of the hybrid powertrain control module 2. A loss of serial data communications DTC does not represent a failure of the control modules that contain the stored code.

Conditions for Running the DTC

The system voltage is at least 10 V.

Conditions for Setting the DTC

A supervised periodic message that includes the transmitter module availability has not been received.

Action Taken When the DTC Sets

The DTCs U182E and U182F are type B DTCs.

Conditions for Clearing the DTC

The DTCs U182E and U182F are type B DTCs.

Diagnostic Aids

- Sometimes, while diagnosing a specific customer concern or after a repair, you may notice a history U-code present. However, there is no associated "current" or "active" status. Loss-of- communication U-codes such as these can set for a variety of reasons. Many times, they are transparent to the vehicle operator and technician, and/or have no associated symptoms. Eventually, they will erase themselves automatically after a number of fault-free ignition cycles. This condition would most likely be attributed to one of these scenarios:
  - A control module on the data communication circuit was disconnected while the communication circuit is awake.
  - Power to one or more control modules was interrupted during diagnosis.
  - A low battery condition was present, so some control modules stop communicating when battery voltage drops below a certain threshold.
  - Battery power was restored to the vehicle and control modules on the communication circuit did not all re-initialise at the same time.
  - If a loss-of-communication U-code appears in history for no apparent reason, it is most likely associated with one of the scenarios above. These are all temporary conditions and should never be interpreted as an intermittent fault, causing you to replace a part.
- A control module may have a U-code stored in history that does not require any repairs. Issues with late or corrupted messages between control modules can be temporary with no apparent symptom or complaint; this does not mean the control module is faulty. Do not replace a control module based only on a history U-code.
- Do not replace a control module reporting a U-code. The U-code identifies which control module needs to be diagnosed for a communication issue.
- Communication may be available between the control module and the scan tool with one or more GMLAN serial data systems inoperative. This condition is due to the control module using multiple GMLAN busses.
- Use Data Link References to determine what GMLAN serial data communications the non communicating control module uses.
- The control module may not have internal protection for specific control circuits and may open a B+ or ignition fuse. If a fuse is open and the B+ or ignition circuit is not

shorted to ground, ensure none of the control circuits are shorted to ground before replacing the control module.

Reference Information

Schematic Reference

- Data Communication Schematics
- Control Module References

Connector End View Reference

Component Connector End Views

Description and Operation

Data Link Communications Description and Operation

Electrical Information Reference

- Circuit Testing
- Connector Repairs
- Testing for Intermittent Conditions and Poor Connections
- Wiring Repairs

Scan Tool Reference

Control Module References for scan tool information

Circuit/System Verification

Verify that DTC U0074, P06E4, B1428, B1370, B1380, B1440, B1441, B1325, or P0562 is not set.

If any of the DTCs are set, refer to Diagnostic Trouble Code (DTC) List - Vehicle .

Circuit/System Testing

Note: Use the schematic to identify the following:

- The control module location on powertrain high-speed GMLAN serial data circuits

- The control module B+, ignition, earth, accessory wake-up serial data and serial data circuit terminals

1. Vehicle OFF, disconnect the harness connector at the K114B hybrid powertrain control module 2.
2. Test for less than 10 Ω between each ground circuit terminal and ground.
   If greater than the specified range, test the ground circuit for an open/high resistance.
3. If equipped, vehicle in Service Mode, verify that a test lamp illuminates between each B+ circuit terminal and earth.
   If the test lamp does not illuminate, test the B+ circuit for a short to ground or an open/high resistance. If the circuit fuse is open, test the control circuits of the K114B hybrid powertrain control module 2 for a short-circuit to earth. If the circuits test normal, replace the K114B hybrid powertrain control module 2.
4. If equipped, vehicle in Service Mode, verify that a test lamp illuminates between each ignition circuit terminal and earth.
   If the test lamp does not illuminate, test the ignition circuit for a short to ground or an open/high resistance. If the circuit fuse is open, test the control circuits of the K114B hybrid powertrain control module 2 for a short-circuit to earth. If the circuits test normal, replace the K114B hybrid powertrain control module 2.
5. If equipped, vehicle in Service Mode, verify that a test lamp illuminates between the accessory wake up serial data circuit terminal and earth.
   If the test lamp does not illuminate, test the entire circuit, including the B+ circuit to the K9 body control module (BCM), for an open-circuit/high resistance or a short-circuit to earth. If the circuits test normal, replace the K9 BCM.
6. Vehicle OFF, disconnect the X1 harness connector at the T6 power inverter module.
7. Vehicle OFF, and all vehicle systems OFF, all keys at least 3 metres away from vehicle, all access doors closed. It may take up to 2 minutes for all vehicle systems to power down. Test for less than 2 Ω in each powertrain high-speed GMLAN serial data circuit between the K114B hybrid powertrain control module 2 and the T6 power inverter module.
   If greater than the specified range, test the serial data circuit for an open/high-resistance between the K114B hybrid powertrain control module 2 and the T6 power inverter module.
8. If all circuits test normal, replace the K114B hybrid powertrain control module 2.

Repair Instructions

Perform the Diagnostic Repair Verification after completing the diagnostic procedure.

- GMLAN Wiring Repairs
- Control Module References for control module replacement, programming and setup

&#169© Copyright Chevrolet. All rights reserved

DTC U1833

Diagnostic Instructions

- Perform the Diagnostic System Check - Vehicle prior to using this diagnostic procedure.
- Review Strategy Based Diagnosis for an overview of the diagnostic approach.
- Diagnostic Procedure Instructions provides an overview of each diagnostic category.

DTC Descriptor

DTC U1833 00: Lost Communication with Electronic Brake Control Module on Chassis Expansion Communication Bus

Diagnostic Fault Information

Circuit	Short to Ground	Open/High Resistance	Short to Voltage	Signal Performance
B+	U1833	U1833	--	--
Ignition	U1833	U1833	--	--
Accessory Wake Up Serial Data 2	P06E4, U0121, U0129, U1833	U0129, U1833	--	--
Chassis High Speed GMLAN Serial Data (+)	U0077*	U0077, U1833	U0077*	-
Chassis High Speed GMLAN Serial Data (-)	U0077*	U0077, U1833	U0077*	--
Ground	--	U0121, U0129, U1833	--	--
* Scan tool may not communicate with chassis high-speed GMLAN device				

Circuit/System Description

Control modules connected to the serial data circuits monitor for serial data communications during normal vehicle operation. Operating information and commands are exchanged among the control modules. The control modules have prerecorded information about what messages are needed to be exchanged on the serial data circuits, for each virtual network. The messages are supervised and also, some periodic messages are used by the receiver module as an availability indication of the transmitter module. Each message contains the identification number of the transmitter module.

Conditions for Running the DTC

The system voltage is at least 10 V.

Conditions for Setting the DTC

A supervised periodic message that includes the transmitter module availability has not been received.

Action Taken When the DTC Sets

- A driver information centre message and/or a warning indicator may be displayed.
- The DTC U1833 is a type B DTC.

Conditions for Clearing the DTC

The DTC U1833 is a type B DTC.

Diagnostic Aids

- Sometimes, while diagnosing a specific customer concern or after a repair, you may notice a history U-code present. However, there is no associated "current" or "active" status. Loss-of- communication U-codes such as these can set for a variety of reasons. Many times, they are transparent to the vehicle operator and technician, and/or have no associated symptoms. Eventually, they will erase themselves automatically after a number of fault-free ignition cycles. This condition would most likely be attributed to one of these scenarios:
  - A control module on the data communication circuit was disconnected while the communication circuit is awake.
  - Power to one or more control modules was interrupted during diagnosis.
  - A low battery condition was present, so some control modules stop communicating when battery voltage drops below a certain threshold.
  - Battery power was restored to the vehicle and control modules on the communication circuit did not all re-initialise at the same time.
  - If a loss-of-communication U-code appears in history for no apparent reason, it is most likely associated with one of the scenarios above. These are all temporary conditions and should never be interpreted as an intermittent fault, causing you to replace a part.
- A control module may have a U-code stored in history that does not require any repairs. Issues with late or corrupted messages between control modules can be temporary with no apparent symptom or complaint; this does not mean the control module is faulty. Do not replace a control module based only on a history U-code.
- Do not replace a control module reporting a U-code. The U-code identifies which control module needs to be diagnosed for a communication issue.
- Communication may be available between the control module and the scan tool with one or more GMLAN serial data systems inoperative. This condition is due to the control module using multiple GMLAN busses.
- Use Data Link References to determine what GMLAN serial data communications the non communicating control module uses.
- The control module may not have internal protection for specific control circuits and may open a B+ or ignition fuse. If a fuse is open and the B+ or ignition circuit is not shorted to earth, ensure none of the control circuits are shorted to earth before replacing the non communicating control module.

Reference Information

Schematic Reference

- Data Communication Schematics
- Control Module References

Connector End View Reference

Component Connector End Views

Description and Operation

Data Link Communications Description and Operation

Electrical Information Reference

- Circuit Testing
- Connector Repairs
- Testing for Intermittent Conditions and Poor Connections
- Wiring Repairs

Scan Tool Reference

Control Module References for scan tool information

Circuit/System Verification

1. Verify that DTC U0121 or U0129 is not set.
   If any of the DTCs are set, refer to DTC U0100-U02FF .
2. Verify that DTC U0077, P06E4, U1814, U2099, B1428, B1370, B1380, B1440, B1441, B1325, or P0562 is not set.
   If any of the DTCs are set, refer to Diagnostic Trouble Code (DTC) List - Vehicle .

Circuit/System Testing

Note: Use the schematic to identify the following:
- Control module location on the chassis high-speed GMLAN serial data circuits
- Control module B+, ignition, earth, accessory wake-up serial data 2 and serial data circuit terminals

1. Vehicle OFF, disconnect the harness connector at the K17 electronic brake control module (EBCM).

2. Test for less than 10 Ω between each ground circuit terminal and ground.
   If greater than the specified range, test the ground circuit for an open/high resistance.
3. If equipped, vehicle in Service Mode, verify that a test lamp illuminates between each B+ circuit terminal and earth.
   If the test lamp does not illuminate, test the B+ circuit for a short to ground or an open/high resistance. If the circuit fuse is open, test the control circuits of the K17 EBCM for a short-circuit to earth. If the circuits test normal, replace the K17 EBCM.
4. If equipped, vehicle in Service Mode, verify that a test lamp illuminates between each ignition circuit terminal and earth.
   If the test lamp does not illuminate, test the ignition circuit for a short to ground or an open/high resistance. If the circuit fuse is open, test the control circuits of the K17 EBCM for a short-circuit to earth. If the circuits test normal, replace the K17 EBCM.
5. If equipped, vehicle in Service Mode, verify that a test lamp illuminates between the accessory wake-up serial data 2 circuit terminal and earth.
   If the test lamp does not illuminate, test the entire circuit, including the B+ circuit to the K114B hybrid powertrain control module 2, for an open-circuit/high resistance or short-circuit to earth. If the circuits test normal, replace the K114B hybrid powertrain control module 2.
6. Vehicle OFF, disconnect the harness connector at the control module setting the DTC.
7. Vehicle OFF, and all vehicle systems OFF, all keys at least 3 metres away from vehicle, all access doors closed. It may take up to 2 minutes for all vehicle systems to power down. Test for less than 2 Ω in each chassis high-speed GMLAN serial data circuit between the K17 EBCM and the control module setting the DTC.
   If greater than the specified range, test the serial data circuit for an open-circuit/high resistance between the K17 EBCM and the control module setting the DTC.
8. If all circuits test normal, replace the K17 EBCM.

Repair Instructions

Perform the Diagnostic Repair Verification after completing the diagnostic procedure.

- GMLAN Wiring Repairs
- Control Module References for control module replacement, programming and setup

&#169© Copyright Chevrolet. All rights reserved

DTC U1838

Diagnostic Instructions

- Perform the Diagnostic System Check - Vehicle prior to using this diagnostic procedure.
- Review Strategy Based Diagnosis for an overview of the diagnostic approach.
- Diagnostic Procedure Instructions provides an overview of each diagnostic category.

DTC Descriptor

DTC U1838 00: Lost Communication with Battery Charger Control Module on High Voltage Energy Management Communication Bus

Diagnostic Fault Information

Circuit	Short to Ground	Open/High Resistance	Short to Voltage	Signal Performance
B+	U1838	U1838	--	--
Ignition	U1838	U1838	--	--
Accessory Wake Up Serial Data 2	P06E4, U1838	U1838	--	--
High-Voltage Energy Management Communication Enable	P1EB9, U1838	U1838	--	--
Chassis High Speed GMLAN Serial Data (+)	U007A*	U007A, U1838*	U007A*	-
Chassis High Speed GMLAN Serial Data (-)	U007A*	U007A, U1838*	U007A*	--
Ground	--	U1838	--	--
* Other DTCs may be set with this fault.				

Circuit/System Description

Control modules connected to the serial data circuits monitor for serial data communications during normal vehicle operation. Operating information and commands are exchanged among the control modules. The control modules have prerecorded information about what messages are needed to be exchanged on the serial data circuits, for each virtual network. The messages are supervised and also, some periodic messages are used by the receiver module as an availability indication of the transmitter module. Each message contains the identification number of the transmitter module.

Conditions for Running the DTC

The system voltage is more than 10 V.

Conditions for Setting the DTC

A supervised periodic message that includes the transmitter module availability has not been received.

Action Taken When the DTC Sets

The DTC U1838 is a type A DTC.

Conditions for Clearing the DTC

The DTC U1838 is a type A DTC.

Diagnostic Aids

- Sometimes, while diagnosing a specific customer concern or after a repair, you may notice a history U-code present. However, there is no associated "current" or "active" status. Loss-of- communication U-codes such as these can set for a variety of reasons. Many times, they are transparent to the vehicle operator and technician, and/or have no associated symptoms. Eventually, they will erase themselves automatically after a number of fault-free ignition cycles. This condition would most likely be attributed to one of these scenarios:
  - A control module on the data communication circuit was disconnected while the communication circuit is awake.
  - Power to one or more control modules was interrupted during diagnosis.
  - A low battery condition was present, so some control modules stop communicating when battery voltage drops below a certain threshold.
  - Battery power was restored to the vehicle and control modules on the communication circuit did not all re-initialise at the same time.
  - If a loss-of-communication U-code appears in history for no apparent reason, it is most likely associated with one of the scenarios above. These are all temporary conditions and should never be interpreted as an intermittent fault, causing you to replace a part.
- A control module may have a U-code stored in history that does not require any repairs. Issues with late or corrupted messages between control modules can be temporary with no apparent symptom or complaint; this does not mean the control module is faulty. Do not replace a control module based only on a history U-code.
- Do not replace a control module reporting a U-code. The U-code identifies which control module needs to be diagnosed for a communication issue.
- Communication may be available between the control module and the scan tool with one or more GMLAN serial data systems inoperative. This condition is due to the control module using multiple GMLAN busses.
- Use Data Link References to determine what GMLAN serial data communications the non communicating control module uses.
- The control module may not have internal protection for specific control circuits and may open a B+ or ignition fuse. If a fuse is open and the B+ or ignition circuit is not shorted to earth, ensure none of the control circuits are shorted to earth before replacing the non communicating control module.

Reference Information

Schematic Reference

- Data Communication Schematics
- Control Module References

Connector End View Reference

Component Connector End Views

Description and Operation

Data Link Communications Description and Operation

Electrical Information Reference

- Circuit Testing
- Connector Repairs
- Testing for Intermittent Conditions and Poor Connections
- Wiring Repairs

Scan Tool Reference

Control Module References for scan tool information

Circuit/System Verification

1. Verify that DTC U007A, P06E4, P1EB9, B1428, B1370, B1380, B1440, B1441, B1325, or P0562 is not set.
   If any of the DTCs are set, refer to Diagnostic Trouble Code (DTC) List - Vehicle .
2. Verify that DTC U185A is not set.
   If DTC U185A is set, refer to DTC U007A .

Circuit/System Testing

Note: Use the schematic to identify the following:

- The control module locations on the all GMLAN serial data circuits
- The control module B+, ignition, earth, accessory wake-up serial data 2, high-voltage energy management communication enable and serial data circuit terminals

1. Vehicle OFF, disconnect the low-voltage harness connector at the T18 battery charger.
2. Test for less than 10 Ω between each ground circuit terminal and ground.
   If greater than the specified range, test the ground circuit for an open/high resistance.
3. If equipped, vehicle in Service Mode, verify that a test lamp illuminates between each B+ circuit terminal and earth.
   If the test lamp does not illuminate, test the B+ circuit for a short to ground or an open/high resistance. If the circuit fuse is open, test the control circuits of the T18 battery charger for a short-circuit to earth. If the circuits test normal, replace the T18 battery charger.
4. If equipped, vehicle in Service Mode, verify that a test lamp illuminates between each ignition circuit terminal and earth.
   If the test lamp does not illuminate, test the ignition circuit for a short to ground or an open/high resistance. If the circuit fuse is open, test the control circuits of the T18 battery charger for a short-circuit to earth. If the circuits test normal, replace the T18 battery charger.
5. If equipped, vehicle in Service Mode, verify that a test lamp illuminates between the accessory wake-up serial data 2 circuit terminal and earth.
   If the test lamp does not illuminate, test the entire circuit, including the B+ circuit to the K114B hybrid powertrain control module 2, for an open-circuit/high resistance or short-circuit to earth. If the circuits test normal, replace the K114B hybrid powertrain control module 2.
6. If equipped, vehicle in Service Mode, verify that a test lamp illuminates between the high-voltage energy management communication enable circuit terminal and earth.
   If the test lamp does not illuminate, test the entire circuit, including the B+ circuit to the K114B hybrid powertrain control module 2, for an open-circuit/high resistance or short-circuit to earth. If the circuits test normal, replace the K114B hybrid powertrain control module 2.
7. Vehicle OFF, disconnect the harness connector at the control module setting the DTC.
8. Vehicle OFF, and all vehicle systems OFF, all keys at least 3 metres away from vehicle, all access doors closed. It may take up to 2 minutes for all vehicle systems to power down. Test for less than 2 Ω in each high-voltage energy serial data circuit between the T18 battery charger and the control module setting the DTC.
   If greater than the specified range, test the serial data circuit for an open-circuit/high resistance between the T18 battery charger and the control module setting the DTC.
9. If all circuits test normal, replace the T18 battery charger.

Repair Instructions

Perform the Diagnostic Repair Verification after completing the diagnostic procedure.

- GMLAN Wiring Repairs
- Control Module References for control module replacement, programming and setup

&#169© Copyright Chevrolet. All rights reserved

DTC U1839

Diagnostic Instructions

- Perform the Diagnostic System Check - Vehicle prior to using this diagnostic procedure.
- Review Strategy Based Diagnosis for an overview of the diagnostic approach.
- Diagnostic Procedure Instructions provides an overview of each diagnostic category.

DTC Descriptor

DTC U1839 00: Auxiliary Transmission Fluid Pump Control Module Lost Communication with Engine Control Module

Diagnostic Fault Information

Circuit	Short to Ground	Open/High Resistance	Short to Voltage	Signal Performance
B+	U1839	U1839	--	--
Ignition	U1839	U1839	--	--
Accessory Wake Up Serial Data 2	P06E4*	U1839*	--	--
High Speed GMLAN Serial Data (+)	U0073*	U0073, U1839*	U0073*	--
High Speed GMLAN Serial Data (-)	U0073*	U0073, U1839*	U0073*	-
Powertrain High-Speed GMLAN Serial Data (+)	U0074*	U0074, U1839*	U0074*	-
Powertrain High-Speed GMLAN Serial Data (-)	U0074*	U0074, U1839*	U0074*	--
Ground	--	U1839	--	--
* Other modules/DTCs may set with this fault and multiple symptoms including a no-start condition may occur.				

Circuit/System Description

Control modules connected to the serial data circuits monitor for serial data communications during normal vehicle operation. Operating information and commands are exchanged among the control modules. The control modules have prerecorded information about what messages are needed to be exchanged on the serial data circuits, for each virtual network. The messages are supervised and also, some periodic messages are used by the receiver module as an availability indication of the transmitter module. Each message contains the identification number of the transmitter module.

The communication for auxiliary transmission fluid pump control module and all drive motor control modules is handled through the hybrid powertrain control module 1. The auxiliary transmission fluid pump control module and the hybrid powertrain control module 1 are all internal to the power inverter module. All circuits to the auxiliary transmission fluid pump control module and hybrid powertrain control module 1 are also internal to the power inverter module. Communication diagnostics for the serial data, including control module power and earth as well as the wake-up circuits for all drive motor control modules and the hybrid powertrain control module 1 are all diagnosed from external sources only to the power inverter module connector.

Conditions for Running the DTC

- The system voltage is at least 10 V.
- The vehicle power mode master requires serial data communication to occur from this specific control module.

Conditions for Setting the DTC

A supervised periodic message that includes the transmitter module availability has not been received.

Action Taken When the DTC Sets

The DTC U1839 is a type B DTC.

Conditions for Clearing the DTC

The DTC U1839 is a type B DTC.

Diagnostic Aids

- Sometimes, while diagnosing a specific customer concern or after a repair, you may notice a history U-code present. However, there is no associated "current" or "active" status. Loss-of- communication U-codes such as these can set for a variety of reasons. Many times, they are transparent to the vehicle operator and technician, and/or have no associated symptoms. Eventually, they will erase themselves automatically after a number of fault-free ignition cycles. This condition would most likely be attributed to one of these scenarios:
  - A control module on the data communication circuit was disconnected while the communication circuit is awake.
  - Power to one or more control modules was interrupted during diagnosis.
  - A low battery condition was present, so some control modules stop communicating when battery voltage drops below a certain threshold.
  - Battery power was restored to the vehicle and control modules on the communication circuit did not all re-initialise at the same time.
  - If a loss-of-communication U-code appears in history for no apparent reason, it is most likely associated with one of the scenarios above. These are all temporary conditions and should never be interpreted as an intermittent fault, causing you to replace a part.
- A control module may have a U-code stored in history that does not require any repairs. Issues with late or corrupted messages between control modules can be temporary with no apparent symptom or complaint; this does not mean the control module is faulty. Do not replace a control module based only on a history U-code.

- Do not replace a control module reporting a U-code. The U-code identifies which control module needs to be diagnosed for a communication issue.
- Communication may be available between the control module and the scan tool with one or more GMLAN serial data systems inoperative. This condition is due to the control module using multiple GMLAN busses.
- Use Data Link References to determine what GMLAN serial data communications the non communicating control module uses.
- The control module may not have internal protection for specific control circuits and may open a B+ or ignition fuse. If a fuse is open and the B+ or ignition circuit is not shorted to earth, ensure none of the control circuits are shorted to earth before replacing the non communicating control module.

Reference Information

Schematic Reference

- Data Communication Schematics
- Control Module References

Connector End View Reference

Component Connector End Views

Description and Operation

Data Link Communications Description and Operation

Electrical Information Reference

- Circuit Testing
- Connector Repairs
- Testing for Intermittent Conditions and Poor Connections
- Wiring Repairs

Scan Tool Reference

Control Module References for scan tool information

Circuit/System Verification

1. Verify that DTC U0100 is not set.
   If the DTC is set, refer to DTC U0100-U02FF .
2. Verify that DTC U0073, U0074, P06E4, U1814, U2099, B1428, B1370, B1380, B1440, B1441, B1325, or P0562 is not set.

If any of the DTCs are set, refer to Diagnostic Trouble Code (DTC) List - Vehicle .

Circuit/System Testing

Note: Use the schematic to identify the following:

- Control module locations on the high-speed GMLAN and powertrain high-speed GMLAN serial data circuits
- The control module B+, ignition, earth, accessory wake-up serial data 2 and serial data circuit terminals

1. Vehicle OFF, disconnect harness connector at the K20 engine control module (ECM).
2. Test for less than 10 Ω between each ground circuit terminal and ground.
   If greater than the specified value, test the ground circuit for an open/high resistance.
3. If equipped, vehicle in Service Mode, verify that a test lamp illuminates between each B+ circuit terminal and earth.
   If the test lamp does not illuminate, test the B+ circuit for a short to ground or an open/high resistance. If the circuit fuse is open, test the control circuits of the K20 ECM for a short-circuit to earth. If the circuits test normal, replace the K20 ECM.
4. If equipped, vehicle in Service Mode, verify that a test lamp illuminates between each ignition circuit terminal and earth.
   If the test lamp does not illuminate, test the ignition circuit for a short to ground or an open/high resistance. If the circuit fuse is open, test the control circuits of the K20 ECM for a short-circuit to earth. If the circuits test normal, replace the K20 ECM.
5. If equipped, vehicle in Service Mode, verify that a test lamp illuminates between the accessory wake-up serial data 2 circuit terminal and earth.
   If the test lamp does not illuminate, test the entire circuit, including the B+ circuit to the K114B hybrid powertrain control module 2, for an open-circuit/high resistance or short-circuit to earth. If the circuits test normal, replace the K114B hybrid powertrain control module 2.
6. Vehicle OFF, disconnect the X1 harness connector at the T6 power inverter module.
7. Vehicle OFF, and all vehicle systems OFF, all keys at least 3 metres away from vehicle, all access doors closed. It may take up to 2 minutes for all vehicle systems to power down. Test for less than 2 Ω in each serial data circuit between the K20 ECM and the T6 power inverter module.
   If greater than the specified range, test the serial data circuit for an open-circuit/high resistance between the K20 ECM and the T6 power inverter module.
8. If all circuits test normal, replace the K20 ECM.

Repair Instructions

Perform the Diagnostic Repair Verification after completing the diagnostic procedure.

- GMLAN Wiring Repairs
- Control Module References for control module replacement, programming and setup

&#169© Copyright Chevrolet. All rights reserved

DTC U183B

Diagnostic Instructions

- Perform the Diagnostic System Check - Vehicle prior to using this diagnostic procedure.
- Review Strategy Based Diagnosis for an overview of the diagnostic approach.
- Diagnostic Procedure Instructions provides an overview of each diagnostic category.

DTC Descriptor

DTC U183B 00: Auxiliary Transmission Fluid Pump Control Module Lost Communication with Transmission Control Module

Diagnostic Fault Information

Circuit	Short to Ground	Open/High Resistance	Short to Voltage	Signal Performance
B+	U183B*	U183B	--	--
Ignition	U183B*	U183B*	--	--
Accessory Wake Up Serial Data 2	P06E4*	U183B*	--	--
High Speed GMLAN Serial Data (+)	U0073*	U0073, U183B*	U0073*	--
High Speed GMLAN Serial Data (-)	U0073*	U0073, U183B*	U0073*	--
Ground	--	U183B*	--	--
* Other modules/DTCs may set and multiple symptoms including a no-start condition may occur with this fault.				

Circuit/System Description

Control modules connected to the serial data circuits monitor for serial data communications during normal vehicle operation. Operating information and commands are exchanged among the control modules. The control modules have prerecorded information about what messages are needed to be exchanged on the serial data circuits, for each virtual network. The messages are supervised and also, some periodic messages are used by the receiver module as an availability indication of the transmitter module. Each message contains the identification number of the transmitter module.

The communication for auxiliary transmission fluid pump control module and all drive motor control modules is handled through the hybrid powertrain control module 1. The

auxiliary transmission fluid pump control module and the hybrid powertrain control module 1 are all internal to the power inverter module. All circuits to the auxiliary transmission fluid pump control module and hybrid powertrain control module 1 are also internal to the power inverter module. Communication diagnostics for the serial data, including control module power and earth as well as the wake-up circuits for auxiliary transmission fluid pump control module and the hybrid powertrain control module 1, are all diagnosed only from sources external to the power inverter module connector.

Conditions for Running the DTC

- The system voltage is at least 10 V.
- The vehicle power mode master requires serial data communication to occur from this specific control module.

Conditions for Setting the DTC

A supervised periodic message that includes the transmitter module availability has not been received.

Action Taken When the DTC Sets

The DTC U183B is a type B DTC.

Conditions for Clearing the DTC

The DTC U183B is a type B DTC.

Diagnostic Aids

Different DTCs may set in different control modules along with this DTC depending on where the fault occurs and the vehicle operating conditions when the fault occurs.

Reference Information

Schematic Reference

- Data Communication Schematics
- Control Module References

Connector End View Reference

Component Connector End Views

Description and Operation

Data Link Communications Description and Operation

Electrical Information Reference

- Circuit Testing
- Connector Repairs
- Testing for Intermittent Conditions and Poor Connections
- Wiring Repairs

Scan Tool Reference

Control Module References for scan tool information

Circuit/System Verification

1. Verify that DTC U0101 is not set.
   If the DTC is set, refer to DTC U0100-U02FF .
2. Verify that DTC U0073, P06E4, B1428, B1370, B1380, B1440, B1441, B1325, or P0562 is not set.
   If any of the DTCs are set, refer to Diagnostic Trouble Code (DTC) List - Vehicle .

Circuit/System Testing

Note: Use the schematic to identify the following:
- Control module location on the high-speed GMLAN serial data circuits
- The control module B+, ignition, earth, accessory wake-up serial data 2 and serial data circuit terminals

1. Vehicle OFF, disconnect harness connector at the K71 transmission control module (TCM).
2. Test for less than 10 Ω between each ground circuit terminal and ground.
   If greater than the specified range, test the ground circuit for an open/high resistance.
3. If equipped, vehicle in Service Mode, verify that a test lamp illuminates between each B+ circuit terminal and earth.
   If the test lamp does not illuminate, test the B+ circuit for a short to ground or an open/high resistance. If the circuit fuse is open, test the control circuits of the K71 TCM for a short-circuit to earth. If the circuits test normal, replace the K71 TCM.
4. If equipped, vehicle in Service Mode, verify that a test lamp illuminates between each ignition circuit terminal and earth.
   If the test lamp does not illuminate, test the ignition circuit for a short to ground or an open/high resistance. If the circuit fuse is open, test the control circuits of the K71 TCM for a short-circuit to earth. If the circuits test normal, replace the K71 TCM.
5. If equipped, vehicle in Service Mode, verify that a test lamp illuminates between the accessory wake-up serial data 2 circuit terminal and earth.
   If the test lamp does not illuminate, test the entire circuit, including the B+ circuit to the K114B hybrid powertrain control module 2, for an open-circuit/high resistance or short-circuit to earth. If the circuits test normal, replace the K114B hybrid powertrain control module 2.
6. Vehicle OFF, disconnect the harness connector at the T6 power inverter module.

7. Vehicle OFF, and all vehicle systems OFF, all keys at least 3 metres away from vehicle, all access doors closed. It may take up to 2 minutes for all vehicle systems to power down. Test for less than 2 Ω in each serial data circuit between the K71 TCM and the T6 power inverter module.
   If greater than the specified range, test the serial data circuit for an open-circuit/high resistance between the K71 TCM and the T6 power inverter module.
8. If all circuits test normal, replace the K71 TCM.

Repair Instructions

Perform the Diagnostic Repair Verification after completing the diagnostic procedure.

- GMLAN Wiring Repairs
- Control Module References for control module replacement, programming and setup

&#169© Copyright Chevrolet. All rights reserved

DTC U183C

Diagnostic Instructions

- Perform the Diagnostic System Check - Vehicle prior to using this diagnostic procedure.
- Review Strategy Based Diagnosis for an overview of the diagnostic approach.
- Diagnostic Procedure Instructions provides an overview of each diagnostic category.

DTC Descriptor

DTC U183C 00: Auxiliary Transmission Fluid Pump Lost Communication with Hybrid Powertrain Control Module 2 on Powertrain Expansion Communication Bus

Diagnostic Fault Information

Circuit	Short to Ground	Open/High Resistance	Short to Voltage	Signal Performance
B+	U183C	U183C	--	--
Ignition	U183C	U183C	--	--
Accessory Wake Up Serial Data	U1814, U2099	U183C	--	--
Powertrain High-Speed GMLAN Serial Data (+)	U0074*	U0074, U183C*	U0074*	-
Powertrain High-Speed GMLAN Serial Data (-)	U0074*	U0074, U183C*	U0074*	--
Ground	--	U183C	--	--
* Other DTCs may set with this fault				

Circuit/System Description

The serial data circuit is the means by which the control modules in the vehicle communicate with each other. When the vehicle is ON, each control module communicating on the serial data circuit sends a state of health (SOH) message to ensure that the control module is operating properly. When hybrid powertrain control module 2 stops communicating on the serial data circuit, for example if the hybrid powertrain control module 2 loses power or earth, the SOH message it normally sends on the serial data circuit disappears. Other control modules on the serial data circuit, which expect to receive that SOH message, detect its absence; those control modules in turn set a DTC associated with the loss of SOH of the hybrid powertrain control module 2. A loss of serial data communications DTC does not represent a failure of the control modules that contain the stored code.

The auxiliary transmission fluid pump control module is controlled by drive motor 3 control module. The communication for auxiliary transmission fluid pump control module and all drive motor control modules is handled through the hybrid powertrain control module 1. The auxiliary transmission fluid pump control module and the hybrid powertrain control module 1 are all internal to the power inverter module. All circuits to the auxiliary transmission fluid pump control module and hybrid powertrain control module 1 are also internal to the power inverter module. Communication diagnostics for the serial data, including control module power and earth as well as the wake-up circuits, for auxiliary transmission fluid pump control module and the hybrid powertrain control module 1 are all diagnosed from external sources only to the power inverter module connector.

Conditions for Running the DTC

The system voltage is at least 10 V.

Conditions for Setting the DTC

A supervised periodic message that includes the transmitter module availability has not been received.

Action Taken When the DTC Sets

The DTC U183C is a type B DTC.

Conditions for Clearing the DTC

The DTC U183C is a type B DTC.

Diagnostic Aids

- Sometimes, while diagnosing a specific customer concern or after a repair, you may notice a history U-code present. However, there is no associated "current" or "active" status. Loss-of- communication U-codes such as these can set for a variety of reasons. Many times, they are transparent to the vehicle operator and technician, and/or have no associated symptoms. Eventually, they will erase themselves automatically after a number of fault-free ignition cycles. This condition would most likely be attributed to one of these scenarios:
  - A control module on the data communication circuit was disconnected while the communication circuit is awake.
  - Power to one or more control modules was interrupted during diagnosis.
  - A low battery condition was present, so some control modules stop communicating when battery voltage drops below a certain threshold.
  - Battery power was restored to the vehicle and control modules on the communication circuit did not all re-initialise at the same time.
  - If a loss-of-communication U-code appears in history for no apparent reason, it is most likely associated with one of the scenarios above. These are all temporary conditions and should never be interpreted as an intermittent fault, causing you to replace a part.
- A control module may have a U-code stored in history that does not require any repairs. Issues with late or corrupted messages between control modules can be temporary with no apparent symptom or complaint; this does not mean the control module is faulty. Do not replace a control module based only on a history U-code.
- Do not replace a control module reporting a U-code. The U-code identifies which control module needs to be diagnosed for a communication issue.

- Communication may be available between the control module and the scan tool with one or more GMLAN serial data systems inoperative. This condition is due to the control module using multiple GMLAN busses.
- Use Data Link References to determine what GMLAN serial data communications the non communicating control module uses.
- The control module may not have internal protection for specific control circuits and may open a B+ or ignition fuse. If a fuse is open and the B+ or ignition circuit is not shorted to ground, ensure none of the control circuits are shorted to ground before replacing the control module.

Reference Information

Schematic Reference

- Data Communication Schematics
- Control Module References

Connector End View Reference

Component Connector End Views

Description and Operation

Data Link Communications Description and Operation

Electrical Information Reference

- Circuit Testing
- Connector Repairs
- Testing for Intermittent Conditions and Poor Connections
- Wiring Repairs

Scan Tool Reference

Control Module References for scan tool information

Circuit/System Verification

Verify that DTC U0074, U1814, U2099, B1428, B1370, B1380, B1440, B1441, B1325 or P0562 is not set.

If any of the DTCs are set, refer to Diagnostic Trouble Code (DTC) List - Vehicle .

Circuit/System Testing

Note: Use the schematic to identify the following:

- The control module location on the powertrain high-speed GMLAN serial data circuits
- The control module B+, ignition, earth, accessory wake-up serial data and serial data circuit terminals

1. Vehicle OFF, disconnect the harness connector at the K114B hybrid powertrain control module 2.
2. Test for less than 10 Ω between each ground circuit terminal and ground.
   If greater than the specified range, test the ground circuit for an open/high resistance.
3. If equipped, vehicle in Service Mode, verify that a test lamp illuminates between each B+ circuit terminal and earth.
   If the test lamp does not illuminate, test the B+ circuit for a short to ground or an open/high resistance. If the circuit fuse is open, test the control circuits of the K114B hybrid powertrain control module 2 for a short-circuit to earth. If the circuits test normal, replace the K114B hybrid powertrain control module 2.
4. If equipped, vehicle in Service Mode, verify that a test lamp illuminates between each ignition circuit terminal and earth.
   If the test lamp does not illuminate, test the ignition circuit for a short to ground or an open/high resistance. If the circuit fuse is open, test the control circuits of the K114B hybrid powertrain control module 2 for a short-circuit to earth. If the circuits test normal, replace the K114B hybrid powertrain control module 2.
5. If equipped, vehicle in Service Mode, verify that a test lamp illuminates between the accessory wake up serial data circuit terminal and earth.
   If the test lamp does not illuminate, test the entire circuit, including the B+ circuit to the K9 body control module (BCM), for an open-circuit/high resistance or a short-circuit to earth. If the circuits test normal, replace the K9 BCM.
6. Vehicle OFF, disconnect the X1 harness connector at the T6 power inverter module.
7. Vehicle OFF, and all vehicle systems OFF, all keys at least 3 metres away from vehicle, all access doors closed. It may take up to 2 minutes for all vehicle systems to power down. Test for less than 2 Ω in each powertrain high-speed GMLAN serial data circuit between the K114B hybrid powertrain control module 2 and the T6 power inverter module.
   If greater than the specified range, test the serial data circuit for an open/high-resistance between the K114B hybrid powertrain control module 2 and the T6 power inverter module.
8. If all circuits test normal, replace the K114B hybrid powertrain control module 2.

Repair Instructions

Perform the Diagnostic Repair Verification after completing the diagnostic procedure.

- GMLAN Wiring Repairs
- Control Module References for control module replacement, programming and setup

&#169© Copyright Chevrolet. All rights reserved

DTC U183E

Diagnostic Instructions

- Perform the Diagnostic System Check - Vehicle prior to using this diagnostic procedure.
- Review Strategy Based Diagnosis for an overview of the diagnostic approach.
- Diagnostic Procedure Instructions provides an overview of each diagnostic category.

DTC Descriptor

DTC U183E 00: Lost Communication with OnStar Module on Low Speed Communication Bus

Diagnostic Fault Information

Circuit	Short to Ground	Open/High Resistance	Short to Voltage	Signal Performance
B+	U183E	U183E	--	--
Ignition	U183E	U183E	--	--
Serial Data Communication Enable	U1814, U2099	U183E	--	--
Low Speed GMLAN Serial Data	U0078, 1	U0078, U183E	U0078, 1	--
Ground	--	U183E	--	--
1. Scan Tool Does Not Communicate With Low-Speed GMLAN Device				

Circuit/System Description

The serial data circuit is the means by which the control modules in the vehicle communicate with each other. Once the scan tool is connected to the serial data circuit through the data link connector (DLC), the scan tool can be used to monitor each control module for diagnostic purposes and to check for diagnostic trouble codes (DTCs). When the vehicle is ON, each control module communicating on the serial data circuit sends a state of health (SOH) message to ensure that the control module is operating properly. When a control module stops communicating on the serial data circuit, for example if the control module loses power or ground, the SOH message it normally sends on the serial data circuit disappears. Other control modules on the serial data circuit, which expect to receive that SOH message, detect its absence; those control modules in turn set a DTC associated with the loss of SOH of the non communicating control module. A loss of serial data communications DTC does not represent a failure of the control modules that contain the stored code.

Conditions for Running the DTC

The system voltage is between 9–16 V.

Conditions for Setting the DTC

A supervised periodic message that includes the transmitter module availability has not been received.

Action Taken When the DTC Sets

The control module is never signalled. Therefore, the specific subsystems will not function.

Conditions for Clearing the DTC

- A current DTC clears when the malfunction is no longer present.
- A history DTC clears when the module ignition cycle counter reaches the reset threshold of 50, without a repeat of the malfunction.

Diagnostic Aids

- Sometimes, while diagnosing a specific customer concern or after a repair, you may notice a history U-code present. However, there is no associated "current" or "active" status. Loss-of- communication U-codes such as these can set for a variety of reasons. Many times, they are transparent to the vehicle operator and technician, and/or have no associated symptoms. Eventually, they will erase themselves automatically after a number of fault-free ignition cycles. This condition would most likely be attributed to one of these scenarios:
  - A control module on the data communication circuit was disconnected while the communication circuit is awake.
  - Power to one or more control modules was interrupted during diagnosis.
  - A low battery condition was present, so some control modules stop communicating when battery voltage drops below a certain threshold.
  - Battery power was restored to the vehicle and control modules on the communication circuit did not all re-initialise at the same time.
  - If a loss-of-communication U-code appears in history for no apparent reason, it is most likely associated with one of the scenarios above. These are all temporary conditions and should never be interpreted as an intermittent fault, causing you to replace a part.
- A control module may have a U-code stored in history that does not require any repairs. Issues with late or corrupted messages between control modules can be temporary with no apparent symptom or complaint; this does not mean the control module is faulty. Do not replace a control module based only on a history U-code.
- Do not replace a control module reporting a U-code. The U-code identifies which control module needs to be diagnosed for a communication issue.
- Communication may be available between the control module and the scan tool with one or more GMLAN serial data systems inoperative. This condition is due to the control module using multiple GMLAN busses.
- Use Data Link References to determine what GMLAN serial data communications the non communicating control module uses.
- The control module may not have internal protection for specific control circuits and may open a B+ or ignition fuse. If a fuse is open and the B+ or ignition circuit is not shorted to earth, ensure none of the control circuits are shorted to earth before replacing the non communicating control module.

Reference Information

Schematic Reference

- Data Communication Schematics
- Control Module References

Connector End View Reference

Component Connector End Views

Description and Operation

Data Link Communications Description and Operation

Electrical Information Reference

- Circuit Testing
- Connector Repairs
- Testing for Intermittent Conditions and Poor Connections
- Wiring Repairs

Scan Tool Reference

Control Module References for scan tool information

Circuit/System Verification

1. Verify that DTC U0198 is not set.
   If the DTC is set, refer to DTC U0100-U02FF .
2. Verify that DTC U0073, U0078, U1814, U2099, B1428, B1370, B1380, B1440, B1441, B1325 or P0562 is not set.
   If any of the DTCs are set, refer to Diagnostic Trouble Code (DTC) List - Vehicle .

Circuit/System Testing

Note: Use the schematic to identify the following:

- The control module location on low-speed GMLAN serial data circuits
- The control module B+, ignition, earth, serial data communication enable and serial data circuit terminals

1. Vehicle OFF, disconnect the harness connector at the K73 telematics communication interface control module.
2. Test for less than 10 Ω between each ground circuit terminal and ground.
   If greater than the specified range, test the ground circuit for an open/high resistance.
3. If equipped, vehicle in Service Mode, verify that a test lamp illuminates between each B+ circuit terminal and earth.
   If the test lamp does not illuminate, test the B+ circuit for a short to ground or an open/high resistance. If the circuit fuse is open, test the control circuits of the K73 telematics communication interface control module for a short-circuit to earth. If the circuits test normal, replace the K73 telematics communication interface control module.
4. If equipped, vehicle in Service Mode, verify that a test lamp illuminates between each ignition circuit terminal and earth.
   If the test lamp does not illuminate, test the ignition circuit for a short to ground or an open/high resistance. If the circuit fuse is open, test the control circuits of the K73 telematics communication interface control module for a short-circuit to earth. If the circuits test normal, replace the K73 telematics communication interface control module.
5. If equipped, vehicle in Service Mode, verify that a test lamp illuminates between the serial data communication enable circuit terminal and earth.
   If the test lamp does not illuminate, test the entire circuit, including the B+ circuit to the K9 body control module (BCM), for an open/high resistance or short to ground. If the circuits test normal, replace the K9 BCM.
6. Vehicle OFF, disconnect the harness connector at the control module setting the DTC.
7. Vehicle OFF, and all vehicle systems OFF, all keys at least 3 metres away from vehicle, all access doors closed. It may take up to 2 minutes for all vehicle systems to power down. Test for less than 2 Ω in the low-speed GMLAN serial data circuit between the K73 telematics communication interface control module and the control module setting the DTC.
   If greater than the specified range, test the serial data circuit for an open-circuit/high resistance between the K73 telematics communication interface control module and the control module setting the DTC.
8. If all circuits test normal, replace the K73 telematics communication interface control module.

Repair Instructions

Perform the Diagnostic Repair Verification after completing the diagnostic procedure.

- GMLAN Wiring Repairs
- Control Module References for control module replacement, programming and setup

&#169© Copyright Chevrolet. All rights reserved

DTC U1845 or U1846

Diagnostic Instructions

- Perform the Diagnostic System Check - Vehicle prior to using this diagnostic procedure.
- Review Strategy Based Diagnosis for an overview of the diagnostic approach.
- Diagnostic Procedure Instructions provides an overview of each diagnostic category.

DTC Descriptors

DTC U1845 00: Drive Motor Control Module 1 Lost Communication with Hybrid Powertrain Control Module

DTC U1846 00: Drive Motor Control Module 2 Lost Communication with Hybrid Powertrain Control Module

Circuit/System Description

The motor control modules and the hybrid powertrain control module 1 are all internal to the power inverter module. The motor control modules communicate only with the hybrid powertrain control module 1 with the hybrid powertrain control module 1 sending out diagnostic trouble code information to other control modules regarding the motor control modules. All circuits to the hybrid powertrain control module 1 and motor control modules are also internal to the power inverter module and replaced as a single component.

Communication diagnostics for the serial data, including control module power and earth, as well as the wake-up circuits for motor control modules and the hybrid powertrain control module 1, are all diagnosed from external sources only to the power inverter module connector because any circuit fault condition within the power inverter module will cause a complete replacement.

Conditions for Running the DTC

- The system voltage is more than 10 V.
- The vehicle power mode master requires serial data communication to occur from this specific module.

Conditions for Setting the DTC

A supervised periodic message that includes the transmitter module availability has not been received.

Action Taken When the DTC Sets

The control module is never signalled. Therefore, the specific subsystems will not function.

Conditions for Clearing the DTC

- A current DTC clears when the malfunction is no longer present.
- A history DTC clears when the module ignition cycle counter reaches the reset threshold of 50, without a repeat of the malfunction.

Diagnostic Aids

- Sometimes, while diagnosing a specific customer concern or after a repair, you may notice a history U-code present. However, there is no associated "current" or "active" status. Loss-of- communication U-codes such as these can set for a variety of reasons. Many times, they are transparent to the vehicle operator and technician, and/or have no associated symptoms. Eventually, they will erase themselves automatically after a number of fault-free ignition cycles. This condition would most likely be attributed to one of these scenarios:
  - A control module on the data communication circuit was disconnected while the communication circuit is awake.
  - Power to one or more control modules was interrupted during diagnosis.
  - A low battery condition was present, so some control modules stop communicating when battery voltage drops below a certain threshold.
  - Battery power was restored to the vehicle and control modules on the communication circuit did not all re-initialise at the same time.
  - If a loss-of-communication U-code appears in history for no apparent reason, it is most likely associated with one of the scenarios above. These are all temporary conditions and should never be interpreted as an intermittent fault, causing you to replace a part.
- A control module may have a U-code stored in history that does not require any repairs. Issues with late or corrupted messages between control modules can be temporary with no apparent symptom or complaint; this does not mean the control module is faulty. Do not replace a control module based only on a history U-code.
- The control module may not have internal protection for specific control circuits and may open a B+ or ignition fuse. If a fuse is open and the B+ or ignition circuit is not shorted to earth, ensure none of the control circuits are shorted to earth before replacing the non communicating control module.
- If DTC U1845 or U1846 is only set current in the hybrid powertrain control module 1, the power inverter module must be replaced due to all circuits between the hybrid powertrain control module 1 and motor control modules being internal to the power inverter module.

Reference Information

Schematic Reference

- Data Communication Schematics
- Control Module References

Connector End View Reference

Component Connector End Views

Description and Operation

Data Link Communications Description and Operation

Electrical Information Reference

- Circuit Testing
- Connector Repairs
- Testing for Intermittent Conditions and Poor Connections
- Wiring Repairs

Scan Tool Reference

Control Module References for scan tool information

Circuit/System Verification

1. Verify that DTC U0293 is not set.
   If the DTC is set, refer to DTC U0100-U02FF .
2. Verify that DTC U1845 or U1846 is not set current only in the hybrid powertrain control module 1.
   If any of the DTCs are set current in the hybrid powertrain control module 1 only, replace the T6 power inverter module.

Repair Instructions

Perform the Diagnostic Repair Verification after completing the diagnostic procedure.

- GMLAN Wiring Repairs
- Control Module References for control module replacement, programming and setup

&#169© Copyright Chevrolet. All rights reserved

DTC U1849

Diagnostic Instructions

- Perform the Diagnostic System Check - Vehicle prior to using this diagnostic procedure.
- Review Strategy Based Diagnosis for an overview of the diagnostic approach.
- Diagnostic Procedure Instructions provides an overview of each diagnostic category.

DTC Descriptor

DTC U1849 00: Drive Motor Control Module 1 Lost Communication with Transmission Control Module

Diagnostic Fault Information

Circuit	Short to Ground	Open/High Resistance	Short to Voltage	Signal Performance
B+	U1849*	U1849*	--	--
Ignition	U1839*	U1849*	--	--
Accessory Wake Up Serial Data 2	P06E4*	U1849*	--	--
High Speed GMLAN Serial Data (+)	U0073, 1	U0073, U1849*	U0073, 1	--
High Speed GMLAN Serial Data (-)	U0073, 1	U0073, U1849*	U0073, 1	--
Ground	--	U1849*	--	--
* Other modules/DTCs may set with this fault. 1. Scan Tool Does Not Communicate With High-Speed GMLAN Device.				

Circuit/System Description

Control modules connected to the serial data circuits monitor for serial data communications during normal vehicle operation. Operating information and commands are exchanged among the control modules. The control modules have prerecorded information about what messages are needed to be exchanged on the serial data circuits, for each virtual network. The messages are supervised and also, some periodic messages are used by the receiver module as an availability indication of the transmitter module. Each message contains the identification number of the transmitter module.

Conditions for Running the DTC

- The system voltage is at least 10 V.
- The vehicle power mode master requires serial data communication to occur from this specific control module.

Conditions for Setting the DTC

A supervised periodic message that includes the transmitter module availability has not been received.

Action Taken When the DTC Sets

The DTC U1849 is a type B DTC.

Conditions for Clearing the DTC

The DTC U1849 is a type B DTC.

Diagnostic Aids

- Sometimes, while diagnosing a specific customer concern or after a repair, you may notice a history U-code present. However, there is no associated "current" or "active" status. Loss-of- communication U-codes such as these can set for a variety of reasons. Many times, they are transparent to the vehicle operator and technician, and/or have no associated symptoms. Eventually, they will erase themselves automatically after a number of fault-free ignition cycles. This condition would most likely be attributed to one of these scenarios:
  - A control module on the data communication circuit was disconnected while the communication circuit is awake.
  - Power to one or more control modules was interrupted during diagnosis.
  - A low battery condition was present, so some control modules stop communicating when battery voltage drops below a certain threshold.
  - Battery power was restored to the vehicle and control modules on the communication circuit did not all re-initialise at the same time.
  - If a loss-of-communication U-code appears in history for no apparent reason, it is most likely associated with one of the scenarios above. These are all temporary conditions and should never be interpreted as an intermittent fault, causing you to replace a part.
- A control module may have a U-code stored in history that does not require any repairs. Issues with late or corrupted messages between control modules can be temporary with no apparent symptom or complaint; this does not mean the control module is faulty. Do not replace a control module based only on a history U-code.
- Do not replace a control module reporting a U-code. The U-code identifies which control module needs to be diagnosed for a communication issue.
- Communication may be available between the control module and the scan tool with one or more GMLAN serial data systems inoperative. This condition is due to the control module using multiple GMLAN busses.
- Use Data Link References to determine what GMLAN serial data communications the non communicating control module uses.
- The control module may not have internal protection for specific control circuits and may open a B+ or ignition fuse. If a fuse is open and the B+ or ignition circuit is not shorted to earth, ensure none of the control circuits are shorted to earth before replacing the non communicating control module.

Reference Information

Schematic Reference

- Data Communication Schematics
- Control Module References

Connector End View Reference

Component Connector End Views

Description and Operation

Data Link Communications Description and Operation

Electrical Information Reference

- Circuit Testing
- Connector Repairs
- Testing for Intermittent Conditions and Poor Connections
- Wiring Repairs

Scan Tool Reference

Control Module References for scan tool information

Circuit/System Verification

1. Verify that DTC U0101 is not set.
   If the DTC is set, refer to DTC U0100-U02FF .
2. Verify that DTC U0073, P06E4, U1814, U2099, B1428, B1370, B1380, B1440, B1441, B1325, or P0562 is not set.
   If any of the DTCs are set, refer to Diagnostic Trouble Code (DTC) List - Vehicle .

Circuit/System Testing

Note: Use the schematic to identify the following:

- Control module location on the high-speed GMLAN serial data circuits
- The control module B+, ignition, earth, accessory wake-up serial data 2 and serial data circuit terminals

1. Vehicle OFF, disconnect harness connector at the K71 transmission control module (TCM).
2. Test for less than 10 Ω between each ground circuit terminal and ground.
   If greater than the specified value, test the ground circuit for an open/high resistance.
3. If equipped, vehicle in Service Mode, verify that a test lamp illuminates between each B+ circuit terminal and earth.
   If the test lamp does not illuminate, test the B+ circuit for a short to ground or an open/high resistance. If the circuit fuse is open, test the control circuits of the K71 TCM for a short-circuit to earth. If the circuits test normal, replace the K71 TCM.
4. If equipped, vehicle in Service Mode, verify that a test lamp illuminates between each ignition circuit terminal and earth.
   If the test lamp does not illuminate, test the ignition circuit for a short to ground or an open/high resistance. If the circuit fuse is open, test the control circuits of the K71 TCM for a short-circuit to earth. If the circuits test normal, replace the K71 TCM.
5. If equipped, vehicle in Service Mode, verify that a test lamp illuminates between the accessory wake-up serial data 2 circuit terminal and earth.
   If the test lamp does not illuminate, test the entire circuit, including the B+ circuit to the K114B hybrid powertrain control module 2, for an open-circuit/high resistance or short-circuit to earth. If the circuits test normal, replace the K114B hybrid powertrain control module 2.
6. Vehicle OFF, disconnect the harness connector at the T6 power inverter module.
7. Vehicle OFF, and all vehicle systems OFF, all keys at least 3 metres away from vehicle, all access doors closed. It may take up to 2 minutes for all vehicle systems to power down. Test for less than 2 Ω in each high-speed GMLAN serial data circuit between the K71 TCM and the T6 power inverter module.
   If greater than the specified range, test the serial data circuit for an open-circuit/high resistance between the K71 TCM and the T6 power inverter module.
8. If all circuits test normal, replace the K71 TCM.

Repair Instructions

Perform the Diagnostic Repair Verification after completing the diagnostic procedure.

- GMLAN Wiring Repairs
- Control Module References for control module replacement, programming and setup

&#169© Copyright Chevrolet. All rights reserved

DTC U184A

Diagnostic Instructions

- Perform the Diagnostic System Check - Vehicle prior to using this diagnostic procedure.
- Review Strategy Based Diagnosis for an overview of the diagnostic approach.
- Diagnostic Procedure Instructions provides an overview of each diagnostic category.

DTC Descriptor

DTC U184A 00: Lost Communication with Body Control Module on Low-Speed Communication Bus

Diagnostic Fault Information

Circuit	Short to Ground	Open/High Resistance	Short to Voltage	Signal Performance
B+	U184A	U184A	--	--
Ignition	U184A	U184A	--	--
Low Speed GMLAN Serial Data	U0078*	U0078, U184A	U0078*	--
Ground	--	U184A	--	--
* Scan Tool Does Not Communicate With Low-Speed GMLAN Device				

Circuit/System Description

The serial data circuit is the means by which the control modules in the vehicle communicate with each other. Once the scan tool is connected to the serial data circuit through the data link connector (DLC), the scan tool can be used to monitor each control module for diagnostic purposes and to check for diagnostic trouble codes (DTCs). When the vehicle is ON, each control module communicating on the serial data circuit sends a state of health message to ensure that the control module is operating properly. When a control module stops communicating on the serial data circuit, for example if the control module loses power or ground, the state of health message it normally sends on the serial data circuit disappears. Other control modules on the serial data circuit, which expect to receive that state of health message, detect its absence; those control modules in turn set a DTC associated with the loss of state of health of the non communicating control module. A loss of serial data communications DTC does not represent a failure of the control modules that contain the stored code.

Conditions for Running the DTC

The system voltage is between 9–16 V.

Conditions for Setting the DTC

A supervised periodic message that includes the transmitter module availability has not been received.

Action Taken When the DTC Sets

The control module is never signalled. Therefore, the specific subsystems will not function.

Conditions for Clearing the DTC

- A current DTC clears when the malfunction is no longer present.
- A history DTC clears when the module ignition cycle counter reaches the reset threshold of 50, without a repeat of the malfunction.

Diagnostic Aids

- Sometimes, while diagnosing a specific customer concern or after a repair, you may notice a history U-code present. However, there is no associated "current" or "active" status. Loss-of- communication U-codes such as these can set for a variety of reasons. Many times, they are transparent to the vehicle operator and technician, and/or have no associated symptoms. Eventually, they will erase themselves automatically after a number of fault-free ignition cycles. This condition would most likely be attributed to one of these scenarios:
  - A control module on the data communication circuit was disconnected while the communication circuit is awake.
  - Power to one or more control modules was interrupted during diagnosis.
  - A low battery condition was present, so some control modules stop communicating when battery voltage drops below a certain threshold.
  - Battery power was restored to the vehicle and control modules on the communication circuit did not all re-initialise at the same time.
  - If a loss-of-communication U-code appears in history for no apparent reason, it is most likely associated with one of the scenarios above. These are all temporary conditions and should never be interpreted as an intermittent fault, causing you to replace a part.
- A control module may have a U-code stored in history that does not require any repairs. Issues with late or corrupted messages between control modules can be temporary with no apparent symptom or complaint; this does not mean the control module is faulty. Do not replace a control module based only on a history U-code.
- Do not replace a control module reporting a U-code. The U-code identifies which control module needs to be diagnosed for a communication issue.
- Communication may be available between the control module and the scan tool with one or more GMLAN serial data systems inoperative. This condition is due to the control module using multiple GMLAN busses.
- Use Data Link References Data Link References to determine what GMLAN serial data communications the non communicating control module uses.
- The control module may not have internal protection for specific control circuits and may open a B+ or ignition fuse. If a fuse is open and the B+ or ignition circuit is not shorted to earth, ensure none of the control circuits are shorted to earth before replacing the non communicating control module.

Reference Information

Schematic Reference

- Data Communication Schematics
- Control Module References

Connector End View Reference

Component Connector End Views

Description and Operation

Data Link Communications Description and Operation

Electrical Information Reference

- Circuit Testing
- Connector Repairs
- Testing for Intermittent Conditions and Poor Connections
- Wiring Repairs

Scan Tool Reference

Control Module References for scan tool information

Circuit/System Verification

1. Verify that DTC U0140 is not set.
   If the DTC is set, refer to DTC U0100-U02FF .
2. Verify that DTC U0073, U0078, B1428, B1370, B1380, B1440, B1441, B1325 or P0562 is not set.
   If any of the DTCs are set, refer to Diagnostic Trouble Code (DTC) List - Vehicle .

Circuit/System Testing

Note: Use the schematic to identify the following:

- The control module location on low-speed GMLAN serial data circuits
- The control module B+, ignition, earth and serial data circuit terminals

1. Vehicle OFF, disconnect the harness connector at the K9 body control module (BCM).
2. Test for less than 10 Ω between each ground circuit terminal and ground.
   If greater than the specified range, test the ground circuit for an open/high resistance.
3. If equipped, vehicle in Service Mode, verify that a test lamp illuminates between each B+ circuit terminal and earth.
   If the test lamp does not illuminate, test the B+ circuit for a short to ground or an open/high resistance. If the circuit fuse is open, test the control circuits of the K9 BCM for a short-circuit to earth. If the circuits test normal, replace the K9 BCM.
4. If equipped, vehicle in Service Mode, verify that a test lamp illuminates between each ignition circuit terminal and earth.
   If the test lamp does not illuminate, test the ignition circuit for a short to ground or an open/high resistance. If the circuit fuse is open, test the control circuits of the K9 BCM for a short-circuit to earth. If the circuits test normal, replace the K9 BCM.
5. Vehicle OFF, disconnect the harness connector at the control module setting the DTC.
6. Vehicle OFF, and all vehicle systems OFF, all keys at least 3 metres away from vehicle, all access doors closed. It may take up to 2 minutes for all vehicle systems to power down. Test for less than 2 Ω in the low-speed GMLAN serial data circuit between the K9 BCM and the control module setting the DTC.
   If greater than the specified range, test the serial data circuit for an open-circuit/high resistance between the K9 BCM and the control module setting the DTC.
7. If all circuits test normal, replace the K9 BCM.

Repair Instructions

Perform the Diagnostic Repair Verification after completing the diagnostic procedure.

- GMLAN Wiring Repairs
- Control Module References for control module replacement, programming and setup

&#169© Copyright Chevrolet. All rights reserved

DTC U184B

Diagnostic Instructions

- Perform the Diagnostic System Check - Vehicle prior to using this diagnostic procedure.
- Review Strategy Based Diagnosis for an overview of the diagnostic approach.
- Diagnostic Procedure Instructions provides an overview of each diagnostic category.

DTC Descriptor

DTC U184B 00: Lost Communication with Electronic Climate Control Module on Low Speed Communication Bus

Diagnostic Fault Information

Circuit	Short to Ground	Open/High Resistance	Short to Voltage	Signal Performance
B+	U184B	U0164, U184B	--	--
Ignition	U184B	U0164, U184B	--	--
Low Speed GMLAN Serial Data	U0078*	U0078, U0164, U184B	U0078*	--
Ground	--	U0164, U184B	--	--
* Scan Tool Does Not Communicate With Low-Speed GMLAN Device				

Circuit/System Description

The serial data circuit is the means by which the control modules in the vehicle communicate with each other. Once the scan tool is connected to the serial data circuit through the data link connector (DLC), the scan tool can be used to monitor each control module for diagnostic purposes and to check for diagnostic trouble codes (DTCs). When the vehicle is ON, each control module communicating on the serial data circuit sends a state of health (SOH) message to ensure that the control module is operating properly. When a control module stops communicating on the serial data circuit, for example if the control module loses power or ground, the SOH message it normally sends on the serial data circuit disappears. Other control modules on the serial data circuit, which expect to receive that SOH message, detect its absence; those control modules in turn set a DTC associated with the loss of SOH of the non communicating control module. A loss of serial data communications DTC does not represent a failure of the control modules that contain the stored code.

Conditions for Running the DTC

The system voltage is between 9–16 V.

Conditions for Setting the DTC

A supervised periodic message that includes the transmitter module availability has not been received.

Action Taken When the DTC Sets

The control module is never signalled. Therefore, the specific subsystems will not function.

Conditions for Clearing the DTC

- A current DTC clears when the malfunction is no longer present.
- A history DTC clears when the module ignition cycle counter reaches the reset threshold of 50, without a repeat of the malfunction.

Diagnostic Aids

- Sometimes, while diagnosing a specific customer concern or after a repair, you may notice a history U-code present. However, there is no associated "current" or "active" status. Loss-of- communication U-codes such as these can set for a variety of reasons. Many times, they are transparent to the vehicle operator and technician, and/or have no associated symptoms. Eventually, they will erase themselves automatically after a number of fault-free ignition cycles. This condition would most likely be attributed to one of these scenarios:
  - A control module on the data communication circuit was disconnected while the communication circuit is awake.
  - Power to one or more control modules was interrupted during diagnosis.
  - A low battery condition was present, so some control modules stop communicating when battery voltage drops below a certain threshold.
  - Battery power was restored to the vehicle and control modules on the communication circuit did not all re-initialise at the same time.
  - If a loss-of-communication U-code appears in history for no apparent reason, it is most likely associated with one of the scenarios above. These are all temporary conditions and should never be interpreted as an intermittent fault, causing you to replace a part.
- A control module may have a U-code stored in history that does not require any repairs. Issues with late or corrupted messages between control modules can be temporary with no apparent symptom or complaint; this does not mean the control module is faulty. Do not replace a control module based only on a history U-code.
- Do not replace a control module reporting a U-code. The U-code identifies which control module needs to be diagnosed for a communication issue.
- Communication may be available between the control module and the scan tool with one or more GMLAN serial data systems inoperative. This condition is due to the control module using multiple GMLAN busses.
- Use Data Link References to determine what GMLAN serial data communications the non communicating control module uses.
- The control module may not have internal protection for specific control circuits and may open a B+ or ignition fuse. If a fuse is open and the B+ or ignition circuit is not shorted to earth, ensure none of the control circuits are shorted to earth before replacing the non communicating control module.

Reference Information

Schematic Reference

- Data Communication Schematics
- Control Module References

Connector End View Reference

Component Connector End Views

Description and Operation

Data Link Communications Description and Operation

Electrical Information Reference

- Circuit Testing
- Connector Repairs
- Testing for Intermittent Conditions and Poor Connections
- Wiring Repairs

Scan Tool Reference

Control Module References for scan tool information

Circuit/System Verification

1. Verify that DTC U0164 is not set.
   If the DTC is set, refer to DTC U0100-U02FF .
2. Verify that DTC U0073, U0078, B1428, B1370, B1380, B1440, B1441, B1325 or P0562 is not set.
   If any of the DTCs are set, refer to Diagnostic Trouble Code (DTC) List - Vehicle .

Circuit/System Testing

Note: Use the schematic to identify the following:

- The control module location on low-speed GMLAN serial data circuits
- The control module B+, ignition, earth and serial data circuit terminals

1. Vehicle OFF, disconnect the harness connector at the K33 HVAC control module.
2. Test for less than 10 Ω between each ground circuit terminal and ground.
   If greater than the specified range, test the ground circuit for an open/high resistance.
3. If equipped, vehicle in Service Mode, verify that a test lamp illuminates between each B+ circuit terminal and earth.
   If the test lamp does not illuminate, test the B+ circuit for a short to ground or an open/high resistance. If the circuit fuse is open, test the control circuits of the K33 HVAC control module for a short-circuit to earth. If the circuits test normal, replace the K33 HVAC control module.
4. If equipped, vehicle in Service Mode, verify that a test lamp illuminates between each ignition circuit terminal and earth.
   If the test lamp does not illuminate, test the ignition circuit for a short to ground or an open/high resistance. If the circuit fuse is open, test the control circuits of the K33 HVAC control module for a short-circuit to earth. If the circuits test normal, replace the K33 HVAC control module.
5. Vehicle OFF, disconnect the harness connector at the control module setting the DTC.
6. Vehicle OFF, and all vehicle systems OFF, all keys at least 3 metres away from vehicle, all access doors closed. It may take up to 2 minutes for all vehicle systems to power down. Test for less than 2 Ω in the low-speed GMLAN serial data circuit between the K33 HVAC control module and the control module setting the DTC.
   If greater than the specified range, test the serial data circuit for an open-circuit/high resistance between the K33 HVAC control module and the control module setting the DTC.
7. If all circuits test normal, replace the K33 HVAC control module.

Repair Instructions

Perform the Diagnostic Repair Verification after completing the diagnostic procedure.

- GMLAN Wiring Repairs
- Control Module References for control module replacement, programming and setup

&#169© Copyright Chevrolet. All rights reserved

DTC U184C

Diagnostic Instructions

- Perform the Diagnostic System Check - Vehicle prior to using this diagnostic procedure.
- Review Strategy Based Diagnosis for an overview of the diagnostic approach.
- Diagnostic Procedure Instructions provides an overview of each diagnostic category.

DTC Descriptor

DTC U184C 00: Lost Communication with Instrument Cluster on Low Speed Communication Bus

Diagnostic Fault Information

Circuit	Short to Ground	Open/High Resistance	Short to Voltage	Signal Performance
B+	U184C	U184C	--	--
Ignition	U184C	U184C	--	--
Low Speed GMLAN Serial Data	U0078*	U0078, U184C	U0078*	--
Ground	--	U184C	--	--
* Scan Tool Does Not Communicate With Low-Speed GMLAN Device				

Circuit/System Description

The serial data circuit is the means by which the control modules in the vehicle communicate with each other. Once the scan tool is connected to the serial data circuit through the data link connector (DLC), the scan tool can be used to monitor each control module for diagnostic purposes and to check for diagnostic trouble codes (DTCs). When the vehicle is ON, each control module communicating on the serial data circuit sends a state of health (SOH) message to ensure that the control module is operating properly. When a control module stops communicating on the serial data circuit, for example if the control module loses power or ground, the SOH message it normally sends on the serial data circuit disappears. Other control modules on the serial data circuit, which expect to receive that SOH message, detect its absence; those control modules in turn set a DTC associated with the loss of SOH of the non communicating control module. A loss of serial data communications DTC does not represent a failure of the control modules that contain the stored code.

Conditions for Running the DTC

The system voltage is between 9–16 V.

Conditions for Setting the DTC

A supervised periodic message that includes the transmitter module availability has not been received.

Action Taken When the DTC Sets

The control module is never signalled. Therefore, the specific subsystems will not function.

Conditions for Clearing the DTC

- A current DTC clears when the malfunction is no longer present.
- A history DTC clears when the module ignition cycle counter reaches the reset threshold of 50, without a repeat of the malfunction.

Diagnostic Aids

- Sometimes, while diagnosing a specific customer concern or after a repair, you may notice a history U-code present. However, there is no associated "current" or "active" status. Loss-of- communication U-codes such as these can set for a variety of reasons. Many times, they are transparent to the vehicle operator and technician, and/or have no associated symptoms. Eventually, they will erase themselves automatically after a number of fault-free ignition cycles. This condition would most likely be attributed to one of these scenarios:
  - A control module on the data communication circuit was disconnected while the communication circuit is awake.
  - Power to one or more control modules was interrupted during diagnosis.
  - A low battery condition was present, so some control modules stop communicating when battery voltage drops below a certain threshold.
  - Battery power was restored to the vehicle and control modules on the communication circuit did not all re-initialise at the same time.
  - If a loss-of-communication U-code appears in history for no apparent reason, it is most likely associated with one of the scenarios above. These are all temporary conditions and should never be interpreted as an intermittent fault, causing you to replace a part.
- A control module may have a U-code stored in history that does not require any repairs. Issues with late or corrupted messages between control modules can be temporary with no apparent symptom or complaint; this does not mean the control module is faulty. Do not replace a control module based only on a history U-code.
- Do not replace a control module reporting a U-code. The U-code identifies which control module needs to be diagnosed for a communication issue.
- Communication may be available between the control module and the scan tool with one or more GMLAN serial data systems inoperative. This condition is due to the control module using multiple GMLAN busses.
- Use Data Link References to determine what GMLAN serial data communications the non communicating control module uses.
- The control module may not have internal protection for specific control circuits and may open a B+ or ignition fuse. If a fuse is open and the B+ or ignition circuit is not shorted to earth, ensure none of the control circuits are shorted to earth before replacing the non communicating control module.

Reference Information

Schematic Reference

- Data Communication Schematics
- Control Module References

Connector End View Reference

Component Connector End Views

Description and Operation

Data Link Communications Description and Operation

Electrical Information Reference

- Circuit Testing
- Connector Repairs
- Testing for Intermittent Conditions and Poor Connections
- Wiring Repairs

Scan Tool Reference

Control Module References for scan tool information

Circuit/System Verification

1. Verify that DTC U0155 is not set.
   If the DTC is set, refer to DTC U0100-U02FF .
2. Verify that DTC U0073, U0078, B1428, B1370, B1380, B1440, B1441, B1325 or P0562 is not set.
   If any of the DTCs are set, refer to Diagnostic Trouble Code (DTC) List - Vehicle .

Circuit/System Testing

Note: Use the schematic to identify the following:

- The control module location on low-speed GMLAN serial data circuits
- The control module B+, ignition, earth and serial data circuit terminals

1. Vehicle OFF, disconnect the harness connector at the P16 instrument cluster.
2. Test for less than 10 Ω between each ground circuit terminal and ground.
   If greater than the specified range, test the ground circuit for an open/high resistance.
3. If equipped, vehicle in Service Mode, verify that a test lamp illuminates between each B+ circuit terminal and earth.
   If the test lamp does not illuminate, test the B+ circuit for a short to ground or an open/high resistance. If the circuit fuse is open, test the control circuits of the P16 instrument cluster for a short-circuit to earth. If the circuits test normal, replace the P16 instrument cluster.
4. If equipped, vehicle in Service Mode, verify that a test lamp illuminates between each ignition circuit terminal and earth.
   If the test lamp does not illuminate, test the ignition circuit for a short to ground or an open/high resistance. If the circuit fuse is open, test the control circuits of the P16 instrument cluster for a short-circuit to earth. If the circuits test normal, replace the P16 instrument cluster.
5. Vehicle OFF, disconnect the harness connector at the control module setting the DTC.
6. Vehicle OFF, and all vehicle systems OFF, all keys at least 3 metres away from vehicle, all access doors closed. It may take up to 2 minutes for all vehicle systems to power down. Test for less than 2 Ω in the low-speed GMLAN serial data circuit between the P16 instrument cluster and the control module setting the DTC.
   If greater than the specified range, test the serial data circuit for an open-circuit/high resistance between the P16 instrument cluster and the control module setting the DTC.
7. If all circuits test normal, replace the P16 instrument cluster.

Repair Instructions

Perform the Diagnostic Repair Verification after completing the diagnostic procedure.

- GMLAN Wiring Repairs
- Control Module References for control module replacement, programming and setup

&#169© Copyright Chevrolet. All rights reserved

DTC U184D

Diagnostic Instructions

- Perform the Diagnostic System Check - Vehicle prior to using this diagnostic procedure.
- Review Strategy Based Diagnosis for an overview of the diagnostic approach.
- Diagnostic Procedure Instructions provides an overview of each diagnostic category.

DTC Descriptor

DTC U184D 00: Lost Communication with Radio on Low Speed Communication Bus

Diagnostic Fault Information

Circuit	Short to Ground	Open/High Resistance	Short to Voltage	Signal Performance
B+	U184D	U184D	--	--
Ignition	U184D	U184D	--	--
Low Speed GMLAN Serial Data	U0078*	U0078, U184D	U0078*	--
Ground	--	U184D	--	--
* Scan Tool Does Not Communicate With Low-Speed GMLAN Device				

Circuit/System Description

The serial data circuit is the means by which the control modules in the vehicle communicate with each other. Once the scan tool is connected to the serial data circuit through the data link connector (DLC), the scan tool can be used to monitor each control module for diagnostic purposes and to check for diagnostic trouble codes (DTCs). When the vehicle is ON, each control module communicating on the serial data circuit sends a state of health message to ensure that the control module is operating properly. When a control module stops communicating on the serial data circuit, for example if the control module loses power or ground, the state of health message it normally sends on the serial data circuit disappears. Other control modules on the serial data circuit, which expect to receive that state of health message, detect its absence; those control modules in turn set a DTC associated with the loss of state of health of the non communicating control module. A loss of serial data communications DTC does not represent a failure of the control modules that contain the stored code.

Conditions for Running the DTC

The system voltage is between 9–16 V.

Conditions for Setting the DTC

A supervised periodic message that includes the transmitter module availability has not been received.

Action Taken When the DTC Sets

The control module is never signalled. Therefore, the specific subsystems will not function.

Conditions for Clearing the DTC

- A current DTC clears when the malfunction is no longer present.
- A history DTC clears when the module ignition cycle counter reaches the reset threshold of 50, without a repeat of the malfunction.

Diagnostic Aids

- Sometimes, while diagnosing a specific customer concern or after a repair, you may notice a history U-code present. However, there is no associated "current" or "active" status. Loss-of- communication U-codes such as these can set for a variety of reasons. Many times, they are transparent to the vehicle operator and technician, and/or have no associated symptoms. Eventually, they will erase themselves automatically after a number of fault-free ignition cycles. This condition would most likely be attributed to one of these scenarios:
  - A control module on the data communication circuit was disconnected while the communication circuit is awake.
  - Power to one or more control modules was interrupted during diagnosis.
  - A low battery condition was present, so some control modules stop communicating when battery voltage drops below a certain threshold.
  - Battery power was restored to the vehicle and control modules on the communication circuit did not all re-initialise at the same time.
  - If a loss-of-communication U-code appears in history for no apparent reason, it is most likely associated with one of the scenarios above. These are all temporary conditions and should never be interpreted as an intermittent fault, causing you to replace a part.
- A control module may have a U-code stored in history that does not require any repairs. Issues with late or corrupted messages between control modules can be temporary with no apparent symptom or complaint; this does not mean the control module is faulty. Do not replace a control module based only on a history U-code.
- Do not replace a control module reporting a U-code. The U-code identifies which control module needs to be diagnosed for a communication issue.
- Communication may be available between the control module and the scan tool with one or more GMLAN serial data systems inoperative. This condition is due to the control module using multiple GMLAN busses.
- Use Data Link References Data Link References to determine what GMLAN serial data communications the non communicating control module uses.
- The control module may not have internal protection for specific control circuits and may open a B+ or ignition fuse. If a fuse is open and the B+ or ignition circuit is not shorted to earth, ensure none of the control circuits are shorted to earth before replacing the non communicating control module.

Reference Information

Schematic Reference

- Data Communication Schematics
- Control Module References

Connector End View Reference

Component Connector End Views

Description and Operation

Data Link Communications Description and Operation

Electrical Information Reference

- Circuit Testing
- Connector Repairs
- Testing for Intermittent Conditions and Poor Connections
- Wiring Repairs

Scan Tool Reference

Control Module References for scan tool information

Circuit/System Verification

1. Verify that DTC U0184 is not set.
   If the DTC is set, refer to DTC U0100-U02FF .
2. Verify that DTC U0073, U0078, B1428, B1370, B1380, B1440, B1441, B1325 or P0562 is not set.
   If any of the DTCs are set, refer to Diagnostic Trouble Code (DTC) List - Vehicle .

Circuit/System Testing

Note: Use the schematic to identify the following:

- The control module location on low-speed GMLAN serial data circuits
- The control module B+, ignition, earth and serial data circuit terminals

1. Vehicle OFF, disconnect the harness connector at the A11 radio.
2. Test for less than 10 Ω between each ground circuit terminal and ground.
   If greater than the specified range, test the ground circuit for an open/high resistance.
3. If equipped, vehicle in Service Mode, verify that a test lamp illuminates between each B+ circuit terminal and earth.
   If the test lamp does not illuminate, test the B+ circuit for a short to ground or an open/high resistance. If the circuit fuse is open, test the control circuits of the A11 radio for a short-circuit to earth. If the circuits test normal, replace the A11 radio.
4. If equipped, vehicle in Service Mode, verify that a test lamp illuminates between each ignition circuit terminal and earth.
   If the test lamp does not illuminate, test the ignition circuit for a short to ground or an open/high resistance. If the circuit fuse is open, test the control circuits of the A11 radio for a short-circuit to earth. If the circuits test normal, replace the A11 radio.
5. Vehicle OFF, disconnect the harness connector at the control module setting the DTC.
6. Vehicle OFF, and all vehicle systems OFF, all keys at least 3 metres away from vehicle, all access doors closed. It may take up to 2 minutes for all vehicle systems to power down. Test for less than 2 Ω in the low-speed GMLAN serial data circuit between the A11 radio and the control module setting the DTC.
   If greater than the specified range, test the serial data circuit for an open-circuit/high resistance between the A11 radio and the control module setting the DTC.
7. If all circuits test normal, replace the A11 radio.

Repair Instructions

Perform the Diagnostic Repair Verification after completing the diagnostic procedure.

- GMLAN Wiring Repairs
- Control Module References for control module replacement, programming and setup

&#169© Copyright Chevrolet. All rights reserved

DTC U184E

Diagnostic Instructions

- Perform the Diagnostic System Check - Vehicle prior to using this diagnostic procedure.
- Review Strategy Based Diagnosis for an overview of the diagnostic approach.
- Diagnostic Procedure Instructions provides an overview of each diagnostic category.

DTC Descriptor

DTC U184E 00: Lost Communication with Inflatable Restraint Sensing and Diagnostic Module on Low Speed Communication Bus

Diagnostic Fault Information

Circuit	Short to Ground	Open/High Resistance	Short to Voltage	Signal Performance
B+	U184E	U184E	--	--
Ignition	U184E	U184E	--	--
Low Speed GMLAN Serial Data	U0078*	U0078, U184E	U0078*	--
Ground	--	U184E	--	--
* Scan Tool Does Not Communicate With Low-Speed GMLAN Device				

Circuit/System Description

The serial data circuit is the means by which the control modules in the vehicle communicate with each other. Once the scan tool is connected to the serial data circuit through the data link connector (DLC), the scan tool can be used to monitor each control module for diagnostic purposes and to check for diagnostic trouble codes (DTCs). When the vehicle is ON, each control module communicating on the serial data circuit sends a state of health message to ensure that the control module is operating properly. When a control module stops communicating on the serial data circuit, for example if the control module loses power or ground, the state of health message it normally sends on the serial data circuit disappears. Other control modules on the serial data circuit, which expect to receive that state of health message, detect its absence; those control modules in turn set a DTC associated with the loss of state of health of the non communicating control module. A loss of serial data communications DTC does not represent a failure of the control modules that contain the stored code.

Conditions for Running the DTC

The system voltage is between 9–16 V.

Conditions for Setting the DTC

A supervised periodic message that includes the transmitter module availability has not been received.

Action Taken When the DTC Sets

The control module is never signalled. Therefore, the specific subsystems will not function.

Conditions for Clearing the DTC

- A current DTC clears when the malfunction is no longer present.
- A history DTC clears when the module ignition cycle counter reaches the reset threshold of 50, without a repeat of the malfunction.

Diagnostic Aids

- Sometimes, while diagnosing a specific customer concern or after a repair, you may notice a history U-code present. However, there is no associated "current" or "active" status. Loss-of- communication U-codes such as these can set for a variety of reasons. Many times, they are transparent to the vehicle operator and technician, and/or have no associated symptoms. Eventually, they will erase themselves automatically after a number of fault-free ignition cycles. This condition would most likely be attributed to one of these scenarios:
  - A control module on the data communication circuit was disconnected while the communication circuit is awake.
  - Power to one or more control modules was interrupted during diagnosis.
  - A low battery condition was present, so some control modules stop communicating when battery voltage drops below a certain threshold.
  - Battery power was restored to the vehicle and control modules on the communication circuit did not all re-initialise at the same time.
  - If a loss-of-communication U-code appears in history for no apparent reason, it is most likely associated with one of the scenarios above. These are all temporary conditions and should never be interpreted as an intermittent fault, causing you to replace a part.
- A control module may have a U-code stored in history that does not require any repairs. Issues with late or corrupted messages between control modules can be temporary with no apparent symptom or complaint; this does not mean the control module is faulty. Do not replace a control module based only on a history U-code.
- Do not replace a control module reporting a U-code. The U-code identifies which control module needs to be diagnosed for a communication issue.
- Communication may be available between the control module and the scan tool with one or more GMLAN serial data systems inoperative. This condition is due to the control module using multiple GMLAN busses.
- Use Data Link References Data Link References to determine what GMLAN serial data communications the non communicating control module uses.
- The control module may not have internal protection for specific control circuits and may open a B+ or ignition fuse. If a fuse is open and the B+ or ignition circuit is not shorted to earth, ensure none of the control circuits are shorted to earth before replacing the non communicating control module.

Reference Information

Schematic Reference

- Data Communication Schematics
- Control Module References

Connector End View Reference

Component Connector End Views

Description and Operation

Data Link Communications Description and Operation

Electrical Information Reference

- Circuit Testing
- Connector Repairs
- Testing for Intermittent Conditions and Poor Connections
- Wiring Repairs

Scan Tool Reference

Control Module References for scan tool information

Circuit/System Verification

1. Verify that DTC U0151 is not set.
   If the DTC is set, refer to DTC U0100-U02FF .
2. Verify that DTC U0073, U0078, B1428, B1370, B1380, B1440, B1441, B1325 or P0562 is not set.
   If any of the DTCs are set, refer to Diagnostic Trouble Code (DTC) List - Vehicle .

Circuit/System Testing

Note: Use the schematic to identify the following:

- The control module location on low-speed GMLAN serial data circuits
- The control module B+, ignition, earth and serial data circuit terminals

1. Vehicle OFF, disconnect the harness connector at the K36 inflatable restraint sensing and diagnostic module (SDM).
2. Test for less than 10 Ω between each ground circuit terminal and ground.
   If greater than the specified range, test the ground circuit for an open/high resistance.
3. If equipped, vehicle in Service Mode, verify that a test lamp illuminates between each B+ circuit terminal and earth.
   If the test lamp does not illuminate, test the B+ circuit for a short to ground or an open/high resistance. If the circuit fuse is open, test the control circuits of the K36 SDM for a short-circuit to earth. If the circuits test normal, replace the K36 SDM.
4. If equipped, vehicle in Service Mode, verify that a test lamp illuminates between each ignition circuit terminal and earth.
   If the test lamp does not illuminate, test the ignition circuit for a short to ground or an open/high resistance. If the circuit fuse is open, test the control circuits of the K36 SDM for a short-circuit to earth. If the circuits test normal, replace the K36 SDM.
5. Vehicle OFF, disconnect the harness connector at the control module setting the DTC.
6. Vehicle OFF, and all vehicle systems OFF, all keys at least 3 metres away from vehicle, all access doors closed. It may take up to 2 minutes for all vehicle systems to power down. Test for less than 2 Ω in the low-speed GMLAN serial data circuit between the K36 SDM and the control module setting the DTC.
   If greater than the specified range, test the serial data circuit for an open-circuit/high resistance between the K36 SDM and the control module setting the DTC.
7. If all circuits test normal, replace the K36 SDM.

Repair Instructions

Perform the Diagnostic Repair Verification after completing the diagnostic procedure.

- GMLAN Wiring Repairs
- Control Module References for control module replacement, programming and setup

&#169© Copyright Chevrolet. All rights reserved

DTC U1850

Diagnostic Instructions

- Perform the Diagnostic System Check - Vehicle prior to using this diagnostic procedure.
- Review Strategy Based Diagnosis for an overview of the diagnostic approach.
- Diagnostic Procedure Instructions provides an overview of each diagnostic category.

DTC Descriptor

DTC U1850 00: Drive Motor Control Module 2 Lost Communication with Transmission Control Module

Diagnostic Fault Information

Circuit	Short to Ground	Open/High Resistance	Short to Voltage	Signal Performance
B+	U1850*	U1850*	--	--
Ignition	U1850*	U1850*	--	--
Accessory Wake Up Serial Data 2	P06E4*	U1850*	--	--
High Speed GMLAN Serial Data (+)	U0073, 1	U0073, U1850*	U0073, 1	--
High Speed GMLAN Serial Data (-)	U0073, 1	U0073, U1850*	U0073, 1	--
Ground	--	U1850*	--	--
* Other modules/DTCs may set with this fault. 1. Scan Tool Does Not Communicate With High-Speed GMLAN Device.				

Circuit/System Description

Control modules connected to the serial data circuits monitor for serial data communications during normal vehicle operation. Operating information and commands are exchanged among the control modules. The control modules have prerecorded information about what messages are needed to be exchanged on the serial data circuits, for each virtual network. The messages are supervised and also, some periodic messages are used by the receiver module as an availability indication of the transmitter module. Each message contains the identification number of the transmitter module.

Conditions for Running the DTC

- The system voltage is at least 10 V.
- The vehicle power mode master requires serial data communication to occur from this specific control module.

Conditions for Setting the DTC

A supervised periodic message that includes the transmitter module availability has not been received.

Action Taken When the DTC Sets

The DTC U1850 is a type B DTC.

Conditions for Clearing the DTC

The DTC U1850 is a type B DTC.

Diagnostic Aids

- Sometimes, while diagnosing a specific customer concern or after a repair, you may notice a history U-code present. However, there is no associated "current" or "active" status. Loss-of- communication U-codes such as these can set for a variety of reasons. Many times, they are transparent to the vehicle operator and technician, and/or have no associated symptoms. Eventually, they will erase themselves automatically after a number of fault-free ignition cycles. This condition would most likely be attributed to one of these scenarios:
  - A control module on the data communication circuit was disconnected while the communication circuit is awake.

DTC U1858

Diagnostic Instructions

- Perform the Diagnostic System Check - Vehicle prior to using this diagnostic procedure.
- Review Strategy Based Diagnosis for an overview of the diagnostic approach.
- Diagnostic Procedure Instructions provides an overview of each diagnostic category.

DTC Descriptor

DTC U1858 00: Electronic Brake Control Module Lost Communication with Hybrid Powertrain Control Module on Chassis Expansion Communication Bus

Diagnostic Fault Information

Circuit	Short to Ground	Open/High Resistance	Short to Voltage	Signal Performance
B+	U1858*	U1858	--	--
Ignition	U1858*	U1858*	--	--
Accessory Wake Up Serial Data 2	P06E4, U1858*	U1858*	--	--
Chassis High Speed GMLAN Serial Data (+)	U0077*	U0077, U1858*	U0077*	-
Chassis High Speed GMLAN Serial Data (-)	U0077*	U0077, U1858*	U0077*	--
Ground	--	U1858*	--	--
* Multiple DTCs may set and multiple symptoms including a no- start condition may occur.				

Circuit/System Description

Control modules connected to the serial data circuits monitor for serial data communications during normal vehicle operation. Operating information and commands are exchanged among the control modules. The control modules have prerecorded information about what messages are needed to be exchanged on the serial data circuits, for each virtual network. The messages are supervised and also, some periodic messages are used by the receiver module as an availability indication of the transmitter module. Each message contains the identification number of the transmitter module.

Conditions for Running the DTC

- The system voltage is between 9–16 V.
- The vehicle power mode master requires serial data communication to occur from this specific control module.

Conditions for Setting the DTC

A supervised periodic message that includes the transmitter module availability has not been received.

Action Taken When the DTC Sets

The control module is never signalled. Therefore, the specific subsystems will not function.

Conditions for Clearing the DTC

- A current DTC clears when the malfunction is no longer present.
- A history DTC clears when the module ignition cycle counter reaches the reset threshold of 50, without a repeat of the malfunction.

Diagnostic Aids

- Sometimes, while diagnosing a specific customer concern or after a repair, you may notice a history U-code present. However, there is no associated "current" or "active" status. Loss-of- communication U-codes such as these can set for a variety of reasons. Many times, they are transparent to the vehicle operator and technician, and/or have no associated symptoms. Eventually, they will erase themselves automatically after a number of fault-free ignition cycles. This condition would most likely be attributed to one of these scenarios:
  - A control module on the data communication circuit was disconnected while the communication circuit is awake.
  - Power to one or more control modules was interrupted during diagnosis.
  - A low battery condition was present, so some control modules stop communicating when battery voltage drops below a certain threshold.
  - Battery power was restored to the vehicle and control modules on the communication circuit did not all re-initialise at the same time.
  - If a loss-of-communication U-code appears in history for no apparent reason, it is most likely associated with one of the scenarios above. These are all temporary conditions and should never be interpreted as an intermittent fault, causing you to replace a part.
- A control module may have a U-code stored in history that does not require any repairs. Issues with late or corrupted messages between control modules can be temporary with no apparent symptom or complaint; this does not mean the control module is faulty. Do not replace a control module based only on a history U-code.
- Do not replace a control module reporting a U-code. The U-code identifies which control module needs to be diagnosed for a communication issue.
- Communication may be available between the control module and the scan tool with one or more GMLAN serial data systems inoperative. This condition is due to the control module using multiple GMLAN busses.
- Use Data Link References to determine what GMLAN serial data communications the non communicating control module uses.
- The control module may not have internal protection for specific control circuits and may open a B+ or ignition fuse. If a fuse is open and the B+ or ignition circuit is not shorted to earth, ensure none of the control circuits are shorted to earth before replacing the non communicating control module.

Reference Information

Schematic Reference

- Data Communication Schematics
- Control Module References

Connector End View Reference

Component Connector End Views

Description and Operation

Data Link Communications Description and Operation

Electrical Information Reference

- Circuit Testing
- Connector Repairs
- Testing for Intermittent Conditions and Poor Connections
- Wiring Repairs

Scan Tool Reference

Control Module References for scan tool information

Circuit/System Verification

1. Verify that DTC U0293 is not set.
   If the DTC is set, refer to DTC U0100-U02FF .
2. Verify that DTC U0077, P06E4, B1428, B1370, B1380, B1440, B1441, B1325, or P0562 is not set.
   If any of the DTCs are set, refer to Diagnostic Trouble Code (DTC) List - Vehicle .

Circuit/System Testing

Note: Use the schematic to identify the following:

- Control module location on the high-speed GMLAN serial data circuits
- The control module B+, ignition, earth, accessory wake-up serial data 2 and serial data circuit terminals

1. Vehicle OFF, disconnect the X1 and X2 harness connectors at the T6 power inverter module.
2. Test for less than 5 Ω between the T6 power inverter module case and earth.
   If greater than the specified range, test the earth strap for an open-circuit/high resistance.
3. If equipped, vehicle in Service Mode, verify that a test lamp illuminates between each B+ circuit terminal and earth.
   If the test lamp does not illuminate, test the B+ circuit for a short to ground or an open/high resistance. If the circuit fuse is open, test the control circuits of the T6 power inverter module for a short-circuit to earth. If the circuits test normal, replace the T6 power inverter module.
4. If equipped, vehicle in Service Mode, verify that a test lamp illuminates between each ignition circuit terminal and earth.
   If the test lamp does not illuminate, test the ignition circuit for a short to ground or an open/high resistance. If the circuit fuse is open, test the control circuits of the T6 power inverter module for a short-circuit to earth. If the circuits test normal, replace the T6 power inverter module.
5. If equipped, vehicle in Service Mode, verify that a test lamp illuminates between the accessory wake-up serial data 2 circuit terminal and earth.
   If the test lamp does not illuminate, test the entire circuit, including the B+ circuit to the K114B hybrid powertrain control module 2, for an open-circuit/high resistance or short-circuit to earth. If the circuits test normal, replace the K114B hybrid powertrain control module 2.
6. Vehicle OFF, disconnect the harness connector at the K17 electronic brake control module.
7. Vehicle OFF, and all vehicle systems OFF, all keys at least 3 metres away from vehicle, all access doors closed. It may take up to 2 minutes for all vehicle systems to power down. Test for less than 2 Ω in each chassis high-speed GMLAN serial data circuit between the T6 power inverter module and the K17 electronic brake control module.
   If greater than the specified range, test the serial data circuit for an open-circuit/high resistance between the T6 power inverter module and the K17 electronic brake control module.
8. If all circuits test normal, replace the T6 power inverter module.

Repair Instructions

Perform the Diagnostic Repair Verification after completing the diagnostic procedure.

- GMLAN Wiring Repairs
- Control Module References for control module replacement, programming and setup

&#169© Copyright Chevrolet. All rights reserved

DTC U185A

Diagnostic Instructions

- Perform the Diagnostic System Check - Vehicle prior to using this diagnostic procedure.
- Review Strategy Based Diagnosis for an overview of the diagnostic approach.
- Diagnostic Procedure Instructions provides an overview of each diagnostic category.

DTC Descriptor

DTC U185A 00: Lost Communication with Battery Energy Control Module on High Voltage Energy Management Communication Bus

Diagnostic Fault Information

Circuit	Short to Ground	Open/High Resistance	Short to Voltage	Signal Performance
B+	U185A*	U185A	--	--
Ignition	U185A*	U185A	--	--
High-Voltage Fault Signal	U185A	U185A	--	--
Accessory Wake Up Serial Data 2	P06E4, U185A*	U185A*	--	--
High-Voltage Energy Management Communication Enable	P1EB9, U185A*	U185A*	--	--
High-Voltage Energy Management High Speed GMLAN Serial Data (+)	U007A*	U007A, U185A*	U007A*	-
High-Voltage Energy Management High Speed GMLAN Serial Data (-)	U007A*	U007A, U185A*	U007A*	--
Ground	--	U185A*	--	--
* Multiple DTCs may be set and multiple symptoms including a no- start condition may occur.				

Circuit/System Description

Control modules connected to the serial data circuits monitor for serial data communications during normal vehicle operation. Operating information and commands are exchanged among the control modules. The control modules have prerecorded information about what messages are needed to be exchanged on the serial data circuits, for each virtual network. The messages are supervised and also, some periodic messages are used by the receiver module as an availability indication of the transmitter module. Each message contains the identification number of the transmitter module.

Conditions for Running the DTC

The system voltage is more than 10 V.

Conditions for Setting the DTC

A supervised periodic message that includes the transmitter module availability has not been received for more than 500 ms.

Action Taken When the DTC Sets

DTC U185A is a type A DTC.

Conditions for Clearing the DTC

DTC U185A is a type A DTC.

Diagnostic Aids

- Sometimes, while diagnosing a specific customer concern or after a repair, you may notice a history U-code present. However, there is no associated "current" or "active" status. Loss-of- communication U-codes such as these can set for a variety of reasons. Many times, they are transparent to the vehicle operator and technician, and/or have no associated symptoms. Eventually, they will erase themselves automatically after a number of fault-free ignition cycles. This condition would most likely be attributed to one of these scenarios:
  - A control module on the data communication circuit was disconnected while the communication circuit is awake.
  - Power to one or more control modules was interrupted during diagnosis.
  - A low battery condition was present, so some control modules stop communicating when battery voltage drops below a certain threshold.
  - Battery power was restored to the vehicle and control modules on the communication circuit did not all re-initialise at the same time.
  - If a loss-of-communication U-code appears in history for no apparent reason, it is most likely associated with one of the scenarios above. These are all temporary conditions and should never be interpreted as an intermittent fault, causing you to replace a part.
- A control module may have a U-code stored in history that does not require any repairs. Issues with late or corrupted messages between control modules can be temporary with no apparent symptom or complaint; this does not mean the control module is faulty. Do not replace a control module based only on a history U-code.
- Do not replace a control module reporting a U-code. The U-code identifies which control module needs to be diagnosed for a communication issue.
- Communication may be available between the control module and the scan tool with one or more GMLAN serial data systems inoperative. This condition is due to the control module using multiple GMLAN busses.
- Use Data Link References to determine what GMLAN serial data communications the non communicating control module uses.
- The control module may not have internal protection for specific control circuits and may open a B+ or ignition fuse. If a fuse is open and the B+ or ignition circuit is not shorted to earth, ensure none of the control circuits are shorted to earth before replacing the non communicating control module.

Reference Information

Schematic Reference

- Data Communication Schematics
- Hybrid Energy Storage Schematics
- Control Module References

Connector End View Reference

Component Connector End Views

Description and Operation

Data Link Communications Description and Operation

Electrical Information Reference

- Circuit Testing
- Connector Repairs
- Testing for Intermittent Conditions and Poor Connections
- Wiring Repairs

Scan Tool Reference

Control Module References for scan tool information

Circuit/System Verification

1. Verify that DTC U1838 is not set.
   If the DTC is set, refer to DTC U007A .
2. Verify that DTC U0111 is not set.
   If the DTC is set, refer to DTC U0100-U02FF .
3. Verify that DTC U007A, P06E4, P1EB9, B1428, B1370, B1380, B1440, B1441, B1325, or P0562 is not set.
   If any of the DTCs are set, refer to Diagnostic Trouble Code (DTC) List - Vehicle .

Circuit/System Testing

Note: Use the schematic to identify the following:

- The control module locations on high-voltage energy management high-speed GMLAN serial data circuits
- The control module B+, ignition, high-voltage fault signal, earth, accessory wake-up serial data 2, high-voltage energy management communication enable and serial data circuit terminals

1. Vehicle OFF, disconnect the X1 and X2 harness connectors at the A4 hybrid battery pack.
2. Test for less than 10 Ω between each ground circuit terminal and ground.
   If greater than the specified range, test the ground circuit for an open/high resistance.
3. If equipped, vehicle in Service Mode, verify that a test lamp illuminates between each B+ circuit terminal and earth.
   If the test lamp does not illuminate, test the B+ circuit for a short to ground or an open/high resistance.
4. If equipped, vehicle in Service Mode, verify that a test lamp illuminates between each ignition circuit terminal and earth.
   If the test lamp does not illuminate, test the ignition circuit for a short to ground or an open/high resistance.
5. Vehicle in Service Mode, test for 4.8-5.2 V between the high- voltage fault signal circuit terminal 6 X2 and earth.
   If less than the specified range, test the high-voltage fault signal circuit for a short-circuit to earth or an open-circuit/high resistance. If the circuit tests normal, replace the K114B hybrid powertrain control module 2.
   If greater than the specified range, test the high-voltage fault signal circuit for a short-circuit to voltage. If the circuit tests normal, replace the K114B hybrid powertrain control module 2.
6. If equipped, vehicle in Service Mode, verify that a test lamp illuminates between the accessory wake-up serial data 2 circuit terminal and earth.
   If the test lamp does not illuminate, test the entire circuit, including the B+ circuit to the K114B hybrid powertrain control module 2, for an open-circuit/high resistance or short-circuit to earth. If the circuits test normal, replace the K114B hybrid powertrain control module 2.
7. If equipped, vehicle in Service Mode, verify that a test lamp illuminates between the high-voltage energy management communication enable circuit terminal and earth.
   If the test lamp does not illuminate, test the entire circuit, including the B+ circuit to the K114B hybrid powertrain control module 2, for an open-circuit/high resistance or short-circuit to earth. If the circuits test normal, replace the K114B hybrid powertrain control module 2.
8. Vehicle OFF, disconnect the harness connector at the control module setting the DTC.
9. Vehicle OFF, and all vehicle systems OFF, all keys at least 3 metres away from vehicle, all access doors closed. It may take up to 2 minutes for all vehicle systems to power down. Test for less than 2 Ω in each high-voltage energy high- speed GMLAN serial data circuit between the A4 hybrid battery pack and the control module setting the DTC.
   If greater than the specified range, test the serial data circuit for an open-circuit/high resistance between the A4 hybrid battery pack and the control module setting the DTC.
10. If all circuits test normal, replace the A4 hybrid/EV battery pack.

Repair Instructions

Perform the Diagnostic Repair Verification after completing the diagnostic procedure.

- GMLAN Wiring Repairs
- Drive Motor Battery Replacement and Shipping Preparation
- Control Module References for control module replacement, programming and setup

&#169© Copyright Chevrolet. All rights reserved

DTC U185B

Diagnostic Instructions

- Perform the Diagnostic System Check - Vehicle prior to using this diagnostic procedure.
- Review Strategy Based Diagnosis for an overview of the diagnostic approach.
- Diagnostic Procedure Instructions provides an overview of each diagnostic category.

DTC Descriptor

DTC U185B 00: Battery Energy Control Module Lost Communication with Hybrid Powertrain Control Module 2 on High Voltage Energy Management Communication Bus

Diagnostic Fault Information

Circuit	Short to Ground	Open/High Resistance	Short to Voltage	Signal Performance
B+	U185B	U185B	--	--
Ignition	U185B	U185B	--	--
Accessory Wake Up Serial Data	U1814	U185B	--	--
High-Voltage Energy Management High Speed GMLAN Serial Data (+)	U007A*	U007A, U185B	U007A*	-
High-Voltage Energy Management High Speed GMLAN Serial Data (-)	U007A*	U007A, U185B	U007A*	--
Ground	--	U185B	--	--
* Other DTCs may set with this fault.				

Circuit/System Description

Control modules connected to the serial data circuits monitor for serial data communications during normal vehicle operation. Operating information and commands are exchanged among the control modules. The control modules have prerecorded information about what messages are needed to be exchanged on the serial data circuits, for each virtual network. The messages are supervised and also, some periodic messages are used by the receiver module as an availability indication of the transmitter module. Each message contains the identification number of the transmitter module.

This diagnostic is used to check the loss of communication with the hybrid powertrain control module 2 on high-voltage energy high-speed GMLAN bus. The battery energy

control module supervises a periodic serial data message to check the communication status of the hybrid powertrain control module 2. If this message is not received within 1 second, this DTC is set.

Conditions for Running the DTC

- The control module is awake and communicating.
- The system voltage is at least 9 V.

Conditions for Setting the DTC

A supervised periodic message that includes the transmitter module availability has not been received within 1 second.

Action Taken When the DTC Sets

- No Cell Balancing function. However, cell balancing switch diagnostics still run.
- DTC U185B is a type B DTC.

Conditions for Clearing the DTC

DTC U185B is a type B DTC.

Diagnostic Aids

- Sometimes, while diagnosing a specific customer concern or after a repair, you may notice a history U-code present. However, there is no associated "current" or "active" status. Loss-of- communication U-codes such as these can set for a variety of reasons. Many times, they are transparent to the vehicle operator and technician, and/or have no associated symptoms. Eventually, they will erase themselves automatically after a number of fault-free ignition cycles. This condition would most likely be attributed to one of these scenarios:
  - A control module on the data communication circuit was disconnected while the communication circuit is awake.
  - Power to one or more control modules was interrupted during diagnosis.
  - A low battery condition was present, so some control modules stop communicating when battery voltage drops below a certain threshold.
  - Battery power was restored to the vehicle and control modules on the communication circuit did not all re-initialise at the same time.
  - If a loss-of-communication U-code appears in history for no apparent reason, it is most likely associated with one of the scenarios above. These are all temporary conditions and should never be interpreted as an intermittent fault, causing you to replace a part.
- A control module may have a U-code stored in history that does not require any repairs. Issues with late or corrupted messages between control modules can be temporary with no apparent symptom or complaint; this does not mean the control module is faulty. Do not replace a control module based only on a history U-code.
- Do not replace a control module reporting a U-code. The U-code identifies which control module needs to be diagnosed for a communication issue.
- Communication may be available between the control module and the scan tool with one or more GMLAN serial data systems inoperative. This condition is due to the control module using multiple GMLAN busses.

- Use Data Link References to determine what GMLAN serial data communications the non communicating control module uses.
- The control module may not have internal protection for specific control circuits and may open a B+ or ignition fuse. If a fuse is open and the B+ or ignition circuit is not shorted to ground, ensure none of the control circuits are shorted to ground before replacing the control module.

Reference Information

Schematic Reference

- Data Communication Schematics
- Control Module References

Connector End View Reference

Component Connector End Views

Description and Operation

Data Link Communications Description and Operation

Electrical Information Reference

- Circuit Testing
- Connector Repairs
- Testing for Intermittent Conditions and Poor Connections
- Wiring Repairs

Scan Tool Reference

Control Module References for scan tool information

Circuit/System Verification

Verify that DTC U007A, U1814, B1428, B1370, B1380, B1440, B1441, B1325 or P0562 is not set.

If any of the DTCs are set, refer to Diagnostic Trouble Code (DTC) List - Vehicle to diagnose those DTCs prior to this diagnostic.

Circuit/System Testing

Note: Use the schematic to identify the following:

- The control module locations on high-voltage energy management high-speed GMLAN serial data circuits
- The control module B+, ignition, earth, accessory wake-up serial data and serial data circuit terminals

1. Vehicle OFF, disconnect the harness connector at the K114B hybrid powertrain control module 2.
2. Test for less than 10 Ω between each ground circuit terminal and ground.
   If greater than the specified range, test the ground circuit for an open/high resistance.
3. If equipped, vehicle in Service Mode, verify that a test lamp illuminates between each B+ circuit terminal and earth.
   If the test lamp does not illuminate, test the B+ circuit for a short to ground or an open/high resistance. If the circuit fuse is open, test the control circuits of the K114B hybrid powertrain control module 2 for a short-circuit to earth. If the circuits test normal, replace the K114B hybrid powertrain control module 2.
4. If equipped, vehicle in Service Mode, verify that a test lamp illuminates between each ignition circuit terminal and earth.
   If the test lamp does not illuminate, test the ignition circuit for a short to ground or an open/high resistance. If the circuit fuse is open, test the control circuits of the K114B hybrid powertrain control module 2 for a short-circuit to earth. If the circuits test normal, replace the K114B hybrid powertrain control module 2.
5. If equipped, vehicle in Service Mode, verify that a test lamp illuminates between the accessory wake up serial data circuit terminal and earth.
   If the test lamp does not illuminate, test the entire circuit, including the B+ circuit to the K9 body control module (BCM), for an open-circuit/high resistance or a short-circuit to earth. If the circuits test normal, replace the K9 BCM.
6. Vehicle OFF, disconnect the X1 harness connector at the A4 hybrid battery pack.
7. Vehicle OFF, and all vehicle systems OFF, all keys at least 3 metres away from vehicle, all access doors closed. It may take up to 2 minutes for all vehicle systems to power down. Test for less than 2 Ω in each high-voltage energy serial data circuit between the K114B hybrid powertrain control module 2 and the A4 hybrid battery pack.
   If greater than the specified range, test the serial data circuit for an open-circuit/high resistance between the K114B hybrid powertrain control module 2 and the A4 hybrid battery pack.
8. If all circuits test normal, replace the K114B hybrid powertrain control module 2.
9. If the DTC resets, replace the A4 hybrid/EV battery pack.

Repair Instructions

Perform the Diagnostic Repair Verification after completing the diagnostic procedure.

- GMLAN Wiring Repairs
- Drive Motor Battery Replacement and Shipping Preparation
- Control Module References for control module replacement, programming and setup

&#169© Copyright Chevrolet. All rights reserved

DTC U185C

Diagnostic Instructions

- Perform the Diagnostic System Check - Vehicle prior to using this diagnostic procedure.
- Review Strategy Based Diagnosis for an overview of the diagnostic approach.
- Diagnostic Procedure Instructions provides an overview of each diagnostic category.

DTC Descriptor

DTC U185C 00: Battery Charger Control Module Lost Communication with Hybrid Powertrain Control Module 2 on High Voltage Energy Management Communication Bus

Diagnostic Fault Information

Circuit	Short to Ground	Open/High Resistance	Short to Voltage	Signal Performance
B+	U185C	U185C	--	--
Ignition	U185C	U185C	--	--
Accessory Wake Up Serial Data	U1814	U185C	--	--
High-Voltage Energy Management High Speed GMLAN Serial Data (+)	U007A*	U007A, U185C	U007A*	-
High-Voltage Energy Management High Speed GMLAN Serial Data (-)	U007A*	U007A, U185C	U007A*	--
Ground	--	U185C	--	--
* Other DTCs may set with this fault.				

Circuit/System Description

Control modules connected to the serial data circuits monitor for serial data communications during normal vehicle operation. Operating information and commands are exchanged among the control modules. The control modules have prerecorded information about what messages are needed to be exchanged on the serial data circuits, for each virtual network. The messages are supervised and also, some periodic messages are used by the receiver module as an availability indication of the transmitter module. Each message contains the identification number of the transmitter module.

Conditions for Running the DTC

The system voltage is between 9–16 V.

Conditions for Setting the DTC

A supervised periodic message that includes the transmitter module availability has not been received.

Action Taken When the DTC Sets

The DTC U185C is a type A DTC.

Conditions for Clearing the DTC

The DTC U185C is a type A DTC.

Diagnostic Aids

- Sometimes, while diagnosing a specific customer concern or after a repair, you may notice a history U-code present. However, there is no associated "current" or "active" status. Loss-of- communication U-codes such as these can set for a variety of reasons. Many times, they are transparent to the vehicle operator and technician, and/or have no associated symptoms. Eventually, they will erase themselves automatically after a number of fault-free ignition cycles. This condition would most likely be attributed to one of these scenarios:
  - A control module on the data communication circuit was disconnected while the communication circuit is awake.
  - Power to one or more control modules was interrupted during diagnosis.
  - A low battery condition was present, so some control modules stop communicating when battery voltage drops below a certain threshold.
  - Battery power was restored to the vehicle and control modules on the communication circuit did not all re-initialise at the same time.
  - If a loss-of-communication U-code appears in history for no apparent reason, it is most likely associated with one of the scenarios above. These are all temporary conditions and should never be interpreted as an intermittent fault, causing you to replace a part.
- A control module may have a U-code stored in history that does not require any repairs. Issues with late or corrupted messages between control modules can be temporary with no apparent symptom or complaint; this does not mean the control module is faulty. Do not replace a control module based only on a history U-code.
- Do not replace a control module reporting a U-code. The U-code identifies which control module needs to be diagnosed for a communication issue.
- Communication may be available between the control module and the scan tool with one or more GMLAN serial data systems inoperative. This condition is due to the control module using multiple GMLAN busses.
- Use Data Link References to determine what GMLAN serial data communications the non communicating control module uses.
- The control module may not have internal protection for specific control circuits and may open a B+ or ignition fuse. If a fuse is open and the B+ or ignition circuit is not shorted to earth, ensure none of the control circuits are shorted to earth before replacing the non communicating control module.

Reference Information

Schematic Reference

- Data Communication Schematics
- Control Module References

Connector End View Reference

Component Connector End Views

Description and Operation

Data Link Communications Description and Operation

Electrical Information Reference

- Circuit Testing
- Connector Repairs
- Testing for Intermittent Conditions and Poor Connections
- Wiring Repairs

Scan Tool Reference

Control Module References for scan tool information

Circuit/System Verification

Verify that DTC U007A, U1814, U2099, B1428, B1370, B1380, B1440, B1441, B1325 or P0562 is not set.

If any of the DTCs are set, refer to Diagnostic Trouble Code (DTC) List - Vehicle to diagnose those DTCs prior to this diagnostic.

Circuit/System Testing

Note: Use the schematic to identify the following:

- The control module locations on the all GMLAN serial data circuits.
- The control module B+, ignition, earth, accessory wake up serial data and serial data circuit terminals.

1. Vehicle OFF, disconnect the harness connector at the K114B hybrid powertrain control module 2.
2. Test for less than 10 Ω between each ground circuit terminal and ground.
   If greater than the specified range, test the ground circuit for an open/high resistance.

3. If equipped, vehicle in Service Mode, verify that a test lamp illuminates between each B+ circuit terminal and earth.
   If the test lamp does not illuminate, test the B+ circuit for a short to ground or an open/high resistance. If the circuit fuse is open, test the control circuits of the K114B hybrid powertrain control module 2 for a short-circuit to earth. If the circuits test normal, replace the K114B hybrid powertrain control module 2.
4. If equipped, vehicle in Service Mode, verify that a test lamp illuminates between each ignition circuit terminal and earth.
   If the test lamp does not illuminate, test the ignition circuit for a short to ground or an open/high resistance. If the circuit fuse is open, test the control circuits of the K114B hybrid powertrain control module 2 for a short-circuit to earth. If the circuits test normal, replace the K114B hybrid powertrain control module 2.
5. If equipped, vehicle in Service Mode, verify that a test lamp illuminates between the accessory wake up serial data circuit terminal and earth.
   If the test lamp does not illuminate, test the entire circuit, including the B+ circuit to the K9 body control module (BCM), for an open-circuit/high resistance or a short-circuit to earth. If the circuits test normal, replace the K9 BCM.
6. Vehicle OFF, disconnect the X1 harness connector at the T18 battery charger.
7. Vehicle OFF, and all vehicle systems OFF, all keys at least 3 metres away from vehicle, all access doors closed. It may take up to 2 minutes for all vehicle systems to power down. Test for less than 2 Ω in each high-voltage energy high- speed GMLAN serial data circuit between the K114B hybrid powertrain control module 2 and the T18 battery charger.
   If greater than the specified range, test the serial data circuit for an open-circuit/high resistance between the K114B hybrid powertrain control module 2 and the T18 battery charger.
8. If all circuits test normal, replace the K114B hybrid powertrain control module 2.

Repair Instructions

Perform the Diagnostic Repair Verification after completing the diagnostic procedure.

- GMLAN Wiring Repairs
- Control Module References for control module replacement, programming and setup

&#169© Copyright Chevrolet. All rights reserved

DTC U1860

Diagnostic Instructions

- Perform the Diagnostic System Check - Vehicle prior to using this diagnostic procedure.
- Review Strategy Based Diagnosis for an overview of the diagnostic approach.
- Diagnostic Procedure Instructions provides an overview of each diagnostic category.

DTC Descriptor

DTC U1860 00: Electric A/C Compressor Control Module Lost Communication with Hybrid Powertrain Control Module 2

Diagnostic Fault Information

Circuit	Short to Ground	Open/High Resistance	Short to Voltage	Signal Performance
B+	U1860	U1860	--	--
Ignition	U1860	U1860	--	--
Accessory Wake Up Serial Data	U1814	U1860	--	--
High Speed GMLAN Serial Data (+)	U0073*	U0073, U1860	U0073*	--
High Speed GMLAN Serial Data (-)	U0073*	U0073, U1860	U0073*	--
Ground	--	U1860	--	--
* Scan Tool Does Not Communicate With High-Speed GMLAN Device				

Circuit/System Description

Control modules connected to the serial data circuits monitor for serial data communications during normal vehicle operation. Operating information and commands are exchanged among the control modules. The control modules have prerecorded information about what messages are needed to be exchanged on the serial data circuits, for each virtual network. The messages are supervised and also, some periodic messages are used by the receiver module as an availability indication of the transmitter module. Each message contains the identification number of the transmitter module.

Conditions for Running the DTC

The system voltage is greater than 10.25 V.

Conditions for Setting the DTC

The A/C compressor control module is not able to receive the serial data message from the hybrid powertrain control module 2 for 3 seconds.

Action Taken When the DTC Sets

The DTC U1860 is a type B DTC.

Conditions for Clearing the DTC

The DTC U1860 is a type B DTC.

Diagnostic Aids

- Sometimes, while diagnosing a specific customer concern or after a repair, you may notice a history U-code present. However, there is no associated "current" or "active" status. Loss-of- communication U-codes such as these can set for a variety of reasons. Many times, they are transparent to the vehicle operator and technician, and/or have no associated symptoms. Eventually, they will erase themselves automatically after a number of fault-free ignition cycles. This condition would most likely be attributed to one of these scenarios:
  - A control module on the data communication circuit was disconnected while the communication circuit is awake.
  - Power to one or more control modules was interrupted during diagnosis.
  - A low battery condition was present, so some control modules stop communicating when battery voltage drops below a certain threshold.
  - Battery power was restored to the vehicle and control modules on the communication circuit did not all re-initialise at the same time.
  - If a loss-of-communication U-code appears in history for no apparent reason, it is most likely associated with one of the scenarios above. These are all temporary conditions and should never be interpreted as an intermittent fault, causing you to replace a part.
- A control module may have a U-code stored in history that does not require any repairs. Issues with late or corrupted messages between control modules can be temporary with no apparent symptom or complaint; this does not mean the control module is faulty. Do not replace a control module based only on a history U-code.
- Do not replace a control module reporting a U-code. The U-code identifies which control module needs to be diagnosed for a communication issue.
- Communication may be available between the control module and the scan tool with one or more GMLAN serial data systems inoperative. This condition is due to the control module using multiple GMLAN busses.
- Use Data Link References to determine what GMLAN serial data communications the non communicating control module uses.
- The control module may not have internal protection for specific control circuits and may open a B+ or ignition fuse. If a fuse is open and the B+ or ignition circuit is not shorted to earth, ensure none of the control circuits are shorted to earth before replacing the non communicating control module.

Reference Information

Schematic Reference

- Data Communication Schematics
- Control Module References

Connector End View Reference

Component Connector End Views

Description and Operation

Data Link Communications Description and Operation

Electrical Information Reference

- Circuit Testing
- Connector Repairs
- Testing for Intermittent Conditions and Poor Connections
- Wiring Repairs

Scan Tool Reference

Control Module References for scan tool information

Circuit/System Verification

Verify that DTC U0073, U1814, B1428, B1370, B1380, B1440, B1441, B1325 or P0562 is not set.

If any of the DTCs are set, refer to Diagnostic Trouble Code (DTC) List - Vehicle to diagnose those DTCs prior to this diagnostic.

Circuit/System Testing

Note: Use the schematic to identify the following:

- Control module location on the high-speed GMLAN serial data circuits
- The control module B+, ignition, earth, accessory wake-up serial data and serial data circuit terminals

1. Vehicle OFF, disconnect the harness connector at the K114B hybrid powertrain control module 2.
2. Test for less than 10 Ω between each ground circuit terminal and ground.
   If greater than the specified range, test the ground circuit for an open/high resistance.

3. If equipped, vehicle in Service Mode, verify that a test lamp illuminates between each B+ circuit terminal and earth.
   If the test lamp does not illuminate, test the B+ circuit for a short to ground or an open/high resistance. If the circuit fuse is open, test the control circuits of the K114B hybrid powertrain control module 2 for a short-circuit to earth. If the circuits test normal, replace the K114B hybrid powertrain control module 2.
4. If equipped, vehicle in Service Mode, verify that a test lamp illuminates between each ignition circuit terminal and earth.
   If the test lamp does not illuminate, test the ignition circuit for a short to ground or an open/high resistance. If the circuit fuse is open, test the control circuits of the K114B hybrid powertrain control module 2 for a short-circuit to earth. If the circuits test normal, replace the K114B hybrid powertrain control module 2.
5. If equipped, vehicle in Service Mode, verify that a test lamp illuminates between the accessory wake up serial data circuit terminal and earth.
   If the test lamp does not illuminate, test the entire circuit, including the B+ circuit to the K9 body control module (BCM), for an open-circuit/high resistance or a short-circuit to earth. If the circuits test normal, replace the K9 BCM.
6. Vehicle OFF, disconnect the X1 harness connector at the G1 A/C compressor.
7. Vehicle OFF, and all vehicle systems OFF, all keys at least 3 metres away from vehicle, all access doors closed. It may take up to 2 minutes for all vehicle systems to power down. Test for less than 2 Ω in each high-speed GMLAN serial data circuit between the K114B hybrid powertrain control module 2 and the G1 A/C compressor.
   If greater than the specified range, test the serial data circuit for an open-circuit/high resistance between the K114B hybrid powertrain control module 2 and the G1 A/C compressor.
8. If all circuits test normal, replace the K114B hybrid powertrain control module 2.

Repair Instructions

Perform the Diagnostic Repair Verification after completing the diagnostic procedure.

- GMLAN Wiring Repairs
- Control Module References for control module replacement, programming and setup

&#169© Copyright Chevrolet. All rights reserved

DTC U1861

Diagnostic Instructions

- Perform the Diagnostic System Check - Vehicle prior to using this diagnostic procedure.
- Review Strategy Based Diagnosis for an overview of the diagnostic approach.
- Diagnostic Procedure Instructions provides an overview of each diagnostic category.

DTC Descriptor

DTC U1861 00: Battery Charger Control Module Lost Communication with Engine Control Module

Diagnostic Fault Information

Circuit	Short to Ground	Open/High Resistance	Short to Voltage	Signal Performance
B+	U1861*	U1861	--	--
Ignition	U1861*	U1861*	--	--
Accessory Wake Up Serial Data 2	P06E4*	U1861*	--	--
High Speed GMLAN Serial Data (+)	U0073*	U0073, U1861*	U0073*	--
High Speed GMLAN Serial Data (-)	U0073*	U0073, U1861*	U0073*	--
Ground	--	U1861*	--	--
* Other modules/DTCs may set with this fault and multiple symptoms including a no-start condition may occur.				

Circuit/System Description

Control modules connected to the serial data circuits monitor for serial data communications during normal vehicle operation. Operating information and commands are exchanged among the control modules. The control modules have prerecorded information about what messages are needed to be exchanged on the serial data circuits, for each virtual network. The messages are supervised and also, some periodic messages are used by the receiver module as an availability indication of the transmitter module. Each message contains the identification number of the transmitter module.

Conditions for Running the DTC

- The system voltage is between 9–16 V.
- The vehicle power mode master requires serial data communication to occur from this specific control module.

Conditions for Setting the DTC

A supervised periodic message that includes the transmitter module availability has not been received.

Action Taken When the DTC Sets

The DTC U1861 is a type B DTC.

Conditions for Clearing the DTC

The DTC U1861 is a type B DTC.

Diagnostic Aids

- Sometimes, while diagnosing a specific customer concern or after a repair, you may notice a history U-code present. However, there is no associated "current" or "active" status. Loss-of- communication U-codes such as these can set for a variety of reasons. Many times, they are transparent to the vehicle operator and technician, and/or have no associated symptoms. Eventually, they will erase themselves automatically after a number of fault-free ignition cycles. This condition would most likely be attributed to one of these scenarios:
  - A control module on the data communication circuit was disconnected while the communication circuit is awake.
  - Power to one or more control modules was interrupted during diagnosis.
  - A low battery condition was present, so some control modules stop communicating when battery voltage drops below a certain threshold.
  - Battery power was restored to the vehicle and control modules on the communication circuit did not all re-initialise at the same time.
  - If a loss-of-communication U-code appears in history for no apparent reason, it is most likely associated with one of the scenarios above. These are all temporary conditions and should never be interpreted as an intermittent fault, causing you to replace a part.
- A control module may have a U-code stored in history that does not require any repairs. Issues with late or corrupted messages between control modules can be temporary with no apparent symptom or complaint; this does not mean the control module is faulty. Do not replace a control module based only on a history U-code.
- Do not replace a control module reporting a U-code. The U-code identifies which control module needs to be diagnosed for a communication issue.
- Communication may be available between the control module and the scan tool with one or more GMLAN serial data systems inoperative. This condition is due to the control module using multiple GMLAN busses.
- Use Data Link References to determine what GMLAN serial data communications the non communicating control module uses.
- The control module may not have internal protection for specific control circuits and may open a B+ or ignition fuse. If a fuse is open and the B+ or ignition circuit is not shorted to earth, ensure none of the control circuits are shorted to earth before replacing the non communicating control module.

Reference Information

Schematic Reference

- Data Communication Schematics
- Control Module References

Connector End View Reference

Component Connector End Views

Description and Operation

Data Link Communications Description and Operation

Electrical Information Reference

- Circuit Testing
- Connector Repairs
- Testing for Intermittent Conditions and Poor Connections
- Wiring Repairs

Scan Tool Reference

Control Module References for scan tool information

Circuit/System Verification

1. Verify that DTC U0100 is not set.
   If the DTC is set, refer to DTC U0100-U02FF .
2. Verify that DTC U0073, P06E4, U1814, B1428, B1370, B1380, B1440, B1441, B1325, or P0562 is not set.
   If any of the DTCs are set, refer to Diagnostic Trouble Code (DTC) List - Vehicle .

Circuit/System Testing

Note: Use the schematic to identify the following:

- Control module location on the high-speed GMLAN serial data circuits
- The control module B+, ignition, earth, accessory wake-up serial data 2 and serial data circuit terminals

1. Vehicle OFF, disconnect the harness connector at the K20 engine control module (ECM).

2. Test for less than 10 Ω between each ground circuit terminal and ground.
   If greater than the specified range, test the ground circuit for an open/high resistance.
3. If equipped, vehicle in Service Mode, verify that a test lamp illuminates between each B+ circuit terminal and earth.
   If the test lamp does not illuminate, test the B+ circuit for a short to ground or an open/high resistance. If the circuit fuse is open, test the control circuits of the K20 ECM for a short-circuit to earth. If the circuits test normal, replace the K20 ECM.
4. If equipped, vehicle in Service Mode, verify that a test lamp illuminates between each ignition circuit terminal and earth.
   If the test lamp does not illuminate, test the ignition circuit for a short to ground or an open/high resistance. If the circuit fuse is open, test the control circuits of the K20 ECM for a short-circuit to earth. If the circuits test normal, replace the K20 ECM.
5. If equipped, vehicle in Service Mode, verify that a test lamp illuminates between the accessory wake-up serial data 2 circuit terminal and earth.
   If the test lamp does not illuminate, test the entire circuit, including the B+ circuit to the K114B hybrid powertrain control module 2, for an open-circuit/high resistance or short-circuit to earth. If the circuits test normal, replace the K114B hybrid powertrain control module 2.
6. Vehicle OFF, disconnect the X1 harness connector at the T18 battery charger.
7. Vehicle OFF, and all vehicle systems OFF, all keys at least 3 metres away from vehicle, all access doors closed. It may take up to 2 minutes for all vehicle systems to power down. Test for less than 2 Ω in each high-speed GMLAN serial data circuit between the K20 ECM and the T18 battery charger.
   If greater than the specified range, test the serial data circuit for an open-circuit/high resistance between the K20 ECM and the T18 battery charger.
8. If all circuits test normal, replace the K20 ECM.

Repair Instructions

Perform the Diagnostic Repair Verification after completing the diagnostic procedure.

- GMLAN Wiring Repairs
- Control Module References for control module replacement, programming and setup

&#169© Copyright Chevrolet. All rights reserved

DTC U186A

Diagnostic Instructions

- Perform the Diagnostic System Check - Vehicle prior to using this diagnostic procedure.
- Review Strategy Based Diagnosis for an overview of the diagnostic approach.
- Diagnostic Procedure Instructions provides an overview of each diagnostic category.

DTC Descriptor

DTC U186A 00: Electronic Brake Control Module Lost Communication with Engine Control Module

Diagnostic Fault Information

Circuit	Short to Ground	Open/High Resistance	Short to Voltage	Signal Performance
B+	U186A*	U186A*	--	--
Ignition	U186A*	U186A*	--	--
Accessory Wake Up Serial Data 2	P06E4*	U186A*	--	--
High Speed GMLAN Serial Data (+)	U0073*	U0073, U186A*	U0073*	--
High Speed GMLAN Serial Data (-)	U0073*	U0073, U186A*	U0073*	--
Ground	--	U186A*	--	--
* Other modules/DTCs may set, and multiple symptoms including no start may occur.				

Circuit/System Description

Control modules connected to the serial data circuits monitor for serial data communications during normal vehicle operation. Operating information and commands are exchanged among the control modules. The control modules have prerecorded information about what messages are needed to be exchanged on the serial data circuits, for each virtual network. The messages are supervised and also, some periodic messages are used by the receiver module as an availability indication of the transmitter module. Each message contains the identification number of the transmitter module.

Conditions for Running the DTC

- The system voltage is between 9–16 V.
- The vehicle power mode master requires serial data communication to occur from this specific module.

Conditions for Setting the DTC

A supervised periodic message that includes the transmitter module availability has not been received.

Action Taken When the DTC Sets

The DTC U186A is a type B DTC.

Conditions for Clearing the DTC

The DTC U186A is a type B DTC.

Diagnostic Aids

- Sometimes, while diagnosing a specific customer concern or after a repair, you may notice a history U-code present. However, there is no associated "current" or "active" status. Loss-of- communication U-codes such as these can set for a variety of reasons. Many times, they are transparent to the vehicle operator and technician, and/or have no associated symptoms. Eventually, they will erase themselves automatically after a number of fault-free ignition cycles. This condition would most likely be attributed to one of these scenarios:
  - A control module on the data communication circuit was disconnected while the communication circuit is awake.
  - Power to one or more control modules was interrupted during diagnosis.
  - A low battery condition was present, so some control modules stop communicating when battery voltage drops below a certain threshold.
  - Battery power was restored to the vehicle and control modules on the communication circuit did not all re-initialise at the same time.
  - If a loss-of-communication U-code appears in history for no apparent reason, it is most likely associated with one of the scenarios above. These are all temporary conditions and should never be interpreted as an intermittent fault, causing you to replace a part.
- A control module may have a U-code stored in history that does not require any repairs. Issues with late or corrupted messages between control modules can be temporary with no apparent symptom or complaint; this does not mean the control module is faulty. Do not replace a control module based only on a history U-code.
- Do not replace a control module reporting a U-code. The U-code identifies which control module needs to be diagnosed for a communication issue.
- Communication may be available between the control module and the scan tool with one or more GMLAN serial data systems inoperative. This condition is due to the control module using multiple GMLAN busses.
- Use Data Link References to determine what GMLAN serial data communications the non communicating control module uses.
- The control module may not have internal protection for specific control circuits and may open a B+ or ignition fuse. If a fuse is open and the B+ or ignition circuit is not shorted to earth, ensure none of the control circuits are shorted to earth before replacing the non communicating control module.

Reference Information

Schematic Reference

- Data Communication Schematics
- Control Module References

Connector End View Reference

Component Connector End Views

Description and Operation

Data Link Communications Description and Operation

Electrical Information Reference

- Circuit Testing
- Connector Repairs
- Testing for Intermittent Conditions and Poor Connections
- Wiring Repairs

Scan Tool Reference

Control Module References for scan tool information

Circuit/System Verification

1. Verify that DTC U0100 is not set.
   If the DTC is set, refer to DTC U0100-U02FF .
2. Verify that DTC U0073, P06E4, U1814, B1428, B1370, B1380, B1440, B1441, B1325, or P0562 is not set.
   If any of these DTCs is set, refer to Diagnostic Trouble Code (DTC) List - Vehicle .

Circuit/System Testing

Note: Use the schematic to identify the following:

- The control module location on the high-speed GMLAN serial data circuits.
- The control module B+, ignition, earth, accessory wake-up serial data 2 and serial data circuit terminals.

1. Vehicle OFF, disconnect harness connector at the K20 engine control module (ECM).

2. Test for less than 10 Ω between each ground circuit terminal and ground.
   If greater than the specified range, test the ground circuit for an open/high resistance.
3. If equipped, vehicle in Service Mode, verify that a test lamp illuminates between each B+ circuit terminal and earth.
   If the test lamp does not illuminate, test the B+ circuit for a short to ground or an open/high resistance. If the circuit fuse is open, test the control circuits of the K20 ECM for a short-circuit to earth. If the circuits test normal, replace the K20 ECM.
4. If equipped, vehicle in Service Mode, verify that a test lamp illuminates between each ignition circuit terminal and earth.
   If the test lamp does not illuminate, test the ignition circuit for a short to ground or an open/high resistance. If the circuit fuse is open, test the control circuits of the K20 ECM for a short-circuit to earth. If the circuits test normal, replace the K20 ECM.
5. If equipped, vehicle in Service Mode, verify that a test lamp illuminates between the accessory wake-up serial data 2 circuit terminal and earth.
   If the test lamp does not illuminate, test the entire circuit, including the B+ circuit to the K114B hybrid powertrain control module 2, for an open-circuit/high resistance or short-circuit to earth. If the circuits test normal, replace the K114B hybrid powertrain control module 2.
6. Vehicle OFF, disconnect the harness connector at the K17 electronic brake control module (EBCM).
7. Vehicle OFF, and all vehicle systems OFF, all keys at least 3 metres away from vehicle, all access doors closed. It may take up to 2 minutes for all vehicle systems to power down. Test for less than 2 Ω in each high-speed GMLAN serial data circuit between the K20 ECM and the K17 EBCM.
   If greater than the specified range, test the serial data circuit for an open-circuit/high-resistance between the K20 ECM and the K17 EBCM.
8. If the circuits test normal, replace the K20 ECM.

Repair Instructions

Perform the Diagnostic Repair Verification after completing the diagnostic procedure.

- GMLAN Wiring Repairs
- Control Module References for control module replacement, programming and setup

&#169© Copyright Chevrolet. All rights reserved

DTC U186B

Diagnostic Instructions

- Perform the Diagnostic System Check - Vehicle prior to using this diagnostic procedure.
- Review Strategy Based Diagnosis for an overview of the diagnostic approach.
- Diagnostic Procedure Instructions provides an overview of each diagnostic category.

DTC Descriptor

DTC U186B 00: Electronic Brake Control Module Lost Communication with Transmission Control Module

Diagnostic Fault Information

Circuit	Short to Ground	Open/High Resistance	Short to Voltage	Signal Performance
B+	U186B*	U186B*	--	--
Ignition	U186B*	U186B*	--	--
Accessory Wake Up Serial Data 2	P06E4*	U186B*	--	--
High Speed GMLAN Serial Data (+)	U0073*	U0073, U186B*	U0073*	--
High Speed GMLAN Serial Data (-)	U0073*	U0073, U186B*	U0073*	--
Ground	--	U186B*	--	--
* Other modules/DTCs may set and multiple symptoms including a no-start condition may occur.				

Circuit/System Description

Control modules connected to the serial data circuits monitor for serial data communications during normal vehicle operation. Operating information and commands are exchanged among the control modules. The control modules have prerecorded information about what messages are needed to be exchanged on the serial data circuits, for each virtual network. The messages are supervised and also, some periodic messages are used by the receiver module as an availability indication of the transmitter module. Each message contains the identification number of the transmitter module.

Conditions for Running the DTC

- The system voltage is between 9–16 V.
- The vehicle power mode master requires serial data communication to occur from this specific control module.

Conditions for Setting the DTC

A supervised periodic message that includes the transmitter module availability has not been received.

Action Taken When the DTC Sets

The DTC U186B is a type B DTC.

Conditions for Clearing the DTC

The DTC U186B is a type B DTC.

Diagnostic Aids

- Sometimes, while diagnosing a specific customer concern or after a repair, you may notice a history U-code present. However, there is no associated "current" or "active" status. Loss-of- communication U-codes such as these can set for a variety of reasons. Many times, they are transparent to the vehicle operator and technician, and/or have no associated symptoms. Eventually, they will erase themselves automatically after a number of fault-free ignition cycles. This condition would most likely be attributed to one of these scenarios:
  - A control module on the data communication circuit was disconnected while the communication circuit is awake.
  - Power to one or more control modules was interrupted during diagnosis.
  - A low battery condition was present, so some control modules stop communicating when battery voltage drops below a certain threshold.
  - Battery power was restored to the vehicle and control modules on the communication circuit did not all re-initialise at the same time.
  - If a loss-of-communication U-code appears in history for no apparent reason, it is most likely associated with one of the scenarios above. These are all temporary conditions and should never be interpreted as an intermittent fault, causing you to replace a part.
- A control module may have a U-code stored in history that does not require any repairs. Issues with late or corrupted messages between control modules can be temporary with no apparent symptom or complaint; this does not mean the control module is faulty. Do not replace a control module based only on a history U-code.
- Do not replace a control module reporting a U-code. The U-code identifies which control module needs to be diagnosed for a communication issue.
- Communication may be available between the control module and the scan tool with one or more GMLAN serial data systems inoperative. This condition is due to the control module using multiple GMLAN busses.
- Use Data Link References to determine what GMLAN serial data communications the non communicating control module uses.
- The control module may not have internal protection for specific control circuits and may open a B+ or ignition fuse. If a fuse is open and the B+ or ignition circuit is not shorted to earth, ensure none of the control circuits are shorted to earth before replacing the non communicating control module.

Reference Information

Schematic Reference

- Data Communication Schematics
- Control Module References

Connector End View Reference

Component Connector End Views

Description and Operation

Data Link Communications Description and Operation

Electrical Information Reference

- Circuit Testing
- Connector Repairs
- Testing for Intermittent Conditions and Poor Connections
- Wiring Repairs

Scan Tool Reference

Control Module References for scan tool information

Circuit/System Verification

1. Verify that DTC U0101 is not set.
   If the DTC is set, refer to DTC U0100-U02FF .
2. Verify that DTC U0073, P06E4, U1814, B1428, B1370, B1380, B1440, B1441, B1325, or P0562 is not set.
   If any of these DTCs is set, refer to Diagnostic Trouble Code (DTC) List - Vehicle .

Circuit/System Testing

Note: Use the schematic to identify the following:

- Control module location on the high-speed GMLAN serial data circuits
- The control module B+, ignition, earth, accessory wake-up serial data 2 and serial data circuit terminals

1. Vehicle OFF, disconnect harness connector at the K71 transmission control module (TCM).

2. Test for less than 10 Ω between each ground circuit terminal and ground.
   If greater than the specified range, test the ground circuit for an open/high resistance.
3. If equipped, vehicle in Service Mode, verify that a test lamp illuminates between each B+ circuit terminal and earth.
   If the test lamp does not illuminate, test the B+ circuit for a short to ground or an open/high resistance. If the circuit fuse is open, test the control circuits of the K71 TCM for a short-circuit to earth. If the circuits test normal, replace the K71 TCM.
4. If equipped, vehicle in Service Mode, verify that a test lamp illuminates between each ignition circuit terminal and earth.
   If the test lamp does not illuminate, test the ignition circuit for a short to ground or an open/high resistance. If the circuit fuse is open, test the control circuits of the K71 TCM for a short-circuit to earth. If the circuits test normal, replace the K71 TCM.
5. If equipped, vehicle in Service Mode, verify that a test lamp illuminates between the accessory wake-up serial data 2 circuit terminal and earth.
   If the test lamp does not illuminate, test the entire circuit, including the B+ circuit to the K114B hybrid powertrain control module 2, for an open-circuit/high resistance or short-circuit to earth. If the circuits test normal, replace the K114B hybrid powertrain control module 2.
6. Vehicle OFF, disconnect the harness connector at the K17 electronic brake control module (EBCM).
7. Vehicle OFF, and all vehicle systems OFF, all keys at least 3 metres away from vehicle, all access doors closed. It may take up to 2 minutes for all vehicle systems to power down. Test for less than 2 Ω in each high-speed GMLAN serial data circuit between the K71 TCM and the K17 EBCM.
   If greater than the specified range, test the serial data circuit for an open-cicuit/high resistance between the K71 TCM and the K17 EBCM.
8. If all circuits test normal, replace the K71 TCM.

Repair Instructions

Perform the Diagnostic Repair Verification after completing the diagnostic procedure.

- GMLAN Wiring Repairs
- Control Module References for control module replacement, programming and setup

&#169© Copyright Chevrolet. All rights reserved

DTC U1876

Diagnostic Instructions

- Perform the Diagnostic System Check - Vehicle prior to using this diagnostic procedure.
- Review Strategy Based Diagnosis for an overview of the diagnostic approach.
- Diagnostic Procedure Instructions provides an overview of each diagnostic category.

DTC Descriptor

DTC U1876 00: Drive Motor Control Module 1 Lost Communication with Engine Control Module

Diagnostic Fault Information

Circuit	Short to Ground	Open/High Resistance	Short to Voltage	Signal Performance
B+	U1876*	U1876	--	--
Ignition	U1876*	U1876*	--	--
Accessory Wake Up Serial Data 2	P06E4*	U1876*	--	--
High Speed GMLAN Serial Data (+)	U0073*	U0073, U1876*	U0073*	--
High Speed GMLAN Serial Data (-)	U0073*	U0073, U1876*	U0073*	-
Powertrain High-Speed GMLAN Serial Data (+)	U0074*	U0074, U1876*	U0074*	-
Powertrain High-Speed GMLAN Serial Data (-)	U0074*	U0074, U1876*	U0074*	--
Ground	--	U1876*	--	--
* Other modules/DTCs may set with this fault and multiple symptoms including a no-start condition may occur.				

Circuit/System Description

Control modules connected to the serial data circuits monitor for serial data communications during normal vehicle operation. Operating information and commands are exchanged among the control modules. The control modules have prerecorded information about what messages are needed to be exchanged on the serial data circuits, for each virtual network. The messages are supervised and also, some periodic messages are used by the receiver module as an availability indication of the transmitter module. Each message contains the identification number of the transmitter module.

Conditions for Running the DTC

- The system voltage is greater than 9.5 V.
- The vehicle power mode master requires serial data communication to occur from this specific control module.

Conditions for Setting the DTC

A supervised periodic message that includes the transmitter module availability has not been received.

Action Taken When the DTC Sets

The DTC U1876 is a type B DTC.

Conditions for Clearing the DTC

The DTC U1876 is a type B DTC.

Diagnostic Aids

- Sometimes, while diagnosing a specific customer concern or after a repair, you may notice a history U-code present. However, there is no associated "current" or "active" status. Loss-of- communication U-codes such as these can set for a variety of reasons. Many times, they are transparent to the vehicle operator and technician, and/or have no associated symptoms. Eventually, they will erase themselves automatically after a number of fault-free ignition cycles. This condition would most likely be attributed to one of these scenarios:
  - A control module on the data communication circuit was disconnected while the communication circuit is awake.
  - Power to one or more control modules was interrupted during diagnosis.
  - A low battery condition was present, so some control modules stop communicating when battery voltage drops below a certain threshold.
  - Battery power was restored to the vehicle and control modules on the communication circuit did not all re-initialise at the same time.
  - If a loss-of-communication U-code appears in history for no apparent reason, it is most likely associated with one of the scenarios above. These are all temporary conditions and should never be interpreted as an intermittent fault, causing you to replace a part.
- A control module may have a U-code stored in history that does not require any repairs. Issues with late or corrupted messages between control modules can be temporary with no apparent symptom or complaint; this does not mean the control module is faulty. Do not replace a control module based only on a history U-code.
- Do not replace a control module reporting a U-code. The U-code identifies which control module needs to be diagnosed for a communication issue.
- Communication may be available between the control module and the scan tool with one or more GMLAN serial data systems inoperative. This condition is due to the control module using multiple GMLAN busses.
- Use Data Link References to determine what GMLAN serial data communications the non communicating control module uses.
- The control module may not have internal protection for specific control circuits and may open a B+ or ignition fuse. If a fuse is open and the B+ or ignition circuit is not shorted to earth, ensure none of the control circuits are shorted to earth before replacing the non communicating control module.

Reference Information

Schematic Reference

- Data Communication Schematics
- Control Module References

Connector End View Reference

Component Connector End Views

Description and Operation

Data Link Communications Description and Operation

Electrical Information Reference

- Circuit Testing
- Connector Repairs
- Testing for Intermittent Conditions and Poor Connections
- Wiring Repairs

Scan Tool Reference

Control Module References for scan tool information

Circuit/System Verification

1. Verify that DTC U0100 is not set.
   If the DTC is set, refer to DTC U0100-U02FF .
2. Verify that DTC U0073, U0074, P06E4, U1814, B1428, B1370, B1380, B1440, B1441, B1325, or P0562 is not set.
   If any of the DTCs are set, refer to Diagnostic Trouble Code (DTC) List - Vehicle .

Circuit/System Testing

Note: Use the schematic to identify the following:

- Control module locations on the high-speed GMLAN and powertrain high-speed GMLAN serial data circuits

- The control modules B+, ignition, earth, accessory wake-up serial data 2 and serial data circuit terminals

1. Vehicle OFF, disconnect the harness connector at the K20 engine control module (ECM).
2. Test for less than 10 Ω between each ground circuit terminal and ground.
   If greater than the specified range, test the ground circuit for an open/high resistance.
3. If equipped, vehicle in Service Mode, verify that a test lamp illuminates between each B+ circuit terminal and earth.
   If the test lamp does not illuminate, test the B+ circuit for a short to ground or an open/high resistance. If the circuit fuse is open, test the control circuits of the K20 ECM for a short-circuit to earth. If the circuits test normal, replace the K20 ECM.
4. If equipped, vehicle in Service Mode, verify that a test lamp illuminates between each ignition circuit terminal and earth.
   If the test lamp does not illuminate, test the ignition circuit for a short to ground or an open/high resistance. If the circuit fuse is open, test the control circuits of the K20 ECM for a short-circuit to earth. If the circuits test normal, replace the K20 ECM.
5. If equipped, vehicle in Service Mode, verify that a test lamp illuminates between the accessory wake-up serial data 2 circuit terminal and earth.
   If the test lamp does not illuminate, test the entire circuit, including the B+ circuit to the K114B hybrid powertrain control module 2, for an open-circuit/high resistance or short-circuit to earth. If the circuits test normal, replace the K114B hybrid powertrain control module 2.
6. Vehicle OFF, disconnect the X1 harness connector at the T6 power inverter module.
7. Vehicle OFF, and all vehicle systems OFF, all keys at least 3 metres away from vehicle, all access doors closed. It may take up to 2 minutes for all vehicle systems to power down. Test for less than 2 Ω in each high-speed GMLAN and powertrain high-speed GMLAN serial data circuit between the K20 ECM and the T6 power inverter module.
   If greater than the specified range, test the serial data circuit for an open-circuit/high resistance between the K20 ECM and the T6 power inverter module.
8. If all circuits test normal, replace the K20 ECM.

Repair Instructions

Perform the Diagnostic Repair Verification after completing the diagnostic procedure.

- GMLAN Wiring Repairs
- Control Module References for control module replacement, programming and setup

&#169© Copyright Chevrolet. All rights reserved

DTC U1879

Diagnostic Instructions

- Perform the Diagnostic System Check - Vehicle prior to using this diagnostic procedure.
- Review Strategy Based Diagnosis for an overview of the diagnostic approach.
- Diagnostic Procedure Instructions provides an overview of each diagnostic category.

DTC Descriptor

DTC U1879 00: Drive Motor Control Module 2 Lost Communication with Engine Control Module

Diagnostic Fault Information

Circuit	Short to Ground	Open/High Resistance	Short to Voltage	Signal Performance
B+	U1879*	U1879	--	--
Ignition	U1879*	U1879*	--	--
Accessory Wake Up Serial Data 2	P06E4*	U1879*	--	--
High Speed GMLAN Serial Data (+)	U0073*	U0073, U1879*	U0073*	--
High Speed GMLAN Serial Data (-)	U0073*	U0073, U1879*	U0073*	-
Powertrain High-Speed GMLAN Serial Data (+)	U0074*	U0074, U1879*	U0074*	-
Powertrain High-Speed GMLAN Serial Data (-)	U0074*	U0074, U1879*	U0074*	--
Ground	--	U1879*	--	--
* Other modules/DTCs may set with this fault and multiple symptoms including a no-start condition may occur.				

Circuit/System Description

Control modules connected to the serial data circuits monitor for serial data communications during normal vehicle operation. Operating information and commands are exchanged among the control modules. The control modules have prerecorded information about what messages are needed to be exchanged on the serial data circuits, for each virtual network. The messages are supervised and also, some periodic messages are used by the receiver module as an availability indication of the transmitter module. Each message contains the identification number of the transmitter module.

Conditions for Running the DTC

- The system voltage is greater than 9.5 V.
- The vehicle power mode master requires serial data communication to occur from this specific control module.

Conditions for Setting the DTC

A supervised periodic message that includes the transmitter module availability has not been received.

Action Taken When the DTC Sets

The DTC U1879 is a type B DTC.

Conditions for Clearing the DTC

The DTC U1879 is a type B DTC.

Diagnostic Aids

- Sometimes, while diagnosing a specific customer concern or after a repair, you may notice a history U-code present. However, there is no associated "current" or "active" status. Loss-of- communication U-codes such as these can set for a variety of reasons. Many times, they are transparent to the vehicle operator and technician, and/or have no associated symptoms. Eventually, they will erase themselves automatically after a number of fault-free ignition cycles. This condition would most likely be attributed to one of these scenarios:
  - A control module on the data communication circuit was disconnected while the communication circuit is awake.
  - Power to one or more control modules was interrupted during diagnosis.
  - A low battery condition was present, so some control modules stop communicating when battery voltage drops below a certain threshold.
  - Battery power was restored to the vehicle and control modules on the communication circuit did not all re-initialise at the same time.
  - If a loss-of-communication U-code appears in history for no apparent reason, it is most likely associated with one of the scenarios above. These are all temporary conditions and should never be interpreted as an intermittent fault, causing you to replace a part.
- A control module may have a U-code stored in history that does not require any repairs. Issues with late or corrupted messages between control modules can be temporary with no apparent symptom or complaint; this does not mean the control module is faulty. Do not replace a control module based only on a history U-code.
- Do not replace a control module reporting a U-code. The U-code identifies which control module needs to be diagnosed for a communication issue.
- Communication may be available between the control module and the scan tool with one or more GMLAN serial data systems inoperative. This condition is due to the control module using multiple GMLAN busses.
- Use Data Link References to determine what GMLAN serial data communications the non communicating control module uses.
- The control module may not have internal protection for specific control circuits and may open a B+ or ignition fuse. If a fuse is open and the B+ or ignition circuit is not shorted to earth, ensure none of the control circuits are shorted to earth before replacing the non communicating control module.

Reference Information

Schematic Reference

- Data Communication Schematics
- Control Module References

Connector End View Reference

Component Connector End Views

Description and Operation

Data Link Communications Description and Operation

Electrical Information Reference

- Circuit Testing
- Connector Repairs
- Testing for Intermittent Conditions and Poor Connections
- Wiring Repairs

Scan Tool Reference

Control Module References for scan tool information

Circuit/System Verification

1. Verify that DTC U0100 is not set.
   If the DTC is set, refer to DTC U0100-U02FF .
2. Verify that DTC U0073, U0074, P06E4, U1814, B1428, B1370, B1380, B1440, B1441, B1325, or P0562 is not set.
   If any of the DTCs are set, refer to Diagnostic Trouble Code (DTC) List - Vehicle .

Circuit/System Testing

Note: Use the schematic to identify the following:

- Control module locations on the high-speed GMLAN and powertrain high-speed GMLAN serial data circuits

- The control modules B+, ignition, earth, accessory wake-up serial data 2 and serial data circuit terminals

1. Vehicle OFF, disconnect the harness connector at the K20 engine control module (ECM).
2. Test for less than 10 Ω between each ground circuit terminal and ground.
   If greater than the specified range, test the ground circuit for an open/high resistance.
3. If equipped, vehicle in Service Mode, verify that a test lamp illuminates between each B+ circuit terminal and earth.
   If the test lamp does not illuminate, test the B+ circuit for a short to ground or an open/high resistance. If the circuit fuse is open, test the control circuits of the K20 ECM for a short-circuit to earth. If the circuits test normal, replace the K20 ECM.
4. If equipped, vehicle in Service Mode, verify that a test lamp illuminates between each ignition circuit terminal and earth.
   If the test lamp does not illuminate, test the ignition circuit for a short to ground or an open/high resistance. If the circuit fuse is open, test the control circuits of the K20 ECM for a short-circuit to earth. If the circuits test normal, replace the K20 ECM.
5. If equipped, vehicle in Service Mode, verify that a test lamp illuminates between the accessory wake-up serial data 2 circuit terminal and earth.
   If the test lamp does not illuminate, test the entire circuit, including the B+ circuit to the K114B hybrid powertrain control module 2, for an open-circuit/high resistance or short-circuit to earth. If the circuits test normal, replace the K114B hybrid powertrain control module 2.
6. Vehicle OFF, disconnect the X1 harness connector at the T6 power inverter module.
7. Vehicle OFF, and all vehicle systems OFF, all keys at least 3 metres away from vehicle, all access doors closed. It may take up to 2 minutes for all vehicle systems to power down. Test for less than 2 Ω in each high-speed GMLAN and powertrain high-speed GMLAN serial data circuit between the K20 ECM and the T6 power inverter module.
   If greater than the specified range, test the serial data circuit for an open-circuit/high resistance between the K20 ECM and the T6 power inverter module.
8. If all circuits test normal, replace the K20 ECM.

Repair Instructions

Perform the Diagnostic Repair Verification after completing the diagnostic procedure.

- GMLAN Wiring Repairs
- Control Module References for control module replacement, programming and setup

&#169© Copyright Chevrolet. All rights reserved

DTC U1885

Diagnostic Instructions

- Perform the Diagnostic System Check - Vehicle prior to using this diagnostic procedure.
- Review Strategy Based Diagnosis for an overview of the diagnostic approach.
- Diagnostic Procedure Instructions provides an overview of each diagnostic category.

DTC Descriptor

DTC U1885 00: Battery Energy Control Module Lost Communication with Hybrid Powertrain Control Module

Diagnostic Fault Information

Circuit	Short to Ground	Open/High Resistance	Short to Voltage	Signal Performance
B+	U1885*	U1885	--	--
Ignition	U1885*	U1885*	--	--
Accessory Wake Up Serial Data 2	P06E4, U1885*	U1885*	--	--
High Speed GMLAN Serial Data (+)	U0073*	U0073, U1885*	U0073*	--
High Speed GMLAN Serial Data (-)	U0073*	U0073, U1885*	U0073*	--
Ground	--	U1885*	--	--
* Other modules/DTCs may set with this fault and multiple symptoms including a no-start condition may occur.				

Circuit/System Description

Control modules connected to the serial data circuits monitor for serial data communications during normal vehicle operation. Operating information and commands are exchanged among the control modules. The control modules have prerecorded information about what messages are needed to be exchanged on the serial data circuits, for each virtual network. The messages are supervised and also, some periodic messages are used by the receiver module as an availability indication of the transmitter module. Each message contains the identification number of the transmitter module.

This diagnostic is used to check the loss of communication with hybrid powertrain control module 1 on high-speed GMLAN bus. The battery energy control module supervises

a periodic serial data message to check the communication status of the hybrid powertrain control module 1. If this message is not received within 3 seconds, then this DTC is set.

Conditions for Running the DTC

- Vehicle ON.
- The system voltage is at least 9 V.
- The DTC U180B is not set.

Conditions for Setting the DTC

A supervised periodic message that includes the transmitter module availability has not been received within 3 seconds.

Action Taken When the DTC Sets

The DTC U1885 is a type B DTC.

Conditions for Clearing the DTC

The DTC U1885 is a type B DTC.

Diagnostic Aids

- Sometimes, while diagnosing a specific customer concern or after a repair, you may notice a history U-code present. However, there is no associated "current" or "active" status. Loss-of- communication U-codes such as these can set for a variety of reasons. Many times, they are transparent to the vehicle operator and technician, and/or have no associated symptoms. Eventually, they will erase themselves automatically after a number of fault-free ignition cycles. This condition would most likely be attributed to one of these scenarios:
  - A control module on the data communication circuit was disconnected while the communication circuit is awake.
  - Power to one or more control modules was interrupted during diagnosis.
  - A low battery condition was present, so some control modules stop communicating when battery voltage drops below a certain threshold.
  - Battery power was restored to the vehicle and control modules on the communication circuit did not all re-initialise at the same time.
  - If a loss-of-communication U-code appears in history for no apparent reason, it is most likely associated with one of the scenarios above. These are all temporary conditions and should never be interpreted as an intermittent fault, causing you to replace a part.
- A control module may have a U-code stored in history that does not require any repairs. Issues with late or corrupted messages between control modules can be temporary with no apparent symptom or complaint; this does not mean the control module is faulty. Do not replace a control module based only on a history U-code.
- Do not replace a control module reporting a U-code. The U-code identifies which control module needs to be diagnosed for a communication issue.
- Communication may be available between the control module and the scan tool with one or more GMLAN serial data systems inoperative. This condition is due to the control module using multiple GMLAN busses.

- Use Data Link References to determine what GMLAN serial data communications the non communicating control module uses.
- The control module may not have internal protection for specific control circuits and may open a B+ or ignition fuse. If a fuse is open and the B+ or ignition circuit is not shorted to earth, ensure none of the control circuits are shorted to earth before replacing the non communicating control module.

Reference Information

Schematic Reference

- Data Communication Schematics
- Control Module References

Connector End View Reference

Component Connector End Views

Description and Operation

Data Link Communications Description and Operation

Electrical Information Reference

- Circuit Testing
- Connector Repairs
- Testing for Intermittent Conditions and Poor Connections
- Wiring Repairs

Scan Tool Reference

Control Module References for scan tool information

Circuit/System Verification

1. Verify that DTC U0293 is not set.
   If the DTC is set, refer to DTC U0100-U02FF .
2. Verify that DTC U0073, P06E4, U1814, U2611, B1428, B1370, B1380, B1440, B1441, B1325, or P0562 is not set.
   If any of the DTCs are set, refer to Diagnostic Trouble Code (DTC) List - Vehicle .

Circuit/System Testing

Note: Use the schematic to identify the following:

- Control module location on the high-speed GMLAN serial data circuits
- The control module B+, ignition, earth, accessory wake-up serial data 2 and serial data circuit terminals

1. Vehicle OFF, disconnect the X1 and X2 harness connectors at the T6 power inverter module.
2. Test for less than 5 Ω between the T6 power inverter module case and earth.
   If greater than the specified range, test the earth strap for an open-circuit/high resistance.
3. If equipped, vehicle in Service Mode, verify that a test lamp illuminates between each B+ circuit terminal and earth.
   If the test lamp does not illuminate, test the B+ circuit for a short to ground or an open/high resistance. If the circuit fuse is open, test the control circuits of the T6 power inverter module for a short-circuit to earth. If the circuits test normal, replace the T6 power inverter module.
4. If equipped, vehicle in Service Mode, verify that a test lamp illuminates between each ignition circuit terminal and earth.
   If the test lamp does not illuminate, test the ignition circuit for a short to ground or an open/high resistance. If the circuit fuse is open, test the control circuits of the T6 power inverter module for a short-circuit to earth. If the circuits test normal, replace the T6 power inverter module.
5. If equipped, vehicle in Service Mode, verify that a test lamp illuminates between the accessory wake-up serial data 2 circuit terminal and earth.
   If the test lamp does not illuminate, test the entire circuit, including the B+ circuit to the K114B hybrid powertrain control module 2, for an open-circuit/high resistance or short-circuit to earth. If the circuits test normal, replace the K114B hybrid powertrain control module 2.
6. Vehicle OFF, disconnect the X2 harness connector at the A4 hybrid battery pack.
7. Vehicle OFF, and all vehicle systems OFF, all keys at least 3 metres away from vehicle, all access doors closed. It may take up to 2 minutes for all vehicle systems to power down. Test for less than 2 Ω in each high-speed GMLAN serial data circuit between the T6 power inverter module and the A4 hybrid battery pack.
   If greater than the specified range, test the serial data circuit for an open-circuit/high resistance between the T6 power inverter module and the A4 hybrid battery pack.
8. If all circuits test normal, replace the T6 power inverter module.
9. If the DTC resets, replace the A4 hybrid/EV battery pack.

Repair Instructions

Perform the Diagnostic Repair Verification after completing the diagnostic procedure.

- GMLAN Wiring Repairs
- Drive Motor Battery Replacement and Shipping Preparation
- Control Module References for control module replacement, programming and setup

&#169© Copyright Chevrolet. All rights reserved

DTC U18B9-U18BF

Diagnostic Instructions

- Perform the Diagnostic System Check - Vehicle prior to using this diagnostic procedure.
- Review Strategy Based Diagnosis for an overview of the diagnostic approach.
- Diagnostic Procedure Instructions provides an overview of each diagnostic category.

DTC Descriptor

DTC U18B9: Primary High Speed CAN Bus Subnet Configuration List

DTC U18BF: Secondary High Speed CAN Bus Subnet Configuration List

Circuit/System Description

Control modules on the high-speed GMLAN serial data bus and the chassis high-speed GMLAN serial data bus must be programmed with software that specifically identifies the correct type and quantity of control modules on the bus based on RPO configuration. If a control module was not properly configured after installation, the appropriate U Code may be set for that control module. No external circuit diagnosis is involved.

Conditions for Running the DTC

- Voltage supplied to the control module is in the normal operating voltage range.
- The vehicle power mode requires serial data communication to occur.

Conditions for Setting the DTC

- The control module is not configured properly.
- Control unit recognises a programming error.
- CAN-Bus configuration is invalid

Conditions for Clearing the DTC

- A current DTC clears when the malfunction is no longer present.
- A history DTC clears when the module ignition cycle counter reaches the reset threshold, without a repeat of the malfunction.

Reference Information

Schematic Reference

Data Communication Schematics

Connector End View Reference

Component Connector End Views

Description and Operation

Data Link Communications Description and Operation

Electrical Information Reference

- Circuit Testing
- Connector Repairs
- Testing for Intermittent Conditions and Poor Connections
- Wiring Repairs

Scan Tool References

Control Module References for scan tool information

Circuit/System Verification

1. Verify the appropriate DTC is not set.
   If the DTC is set along with other codes, diagnose all other codes first. If no other codes are set, program the control module that set the DTC.
2. With a scan tool, clear the DTCs.
3. Vehicle OFF, remove the scan tool, open and close the drivers door.
4. Wait 60 seconds, then verify the DTC is not set.
   If the DTC is set, replace the appropriate control module.

Repair Instructions

Perform the Diagnostic Repair Verification after completing the diagnostic procedure.

Control Module References for control module replacement, setup, and programming

&#169© Copyright Chevrolet. All rights reserved

DTC U2099

Diagnostic Instructions

- Perform the Diagnostic System Check - Vehicle prior to using this diagnostic procedure.
- Review Strategy Based Diagnosis for an overview of the diagnostic approach.
- Diagnostic Procedure Instructions provides an overview of each diagnostic category.

DTC Descriptor

DTC U2099 00: High Speed Communication Enable Circuit

DTC U2099 01: High Speed Communication Enable Circuit Short to Battery

DTC U2099 02: High Speed Communication Enable Circuit Short to Ground

DTC U2099 04: High Speed Communication Enable Circuit Open

DTC U2099 5A: High Speed Communication Enable Circuit Not Plausible

Diagnostic Fault Information

Circuit	Short to Ground	Open/High Resistance	Short to Voltage	Signal Performance
Serial Data Communication Enable	U2099, U0100-U02FF[1]	U0100-U02FF	U0100-U02FF[2]	-

[1] Vehicle will not start.

[2] History only. If cleared the DTC will return after several ignition cycles.

Circuit/System Description

The body control module (BCM) activates the serial data communication enable circuit, when the vehicle is ON. The serial data communication enable circuit wakes up the control modules for serial data bus communication.

Conditions for Running the DTC

- The system voltage is between 9-16 volts.
- The vehicle power mode master requires serial data communication to occur.

Conditions for Setting the DTC

The BCM senses a short to ground on the serial data communication enable circuit.

Action Taken When the DTC Sets

- The output command is turned off while the malfunction is present.
- The control modules use a default value for the missing parameters until the next ignition cycle.
- The control module(s) is never signalled, therefore the specific subsystem(s) will not function.
- The vehicle will not start while the circuit is shorted to ground.

Conditions for Clearing the DTC

- A current DTC clears when the malfunction is no longer present.
- A history DTC clears when the module ignition cycle counter reaches the reset threshold of 50, without a repeat of the malfunction.

Diagnostic Aids

- Use the DMM MIN/MAX function to capture/locate intermittent conditions.
- Short to ground will also set multiple history no communication codes for GMLAN high speed modules.

Reference Information

Schematic Reference

Data Communication Schematics

Connector End View Reference

Component Connector End Views

Description and Operation

Data Link Communications Description and Operation

Electrical Information Reference

- Circuit Testing
- Connector Repairs
- Testing for Intermittent Conditions and Poor Connections
- Wiring Repairs

Circuit/System Testing

Note: Use the schematic to determine which control modules are on the BCM serial data communications enable circuit 23, X4.

1. Vehicle OFF, disconnect the harness connector at the most easily accessible control module on the K9 BCM serial data communication enable circuit.
2. Vehicle in Service Mode, retest for current DTCs. DTC U2099 should remain current.
   If the DTC becomes history, replace the control module that was just disconnected.
3. With the prior control modules disconnected, repeat steps 1 and 2 for each control module on the circuit except the K9 BCM.
4. Vehicle OFF, disconnect the X4 harness connector at the K9 BCM.
5. Test for infinite resistance between the serial data communication enable circuit terminal 23 X4 and ground.
   If less than infinite resistance, repair the serial data communication enable circuit for a short-circuit to earth.
6. If all circuits tests normal, replace the K9 BCM.

Repair Instructions

Perform the Diagnostic Repair Verification after completing the diagnostic procedure.

Control Module References for module replacement, setup, and programming

&#169© Copyright Chevrolet. All rights reserved

DTC U2101

Diagnostic Instructions

- Perform the Diagnostic System Check - Vehicle prior to using this diagnostic procedure.
- Review Strategy Based Diagnosis for an overview of the diagnostic approach.
- Diagnostic Procedure Instructions provides an overview of each diagnostic category.

DTC Descriptor

DTC U2101: CAN Bus Maximum Configuration List

Circuit/System Description

Some control modules must be programmed with software that specifically identifies the correct type and quantity of control modules on the serial data bus based on RPO configuration. If a control module was not properly configured after installation, the appropriate U Code may be set for that control module. No external circuit diagnosis is involved.

Conditions for Running the DTC

- Voltage supplied to the control module is in the normal operating voltage range.
- The vehicle power mode requires serial data communication to occur.

Conditions for Setting the DTC

- The control module is not configured properly.
- Control unit recognises a programming error.
- CAN-Bus configuration is invalid

Conditions for Clearing the DTC

- A current DTC clears when the malfunction is no longer present.

- A history DTC clears when the control module ignition cycle counter reaches the reset threshold, without a repeat of the malfunction.

Reference Information

Schematic Reference

Data Communication Schematics

Connector End View Reference

Component Connector End Views

Description and Operation

Data Link Communications Description and Operation

Electrical Information Reference

- Circuit Testing
- Connector Repairs
- Testing for Intermittent Conditions and Poor Connections
- Wiring Repairs

Scan Tool References

Control Module References for scan tool information

Circuit/System Verification

1. Verify the appropriate DTC is not set.
   If the DTC is set along with other codes, diagnose all other codes first. If no other codes are set, program the control module specified by the DTC descriptor.
2. With a scan tool, clear the DTCs.
3. Vehicle OFF, remove the scan tool, open and close the drivers door.
4. Wait 60 seconds, then verify the DTC is not set.
   If the DTC is set, replace the appropriate control module.

Repair Instructions

Perform the Diagnostic Repair Verification after completing the diagnostic procedure.

Control Module References for control module replacement, setup, and programming

&#169© Copyright Chevrolet. All rights reserved

DTC U2103

Diagnostic Instructions

- Perform the Diagnostic System Check - Vehicle prior to using this diagnostic procedure.
- Review Strategy Based Diagnosis for an overview of the diagnostic approach.
- Diagnostic Procedure Instructions provides an overview of each diagnostic category.

DTC Descriptor

DTC U2103 00: Fewer Controllers On Than Programmed

Circuit Description

Control modules connected to the GMLAN serial data circuits monitor for serial data communications during normal vehicle operation. Operating information and commands are exchanged among the control modules. The control modules have programmed information about what messages are needed to be exchanged on the serial data circuits, for each virtual network. The messages are also supervised and some periodic messages are used by the receiver module as an availability indication of the transmitter module.

DTC U2103 will set when fewer modules are detected on the bus before the control modules can learn the other control module IDs. If the communication bus is opened, or if the control module power supply is lost when the vehicle is in the OFF power mode, and then placed in the ON power mode, U2103 will set in specific control modules.

Conditions for Running the DTCs

- Voltage supplied to the control modules is in the normal operating voltage range.
- The vehicle power mode requires serial data communication to occur.
- The DTC U2100 does not have a current status.

Conditions for Setting the DTC

A supervised periodic message that includes the transmitter module availability has not been received.

Action Taken When the DTC Sets

The control module uses a default value for the missing parameter.

Conditions for Clearing the DTC

- A current DTC clears when the malfunction is no longer present.
- A history DTC clears when the module ignition cycle counter reaches the reset threshold, without a repeat of the malfunction.

Diagnostic Aids

- Diagnosis of this DTC is accomplished via the symptom or an additional DTC. Refer to Symptoms - Data Communications or DTC U0100-U02FF .
- An intermittent condition is likely to be caused by a short on the GMLAN serial data circuits. Use the DTC U0100-U02FF procedure in order to isolate an intermittent condition.

&#169© Copyright Chevrolet. All rights reserved

DTC U2105-U2199

Diagnostic Instructions

- Perform the Diagnostic System Check - Vehicle prior to using the diagnostic procedure.
- Review Strategy Based Diagnosis for an overview of the diagnostic approach.
- Diagnostic Procedure Instructions provides an overview of each diagnostic category.

DTC Descriptor

Refer to Control Module U Code List .

Diagnostic Fault Information

Circuit	Short to Ground	Open/High Resistance	Short to Voltage	Signal Performance
Module B+	U2105-U2199	U2105-U2199	--	--
Module Ignition	U2105-U2199	U2105-U2199	--	--
Accessory Wakeup Serial Data	U1814	U2105-U2199	--	--
Serial Data Communication Enable	U2099	U2105-U2199	--	--
Accessory Wake Up Serial Data 2	P06E4	U2105-U2199	--	--
Low Speed GMLAN Serial Data	1	U2105-U2199	1	--
High Speed GMLAN Serial Data (+)	2	U2105-U2199	2	--
High Speed GMLAN Serial Data (-)	2	U2105-U2199	2	--
Chassis High Speed GMLAN Serial Data (+)	3	U2105-U2199	3	-
Chassis High Speed GMLAN Serial Data (-)	3	U2105-U2199	3	--
Module Ground	-	U2105-U2199	--	--
1. Scan tool does not communicate with low speed GMLAN device 2. Scan tool does not communicate with high speed GMLAN device 3. Scan tool does not communicate with chassis high speed GMLAN device				

Circuit/System Description

Control modules connected to the high and low speed GMLAN serial data circuits monitor for serial data communications during normal vehicle operation. Operating information and commands are exchanged among the control modules. The control modules have prerecorded information about what messages are needed to be exchanged on the serial data circuits, for each virtual network. The messages are supervised and also, some periodic messages are used by the receiver module as an availability indication of the transmitter module. Each message contains the identification number of the transmitter module.

Conditions for Running the DTC

- The system voltage is between 9–16 V.
- The vehicle power mode requires serial data communication to occur.

Conditions for Setting the DTC

A supervised periodic message that includes the transmitter module availability has not been received.

Action Taken When the DTC Sets

The control module uses a default value for the missing parameters.

Conditions for Clearing the DTC

- A current DTC clears when the malfunction is no longer present.
- A history DTC clears when the control module ignition cycle counter reaches the reset threshold of 50, without a repeat of the malfunction.

Diagnostic Aids

- Sometimes, while diagnosing a specific customer concern or after a repair, you may notice a history U-code present. However, there is no associated "current" or "active" status. Loss-of- communication U-codes such as these can set for a variety of reasons. Many times, they are transparent to the vehicle operator and technician, and/or have no associated symptoms. Eventually, they will erase themselves automatically after a number of fault-free ignition cycles. This condition would most likely be attributed to one of these scenarios:
  - A control module on the data communication circuit was disconnected while the communication circuit is awake.
  - Power to one or more control modules was interrupted during diagnosis.
  - A low battery condition was present, so some control modules stop communicating when battery voltage drops below a certain threshold.
  - Battery power was restored to the vehicle and control modules on the communication circuit did not all re-initialise at the same time.
  - If a loss-of-communication U-code appears in history for no apparent reason, it is most likely associated with one of the scenarios above. These are all temporary conditions and should never be interpreted as an intermittent fault, causing you to replace a part.
- A control module may have a U-code stored in history that does not require any repairs. Issues with late or corrupted messages between control modules can be

temporary with no apparent symptom or complaint; this does not mean the control module is faulty. Do not replace a control module based only on a history U-code.

- Do not replace a control module reporting a U-code. The U-code identifies which control module needs to be diagnosed for a communication issue.
- Use Data Link References to determine what GMLAN serial data communications the non communicating control module uses.
- Some control modules may not have internal protection for specific voltage outputs and may open a battery positive voltage or ignition voltage source fuse. If a voltage input fuse is open and no short is found in that circuit, ensure that no control module output voltage circuit is shorted to ground before replacing the control module.
- Some intermittent communication concerns may be caused by fretting corrosion on the serial data circuit terminals. Inspect all connectors at the control module that set the communication DTC, the control module that the communication DTC was set against and any in-line harness connectors between the two control modules. Do not replace a control module based only on fretting corrosion. Refer to bulletin 09-06-03-004 for assistance with the diagnosis and repair of this condition..
- This diagnostic can be used for any control module that should communicate with high or low speed GMLAN serial data providing the vehicle is equipped with the option that uses that control module.

Reference Information

- Data Communication Schematics
- Control Module References

Connector End View Reference

Component Connector End Views

Description and Operation

Data Link Communications Description and Operation

Electrical Information Reference

- Circuit Testing
- Connector Repairs
- Testing for Intermittent Conditions and Poor Connections
- Wiring Repairs

Scan Tool References

Control Module References for scan tool information

Circuit/System Verification

1. Determine the control module that is not communicating. Refer to Control Module U Code List .
2. Verify that DTC U0073, U0074, U0077, U0078, U007A, P06E4, P1EB9, U1814, U2099, B1325, B1330, B1370, B1380, B1424, B1428, B1440, B1441, B1517, C0800,

C0899, C12E1, P0560, or P0562 is not set.

If any of the DTCs are set, refer to Diagnostic Trouble Code (DTC) List - Vehicle .

Circuit/System Testing

Note: Terminal and connector identifiers will be different depending on the individual control module being tested. Use Schematic Reference and Connector End View Reference to determine the control module's connector and B+, ignition, earth, accessory wake-up serial data, accessory wake-up serial data 2, serial data communication enable and serial data circuit terminals.

1. Vehicle OFF, disconnect the harness connector at the control module that is not communicating.
2. Test for less than 10 Ω between each ground circuit terminal and ground.
   If greater than specified range, test the ground circuit for an open/high resistance.
3. If equipped, vehicle in Service Mode, verify that a test lamp illuminates between each B+ circuit terminal and earth.
   If the test lamp does not illuminate, test the B+ circuit for a short to ground or an open/high resistance. If the circuit fuse is open, test the control circuits of the control module for a short to ground. If the circuits test normal, replace the appropriate control module.
4. If equipped, vehicle in Service Mode, verify that a test lamp illuminates between each ignition circuit terminal and earth.
   If the test lamp does not illuminate, test the ignition circuit for a short to ground or an open/high resistance. If the circuit fuse is open, test the control circuits of the control module for a short to ground. If the circuits test normal, replace the appropriate control module.

   Note: Only the high-speed GMLAN modules have a serial data communication enable circuit OR an accessory wake-up serial data circuit OR an accessory wake-up serial data 2 circuit. Either the K9 body control module or the K114B hybrid power train control module 2 is the output for these circuits. Refer to the control module schematics to identify which control modules have these circuits and which control module is the output for these circuits. If the control module that is not communicating does not have any of these circuits, proceed to the next step.

5. If equipped, vehicle in Service Mode, verify that a test lamp illuminates between the serial data communication enable circuit terminal OR the accessory wake-up serial data circuit terminal coming from the K9 body control module and earth.
   If the test lamp does not illuminate, test the entire circuit, including the B+ circuit to the K9 body control module, for an open-circuit/high resistance or short-circuit to earth. If the circuits test normal, replace the K9 body control module.
6. If equipped, vehicle in Service Mode, verify that a test lamp illuminates between the accessory wake-up serial data 2 circuit terminal coming from K114B hybrid powertrain control module 2 and earth.
   If the test lamp does not illuminate, test the entire circuit, including the B+ circuit to the K114B hybrid powertrain control module 2, for an open-circuit/high resistance or short-circuit to earth. If the circuits test normal, replace the K114B hybrid powertrain control module 2.
7. Vehicle OFF, disconnect the harness connector at the control module setting the DTC.
8. Vehicle OFF, all access doors closed, all vehicle systems OFF, and all keys at least 3 metres away from vehicle. It may take up to 2 minutes for all vehicle systems to power down. Test for less than 2 Ω in each GMLAN serial data circuit between the non-communicating control module and the control module setting the DTC.
   If greater than the specified range, test the serial data circuit for an open-circuit/high resistance between the non communicating control module and the control module setting the DTC.
9. If all circuits test normal, replace the control module that is not communicating.

Repair Instructions

Perform the Diagnostic Repair Verification after completing the diagnostic procedure.

- GMLAN Wiring Repairs
- Control Module References for control module replacement, setup, and programming

&#169© Copyright Chevrolet. All rights reserved

DTC U2401

Diagnostic Instructions

- Perform the Diagnostic System Check - Vehicle prior to using this diagnostic procedure.
- Review Strategy Based Diagnosis for an overview of the diagnostic approach.
- Diagnostic Procedure Instructions provides an overview of each diagnostic category.

DTC Descriptor

DTC U2401 00: Battery Energy Control Module Dedicated Bus 1 Off

Diagnostic Fault Information

Circuit	Short to Ground	Open/High Resistance	Short to Voltage	Signal Performance
BECM Dedicated Serial Data (+)	U2401	U2401, U2603-U2606	U2401	-
BECM Dedicated Serial Data (-)	U2401	U2401, U2603-U2606	U2401	--

Circuit/System Description

The battery energy control module (BECM) dedicated bus is a communication bus used to communicate between the BECM and the hybrid battery interface control modules inside the hybrid battery pack assembly. The BECM dedicated bus does not communicate with the scan tool.

This diagnostic is used to check the internal BECM dedicated bus off. If the transmit error counter of a bus is greater than 255 (carry condition in case of an 8-bit transmit error counter) then the supervisor requests the physical layer to set the bus into the "Bus Off" state. At this time, the battery energy control module increases its fail count. When this fail count is over X Cal Value (7) during Y Cal Value (10 samples), this fail code will happen.

Conditions for Running the DTC

- Vehicle ON.
- The system voltage is at least 9 V.

Conditions for Setting the DTC

The control module setting the DTC has received too many transmit errors on the BECM dedicated serial data circuits.

Action Taken When the DTC Sets

- DTC U2401 is a type A DTC.
- The battery energy control module sends all hybrid battery interface control module data to Invalid, 0 V, and -40°C (-40°F) on high-voltage energy high-speed GMLAN bus.

Conditions for Clearing the DTC

- DTC U2401 is a type A DTC.
- No bus-off status.

Diagnostic Aids

- Sometimes, while diagnosing a specific customer concern or after a repair, you may notice a history U-code present. However, there is no associated "current" or "active" status. Loss-of- communication U-codes such as these can set for a variety of reasons. Many times, they are transparent to the vehicle operator and technician, and/or have no associated symptoms. Eventually, they will erase themselves automatically after a number of fault-free ignition cycles. This condition would most likely be attributed to one of these scenarios:
  - A control module on the data communication circuit was disconnected while the communication circuit is awake.
  - Power to one or more control modules was interrupted during diagnosis.
  - A low battery condition was present, so some control modules stop communicating when battery voltage drops below a certain threshold.
  - Battery power was restored to the vehicle and control modules on the communication circuit did not all re-initialise at the same time.
  - If a loss-of-communication U-code appears in history for no apparent reason, it is most likely associated with one of the scenarios above. These are all temporary conditions and should never be interpreted as an intermittent fault, causing you to replace a part.
- Do not replace a control module reporting a U-code. The U-code identifies which control module needs to be diagnosed for a communication issue.
- The engine will not start when there is a total malfunction of the BECM dedicated bus.
- Technicians may find various Local Area Network (LAN) communication Diagnostic Trouble Codes (DTC) with the scan tool.

Reference Information

Schematic Reference

- Data Communication Schematics
- Hybrid Energy Storage Schematics

- Control Module References

Connector End View Reference

Component Connector End Views

Description and Operation

Data Link Communications Description and Operation

Electrical Information Reference

- Circuit Testing
- Connector Repairs
- Testing for Intermittent Conditions and Poor Connections
- Wiring Repairs

Scan Tool Reference

Control Module References for scan tool information

Circuit/System Verification

Verify that DTC U2401 is not set.

If the DTC is set, replace the A4 hybrid/EV battery pack.

Repair Instructions

Perform the Diagnostic Repair Verification after completing the diagnostic procedure.

- Drive Motor Battery Replacement and Shipping Preparation
- Control Module References for control module replacement, programming and setup

&#169© Copyright Chevrolet. All rights reserved

DTC U2602

Diagnostic Instructions

- Perform the Diagnostic System Check - Vehicle prior to using this diagnostic procedure.
- Review Strategy Based Diagnosis for an overview of the diagnostic approach.
- Diagnostic Procedure Instructions provides an overview of each diagnostic category.

DTC Descriptor

DTC U2602 00: Battery Energy Control Module Lost Communication with Hybrid Powertrain Control Module 2

Diagnostic Fault Information

Circuit	Short to Ground	Open/High Resistance	Short to Voltage	Signal Performance
B+	U2602	U2602	--	--
Ignition	U2602	U2602	--	--
Accessory Wake Up Serial Data	U1814	U2602	--	--
High Speed GMLAN Serial Data (+)	U0073*	U0073, U2602*	U0073*	--
High Speed GMLAN Serial Data (-)	U0073*	U0073, U2602*	U0073*	--
Ground	--	U2602	--	--
* Scan Tool Does Not Communicate With High-Speed GMLAN Device				

Circuit/System Description

Control modules connected to the serial data circuits monitor for serial data communications during normal vehicle operation. Operating information and commands are exchanged among the control modules. The control modules have prerecorded information about what messages are needed to be exchanged on the serial data circuits, for each virtual network. The messages are supervised and also, some periodic messages are used by the receiver module as an availability indication of the transmitter module. Each message contains the identification number of the transmitter module.

This diagnostic is used to check the loss of communication with the hybrid powertrain control module 2 on high-speed GMLAN bus. The battery energy control module

supervises a periodic serial data message to check the communication status of the hybrid powertrain control module 2. If this message is not received within 400 ms, the battery energy control module increases its fail count. When this fail count is over X Cal Value (7) during Y Cal Value (10 samples), the diagnostic status of this code is set to Failed and transmitted over high-voltage energy high-speed GMLAN bus to the hybrid powertrain control module 2.

Conditions for Running the DTC

- Vehicle ON.
- The system voltage is at least 9 V.
- The DTC U180B is not set.

Conditions for Setting the DTC

A supervised periodic message that includes the transmitter module availability has not been received within 400 ms.

Action Taken When the DTC Sets

The DTC U2602 is a type B DTC.

Conditions for Clearing the DTC

The DTC U2602 is a type B DTC.

Diagnostic Aids

- Sometimes, while diagnosing a specific customer concern or after a repair, you may notice a history U-code present. However, there is no associated "current" or "active" status. Loss-of- communication U-codes such as these can set for a variety of reasons. Many times, they are transparent to the vehicle operator and technician, and/or have no associated symptoms. Eventually, they will erase themselves automatically after a number of fault-free ignition cycles. This condition would most likely be attributed to one of these scenarios:
  - A control module on the data communication circuit was disconnected while the communication circuit is awake.
  - Power to one or more control modules was interrupted during diagnosis.
  - A low battery condition was present, so some control modules stop communicating when battery voltage drops below a certain threshold.
  - Battery power was restored to the vehicle and control modules on the communication circuit did not all re-initialise at the same time.
  - If a loss-of-communication U-code appears in history for no apparent reason, it is most likely associated with one of the scenarios above. These are all temporary conditions and should never be interpreted as an intermittent fault, causing you to replace a part.
- A control module may have a U-code stored in history that does not require any repairs. Issues with late or corrupted messages between control modules can be temporary with no apparent symptom or complaint; this does not mean the control module is faulty. Do not replace a control module based only on a history U-code.
- Do not replace a control module reporting a U-code. The U-code identifies which control module needs to be diagnosed for a communication issue.
- Communication may be available between the control module and the scan tool with one or more GMLAN serial data systems inoperative. This condition is due to the

control module using multiple GMLAN busses.
- Use Data Link References to determine what GMLAN serial data communications the non communicating control module uses.
- The control module may not have internal protection for specific control circuits and may open a B+ or ignition fuse. If a fuse is open and the B+ or ignition circuit is not shorted to earth, ensure none of the control circuits are shorted to earth before replacing the non communicating control module.

Reference Information

Schematic Reference

- Data Communication Schematics
- Control Module References

Connector End View Reference

Component Connector End Views

Description and Operation

Data Link Communications Description and Operation

Electrical Information Reference

- Circuit Testing
- Connector Repairs
- Testing for Intermittent Conditions and Poor Connections
- Wiring Repairs

Scan Tool Reference

Control Module References for scan tool information

Circuit/System Verification

Verify that DTC U0073, U1814, B1428, B1370, B1380, B1440, B1441, B1325 or P0562 is not set.

If any of the DTCs are set, refer to Diagnostic Trouble Code (DTC) List - Vehicle to diagnose those DTCs prior to this diagnostic.

Circuit/System Testing

Note: Use the schematic to identify the following:

- The control module locations on the high-speed GMLAN and high- voltage energy GMLAN serial data circuits
- The control module B+, ignition, earth, accessory wake-up serial data and serial data circuit terminals

1. Vehicle OFF, disconnect the harness connector at the K114B hybrid powertrain control module 2.
2. Test for less than 10 Ω between each ground circuit terminal and ground.
   If greater than the specified range, test the ground circuit for an open/high resistance.
3. If equipped, vehicle in Service Mode, verify that a test lamp illuminates between each B+ circuit terminal and earth.
   If the test lamp does not illuminate, test the B+ circuit for a short to ground or an open/high resistance. If the circuit fuse is open, test the control circuits of the K114B hybrid powertrain control module 2 for a short-circuit to earth. If the circuits test normal, replace the K114B hybrid powertrain control module 2.
4. If equipped, vehicle in Service Mode, verify that a test lamp illuminates between each ignition circuit terminal and earth.
   If the test lamp does not illuminate, test the ignition circuit for a short to ground or an open/high resistance. If the circuit fuse is open, test the control circuits of the K114B hybrid powertrain control module 2 for a short-circuit to earth. If the circuits test normal, replace the K114B hybrid powertrain control module 2.
5. If equipped, vehicle in Service Mode, verify that a test lamp illuminates between the accessory wake up serial data circuit terminal and earth.
   If the test lamp does not illuminate, test the entire circuit, including the B+ circuit to the K9 body control module (BCM), for an open-circuit/high resistance or a short-circuit to earth. If the circuits test normal, replace the K9 BCM.
6. Vehicle OFF, disconnect the X1 and X2 harness connectors at the A4 hybrid battery pack.
7. Vehicle OFF, and all vehicle systems OFF, all keys at least 3 metres away from vehicle, all access doors closed. It may take up to 2 minutes for all vehicle systems to power down. Test for less than 2 Ω in each high-speed GMLAN serial data circuit between the K114B hybrid powertrain control module 2 and the A4 hybrid battery pack.
   If greater than the specified range, test the serial data circuit for an open-circuit/high resistance between the K114B hybrid powertrain control module 2 and the A4 hybrid battery pack.
8. If all circuits test normal, replace the K114B hybrid powertrain control module 2.
9. If the DTC resets, replace the A4 hybrid/EV battery pack.

Repair Instructions

Perform the Diagnostic Repair Verification after completing the diagnostic procedure.

- GMLAN Wiring Repairs
- Drive Motor Battery Replacement and Shipping Preparation
- Control Module References for control module replacement, programming and setup

&#169© Copyright Chevrolet. All rights reserved

DTC U2603

Diagnostic Instructions

- Perform the Diagnostic System Check - Vehicle prior to using this diagnostic procedure.
- Review Strategy Based Diagnosis for an overview of the diagnostic approach.
- Diagnostic Procedure Instructions provides an overview of each diagnostic category.

DTC Descriptor

DTC U2603 00: Battery Energy Control Module Lost Communication with Hybrid/EV Battery Interface Control Module 1

Diagnostic Fault Information

Circuit	Short to Ground	Open/High Resistance	Short to Voltage	Signal Performance
5 V Reference	U2603	U2603	--	--
High-Voltage Fault Signal	U2603	U2603	--	--
BECM Dedicated Serial Data (+)	U2401	U2401, U2603	U2401	-
BECM Dedicated Serial Data (-)	U2401	U2401, U2603	U2401	-
Low Reference	-	U2603	--	--

Circuit/System Description

Control modules connected to the serial data circuits monitor for serial data communications during normal vehicle operation. Operating information and commands are exchanged among the control modules. The control modules have prerecorded information about what messages are needed to be exchanged on the serial data circuits, for each virtual network. The messages are supervised and also, some periodic messages are used by the receiver module as an availability indication of the transmitter module. Each message contains the identification number of the transmitter module.

The scan tool does not communicate the hybrid battery interface control module 1 on battery energy control module dedicated bus.

Conditions for Running the DTC

- The control module is awake and communicating.
- The system voltage is at least 9 V.

Conditions for Setting the DTC

There is no temperature report message from hybrid battery interface control module 1 to battery energy control module within 4 seconds.

Action Taken When the DTC Sets

- Cell voltage or cell temperature corresponding to hybrid battery interface control module 1 will be reported by the battery energy control module to the hybrid powertrain control module 2 as 0 V or -40°C (-40°F).
- The DTC U2603 is a type A DTC.

Conditions for Clearing the DTC

The DTC U2603 is a type A DTC.

Diagnostic Aids

- Sometimes, while diagnosing a specific customer concern or after a repair, you may notice a history U-code present. However, there is no associated "current" or "active" status. Loss-of- communication U-codes such as these can set for a variety of reasons. Many times, they are transparent to the vehicle operator and technician, and/or have no associated symptoms. Eventually, they will erase themselves automatically after a number of fault-free ignition cycles. This condition would most likely be attributed to one of these scenarios:
  - A control module on the data communication circuit was disconnected while the communication circuit is awake.
  - Power to one or more control modules was interrupted during diagnosis.
  - A low battery condition was present, so some control modules stop communicating when battery voltage drops below a certain threshold.
  - Battery power was restored to the vehicle and control modules on the communication circuit did not all re-initialise at the same time.
  - If a loss-of-communication U-code appears in history for no apparent reason, it is most likely associated with one of the scenarios above. These are all temporary conditions and should never be interpreted as an intermittent fault, causing you to replace a part.
- A control module may have a U-code stored in history that does not require any repairs. Issues with late or corrupted messages between control modules can be temporary with no apparent symptom or complaint; this does not mean the control module is faulty. Do not replace a control module based only on a history U-code.
- Do not replace a control module reporting a U-code. The U-code identifies which control module needs to be diagnosed for a communication issue.
- Communication may be available between the control module and the scan tool with one or more GMLAN serial data systems inoperative. This condition is due to the control module using multiple GMLAN busses.
- Use Data Link References to determine what GMLAN serial data communications the non communicating control module uses.
- The control module may not have internal protection for specific control circuits and may open a B+ or ignition fuse. If a fuse is open and the B+ or ignition circuit is not shorted to earth, ensure none of the control circuits are shorted to earth before replacing the non communicating control module.

Reference Information

Schematic Reference

- Data Communication Schematics
- Hybrid Energy Storage Schematics
- Control Module References

Connector End View Reference

Component Connector End Views

Description and Operation

Data Link Communications Description and Operation

Electrical Information Reference

- Circuit Testing
- Connector Repairs
- Testing for Intermittent Conditions and Poor Connections
- Wiring Repairs

Scan Tool Reference

Control Module References for scan tool information

Circuit/System Verification

1. Vehicle in Service Mode, observe the scan tool Hybrid/EV Battery 1-96 parameters. Verify that each reading is between 3.0-4.1 V, and all readings are within 0.1 V of each other.
   If any of the scan tool Hybrid/EV Battery 1-96 parameters are not within the specified range, refer to DTC P0B3B-P0BBB, P1B16-P1B2D, P1B45-P1BFE, P1E01-P1E06, or P1E4C-P1E8A .
2. Verify that DTC U2603 is not set.
   If the DTC is set, replace the A4 hybrid/EV battery pack.

Repair Instructions

Perform the Diagnostic Repair Verification after completing the diagnostic procedure.

- Drive Motor Battery Replacement and Shipping Preparation
- Control Module References for control module replacement, programming and setup

&#169© Copyright Chevrolet. All rights reserved

DTC U2604

Diagnostic Instructions

- Perform the Diagnostic System Check - Vehicle prior to using this diagnostic procedure.
- Review Strategy Based Diagnosis for an overview of the diagnostic approach.
- Diagnostic Procedure Instructions provides an overview of each diagnostic category.

DTC Descriptor

DTC U2604 00: Battery Energy Control Module Lost Communication with Hybrid/EV Battery Interface Control Module 2

Diagnostic Fault Information

Circuit	Short to Ground	Open/High Resistance	Short to Voltage	Signal Performance
5 V Reference	U2604	U2604	--	--
High-Voltage Fault Signal	U2604	U2604	--	--
BECM Dedicated Serial Data (+)	U2401	U2401, U2604	U2401	-
BECM Dedicated Serial Data (-)	U2401	U2401, U2604	U2401	-
Low Reference	-	U2604	--	--

Circuit/System Description

Control modules connected to the serial data circuits monitor for serial data communications during normal vehicle operation. Operating information and commands are exchanged among the control modules. The control modules have prerecorded information about what messages are needed to be exchanged on the serial data circuits, for each virtual network. The messages are supervised and also, some periodic messages are used by the receiver module as an availability indication of the transmitter module. Each message contains the identification number of the transmitter module.

Scan tool does not communicate the hybrid battery interface control module 2 on battery energy control module dedicated bus.

Conditions for Running the DTC

- The control module is awake and communicating.
- The system voltage is at least 9 V.

Conditions for Setting the DTC

There is no temperature report message from hybrid battery interface control module 2 to battery energy control module within 4 seconds.

Action Taken When the DTC Sets

- Cell voltage or cell temperature corresponding to hybrid battery interface control module 2 will be reported by the battery energy control module to the hybrid powertrain control module 2 as 0 V or -40°C (-40°F).
- The DTC U2604 is a type A DTC.

Conditions for Clearing the DTC

The DTC U2604 is a type A DTC.

Diagnostic Aids

- Sometimes, while diagnosing a specific customer concern or after a repair, you may notice a history U-code present. However, there is no associated "current" or "active" status. Loss-of- communication U-codes such as these can set for a variety of reasons. Many times, they are transparent to the vehicle operator and technician, and/or have no associated symptoms. Eventually, they will erase themselves automatically after a number of fault-free ignition cycles. This condition would most likely be attributed to one of these scenarios:
  - A control module on the data communication circuit was disconnected while the communication circuit is awake.
  - Power to one or more control modules was interrupted during diagnosis.
  - A low battery condition was present, so some control modules stop communicating when battery voltage drops below a certain threshold.
  - Battery power was restored to the vehicle and control modules on the communication circuit did not all re-initialise at the same time.
  - If a loss-of-communication U-code appears in history for no apparent reason, it is most likely associated with one of the scenarios above. These are all temporary conditions and should never be interpreted as an intermittent fault, causing you to replace a part.
- A control module may have a U-code stored in history that does not require any repairs. Issues with late or corrupted messages between control modules can be temporary with no apparent symptom or complaint; this does not mean the control module is faulty. Do not replace a control module based only on a history U-code.
- Do not replace a control module reporting a U-code. The U-code identifies which control module needs to be diagnosed for a communication issue.
- Communication may be available between the control module and the scan tool with one or more GMLAN serial data systems inoperative. This condition is due to the control module using multiple GMLAN busses.
- Use Data Link References to determine what GMLAN serial data communications the non communicating control module uses.
- The control module may not have internal protection for specific control circuits and may open a B+ or ignition fuse. If a fuse is open and the B+ or ignition circuit is not shorted to earth, ensure none of the control circuits are shorted to earth before replacing the non communicating control module.

Reference Information

Schematic Reference

- Data Communication Schematics
- Hybrid Energy Storage Schematics
- Control Module References

Connector End View Reference

Component Connector End Views

Description and Operation

Data Link Communications Description and Operation

Electrical Information Reference

- Circuit Testing
- Connector Repairs
- Testing for Intermittent Conditions and Poor Connections
- Wiring Repairs

Scan Tool Reference

Control Module References for scan tool information

Circuit/System Verification

1. Vehicle in Service Mode, observe the scan tool Hybrid/EV Battery 1-96 parameters. Verify that each reading is between 3.0-4.1 V, and all readings are within 0.1 V of each other.
   If any of the scan tool Hybrid/EV Battery 1-96 parameters are not within the specified range, refer to DTC P0B3B-P0BBB, P1B16-P1B2D, P1B45-P1BFE, P1E01-P1E06, or P1E4C-P1E8A .
2. Verify that DTC U2604 is not set.
   If the DTC is set, replace the A4 hybrid/EV battery pack.

Repair Instructions

Perform the Diagnostic Repair Verification after completing the diagnostic procedure.

- Drive Motor Battery Replacement and Shipping Preparation
- Control Module References for control module replacement, programming and setup

&#169© Copyright Chevrolet. All rights reserved

DTC U2605

Diagnostic Instructions

- Perform the Diagnostic System Check - Vehicle prior to using this diagnostic procedure.
- Review Strategy Based Diagnosis for an overview of the diagnostic approach.
- Diagnostic Procedure Instructions provides an overview of each diagnostic category.

DTC Descriptor

DTC U2605 00: Battery Energy Control Module Lost Communication with Hybrid/EV Battery Interface Control Module 3

Diagnostic Fault Information

Circuit	Short to Ground	Open/High Resistance	Short to Voltage	Signal Performance
5 V Reference	U2605	U2605	--	--
High-Voltage Fault Signal	U2605	U2605	--	--
BECM Dedicated Serial Data (+)	U2401	U2401, U2605	U2401	-
BECM Dedicated Serial Data (-)	U2401	U2401, U2605	U2401	-
Low Reference	-	U2605	--	--

Circuit/System Description

Control modules connected to the serial data circuits monitor for serial data communications during normal vehicle operation. Operating information and commands are exchanged among the control modules. The control modules have prerecorded information about what messages are needed to be exchanged on the serial data circuits, for each virtual network. The messages are supervised and also, some periodic messages are used by the receiver module as an availability indication of the transmitter module. Each message contains the identification number of the transmitter module.

Scan tool does not communicate the hybrid battery interface control module 3 on battery energy control module dedicated bus.

Conditions for Running the DTC

- The control module is awake and communicating.
- The system voltage is at least 9 V.

Conditions for Setting the DTC

There is no temperature report message from hybrid battery interface control module 3 to battery energy control module within 4 seconds.

Action Taken When the DTC Sets

- Cell voltage or cell temperature corresponding to hybrid battery interface control module 3 will be reported by the battery energy control module to the hybrid powertrain control module 2 as 0 V or -40°C (-40°F).
- The DTC U2605 is a type A DTC.

Conditions for Clearing the DTC

The DTC U2605 is a type A DTC.

Diagnostic Aids

- Sometimes, while diagnosing a specific customer concern or after a repair, you may notice a history U-code present. However, there is no associated "current" or "active" status. Loss-of- communication U-codes such as these can set for a variety of reasons. Many times, they are transparent to the vehicle operator and technician, and/or have no associated symptoms. Eventually, they will erase themselves automatically after a number of fault-free ignition cycles. This condition would most likely be attributed to one of these scenarios:
  - A control module on the data communication circuit was disconnected while the communication circuit is awake.
  - Power to one or more control modules was interrupted during diagnosis.
  - A low battery condition was present, so some control modules stop communicating when battery voltage drops below a certain threshold.
  - Battery power was restored to the vehicle and control modules on the communication circuit did not all re-initialise at the same time.
  - If a loss-of-communication U-code appears in history for no apparent reason, it is most likely associated with one of the scenarios above. These are all temporary conditions and should never be interpreted as an intermittent fault, causing you to replace a part.
- A control module may have a U-code stored in history that does not require any repairs. Issues with late or corrupted messages between control modules can be temporary with no apparent symptom or complaint; this does not mean the control module is faulty. Do not replace a control module based only on a history U-code.
- Do not replace a control module reporting a U-code. The U-code identifies which control module needs to be diagnosed for a communication issue.
- Communication may be available between the control module and the scan tool with one or more GMLAN serial data systems inoperative. This condition is due to the control module using multiple GMLAN busses.
- Use Data Link References to determine what GMLAN serial data communications the non communicating control module uses.
- The control module may not have internal protection for specific control circuits and may open a B+ or ignition fuse. If a fuse is open and the B+ or ignition circuit is not shorted to earth, ensure none of the control circuits are shorted to earth before replacing the non communicating control module.

Reference Information

Schematic Reference

- Data Communication Schematics
- Hybrid Energy Storage Schematics
- Control Module References

Connector End View Reference

Component Connector End Views

Description and Operation

Data Link Communications Description and Operation

Electrical Information Reference

- Circuit Testing
- Connector Repairs
- Testing for Intermittent Conditions and Poor Connections
- Wiring Repairs

Scan Tool Reference

Control Module References for scan tool information

Circuit/System Verification

1. Vehicle in Service Mode, observe the scan tool Hybrid/EV Battery 1-96 parameters. Verify that each reading is between 3.0-4.1 V, and all readings are within 0.1 V of each other.
   If any of the scan tool Hybrid/EV Battery 1-96 parameters are not within the specified range, refer to DTC P0B3B-P0BBB, P1B16-P1B2D, P1B45-P1BFE, P1E01-P1E06, or P1E4C-P1E8A .
2. Verify that DTC U2605 is not set.
   If the DTC is set, replace the A4 hybrid/EV battery pack.

Repair Instructions

Perform the Diagnostic Repair Verification after completing the diagnostic procedure.

- Drive Motor Battery Replacement and Shipping Preparation
- Control Module References for control module replacement, programming and setup

&#169© Copyright Chevrolet. All rights reserved

DTC U2606

Diagnostic Instructions

- Perform the Diagnostic System Check - Vehicle prior to using this diagnostic procedure.
- Review Strategy Based Diagnosis for an overview of the diagnostic approach.
- Diagnostic Procedure Instructions provides an overview of each diagnostic category.

DTC Descriptor

DTC U2606 00: Battery Energy Control Module Lost Communication with Hybrid/EV Battery Interface Control Module 4

Diagnostic Fault Information

Circuit	Short to Ground	Open/High Resistance	Short to Voltage	Signal Performance
5 V Reference	U2606	U2606	--	--
High-Voltage Fault Signal	U2606	U2606	--	--
BECM Dedicated Serial Data (+)	U2401	U2401, U2606	U2401	-
BECM Dedicated Serial Data (-)	U2401	U2401, U2606	U2401	-
Low Reference	-	U2606	--	--

Circuit/System Description

Control modules connected to the serial data circuits monitor for serial data communications during normal vehicle operation. Operating information and commands are exchanged among the control modules. The control modules have prerecorded information about what messages are needed to be exchanged on the serial data circuits, for each virtual network. The messages are supervised and also, some periodic messages are used by the receiver module as an availability indication of the transmitter module. Each message contains the identification number of the transmitter module.

Scan tool does not communicate the hybrid battery interface control module 4 on battery energy control module dedicated bus.

Conditions for Running the DTC

- The control module is awake and communicating.
- The system voltage is at least 9 V.

Conditions for Setting the DTC

There is no temperature report message from hybrid battery interface control module 4 to battery energy control module within 4 seconds.

Action Taken When the DTC Sets

- Cell voltage or cell temperature corresponding to hybrid battery interface control module 4 will be reported by the battery energy control module to the hybrid powertrain control module 2 as 0 V or -40°C (-40°F).
- DTC U2606 is a type A DTC.

Conditions for Clearing the DTC

DTC U2606 is a type A DTC.

Diagnostic Aids

- Sometimes, while diagnosing a specific customer concern or after a repair, you may notice a history U-code present. However, there is no associated "current" or "active" status. Loss-of- communication U-codes such as these can set for a variety of reasons. Many times, they are transparent to the vehicle operator and technician, and/or have no associated symptoms. Eventually, they will erase themselves automatically after a number of fault-free ignition cycles. This condition would most likely be attributed to one of these scenarios:
  - A control module on the data communication circuit was disconnected while the communication circuit is awake.
  - Power to one or more control modules was interrupted during diagnosis.
  - A low battery condition was present, so some control modules stop communicating when battery voltage drops below a certain threshold.
  - Battery power was restored to the vehicle and control modules on the communication circuit did not all re-initialise at the same time.
  - If a loss-of-communication U-code appears in history for no apparent reason, it is most likely associated with one of the scenarios above. These are all temporary conditions and should never be interpreted as an intermittent fault, causing you to replace a part.
- A control module may have a U-code stored in history that does not require any repairs. Issues with late or corrupted messages between control modules can be temporary with no apparent symptom or complaint; this does not mean the control module is faulty. Do not replace a control module based only on a history U-code.
- Do not replace a control module reporting a U-code. The U-code identifies which control module needs to be diagnosed for a communication issue.
- Communication may be available between the control module and the scan tool with one or more GMLAN serial data systems inoperative. This condition is due to the control module using multiple GMLAN busses.
- Use Data Link References to determine what GMLAN serial data communications the non communicating control module uses.
- The control module may not have internal protection for specific control circuits and may open a B+ or ignition fuse. If a fuse is open and the B+ or ignition circuit is not shorted to earth, ensure none of the control circuits are shorted to earth before replacing the non communicating control module.

Reference Information

Schematic Reference

- Data Communication Schematics
- Hybrid Energy Storage Schematics
- Control Module References

Connector End View Reference

Component Connector End Views

Description and Operation

Data Link Communications Description and Operation

Electrical Information Reference

- Circuit Testing
- Connector Repairs
- Testing for Intermittent Conditions and Poor Connections
- Wiring Repairs

Scan Tool Reference

Control Module References for scan tool information

Circuit/System Verification

1. Vehicle in Service Mode, observe the scan tool Hybrid/EV Battery 1-96 parameters. Verify that each reading is between 3.0-4.1 V, and all readings are within 0.1 V of each other.
   If any of the scan tool Hybrid/EV Battery 1-96 parameters are not within the specified range, refer to DTC P0B3B-P0BBB, P1B16-P1B2D, P1B45-P1BFE, P1E01-P1E06, or P1E4C-P1E8A .
2. Verify that DTC U2606 is not set.
   If the DTC is set, replace the A4 hybrid/EV battery pack.

Repair Instructions

Perform the Diagnostic Repair Verification after completing the diagnostic procedure.

- Drive Motor Battery Replacement and Shipping Preparation
- Control Module References for control module replacement, programming and setup

&#169© Copyright Chevrolet. All rights reserved

DTC U2608

Diagnostic Instructions

- Perform the Diagnostic System Check - Vehicle prior to using this diagnostic procedure.
- Review Strategy Based Diagnosis for an overview of the diagnostic approach.
- Diagnostic Procedure Instructions provides an overview of each diagnostic category.

DTC Descriptor

DTC U2608 00: Electric A/C Compressor Control Module Lost Communication with Hybrid Powertrain Control Module

Diagnostic Fault Information

Circuit	Short to Ground	Open/High Resistance	Short to Voltage	Signal Performance
B+	U2608	U2608	--	--
Ignition	U2608	U2608	--	--
Accessory Wake Up Serial Data 2	P06E4*	U2608*	--	--
High Speed GMLAN Serial Data (+)	U0073*	U0073, U2608*	U0073*	--
High Speed GMLAN Serial Data (-)	U0073*	U0073, U2608*	U0073*	--
Ground	--	U2608	--	--
* Other DTCs may set with this fault.				

Circuit/System Description

Control modules connected to the serial data circuits monitor for serial data communications during normal vehicle operation. Operating information and commands are exchanged among the control modules. The control modules have prerecorded information about what messages are needed to be exchanged on the serial data circuits, for each virtual network. The messages are supervised and also, some periodic messages are used by the receiver module as an availability indication of the transmitter module. Each message contains the identification number of the transmitter module.

Conditions for Running the DTC

- The system voltage is greater than 10.25 V.
- The vehicle power mode master requires serial data communication to occur from this specific control module.

Conditions for Setting the DTC

A supervised periodic message that includes the transmitter module availability has not been received for 3 seconds.

Action Taken When the DTC Sets

The DTC U2608 is a type B DTC.

Conditions for Clearing the DTC

The DTC U2608 is a type B DTC.

Diagnostic Aids

- Sometimes, while diagnosing a specific customer concern or after a repair, you may notice a history U-code present. However, there is no associated "current" or "active" status. Loss-of- communication U-codes such as these can set for a variety of reasons. Many times, they are transparent to the vehicle operator and technician, and/or have no associated symptoms. Eventually, they will erase themselves automatically after a number of fault-free ignition cycles. This condition would most likely be attributed to one of these scenarios:
  - A control module on the data communication circuit was disconnected while the communication circuit is awake.
  - Power to one or more control modules was interrupted during diagnosis.
  - A low battery condition was present, so some control modules stop communicating when battery voltage drops below a certain threshold.
  - Battery power was restored to the vehicle and control modules on the communication circuit did not all re-initialise at the same time.
  - If a loss-of-communication U-code appears in history for no apparent reason, it is most likely associated with one of the scenarios above. These are all temporary conditions and should never be interpreted as an intermittent fault, causing you to replace a part.
- A control module may have a U-code stored in history that does not require any repairs. Issues with late or corrupted messages between control modules can be temporary with no apparent symptom or complaint; this does not mean the control module is faulty. Do not replace a control module based only on a history U-code.
- Do not replace a control module reporting a U-code. The U-code identifies which control module needs to be diagnosed for a communication issue.
- Communication may be available between the control module and the scan tool with one or more GMLAN serial data systems inoperative. This condition is due to the control module using multiple GMLAN busses.
- Use Data Link References to determine what GMLAN serial data communications the non communicating control module uses.
- The control module may not have internal protection for specific control circuits and may open a B+ or ignition fuse. If a fuse is open and the B+ or ignition circuit is not shorted to earth, ensure none of the control circuits are shorted to earth before replacing the non communicating control module.

Reference Information

Schematic Reference

- Data Communication Schematics
- Control Module References

Connector End View Reference

Component Connector End Views

Description and Operation

Data Link Communications Description and Operation

Electrical Information Reference

- Circuit Testing
- Connector Repairs
- Testing for Intermittent Conditions and Poor Connections
- Wiring Repairs

Scan Tool Reference

Control Module References for scan tool information

Circuit/System Verification

1. Verify that DTC U0293 is not set.
   If the DTC is set, refer to DTC U0100-U02FF .
2. Verify that DTC U0073, P06E4, U1814, U2611, B1428, B1370, B1380, B1440, or B1441 is not set.
   If any of the DTCs are set, refer to Diagnostic Trouble Code (DTC) List - Vehicle .

Circuit/System Testing

Note: Use the schematic to identify the following:

- Control module location on the high-speed GMLAN serial data circuits
- The control module B+, ignition, earth, accessory wake-up serial data 2 and serial data circuit terminals

1. Vehicle OFF, disconnect the X1 and X2 harness connectors at the T6 power inverter module.

2. Test for less than 5 Ω between the T6 power inverter module case and earth.
   If greater than the specified value, test the earth strap for an open-circuit/high resistance.
3. If equipped, vehicle in Service Mode, verify that a test lamp illuminates between each B+ circuit terminal and earth.
   If the test lamp does not illuminate, test the B+ circuit for a short to ground or an open/high resistance. If the circuit fuse is open, test the control circuits of the T6 power inverter module for a short-circuit to earth. If the circuits test normal, replace the T6 power inverter module.
4. If equipped, vehicle in Service Mode, verify that a test lamp illuminates between each ignition circuit terminal and earth.
   If the test lamp does not illuminate, test the ignition circuit for a short to ground or an open/high resistance. If the circuit fuse is open, test the control circuits of the T6 power inverter module for a short-circuit to earth. If the circuits test normal, replace the T6 power inverter module.
5. If equipped, vehicle in Service Mode, verify that a test lamp illuminates between the accessory wake-up serial data 2 circuit terminal and earth.
   If the test lamp does not illuminate, test the entire circuit, including the B+ circuit to the K114B hybrid powertrain control module 2, for an open-circuit/high resistance or short-circuit to earth. If the circuits test normal, replace the K114B hybrid powertrain control module 2.
6. Vehicle OFF, disconnect the X1 harness connectors at the G1 A/C compressor.
7. Vehicle OFF, and all vehicle systems OFF, all keys at least 3 metres away from vehicle, all access doors closed. It may take up to 2 minutes for all vehicle systems to power down. Test for less than 2 Ω in each high-speed GMLAN serial data circuit between the T6 power inverter module and the G1 A/C compressor.
   If greater than the specified range, test the serial data circuit for an open-circuit/high resistance between the T6 power inverter module and the G1 A/C compressor.
8. If all circuits test normal, replace the T6 power inverter module.

Repair Instructions

Perform the Diagnostic Repair Verification after completing the diagnostic procedure.

- GMLAN Wiring Repairs
- Control Module References for control module replacement, programming and setup

&#169© Copyright Chevrolet. All rights reserved

DTC U2609

Diagnostic Instructions

- Perform the Diagnostic System Check - Vehicle prior to using this diagnostic procedure.
- Review Strategy Based Diagnosis for an overview of the diagnostic approach.
- Diagnostic Procedure Instructions provides an overview of each diagnostic category.

DTC Descriptor

DTC U2609 00: Battery Charger Control Module Lost Communication with Hybrid Powertrain Control Module

Diagnostic Fault Information

Circuit	Short to Ground	Open/High Resistance	Short to Voltage	Signal Performance
B+	U2609*	U2609	--	--
Ignition	U2609*	U2609*	--	--
Accessory Wake Up Serial Data 2	P06E4*	U2609*	--	--
High Speed GMLAN Serial Data (+)	U0073*	U0073, U2609*	U0073*	--
High Speed GMLAN Serial Data (-)	U0073*	U0073, U2609*	U0073*	--
Ground	--	U2609*	--	--
* Other modules/DTCs may set with this fault and multiple symptoms including a no-start condition may occur.				

Circuit/System Description

Control modules connected to the serial data circuits monitor for serial data communications during normal vehicle operation. Operating information and commands are exchanged among the control modules. The control modules have prerecorded information about what messages are needed to be exchanged on the serial data circuits, for each virtual network. The messages are supervised and also, some periodic messages are used by the receiver module as an availability indication of the transmitter module. Each message contains the identification number of the transmitter module.

Conditions for Running the DTC

- The system voltage is between 9–16 V.
- The vehicle power mode master requires serial data communication to occur from this specific control module.

Conditions for Setting the DTC

A supervised periodic message that includes the transmitter module availability has not been received.

Action Taken When the DTC Sets

The DTC U2609 is a type B DTC.

Conditions for Clearing the DTC

The DTC U2609 is a type B DTC.

Diagnostic Aids

- Sometimes, while diagnosing a specific customer concern or after a repair, you may notice a history U-code present. However, there is no associated "current" or "active" status. Loss-of- communication U-codes such as these can set for a variety of reasons. Many times, they are transparent to the vehicle operator and technician, and/or have no associated symptoms. Eventually, they will erase themselves automatically after a number of fault-free ignition cycles. This condition would most likely be attributed to one of these scenarios:
  - A control module on the data communication circuit was disconnected while the communication circuit is awake.
  - Power to one or more control modules was interrupted during diagnosis.
  - A low battery condition was present, so some control modules stop communicating when battery voltage drops below a certain threshold.
  - Battery power was restored to the vehicle and control modules on the communication circuit did not all re-initialise at the same time.
  - If a loss-of-communication U-code appears in history for no apparent reason, it is most likely associated with one of the scenarios above. These are all temporary conditions and should never be interpreted as an intermittent fault, causing you to replace a part.
- A control module may have a U-code stored in history that does not require any repairs. Issues with late or corrupted messages between control modules can be temporary with no apparent symptom or complaint; this does not mean the control module is faulty. Do not replace a control module based only on a history U-code.
- Do not replace a control module reporting a U-code. The U-code identifies which control module needs to be diagnosed for a communication issue.
- Communication may be available between the control module and the scan tool with one or more GMLAN serial data systems inoperative. This condition is due to the control module using multiple GMLAN busses.
- Use Data Link References to determine what GMLAN serial data communications the non communicating control module uses.
- The control module may not have internal protection for specific control circuits and may open a B+ or ignition fuse. If a fuse is open and the B+ or ignition circuit is not shorted to earth, ensure none of the control circuits are shorted to earth before replacing the non communicating control module.

Reference Information

Schematic Reference

- Data Communication Schematics
- Control Module References

Connector End View Reference

Component Connector End Views

Description and Operation

Data Link Communications Description and Operation

Electrical Information Reference

- Circuit Testing
- Connector Repairs
- Testing for Intermittent Conditions and Poor Connections
- Wiring Repairs

Scan Tool Reference

Control Module References for scan tool information

Circuit/System Verification

1. Verify that DTC U0293 is not set.
   If the DTC is set, refer to DTC U0100-U02FF .
2. Verify that DTC U0073, P06E4, U1814, U2611, B1428, B1370, B1380, B1440, B1441, B1325, or P0562 is not set.
   If any of the DTCs are set, refer to Diagnostic Trouble Code (DTC) List - Vehicle .

Circuit/System Testing

Note: Use the schematic to identify the following:
- Control module location on the high-speed GMLAN serial data circuits
- The control module B+, ignition, earth, accessory wake-up serial data 2 and serial data circuit terminals

1. Vehicle OFF, disconnect the X1 and X2 harness connectors at the T6 power inverter module.

2. Test for less than 5 Ω between the T6 power inverter module case and earth.
   If greater than the specified range, test the earth strap for an open-circuit/high resistance.
3. If equipped, vehicle in Service Mode, verify that a test lamp illuminates between each B+ circuit terminal and earth.
   If the test lamp does not illuminate, test the B+ circuit for a short to ground or an open/high resistance. If the circuit fuse is open, test the control circuits of the T6 power inverter module for a short-circuit to earth. If the circuits test normal, replace the T6 power inverter module.
4. If equipped, vehicle in Service Mode, verify that a test lamp illuminates between each ignition circuit terminal and earth.
   If the test lamp does not illuminate, test the ignition circuit for a short to ground or an open/high resistance. If the circuit fuse is open, test the control circuits of the T6 power inverter module for a short-circuit to earth. If the circuits test normal, replace the T6 power inverter module.
5. If equipped, vehicle in Service Mode, verify that a test lamp illuminates between the accessory wake-up serial data 2 circuit terminal and earth.
   If the test lamp does not illuminate, test the entire circuit, including the B+ circuit to the K114B hybrid powertrain control module 2, for an open-circuit/high resistance or short-circuit to earth. If the circuits test normal, replace the K114B hybrid powertrain control module 2.
6. Vehicle OFF, disconnect the X1 harness connector at the T18 battery charger.
7. Vehicle OFF, and all vehicle systems OFF, all keys at least 3 metres away from vehicle, all access doors closed. It may take up to 2 minutes for all vehicle systems to power down. Test for less than 2 Ω in each high-speed GMLAN serial data circuit between the T6 power inverter module and the T18 battery charger.
   If greater than the specified range, test the serial data circuit for an open-circuit/high resistance between the T6 power inverter module and the T18 battery charger.
8. If all circuits test normal, replace the T6 power inverter module.

Repair Instructions

Perform the Diagnostic Repair Verification after completing the diagnostic procedure.

- GMLAN Wiring Repairs
- Control Module References for control module replacement, programming and setup

&#169© Copyright Chevrolet. All rights reserved

DTC U2611

Diagnostic Instructions

- Perform the Diagnostic System Check - Vehicle prior to using this diagnostic procedure.
- Review Strategy Based Diagnosis for an overview of the diagnostic approach.
- Diagnostic Procedure Instructions provides an overview of each diagnostic category.

DTC Descriptor

DTC U2611 00: Auxiliary Transmission Fluid Pump Control Module Lost Communication with Hybrid Powertrain Control Module

Circuit/System Description

The Auxiliary Transmission Fluid Pump Control Module and the Hybrid Powertrain Control Module 1 are all internal to the Power Inverter Module. The Auxiliary Transmission Fluid Pump Control Module communicates only with the Hybrid Powertrain Control Module 1 with the Hybrid Powertrain Control Module 1 sending out diagnostic trouble code information to other control modules regarding the Auxiliary Transmission Fluid Pump Control Module. All circuits to the Hybrid Powertrain Control Module 1 and Auxiliary Transmission Fluid Pump Control Module are also internal to the Power Inverter Module and replaced as a single component.

Communication diagnostics for the serial data, including control module power and earth as well as the wake-up circuits for Auxiliary Transmission Fluid Pump Control Module and the Hybrid Powertrain Control Module 1 are all diagnosed from external sources only to the Power Inverter Module connector because any circuit fault condition within the Power Inverter Module will cause a complete replacement.

Conditions for Running the DTC

- The system voltage is more than 10 V.
- The vehicle power mode master requires serial data communication to occur from this specific module.

Conditions for Setting the DTC

A supervised periodic message that includes the transmitter module availability has not been received.

Action Taken When the DTC Sets

The control module is never signalled. Therefore, the specific subsystems will not function.

Conditions for Clearing the DTC

- A current DTC clears when the malfunction is no longer present.
- A history DTC clears when the module ignition cycle counter reaches the reset threshold of 50, without a repeat of the malfunction.

Diagnostic Aids

- Sometimes, while diagnosing a specific customer concern or after a repair, you may notice a history U-code present. However, there is no associated "current" or "active" status. Loss-of- communication U-codes such as these can set for a variety of reasons. Many times, they are transparent to the vehicle operator and technician, and/or have no associated symptoms. Eventually, they will erase themselves automatically after a number of fault-free ignition cycles. This condition would most likely be attributed to one of these scenarios:
  - A control module on the data communication circuit was disconnected while the communication circuit is awake.
  - Power to one or more control modules was interrupted during diagnosis.
  - A low battery condition was present, so some control modules stop communicating when battery voltage drops below a certain threshold.
  - Battery power was restored to the vehicle and control modules on the communication circuit did not all re-initialise at the same time.
  - If a loss-of-communication U-code appears in history for no apparent reason, it is most likely associated with one of the scenarios above. These are all temporary conditions and should never be interpreted as an intermittent fault, causing you to replace a part.
- A control module may have a U-code stored in history that does not require any repairs. Issues with late or corrupted messages between control modules can be temporary with no apparent symptom or complaint; this does not mean the control module is faulty. Do not replace a control module based only on a history U-code.
- The control module may not have internal protection for specific control circuits and may open a B+ or ignition fuse. If a fuse is open and the B+ or ignition circuit is not shorted to earth, ensure none of the control circuits are shorted to earth before replacing the non communicating control module.
- If DTC U2611 is only set current in the hybrid powertrain control module 1, the power inverter module must be replaced due to all circuits between the hybrid powertrain control module 1 and auxiliary transmission fluid pump control module being internal to the power inverter module.

Reference Information

Schematic Reference

- Data Communication Schematics
- Control Module References

Connector End View Reference

Component Connector End Views

Description and Operation

Data Link Communications Description and Operation

Electrical Information Reference

- Circuit Testing
- Connector Repairs
- Testing for Intermittent Conditions and Poor Connections
- Wiring Repairs

Scan Tool Reference

Control Module References for scan tool information

Circuit/System Verification

1. Verify that DTC U0293 is not set.
   If the DTC is set, refer to DTC U0100-U02FF .
2. Verify that DTC U2611 is not set current only in the hybrid powertrain control module 1.
   If the DTC is set current in the hybrid powertrain control module 1 only, replace the T6 power inverter module.

Repair Instructions

Perform the Diagnostic Repair Verification after completing the diagnostic procedure.

- GMLAN Wiring Repairs
- Control Module References for control module replacement, programming and setup

&#169© Copyright Chevrolet. All rights reserved

DTC U2612

Diagnostic Instructions

- Perform the Diagnostic System Check - Vehicle prior to using this diagnostic procedure.
- Review Strategy Based Diagnosis for an overview of the diagnostic approach.
- Diagnostic Procedure Instructions provides an overview of each diagnostic category.

DTC Descriptor

DTC U2612 00: Battery Charger Control Module Lost Communication with Hybrid Powertrain Control Module 2

Diagnostic Fault Information

Circuit	Short to Ground	Open/High Resistance	Short to Voltage	Signal Performance
B+	U2612	U2612	--	--
Ignition	U2612	U2612	--	--
Accessory Wake Up Serial Data	U1814	U2612	--	--
High Speed GMLAN Serial Data (+)	U0073, 1	U0073, U2612	U0073, 1	--
High Speed GMLAN Serial Data (-)	U0073, 1	U0073, U2612	U0073, 1	-
High-Voltage Energy Management High Speed GMLAN Serial Data (+)	U007A*	U007A, U2612	U007A*	-
High-Voltage Energy Management High Speed GMLAN Serial Data (-)	U007A*	U007A, U2612	U007A*	--
Ground	--	U2612	--	--
1. Scan Tool Does Not Communicate With High-Speed GMLAN Device * Other DTCs may set with this fault				

Circuit/System Description

Control modules connected to the serial data circuits monitor for serial data communications during normal vehicle operation. Operating information and commands are exchanged among the control modules. The control modules have prerecorded information about what messages are needed to be exchanged on the serial data circuits, for

each virtual network. The messages are supervised and also, some periodic messages are used by the receiver module as an availability indication of the transmitter module. Each message contains the identification number of the transmitter module.

Conditions for Running the DTC

The system voltage is between 9–16 V.

Conditions for Setting the DTC

A supervised periodic message that includes the transmitter module availability has not been received.

Action Taken When the DTC Sets

The DTC U2612 is a type B DTC.

Conditions for Clearing the DTC

The DTC U2612 is a type B DTC.

Diagnostic Aids

- Sometimes, while diagnosing a specific customer concern or after a repair, you may notice a history U-code present. However, there is no associated "current" or "active" status. Loss-of- communication U-codes such as these can set for a variety of reasons. Many times, they are transparent to the vehicle operator and technician, and/or have no associated symptoms. Eventually, they will erase themselves automatically after a number of fault-free ignition cycles. This condition would most likely be attributed to one of these scenarios:
  - A control module on the data communication circuit was disconnected while the communication circuit is awake.
  - Power to one or more control modules was interrupted during diagnosis.
  - A low battery condition was present, so some control modules stop communicating when battery voltage drops below a certain threshold.
  - Battery power was restored to the vehicle and control modules on the communication circuit did not all re-initialise at the same time.
  - If a loss-of-communication U-code appears in history for no apparent reason, it is most likely associated with one of the scenarios above. These are all temporary conditions and should never be interpreted as an intermittent fault, causing you to replace a part.
- A control module may have a U-code stored in history that does not require any repairs. Issues with late or corrupted messages between control modules can be temporary with no apparent symptom or complaint; this does not mean the control module is faulty. Do not replace a control module based only on a history U-code.
- Do not replace a control module reporting a U-code. The U-code identifies which control module needs to be diagnosed for a communication issue.
- Communication may be available between the control module and the scan tool with one or more GMLAN serial data systems inoperative. This condition is due to the control module using multiple GMLAN busses.
- Use Data Link References to determine what GMLAN serial data communications the non communicating control module uses.
- The control module may not have internal protection for specific control circuits and may open a B+ or ignition fuse. If a fuse is open and the B+ or ignition circuit is not

shorted to ground, ensure none of the control circuits are shorted to ground before replacing the control module.

Reference Information

Schematic Reference

- Data Communication Schematics
- Control Module References

Connector End View Reference

Component Connector End Views

Description and Operation

Data Link Communications Description and Operation

Electrical Information Reference

- Circuit Testing
- Connector Repairs
- Testing for Intermittent Conditions and Poor Connections
- Wiring Repairs

Scan Tool Reference

Control Module References for scan tool information

Circuit/System Verification

Verify that DTC U0073, U007A, U1814, B1428, B1370, B1380, B1440, B1441, B1325 or P0562 is not set.

If any of the DTCs are set, refer to Diagnostic Trouble Code (DTC) List - Vehicle to diagnose those DTCs prior to this diagnostic.

Circuit/System Testing

Note: Use the schematic to identify the following:

- The control module locations on the high-speed GMLAN and high- voltage energy management GMLAN serial data circuits

- The control module B+, ignition, earth, accessory wake-up serial data and serial data circuit terminals

1. Vehicle OFF, disconnect the harness connector at the K114B hybrid powertrain control module 2.
2. Test for less than 10 Ω between each ground circuit terminal and ground.
   If greater than the specified range, test the ground circuit for an open/high resistance.
3. If equipped, vehicle in Service Mode, verify that a test lamp illuminates between each B+ circuit terminal and earth.
   If the test lamp does not illuminate, test the B+ circuit for a short to ground or an open/high resistance. If the circuit fuse is open, test the control circuits of the K114B hybrid powertrain control module 2 for a short-circuit to earth. If the circuits test normal, replace the K114B hybrid powertrain control module 2.
4. If equipped, vehicle in Service Mode, verify that a test lamp illuminates between each ignition circuit terminal and earth.
   If the test lamp does not illuminate, test the ignition circuit for a short to ground or an open/high resistance. If the circuit fuse is open, test the control circuits of the K114B hybrid powertrain control module 2 for a short-circuit to earth. If the circuits test normal, replace the K114B hybrid powertrain control module 2.
5. If equipped, vehicle in Service Mode, verify that a test lamp illuminates between the accessory wake up serial data circuit terminal and earth.
   If the test lamp does not illuminate, test the entire circuit, including the B+ circuit to the K9 body control module (BCM), for an open-circuit/high resistance or a short-circuit to earth. If the circuits test normal, replace the K9 BCM.
6. Vehicle OFF, disconnect the X1 harness connectors at the T18 battery charger.
7. Vehicle OFF, and all vehicle systems OFF, all keys at least 3 metres away from vehicle, all access doors closed. It may take up to 2 minutes for all vehicle systems to power down. Test for less than 2 Ω in each serial data circuit between the K114B hybrid powertrain control module 2 and the T18 battery charger.
   If greater than the specified range, test the serial data circuit for an open-circuit/high resistance between the K114B hybrid powertrain control module 2 and the T18 battery charger.
8. If all circuits test normal, replace the K114B hybrid powertrain control module 2.

Repair Instructions

Perform the Diagnostic Repair Verification after completing the diagnostic procedure.

- GMLAN Wiring Repairs
- Control Module References for control module replacement, programming and setup

&#169© Copyright Chevrolet. All rights reserved

Symptoms - Data Communications

Note: The following steps must be completed before using the symptom tables.

1. Perform the Diagnostic System Check - Vehicle before using the symptom tables in order to verify that all of the following are true:
   - There are no DTCs set.
   - The control modules can communicate via the serial data links.
2. Review the system operation in order to familiarize yourself with the system functions. Refer to Data Link Communications Description and Operation .

Visual/Physical Inspection

- Inspect for aftermarket devices which could affect the operation of the systems. Refer to Checking Aftermarket Accessories .
- Inspect the easily accessible or visible system components for obvious damage or conditions which could cause the symptom.

Intermittent

Faulty electrical connections or wiring may be the cause of intermittent conditions. Refer to Testing for Intermittent Conditions and Poor Connections .

Symptom List

Refer to a symptom diagnostic procedure from the following list in order to diagnose the symptom:

- Scan Tool Does Not Power Up
- Scan Tool Does Not Communicate with High Speed GMLAN Device
- Scan Tool Does Not Communicate with Low Speed GMLAN Device
- Scan Tool Does Not Communicate with Chassis High Speed GMLAN Device

&#169© Copyright Chevrolet. All rights reserved

Scan Tool Does Not Power Up

Diagnostic Instructions

- Perform the Diagnostic System Check - Vehicle prior to using this diagnostic procedure.
- Review Strategy Based Diagnosis for an overview of the diagnostic approach.
- Diagnostic Procedure Instructions provides an overview of each diagnostic category.

Diagnostic Fault Information

Circuit	Short to Ground	Open/High Resistance	Short to Voltage	Signal Performance
DLC B+	1	1	--	--
DLC Ground	--	1	--	--
1. Scan Tool Does Not Power Up				

Circuit/System Description

The data link connector (DLC) is a standardised 16 cavity connector. Connector design and location is dictated by an industry wide standard, and is required to provide the following:

- Scan tool B+ voltage at terminal 16
- Scan tool ground at terminal 4
- Common ground at terminal 5

Diagnostic Aids

- The scan tool will power up with the vehicle OFF. Some control modules however, will not communicate unless the vehicle is ON and the power mode master module sends the appropriate power mode message.
- If the B+ circuit, ground circuits, and connections of the DLC are functioning properly, the malfunction must be due to the scan tool.

Reference Information

Schematic Reference

Data Communication Schematics

Connector End View Reference

Component Connector End Views

Description and Operation

Data Link Communications Description and Operation

Electrical Information Reference

- Circuit Testing
- Connector Repairs
- Testing for Intermittent Conditions and Poor Connections
- Wiring Repairs

Scan Tool Reference

Control Module References for scan tool information.

Circuit/System Testing

1. Vehicle OFF, test for less than 2.0 Ω between the earth circuits terminal 4 of the DLC and earth, and terminal 5 of the DLC and earth.
   If greater than the specified range, test the ground circuit for an open/high resistance.
2. Vehicle in Service Mode, verify a test lamp illuminates between the B+ circuit terminal 16 at the DLC and earth.
   If the test lamp does not illuminate, test the B+ circuit for a short to ground or an open/high resistance.
3. If all circuits test normal, refer to the scan tool user guide.

Repair Instructions

Perform the Diagnostic Repair Verification after completing the repair.

&#169© Copyright Chevrolet. All rights reserved

Scan Tool Does Not Communicate with Chassis High Speed GMLAN Device

Diagnostic Instructions

- Perform the Diagnostic System Check - Vehicle prior to using this diagnostic procedure.
- Review Strategy Based Diagnosis for an overview of the diagnostic approach.
- Diagnostic Procedure Instructions provides an overview of each diagnostic category.

Diagnostic Fault Information

Circuit	Short to Ground	Open/High Resistance	Short to Voltage	Signal Performance
Chassis High Speed GMLAN Serial Data (+)	1	U0100-U02FF*	1	--
Chassis High Speed GMLAN Serial Data (-)	1	U0100-U02FF*	1	--
Ground (DLC, terminal 5)	--	1	--	--

* No communications with one or more chassis high speed GMLAN modules. An open in only one chassis high speed GMLAN serial data circuit may allow degraded communication between the modules. An open between the data link connector (DLC) and the first splice will only effect the communication with the scan tool. The vehicle modules will still communicate.

1. No communication with any chassis high speed GMLAN module

Circuit/System Description

The GMLAN high speed chassis expansion bus functions the same as the GMLAN high speed bus, and the two buses operate in parallel. The expansion chassis bus was added to reduce message congestion on the primary high speed bus. Since the GMLAN high speed chassis bus and primary GMLAN high speed bus operate in the same manner, the diagnostics for each are the same.

The serial data is transmitted on two twisted wires that allow speeds up to 500 Kb/s. The twisted pair is terminated with two 120 ohm resistors. The terminating resistor can be a separate resistor in a connector assembly or internal to a control module. The resistors are used as the load for the chassis high speed GMLAN bus during normal vehicle operation. The chassis high-speed GMLAN is a differential bus. The chassis high-speed GMLAN serial data bus (+) and chassis high-speed GMLAN serial data (-) are driven to opposite extremes from a rest or idle level of approximately 2.5 V. Driving the lines to their extremes, adds one volt to the chassis high- speed GMLAN serial data bus (+) circuit and subtracts one volt from the chassis high-speed GMLAN serial data bus (-) circuit. If serial data is lost, control modules will set a no communication code against the non-communicating control module. Note that a loss of serial data DTC does not represent a failure of the control module that set it.

Diagnostic Aids

- Sometimes, while diagnosing a specific customer concern or after a repair, you may notice a history U-code present. However, there is no associated "current" or "active" status. Loss-of-communication U-codes such as these can set for a variety of reasons. Many times, they are transparent to the vehicle operator and technician, and/or have no associated symptoms. Eventually, they will erase themselves automatically after a number of fault-free ignition cycles. This condition would most likely be attributed to one of these scenarios:
  - A control module on the data communication circuit was disconnected while the communication circuit is awake.
  - Power to one or more modules was interrupted during diagnosis
  - A low battery condition was present, so some control modules stop communicating when battery voltage drops below a certain threshold.
  - Battery power was restored to the vehicle and control modules on the communication circuit did not all re-initialise at the same time.
  - If a loss-of-communication U-code appears in history for no apparent reason, it is most likely associated with one of the scenarios above. These are all temporary conditions and should never be interpreted as an intermittent fault, causing you to replace a part.
- Do not replace a control module reporting a U code. The U code identifies which control module needs to be diagnosed for a communication issue.
- Communication may be available between the control module and the scan tool with one or more GMLAN serial data systems inoperative. This condition is due to the control module using multiple GMLAN busses.
- An open in the DLC ground circuit terminal 5 will allow the scan tool to operate but not communicate with the vehicle.
- Technicians may find various Local Area Network (LAN) communication Diagnostic Trouble Codes (DTC).
- The engine may not start when there is a total malfunction of the chassis high speed GMLAN serial data bus.

Reference Information

Schematic Reference

- Data Communication Schematics
- Control Module References

Connector End View Reference

Component Connector End Views

Description and Operation

Data Link Communications Description and Operation

Electrical Information Reference

- Circuit Testing

- Connector Repairs
- Testing for Intermittent Conditions and Poor Connections
- Wiring Repairs

Scan Tool Reference

Control Module References for scan tool information

Circuit/System Testing

Note: Each control module may need to be disconnected to isolate a circuit fault. Use the schematic to identify the following:

- Control modules the vehicle is equipped with
- Chassis high speed GMLAN serial data circuit terminating resistors
- Control module locations on the chassis high speed GMLAN serial data circuits
- Each control module chassis high speed GMLAN serial data circuit terminals

1. Attempt to communicate with all control modules on the chassis high-speed GMLAN serial data circuit. Refer to Data Link References . Communications should not be available with two or more control modules on the chassis high speed GMLAN serial data circuit.
   If only one control module is not communicating, diagnose that control module only. Refer to DTC U0100-U02FF .
2. Disconnect the scan tool from the X84 data link connector (DLC). The following tests will be done at the DLC connector.
3. Vehicle OFF, and all vehicle systems OFF, all keys at least 3 metres away from vehicle, all access doors closed. It may take up to 2 minutes for all vehicle systems to power down. Test for less than 10 Ω between the ground circuit terminal 5 and ground.
   If greater than the specified range, test the ground circuit for an open/high resistance.
4. Vehicle in Service Mode, test for less than 4.5 V between the serial data circuits listed below and earth:
   - Terminal 12
   - Terminal 13

   If greater than the specified range, test the serial data circuit for a short to voltage. Refer to Testing the Serial Data Circuits for a Short to Voltage.
5. Vehicle OFF, and all vehicle systems OFF, all keys at least 3 metres away from vehicle, all access doors closed. It may take up to 2 minutes for all vehicle systems to power down. Test for greater than 100 Ω between the serial data circuits listed below and ground:
   - Terminal 12
   - Terminal 13

   If less than the specified range, test the serial data circuit for a short to ground. Refer to Testing the Serial Data Circuits for a Short to ground.
6. Test for 50-70 Ω between the serial data circuits terminal 12 and terminal 13.
   If less than 35 Ω, test for a short between the serial data circuits. Refer to Testing the Serial Data Circuits for a Short between the Circuits.
   If 35-50 Ω there may be a third terminating resistor between the serial data circuits. This can happen if the incorrect control module is installed. Some control modules are available with and without the terminating resistors installed to reduce the need of terminating resistors in the wiring harness.
   If greater than 70 Ω but less than infinite, test the serial data circuit for an open/high resistance. Refer to Testing the Serial Data Circuits for an Open/High Resistance.

If infinite, test the serial data circuits between the DLC and the first connection to the serial data circuit for an open/high resistance.

7. If the serial data circuits test normal, refer to Testing the Control Module Circuits.

Testing the Serial Data Circuits for a Short to Voltage

1. Vehicle OFF, disconnect the harness connectors with the chassis high-speed GMLAN serial data circuits at an easily accessible control module.
2. Vehicle in Service Mode, test for greater than 4.5 V between each serial data circuit at the control module connector that was just disconnected and earth. Verify that one or more serial data circuits are greater than 4.5 V.
   If all serial data circuits are less than the specified range, replace the control module that was disconnected.
3. Vehicle OFF, disconnect the harness connectors with the chassis high-speed GMLAN serial data circuits at another control module, in the direction of the circuit shorted to voltage.
4. Vehicle in Service Mode, test for greater than 4.5 V between the serial data circuits at the control module connector that was just disconnected and earth. Verify that one or more serial data circuits are greater than 4.5 V.
   If all serial data circuits are less than the specified range, replace the control module that was just disconnected.
5. Repeat step 3 until one of the follow conditions are isolated:
   - A short to voltage on the serial data circuit between 2 control modules or splice packs, if equipped
   - A short to voltage on the serial data circuit between a control module and a terminating resistor.

Testing the Serial Data Circuits for a Short to Ground

1. Vehicle OFF, disconnect the harness connectors with the chassis high-speed GMLAN serial data circuits at an easily accessible control module.
2. Vehicle OFF, and all vehicle systems OFF, all keys at least 3 metres away from vehicle, all access doors closed. It may take up to 2 minutes for all vehicle systems to power down. Test for less than 1k Ω between each serial data circuit at the control module connector that was just disconnected and ground. Verify that one or more serial data circuits are less than 1k Ω.
   If all serial data circuits are greater than the specified range, replace the control module that was disconnected.
3. Disconnect the harness connectors with the chassis high speed GMLAN serial data circuits at another control module, in the direction of the circuit shorted to ground.
4. Vehicle OFF, and all vehicle systems OFF, all keys at least 3 metres away from vehicle, all access doors closed. It may take up to 2 minutes for all vehicle systems to power down. Test for less than 1k Ω between the serial data circuits at the control module connector that was just disconnected and ground. Verify that one or more serial data circuits are less than 1k Ω.
   If greater than the specified range for all serial data circuits, replace the control module that was just disconnected.
5. Repeat step 3 until one of the follow conditions are isolated:
   - A short to ground on the serial data circuit between 2 control modules or splice packs, if equipped
   - A short to ground on the serial data circuit between a control module and a terminating resistor.

Testing the Serial Data Circuits for a Short between the Circuits

1. Vehicle OFF, disconnect the harness connectors with the chassis high-speed GMLAN serial data circuits at an easily accessible control module that is not communicating.

2. Vehicle OFF, and all vehicle systems OFF, all keys at least 3 metres away from vehicle, all access doors closed. It may take up to 2 minutes for all vehicle systems to power down. Test for less than 110 Ω between each pair of serial data circuits at the control module connector that was just disconnected. Verify that one pair of serial data circuits are less than 110 Ω.
   If each pair of serial data circuits is greater than the specified range, replace the control module that was disconnected.
3. Connect the harness connectors at the control module that was disconnected.
4. Disconnect the harness connectors with the chassis high speed GMLAN serial data circuits at another control module, in the direction of the circuits shorted together.
5. Vehicle OFF, and all vehicle systems OFF, all keys at least 3 metres away from vehicle, all access doors closed. It may take up to 2 minutes for all vehicle systems to power down. Test for less than 110 Ω between each pair of serial data circuits at the control module connector that was just disconnected. Verify that one pair of serial data circuits are less than 110 Ω.
   If each pair of serial data circuits is greater than the specified range, replace the control module that was just disconnected.
6. Repeat step 3 until one of the following conditions are isolated:
   - Serial data circuits shorted together between 2 control modules or splice packs, if equipped
   - Serial data circuits shorted together between a control module and a terminating resistor
   - A shorted terminating resistor

Testing the Serial Data Circuits for an Open/High Resistance

1. Vehicle OFF, disconnect the harness connectors with the chassis high-speed GMLAN serial data circuits at an easily accessible control module that is not communicating.
2. Vehicle OFF, and all vehicle systems OFF, all keys at least 3 metres away from vehicle, all access doors closed. It may take up to 2 minutes for all vehicle systems to power down. Test for greater than 130 Ω between each pair of serial data circuits at the control module connector that was just disconnected. Verify that one pair of serial data circuits are greater than 130 Ω.
   If each pair of serial data circuits is less than the specified range, replace the control module that was disconnected.
3. Connect the harness connectors at the control module that was disconnected.
4. Disconnect the harness connectors with the chassis high speed GMLAN serial data circuits at another control module, in the direction of the open circuit.
5. Vehicle OFF, and all vehicle systems OFF, all keys at least 3 metres away from vehicle, all access doors closed. It may take up to 2 minutes for all vehicle systems to power down. Test for greater than 130 Ω between each pair of serial data circuits at the control module connector that was just disconnected. Verify that one pair of serial data circuits are greater than 130 Ω.
   If each pair of serial data circuits is less than the specified range, replace the control module that was just disconnected.
6. Repeat step 3 until one of the following conditions are isolated:
   - An open/high resistance on the serial data circuit between 2 control modules or splice packs, if equipped
   - An open/high resistance on the serial data circuit between a control module and a terminating resistor
   - An open/high resistance terminating resistor

Testing the Control Module Circuits

1. Vehicle OFF, disconnect the harness connectors at an easily accessible control module that is not communicating.
2. Vehicle OFF, and all vehicle systems OFF, all keys at least 3 metres away from vehicle, all access doors closed. It may take up to 2 minutes for all vehicle systems to

power down. Test for less than 10 Ω between each earth circuit terminal and earth, and at the control module connector that was just disconnected.
If greater than the specified range, test the earth circuit and earth connection for an open-circuit/high resistance.

3. Vehicle OFF, verify that a test lamp does not illuminate between each ignition circuit terminal and earth.
If the test lamp does illuminate, test the ignition circuit for a short to voltage. If the circuits test normal, replace the appropriate control module.
4. Vehicle in Service Mode, verify that a test lamp illuminates between each ignition circuit terminal and earth.
If the test lamp does not illuminate, test the ignition circuit for a short to ground or an open/high resistance. If the circuits test normal, replace the appropriate control module.
5. Vehicle OFF, connect the harness connectors at the control module that was disconnected.
6. Repeat step 1 at another control module that is not communicating until one of the following conditions are isolated:
   - An open-circuit/high resistance on the earth circuit or earth connection
   - A short-circuit to voltage, a short-circuit to earth or an open-circuit/high resistance on the ignition circuit

Repair Instructions

Perform the Diagnostic Repair Verification after completing the repair.

- GMLAN Wiring Repairs
- Control Module References for control module replacement, setup, and programming

&#169© Copyright Chevrolet. All rights reserved

Scan Tool Does Not Communicate with High Speed GMLAN Device

Diagnostic Instructions

- Perform the Diagnostic System Check - Vehicle prior to using this diagnostic procedure.
- Review Strategy Based Diagnosis for an overview of the diagnostic approach.
- Diagnostic Procedure Instructions provides an overview of each diagnostic category.

Diagnostic Fault Information

Circuit	Short to Ground	Open/High Resistance	Short to Voltage	Signal Performance
High Speed GMLAN Serial Data (+)	1	U0100-U02FF*	1	--
High Speed GMLAN Serial Data (-)	1	U0100-U02FF*	1	--
Ground (DLC, terminal 5)	--	1	--	--

* No communications with one or more high speed GMLAN modules. An open in only one high-speed GMLAN serial data circuit may allow degraded communication between the control modules. An open between the data link connector (DLC) and the first splice will only effect the communication with the scan tool. The vehicle modules will still communicate.

1. No communication with any high speed GMLAN module

Circuit/System Description

The serial data is transmitted on two twisted wires that allow speeds up to 500 Kb/s. The twisted pair is terminated with two 120 ohms resistors, one is internal to the engine control module (ECM) and the other can be a separate resistor in a connector assembly or in another control module. The resistors are used as the load for the high-speed GMLAN bus during normal vehicle operation. The high speed GMLAN is a differential bus. The high speed GMLAN serial data bus (+) and high speed GMLAN serial data (-) are driven to opposite extremes from a rest or idle level of approximately 2.5 V. Driving the lines to their extremes, adds one volt to the high speed GMLAN serial data bus (+) circuit and subtracts one volt from the high speed GMLAN serial data bus (-) circuit. If serial data is lost, control modules will set a no communication code against the non-communicating control module. Note that a loss of serial data DTC does not represent a failure of the control module that set it.

Diagnostic Aids

- Sometimes, while diagnosing a specific customer concern or after a repair, you may notice a history U-code present. However, there is no associated "current" or "active" status. Loss-of-communication U-codes such as these can set for a variety of reasons. Many times, they are transparent to the vehicle operator and technician, and/or

have no associated symptoms. Eventually, they will erase themselves automatically after a number of fault-free ignition cycles. This condition would most likely be attributed to one of these scenarios:

- A control module on the data communication circuit was disconnected while the communication circuit is awake.
- Power to one or more modules was interrupted during diagnosis.
- A low battery condition was present, so some control modules stop communicating when battery voltage drops below a certain threshold.
- Battery power was restored to the vehicle and control modules on the communication circuit did not all re-initialise at the same time.
- If a loss-of-communication U-code appears in history for no apparent reason, it is most likely associated with one of the scenarios above. These are all temporary conditions and should never be interpreted as an intermittent fault, causing you to replace a part.

- Do not replace a control module reporting a U code. The U code identifies which control module needs to be diagnosed for a communication issue.
- Communication may be available between the body control module (BCM) and the scan tool with the high speed GMLAN serial data system inoperative. This condition is due to the BCM using both the high and low speed GMLAN systems.
- An open in the DLC ground circuit terminal 5 will allow the scan tool to operate but not communicate with the vehicle.
- The engine will not start when there is a total malfunction of the high speed GMLAN serial data bus.
- Technicians may find various Local Area Network (LAN) communication Diagnostic Trouble Codes (DTC) and no low speed GMLAN communications with the scan tool.
- These conditions may be caused by the installation of an aftermarket navigation radio module (see bulletins). Some customers may comment of one or more of the following concerns:
  - Vehicle will not crank
  - Vehicle cranks but will not start
  - Vehicle stability enhancement system warning lights and messages
  - PRNDL gear indicator position errors

Reference Information

Schematic Reference

- Data Communication Schematics
- Control Module References

Connector End View Reference

Component Connector End Views

Description and Operation

Data Link Communications Description and Operation

Electrical Information Reference

- Circuit Testing
- Connector Repairs
- Testing for Intermittent Conditions and Poor Connections
- Wiring Repairs

Scan Tool Reference

Control Module References for scan tool information

Circuit/System Verification

Note: Each control module may need to be disconnected to isolate a circuit fault. Use the schematic to identify the following:

- Control modules the vehicle is equipped with
- High speed GMLAN serial data circuit terminating resistors
- Control module locations on the high speed GMLAN serial data circuits
- Each control module's B+, ignition, earth and high-speed GMLAN serial data circuit terminals

1. Attempt to communicate with all control modules on the high speed GMLAN serial data circuit Refer to Data Link References . Communications should not be available with two or more control modules on the high speed GMLAN serial data circuit.
   If only one control module is not communicating, diagnose that control module only. Refer to DTC U0100-U02FF .
2. Disconnect the scan tool from the X84 data link connector (DLC). The following tests will be done at the DLC connector.
3. Vehicle OFF, and all vehicle systems OFF, all keys at least 3 metres away from vehicle, all access doors closed. It may take up to 2 minutes for all vehicle systems to power down. Test for less than 10 Ω between the ground circuit terminal 5 and ground.
   If greater than the specified range, test the ground circuit for an open/high resistance.
4. Vehicle in Service Mode, test for less than 4.5 V between the serial data circuits listed below and earth:
   - Terminal 6
   - Terminal 14

   If greater than the specified range, test the serial data circuit for a short to voltage. Refer to Testing the Serial Data Circuits for a Short to Voltage.
5. Vehicle OFF, and all vehicle systems OFF, all keys at least 3 metres away from vehicle, all access doors closed. It may take up to 2 minutes for all vehicle systems to power down. Test for greater than 100 Ω between the serial data circuits listed below and ground:
   - Terminal 6
   - Terminal 14

   If less than the specified range, test the serial data circuit for a short to ground. Refer to Testing the Serial Data Circuits for a Short to ground.
6. Test for 50-70 Ω between the serial data circuits terminal 6 and terminal 14.
   If less than 35 Ω, test for a short between the serial data circuits. Refer to Testing the Serial Data Circuits for a Short between the Circuits.

If 35-50 Ω there may be a third terminating resistor between the serial data circuits. This can happen if the incorrect control module is installed. Some control modules are available with and without the terminating resistors installed to reduce the need of terminating resistors in the wiring harness.

If greater than 70 Ω but less than infinite, test the serial data circuit for an open/high resistance. Refer to Testing the Serial Data Circuits for an Open/High Resistance.

If infinite, test the serial data circuits between the DLC and the first connection to the serial data circuit for an open/high resistance.

7. If the serial data circuits test normal, refer to Testing the Control Module Circuits.

Circuit/System Testing

Note: Some control modules with an internal terminating resistor have a loop in the harness that connects the internal terminating resistor to the serial data circuit. When wired this way, test these loop circuits for the appropriate failure mode short to voltage, short to ground, or open/high resistance prior to replacing the control module for each of the following tests.

Testing the Serial Data Circuits for a Short to Voltage

1. Vehicle OFF, disconnect the harness connectors with the high- speed GMLAN serial data circuits at an easily accessible control module.
2. Vehicle in Service Mode, test for greater than 4.5 V between each serial data circuit at the control module connector that was just disconnected and earth. Verify that one or more serial data circuits are greater than 4.5 V.

   If all serial data circuits are less than the specified range, replace the control module that was disconnected.
3. Vehicle OFF, disconnect the harness connectors with the high- speed GMLAN serial data circuits at another control module, in the direction of the circuit shorted to voltage.
4. Vehicle in Service Mode, test for greater than 4.5 V between the serial data circuits at the control module connector that was just disconnected and earth. Verify that one or more serial data circuits are greater than 4.5 V.

   If all serial data circuits are less than the specified range, replace the control module that was just disconnected.
5. Repeat step 3 until one of the follow conditions are isolated:
   - A short to voltage on the serial data circuit between 2 control modules or splice packs, if equipped.
   - A short to voltage on the serial data circuit between a control module and a terminating resistor.

Testing the Serial Data Circuits for a Short to Ground

1. Vehicle OFF, disconnect the harness connectors with the high- speed GMLAN serial data circuits at an easily accessible control module.
2. Vehicle OFF, and all vehicle systems OFF, all keys at least 3 metres away from vehicle, all access doors closed. It may take up to 2 minutes for all vehicle systems to power down. Test for less than 1k Ω between each serial data circuit at the control module connector that was just disconnected and ground. Verify that one or more serial data circuits are less than 1k Ω.

   If all serial data circuits are greater than the specified range, replace the control module that was disconnected.
3. Disconnect the harness connectors with the high speed GMLAN serial data circuits at another control module, in the direction of the circuit shorted to ground.
4. Vehicle OFF, and all vehicle systems OFF, all keys at least 3 metres away from vehicle, all access doors closed. It may take up to 2 minutes for all vehicle systems to power down. Test for less than 1k Ω between the serial data circuits at the control module connector that was just disconnected and ground. Verify that one or more serial data circuits are less than 1k Ω.

   If greater than the specified range for all serial data circuits, replace the control module that was just disconnected.

5. Repeat step 3 until one of the follow conditions are isolated:
   - A short to ground on the serial data circuit between 2 control modules or splice packs, if equipped.
   - A short to ground on the serial data circuit between a control module and a terminating resistor.
   - A short to ground on the serial data circuit between the DLC and the first control module or splice pack.

Testing the Serial Data Circuits for a Short between the Circuits

1. Vehicle OFF, disconnect the harness connectors with the high- speed GMLAN serial data circuits at an easily accessible control module that is not communicating.
2. Vehicle OFF, and all vehicle systems OFF, all keys at least 3 metres away from vehicle, all access doors closed. It may take up to 2 minutes for all vehicle systems to power down. Test for less than 110 Ω between each pair of serial data circuits at the control module connector that was just disconnected. Verify that one pair of serial data circuits are less than 110 Ω.
   If each pair of serial data circuits is greater than the specified range, replace the control module that was disconnected.
3. Connect the harness connectors at the control module that was disconnected.
4. Disconnect the harness connectors with the high speed GMLAN serial data circuits at another control module, in the direction of the circuits shorted together.
5. Vehicle OFF, and all vehicle systems OFF, all keys at least 3 metres away from vehicle, all access doors closed. It may take up to 2 minutes for all vehicle systems to power down. Test for less than 110 Ω between each pair of serial data circuits at the control module connector that was just disconnected. Verify that one pair of serial data circuits are less than 110 Ω.
   If each pair of serial data circuits is greater than the specified range, replace the control module that was just disconnected.
6. Repeat step 3 until one of the following conditions are isolated:
   - Serial data circuits shorted together between 2 control modules or splice packs, if equipped.
   - Serial data circuits shorted together between a control module and a terminating resistor.
   - Serial data circuits shorted together between the DLC and the first control module or splice pack.
   - A shorted terminating resistor.

Testing the Serial Data Circuits for an Open/High Resistance

1. Vehicle OFF, disconnect the harness connectors with the high- speed GMLAN serial data circuits at an easily accessible control module that is not communicating.
2. Vehicle OFF, and all vehicle systems OFF, all keys at least 3 metres away from vehicle, all access doors closed. It may take up to 2 minutes for all vehicle systems to power down. Test for greater than 130 Ω between each pair of serial data circuits at the control module connector that was just disconnected. Verify that one pair of serial data circuits are greater than 130 Ω.
   If each pair of serial data circuits is less than the specified range, replace the control module that was disconnected.
3. Connect the harness connectors at the control module that was disconnected.
4. Disconnect the harness connectors with the high speed GMLAN serial data circuits at another control module, in the direction of the open circuit.
5. Vehicle OFF, and all vehicle systems OFF, all keys at least 3 metres away from vehicle, all access doors closed. It may take up to 2 minutes for all vehicle systems to power down. Test for greater than 130 Ω between each pair of serial data circuits at the control module connector that was just disconnected. Verify that one pair of serial data circuits are greater than 130 Ω.
   If each pair of serial data circuits is less than the specified range, replace the control module that was just disconnected.
6. Repeat step 3 until one of the following conditions are isolated:

- An open/high resistance on the serial data circuit between 2 control modules or splice packs, if equipped.
- An open/high resistance on the serial data circuit between a control module and a terminating resistor.
- An open/high resistance terminating resistor.

Testing the Control Module Circuits

1. Vehicle OFF, disconnect the harness connectors at an easily accessible control module that is not communicating.
2. Vehicle OFF, and all vehicle systems OFF, all keys at least 3 metres away from vehicle, all access doors closed. It may take up to 2 minutes for all vehicle systems to power down. Test for less than 10 Ω between each earth circuit terminal and earth, and at the control module connector that was just disconnected.
   If greater than the specified range, test the earth circuit and earth connection for an open-circuit/high resistance.
3. Vehicle OFF, verify that a test lamp does not illuminate between each ignition circuit terminal and earth.
   If the test lamp does illuminate, test the ignition circuit for a short to voltage. If the circuits test normal, replace the appropriate control module.
4. Vehicle in Service Mode, verify that a test lamp illuminates between each ignition circuit terminal and earth.
   If the test lamp does not illuminate, test the ignition circuit for a short to ground or an open/high resistance. If the circuits test normal, replace the appropriate control module.
5. Vehicle OFF, connect the harness connectors at the control module that was just disconnected.
6. Repeat step 1 at another control module that is not communicating until one of the following conditions are isolated:
   - An open-circuit/high resistance on the earth circuit or earth connection
   - A short-circuit to voltage, a short-circuit to earth or an open-circuit/high resistance on the ignition circuit

Repair Instructions

Perform the Diagnostic Repair Verification after completing the repair.

- GMLAN Wiring Repairs
- Control Module References for control module replacement, setup, and programming

&#169© Copyright Chevrolet. All rights reserved

Scan Tool Does Not Communicate with Low Speed GMLAN Device

Diagnostic Instructions

- Perform the Diagnostic System Check - Vehicle prior to using this diagnostic procedure.
- Review Strategy Based Diagnosis for an overview of the diagnostic approach.
- Diagnostic Procedure Instructions provides an overview of each diagnostic category.

Diagnostic Fault Information

Circuit	Short to Ground	Open/High Resistance	Short to Voltage	Signal Performance
Low Speed GMLAN Serial Data	1	U0100-U02FF*	1	--
Ground (DLC, terminal 5)	--	1*	--	--
* An open between the data link connector serial data circuit terminal 1 or ground circuit terminal 5 and the BCM circuit will only effect the communication with the scan tool. 1. No communication on any low speed GMLAN module				

Circuit/System Description

The serial data is transmitted over a single wire to the appropriate control modules. The transmission speed for GMLAN low-speed is up to 83.33 Kb/s. Under normal vehicle operating conditions, the speed of the bus is 33.33 Kb/s. The control modules toggle the serial data circuit between 0-5 V during normal communications. To wake the control modules connected to the GMLAN low speed serial data circuit, a voltage wake up pulse of 10 V is sent out. If serial data is lost, control modules will set a no communication code against the non-communicating control module. A loss of serial data communications DTC does not represent a failure of the module that set it.

Diagnostic Aids

- Sometimes, while diagnosing a specific customer concern or after a repair, you may notice a history U-code present. However, there is no associated "current" or "active" status. Loss-of- communication U-codes such as these can set for a variety of reasons. Many times, they are transparent to the vehicle operator and technician, and/or have no associated symptoms. Eventually, they will erase themselves automatically after a number of fault-free ignition cycles. This condition would most likely be attributed to one of these scenarios:
  - A control module on the data communication circuit was disconnected while the communication circuit is awake.
  - Power to one or more modules was interrupted during diagnosis

- A low battery condition was present, so some control modules stop communicating when battery voltage drops below a certain threshold.
- Battery power was restored to the vehicle and control modules on the communication circuit did not all re-initialise at the same time.
- If a loss-of-communication U-code appears in history for no apparent reason, it is most likely associated with one of the scenarios above. These are all temporary conditions and should never be interpreted as an intermittent fault, causing you to replace a part.

- Do not replace a control module reporting a U-code. The U-code identifies which control module needs to be diagnosed for a communication issue.
- Communication may be available between the body control module (BCM) and the scan tool with the low speed GMLAN serial data system inoperative. This condition is due to the BCM using both the high and low speed GMLAN systems.
- An open in the low speed GMLAN serial data circuit between the splice pack and a module will only affect that specific module. This type of failure will set a loss of communication DTC for each module effected, and the other modules will still communicate.
- An open-circuit in the data link connector (DLC) ground circuit terminal 5 will allow the scan tool to operate but not communicate with the vehicle.
- The engine may not start when there is a total malfunction of the low speed GMLAN serial data circuit.
- Technicians may find various Local Area Network (LAN) communication Diagnostic Trouble Codes (DTC) and no low speed LAN communications with the scan tool. These conditions may be caused by the installation of an aftermarket navigation radio module (see bulletins). Some customers may comment of one or more of the following concerns:
  - Vehicle will not crank
  - Vehicle cranks but will not start
  - Vehicle stability enhancement system warning lights and messages
  - PRNDL gear indicator position errors

Reference Information

Schematic Reference

Data Communication Schematics

Connector End View Reference

Component Connector End Views

Description and Operation

Data Link Communications Description and Operation

Electrical Information Reference

- Circuit Testing
- Connector Repairs

- Testing for Intermittent Conditions and Poor Connections
- Wiring Repairs

Circuit/System Testing

Note: Use the schematic to identify the following:

- Control modules the vehicle is equipped with
- Control module and splice pack locations on the low speed GMLAN serial data circuit
- The low speed GMLAN serial data circuit terminals for each control module, component, or splice pack

1. Attempt to communicate with all control modules on the low speed GMLAN serial data circuit. Refer to Data Link References . Communications should not be available with two or more control modules on the low speed GMLAN serial data circuit.
   If only one control module is not communicating, diagnose that control module only. Refer to DTC U0100-U02FF .
   If one or more control modules are communicating but not all, refer to Testing the Serial Data Circuit for an Open/High Resistance.
2. Vehicle OFF, disconnect the scan tool from the X84 data link connector (DLC). The following tests will be done at the DLC connector.
3. Vehicle OFF, and all vehicle systems OFF, all keys at least 3 metres away from vehicle, all access doors closed. It may take up to 2 minutes for all vehicle systems to power down. Test for less than 10 Ω between the ground circuit terminal 5 and ground.
   If greater than the specified range, test the ground circuit for an open/high resistance.
4. Vehicle in Service Mode, test for less than 4.5 V between the serial data circuit terminal 1 and earth.
   If greater than the specified range, test the serial data circuit for a short to voltage. Refer to Testing the Serial Data Circuit for a Short to Voltage.
5. Vehicle OFF, and all vehicle systems OFF, all keys at least 3 metres away from vehicle, all access doors closed. It may take up to 2 minutes for all vehicle systems to power down. Test for greater than 100 Ω between the serial data circuit terminal 1 and earth.
   If less than the specified range, test the serial data circuit for a short to ground. Refer to Testing the Serial Data Circuits for a Short to ground.
6. Disconnect the harness connector at the first splice pack closest in the circuit to the DLC.
7. Test for less than 2 Ω between the DLC serial data circuit terminal 1 and the splice pack connector serial data input terminal.
   If greater than the specified range, test the serial data circuit for an open/high resistance. If the circuit tests normal, replace the splice pack.

Testing the Serial Data Circuits for a Short to Voltage

1. Vehicle OFF, disconnect the appropriate harness connectors at the following components:
   - All low speed serial data splice packs
   - Any control module or component that may be between the splice packs
2. Vehicle in Service Mode, test for less than 4.5 V between the DLC serial data circuit terminal 1 and earth.
   If greater than the specified range, repair the short to voltage.
3. Test for less than 4.5 V between each serial data circuit at each component connector and ground.
   If greater than the specified range, perform the appropriate test listed below:
   - Serial data circuits with one control module, test the serial data circuit for a short to voltage. If the circuit tests normal, replace the control module.

   Serial data circuits with 2 or more control modules, test each section of the serial data circuit for a short to voltage. If the circuits test normal, replace the control

- module that causes the short to voltage when connected.

Testing the Serial Data Circuits for a Short to Ground

1. Vehicle OFF, disconnect the appropriate harness connectors at the following components:
   - All low speed serial data splice packs
   - Any control module or component that may be between the splice packs
2. Test for infinite resistance between the DLC serial data circuit terminal 1 and ground.
   If not the specified value, repair the short to ground.
3. Vehicle OFF, and all vehicle systems OFF, all keys at least 3 metres away from vehicle, all access doors closed. It may take up to 2 minutes for all vehicle systems to power down. Test for greater than 100 Ω between each serial data circuit at the splice pack and earth.
   If less than the specified range, perform the appropriate test listed below:
   - Serial data circuits with one control module, test the serial data circuit for a short to ground. If the circuit tests normal, replace the control module.
   - Serial data circuits with 2 or more control modules, test each section of the serial data circuit for a short to ground. If the circuits test normal, replace the control module that causes the short to ground when connected.

Testing the Serial Data Circuit for an Open/High Resistance

1. If equipped with a second splice pack, Vehicle in Service Mode, verify the scan tool communicates with one or more control modules connected to the second splice pack.
   If all control modules on the second splice pack do not communicate, test the serial data circuit between the first and second splice packs for an open/high resistance. If the circuit tests normal, test the second splice pack for an open/high resistance. If the splice pack tests normal, replace any control module or component that may be between those two splice packs.
2. If equipped with a third splice pack, Vehicle in Service Mode, verify the scan tool communicates with one or more control modules connected to the third splice pack.
   If all control modules on the third splice pack do not communicate, test the serial data circuit between the second and third splice packs for an open/high resistance. If the circuit tests normal, test the third splice pack for an open/high resistance. If the splice pack tests normal, replace any control module or component that may be between the those two splice packs.
3. Vehicle OFF, disconnect the splice pack containing the serial data circuits to the control modules that are not communicating.
4. Install a 3 A fused jumper wire between the splice pack connector serial data input terminal and a low speed GMLAN serial data circuit that is not communicating.
5. Vehicle in Service Mode, verify that the scan tool communicates with the control modules connected to the low-speed GMLAN serial data circuit.
   If any control module does not communicate, test each section of the serial data circuit for an open/high resistance. If the circuits test normal, replace the control module that does not communicate when connected.

Repair Instructions

Perform the Diagnostic Repair Verification after completing the diagnostic procedure.

- GMLAN Wiring Repairs

- Control Module References for module replacement, programming and setup

&#169© Copyright Chevrolet. All rights reserved

Data Link References

This table identifies which serial data link that a particular module uses for in-vehicle data transmission. Some modules may use more than one data link to communicate. Some modules may have multiple communication circuits passing through them without actively communicating on that data link. This table is used to assist in correcting a communication malfunction. For the description and operation of these serial data communication circuits refer to Data Link Communications Description and Operation .

Control Module	Data Link Type	Diagnostic Procedure
Schematic Reference: Data Communication Schematics		
K1 14 V Power Module	Powertrain High-Speed GMLAN	DTC U0074
G1 A/C Compressor Control Module	High Speed GMLAN	Scan Tool Does Not Communicate with High Speed GMLAN Device
T18 Battery Charger Control Module	• High Speed GMLAN • High-Voltage Energy Management High-Speed GMLAN	• Scan Tool Does Not Communicate with High Speed GMLAN Device • DTC U007A
K16 Battery Energy Control Module (BECM)	• High Speed GMLAN • High-Voltage Energy Management High-Speed GMLAN • · BECM Dedicated Bus	• Scan Tool Does Not Communicate with High Speed GMLAN Device • DTC U007A • DTC U2401
K9 Body Control Module	• High Speed GMLAN • Low Speed GMLAN • Local Interconnect Network (LIN)	• Scan Tool Does Not Communicate with High Speed GMLAN Device • Scan Tool Does Not Communicate with Low Speed GMLAN Device • DTC U1500-U15BF
K10 Coolant Heater Control Module	Low Speed GMLAN	Scan Tool Does Not Communicate with Low Speed GMLAN Device
K107A Drive Motor 1 Control Module	• High Speed GMLAN • Chassis High Speed GMLAN • Powertrain High-Speed GMLAN	• Scan Tool Does Not Communicate with High Speed GMLAN Device • Scan Tool Does Not Communicate with Chassis High Speed GMLAN Device • DTC U0074
K107B Drive Motor 2 Control Module	• High Speed GMLAN • Chassis High Speed GMLAN • Powertrain High-Speed GMLAN	• Scan Tool Does Not Communicate with High Speed GMLAN Device • Scan Tool Does Not Communicate with Chassis High Speed GMLAN Device

		• DTC U0074
S79D Driver Window Switch	Local Interconnect Network (LIN)	DTC U1500-U15BF
M74D Driver Window Motor	Local Interconnect Network (LIN)	DTC U1500-U15BF
K17 Electronic Brake Control Module (EBCM)	• High Speed GMLAN • Chassis High Speed GMLAN	• Scan Tool Does Not Communicate with High Speed GMLAN Device • Scan Tool Does Not Communicate with Chassis High Speed GMLAN Device
K20 Engine Control Module (ECM)	• High Speed GMLAN • Powertrain High-Speed GMLAN	• Scan Tool Does Not Communicate with High Speed GMLAN Device • DTC U0074
K27 Fuel Pump Control Module	High Speed GMLAN	Scan Tool Does Not Communicate with High Speed GMLAN Device
K33 HVAC Control Module	Low Speed GMLAN	Scan Tool Does Not Communicate with Low Speed GMLAN Device
K112A Hybrid Battery Interface Control Module 1	BECM Dedicated Bus	DTC U2401
K112B Hybrid Battery Interface Control Module 2	BECM Dedicated Bus	DTC U2401
K112C Hybrid Battery Interface Control Module 3	BECM Dedicated Bus	DTC U2401
K112D Hybrid Battery Interface Control Module 4	BECM Dedicated Bus	DTC U2401
K114A Hybrid Powertrain Control Module 1	• High Speed GMLAN • Chassis High Speed GMLAN • Powertrain High-Speed GMLAN	• Scan Tool Does Not Communicate with High Speed GMLAN Device • Scan Tool Does Not Communicate with Chassis High Speed GMLAN Device • DTC U0074
K114B Hybrid Powertrain Control Module 2	• Low Speed GMLAN • High Speed GMLAN • Powertrain High-Speed GMLAN • High-Voltage Energy Management High-Speed GMLAN	• Scan Tool Does Not Communicate with Low Speed GMLAN Device • Scan Tool Does Not Communicate with High Speed GMLAN Device • DTC U0074 • DTC U007A
K36 Inflatable Restraint Sensing and Diagnostic Module (SDM)	Low Speed GMLAN	Scan Tool Does Not Communicate with Low Speed GMLAN Device
P16 Instrument Cluster	Low Speed GMLAN	Scan Tool Does Not Communicate with Low Speed GMLAN Device
K84 Keyless Entry Control Module	Low Speed GMLAN	Scan Tool Does Not Communicate with Low Speed GMLAN Device
S79LR Left Rear Window Switch	Local Interconnect Network (LIN)	DTC U1500-U15BF
B119 Multi-axis Acceleration Sensor Module	Chassis High Speed GMLAN	Scan Tool Does Not Communicate with Chassis High Speed GMLAN Device
K41 Parking Assist Control Module	Low Speed GMLAN	Scan Tool Does Not Communicate with Low Speed GMLAN Device
K83 Parking Brake Control Module	High Speed GMLAN	Scan Tool Does Not Communicate with High Speed GMLAN Device

K65 Passenger Presence Detection Module	Low Speed GMLAN	Scan Tool Does Not Communicate with Low Speed GMLAN Device
S79P Passenger Window Switch	Local Interconnect Network (LIN)	DTC U1500-U15BF
T6 Power Inverter Module	• High Speed GMLAN • Chassis High Speed GMLAN • Powertrain High-Speed GMLAN	• Scan Tool Does Not Communicate with High Speed GMLAN Device • Scan Tool Does Not Communicate with Chassis High Speed GMLAN Device • DTC U0074
K43 Power Steering Control Module	High Speed GMLAN	Scan Tool Does Not Communicate with High Speed GMLAN Device
A11 Radio	Low Speed GMLAN	Scan Tool Does Not Communicate with Low Speed GMLAN Device
S79RR Right Rear Window Switch	Local Interconnect Network (LIN)	DTC U1500-U15BF
K29 Seat Heating Control Module	Low Speed GMLAN	Scan Tool Does Not Communicate with Low Speed GMLAN Device
B99 Steering Wheel Angle Sensor	Chassis High Speed GMLAN	Scan Tool Does Not Communicate with Chassis High Speed GMLAN Device
K71 Transmission Control Module (TCM)	High Speed GMLAN	Scan Tool Does Not Communicate with High Speed GMLAN Device
K73 Telematics Communication Interface Control Module	• High Speed GMLAN • Low Speed GMLAN	• Scan Tool Does Not Communicate with High Speed GMLAN Device • Scan Tool Does Not Communicate with Low Speed GMLAN Device
M75 Windscreen Wiper Motor	Local Interconnect Network (LIN)	DTC U1500-U15BF

© Copyright Chevrolet. All rights reserved

Body Control Module Replacement

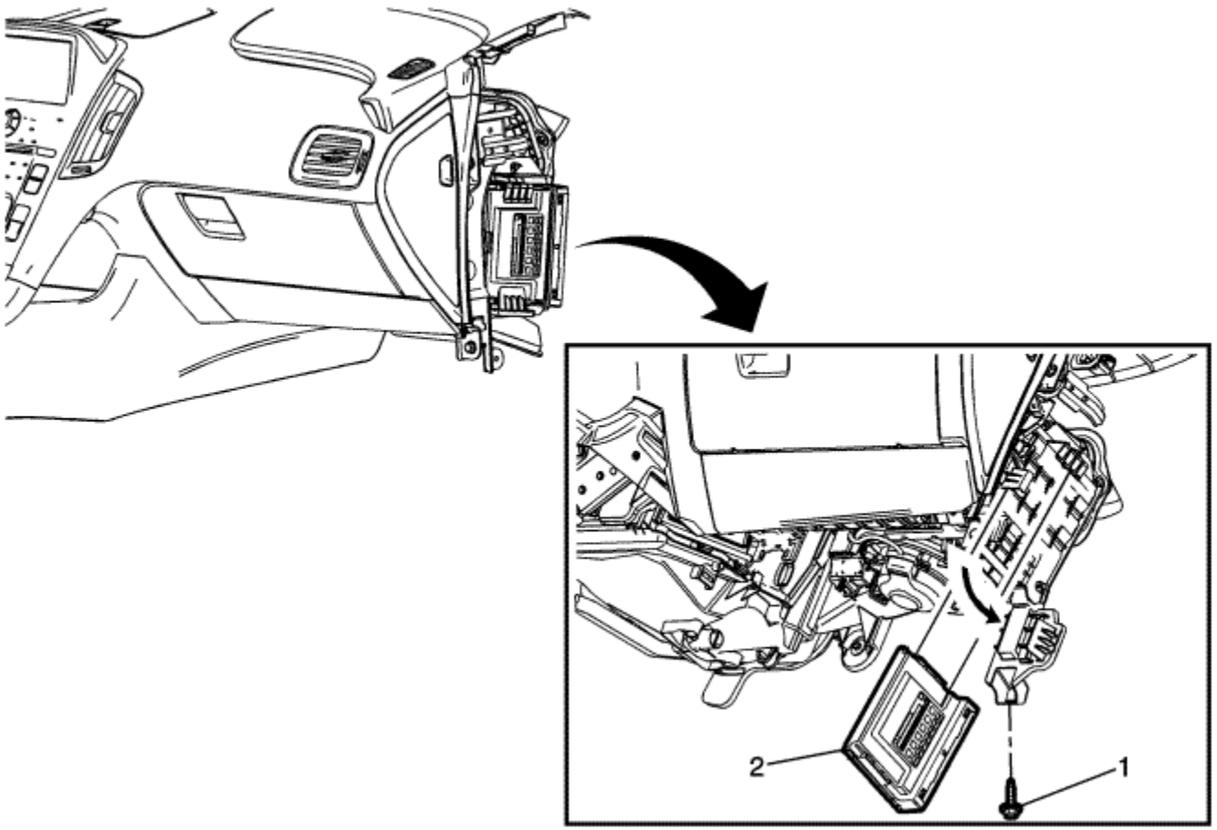

Callout	Component Name

Preliminary Procedure

1. Prepare the heater and air conditioning remote control for replacement. Refer to Control Module References .
2. Disconnect the battery negative cable. Refer to Battery Negative Cable Disconnection and Connection .
3. Remove the communication interface module. Refer to Communication Interface Module Replacement .

4. Remove the instrument panel lower compartment. Refer to Instrument Panel Lower Compartment Replacement .

1	Communication Interface Module Bracket Bolt **Caution:** Refer to Fastener Caution in the Preface section. **Tighten** 4.5 N·m(40 lb in)
2	Body Control Module **Procedure** 1. Remove the bracket mounting bolts and reposition to allow room to slide the module down. 2. Disconnect the electrical connections. 3. For programming and set-up procedures, refer to Control Module References .

© Copyright Chevrolet. All rights reserved

Hybrid Powertrain Control Module 2 Replacement

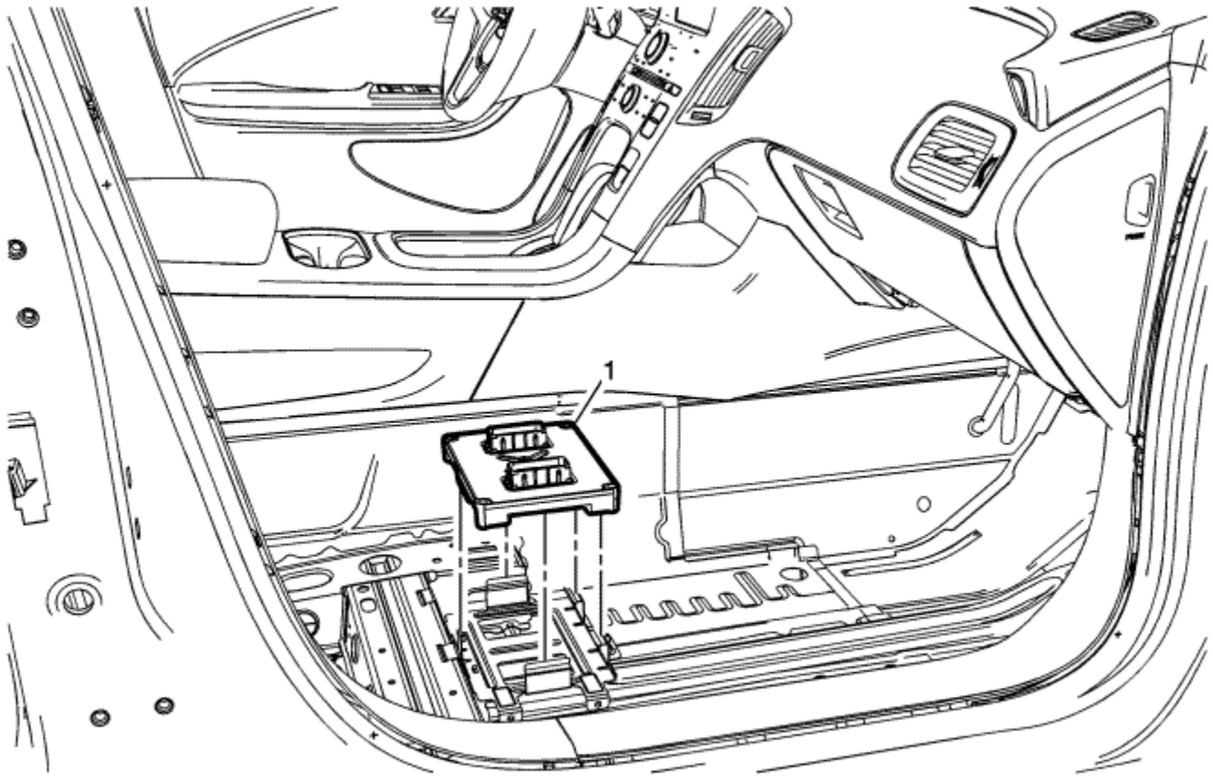

Callout	Component Name
Preliminary Procedure	
1. Disconnect the battery negative cable. Refer to Battery Negative Cable Disconnection and Connection . 2. Remove the passenger front seat. Refer to Driver or Passenger Seat Replacement .	

1	Hybrid Powertrain Control Module 2 **Procedure** 1. Reposition carpet access flap. 2. Disconnect the electrical connections. 3. Using the appropriate tool, gently disengage the module from the four retaining tabs on bracket. 4. For programming and set-up procedures, refer to Control Module References .

© Copyright Chevrolet. All rights reserved

Body Control System Description and Operation

The body control system consists of the body control module (BCM), communications, and various input and outputs. Some inputs, outputs and messages require other modules to interact with the BCM. The BCM also has discrete input and output terminals to control the vehicle's body functions. The BCM is wired to the high speed GMLAN serial data bus, low speed GMLAN serial data bus and Multiple LIN buses and acts as a gateway between them.

Power Mode Master

This vehicle body control module (BCM) functions as the power mode master (PMM). The ignition switch is a low current switch with multiple discrete ignition switch signals to the PMM for determining the power mode that will be sent over the serial data circuits to the other modules that need this information; the PMM will activate relays and other direct outputs of the PMM as needed. Refer to Power Mode Description and Operation for a complete description of power mode functions.

Gateway

The body control module (BCM) in this vehicle functions as a gateway or translator. The purpose of the gateway is to translate serial data messages between the GMLAN high speed bus and the GMLAN low speed bus for communication between the various modules. The gateway will interact with each network according to that network's transmission protocol.

All communication between the BCM and a scan tool is on the high speed GMLAN serial data circuits. A lost communication DTC typically is set in modules other than the module with a communication failure.

Body Control

The various body control module (BCM) input and output circuits are illustrated in the corresponding functional areas on the BCM electrical schematics. Refer to the Body Control System Schematics for more detailed information.

© Copyright Chevrolet. All rights reserved

Data Link Communications Description and Operation

Note: This is an overview of different serial data buses used by GM control modules to communicate with each others. Use schematics to find out which serial data buses are configured for a specific vehicle.

Circuit Description

There are many components in a vehicle that rely on information from other sources, transmit information to other sources, or both. Serial data communication networks provide a reliable, cost effective, way for various components of the vehicle to "talk" to one another and share information.

GM uses a number of different communication buses to insure the timely and efficient exchange of information between control modules. When compared to each other, some of these buses are different in nature as far as speed, signal characteristics, and behaviour. An example of this is the High Speed GMLAN and Low Speed GMLAN buses.

On the other hand, when other buses are compared to each other they have similar characteristics and simply operate in parallel. In this case they are used to group together components which have high interaction. Examples are the High Speed GMLAN, Powertrain Expansion, and Chassis Expansion buses. This allows them to communicate with each other on a bus with reduced message congestion insuring faster and the more timely exchange of information than if all vehicle control modules were on a single bus.

The majority of information that exists within a given network generally stays local; however some information will have to be shared on other networks. Control modules designated as Gateway's perform the function of transferring information between the various buses. A Gateway module is connected to at least 2 buses and will interact with each network according to its message strategy and transmission models.

GMLAN provides the capability for a receiving control module to monitor message transmissions from other control modules in order to determine if messages of interest are not being received. The primary purpose is to allow reasonable default values to be substituted for the information no longer being received. Additionally, a control module may set a Diagnostic Trouble Code to indicate that the control module it is expecting information from is no longer communicating.

High Speed GMLAN Circuit Description

A High Speed GMLAN Bus is used where data needs to be exchanged at a high enough rate to minimise the delay between the occurrence of a change in sensor value and the reception of this information by a control device using the information to adjust vehicle system performance.

The High Speed GMLAN serial data network consists of two twisted wires. One signal circuit is identified as GMLAN-High and the other signal circuit is identified as GMLAN-Low. At each end of the data bus there is a 120 Ω termination resistor between the GMLAN-High and GMLAN-Low circuits.

Data symbols (1s and 0s) are transmitted sequentially at a rate of 500 Kbit/s. The data to be transmitted over the bus is represented by the voltage difference between the

GMLAN-High signal voltage and the GMLAN-Low signal voltage.

When the two wire bus is at rest the GMLAN-High and GMLAN-Low signal circuits are not being driven and this represents a logic "1". In this state both signal circuits are at the same voltage of 2.5 V. The differential voltage is approximately 0 V.

When a logic "0" is to be transmitted, the GMLAN-High signal circuit is driven higher to about 3.5 V and the GMLAN-Low circuit is driven lower to about 1.5 V. The differential voltage becomes approximately 2.0 (+/- 0.5) V.

Chassis High Speed GMLAN Circuit Description

The GMLAN Chassis Expansion Bus is basically a copy of the High Speed GMLAN Bus except that its use is reserved for chassis components. This implementation splits message congestion between two parallel buses helping to insure timely message transmission and reception. Sometimes communication is required between the Chassis Expansion Bus and the primary High Speed GMLAN Bus. This is accomplished by using the Electronic Brake Control Module (EBCM) as the Gateway module. Since the High Speed GMLAN Chassis Expansion Bus and primary High Speed GMLAN Bus operate in the same manner, the diagnostics for each are similar.

Powertrain High-Speed GMLAN Circuit Description

The GMLAN Powertrain Expansion Bus is basically a copy of the High-Speed GMLAN Bus except that its use is reserved for Hybrid powertrain components or Diesel powertrain components in some cases. The bus is optional based upon feature content. Sometimes communication is required between the Powertrain Expansion Bus and the primary High-Speed GMLAN Bus. This is accomplished by using the Engine Control Module (ECM) as the Gateway module. Since the High-Speed GMLAN Powertrain Expansion Bus and the primary High-Speed GMLAN Bus operate in the same manner, the diagnostics for each are similar.

All diagnostic information is available only through the primary high-speed GMLAN bus. However, Service Programming for the high-speed GMLAN powertrain expansion bus is performed only through the auxiliary data connector.

High-Voltage Energy Management High-Speed GMLAN Circuit Description

The GMLAN High-Voltage Energy Management Bus is basically a copy of the High-Speed GMLAN Bus except that its use is reserved for Hybrid charging components of an electric vehicle. Sometimes communication is required between the Low-Speed GMLAN Bus and the High-Voltage Energy Management Bus. This is accomplished by using the Hybrid Powertrain Control Module 2 as the Gateway module. Since the High-Speed GMLAN High-Voltage Energy Management Bus and primary High-Speed GMLAN Bus operate in the same manner, the diagnostics for each are similar.

All diagnostic information is available only through the primary high-speed GMLAN bus.

CAN Graphical Interface (CGI) Circuit Description

This bus is used by the Entertainment sub-system to transfer high-rate display graphics between the Radio and the Info Display Module and/or Radio/HVAC Control. The electrical characteristics of the CAN Graphical Interface (CGI) Bus are very similar to the High Speed GMLAN Bus. The message strategy and construction of messages are different however. Sometimes communication is required between the CAN Graphical Interface Bus and the Low Speed GMLAN Bus. This is accomplished by using the Radio SilverBox as the Gateway module. Since the CAN Graphical Interface Bus and primary High Speed GMLAN Bus have similar electrical characteristics, the diagnostics for each are similar.

In the case where the Info Display Module and Radio/HVAC Control are separate control modules the Info Display Module is responsible for passing information between the Radio and the Radio/HVAC Control. The Radio interfaces only with the Info Display Module and the Info Display Module then communicates with the Radio/HVAC Control through a Local Interconnect Network (LIN) interface.

A bus wake up signal will be generated by the Radio or by the Info Display Module when the system functionality is required. The communication function of the CAN Graphical Interface shall be enabled or disabled based on the voltage level of the Centre Stack Wake. The network will stay awake as long as the circuit voltage is driven low, to less than 1.5 V. Communications are disabled with a high circuit voltage around 5.0 V.

The Radio can execute a warm reset of the Info Display Module if the Info Display Module fails to respond to the Radio's request. The Centre Stack Reset is a low-asserted pull down output (less than 1.5 V) from the Radio to the Info Display Module and has the same electrical characteristics as those for the Centre Stack Wake signal defined above.

Mid Speed GMLAN Circuit Description

The Mid Speed GMLAN Bus is very similar to the High Speed GMLAN Bus except that it uses a slower transmission rate of 125 Kbit/s. This bus is intended for use where the system response time demands that a large amount of data be transmitted in a relatively short amount of time, such as updating a graphics display. As such it has usually been used for infotainment applications. Sometimes communication is required between the Low Speed GMLAN Bus and the Mid Speed GMLAN Bus. This is accomplished by using the Radio (Silverbox) as the Gateway module. Since the Mid Speed GMLAN Bus and primary High Speed GMLAN Bus operate in a similar manner, the diagnostics for each are similar.

Low Speed GMLAN Circuit Description

Low Speed GMLAN Bus is used in applications where a high data rate is not required which allows for the use of less complex components. It is typically used for operator controlled functions where the response time requirements are slower than those required for dynamic vehicle control.

The Low Speed GMLAN Serial Data Network consists of a single wire, ground referenced bus with high side voltage drive. During on road vehicle operation data symbols (1s and 0s) are transmitted sequentially at the normal rate of 33.3 Kbit/s. For component programming only, a special high speed data mode of 83.3 Kbit/s may be used.

Unlike the high speed dual wire networks, the single wire low speed network does not use terminating resistors at either end of the network.

The data symbols to be transmitted over the bus are represented by different voltage signals on the bus. When the Low Speed GMLAN Bus is at rest and is not being driven, there is a low signal voltage of approximately 0.2 V. This represents a logic "1". When a logic "0" is to be transmitted, the signal voltage is driven higher to around 4.0 V or higher.

Local Interconnect Network (LIN) Circuit Description

The Local Interconnect Network (LIN) Bus consists of a single wire with a transmission rate of 10.417 Kbit/s. This bus is used to exchange information between a master control module and other smart devices which provide supporting functionality. This type of configuration does not require the capacity or speed of either a High Speed GMLAN Bus or Low Speed GMLAN Bus and is thus relatively simpler.

The data symbols (1s and 0s) to be transmitted are represented by different voltage levels on the communication bus. When the LIN Bus is at rest and is not being driven, the

signal is in a high voltage state of approximately Vbatt. This represents a logic "1". When a logic "0" is to be transmitted, the signal voltage is driven low to about ground (0.0 V).

Communication Enable Circuit Description

Control modules on GMLAN high speed type networks, excluding the Mid Speed GMLAN Bus and CAN Graphical Interface Bus, enable or disable communication based on the voltage level of this circuit. When the circuit voltage is high (around 12 V), communications are enabled. When the circuit is low, communications are disabled.

The CAN Graphical Interface Bus is similar but uses different voltage levels. See description above for the CAN Graphical Interface Bus.

Data Link Connector (DLC)

The data link connector (DLC) is a standardised 16-cavity connector. Connector design and location is dictated by an industry wide standard, and is required to provide the following:

- Pin 1 Low speed GMLAN communications terminal
- Pin 2 Class 2 communications terminal
- Pin 3 Mid speed GMLAN serial bus (+) terminal
- Pin 4 Scan tool power ground terminal
- Pin 5 Common signal ground terminal
- Pin 6 High speed GMLAN serial data bus (+) terminal
- Pin 7 Keyword communications terminal
- Pin 11 Mid speed GMLAN serial bus (-) terminal
- Pin 12 Chassis high-speed GMLAN serial bus (+) terminal
- Pin 13 Chassis high-speed GMLAN serial bus (-) terminal
- Pin 14 High speed GMLAN serial data bus (-) terminal
- Pin 16 Scan tool power, battery positive voltage terminal

Auxiliary Data Connector

The auxiliary data connector is a standardised 16-cavity connector. This connector shall be available on all vehicles that require service programming for controllers on the Powertrain Expansion Bus for Hybrid applications only. Diagnostics shall be available via the data link connector (DLC), and not provided via the auxiliary data connector. The pinouts for this auxiliary data connector are as follows:

- Pin 3 High-voltage energy management high-speed GMLAN serial bus (+) terminal
- Pin 4 Scan tool power ground terminal
- Pin 5 Common signal ground terminal
- Pin 8 Ground terminal for auxiliary data connector identification
- Pin 11 High-voltage energy management high-speed GMLAN serial bus (-) terminal

- Pin 12 Powertrain high-speed GMLAN serial bus (+) terminal
- Pin 13 Powertrain high-speed GMLAN serial bus (-) terminal
- Pin 16 Scan tool power, battery positive voltage terminal

Serial Data Reference

The scan tool communicates over the various buses on the vehicle. When a scan tool is installed on a vehicle, the scan tool will try to communicate with every control module that could be optioned into the vehicle. If an option is not installed on the vehicle, the scan tool will display No Comm for that optional control module. In order to avert misdiagnoses of No Communication with a specific control module, refer to Data Link References for a list of control modules, the buses they communicate with, and the RPO codes for a specific control module.

&#169© Copyright Chevrolet. All rights reserved

Cigar Lighter/Power Outlet Schematics

Cigarette Lighter/Power Outlets

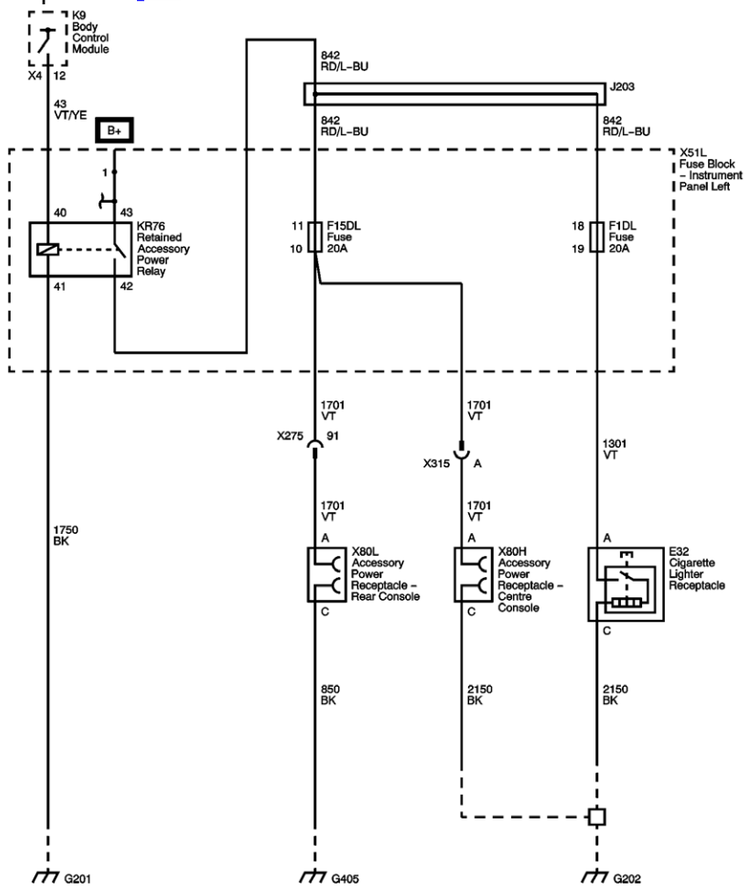

Master Electrical Component List

F1DL, F2DL, F3DL, F4DL, F5DL, F6DL, F7DL, F10DL, F11DL and F15DL Fuses

G201, G203, G205, G304, G401 and G404

G405

G201, G203, G205, G304, G401 and G404

© Copyright Chevrolet. All rights reserved

Symptoms - Power Outlets

Visual/Physical Inspection

- Inspect for aftermarket devices which can affect the operation of the power outlets. Refer to Checking Aftermarket Accessories .
- Inspect the accessible system components or the visible system components for obvious damage or for obvious conditions which can cause the symptom.

Intermittent

Electrical connections or wiring may be the cause of intermittent conditions. Refer to Testing for Intermittent Conditions and Poor Connections .

Symptom List

Refer to Power Outlet Receptacle Malfunction - DTC B1445 in order to diagnose the system.

&#169© Copyright Chevrolet. All rights reserved

Power Outlet Receptacle Malfunction - DTC B1445

Diagnostic Instructions

- Perform the Diagnostic System Check - Vehicle prior to using this diagnostic procedure.
- Review Strategy Based Diagnosis for an overview of the diagnostic approach.
- Diagnostic Procedure Instructions provides an overview of each diagnostic category.

DTC Descriptor

DTC B1445 02: Control Module Voltage Output Circuit Short to Ground

Diagnostic Fault Information

Circuit	Short to Ground	Open/High Resistance	Short to Voltage	Signal Performance
Relay Switch B+	1	1	--	--
Relay Coil Ignition	B1445 02	1	2	--
Relay Switch Control	1	1	2	--
Relay Coil Ground	--	1	--	--
Ground	--	1	--	--
1. Accessory Power Receptacle or Cigarette Lighter Malfunction 2. Accessory Power Receptacle or Cigarette Lighter Always ON				

Circuit/System Description

The body control module (BCM) controls the wired power components by applying voltage to the ignition voltage circuit at harness connector X4 terminal 12. Voltage is applied when the vehicle power mode is Vehicle ON or Vehicle in Service Mode.

Conditions for Running the DTC

- The system voltage is between 9–16 V.
- The DTC can only set when the output is actively being requested by the module.

Conditions for Setting the DTC

The DTC will set only when the module requests the output and there is a short to ground in the ignition voltage circuit.

Action Taken When the DTC Sets

The module output driver will be shut down and not supply voltage to the circuit.

Conditions for Clearing the DTC

- The current DTC will clear when the malfunction is no longer present.
- A history DTC clears when the module power mode cycle counter reaches the reset threshold of 50, without a repeat of the malfunction.

Reference Information

Schematic Reference

Cigar Lighter/Power Outlet Schematics

Connector End View Reference

Component Connector End Views

Description and Operation

Power Outlets Description and Operation

Electrical Information Reference

- Circuit Testing
- Connector Repairs
- Testing for Intermittent Conditions and Poor Connections
- Wiring Repairs

Circuit/System Verification

Install a 12 V DC accessory into a appropriate X80 Accessory Power Receptacle or activate the E32 Cigarette Lighter Receptacle. Vehicle in Service Mode, command the Auxiliary Power Relay Command ON and OFF with a scan tool. The KR76 Retained Accessory Power Relay should click and the 12 V DC accessory or the E32 Cigarette Lighter Receptacle should have power.

Circuit/System Testing

DTC B1445 02 and Accessory Power Receptacle or Cigarette Lighter Malfunction

1. Vehicle OFF, disconnect the KR76 Retained Accessory Power Relay.
2. Test for less than 5 Ω between the ground circuit terminal 41 and ground.
   If greater than the specified range, test the ground circuit for an open/high resistance.
3. Verify that a test lamp does not illuminate between the control circuit terminal 40 and earth.
   If the test lamp illuminates, test the control circuit for a short to voltage.
4. Vehicle in Service Mode, verify that a test lamp illuminates between the ignition circuit terminal 40 and earth.
   If the test lamp does not illuminate, test the ignition circuit for a short to ground or an open/high resistance.
5. Verify that a test lamp illuminates between the B+ circuit terminal 43 and earth.
   If the test lamp does not illuminate, test the B+ circuit for a short to ground or an open/high resistance. If the circuit tests normal and the B+ circuit fuse is open, test the control circuit terminal 42 for a short to earth.
6. Disconnect the harness connector at the inoperative X80 Accessory Power Receptacle or E32 Cigarette Lighter Receptacle.
7. Test for less than 5 Ω between the ground circuit terminal C and ground.
   If greater than the specified range, test the ground circuit for an open/high resistance.
8. Connect the harness connector at the appropriate X80 Accessory Power Receptacle or E32 Cigarette Lighter Receptacle.
9. Connect a 20 A fused jumper wire between the KR76 Retained Accessory Power Relay B+ circuit terminal 43 and the control circuit terminal 42. Verify that the accessory has power.
   If the accessory does not have power, test the control circuit for a short to ground or an open/high resistance. If the circuit tests normal, test or replace the appropriate X80 Accessory Power Receptacle or E32 Cigarette Lighter Receptacle.
10. If all circuits test normal, test or replace the KR76 Retained Accessory Power Relay.

Component Testing

Relay Test

1. Vehicle OFF, disconnect the KR76 Retained Accessory Power Relay.
2. Test for 60-180 Ω between terminals 40 and 41.
   If not within the specified range, replace the relay.
3. Test for infinite resistance between the following terminals:
   - 43 and 40
   - 43 and 42

   43 and 41

-
- 41 and 42

  If not the specified value, replace the KR76 Retained Accessory Power Relay.

4. Install a 20 A fused jumper wire between relay terminal 40 and 12 V. Install a jumper wire between relay terminal 41 and earth. Test for less than 2 Ω between terminals 42 and 43.
   If greater than specified range, replace the KR76 Retained Accessory Power Relay.

Repair Instructions

Perform the Diagnostic Repair Verification after completing the diagnostic procedure.

- Accessory Power Receptacle Replacement
- Relay Replacement : Within an Electrical Center → Attached to Wire Harness

&#169© Copyright Chevrolet. All rights reserved

Accessory Power Receptacle Replacement

Special Tools

EL-42059 Cigar Lighter Socket Remover

For equivalent regional tools, refer to Special Tools .

Removal Procedure

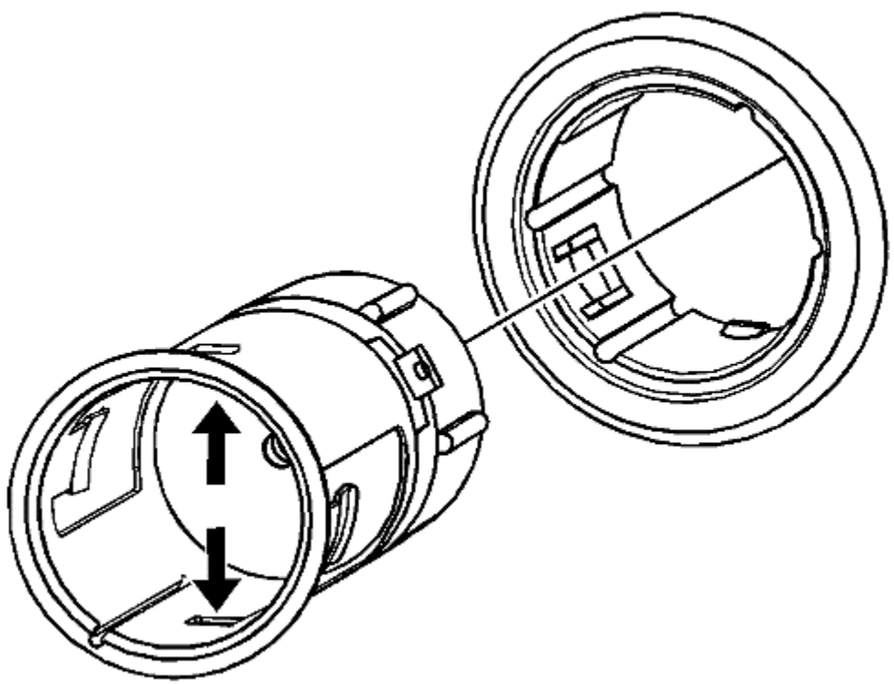

1. Remove the auxiliary power outlet fuse from the fuse block.
2. Remove the receptacle:

2.1. Look into the receptacle. There are two 3 mm (0.11 in) tab windows 12 mm (0.47 in) from the front of the receptacle. The *EL-42059* remover pushes the plastic latches from these tab windows and the receptacle can be pulled straight out.
2.2. Place one side of the "T" portion of the *EL-42059* remover into the tab window. The *EL-42059* remover will not fit straight into the receptacle. Angle the slightly for insertion into the receptacle.
2.3. Insert the other side of the "T" into the opposite tab window.

You must move the *EL-42059* remover handle horizontally to engage the other tab window.

2.4. Use the *EL-42059* remover to pull the receptacle straight out.

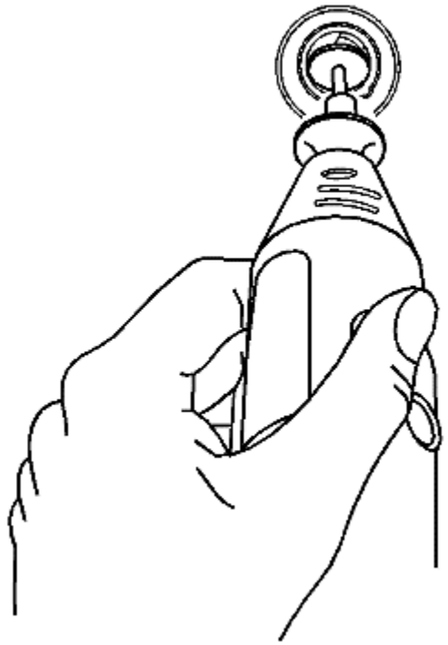

3. If *EL-42059* remover tool fails to release the lighter socket from the retainer, perform the following alternate method:
   3.1. Insert a small grinding tool with a cutoff wheel into the socket.
   3.2. Remove the plastic latches in the 3 mm (0.11 in) square windows.
   3.3. Use the *EL-42059* remover as directed above to remove the socket.

Installation Procedure

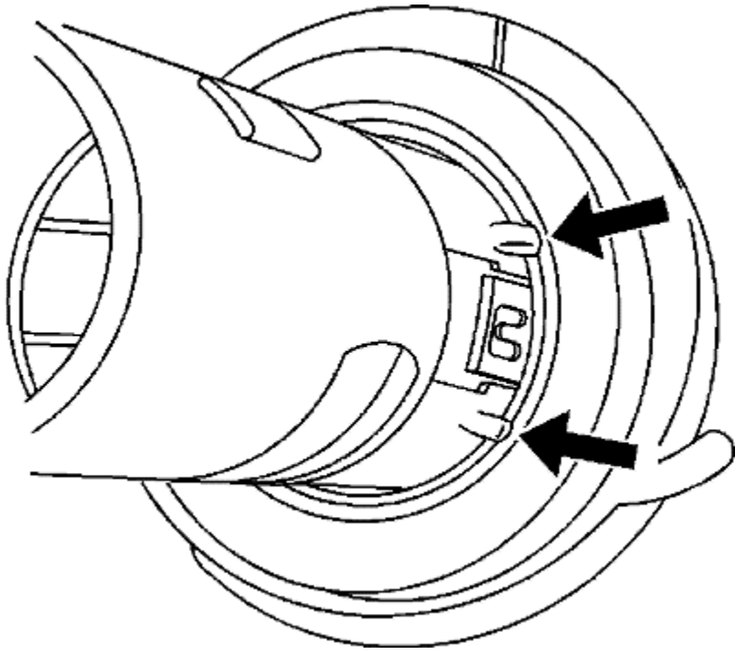

1. Route the connector through the retainer. Align the accessory power receptacle retainer to the slot in the opening.
2. Install the retainer by pressing into place fully seated.
3. Connect the electrical connector to the receptacle.
4. Align the tabs on the receptacle to the slots in the retainer. Install the accessory power receptacle by pressing into place until fully seated.
5. Install the accessory power receptacle fuse.

© Copyright Chevrolet. All rights reserved

Power Outlets Description and Operation

12 Volt Power Outlet Receptacle Description and Operation

The accessory power receptacles and cigarette lighter receptacle are supplied with 12 V when the vehicle is in Service Mode or in Vehicle ON Mode.

© Copyright Chevrolet. All rights reserved

Special Tools

Illustration	Tool Number/ Description
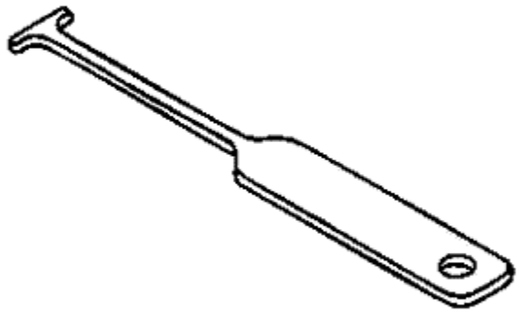	EL 42059 BO 48871 J 42059 Cigar Lighter Socket Remover

© Copyright Chevrolet. All rights reserved

Fastener Tightening Specifications

Application	Specification	
	Metric	English
Accessory Wiring Junction Block Harness Connector Bolts	10 N·m	89 lb in
Accessory Wiring Junction Block Retainer Base Nut	20 N·m	15 lb ft
Battery Cable Nut	7 N·m	62 lb in
Body Harness Terminal Nuts	17 N·m	150 lb in

© Copyright Chevrolet. All rights reserved

Harness Routing Views

Figure 1: Front Fascia Harness Routing
Figure 2: Front of Engine Compartment Harness Routing
Figure 3: Left Side of Engine Compartment Harness Routing
Figure 4: Right Side of Engine Compartment Harness Routing
Figure 5: Engine Harness Routing
Figure 6: Left Side of Passenger Compartment Harness Routing
Figure 7: Right Side of Passenger Compartment Harness Routing
Figure 8: Headliner Harness Routing
Figure 9: Instrument Panel Harness Routing
Figure 10: Center Console Harness Routing
Figure 11: Driver Door Harness Routing
Figure 12: Passenger Door Harness Routing
Figure 13: Left Rear Door Harness Routing
Figure 14: Right Rear Door Harness Routing
Figure 15: Liftgate Harness Routing
Figure 16: Left Side of Luggage Compartment Harness Routing
Figure 17: Right Side of Luggage Compartment Harness Routing
Figure 18: Rear of Vehicle Harness Routing
Figure 19: Left Rear of Vehicle Harness Routing
Figure 20: Underbody Harness Routing
Figure 21: High-Voltage Cable Routing

© Copyright Chevrolet. All rights reserved

Electrical Schematic Symbols

Table 1: Voltage Indicators
Table 2: General Icons
Table 3: Switch Position Icons
Table 4: Module Circuit Function Icons
Table 5: Harness Components
Table 6: Component Parts
Table 7: Switches and Relays
Table 8: Devices and Sensors

Voltage Indicators

Symbol	Description
	Battery Voltage
	Ignition Switch - Off Position

	Ignition Switch - Accessory Position
	Ignition Switch - Run Position
	Ignition Switch - Start Position

General Icons

Symbol	Description
	Master Component List Icon This icon is used on the schematic to link to the Master Electrical Component List.
	Description and Operation Icon This icon is used on the schematic to link to the Description and Operation of that particular system.

	Computer Programming Icon This icon is used on the schematic to link to Control Module References, which identifies which components need programming upon replacement.
	Next Schematic Page Icon This icon is used on the schematic to navigate to the next schematic in the subsystem.
	Previous Schematic Page Icon This icon is used on the schematic to navigate to the previous schematic in the subsystem.

	Supplemental Inflatable Restraint (SIR) or Supplemental Restraint System (SRS) Icon This icon is used to alert the technician that the system contains SIR/SRS components that require certain precautions before servicing.
	Information Icon This icon is used to alert the technician that there is additional information that will aid in servicing a system.
	Danger - High Voltage Icon This icon is used to alert the technician that a component/system contains 300 volt circuits.

	High Voltage Icon This icon is used to alert the technician that a component/system contains voltage greater than 42 volts but less than 300 volts.
	Caution Icon This icon is used to advise the technician to use caution when servicing this component.
	Functional Serial Data Communication This icon is used to show the technician that the serial data circuit detail is shown incomplete. It also provides an active link to the Data Communication Schematics where the circuit is shown complete.

Switch Position Icons

Symbol	Description

	Generic Up Arrows
	Generic Down Arrows
   	Generic Left Arrows

	Generic Right Arrows
	Generic Express Down Arrows
	On/Off Icon

	Generic Lock Icon
	Generic Unlock Icon
	Generic Window Switch Positions - 4 Door

	Generic Window Switch Positions - 2 Door

Module Circuit Function Icons

Symbol	Description
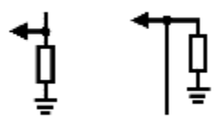	I/O Pull-Down Resistors (-)
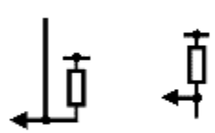	I/O Pull-Up Resistors (+)

	I/O High-Side Drive Switch (+)
	I/O Low-Side Drive Switch (+)
	I/O Bidirectional Switch (+/-)
	Pulse-Width Modulation Symbol

B+	Battery Voltage
IGN	Ignition Voltage
	Voltage Reference

5V	
5V AC	A/C Voltage
	Low Reference
	Ground

	Serial Data
	Aerial Signal - In
	Aerial Signal - Out

	Brake Apply

Harness Components

Symbol	Description
	Fuse

	Fuse Supplied by a Relay
	Circuit Breaker
	Fusible Link

	Ground
	Case Ground
	Inline Harness Connector

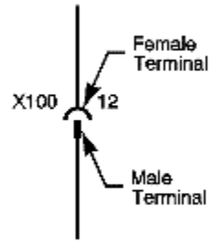	
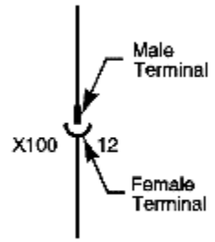	Inline Harness Connector
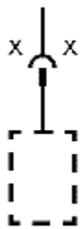	Pigtail Connection
	Pigtail Connection

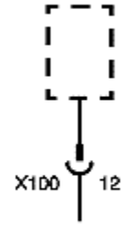	
	Provisional or Diagnostic Connector
	Blunt Cut Wire
	Incomplete Physical Splice

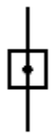	Complete Physical Splice - 2 Wires
	Complete Physical Splice - 3 or more wires
	Wire Crosses

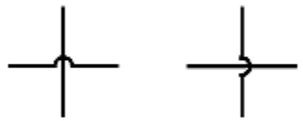	
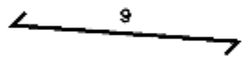	Twisted Wires
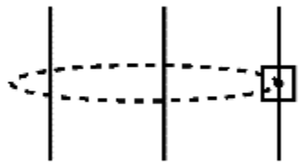	Shield
	Circuit References

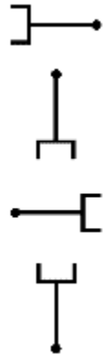	
	Circuit Continuation Arrowheads
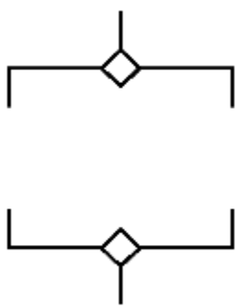	Option Breakpoint

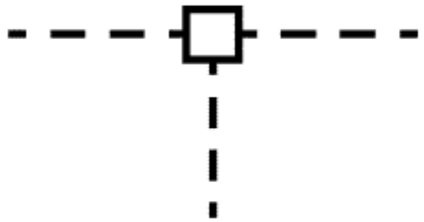	Ground Circuit Connection
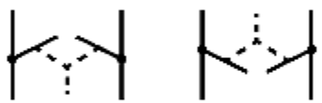	Connector Shorting Clip

Component Parts

Symbol	Description
	Partial Component When a component is represented in a dashed box, the component or its wiring is not shown in its entirety.

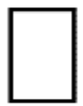	Entire Component When a component is represented in a solid box the component or its wiring is shown in its entirety.
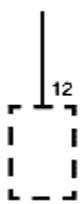	Connector Directly Attached to Component
	Pigtail Connector

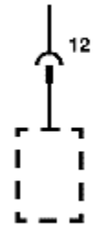	

Switches and Relays

Symbol	Description
	Accessory Power Outlet
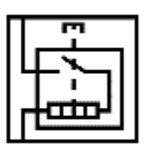	Cigar Lighter

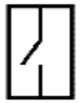	Switch - 2 Position Normally Open
	Switch - 2 Position Normally Closed
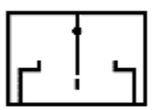	Switch - Rocker
	Switch - Contact Plate (1 Wire)

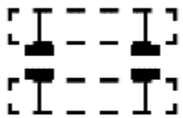	Switch - Contact Plate (2 Wire)
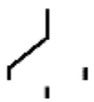	Switch - 3 Position
	Switch - 4 Position

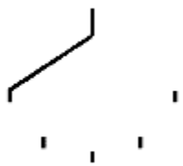	Switch - 5 Position
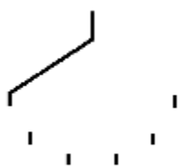	Switch - 6 Position
	Switch Actuator - Push (Momentary)

	Switch Actuator - Push (Latching)
	Switch Actuator - Pull (Momentary)
	Switch Actuator - Pull (Latching)

	Switch Actuator - Rotate (Momentary)
	Switch Actuator - Rotate (Latching)
	Switch Actuator - Slide (Momentary)

	Switch Actuator - Slide (Latching)
	Switch Actuator - Pressure (Momentary)
	Switch Actuator - Temperature (Momentary)

	Switch Actuator - Volume (Latching)
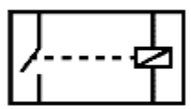	4-Pin Single Pole/Throw Relay - Normally Open
	5-Pin Relay - Normally Closed

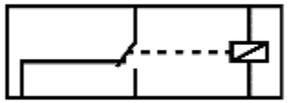	

Devices and Sensors

Symbol	Description
	Battery
	Battery Assembly - Hybrid

	Single Filament Light Bulb
	Double Filament Light Bulb
	Light Emitting Diode (LED)
	Photo Sensor

	Gauge
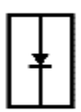	Diode
	Capacitor

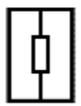	Resistor
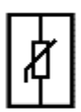	Variable Resistor
	Variable Resistor - NTC

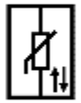	
	Breakable Wire
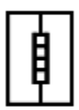	Heating Element
	Position Sensor

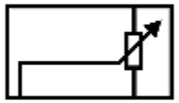	
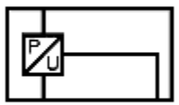	Pressure Sensor
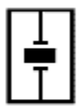	Knock Sensor
	Inductive Type Sensor - 2-Wire

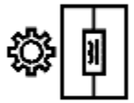	
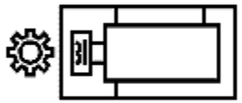	Inductive Type Sensor - 3-Wire
	Hall Effect Sensor - 2-Wire
	Hall Effect Sensor - 3-Wire

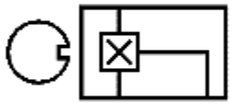	
	Oxygen Sensor - 2-Wire
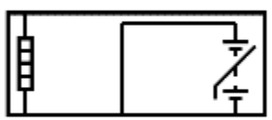	Heated Oxygen Sensor - 4-Wire
	Solenoid - Actuator

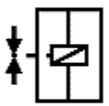	Solenoid - Valve
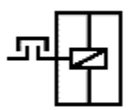	Clutch
	Motor

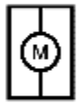	
	Motor with PTC
	Aerial
	Speaker

	Horn
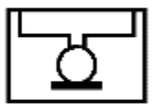	Microphone
	Airbag

	SIR Coil
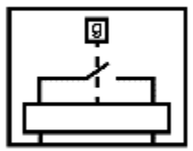	SIR Impact Sensor

© Copyright Chevrolet. All rights reserved

Vehicle Zoning Strategy - Passenger Car

All grounds, in-line connectors, pass-through grommets, and splices have identifying numbers that correspond to where they are located in the vehicle. The following table explains the numbering system.

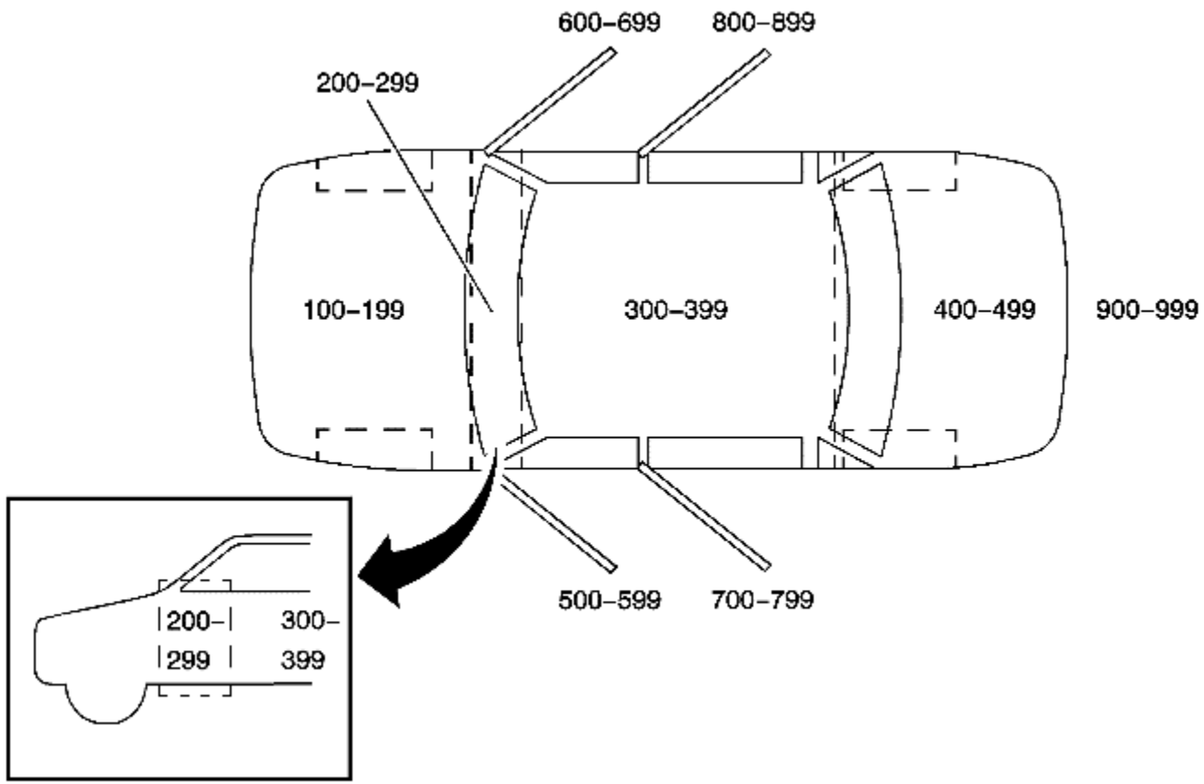

Callout Numbers	Zone Description
100-199	Engine compartment- All forward of the dash panel Note: 001-099 are additional for the engine compartment - ONLY to be used if all 100-199 items are used

200-299	Within the instrument panel area
300-399	Passenger compartment - From the instrument panel to the rear wheelhouse
400-499	Luggage compartment - From the rear wheelhouse to the rear of the vehicle
500-599	Within the left front door
600-699	Within the right front door
700-799	Within the left rear door
800-899	Within the right rear door
900-999	Within the luggage compartment lid or hatch

© Copyright Chevrolet. All rights reserved

Power Distribution Schematics

Figure 1: X50D Fuse Block - Battery and X50B Fuse Block - Underbonnet Auxiliary Bussing
Figure 2: X50A Fuse Block - Underbonnet Bussing
Figure 3: S83 Vehicle On/Off Switch
Figure 4: F32UA, F33UA, F50UA, F51UA, F52UA, F53UA and F54UA Fuses
Figure 5: F1UA, F2UA, F3UA, F4UA, F21UA, F30UA and F34UA Fuses
Figure 6: F6UA, F9UA, F22UA, F23UA, F40UA, F41UA and F43UA Fuses
Figure 7: F10UA, F11UA, F12UA, F15UA, F17UA, F19UA and F39UA Fuses
Figure 8: F31UA, F35UA, F37UA, F42UA, F44UA and F48UA Fuses
Figure 9: F1DL, F2DL, F3DL, F4DL, F5DL, F6DL, F7DL, F10DL, F11DL and F15DL Fuses
Figure 10: F4DR, F5DR, F6DR, F7DR, F8DR, F9DR, F10DR, F11DR and F12DR Fuses
Figure 11: F2RA, F3RA, F4RA, F5RA, F7RA, F8RA, F10RA, F12RA and F13RA Fuses
Figure 12: F6RA, F11RA, F14RA and F16RA Fuses

© Copyright Chevrolet. All rights reserved

Power Moding Schematics

Power Moding

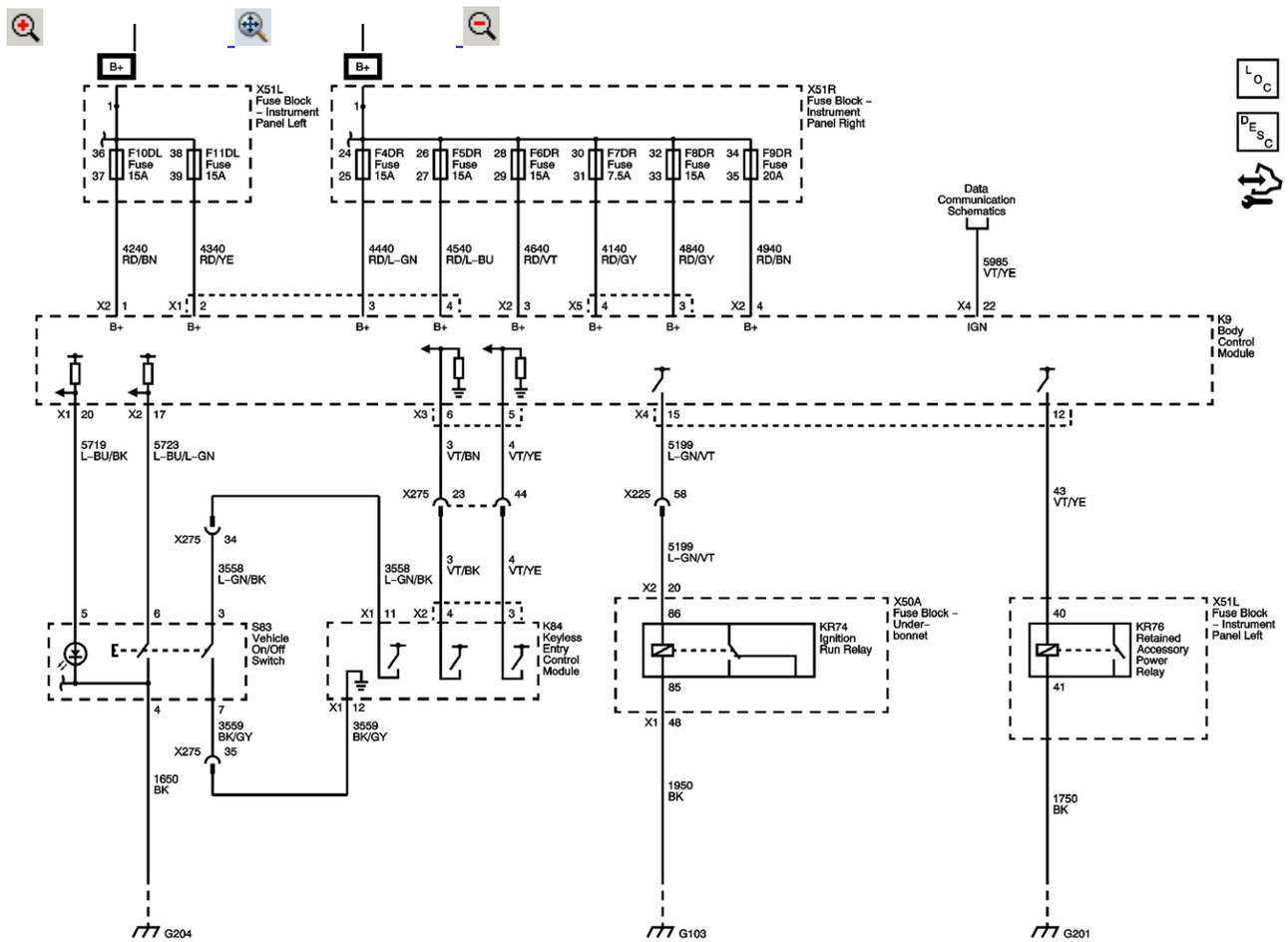

Master Electrical Component List

Power Mode Description and Operation

F1DL, F2DL, F3DL, F4DL, F5DL, F6DL, F7DL, F10DL, F11DL and F15DL Fuses

F4DR, F5DR, F6DR, F7DR, F8DR, F9DR, F10DR, F11DR and F12DR Fuses

Data Communication Schematics

Cigarette Lighter/Power Outlets

G204

G103, G104 and G105

© Copyright Chevrolet. All rights reserved

Ground Distribution Schematics

Figure 1: G101 and G102
Figure 2: G103, G104 and G105
Figure 3: G106, G109, G110, G112, G113 and G117
Figure 4: G201, G203, G205, G304, G401 and G404
Figure 5: 202
Figure 6: G204
Figure 7: G301 and G406
Figure 8: G302
Figure 9: G403
Figure 10: G405

© Copyright Chevrolet. All rights reserved

Master Electrical Component List

Code	Name	Option	Location	Locator View	Connector End View
A4	Hybrid/EV Battery Pack	-	Under the centre of the vehicle	-	• A4 Hybrid/EV Battery Pack X1 • A4 Hybrid/EV Battery Pack X2 • A4 Hybrid/EV Battery Pack X3 • A4 Hybrid/EV Battery Pack X4 • A4 Hybrid/EV Battery Pack X5 • A4 Hybrid/EV Battery Pack X6 • A4 Hybrid/EV Battery Pack X7
A7	Fuel Pump and Level Sensor Assembly	-	Under the vehicle, in the fuel tank	Underbody - Fuel System Components	A7 Fuel Pump and Level Sensor Assembly
A9A	Outside Rearview Mirror - Driver	-	Outside the vehicle, at the front of the driver door	Driver Door Components	-
A9B	Outside Rearview Mirror - Passenger	-	Outside the vehicle, at the front of the passenger door	Passenger Door Components	-
A10	Inside Rearview Mirror	-	In the passenger compartment, at the top centre of the windscreen	Headliner Components	A10 Inside Rearview Mirror
A11	Radio	-	In the passenger compartment, In the centre of the instrument panel, behind the radio/HVAC control	Instrument Panel Components (2 of 2)	• A11 Radio X1 • A11 Radio X4
A20	Radio/HVAC Control	-	In the passenger compartment, at the middle of the instrument panel	Instrument Panel Components (1 of 2)	A20 Radio/HVAC Control
A23C	Liftgate Latch Assembly	-	At the rear centre of the vehicle, in the liftgate	Liftgate Components	A23C Tailgate Latch Assembly
A23D	Door Latch Assembly - Driver	-	In the passenger compartment, in the rear middle of the driver's door	Driver Door Components	A23C Door Catch Assembly - Driver
			In the passenger compartment, in the rear middle of the left	Left Rear Door	A23LR Door Catch Assembly -

A23LR	Door Latch Assembly - Left Rear	--	rear door	Components	Left Rear
A23P	Door Latch Assembly - Passenger	-	In the passenger compartment, in the rear middle of the passenger door	Passenger Door Components	A23P Door Catch Assembly - Passenger
A23RR	Door Latch Assembly - Right Rear	--	In the passenger compartment, in the rear middle of the right rear door	Right Rear Door Components	A23RR Door Catch Assembly - Right Rear
B1	A/C Refrigerant Pressure Sensor	--	In the engine compartment, at the upper right side of the A/C condenser, in the high-pressure line	Engine Compartment Components - Front	B1 A/C Refrigerant Pressure Sensor
B1C	A/C Low Side Pressure Sensor	-	In the engine compartment, at the front of the engine, attached to the A/C line	Right Front of Engine Components	B1C A/C Low-Side Pressure Sensor
B5LF	Wheel Speed Sensor - Left Front	--	Under the vehicle, mounted to the left front steering knuckle	Underbody - Wheel Components	B5LF Wheel Speed Sensor - Left Front
B5LR	Wheel Speed Sensor - Left Rear	--	Under the vehicle, mounted to the left rear suspension	Underbody - Wheel Components	B5LR Wheel Speed Sensor - Left Rear
B5RF	Wheel Speed Sensor - Right Front	--	Under the vehicle, mounted to the right front steering knuckle	Underbody - Wheel Components	B5RF Wheel Speed Sensor - Right Front
B5RR	Wheel Speed Sensor - Right Rear	--	Under the vehicle, mounted to the right rear suspension	Underbody - Wheel Components	B5RR Wheel Speed Sensor - Right Rear
B7B	Air Temperature Sensor - Duct Lower	-	In the passenger compartment, behind the instrument panel, attached to the left lower HVAC duct	Instrument Panel - HVAC Components	B7B Air Temperature Sensor - Duct Lower
B7F	Air Temperature Sensor - Duct Upper	-	In the passenger compartment, behind the instrument panel, attached to the left upper HVAC duct	Instrument Panel - HVAC Components	B7F Air Temperature Sensor - Duct Upper
B9	Ambient Air Temperature Sensor	-	At the right front corner of the vehicle, behind the right side of the front fascia	Engine Compartment Components - Front	B9 Ambient Air Temperature Sensor
B10B	Ambient Light/Sunload Sensor	-	In the passenger compartment, at the top centre of the instrument panel	Instrument Panel Components (1 of 2)	B10B Ambient Light/Sunload Sensor
B14A	Transmission Output Shaft Speed Sensor	-	In the engine compartment, internal to the transmission	-	B14A Transmission Output Shaft Speed Sensor
B15	Transmission Internal Mode Switch	-	In the engine compartment, internal to the transmission	-	• B15 Transmission Internal Mode Switch X1 • B15 Transmission Internal Mode Switch X2
B18	Battery Current Sensor	--	In the luggage compartment, under the storage compartment floor, on the negative battery cable	Luggage Compartment Components	B18 Battery Current Sensor
B20	Brake Fluid Level Switch	--	In the left rear of the engine compartment, at the bottom of the brake fluid reservoir	Engine Compartment Components - Left	B20 Brake Fluid Level Switch
B22	Brake Pedal Position Sensor	--	in the passenger compartment, under the driver side of the instrument panel, connected to the brake pedal	Instrument Panel Components (2 of 2)	B22 Brake Pedal Position Sensor

B23E	Camshaft Position Sensor - Exhaust	-	In the right front of the engine compartment, on the right front of the cylinder head	Right Front of Engine Components	B23E Camshaft Position Sensor - Exhaust
B23F	Camshaft Position Sensor – Inlet	-	In the right front of the engine compartment, on the right rear of the cylinder head	Right Front of Engine Components	B23F Camshaft Position Sensor - Intake
B24	Mobile Phone Microphone	-	In the passenger compartment, at the front centre of the headliner, in the overhead console	Headliner Components	B24 Cellular Phone Microphone
B26	Crankshaft Position Sensor	-	In the left rear of the engine compartment, in the left rear of the engine block, above the oil pan	Left Rear of Engine Components	B26 Crankshaft Position Sensor
B30	Hybrid/EV Battery Pack Current Sensor	-	Under the vehicle, in the Hybrid/EV battery pack, between section 1 and 2	-	B30 Hybrid Battery Pack Current Sensor
B32A	Hybrid/EV Battery Pack Temperature Sensor 1	-	Under the vehicle, in the Hybrid/EV battery section 3, part of Hybrid/EV battery module 1	Underbody - Hybrid/EV Battery Pack Section 3	-
B32B	Hybrid/EV Battery Pack Temperature Sensor 2	-	Under the vehicle, in the Hybrid/EV battery section 3, part of Hybrid/EV battery module 1	Underbody - Hybrid/EV Battery Pack Section 3	-
B32C	Hybrid/EV Battery Pack Temperature Sensor 3	-	Under the vehicle, in the Hybrid/EV battery section 3, part of Hybrid/EV battery module 2	Underbody - Hybrid/EV Battery Pack Section 3	-
B32D	Hybrid/EV Battery Pack Temperature Sensor 4	-	Under the vehicle, in the Hybrid/EV battery section 3, part of Hybrid/EV battery module 3	Underbody - Hybrid/EV Battery Pack Section 3	-
B32E	Hybrid/EV Battery Pack Temperature Sensor 5	-	Under the vehicle, in the Hybrid/EV battery section 3, part of Hybrid/EV battery module 3	Underbody - Hybrid/EV Battery Pack Section 3	-
B32F	Hybrid/EV Battery Pack Temperature Sensor 6	-	Under the vehicle, in the Hybrid/EV battery section 3, part of Hybrid/EV battery module 4	Underbody - Hybrid/EV Battery Pack Section 3	-
B32G	Hybrid/EV Battery Pack Temperature Sensor 7	-	Under the vehicle, in the Hybrid/EV battery section 3, part of Hybrid/EV battery module 4	Underbody - Hybrid/EV Battery Pack Section 3	-
B32H	Hybrid/EV Battery Pack Temperature Sensor 8	-	Under the vehicle, in the Hybrid/EV battery section 2, part of Hybrid/EV battery module 5	Underbody - Hybrid/EV Battery Pack Section 2	-
B32J	Hybrid/EV Battery Pack Temperature Sensor 9	-	Under the vehicle, in the Hybrid/EV battery section 2, part of Hybrid/EV battery module 5	Underbody - Hybrid/EV Battery Pack Section 2	-
B32K	Hybrid/EV Battery Pack Temperature Bank 10	-	Under the vehicle, in the Hybrid/EV battery section 2, part of Hybrid/EV battery module 6	Underbody - Hybrid/EV Battery Pack Section 2	-
B32L	Hybrid/EV Battery Pack Temperature Bank 11	-	Under the vehicle, in the Hybrid/EV battery section 2, part of Hybrid/EV battery module 6	Underbody - Hybrid/EV Battery Pack Section 2	-
B32M	Hybrid/EV Battery Pack Temperature Bank 12	-	Under the vehicle, in the Hybrid/EV battery section 1, part of Hybrid/EV battery module 7	Underbody - Hybrid/EV Battery Pack Section 1	-
B32N	Hybrid/EV Battery Pack Temperature Bank 13	-	Under the vehicle, in the Hybrid/EV battery section 1, part of Hybrid/EV battery module 7	Underbody - Hybrid/EV Battery Pack Section 1	-
B32P	Hybrid/EV Battery Pack	-	Under the vehicle, in the Hybrid/EV battery section 1, part of	Underbody - Hybrid/EV	-

	Temperature Bank 14		Hybrid/EV battery module 8	Battery Pack Section 1	
B32Q	Hybrid/EV Battery Pack Temperature Bank 15	-	Under the vehicle, in the Hybrid/EV battery section 1, part of Hybrid/EV battery module 8	Underbody - Hybrid/EV Battery Pack Section 1	-
B32R	Hybrid/EV Battery Pack Temperature Bank 16	-	Under the vehicle, in the Hybrid/EV battery section 1, part of Hybrid/EV battery module 9	Underbody - Hybrid/EV Battery Pack Section 1	-
B34	Engine Coolant Temperature Sensor	-	In the engine compartment, at the left end of the cylinder head, mounted in the coolant tube	Left Rear of Engine Components	B34 Engine Coolant Temperature Sensor
B37	Engine Oil Pressure Switch	-	In the right front of the engine compartment, at the right front of the cylinder head, next to the thermostat housing	Right Front of Engine Components	B37 Engine Oil Pressure Switch
B39	A/C Evaporator Temperature Sensor	-	In the passenger compartment, behind the instrument panel, in the right side of the HVAC module assembly	Instrument Panel - HVAC Components	B39 A/C Evaporator Temperature Sensor
B46	Fuel Level Sensor	-	Under the vehicle, in the fuel tank, part of the fuel pump and level sensor assembly	Underbody - Fuel System Components	-
B47	Fuel Pressure Sensor	-	Under the vehicle, at the right of the fuel tank, in the fuel feed line	Underbody - Fuel System Components	B47 Fuel Pressure Sensor
B52A	Heated Oxygen Sensor 1	-	In the front of the engine compartment, at the top of the catalytic converter	Right Front of Engine Components	B52A Heated Oxygen Sensor 1
B52B	Heated Oxygen Sensor 2	-	In the front of the engine compartment, in the exhaust pipe, downstream of the catalytic converter	Right Front of Engine Components	B52B Heated Oxygen Sensor 2
B55	Bonnet Ajar Switch	-	At the front centre of the vehicle, part of the hood latch	Engine Compartment Components - Front	B55 Bonnet Ajar Switch
B59L	Front Impact Sensor - Left	-	At the front of the vehicle, mounted to the top left of the radiator core support	Engine Compartment Components - Front	B59L Front Impact Sensor - Left
B59R	Front Impact Sensor - Right	-	At the front of the vehicle, mounted to the top right of the radiator core support	Engine Compartment Components - Front	B59R Front Impact Sensor - Right
B60	Passenger Presence Detection Sensor	-	In the passenger compartment, mounted to the bottom of the passenger seat cushion	Passenger Seat Components	-
B63LF	Side Impact Sensor - Left Front	-	In the passenger compartment, in the centre of the left front door	Driver Door Components	B63LF Side Impact Sensor - Left Front
B63LR	Side Impact Sensor - Left Rear	-	In the passenger compartment, in the centre of the left rear door	Left Rear Door Components	B63LR Side Impact Sensor - Left Rear
B63RF	Side Impact Sensor - Right Front	-	In the passenger compartment, in the centre of the right front door	Passenger Door Components	B63RF Side Impact Sensor - Right Front
B63RR	Side Impact Sensor - Right Rear	-	In the passenger compartment, in the centre of the right rear door	Right Rear Door Components	B63RR Side Impact Sensor - Right Rear
B68	Knock Sensor	-	In the engine compartment, at the top rear of the engine block	Left Rear of Engine Components	B68 Knock Sensor

B74	Manifold Absolute Pressure Sensor	-	In the engine compartment, at the top centre of the intake manifold	Left Rear of Engine Components	B74 Manifold Absolute Pressure Sensor
B75B	Mass Air Flow/Intake Air Temperature Sensor	-	In the right of the engine compartment, mounted in the air filter housing outlet tube	Engine Compartment Components - Right	B75B Mass Airflow/Intake Air Temperature Sensor
B78A	Front Object Sensor - Left Outer	UD5	At the front of the vehicle, mounted in the front fascia	Front of Vehicle Components	B78A Front Object Sensor - Left Outer
B78B	Front Object Sensor - Right Outer	UD5	At the front of the vehicle, mounted in the front fascia	Front of Vehicle Components	B78B Front Object Sensor - Right Outer
B78C	Front Object Sensor - Left Middle	UD5	At the front of the vehicle, mounted in the front fascia	Front of Vehicle Components	B78C Front Object Sensor - Left Middle
B78D	Front Object Sensor - Right Middle	UD5	At the front of the vehicle, mounted in the front fascia	Front of Vehicle Components	B78D Front Object Sensor - Right Middle
B78E	Rear Object Sensor - Left Middle	UD5	At the rear of the vehicle, mounted in the rear fascia	Rear of Vehicle Components	B78E Rear Object Sensor - Left Middle
B78F	Rear Object Sensor - Right Middle	UD5	At the rear of the vehicle, mounted in the rear fascia	Rear of Vehicle Components	B78F Rear Object Sensor - Right Middle
B78G	Rear Object Sensor - Left Outer	UD5	At the rear of the vehicle, mounted in the rear fascia	Rear of Vehicle Components	B78G Rear Object Sensor - Left Outer
B78H	Rear Object Sensor - Right Outer	UD5	At the rear of the vehicle, mounted in the rear fascia	Rear of Vehicle Components	B78H Rear Object Sensor - Right Outer
B87	Rearview Camera	UD5	At the rear of the vehicle, between the license plate lamps, in the centre of the fascia	Rear of Vehicle Components	B87 Rear-view Camera
B88D	Seat Belt Switch - Driver	--	In the passenger compartment, part of the driver seat belt buckle	Driver's Seat Components	B88D Seat Belt Switch - Driver
B88LR	Seat Belt Switch - Left Rear	-	In the passenger compartment, part of the left rear seat belt buckle	Rear Seat Components	B88LR Seat Belt Switch - Left Rear
B88P	Seat Belt Switch - Passenger	-	In the passenger compartment, part of the passenger seat belt buckle	Passenger Seat Components	B88P Seat Belt Switch - Passenger
B88RR	Seat Belt Switch - Right Rear	-	In the passenger compartment, part of the right rear seat belt buckle	Rear Seat Components	B88RR Seat Belt Switch - Right Rear
B99	Steering Wheel Angle Sensor	-	In the passenger compartment, at the top of the steering column, behind the steering wheel	Steering Column Components	B99 Steering Wheel Angle Sensor
B107	Accelerator Pedal Position Sensor	--	In the passenger compartment, under the driver side of the instrument panel, part of the accelerator pedal	Instrument Panel Components (2 of 2)	B107 Accelerator Pedal Position Sensor
B118	Windshield Washer Fluid Level Sensor	-	At the left front of the vehicle, behind the left side of the fascia, in the washer solvent bottle	Engine Compartment Components - Front	B118 Windscreen Washer Fluid Level Sensor
			In the passenger compartment, between the front seats,	Passenger Compartment	B119 Multi-Axis Acceleration

B119	Multi-axis Acceleration Sensor	-	under the carpet, to the rear of the inflatable restraint sensing and diagnostic module	Components	Sensor
B135	Coolant Heater Temperature Sensor	-	At the right rear of the engine compartment, mounted to the bulkhead, next to the coolant heater control module	Engine Compartment Components - Right	B135 Coolant Heater Temperature Sensor
B150	Fuel Tank Pressure Sensor	-	Under the vehicle, rear of the fuel tank, mounted on the evaporative emission canister	Underbody - Fuel System Components	B150 Fuel Tank Pressure Sensor
B160	Windscreen Temperature and Inside Moisture Sensor	-	In the passenger compartment, at the top centre of the windscreen	Headliner Components	B160 Windscreen Temperature and Inside Moisture Sensor
B197	Charge Port Door Position Switch	-	At the left front of the vehicle, behind the rear of the left front wing	Left Front of Vehicle Components	B197 Charge Port Door Ajar Switch
B201	Brake Control Brake Pedal Position Sensor	-	In the passenger compartment, under the driver side of the instrument panel, mounted to the brake pedal	Instrument Panel Components (2 of 2)	B201 Brake Control Brake Pedal Position Sensor
B202	Hybrid/EV Electronics Coolant Temperature Sensor	-	At the right front of the engine compartment, mounted in the Hybrid/EV electronics radiator	Engine Compartment Components - Front	B202 Hybrid Electronics Coolant Temperature Sensor
B203	Engine Coolant Radiator Temperature Sensor	-	At the right front of the engine compartment, mounted in the engine radiator	Engine Compartment Components - Front	B203 Engine Coolant Radiator Temperature Sensor
B204A	Hybrid/EV Battery Pack Coolant Temperature Sensor 1	-	Under the vehicle, inside the hybrid/EV battery pack, in the coolant inlet tube	Underbody - Hybrid/EV Battery Pack Assembly Components	B204A Hybrid/EV Battery Pack Coolant Temperature Sensor 1
B204B	Hybrid/EV Battery Pack Coolant Temperature Sensor 2	-	Under the vehicle, inside the hybrid/EV battery pack, in the coolant outlet tube	Underbody - Hybrid/EV Battery Pack Assembly Components	B204B Hybrid/EV Battery Pack Coolant Temperature Sensor 2
B207A	Drive Motor 1 Temperature Sensor	-	In the engine compartment, internal to the transmission assembly	-	B207A Drive Motor 1 Temperature Sensor
B207B	Drive Motor 2 Temperature Sensor	-	In the engine compartment, internal to the transmission assembly	-	B207B Drive Motor 2 Temperature Sensor
B208	Fuel Door Status Switch Assembly	-	At the right rear of the vehicle, behind the right rear quarter panel	--	--
B222	A/C Refrigerant Low-Side Temperature Sensor	-	In the front of the engine compartment, in the refrigerant line near the compressor inlet	Right Front of Engine Components	B222 A/C Refrigerant Low-Side Temperature Sensor
C1	Battery	--	In the luggage compartment, under the storage compartment floor	Luggage Compartment Components	-
C4A	Hybrid/EV Battery Section 1	-	Under the vehicle, in the Hybrid/EV battery pack, forward section	Underbody - Hybrid/EV Battery Pack Internals	• C4A Hybrid/EV Battery Pack Cell Section 1 X1 • C4A Hybrid/EV Battery Pack Cell Section 1 X2 • C4A Hybrid/EV Battery Pack Cell Section 1 X3

C4B	Hybrid/EV Battery Section 2	-	Under the vehicle, in the Hybrid/EV battery pack, middle section	Underbody - Hybrid/EV Battery Pack Internals	• C4B Hybrid/EV Battery Pack Cell Section 2 X1 • C4B Hybrid/EV Battery Pack Cell Section 2 X2
C4C	Hybrid/EV Battery Section 3	-	Under the vehicle, in the Hybrid/EV battery pack, rear section	Underbody - Hybrid/EV Battery Pack Internals	• C4C Hybrid/EV Battery Pack Cell Section 3 X1 • C4C Hybrid/EV Battery Pack Cell Section 3 X2 • C4C Hybrid/EV Battery Pack Cell Section 3 X3 • C4C Hybrid/EV Battery Pack Cell Section 3 X4
C5A	Hybrid/EV Battery Module 1	-	Under the vehicle, in the Hybrid/EV battery pack, part of Hybrid/EV battery section 3	Underbody - Hybrid/EV Battery Pack Section 3	-
C5B	Hybrid/EV Battery Module 2	-	Under the vehicle, in the Hybrid/EV battery pack, part of Hybrid/EV battery section 3	Underbody - Hybrid/EV Battery Pack Section 3	-
C5C	Hybrid/EV Battery Module 3	-	Under the vehicle, in the Hybrid/EV battery pack, part of Hybrid/EV battery section 3	Underbody - Hybrid/EV Battery Pack Section 3	-
C5D	Hybrid/EV Battery Module 4	-	Under the vehicle, in the Hybrid/EV battery pack, part of Hybrid/EV battery section 3	Underbody - Hybrid/EV Battery Pack Section 3	-
C5E	Hybrid/EV Battery Module 5	-	Under the vehicle, in the Hybrid/EV battery pack, part of Hybrid/EV battery section 2	Underbody - Hybrid/EV Battery Pack Section 2	-
C5F	Hybrid/EV Battery Module 6	-	Under the vehicle, in the Hybrid/EV battery pack, part of Hybrid/EV battery section 2	Underbody - Hybrid/EV Battery Pack Section 2	-
C5G	Hybrid/EV Battery Module 7	-	Under the vehicle, in the Hybrid/EV battery pack, part of Hybrid/EV battery section 1	Underbody - Hybrid/EV Battery Pack Section 1	-
C5H	Hybrid/EV Battery Module 8	-	Under the vehicle, in the Hybrid/EV battery pack, part of Hybrid/EV battery section 1	Underbody - Hybrid/EV Battery Pack Section 1	-
C5J	Hybrid/EV Battery Module 9	-	Under the vehicle, in the Hybrid/EV battery pack, part of Hybrid/EV battery section 1	Underbody - Hybrid/EV Battery Pack Section 1	-
E4C	Daytime Running Lamp - Left	-	At the left front of the vehicle, part of the headlamp assembly	Front of Vehicle Components	-
E4D	Daytime Running Lamp - Right	-	At the right front of the vehicle, part of the headlamp assembly	Front of Vehicle Components	--
E4G	Headlamp - Left Dipped beam	-	At the left front of the vehicle, part of the headlamp assembly	--	--
E4H	Headlamp - Right Dipped beam	-	At the right front of the vehicle, part of the headlamp assembly	--	--

E4N	Park/Indicator Lamp - Left	-	At the left front of the vehicle, in the front fascia, below the headlamp assembly	Front of Vehicle Components	E4N Park/Indicator Lamp - Left
E4P	Park/Indicator Lamp - Right	-	At the right front of the vehicle, in the front fascia, below the headlamp assembly	Front of Vehicle Components	E4P Park/Indicator Lamp - Right
E4Y	Indicator Repeater Lamp - Left	-	Outside the vehicle, part of the outside rear-view mirror assembly	• Front of Vehicle Components • Driver Door Components	E4Y Indicator Repeater Lamp - Left
E4Z	Indicator Repeater Lamp - Right	-	Outside the vehicle, part of the outside rear-view mirror assembly	• Front of Vehicle Components • Passenger Door Components	E4Z Indicator Repeater Lamp - Right
E5	Reversing Light	-	At the rear of the vehicle, in the bottom centre of the rear fascia	Rear of Vehicle Components	E5 Reversing Light
E5E	Tail Lamp - Left	-	At the left rear corner of the vehicle, part of the tail lamp assembly	Rear of Vehicle Components	-
E5F	Tail Lamp - Right	-	At the right rear corner of the vehicle, part of the tail lamp assembly	Rear of Vehicle Components	-
E5L	Brake lamp - Left	-	At the left rear corner of the vehicle, part of the tail lamp assembly	--	--
E5R	Brake lamp - Right	-	At the right rear corner of the vehicle, part of the tail lamp assembly	--	--
E6	Centre High Mounted Brake Lamp	-	At the rear of the vehicle, in the centre of the liftgate assembly, above the lower glass	Rear of Vehicle Components	E6 Centre High Mounted Brake Lamp
E7L	Number Plate Lamp - Left	-	At the rear of the vehicle, above the license plate pocket, in the rear fascia	Rear of Vehicle Components	E7L Number Plate Lamp - Left
E7R	Number Plate Lamp - Right	-	At the rear of the vehicle, above the license plate pocket, in the rear fascia	Rear of Vehicle Components	E7R Number Plate Lamp - Right
E13L	Headlamp - Left	--	At the left front corner of the vehicle	Front of Vehicle Components	-
E13R	Headlamp - Right	--	At the right front corner of the vehicle	Front of Vehicle Components	-
E14A	Seat Heating Element - Driver Back	KA1	In the passenger compartment, part of the driver seat back	Driver's Seat Components	E14A Seat Heating Element - Driver Back
E14B	Seat Heating Element - Driver Cushion	KA1	In the passenger compartment, part of the driver seat cushion	Driver's Seat Components	E14B Seat Heating Element - Driver Cushion
E14C	Seat Heating Element - Passenger	KA1	In the passenger compartment, part of the passenger seat	Passenger Seat	E14C Seat Heating Element -

	Back		back	Components	Passenger Back
E14D	Seat Heating Element - Passenger Cushion	KA1	In the passenger compartment, part of the passenger seat cushion	Passenger Seat Components	E14D Seat Heating Element - Passenger Cushion
E18A	Rear Demisting Grid - Upper	-	At the rear of the vehicle, in the liftgate, part of the upper glass	Liftgate Components	• E18A Rear Demister Grid - Upper X1 • E18A Rear Demisting Grid - Upper X2
E18B	Rear Demister Grid - Lower	-	At the rear of the vehicle, in the liftgate, part of the lower glass	Liftgate Components	E18B Rear Demisting Grid - Lower X2
E31L	Sunshade Mirror Lamp - Left	-	In the passenger compartment, at the front left of the headliner, part of the sunshade assembly	Headliner Components	E31L Sunshade Mirror Lamp - Left
E31R	Sunshade Mirror Lamp - Right	-	In the passenger compartment, at the right front of the headliner, part of the sunshade assembly	Headliner Components	E31R Sunshade Mirror Lamp - Right
E32	Cigarette Lighter Receptacle	-	In the passenger compartment, at the top centre of the instrument panel, in the storage compartment	Instrument Panel Components (2 of 2)	E32 Cigarette Lighter Receptacle
E33	Cargo Lamp	-	In the luggage compartment, at the left	Luggage Compartment Components	E33 Cargo Lamp
E36AH	Dome Lamp	-	In the passenger compartment, at the rear centre of the headliner	Headliner Components	E36AH Interior light
E37F	Dome/Reading Lamps - Front	-	In the passenger compartment, at the front centre of the headliner	Headliner Components	E37F Dome/Reading Lamps - Front
E41	Engine Coolant Thermostat Heater	-	In the engine compartment, at the right front of the cylinder head, part of the thermostat housing	Right Front of Engine Components	E41 Engine Coolant Thermostat Heater
E42L	Tail Lamp Assembly - Left	-	At the left rear corner of the vehicle	Rear of Vehicle Components	E42L Tail Lamp Assembly - Left
E42R	Tail Lamp Assembly - Right	-	At the right rear corner of the vehicle	Rear of Vehicle Components	E42R Tail Lamp Assembly - Right
F101	Passenger Instrument Panel Air Bag	-	In the passenger compartment, mounted in the passenger side of the instrument panel	--	--
F103	Power Inverter Module Assembly Cable Cover	-	In the left side of the engine compartment, covering the power inverter module	Engine Compartment Components - Left	F103 Power Inverter Module Assembly Cable Cover
F105L	Roof Rail Air Bag - Left	-	In the passenger compartment, along the left roof rail	Passenger Compartment Components	F105L Roof Rail Air Bag - Left
F105R	Roof Rail Air Bag - Right	-	In the passenger compartment, along the right roof rail	Passenger Compartment Components	F105R Roof Rail Air Bag - Right
F106LF	Side Air Bag - Left Front	-	In the passenger compartment, mounted in the outboard side of the left front seat back	Driver's Seat Components	F106LF Side Air Bag - Left Front

F106RF	Side Air Bag - Right Front	-	In the passenger compartment, mounted in the outboard side of the right front seat back	Passenger Seat Components	F106RF Side Air Bag - Right Front
F107	Steering Wheel Air Bag	-	In the passenger compartment, mounted in the centre of the steering wheel	Steering Column Components	-
F112D	Seat Belt Retractor Pretensioner - Driver	-	In the passenger compartment, at the base of the driver B-pillar	Passenger Compartment Components	F112D Seat Belt Retractor Pretensioner - Driver
F112P	Seat Belt Retractor Pretensioner - Passenger	-	In the passenger compartment, at the base of the passenger B-pillar	Passenger Compartment Components	F112P Seat Belt Retractor Pretensioner - Passenger
F113D	Seat Belt Anchor Pretensioner - Driver	-	In the passenger compartment, under the outboard side of the driver seat cushion	Driver's Seat Components	-
F113P	Seat Belt Anchor Pretensioner - Passenger	-	In the passenger compartment, under the outboard side of the passenger seat cushion	Passenger Seat Components	-
F114D	Knee Air Bag - Driver's	-	In the passenger compartment, at the bottom of the driver side of the instrument panel	Instrument Panel Components (2 of 2)	F114D Knee Air Bag - Driver's
F114P	Knee Air Bag - Passenger	-	In the passenger compartment, at the bottom of the passenger side of the instrument panel	Instrument Panel Components (2 of 2)	F114P Knee Air Bag - Passenger
F115	Hybrid/EV Battery Pack Fuse Cover	-	Under the vehicle, at the front of the Hybrid/EV battery pack	Underbody - Hybrid/EV Battery Pack Assembly Components	-
F116	A/C Compressor Jumper Connector	-	In the engine compartment, part of A/C compressor connector X2	-	F116 A/C Compressor Jumper Connector
F117	14V Power Module Jumper Connector	-	Under the vehicle, rear of the fuel tank, part of 14 V power module X1	-	F117 14V Power Module Jumper Connector
F118	Hybrid/EV Battery Pack Connector Jumper Connector	-	At the rear centre of the engine compartment, part of Hybrid/EV battery pack X3	-	F118 Hybrid/EV Battery Pack Connector Jumper Connector
F119	Cabin Heater Control Module Jumper Connector	-	At the rear centre of the engine compartment, part of cabin heater control module X2	-	F119 Coolant Heater Control Module Jumper Connector
F120	Battery Charger Jumper Connector	-	At the right front of the vehicle, behind the right side of the front fascia, part of battery charger X4	-	F120 Battery Charger Jumper Connector
G1	A/C Compressor	-	In the engine compartment, mounted to the right front of the engine	Right Front of Engine Components	• G1 A/C Compressor X1 • G1 A/C Compressor X2
G10L	Cooling Fan Motor - Left	-	At the front of the engine compartment, rear of the left side of the radiator	Engine Compartment Components - Front	G10L Cooling Fan Motor - Left
G10R	Cooling Fan Motor - Right	-	At the front of the engine compartment, rear of the right side of the radiator	Engine Compartment Components - Front	G10R Cooling Fan Motor - Right
G12	Fuel Pump	-	Under the rear of the vehicle, in the fuel tank, part of the fuel pump and level sensor assembly	Underbody - Fuel System Components	-

G24	Windscreen Washer Pump	--	At the left front of the vehicle, behind the left side of the fascia, in the washer solvent bottle	Engine Compartment Components - Front	G24 Windscreen Washer Pump
G35	Hybrid/EV Electronics Coolant Pump	-	At the left front of the engine compartment, mounted to the left side of the lower radiator support	Engine Compartment Components - Front	G35 Hybrid Electronics Coolant Pump
G36	Auxiliary Heater Coolant Pump	-	At the right of the engine compartment, mounted to the suspension cradle	Engine Compartment Components - Right	G36 Auxiliary Heater Coolant Pump
G37	Hybrid/EV Battery Pack Coolant Pump	-	At the front of the engine compartment, mounted to the centre of the lower radiator support	Engine Compartment Components - Front	G37 Hybrid Battery Pack Coolant Pump
G38	14 V Power Module Cooling Fan	-	In the luggage compartment, under the storage compartment floor, on the 14 V power module	Luggage Compartment Components	G38 14V Power Module Cooling Fan
K1	14 V Power Module	-	In the luggage compartment, under the storage compartment floor	Luggage Compartment Components	• K1 14 V Power Module X1 • K1 14 V Power Module X2 • K1 14 V Power Module X3 • K1 14 V Power Module X4
K8	Blower Motor Control Module	-	In the passenger compartment, under the passenger side of the instrument panel, mounted to the HVAC module assembly	Instrument Panel - HVAC Components	K8 Blower Motor Control Module X1
K9	Body Control Module	-	In the passenger compartment, behind the passenger side of the instrument panel, next to the glove box	Instrument Panel Components (2 of 2)	• K9 Body Control Module X1 • K9 Body Control Module X2 • K9 Body Control Module X3 • K9 Body Control Module X4 • K9 Body Control Module X5 • K9 Body Control Module X6 • K9 Body Control Module X7
K10	Coolant Heater Control Module	-	At the centre rear of the engine compartment, mounted to the bulkhead	Engine Compartment Components - Right	• K10 Coolant Heater Control Module X1 • K10 Coolant Heater Control Module X2
K17	Electronic Brake Control Module	-	At the left rear of the engine compartment, part of the master cylinder assembly	Engine Compartment Components - Left	K17 Electronic Brake Control Module
					• K20 Engine Control

K20	Engine Control Module	-	At the left front corner of the vehicle, behind the left side of the front fascia	Engine Compartment Components - Front	Module X1 • K20 Engine Control Module X2 • K20 Engine Control Module X3
K27	Fuel Pump Control Module	-	In the right rear of the luggage compartment, behind the trim panel	Luggage Compartment Components	K27 Fuel Pump Control Module
K29	Seat Heating Control Module	KA1	In the passenger compartment, under the driver seat	Driver's Seat Components	• K29 Seat Heating Control Module X1 • K29 Seat Heating Control Module X2 • K29 Seat Heating Control Module X3
K33	HVAC Control Module	-	In the passenger compartment, behind the centre of the instrument panel, above the radio	Instrument Panel Components (2 of 2)	• K33 HVAC Control Module X1 • K33 HVAC Control Module X2 • K33 HVAC Control Module X3
K35	Ignition Coil Module	-	In the engine compartment, on the top of the cylinder head, between the camshafts	Left Rear of Engine Components	K35 Ignition Coil Module
K36	Inflatable Restraint Sensing and Diagnostic Module	-	In the passenger compartment, between the front seats, under the carpet	Passenger Compartment Components	• K36 Inflatable Restraint Sensing and Diagnostic Module X1 • K36 Inflatable Restraint Sensing and Diagnostic Module X2
K41	Front and Rear Parking Assist Control Module	UD5	In the left rear corner of the luggage compartment, behind the trim panel	Luggage Compartment Components	• K41 Parking Assist Control Module X1 • K41 Parking Assist Control Module X2 • K41 Parking Assist Control Module X3
K43	Power Steering Control Module	-	Under the vehicle, at the rear of the engine cradle, part of the steering gear assembly	Underbody - Steering Components	• K43 Power Steering Control Module X1 • K43 Power Steering Control Module X2
					K65 Tyre Pressure Indicator

K65	Tire Pressure Indicator Module	-	In the luggage compartment	-	Module
K71	Transmission Control Module	-	In the left of the engine compartment, internal to the transmission assembly, part of the control solenoid valve assembly	--	--
K73	Telematics Communication Interface Control Module	-	In the passenger compartment, behind the passenger side of the instrument panel, next to the body control module	Instrument Panel Components (2 of 2)	• K73 Telematics Communication Interface Module X1 • K73 Telematics Communication Interface Module X2
K77	Remote Control Door Lock Receiver	-	In the passenger compartment, at the top centre of the windscreen	Headliner Components	K77 Remote Control Door Lock Receiver
K83	Handbrake Control Module	-	At the left rear corner of the vehicle, behind the left side of the rear fascia	-	K83 Parking Brake Control Module
K84	Keyless Entry Control Module	-	In the right side of the luggage compartment, behind the trim panel	Luggage Compartment Components	• K84 Keyless Entry Control Module X1 • K84 Keyless Entry Control Module X2
K85	Passenger Presence Detection Module	-	In the passenger compartment, under the passenger seat	Passenger Seat Components	K85 Passenger Presence Detection Module
K89	Immobiliser Control Module	-	In the passenger compartment, behind the centre of the instrument panel, above the HVAC control module	Instrument Panel Components (2 of 2)	K89 Immobiliser Control Module
K112A	Hybrid/EV Battery Interface Control Module 1	-	Under the vehicle, internal to the Hybrid/EV battery pack, on the top of section 1	Underbody - Hybrid/EV Battery Pack Internals	• K112A Hybrid/EV Battery Interface Control Module 1 X1 • K112A Hybrid/EV Battery Interface Control Module 1 X2 • K112A Hybrid/EV Battery Interface Control Module 1 X3 • K112A Hybrid/EV Battery Interface Control Module 1 X4
					• K112B Hybrid/EV Battery Interface Control Module 2 X1 • K112B Hybrid/EV Battery

K112B	Hybrid/EV Battery Interface Control Module 2	-	Under the vehicle, internal to the Hybrid/EV battery pack, on the top of section 2	Underbody - Hybrid/EV Battery Pack Internals	Interface Control Module 2 X2 • K112B Hybrid/EV Battery Interface Control Module 2 X3
K112C	Hybrid/EV Battery Interface Control Module 3	-	Under the vehicle, internal to the Hybrid/EV battery pack, on the top of section 3	Underbody - Hybrid/EV Battery Pack Internals	• K112C Hybrid/EV Battery Interface Control Module 3 X1 • K112C Hybrid/EV Battery Interface Control Module 3 X2 • K112C Hybrid/EV Battery Interface Control Module 3 X4
K112D	Hybrid/EV Battery Interface Control Module 4	-	Under the vehicle, internal to the Hybrid/EV battery pack, on the top of section 3	Underbody - Hybrid/EV Battery Pack Internals	• K112D Hybrid/EV Battery Interface Control Module 4 X1 • K112D Hybrid/EV Battery Interface Control Module 4 X2 • K112D Hybrid/EV Battery Interface Control Module 4 X3
K114A	Hybrid/EV Powertrain Control Module 1	-	In the left side of the engine compartment, part of the power inverter module assembly	--	--
K114B	Hybrid/EV Powertrain Control Module 2	-	In the passenger compartment, under the passenger seat	-	• K114B Hybrid Powertrain Control Module 2 X1 • K114B Hybrid Powertrain Control Module 2 X2
M6	Air Temperature Door Actuator	-	In the passenger compartment, under the driver's side of the instrument panel, mounted to the HVAC module assembly	Instrument Panel - HVAC Components	M6 Air Temperature Door Actuator
M8	Blower Motor	-	In the passenger compartment, under the passenger side of the instrument panel, mounted to the HVAC module assembly	Instrument Panel - HVAC Components	-
M15A	Drive Motor 1	-	In the engine compartment, internal to the automatic transmission	-	M15A Drive Motor 1 X1
M15B	Drive Motor 2	-	In the engine compartment, internal to the automatic transmission	-	• M15B Drive Motor 2 X1 • M15B Drive Motor 2 X2

M28L	Full Beam Solenoid Actuator - Left	-	At the left front corner of the vehicle, part of the headlamp assembly	--	--
M28R	Full Beam Solenoid Actuator - Right	-	At the right front corner of the vehicle, part of the headlamp assembly	--	--
M37	Mode Door Actuator	-	In the passenger compartment, under the driver's side of the instrument panel, mounted to the HVAC module assembly	Instrument Panel - HVAC Components	M37 Mode Door Actuator
M46	Air Recirculation Door Motor	-	In the passenger compartment, under the passenger side of the instrument panel, mounted to the HVAC module assembly, above the blower motor	Instrument Panel - HVAC Components	M46 Air Recirculation Door Motor
M74D	Window Motor - Driver	-	In the passenger compartment, behind the driver's door panel	Driver Door Components	M74D Window Motor - Driver
M74LR	Window Motor - Left Rear	-	In the passenger compartment, behind the left rear door panel	Left Rear Door Components	M74LR Window Motor - Left Rear
M74P	Window Motor - Passenger	-	In the passenger compartment, behind the passenger door panel	Passenger Door Components	M74P Window Motor - Passenger
M74RR	Window Motor - Right Rear	-	In the passenger compartment, behind the right rear door panel	Right Rear Door Components	M74RR Window Motor - Right Rear
M75	Windscreen Wiper Motor	--	At the rear of the engine compartment, below the centre on the windscreen	Engine Compartment Components - Left	M75 Windscreen Wiper Motor
M77D	Outside Rear-view Mirror Motor - Driver	-	At the front of the driver's door, part of the outside rear-view mirror	-	M77D Outside Rear-view Mirror Motor - Driver
M77P	Outside Rear-view Mirror Motor - Passenger	-	At the front of the passenger door, part of the outside rear-view mirror	-	M77P Outside Rear-view Mirror Motor - Passenger
M80	Charge Port Door Actuator	-	At the left front of the vehicle, behind the rear of the wing	Left Front of Vehicle Components	M80 Charge Port Door Unlatch Actuator
M97	Fuel Door Lock Actuator	-	At the right rear of the vehicle, behind the right rear quarter panel	Right Rear of Vehicle - Fuel Door Components	M27 Fuel Door Unlatch Actuator
P12L	Horn - Left	-	At the left front corner of the vehicle, behind the left side of the fascia	Engine Compartment Components - Front	P12L Horn - Left
P12R	Horn - Right	-	At the right front corner of the vehicle, behind the right side of the fascia	Engine Compartment Components - Front	P12R Horn - Right
P14	Passenger Air Bag Disable Indicator	-	In the passenger compartment, at the front of the headliner, in the overhead console	Headliner Components	P14 Passenger Air bag Disable Indicator
P16	Instrument Cluster	-	In the passenger compartment, at the top of the driver side of the instrument panel, above the steering column	Instrument Panel Components (1 of 2)	P16 Instrument Cluster
P17	Info Display Module	-	In the passenger compartment, at the top centre of the instrument panel, above the radio/HVAC control	Instrument Panel Components (1 of 2)	P17 Info Display Module X1

P19AC	Speaker - Subwoofer	-	In the luggage compartment, under the storage compartment floor	Luggage Compartment Components	P19AC Speaker - Subwoofer
P19AG	Speaker - Left Front Door	-	In the passenger compartment, behind the left front door panel	Driver Door Components	P19AG Speaker - Left Front Door
P19AH	Speaker - Right Front Door	-	In the passenger compartment, behind the right front door panel	Passenger Door Components	P19AH Speaker - Right Front Door
P19AL	Speaker - Left Rear Door	-	In the passenger compartment, behind the left rear door panel	Left Rear Door Components	P19AL Speaker - Left Rear Door
P19AM	Speaker - Right Rear Door	-	In the passenger compartment, behind the right rear door panel	Right Rear Door Components	P19AM Speaker - Right Rear Door
P19H	Speaker - Left Front Tweeter	-	In the passenger compartment, at the base of the left A-pillar moulding	Instrument Panel Components (1 of 2)	P19H Speaker - Left Front Tweeter
P19V	Speaker - Right Front Tweeter	-	In the passenger compartment, at the base of the right A-pillar moulding	Instrument Panel Components (1 of 2)	P19V Speaker - Right Front Tweeter
P36	Battery State of Charge Indicator	-	In the passenger compartment, at the top centre of the instrument panel, above the radio/HVAC control	Instrument Panel Components (1 of 2)	P36 Battery State of Charge Indicator
Q6E	Camshaft Position Actuator Solenoid Valve – Exhaust	-	At the right front of the engine, in the top right front of the cylinder head	Right Front of Engine Components	Q6E Camshaft Position Actuator Solenoid Valve - Exhaust
Q6F	Camshaft Position Actuator Solenoid Valve – Inlet	-	At the right rear of the engine, in the top right rear of the cylinder head	Right Front of Engine Components	Q6F Camshaft Position Actuator Solenoid Valve - Intake
Q8	Control Solenoid Valve Assembly	-	In the engine compartment, internal to the transmission	Transmission Components	• Q8 Control Solenoid Valve Assembly X1 • Q8 Control Solenoid Valve Assembly X2 • Q8 Control Solenoid Valve Assembly X3 • Q8 Control Solenoid Valve Assembly X4
Q12	Evaporative Emission Purge Solenoid Valve	-	In the engine compartment, at the top rear centre of the intake manifold	Left Rear of Engine Components	Q12 Evaporative Emissions Purge Solenoid Valve
Q13	Evaporative Emission Vent Solenoid Valve	-	Under the vehicle, rear of the fuel tank, near the evaporative emission canister	Underbody - Fuel System Components	Q13 Evaporative Emission Vent Solenoid Valve
Q17A	Fuel Injector 1	-	In the engine compartment, at the top rear of the engine, above cylinder 1 intake port	Left Rear of Engine Components	Q17A Fuel Injector 1
Q17B	Fuel Injector 2	-	In the engine compartment, at the top rear of the engine, above cylinder 2 intake port	Left Rear of Engine Components	Q17B Fuel Injector 2

Q17C	Fuel Injector 3	-	In the engine compartment, at the top rear of the engine, above cylinder 3 intake port	Left Rear of Engine Components	Q17C Fuel Injector 3
Q17D	Fuel Injector 4	-	In the engine compartment, at the top rear of the engine, above cylinder 4 intake port	Left Rear of Engine Components	Q17D Fuel Injector 4
Q38	Throttle Body	-	In the engine compartment, at the right rear of the engine at the inlet for the intake manifold	Right Front of Engine Components	Q38 Throttle Body
Q63	Evaporative Emission System Leak Detection Pump Assembly	-	Under the vehicle, to the rear of the fuel tank	Underbody - Fuel System Components	Q63 Evaporative Emission System Leak Detection Pump Assembly
Q65	Hybrid/EV Battery Pack Coolant Control Valve	-	In the rear of the engine compartment, near the right strut tower, mounted to the bulkhead	Engine Compartment Components - Right	Q65 Hybrid/EV Battery Pack Coolant Control Valve
Q66	Passenger Compartment Heater Coolant Control Valve	-	In the rear middle of the engine compartment, mounted to the bulkhead	Engine Compartment Components - Left	Q66 Passenger Compartment Heater Coolant Control Valve
S3	Transmission Shift Lever	-	In the passenger compartment, at the front of the centre console	Instrument Panel Components (1 of 2)	S3 Transmission Shift Lever
S15	Hybrid/EV Battery Pack High Voltage Manual Service Disconnect Lever	-	Under the vehicle at the top of the Hybrid/EV battery, accessed by removing the storage compartment in the rear of the centre console	Underbody - Hybrid/EV Battery Pack Assembly Components	• S15 Hybrid Battery Pack High-Voltage Manual Disconnect Lever X1 • S15 Hybrid/EV Battery Pack High Voltage Manual Disconnect Lever X2
S16	Driver Information Centre Switch	-	In the passenger compartment, on the front of the instrument panel, below the outboard driver vent	Instrument Panel Components (1 of 2)	S16 Driver Information Centre Switch
S25	Garage Door Opener	-	In the passenger compartment, at the front centre of the headliner, in the overhead console	Headliner Components	S25 Garage Door Opener
S33	Horn Switch	-	In the passenger compartment, in the centre of the steering wheel, behind the driver side air bag	Steering Column Components	-
S46	Liftgate Handle Switch	-	At the rear of the vehicle, in the lower centre of the tailgate	Liftgate Components	S46 Tailgate Handle Switch
S48B	Multi-function Switch - Overhead Console	-	In the passenger compartment, at the front centre of the headliner	Headliner Components	S48B Multi-function Switch - Overhead Console
S51	Telematics Button Assembly	-	In the passenger compartment, at the front centre of the headliner, in the overhead console	Headliner Components	S51 Telematics Button Assembly
S52	Outside Rearview Mirror Switch	-	In the passenger compartment, at the front of the driver's door panel	Driver Door Components	S52 Outside Rear-view Mirror Switch
S70L	Steering Wheel Controls Switch - Left	-	In the passenger compartment, on the left side of the steering wheel	Instrument Panel Components (1 of 2)	S70L Steering Wheel Controls Switch - Left
S70R	Steering Wheel Controls Switch -	-	In the passenger compartment, on the right side of the	Instrument Panel	S70R Steering Wheel Controls

	Right		steering wheel	Components (1 of 2)	Switch - Right
S78	Turn Signal/Multifunction Switch	-	In the passenger compartment, on the left side of the steering column	Instrument Panel Components (1 of 2)	S78 Indicator/Multifunction Switch
S79D	Window Switch - Driver	-	In the passenger compartment, at the centre of the driver's door panel	Driver Door Components	S79D Window Switch - Driver
S79LR	Window Switch - Left Rear	-	In the passenger compartment, at the centre of the left rear door panel	Left Rear Door Components	S79LR Window Switch - Left Rear
S79P	Window Switch - Passenger	-	In the passenger compartment, at the centre of the passenger door panel	Passenger Door Components	S79P Window Switch - Passenger
S79RR	Window Switch - Right Rear	-	In the passenger compartment at the centre of the right rear door panel	Right Rear Door Components	S79RR Window Switch - Right Rear
S82	Windscreen Wiper/Washer Switch	-	In the passenger compartment, on the right side of the steering column	Instrument Panel Components (1 of 2)	S82 Windscreen Wiper/Washer Switch
S83	Vehicle On/Off Switch	-	In the passenger compartment, on the lower left of the radio/HVAC control	Instrument Panel Components (1 of 2)	S83 Vehicle On/Off Switch
S91	Park Brake Control Switch	-	In the passenger compartment, at the right side of the radio/HVAC control, next to the shifter	Instrument Panel Components (1 of 2)	S91 Park Brake Switch
S109	Sport Mode Switch	-	In the passenger compartment, on the centre of the instrument panel	Instrument Panel Components (1 of 2)	S109 Sport Mode Switch
S113	Charge Port Door Open Request Switch	-	In the passenger compartment, on the driver's door panel, above the storage compartment	Driver Door Components	S113 Charge Port Door Open Request Switch
S117	Refuel Request Switch	-	In the passenger compartment, on the driver's door panel, above the storage compartment	Driver Door Components	S117 Refuel Request Switch
T3	Audio Amplifier	-	In the luggage compartment, under the storage compartment floor	Luggage Compartment Components	• T3 Audio Amplifier X1 • T3 Audio Amplifier X2 • T3 Audio Amplifier X3
T4G	Mobile Phone, Navigation, and Digital Radio Aerial	-	Outside the vehicle, at the rear centre of the roof	Passenger Compartment Components	-
T6	Power Inverter Module	-	In the engine compartment, to the left of the engine, under the power inverter module assembly cable cover	Engine Compartment Components - Left	• T6 Power Inverter Module X1 • T6 Power Inverter Module X2 • T6 Power Inverter Module X3 • T6 Power Inverter Module X4 • T6 Power Inverter Module

					X5 • T6 Power Inverter Module X6 • T6 Power Inverter Module X7 • T6 Power Inverter Module X8
T10	Keyless Entry Aerial	-	in the passenger compartment, behind the lower centre of the instrument panel	Instrument Panel Components (2 of 2)	T10 Keyless Entry Aerial
T10E	Keyless Entry Aerial - Rear Compartment	-	In the passenger compartment, between the rear seats, under the centre console - rear	Center Console Components	T10E Keyless Entry Antenna - Rear Compartment
T10K	Keyless Entry Aerial - Centre Console Rear	-	In the passenger compartment, under the rear of the centre console	Center Console Components	T10K Keyless Entry Aerial - Centre Console Rear
T15	Navigation Aerial Signal Splitter	-	In the passenger compartment, behind the glove box, mounted to the telematics communication interface control module bracket	Instrument Panel Components (2 of 2)	-
T18	Battery Charger	-	At the right front of the vehicle, behind the right side of the front fascia	Engine Compartment Components - Front	• T18 Battery Charger X1 • T18 Battery Charger X2 • T18 Battery Charger X3 • T18 Battery Charger X4
X50A	Fuse Block - Underbonnet	-	In the left side of the engine compartment, next to the power inverter module assembly	Engine Compartment Components - Left	Electrical Centre Identification Views
X50B	Fuse Block - Underbonnet Auxiliary	-	In the left rear of the engine compartment, to the rear of the fuse block - underbonnet	Engine Compartment Components - Left	Electrical Centre Identification Views
X50D	Fuse Block - Battery	-	In the luggage compartment, under the storage compartment floor, attached to the positive battery post	Luggage Compartment Components	Electrical Centre Identification Views
X51L	Fuse Block - Instrument Panel Left	-	In the passenger compartment, behind the left side instrument panel closeout	Instrument Panel Harness Routing	Electrical Centre Identification Views
X51R	Fuse Block - Instrument Panel Right	-	In the passenger compartment, behind the right side instrument panel closeout	Instrument Panel Harness Routing	Electrical Centre Identification Views
X53A	Fuse Block - Rear Body	-	In the luggage compartment, behind the left trim panel	Luggage Compartment Components	Electrical Centre Identification Views
X80H	Accessory Power Receptacle - Centre Console	-	In the passenger compartment, in the centre console storage compartment	Center Console Components	X80H Accessory Power Receptacle - Centre Console
X80L	Accessory Power Receptacle - Rear Console	-	In the passenger compartment, at the rear of the centre console	Center Console Components	X80L Accessory Power Receptacle - Rear Console
X83	Auxiliary Audio Input	--	In the passenger compartment, in the centre console storage	Center Console	X83 Auxiliary Audio Input

			compartment	Components	
X84	Data Link Connector	--	In the passenger compartment, at the bottom of the driver side of the instrument panel	Instrument Panel Harness Routing	X84 Data Link Connector
X84B	Auxiliary Data Connector	-	In the passenger compartment, at the bottom of the passenger side of the instrument panel	Instrument Panel Harness Routing	X84B Auxiliary Data Connector
X85	Steering Wheel Air Bag Coil	-	In the passenger compartment, behind the steering wheel	Steering Column Components	• X85 Steering Wheel Air Bag Coil X1 • X85 Steering Wheel Air Bag Coil X3 • X85 Steering Wheel Air Bag Coil X2
X92	USB Receptacle	-	In the passenger compartment, in the centre console storage compartment, part of the auxiliary audio input	Center Console Components	-
X98	Hybrid/EV Battery Charger Receptacle	-	At the left front of the vehicle, behind the charging port door	Left Front of Vehicle Components	X98 Hybrid/EV Battery Charger Receptacle
X100	Forward Lamp Harness to Front Fascia Harness (16 cavities)	UD5	At the left front corner of the vehicle, behind the left side of the front fascia	-	X100 Forward Lamp Harness to Front Fascia Harness (with UD5)
X101	Font Fascia Harness to Forward Lamp Harness (6 cavities)	without UD5	At the left front corner of the vehicle, behind the left side of the front fascia	-	X101 Front Fascia Harness to Forward Lamp Harness (without UD5)
X102	Engine Harness to Cooling Fan Harness (8 cavities)	-	In the engine compartment, at the lower left of the cooling fan housing	-	X102 Engine Harness to Cooling Fan Harness
X103	Forward Lamp Harness to Cooling Fan Harness (14 cavities)	-	In the engine compartment, at the upper right of the cooling fan housing	-	X103 Forward Lamp Harness to Cooling Fan Harness
X104	Cooling Fans to Cooling Fan Harness (2 cavities)	-	In the engine compartment, at the lower left of the cooling fan housing	-	X104 Cooling Fans to Cooling Fan Harness
X105	Forward Lamp Harness to Body Harness (40 cavities)	-	In the right rear of the engine compartment, at the top of the strut tower	-	X105 Forward Lamp Harness to Body Harness
X107	Forward Lamp Harness to Body Harness (40 cavities)	-	In the right rear of the engine compartment, at the top of the strut tower	-	X107 Forward Lamp Harness to Body Harness
X110	Forward Lamp Harness to Left Headlamp Assembly (8 cavities)	-	In the engine compartment, at the rear of the left headlamp assembly	-	X110 Forward Lamp Harness to Left Headlamp Assembly
X120	Forward Lamp Harness to Right Headlamp Assembly (8 cavities)	-	In the engine compartment, at the rear of the right headlamp assembly	-	X120 Forward Lamp Harness to Right Headlamp Assembly
X175	Engine Harness to Transmission Harness (20 cavities)	-	In the engine compartment, on the top of the transmission assembly	-	X175 Engine Harness to Transmission Harness

X180	Forward Lamp Harness to Auxiliary Heater Coolant Pump Harness (6 cavities)	-	In the engine compartment, at the right side of the engine cradle	-	X180 Forward Lamp Harness to Auxiliary Heater Coolant Pump Harness
X190	Engine Harness to Body Harness (40 cavities)	-	In the left front of the engine compartment, below the engine control module	-	X190 Engine Harness to Body Harness
X225	Instrument Panel Harness to Body Harness (102 cavities)	-	In the passenger compartment, at the base of the left A-pillar, behind the kick panel	Instrument Panel Harness Routing	X225 Instrument Panel Harness to Body Harness
X250	Instrument Panel Top Pad Harness to Instrument Panel Harness (10 cavities)	-	In the passenger compartment, behind the right side of the instrument panel, above the glove box	Instrument Panel Harness Routing	X250 Instrument Panel Top Pad Harness to Instrument Panel Harness
X252	Instrument Panel Harness to HVAC Harness (2 cavities)	-	In the passenger compartment, behind the right side of the instrument panel	Instrument Panel Harness Routing	X252 Instrument Panel Harness to HVAC Harness
X255	Instrument Panel Harness to Passenger Air Bag Harness (5 cavities)	-	In the passenger compartment, behind the right side of the instrument panel, above the glove box	-	X255 Instrument Panel Harness to Passenger Air Bag Harness
X275	Instrument Panel Harness to Body Harness (102 cavities)	-	In the passenger compartment, at the base of the right A-pillar, behind the kick panel	Instrument Panel Harness Routing	X275 Instrument Panel Harness to Body Harness
X310	Headliner Harness to Instrument Panel Harness (22 cavities)	-	In the passenger compartment, at the base of the right side A-pillar trim	Instrument Panel Harness Routing	X310 Headliner Harness to Instrument Panel Harness
X311	Headliner Harness to Instrument Panel Harness (16 cavities)	-	In the passenger compartment, at the base of the right side A-pillar trim	Instrument Panel Harness Routing	X311 Headliner Harness to Instrument Panel Harness
X315	Console Harness to Instrument Panel Harness (12 cavities)	-	In the passenger compartment, under the front of the centre console	Center Console Harness Routing	X315 Console Harness to Instrument Panel Harness
X316	I/P Harness to Centre Console Harness (USB)	-	In the passenger compartment, under the front of the centre console	--	--
X320	Body Harness to Driver Seat Harness (20 cavities)	-	In the passenger compartment, under the driver seat	-	X320 Body Harness to Driver Seat Harness
X322	Side Air Bag Jumper to Driver Seat Harness (4 cavities)	-	In the passenger compartment, under the driver seat	-	X322 Side Air Bag Jumper to Driver Seat Harness
X325	Body Harness to Passenger Seat Harness (20 cavities)	-	In the passenger compartment, under the passenger seat	-	X325 Body Harness to Passenger Seat Harness
X327	Side Air Bag Jumper to the Passenger Seat Harness (4 cavities)	-	In the passenger compartment, under the passenger seat	-	X327 Side Air Bag Jumper to Passenger Seat Harness
X345	Driver Seat Back Heater Jumper to Driver Seat Cushion Harness (2 cavities)	KA1	In the passenger compartment, under the driver seat	-	X345 Driver Seat Back Heater to Driver Seat Harness (KA1)
	Passenger Seat Back Heater				X346 Passenger Seat Back

X346	Jumper to Passenger Seat Cushion Harness (2 cavities)	KA1	In the passenger compartment, under the passenger seat	-	Heater to Passenger Seat Harness (KA1)
X350	Body Harness to Evap Harness (14 cavities)	-	Under the vehicle, to the rear of the fuel tank	Underbody Harness Routing	X350 Body Harness to EVAP Harness
X351	Body Harness to Evap Harness (12 cavities)	-	Under the vehicle, to the rear of the fuel tank	Underbody Harness Routing	X351 Body Harness to EVAP Harness
X354	Evap Harness to Fuel Pump Harness (4 cavities)	-	Under the vehicle, to the rear of the fuel tank	Underbody Harness Routing	X354 EVAP Harness to Fuel Pump Harness
X355	Evap Harness to Fuel Pressure Harness (6 cavities)	-	Under the vehicle, to the rear of the fuel tank	Underbody Harness Routing	X355 EVAP Harness to Fuel Pressure Harness
X450	Body Harness to Rear Fascia Harness (16 cavities)	UD5	At the rear of the vehicle, behind the left side of the rear fascia	Rear of Vehicle Harness Routing	X450 Body Harness to Rear Fascia Harness (with UD5)
X451	Body Harness to Rear Fascia Harness (4 cavities)	without UD5	At the rear of the vehicle, behind the left side of the rear fascia	Rear of Vehicle Harness Routing	X451 Body Harness to Rear Fascia Harness (without UD5)
X500	Driver Door Harness to Body Harness (41 cavities)	-	In the passenger compartment, behind the left front kick panel	Driver Door Harness Routing	X500 Driver Door Harness to Body Harness
X505	Driver Door Harness to Driver Door Trim Harness (22 cavities)	-	In the passenger compartment, behind the driver's door panel	Driver Door Harness Routing	X505 Driver Door Harness to Driver Door Trim Harness
X510	Outside Rear-view Mirror - Driver to Driver Door Harness (8 cavities)	-	In the passenger compartment, behind the driver's door panel	Driver Door Harness Routing	X510 Driver Door Harness to Outside Rear-view Mirror - Driver
X600	Passenger Door Harness to Body Harness (41 cavities)	-	In the passenger compartment, behind the left front kick panel	Passenger Door Harness Routing	X600 Passenger Door Harness to Body Harness
X610	Outside Rear-view Mirror - Passenger to Passenger Door Harness (8 cavities)	-	In the passenger compartment, behind the passenger door panel	Passenger Door Harness Routing	X610 Passenger Door Harness to Outside Rear-view Mirror - Passenger
X700	Left Rear Door Harness to Body Harness (20 cavities)	-	In the passenger compartment, behind the B-pillar lower trim	Left Rear Door Harness Routing	X700 Left Rear Door Harness to Body Harness
X800	Right Rear Door Harness to Body Harness (20 cavities)	-	In the passenger compartment, behind the B-pillar lower trim	Right Rear Door Harness Routing	X800 Right Rear Door Harness to Body Harness
X900	Liftgate Jumper Harness to Body Harness (8 cavities)	-	In the passenger compartment, above the rear of the headliner	Liftgate Harness Routing	X900 Liftgate Jumper Harness to Body Harness
X901	Liftgate Jumper Harness to Body Harness (2 cavities)	-	In the passenger compartment, above the rear of the headliner	Liftgate Harness Routing	X901 Liftgate Jumper Harness to Body Harness
X905	Liftgate Jumper Harness to Liftgate Harness (8 cavities)	-	In the liftgate, behind the trim between the mounting hinges	Liftgate Harness Routing	X905 Liftgate Jumper Harness to Liftgate Harness
X906	Liftgate Jumper Harness to Liftgate Harness (2 cavities)	-	In the liftgate, behind the trim between the mounting hinges	Liftgate Harness Routing	-

G101	Forward Lamp Harness	--	In the engine compartment, on the front of the left frame rail, forward of G103	G101, G103, G109, and G117	-
G102	Forward Lamp Harness	--	In the engine compartment, on the front of the right frame rail, forward of G104	G102, G104, and G105	-
G103	Forward Lamp Harness	--	In the engine compartment, on the front of the left frame rail, rear of G101	G101, G103, G109, and G117	-
G104	Forward Lamp Harness	--	In the engine compartment, on the front of the right frame rail, rear of G102	G102, G104, and G105	-
G105	Cooling Fan Jumper Harness	-	In the engine compartment, on the front of the right frame rail, below the right front headlamp assembly	G102, G104, and G105	-
G106	Engine Harness	--	In the engine compartment, at the left rear of the cylinder head	G106 and G113	-
G109	Engine Harness	--	In the engine compartment, at the side of the left strut tower	G101, G103, G109, and G117	-
G113	Engine Harness	--	In the engine compartment, on the rear of the transmission assembly	G106 and G113	-
G117	Body Harness	-	In the engine compartment, at the front of the left strut tower	G101, G103, G109, and G117	-
G201	Instrument Panel Harness	-	In the passenger compartment, behind the instrument panel, above the brake pedal, on the instrument panel support	G201, G202, G203, and G204	-
G202	Instrument Panel Harness	--	In the passenger compartment, behind the right side of the instrument panel, above the glove box, on the instrument panel support	G201, G202, G203, and G204	-
G203	Instrument Panel Harness	--	In the passenger compartment, behind the left side of the instrument panel, earth strap from body to instrument panel support	G201, G202, G203, and G204	--
G204	Instrument Panel Harness	--	In the passenger compartment, behind the centre of the instrument panel, on the instrument panel support	G201, G202, G203, and G204	-
G205	Instrument Panel Harness	-	In the passenger compartment, behind the left side of the instrument panel, earth strap from body to instrument panel support	G205 and G304	--
G301	Body Harness	-	In the passenger compartment, under the left front door sill trim	G301	--
G302	Body Harness	-	In the passenger compartment, under the right front door sill trim	G302	-
G304	Instrument Panel Harness	-	In the passenger compartment, under the center console, to the rear of the shifter	G205 and G304	-

G402	Body Harness	--	In the luggage compartment, below the storage compartment floor, attached to the negative battery post	G402 and G403	-
G403	Body Harness	-	In the luggage compartment, behind the left trim panel below the fuse block - rear	G402 and G403	-
G405	Body Harness	-	In the luggage compartment, behind the right trim panel	G405 and G406	-
G406	Body Harness	-	In the luggage compartment, behind the right trim panel	G405 and G406	-
J100	Front Fascia Harness	-	In the front fascia harness approximately 13.6 cm (5.35 in) from the X100 and X101 breakout	--	--
J101	Front Fascia Harness	-	In the front fascia harness approximately 21 cm (8.26 in) from the X100 and X101 breakout	--	--
J102	Front Fascia Harness	-	In the front fascia harness approximately 11 cm (4.33 in) from the front object sensor - left middle connector breakout	--	--
J105	Forward Lamp Harness	--	In the forward lamp harness approximately 32 cm (12.59 in) from the windscreen wiper motor breakout	--	--
J106	Forward Lamp Harness	--	In the forward lamp harness approximately 5 cm (1.96 in) in to the horn - right breakout	--	--
J107	Forward Lamp Harness	--	In the forward lamp harness approximately 14 cm (5.51 in) from the X105 and X107 breakout	--	--
J108	Forward Lamp Harness	--	In the forward lamp harness approximately 18.5 cm (7.28 in) from the X105 and X107 breakout	--	--
J110	Cooling Fan Jumper Harness	-	In the cooling fan jumper harness approximately 4.5 cm (1.77 in) from the X103 breakout	--	-
J125	Engine Harness	--	In the engine harness approximately 5 cm (1.96 in) from the engine coolant temperature sensor breakout	--	--
J126	Engine Harness	--	In the engine harness approximately 5 cm (1.96 in) from the power steering control module breakout	--	--
J128	Engine Harness	--	In the engine harness approximately 5 cm (1.96 in) from the power inverter module assembly cover connector breakout	--	--
J129	Engine Harness	--	In the engine harness approximately 5 cm (1.96 in) in to the power inverter module assembly connector breakout	--	--
J130	Engine Harness	--	In the engine harness on the power inverter module breakout approximately 28.5 cm (11.22 in) from power inverter module assembly X3	--	—
J201	Instrument Panel Harness	--	In the instrument panel harness approximately 8.4 cm (3.30 in) from fuse block - instrument panel left	Instrument Panel Harness Routing	—
J202	Instrument Panel Harness	--	In the instrument panel harness approximately 2.5 cm (0.98 in) from fuse block - instrument panel left	Instrument Panel Harness Routing	--

J203	Instrument Panel Harness	--	In the instrument panel harness approximately 5.2 cm (2.04 in) from the brake control brake pedal position sensor connector breakout	Instrument Panel Harness Routing	--
J204	Instrument Panel Harness	--	In the instrument panel harness approximately 5 cm (1.96 in) from the park brake control switch connector breakout	Instrument Panel Harness Routing	-
J205	Instrument Panel Harness	--	In the instrument panel harness in the info display module breakout approximately 7.4 cm (2.91 in) from info display module X1	Instrument Panel Harness Routing	—
J206	Instrument Panel Harness	--	In the instrument panel harness, in the radio connector breakout, approximately 10 cm (3.93 in) from radio X4	Instrument Panel Harness Routing	—
J207	Instrument Panel Harness	--	In the instrument panel harness, in the radio connector breakout, approximately 7.5 cm (2.95 in) from radio X4	Instrument Panel Harness Routing	-
J208	Instrument Panel Harness	-	In the instrument panel harness, in the transmission shift lever connector breakout, approximately 4.5 cm (1.77 in) from X315	Instrument Panel Harness Routing	—
J209	Instrument Panel Harness	--	In the instrument panel harness approximately 2.5 cm (0.98 in) from radio X1	Instrument Panel Harness Routing	--
J210	Instrument Panel Harness	--	In the instrument panel harness approximately 6 cm (2.36 in) from radio X1	Instrument Panel Harness Routing	-
J220	Instrument Panel Harness	--	In the instrument panel harness approximately 10 cm (3.93 in) from the X260 connector breakout	Instrument Panel Harness Routing	-
J221	Instrument Panel Harness	-	In the instrument panel harness approximately 5 cm (1.96 in) from the X260 connector breakout	Instrument Panel Harness Routing	-
J222	Instrument Panel Harness	-	In the instrument panel harness approximately 2.5 cm (0.98 in) from the X250 connector breakout	Instrument Panel Harness Routing	-
J223	Instrument Panel Harness	-	In the instrument panel harness approximately 5 cm (1.96 in) from the X250 connector breakout	Instrument Panel Harness Routing	-
J224	Instrument Panel Harness	-	In the instrument panel harness, in the X275 connector breakout, approximately 7.5 cm (2.95 in) from X275	Instrument Panel Harness Routing	-
J225	Instrument Panel Harness	-	In the instrument panel harness, in the X275 connector breakout, approximately 15.8 cm (6.22 in) from X275	Instrument Panel Harness Routing	-
J226	Instrument Panel Harness	-	In the instrument panel harness, in the X275 connector breakout, approximately 18.3 cm (7.20 in) from X275	Instrument Panel Harness Routing	-
J227	Instrument Panel Harness	-	In the instrument panel harness approximately 4.6 cm (1.81 in) in to the telematics communication interface control module connector breakout	Instrument Panel Harness Routing	-
J228	Instrument Panel Harness	-	In the instrument panel harness approximately 4.6 cm (3.77 in) in to the telematics communication interface control	Instrument Panel	—

			module connector breakout	Harness Routing	
J301	Body Harness	-	In the body harness approximately 23 cm (9.05 in) from the X500 breakout	--	--
J302	Body Harness	-	In the body harness approximately 20.7 cm (8.14 in) from the X600 breakout	--	—
J303	Body Harness	-	In the body harness approximately 15.7 cm (6.18 in) from the X600 breakout	--	—
J304	Body Harness	--	In the body harness approximately 10 cm (3.93 in) from X320	—	—
J305	Body Harness	-	In the body harness approximately 10 cm (3.93 in) from the G302 breakout	--	—
J306	Body Harness	-	In the body harness approximately 25 cm (9.84 in) from the G302 breakout	--	—
J307	Body Harness	-	In the body harness approximately 30 cm (11.81 in) from the G302 breakout	--	—
J308	Body Harness	-	In the body harness approximately 28 cm (11.02 in) from the X700 breakout	--	--
J309	Body Harness	-	In the body harness approximately 18 cm (7.08 in) from the X700 breakout	--	--
J310	Body Harness	-	In the body harness approximately 8.5 cm (3.34 in) from the X700 breakout	--	--
J317	Console Harness	-	In the floor console harness approximately 5 cm (1.96 in) from X315	Center Console Harness Routing	-
J320	Body Harness	-	In the body harness approximately 5.3 cm (2.08 in) from the seat belt switch - right rear connector breakout	--	--
J350	Headliner Harness	-	In the headliner harness approximately 5 cm (1.96 in) from the breakout for overhead console connectors	--	--
J351	Headliner Harness	-	In the headliner harness approximately 6.3 cm (2.48 in) in to the breakout for the overhead console connectors	Headliner Harness Routing	-
J352	Headliner Harness	-	In the headliner harness approximately 16.2 cm (6.37 in) from the sunshade mirror lamp - right breakout	--	--
J353	Headliner Harness	-	In the headliner harness approximately 35.4 cm (13.93 in) from the sunshade mirror lamp - right breakout	--	--
J354	Headliner Harness	-	In the headliner harness approximately 45.4 cm (17.87 in) from the sunshade mirror lamp - Right breakout	--	--
J375	EVAP Harness	-	In the evaporative emissions harness approximately 10 cm (3.93 in) from X350	Underbody Harness Routing	-
			In the evaporative emissions harness approximately 18.5 cm	Underbody Harness	

J376	EVAP Harness	-	(7.28 in) from the X355 connector breakout	Routing	-
J377	EVAP Harness	-	In the evaporative emissions harness approximately 13.5 cm (5.31 in) from the X355 connector breakout	Underbody Harness Routing	—
J401	Body Harness	-	In the body harness approximately 18.4 cm (7.34 in) from the X350 breakout	Right Side of Luggage Compartment Harness Routing	--
J402	Body Harness	-	In the body harness approximately 32 cm (12.59 in) from the seat belt switch - left rear	Right Side of Luggage Compartment Harness Routing	-
J403	Body Harness	-	In the body harness approximately 6.7 cm (2.63 in) in to the fuel pump control module breakout	Right Side of Luggage Compartment Harness Routing	-
J450	Body Harness	-	In the body harness approximately 8 cm (3.14 in) from X450	Left Rear of Vehicle Harness Routing	-
J451	Rear Fascia Harness	-	In the rear fascia harness approximately 22.8 cm (8.97 in) in to the backup lamp connector breakout	Rear of Vehicle Harness Routing	-
J452	Rear Fascia Harness	-	In the rear fascia harness in the X450 and X451 breakout approximately 5 cm (1.96 in) from X451	Rear of Vehicle Harness Routing	-
J453	Rear Fascia Harness	-	In the rear fascia harness approximately 9 cm (3.54 in) from rear object sensor - left middle connector breakout	Rear of Vehicle Harness Routing	-
J454	Rear Fascia Harness	-	In the rear fascia harness approximately 10 cm (3.93 in) from the license plate lamp - left connector breakout	Rear of Vehicle Harness Routing	-
J455	Rear Fascia Harness	-	In the rear fascia harness approximately 5 cm (1.96 in) from the license plate lamp - left connector breakout	Rear of Vehicle Harness Routing	-
J456	Rear Fascia Harness	-	In the rear fascia harness approximately 7.5 cm (2.95 in) from the rear-view camera connector breakout	Rear of Vehicle Harness Routing	-
J457	Rear Fascia Harness	-	In the rear fascia harness, in the rear-view camera connector breakout, approximately 6.9 cm (2.71 in) from the rear-view camera connector	Rear of Vehicle Harness Routing	-
J515	Driver Door Harness	-	In the left front door harness approximately 8.3 cm (3.26 in) from the X510 connector breakout	Driver Door Harness Routing	-
J516	Driver Door Harness	-	In the left front door harness approximately 3 cm (1.18 in) from the X510 connector breakout	Driver Door Harness Routing	-
J517	Driver's Door Trim Harness	-	In the left door trim harness approximately 12.3 cm (4.84 in) from X505 connector breakout	Driver Door Harness Routing	-
J518	Driver's Door Trim Harness	-	In the left door trim harness approximately 16.3 cm (6.41 in) from X505 connector breakout	Driver Door Harness Routing	-

J519	Driver's Door Trim Harness	-	In the left door trim harness approximately 6.5 cm (2.55 in) from the outside rear-view mirror switch connector breakout	Driver Door Harness Routing	-
J615	Passenger Door Harness	-	In the right front door harness approximately 12.2 cm (4.80 in) from the X610 connector breakout	--	--
J715	Left Rear Door Harness	--	In the left rear door harness approximately 21.5 cm (8.46 in) from the window motor - left rear connector breakout	--	--
J815	Right Rear Door Harness	--	In the right rear door harness approximately 11.5 cm (4.52 in) from the window motor - right rear connector breakout	Right Rear Door Harness Routing	--
J901	Tailgate Harness	-	In the liftgate harness approximately 33.8 cm (13.30 in) from the rear demisting grid connector breakout	Liftgate Harness Routing	-
J902	Tailgate Harness	-	In the liftgate harness approximately 11.4 cm (4.48 in) from the rear demisting grid connector breakout	Liftgate Harness Routing	-
JX300	Body Harness	-	In the luggage compartment, behind the left trim panel	Left Side of Luggage Compartment Harness Routing	JX300
JX301	Instrument Panel Harness	-	In the passenger compartment, behind the instrument panel	-	JX301

&#169© Copyright Chevrolet. All rights reserved

Front of Vehicle/Engine Compartment Component Views

Figure 1: Front of Vehicle Components
Figure 2: Front of Vehicle Components (Opel)
Figure 3: Left Front of Vehicle Components
Figure 4: Engine Compartment Components - Front
Figure 5: Engine Compartment Components - Left
Figure 6: Engine Compartment Components - Right

© Copyright Chevrolet. All rights reserved

Powertrain Component Views

Figure 1: Transmission Components
Figure 2: Left Rear of Engine Components
Figure 3: Right Front of Engine Components

© Copyright Chevrolet. All rights reserved

Instrument Panel/Centre Console Component Views

Figure 1: Instrument Panel Components (1 of 2)
Figure 2: Instrument Panel Components (2 of 2)
Figure 3: Instrument Panel - HVAC Components
Figure 4: Center Console Components
Figure 5: Steering Column Components

© Copyright Chevrolet. All rights reserved

Passenger Compartment/Roof Component Views

Figure 1: Passenger Compartment Components
Figure 2: Headliner Components
Figure 3: Driver's Seat Components
Figure 4: Passenger Seat Components
Figure 5: Rear Seat Components

© Copyright Chevrolet. All rights reserved

Door Component Views

Figure 1: Driver Door Components
Figure 2: Passenger Door Components
Figure 3: Left Rear Door Components
Figure 4: Right Rear Door Components

© Copyright Chevrolet. All rights reserved

Luggage Compartment/Rear of Vehicle Component Views

Figure 1: Luggage Compartment Components
Figure 2: Liftgate Components
Figure 3: Rear of Vehicle Components
Figure 4: Rear of Vehicle Components (Opel)
Figure 5: Right Rear of Vehicle - Fuel Door Components

© Copyright Chevrolet. All rights reserved

Wheels/Vehicle Underbody Component Views

Figure 1: Underbody - Hybrid/EV Battery Pack Assembly Components
Figure 2: Underbody - Hybrid/EV Battery Pack Internals
Figure 3: Underbody - Hybrid/EV Battery Pack Section 1
Figure 4: Underbody - Hybrid/EV Battery Pack Section 2
Figure 5: Underbody - Hybrid/EV Battery Pack Section 3
Figure 6: Underbody - Fuel System Components
Figure 7: Underbody - Steering Components
Figure 8: Underbody - Wheel Components

© Copyright Chevrolet. All rights reserved

Ground Views

Figure 1: G101, G103, G109, and G117
Figure 2: G102, G104, and G105
Figure 3: G106 and G113
Figure 4: G201, G202, G203, and G204
Figure 5: G205 and G304
Figure 6: G301
Figure 7: G302
Figure 8: G402 and G403
Figure 9: G405 and G406

© Copyright Chevrolet. All rights reserved

Electrical Centre Identification Views

Figure 1: X50A Fuse Block - Underbonnet Label
Figure 2: X50A Fuse Block - Under bonnet Top View
Figure 3: X50A Fuse Block - Under bonnet Bottom View
Figure 4: X50A Fuse Block - Underhood X1
Figure 5: X50A Fuse Block - Underbonnet X3
Figure 6: X50A Fuse Block - Underbonnet X3
Figure 7: X50A Fuse Block - Underbonnet X4
Figure 8: X50B Fuse Block - Under bonnet Auxiliary Top View
Figure 9: X50B Fuse Block - Underbonnet Auxiliary X1
Figure 10: X50B Fuse Block - Auxiliary X2
Figure 11: X50B Fuse Block - Under bonnet Auxiliary X3
Figure 12: X51L Fuse Block - Instrument Panel Left Label
Figure 13: X51L Fuse Block - Instrument Panel Left Top View
Figure 14: X51L Fuse Block - Instrument Panel Left Bottom View
Figure 15: X51L Fuse Block - Instrument Panel Left Wire Entry
Figure 16: X51R Fuse Block - Instrument Panel Right Label
Figure 17: X51R Fuse Block - Instrument Panel Right Top View
Figure 18: X51R Fuse Block - Instrument Panel Right Bottom View
Figure 19: X51R Fuse Block - Instrument Panel Right Wire Entry
Figure 20: X50D Fuse Block - Battery Top View
Figure 21: X50D Fuse Block - Battery X1
Figure 22: X50D Fuse Block - Battery X2
Figure 23: X50D Fuse Block - Battery X3
Figure 24: X50D Fuse Block - Battery X5
Figure 25: X50D Fuse Block - Battery X6
Figure 26: X53A Fuse Block - Rear Body Label
Figure 27: X53A Fuse Block - Rear Body Top View
Figure 28: X53A Fuse Block - Rear Body Bottom View
Figure 29: X53A Fuse Block - Rear Body Wire Entry (Fuses)
Figure 30: X53A Fuse Block - Rear Body Wire Entry (Relays)

© Copyright Chevrolet. All rights reserved

Component Connector End Views

Figure 1: A4 Hybrid/EV Battery Pack X1
Figure 2: A4 Hybrid/EV Battery Pack X2
Figure 3: A4 Hybrid/EV Battery Pack X3
Figure 4: A4 Hybrid/EV Battery Pack X4
Figure 5: A4 Hybrid/EV Battery Pack X5
Figure 6: A4 Hybrid/EV Battery Pack X6
Figure 7: A4 Hybrid/EV Battery Pack X7
Figure 8: A10 Inside Rearview Mirror
Figure 9: A11 Radio X1
Figure 10: A11 Radio X4
Figure 11: A20 Radio/HVAC Control
Figure 12: A23C Tailgate Latch Assembly
Figure 13: A23C Door Catch Assembly - Driver
Figure 14: A23LR Door Catch Assembly - Left Rear
Figure 15: A23P Door Catch Assembly - Passenger
Figure 16: A23RR Door Catch Assembly - Right Rear
Figure 17: A24D Door Handle Assembly - Driver Exterior
Figure 18: A24P Door Handle Assembly - Passenger Exterior
Figure 19: A24LR Door Handle Assembly - Left Rear Exterior
Figure 20: A24RR Door Handle Assembly - Right Rear Exterior
Figure 21: A28 Hybrid Battery Contactor Assembly
Figure 22: B1C A/C Low-Side Pressure Sensor
Figure 23: B1 A/C Refrigerant Pressure Sensor
Figure 24: B5LF Wheel Speed Sensor - Left Front
Figure 25: B5LR Wheel Speed Sensor - Left Rear
Figure 26: B5RF Wheel Speed Sensor - Right Front
Figure 27: B5RR Wheel Speed Sensor - Right Rear
Figure 28: B7B Air Temperature Sensor - Duct Lower
Figure 29: B7F Air Temperature Sensor - Duct Upper
Figure 30: B9 Ambient Air Temperature Sensor

Figure 31: B10B Ambient Light/Sunload Sensor
Figure 32: B14A Transmission Output Shaft Speed Sensor
Figure 33: B15 Transmission Internal Mode Switch X1
Figure 34: B15 Transmission Internal Mode Switch X2
Figure 35: B18 Battery Current Sensor
Figure 36: B20 Brake Fluid Level Switch
Figure 37: B22 Brake Pedal Position Sensor
Figure 38: B23E Camshaft Position Sensor - Exhaust
Figure 39: B23F Camshaft Position Sensor - Intake
Figure 40: B24 Cellular Phone Microphone
Figure 41: B26 Crankshaft Position Sensor
Figure 42: B30 Hybrid Battery Pack Current Sensor
Figure 43: B34 Engine Coolant Temperature Sensor
Figure 44: B37 Engine Oil Pressure Switch
Figure 45: B39 A/C Evaporator Temperature Sensor
Figure 46: B47 Fuel Pressure Sensor
Figure 47: B52A Heated Oxygen Sensor 1
Figure 48: B52B Heated Oxygen Sensor 2
Figure 49: B55 Bonnet Ajar Switch
Figure 50: B59L Front Impact Sensor - Left
Figure 51: B59R Front Impact Sensor - Right
Figure 52: B63LF Side Impact Sensor - Left Front
Figure 53: B63LR Side Impact Sensor - Left Rear
Figure 54: B63RF Side Impact Sensor - Right Front
Figure 55: B63RR Side Impact Sensor - Right Rear
Figure 56: B68 Knock Sensor
Figure 57: B74 Manifold Absolute Pressure Sensor
Figure 58: B75B Mass Airflow/Intake Air Temperature Sensor
Figure 59: B78A Front Object Sensor - Left Outer
Figure 60: B78B Front Object Sensor - Right Outer
Figure 61: B78C Front Object Sensor - Left Middle
Figure 62: B78D Front Object Sensor - Right Middle
Figure 63: B78E Rear Object Sensor - Left Middle
Figure 64: B78F Rear Object Sensor - Right Middle
Figure 65: B78G Rear Object Sensor - Left Outer
Figure 66: B78H Rear Object Sensor - Right Outer
Figure 67: B87 Rear-view Camera

Figure 68: B88D Seat Belt Switch - Driver
Figure 69: B88LR Seat Belt Switch - Left Rear
Figure 70: B88P Seat Belt Switch - Passenger
Figure 71: B88RR Seat Belt Switch - Right Rear
Figure 72: B99 Steering Wheel Angle Sensor
Figure 73: B107 Accelerator Pedal Position Sensor
Figure 74: B118 Windscreen Washer Fluid Level Sensor
Figure 75: B119 Multi-Axis Acceleration Sensor
Figure 76: B135 Coolant Heater Temperature Sensor
Figure 77: B150 Fuel Tank Pressure Sensor
Figure 78: B160 Windscreen Temperature and Inside Moisture Sensor
Figure 79: B197 Charge Port Door Ajar Switch
Figure 80: B201 Brake Control Brake Pedal Position Sensor
Figure 81: B202 Hybrid Electronics Coolant Temperature Sensor
Figure 82: B203 Engine Coolant Radiator Temperature Sensor
Figure 83: B204A Hybrid/EV Battery Pack Coolant Temperature Sensor 1
Figure 84: B204B Hybrid/EV Battery Pack Coolant Temperature Sensor 2
Figure 85: B207A Drive Motor 1 Temperature Sensor
Figure 86: B207B Drive Motor 2 Temperature Sensor
Figure 87: B222 A/C Refrigerant Low-Side Temperature Sensor
Figure 88: C4A Hybrid/EV Battery Pack Cell Section 1 X1
Figure 89: C4A Hybrid/EV Battery Pack Cell Section 1 X2
Figure 90: C4A Hybrid/EV Battery Pack Cell Section 1 X3
Figure 91: C4B Hybrid/EV Battery Pack Cell Section 2 X1
Figure 92: C4B Hybrid/EV Battery Pack Cell Section 2 X2
Figure 93: C4C Hybrid/EV Battery Pack Cell Section 3 X1
Figure 94: C4C Hybrid/EV Battery Pack Cell Section 3 X2
Figure 95: C4C Hybrid/EV Battery Pack Cell Section 3 X3
Figure 96: C4C Hybrid/EV Battery Pack Cell Section 3 X4
Figure 97: E4N Park/Indicator Lamp - Left
Figure 98: E4P Park/Indicator Lamp - Right
Figure 99: E4Y Indicator Repeater Lamp - Left
Figure 100: E4Z Indicator Repeater Lamp - Right
Figure 101: E5 Reversing Light
Figure 102: E6 Centre High Mounted Brake Lamp
Figure 103: E7L Number Plate Lamp - Left
Figure 104: E7R Number Plate Lamp - Right

Figure 105: E14A Seat Heating Element - Driver Back
Figure 106: E14B Seat Heating Element - Driver Cushion
Figure 107: E14C Seat Heating Element - Passenger Back
Figure 108: E14D Seat Heating Element - Passenger Cushion
Figure 109: E18A Rear Demister Grid - Upper X1
Figure 110: E18A Rear Demisting Grid - Upper X2
Figure 111: E18B Rear Demisting Grid - Lower X2
Figure 112: E31L Sunshade Mirror Lamp - Left
Figure 113: E31R Sunshade Mirror Lamp - Right
Figure 114: E32 Cigarette Lighter Receptacle
Figure 115: E33 Cargo Lamp
Figure 116: E36AH Interior light
Figure 117: E37F Dome/Reading Lamps - Front
Figure 118: E41 Engine Coolant Thermostat Heater
Figure 119: E42L Tail Lamp Assembly - Left
Figure 120: E42R Tail Lamp Assembly - Right
Figure 121: F103 Power Inverter Module Assembly Cable Cover
Figure 122: F105L Roof Rail Air Bag - Left
Figure 123: F105R Roof Rail Air Bag - Right
Figure 124: F106LF Side Air Bag - Left Front
Figure 125: F106RF Side Air Bag - Right Front
Figure 126: F112D Seat Belt Retractor Pretensioner - Driver
Figure 127: F112P Seat Belt Retractor Pretensioner - Passenger
Figure 128: F114D Knee Air Bag - Driver's
Figure 129: F114P Knee Air Bag - Passenger
Figure 130: F116 A/C Compressor Jumper Connector
Figure 131: F117 14V Power Module Jumper Connector
Figure 132: F118 Hybrid/EV Battery Pack Connector Jumper Connector
Figure 133: F119 Coolant Heater Control Module Jumper Connector
Figure 134: F120 Battery Charger Jumper Connector
Figure 135: G1 A/C Compressor X1
Figure 136: G1 A/C Compressor X2
Figure 137: G10L Cooling Fan Motor - Left
Figure 138: G10R Cooling Fan Motor - Right
Figure 139: A7 Fuel Pump and Level Sensor Assembly
Figure 140: G24 Windscreen Washer Pump
Figure 141: G35 Hybrid Electronics Coolant Pump

Figure 142: G36 Auxiliary Heater Coolant Pump
Figure 143: G37 Hybrid Battery Pack Coolant Pump
Figure 144: G38 14V Power Module Cooling Fan
Figure 145: K1 14 V Power Module X2
Figure 146: K1 14 V Power Module X1
Figure 147: K1 14 V Power Module X3
Figure 148: K1 14 V Power Module X4
Figure 149: K8 Blower Motor Control Module X1
Figure 150: K9 Body Control Module X1
Figure 151: K9 Body Control Module X2
Figure 152: K9 Body Control Module X3
Figure 153: K9 Body Control Module X4
Figure 154: K9 Body Control Module X5
Figure 155: K9 Body Control Module X6
Figure 156: K9 Body Control Module X7
Figure 157: K10 Coolant Heater Control Module X1
Figure 158: K10 Coolant Heater Control Module X2
Figure 159: K16 Battery Energy Control Module X1
Figure 160: K16 Battery Energy Control Module X2
Figure 161: K16 Battery Energy Control Module X3
Figure 162: K17 Electronic Brake Control Module
Figure 163: K20 Engine Control Module X1
Figure 164: K20 Engine Control Module X2
Figure 165: K20 Engine Control Module X3
Figure 166: K27 Fuel Pump Control Module
Figure 167: K29 Seat Heating Control Module X1
Figure 168: K29 Seat Heating Control Module X2
Figure 169: K29 Seat Heating Control Module X3
Figure 170: K33 HVAC Control Module X1
Figure 171: K33 HVAC Control Module X2
Figure 172: K33 HVAC Control Module X3
Figure 173: K35 Ignition Coil Module
Figure 174: K36 Inflatable Restraint Sensing and Diagnostic Module X1
Figure 175: K36 Inflatable Restraint Sensing and Diagnostic Module X2
Figure 176: K41 Parking Assist Control Module X1
Figure 177: K41 Parking Assist Control Module X2
Figure 178: K41 Parking Assist Control Module X3

Figure 179: K43 Power Steering Control Module X1
Figure 180: K43 Power Steering Control Module X2
Figure 181: K65 Tyre Pressure Indicator Module
Figure 182: K73 Telematics Communication Interface Module X1
Figure 183: K73 Telematics Communication Interface Module X2
Figure 184: K77 Remote Control Door Lock Receiver
Figure 185: K83 Parking Brake Control Module
Figure 186: K84 Keyless Entry Control Module X2
Figure 187: K84 Keyless Entry Control Module X1
Figure 188: K85 Passenger Presence Detection Module
Figure 189: K89 Immobiliser Control Module
Figure 190: K112A Hybrid/EV Battery Interface Control Module 1 X1
Figure 191: K112A Hybrid/EV Battery Interface Control Module 1 X2
Figure 192: K112A Hybrid/EV Battery Interface Control Module 1 X3
Figure 193: K112A Hybrid/EV Battery Interface Control Module 1 X4
Figure 194: K112B Hybrid/EV Battery Interface Control Module 2 X1
Figure 195: K112B Hybrid/EV Battery Interface Control Module 2 X2
Figure 196: K112B Hybrid/EV Battery Interface Control Module 2 X3
Figure 197: K112C Hybrid/EV Battery Interface Control Module 3 X1
Figure 198: K112C Hybrid/EV Battery Interface Control Module 3 X2
Figure 199: K112C Hybrid/EV Battery Interface Control Module 3 X4
Figure 200: K112D Hybrid/EV Battery Interface Control Module 4 X1
Figure 201: K112D Hybrid/EV Battery Interface Control Module 4 X2
Figure 202: K112D Hybrid/EV Battery Interface Control Module 4 X3
Figure 203: K114B Hybrid Powertrain Control Module 2 X1
Figure 204: K114B Hybrid Powertrain Control Module 2 X2
Figure 205: M6 Air Temperature Door Actuator
Figure 206: M15A Drive Motor 1 X1
Figure 207: M15B Drive Motor 2 X1
Figure 208: M15B Drive Motor 2 X2
Figure 209: M27 Fuel Door Unlatch Actuator
Figure 210: M37 Mode Door Actuator
Figure 211: M46 Air Recirculation Door Motor
Figure 212: M74D Window Motor - Driver
Figure 213: M74LR Window Motor - Left Rear
Figure 214: M74P Window Motor - Passenger
Figure 215: M74RR Window Motor - Right Rear

Figure 216: M75 Windscreen Wiper Motor
Figure 217: M77D Outside Rear-view Mirror Motor - Driver
Figure 218: M77P Outside Rear-view Mirror Motor - Passenger
Figure 219: M80 Charge Port Door Unlatch Actuator
Figure 220: P12L Horn - Left
Figure 221: P12R Horn - Right
Figure 222: P14 Passenger Air bag Disable Indicator
Figure 223: P16 Instrument Cluster
Figure 224: P17 Info Display Module X1
Figure 225: P19AC Speaker - Subwoofer
Figure 226: P19AG Speaker - Left Front Door
Figure 227: P19H Speaker - Left Front Tweeter
Figure 228: P19AL Speaker - Left Rear Door
Figure 229: P19AH Speaker - Right Front Door
Figure 230: P19V Speaker - Right Front Tweeter
Figure 231: P19AM Speaker - Right Rear Door
Figure 232: P36 Battery State of Charge Indicator
Figure 233: P208 Fuel Door Status Switch Assembly
Figure 234: Q6E Camshaft Position Actuator Solenoid Valve - Exhaust
Figure 235: Q6F Camshaft Position Actuator Solenoid Valve - Intake
Figure 236: Q8 Control Solenoid Valve Assembly X1
Figure 237: Q8 Control Solenoid Valve Assembly X2
Figure 238: Q8 Control Solenoid Valve Assembly X3
Figure 239: Q8 Control Solenoid Valve Assembly X4
Figure 240: Q12 Evaporative Emissions Purge Solenoid Valve
Figure 241: Q13 Evaporative Emission Vent Solenoid Valve
Figure 242: Q17A Fuel Injector 1
Figure 243: Q17B Fuel Injector 2
Figure 244: Q17C Fuel Injector 3
Figure 245: Q17D Fuel Injector 4
Figure 246: Q38 Throttle Body
Figure 247: Q63 Evaporative Emission System Leak Detection Pump Assembly
Figure 248: Q65 Hybrid/EV Battery Pack Coolant Control Valve
Figure 249: Q66 Passenger Compartment Heater Coolant Control Valve
Figure 250: S3 Transmission Shift Lever
Figure 251: S15 Hybrid Battery Pack High-Voltage Manual Disconnect Lever X1
Figure 252: S15 Hybrid/EV Battery Pack High Voltage Manual Disconnect Lever X2

Figure 253: S16 Driver Information Centre Switch
Figure 254: S25 Garage Door Opener
Figure 255: S46 Tailgate Handle Switch
Figure 256: S48B Multi-function Switch - Overhead Console
Figure 257: S51 Telematics Button Assembly
Figure 258: S52 Outside Rear-view Mirror Switch
Figure 259: S70L Steering Wheel Controls Switch - Left
Figure 260: S70R Steering Wheel Controls Switch - Right
Figure 261: S78 Indicator/Multifunction Switch
Figure 262: S79D Window Switch - Driver
Figure 263: S79LR Window Switch - Left Rear
Figure 264: S79P Window Switch - Passenger
Figure 265: S79RR Window Switch - Right Rear
Figure 266: S82 Windscreen Wiper/Washer Switch
Figure 267: S83 Vehicle On/Off Switch
Figure 268: S91 Park Brake Switch
Figure 269: S109 Sport Mode Switch
Figure 270: S113 Charge Port Door Open Request Switch
Figure 271: S117 Refuel Request Switch
Figure 272: T3 Audio Amplifier X1
Figure 273: T3 Audio Amplifier X2
Figure 274: T3 Audio Amplifier X3
Figure 275: T6 Power Inverter Module X1
Figure 276: T6 Power Inverter Module X2
Figure 277: T6 Power Inverter Module X3
Figure 278: T6 Power Inverter Module X4
Figure 279: T6 Power Inverter Module X5
Figure 280: T6 Power Inverter Module X6
Figure 281: T6 Power Inverter Module X7
Figure 282: T6 Power Inverter Module X8
Figure 283: T10E Keyless Entry Antenna - Rear Compartment
Figure 284: T10K Keyless Entry Aerial - Centre Console Rear
Figure 285: T10 Keyless Entry Aerial
Figure 286: T18 Battery Charger X1
Figure 287: T18 Battery Charger X2
Figure 288: T18 Battery Charger X3
Figure 289: T18 Battery Charger X4

Figure 290: X80H Accessory Power Receptacle - Centre Console
Figure 291: X80L Accessory Power Receptacle - Rear Console
Figure 292: X83 Auxiliary Audio Input
Figure 293: X84B Auxiliary Data Connector
Figure 294: X84 Data Link Connector
Figure 295: X85 Steering Wheel Air Bag Coil X1
Figure 296: X85 Steering Wheel Air Bag Coil X3
Figure 297: X85 Steering Wheel Air Bag Coil X2
Figure 298: X98 Hybrid/EV Battery Charger Receptacle

© Copyright Chevrolet. All rights reserved

Splice Pack Connector End Views

Figure 1: JX300
Figure 2: JX301

© Copyright Chevrolet. All rights reserved

Inline Harness Connector End Views

Figure 1: X100 Forward Lamp Harness to Front Fascia Harness (with UD5)
Figure 2: X101 Front Fascia Harness to Forward Lamp Harness (without UD5)
Figure 3: X102 Engine Harness to Cooling Fan Harness
Figure 4: X103 Forward Lamp Harness to Cooling Fan Harness
Figure 5: X104 Cooling Fans to Cooling Fan Harness
Figure 6: X105 Forward Lamp Harness to Body Harness
Figure 7: X107 Forward Lamp Harness to Body Harness
Figure 8: X110 Forward Lamp Harness to Left Headlamp Assembly
Figure 9: X120 Forward Lamp Harness to Right Headlamp Assembly
Figure 10: X175 Engine Harness to Transmission Harness
Figure 11: X180 Forward Lamp Harness to Auxiliary Heater Coolant Pump Harness
Figure 12: X190 Engine Harness to Body Harness
Figure 13: X225 Instrument Panel Harness to Body Harness
Figure 14: X250 Instrument Panel Top Pad Harness to Instrument Panel Harness
Figure 15: X252 Instrument Panel Harness to HVAC Harness
Figure 16: X255 Instrument Panel Harness to Passenger Air Bag Harness
Figure 17: X275 Instrument Panel Harness to Body Harness
Figure 18: X310 Headliner Harness to Instrument Panel Harness
Figure 19: X311 Headliner Harness to Instrument Panel Harness
Figure 20: X315 Console Harness to Instrument Panel Harness
Figure 21: X320 Body Harness to Driver Seat Harness
Figure 22: X322 Side Air Bag Jumper to Driver Seat Harness
Figure 23: X325 Body Harness to Passenger Seat Harness
Figure 24: X327 Side Air Bag Jumper to Passenger Seat Harness
Figure 25: X345 Driver Seat Back Heater to Driver Seat Harness (KA1)
Figure 26: X346 Passenger Seat Back Heater to Passenger Seat Harness (KA1)
Figure 27: X350 Body Harness to EVAP Harness
Figure 28: X351 Body Harness to EVAP Harness
Figure 29: X354 EVAP Harness to Fuel Pump Harness
Figure 30: X355 EVAP Harness to Fuel Pressure Harness

Figure 31: X450 Body Harness to Rear Fascia Harness (with UD5)
Figure 32: X451 Body Harness to Rear Fascia Harness (without UD5)
Figure 33: X500 Driver Door Harness to Body Harness
Figure 34: X505 Driver Door Harness to Driver Door Trim Harness
Figure 35: X510 Driver Door Harness to Outside Rear-view Mirror - Driver
Figure 36: X600 Passenger Door Harness to Body Harness
Figure 37: X610 Passenger Door Harness to Outside Rear-view Mirror - Passenger
Figure 38: X700 Left Rear Door Harness to Body Harness
Figure 39: X800 Right Rear Door Harness to Body Harness
Figure 40: X900 Liftgate Jumper Harness to Body Harness
Figure 41: X901 Liftgate Jumper Harness to Body Harness
Figure 42: X905 Liftgate Jumper Harness to Liftgate Harness
Figure 43: X906 Liftgate Jumper Harness to Liftgate Harness

© Copyright Chevrolet. All rights reserved

DTC B144B

Diagnostic Instructions

- Perform the Diagnostic System Check - Vehicle prior to using this diagnostic procedure.
- Review Strategy Based Diagnosis for an overview of the diagnostic approach.
- Diagnostic Procedure Instructions provides an overview of each diagnostic category.

DTC Descriptors

DTC B144B 01 : Run/Crank Power Relay Circuit Short to Battery

DTC B144B 02 : Run/Crank Power Relay Circuit Short-Circuit to Earth

DTC B144B 04 : Run/Crank Power Relay Circuit Open

Diagnostic Fault Information

Circuit	Short to Ground	Open/High Resistance	Short to Voltage	Signal Performance
Ignition	B144B 02*	B144B 04*	B144B 01*	-
Control	B144B 02**	1	2	--
1. No Start 2. Engine will continue to run after the ignition is turned OFF * DTC set in keyless entry control module ** DTC Set in BCM				

Circuit/System Description

The body control module (BCM) controls the ignition run relay through the control circuit by applying voltage to the ignition run relay coil control circuit. The ignition run relay is

energised when the vehicle is in Service Mode, the vehicle is ON or when a remote start is requested. This is part of the BCM's primary function in controlling the vehicle power mode.

The keyless entry control module controls the back-up power for the ignition run relay through the control circuit by applying voltage to the ignition circuit. This circuit is a pass-thru in the BCM and will energise the ignition circuit when the vehicle is in Service Mode, the vehicle is ON or when a remote start is requested.

Conditions for Running the DTC

System voltage is greater than 9 V

Conditions for Setting the DTC

B144B 01

The ignition output is not active and a short-circuit to battery is detected 3 consecutive times on the ignition voltage circuit

B144B 02 - BCM

A short-circuit to earth is detected on the ignition run relay coil control circuit

B144B 02 - Keyless Entry Control Module

The ignition output is active and a short-circuit to earth is detected 3 consecutive times on the ignition voltage circuit

B144B 04

The ignition output is not active and an open-circuit is detected 20 consecutive times on the ignition voltage circuit

Action Taken When the DTC Sets

B144B 01, B144B 04

No action is taken

B144B 02

The ignition relay is deactivated when the fault is set. After 100 ms, the ignition run relay will be activated. If the fault is still set, the relay will be deactivated. The ignition run relay will again be activated after 100 ms. If this also results in a fault, the ignition run relay will be deactivated until a new ignition request is received.

Conditions for Clearing the DTC

- The current DTC will clear when the malfunction is no longer present and an ignition request is received.
- A history DTC will clear after 40 malfunction-free ignition cycles.

Diagnostic Aids

A short-circuit to voltage on the ignition run relay coil control will cause the engine to remain running after the vehicle mode is changed to OFF.

Reference Information

Schematic Reference

Power Moding Schematics

Connector End View Reference

Component Connector End Views

Description and Operation

Power Mode Description and Operation

Electrical Information Reference

- Circuit Testing
- Connector Repairs
- Testing for Intermittent Conditions and Poor Connections
- Wiring Repairs

Scan Tool Reference

Control Module References for scan tool information

Circuit/System Verification

Vehicle in Service Mode, verify DTC B1330 is not set.

If the DTC is set, refer to DTC B1325, B1330, B1517, C0800, C0899, C0900, C12E1, C12E2, P0562, P0563, P1A0C, P1A0D, or P1EFC .

Circuit/System Testing

1. Vehicle OFF, disconnect the X2 harness connector at the K84 keyless entry control module.
2. Verify that a test lamp illuminates between the B+ circuit terminal 5 and ground.
   If the test lamp does not illuminate, test the B+ circuit for an open-circuit/high resistance. If the B+ circuit fuse is open, test the B+ circuit for a short-circuit to earth.
3. Connect the X2 harness connector at the K84 keyless entry control module. Disconnect the X3 harness connector at the K9 body control module.
4. Vehicle OFF, test for less than 1 V between the ignition circuit terminal 6 and earth.
   If greater than the specified range, test the ignition circuit for a short-circuit to voltage. If the circuit tests normal, replace the K84 keyless entry control module.
5. Vehicle in Service Mode, verify that a test lamp illuminates between the ignition circuit terminal 6 and earth.
   If the test lamp does not illuminate, test the ignition circuit for a short to ground or an open/high resistance. If the circuit tests normal, replace the K84 keyless entry control module.
6. Vehicle OFF, connect the X3 harness connector at the K9 body control module. Disconnect the KR74 ignition run relay.
7. Vehicle OFF and all vehicle systems OFF. It may take up to 2 minutes for all vehicle systems to power down. Test for less than 10 Ω between the ground circuit terminal 85 and ground.
   If greater than the specified range, test the ground circuit for an open/high resistance.
8. Connect a test lamp between the control circuit terminal 86 and earth.
9. Cycle between Service Mode and vehicle OFF. The test lamp should turn ON and OFF when changing Service Modes and vehicle OFF.
   If the test lamp is always ON, test the control circuit for a short to voltage. If the circuit tests normal, replace the K9 body control module.
   If the test lamp is always OFF, test the control circuit for a short to ground or open/high resistance. If the circuit tests normal, replace the K9 body control module.
10. If all circuits test normal, test or replace the KR74 ignition run relay.

Component Testing

1. Vehicle OFF, disconnect the KR74 ignition run relay.
2. Test for 70-150 Ω between terminals 85 and 86.
   If the resistance is not within the specified range, replace the KR74 ignition run relay.
3. Test for infinite resistance between the following terminals:
   - 30 and 86
   - 30 and 87
   - 30 and 85
   - 85 and 87

   If less than specified, replace the KR74 ignition run relay.
4. Install a 3 A fused jumper wire between relay terminal 86 and 12 V. Install a jumper wire between relay terminal 85 and earth. Measure for less than 5 Ω between terminals 87 and 30.
   If greater than specified, replace the KR74 ignition run relay.

Repair Instructions

Perform the Diagnostic Repair Verification after completing the repair.

- Relay Replacement : Within an Electrical Center → Attached to Wire Harness
- Control Module References for BCM or keyless entry control module replacement, programming and set-up

&#169© Copyright Chevrolet. All rights reserved

DTC B1451

Diagnostic Instructions

- Perform the Diagnostic System Check - Vehicle prior to using this diagnostic procedure.
- Review Strategy Based Diagnosis for an overview of the diagnostic approach.
- Diagnostic Procedure Instructions provides an overview of each diagnostic category.

DTC Descriptors

DTC B1451 01: Accessory Power Circuit Short-Circuit to Battery

DTC B1451 02: Accessory Power Circuit Short-Circuit to Earth

DTC B1451 04: Accessory Power Circuit Open

Diagnostic Fault Information

Circuit	Short to Ground	Open/High Resistance	Short to Voltage	Signal Performance
Ignition	B1451 02	B1451 04	B1451 01	--

Circuit/System Description

The keyless entry control module provides back-up controls for the ignition power circuit, through the control circuit, by applying voltage to the circuit. The ignition power circuit is energised when the vehicle power mode is in Vehicle ON or Vehicle in Service Mode.

Conditions for Running the DTC

B1451 01, B1451 04

- Vehicle power mode is Vehicle OFF
- Module is awake

- DTC B1451 not already set
- System voltage between 6 and 16 V

B1451 02

- Vehicle power mode is Vehicle ON or Vehicle in Service Mode
- Module is awake
- The DTC is only run when the output is active
- DTC B1451 is not already set
- System voltage between 6 and 16 V

Conditions for Setting the DTC

B1451 01

Ignition output is not active and a short-circuit to battery is detected 3 consecutive times.

B1451 02

Ignition output is active and a short-cricuit to earth is detected 3 consecutive times.

B1451 04

Ignition output is not active and an open-circuit is detected 20 consecutive times.

Action Taken When the DTC Sets

B1451 02

The ignition output is deactivated when a short-circuit to earth is detected. After 100 ms the output is activated again. This happens 3 times and then the output is deactivated until a new Vehicle ON or Vehicle in Service Mode request is received.

B1451 01, B1451 04

No action is taken.

Conditions for Clearing the DTC

- The current DTC will clear when the malfunction is no longer present during a DTC check.

- A history DTC clears when the module power mode cycle counter reaches the reset threshold of 40, without a repeat of the malfunction.

Diagnostic Aids

- A short-circuit to voltage in the ignition control circuit will keep the vehicle modules awake, which can drain the vehicle's battery.
- A short-circuit to earth in the extension of this circuit through the body control module can back feed to the keyless entry control module. Check for a short-circuit to earth on the ignition circuit on the other side of the ignition pass thru, in the body control module, before replacing the body control module.

Reference Information

Schematic Reference

Power Moding Schematics

Connector End View Reference

Component Connector End Views

Description and Operation

Power Mode Description and Operation

Electrical Information Reference

- Circuit Testing
- Connector Repairs
- Testing for Intermittent Conditions and Poor Connections
- Wiring Repairs

Scan Tool Reference

Control Module References for scan tool information

Circuit/System Verification

Verify DTC B1330 is not set.

If the DTC is set, refer to DTC B1325, B1330, B1517, C0800, C0899, C0900, C12E1, C12E2, P0562, P0563, P1A0C, P1A0D, or P1EFC .

Circuit/System Testing

1. Vehicle OFF, disconnect the X2 harness connector at the K84 keyless entry control module.
2. Verify that a test lamp illuminates between B+ circuit terminal 5 and ground.
   If the test lamp does not illuminate, test the B+ circuit for a short to ground or an open/high resistance.
3. Vehicle OFF, reconnect the X2 harness connector at the K84 keyless entry control module and disconnect the X3 harness connector at the K9 body control module.
4. Vehicle OFF, test for less than 1 V between the ignition circuit terminal 5 and earth.
   If greater than the specified range, test the ignition circuit for a short-circuit to voltage. If the circuit tests normal, replace the K84 keyless entry control module.
5. Vehicle in Service Mode, verify that a test lamp illuminates between the ignition circuit terminal 5 and earth.
   If the test lamp does not illuminate, test the ignition circuit for a short to ground or an open/high resistance. If the circuit tests normal, replace the K84 keyless entry control module.
6. If all circuits test normal, replace the K9 body control module.

Repair Instructions

Perform the Diagnostic Repair Verification after completing the repair.

Control Module References for the appropriate control module replacement, programming and set-up

&#169© Copyright Chevrolet. All rights reserved

DTC C0847, C0848, C1240 or C1241

Diagnostic Instructions

- Perform the Diagnostic System Check - Vehicle prior to using this diagnostic procedure.
- Review Strategy Based Diagnosis for an overview of the diagnostic approach.
- Diagnostic Procedure Instructions provides an overview of each diagnostic category.

DTC Descriptors

DTC C0847 00: Device Ignition 1 Circuit Low

DTC C0848 00: Device Ignition 1 Circuit High

DTC C1240 00: Electronic Brake Control Module Ignition On/Start Switch Circuit Low Voltage

DTC C1241 00: Electronic Brake Control Module Ignition On/Start Switch Circuit High Voltage

Diagnostic Fault Information

Circuit	Short to Ground	Open/High Resistance	Short to Voltage	Signal Performance
Ignition	C0847 00, C1240 00	C0847 00, C1240 00	C0848 00, C1241 00	--

Circuit/System Description

The body control module (BCM) controls the ignition relay through the control circuit by applying voltage to the circuit. The ignition circuit is energised when the vehicle power mode is Vehicle ON or Vehicle in Service Mode. The hybrid powertrain control module 2 sends the Vehicle ON or Vehicle in Service Mode power mode status in a serial data message to the electronic brake control module.

Conditions for Running the DTC

C0847 00, C1240 00

- Hybrid powertrain control module 2 is awake.
- System voltage between 9 and 16 V.
- Vehicle power mode is Vehicle ON or Vehicle in Service Mode.
- The DTC can only run when the output is activated.

C0848 00, C1241 00

- Hybrid powertrain control module 2 is awake.
- System voltage between 9 and 16 V.
- Vehicle power mode is Vehicle OFF.

Conditions for Setting the DTC

C0847 00, C1240 00

- Hybrid powertrain control module 2 is awake.
- Ignition output is active and a short-circuit to earth or open-circuit is detected for greater than 5 seconds.

C0848 00, C1241 00

- Hybrid powertrain control module 2 is awake.
- Ignition output is not active and a short-circuit to battery is detected for greater than 5 seconds.

Action Taken When the DTC Sets

No action is taken.

Conditions for Clearing the DTC

- The current DTC will clear when the malfunction is no longer present during a DTC check.
- A history DTC clears when the module power mode cycle counter reaches the reset threshold of 40, without a repeat of the malfunction.

Diagnostic Aids

A short-circuit to voltage in the ignition circuit will keep the vehicle modules awake, which can drain the vehicle's battery.

Reference Information

Schematic Reference

Power Distribution Schematics

Connector End View Reference

Component Connector End Views

Description and Operation

Power Mode Description and Operation

Electrical Information Reference

- Circuit Testing
- Connector Repairs
- Testing for Intermittent Conditions and Poor Connections
- Wiring Repairs

Scan Tool Reference

Control Module References for scan tool information

Circuit/System Verification

Verify DTC B144B is not set.

If the DTC is set, refer to DTC B144B .

Circuit/System Testing

1. Disconnect the harness connector at the K17 electronic brake control module.
2. Vehicle OFF, verify that a test lamp does not illuminate between the ignition circuit terminal 14 and earth.
   If the test lamp illuminates, test the ignition circuit for a short to voltage. If the circuit tests normal, refer to Power Mode Mismatch .
3. Vehicle in Service Mode, verify that a test lamp illuminates between the ignition circuit terminal 14 and earth.
   If the test lamp does not illuminate, test the ignition circuit for a short to ground or an open/high resistance. If the circuit tests normal, refer to Power Mode Mismatch .
4. If all circuits test normal, replace the K17 electronic brake control module.

Repair Instructions

Perform the Diagnostic Repair Verification after completing the repair.

See Control Module References for electronic brake control module replacement, programming and set-up

&#169© Copyright Chevrolet. All rights reserved

DTC C0857 or C1242

Diagnostic Instructions

- Perform the Diagnostic System Check - Vehicle prior to using this diagnostic procedure.
- Review Strategy Based Diagnosis for an overview of the diagnostic approach.
- Diagnostic Procedure Instructions provides an overview of each diagnostic category.

DTC Descriptors

DTC C0857 00: Device Ignition Accessory Circuit Low

DTC C1242 00: Electronic Brake Control Module Ignition Accessory Switch Circuit Low Voltage

Diagnostic Fault Information

Circuit	Short to Ground	Open/High Resistance	Short to Voltage	Signal Performance
Serial Data Wake-Up	C0857 00, C1242 00	C0857 00, C1242 00	--	--

Circuit/System Description

The hybrid powertrain control module 2 sends the serial data wake-up power mode status in a serial data message to the electronic brake control module (EBCM). The hybrid powertrain control module 2 also powers up the serial data wake-up circuit to the EBCM when the vehicle power mode is Vehicle ON or Vehicle in Service Mode.

Conditions for Running the DTC

- Hybrid powertrain control module 2 is awake
- Vehicle power mode is Vehicle ON or Vehicle in Service Mode
- Battery energy control module is awake
- System voltage greater than 9 V

Conditions for Setting the DTC

- Hybrid powertrain control module 2 is awake
- Ignition input is active, and 500 ms after the ignition input transitions high, a voltage below 5 V is detected 3 consecutive times

Action Taken When the DTC Sets

No action is taken.

Conditions for Clearing the DTC

- The current DTC will clear when the malfunction is no longer present.
- A history DTC clears when the module power mode cycle counter reaches the reset threshold of 40, without a repeat of the malfunction.

Diagnostic Aids

A short-circuit to voltage in the serial data wake-up circuit will keep the vehicle modules awake, which can drain the vehicle's battery.

Reference Information

Schematic Reference

Data Communication Schematics

Connector End View Reference

Component Connector End Views

Description and Operation

Power Mode Description and Operation

Electrical Information Reference

- Circuit Testing
- Connector Repairs
- Testing for Intermittent Conditions and Poor Connections
- Wiring Repairs

Scan Tool Reference

Control Module References for scan tool information

Circuit/System Testing

1. Disconnect the harness connector at the K17 electronic brake control module.
2. Vehicle OFF, verify that a test lamp does not illuminate between the serial data wake-up circuit terminal 12 and earth.
   If the test lamp illuminates, test the serial data wake-up circuit for a short-circuit to earth. If the circuit tests normal, replace the K114B hybrid powertrain control module 2.
3. Vehicle in Service Mode, verify that a test lamp illuminates between the serial data wake-up circuit terminal 12 and earth.
   If the test lamp does not illuminate, test the serial data wake-up circuit for a short-circuit to earth or an open-circuit/high resistance. If the circuit tests normal, replace the K114B hybrid powertrain control module 2.
4. If all circuits test normal, replace the K17 electronic brake control module.

Repair Instructions

Perform the Diagnostic Repair Verification after completing the repair.

Control Module References for the appropriate control module replacement, programming and set-up

&#169© Copyright Chevrolet. All rights reserved

DTC P15B9, P15BA, P1A5E, P1A5F, P1EF6, P1EF7, P2534 or P2535

Diagnostic Instructions

- Perform the Diagnostic System Check - Vehicle prior to using this diagnostic procedure.
- Review Strategy Based Diagnosis for an overview of the diagnostic approach.
- Diagnostic Procedure Instructions provides an overview of each diagnostic category.

DTC Descriptors

DTC P15B9: Electric A/C Compressor Control Module Ignition On/Start Switch Circuit Low Voltage

DTC P15BA: Electric A/C Compressor Control Module Ignition On/Start Switch Circuit High Voltage

DTC P1A5E: Battery Energy Control Module Ignition On/Start Switch Circuit Low Voltage

DTC P1A5F: Battery Energy Control Module Ignition On/Start Switch Circuit High Voltage

DTC P1EF6: Battery Charger Control Module Ignition On/Start Switch Circuit Low Voltage

DTC P1EF7: Battery Charger Control Module Ignition On/Start Switch Circuit High Voltage

DTC P2534: Ignition On/Start Switch Circuit Low Voltage

DTC P2535: Ignition On/Start Switch Circuit High Voltage

Diagnostic Fault Information

Circuit	Short to Ground	Open/High Resistance	Short to Voltage	Signal Performance
Battery Charger Control Module Ignition - Terminal A	P1EF6	P1EF6	P1EF7	-
Battery Energy Control Module Ignition - Terminal 4	P1A5E	P1A5E	P1A5F	-
Electric A/C Compressor Control Module Ignition - Terminal 3	P15B9	P15B9	P15BA	-

Fuel Pump Control Module Ignition - Terminal 21	P2534	P2534	P2535	-
TCM Ignition - Terminal 13	P2534	P2534	P2535	--

Circuit/System Description

The body control module (BCM) controls the ignition run relay through the control circuit by applying voltage to the circuit. The ignition circuit is energised when the vehicle power mode is Vehicle ON or Vehicle in Service Mode. The hybrid powertrain control module 2 sends the vehicle power mode status in a serial data message to the battery charger control module, A/C compressor, battery energy control module, fuel pump control module and the transmission control module (TCM).

Conditions for Running the DTC

P15B9

- Hybrid powertrain control module 2 is awake.
- Vehicle power mode is Vehicle ON or Vehicle in Service Mode.
- System voltage greater than 10.25 V.

P15BA

- Hybrid powertrain control module 2 is awake.
- Vehicle power mode is Vehicle OFF.
- System voltage greater than 10.25 V.

P1A5E

- Hybrid powertrain control module 2 is awake.
- Vehicle power mode is Vehicle ON or Vehicle in Service Mode.
- Battery energy control module is awake.
- System voltage greater than 9 V.

P1A5F

- Hybrid powertrain control module 2 is awake.
- Vehicle power mode is Vehicle OFF.
- Battery energy control module is awake.
- System voltage greater than 9 V.

P1EF6

- Hybrid powertrain control module 2 is awake.
- System voltage between 9-16 V.
- Vehicle power mode is Vehicle ON or Vehicle in Service Mode.
- This DTC can only run when the output is activated.

P1EF7

- Hybrid powertrain control module 2 is awake.
- System voltage between 9-16 V.
- Vehicle power mode is Vehicle OFF.

P2534, P2535

- The hybrid powertrain control module 2 is awake.
- The engine is running.
- The TCM is communicating on the serial data circuits.

Conditions for Setting the DTC

P15B9

- Hybrid powertrain control module 2 is awake.
- Vehicle power mode is Vehicle ON or Vehicle in Service Mode.
- Hybrid powertrain control module 2 ignition input is active.
- A/C compressor ignition input is not active and not greater than 5 V.

P15BA

- Hybrid powertrain control module 2 is awake.
- Vehicle power mode is Vehicle OFF.
- Hybrid powertrain control module 2 ignition input is not active.
- A/C compressor ignition input is active and not below 5 V.

P1A5E

- Hybrid powertrain control module 2 is awake.
- Ignition input is active and not above 5 V.

P1A5F

- Hybrid powertrain control module 2 is awake.
- Ignition input is not active and not below 5 V.

P1EF6

- Hybrid powertrain control module 2 is awake.
- Ignition output is active and a short-cricuit to earth is detected 3 consecutive times.
- Ignition output is not active and an open-circuit is detected 20 consecutive times.

P1EF7

- Hybrid powertrain control module 2 is awake.
- Ignition output is not active and a short-circuit to battery is detected 3 consecutive times.

P2534, P2535

- The hybrid powertrain control module 2 is awake.
- The fuel pump control module detects that the ignition voltage is less than 6 V.
- The TCM detects less than 2 V on the ignition voltage circuit at the TCM for greater than 10 seconds.

Action Taken When the DTC Sets

P15B9, P15BA

DTCs P15B9 and P15BA are type A DTCs.

P1A5E, P1A5F

DTCs P1A5E and P1A5F are type B DTCs.

P1EF6

- The ignition output is deactivated when a short-circuit to earth is detected. After 100 ms the output is activated again. This happens 3 times and then the output is deactivated until a new Vehicle ON or Vehicle in Service Mode request is received.
- Open: No action is taken.

P1EF7

No action is taken

P2534, P2535

- DTCs P2534 and P2535 are type A DTCs.
- The TCM turns off all solenoids.
- The TCM commands maximum line pressure.
- The TCM freezes transmission adaptive functions.

Conditions for Clearing the DTC

P15B9, P15BA, P2534 and P2535

DTCs P15B9, P15BA, P2534 and P2535 are type A DTCs.

P1A5E, P1A5F

DTCs P1A5E and P1A5F are type B DTCs.

P1EF6, P1EF7

- The current DTC will clear when the malfunction is no longer present during a DTC check.
- A history DTC clears when the module power mode cycle counter reaches the reset threshold of 40, without a repeat of the malfunction.

Diagnostic Aids

A short-circuit to voltage in the ignition circuit will keep the vehicle modules awake, which can drain the vehicle's battery.

Reference Information

Schematic Reference

Power Distribution Schematics

Connector End View Reference

Component Connector End Views

Description and Operation

Power Mode Description and Operation

Electrical Information Reference

- Circuit Testing
- Connector Repairs
- Testing for Intermittent Conditions and Poor Connections
- Wiring Repairs

DTC Type Reference

Powertrain Diagnostic Trouble Code (DTC) Type Definitions

Scan Tool Reference

Control Module References for scan tool information

Circuit/System Verification

1. Verify DTC B144B is not set.
   If the DTC is set, refer to DTC B144B .
2. Vehicle in Service Mode, verify that DTC P15B9, P15BA P1A5E, P1A5F, P1EF6, P1EF7, P2534, or P2535 is not set.
   If two or more DTCs are set, refer to Hybrid Powertrain Control Module 2 Circuit Malfunction.
   If only one DTC is set, refer to Non-Hybrid Powertrain Control Module 2 Control Module Circuit Malfunction.

Circuit/System Testing

Danger: Always perform the High-Voltage Disabling procedure prior to servicing any High-Voltage component or connection. Personal Protection Equipment (PPE) and proper procedures must be followed.

The High-Voltage Disabling procedure will perform the following tasks:

- Identify how to disable high-voltage.
- Identify how to test for the presence of high-voltage.
- Identify conditions under which high voltage is always present and personal protection equipment (PPE) and proper procedures must be followed.

Before working on any high-voltage system, be sure to wear the following Personal Protection Equipment:

- Safety glasses with appropriate side shields when within 15 metres (50 feet) of the vehicle, either indoors or outdoors.
- Certified and up-to-date Class "0" Insulation gloves rated at 1,000 V with leather protectors.
  - Visually and functionally inspect the gloves before use.
  - Wear the Insulation gloves with leather protectors at all times when working with the high-voltage battery assembly, whether the system is energised or not.

Failure to follow the procedures exactly as written may result in serious injury or death.

Danger: The Volt Battery Pack will utilise an exchange program. Please consult the most recent revision of bulletin/PI #PIP4841, available in Service Information (SI), for a list of approved Volt Battery Pack service procedures. Components that may be removed and serviced without exchanging the complete battery pack are identified in the bulletin/PI. Please contact the GM Technical Assistance Centre (1-877-446-8227) if you have any questions.

Hybrid Powertrain Control Module 2 Circuit Malfunction

1. Disconnect the X2 harness connector at the K114B Hybrid Powertrain Control Module 2.
2. Vehicle OFF, verify that a test lamp does not illuminate between the ignition circuit terminal 27 and earth.
   If the test lamp illuminates appears, test the ignition circuit for a short to voltage. If the circuit tests normal, refer to Power Mode Mismatch .
3. Vehicle in Service Mode, verify that a test lamp illuminates between the ignition circuit terminal 27 and earth.
   If the test lamp does not illuminate, test the ignition circuit for a short to ground or an open/high resistance. If the circuit tests normal, refer to Power Mode Mismatch .
4. If all circuits test normal, replace the K114B Hybrid Powertrain Control Module 2.

Non-Hybrid Powertrain Control Module 2 Control Module Circuit Malfunction

1. Perform the High-Voltage Disabling procedure before proceeding with this diagnostic. Refer to High Voltage Disabling .
2. Reconnect the 12 V battery.
3. Disconnect the harness connector at the appropriate control module.
4. Vehicle OFF, verify that a test lamp does not illuminate between the ignition circuit at the module and earth.
   If the test lamp illuminates appears, test the ignition circuit for a short to voltage. If the circuit tests normal, refer to Power Mode Mismatch .
5. Vehicle in Service Mode, verify that a test lamp illuminates between the ignition circuit at the module and earth.
   If the test lamp does not illuminate, test the ignition circuit for a short to ground or an open/high resistance. If the circuit tests normal, refer to Power Mode Mismatch .
6. If all circuits test normal, replace the control module.

Repair Instructions

Perform the Diagnostic Repair Verification after completing the repair.

Control Module References for the appropriate control module replacement, programming and set-up

&#169© Copyright Chevrolet. All rights reserved

DTC P1A60

Diagnostic Instructions

- Perform the Diagnostic System Check - Vehicle prior to using this diagnostic procedure.
- Review Strategy Based Diagnosis for an overview of the diagnostic approach.
- Diagnostic Procedure Instructions provides an overview of each diagnostic category.

DTC Descriptors

DTC P1A60: Battery Energy Control Module Ignition Accessory Switch Circuit Low Voltage

Diagnostic Fault Information

Circuit	Short to Ground	Open/High Resistance	Short to Voltage	Signal Performance
Serial Data Wake-Up	P1A60	P1A60	--	--

Circuit/System Description

The hybrid powertrain control module 2 sends the serial data wake-up power mode status in a serial data message to the battery energy control module. The hybrid powertrain control module 2 also powers up the serial data wake-up circuit to the battery energy control module when the vehicle power mode is Vehicle ON or Vehicle in Service Mode.

Conditions for Running the DTC

- Vehicle power mode is Vehicle ON or Vehicle in Service Mode
- Battery energy control module is awake
- System voltage greater than 9 V

Conditions for Setting the DTC

Ignition input is active, and 500 ms after the ignition input transitions high, a voltage below 5 V is detected 3 consecutive times

Action Taken When the DTC Sets

DTC P1A60 is a type B DTC.

Conditions for Clearing the DTC

DTC P1A60 is a type B DTC.

Diagnostic Aids

A short-circuit to voltage in the serial data wake-up circuit will keep the vehicle bus awake, which can drain the vehicle's battery.

Reference Information

Schematic Reference

Data Communication Schematics

Connector End View Reference

Component Connector End Views

Description and Operation

Power Mode Description and Operation

Electrical Information Reference

- Circuit Testing
- Connector Repairs
- Testing for Intermittent Conditions and Poor Connections
- Wiring Repairs

DTC Type Reference

Powertrain Diagnostic Trouble Code (DTC) Type Definitions

Scan Tool Reference

Control Module References for scan tool information

Circuit/System Testing

Danger: Always perform the High-Voltage Disabling procedure prior to servicing any High-Voltage component or connection. Personal Protection Equipment (PPE) and proper procedures must be followed.

The High-Voltage Disabling procedure will perform the following tasks:

- Identify how to disable high-voltage.
- Identify how to test for the presence of high-voltage.
- Identify conditions under which high voltage is always present and personal protection equipment (PPE) and proper procedures must be followed.

Before working on any high-voltage system, be sure to wear the following Personal Protection Equipment:

- Safety glasses with appropriate side shields when within 15 metres (50 feet) of the vehicle, either indoors or outdoors.
- Certified and up-to-date Class "0" Insulation gloves rated at 1,000 V with leather protectors.
  - Visually and functionally inspect the gloves before use.
  - Wear the Insulation gloves with leather protectors at all times when working with the high-voltage battery assembly, whether the system is energised or not.

Failure to follow the procedures exactly as written may result in serious injury or death.

Danger: The Volt Battery Pack will utilise an exchange program. Please consult the most recent revision of bulletin/PI #PIP4841, available in Service Information (SI), for a list of approved Volt Battery Pack service procedures. Components that may be removed and serviced without exchanging the complete battery pack are identified in the bulletin/PI. Please contact the GM Technical Assistance Centre (1-877-446-8227) if you have any questions.

1. Perform the High-Voltage Disabling procedure before proceeding with this diagnostic. Refer to High Voltage Disabling .
2. Reconnect the 12 V battery.
3. Disconnect the X2 harness connector at the A4 hybrid battery pack.
4. Vehicle OFF, verify that a test lamp does not illuminate between the serial data wake-up circuit terminal 3 and earth.
   If the test lamp illuminates, test the serial data wake-up circuit for a short-circuit to earth. If the circuit tests normal, replace the K114B hybrid powertrain control module 2.
5. Vehicle in Service Mode, verify that a test lamp illuminates between the serial data wake-up circuit terminal 3 and earth.
   If the test lamp does not illuminate, test the serial data wake-up circuit for a short-circuit to earth or an open-circuit/high resistance. If the circuit tests normal, replace the K114B hybrid powertrain control module 2.
6. If all circuits test normal, replace the K16 battery energy control module.

Repair Instructions

Perform the Diagnostic Repair Verification after completing the diagnostic repair.

Control Module References for the appropriate control module replacement, programming and set-up

&#169© Copyright Chevrolet. All rights reserved

Symptoms - Wiring Systems

Note: The following steps must be completed before using the symptom tables.

1. Perform the Diagnostic System Check - Vehicle before using the symptom tables in order to verify that all of the following are true:
   - There are no DTCs set.
   - The control modules can communicate via the serial data links.
2. Review the system operation in order to familiarize yourself with the system functions. Refer to:
   - Power Mode Description and Operation
   - Retained Accessory Power Description and Operation

Visual/Physical Inspection

- Inspect for aftermarket devices which could affect the operation of the systems. Refer to Checking Aftermarket Accessories .
- Inspect the easily accessible or visible system components for obvious damage or conditions which could cause the symptom.

Intermittent

Faulty electrical connections or wiring may be the cause of intermittent conditions. Refer to Testing for Intermittent Conditions and Poor Connections .

Symptom List

Refer to a symptom diagnostic procedure from the following list in order to diagnose the symptom:

- Power Mode Mismatch
- Retained Accessory Power Malfunction

&#169© Copyright Chevrolet. All rights reserved

Power Mode Mismatch

Diagnostic Instructions

- Perform the Diagnostic System Check - Vehicle prior to using this diagnostic procedure.
- Review Strategy Based Diagnosis for an overview of the diagnostic approach.
- Diagnostic Procedure Instructions provides an overview of each diagnostic category.

Circuit/System Description

The body control module (BCM) controls the ignition run relay through the control circuit by applying voltage to the ignition run relay coil control circuit. The ignition run relay is energised when the vehicle is in Service Mode, the vehicle is ON or when a remote start is requested. This is part of the BCM's primary function in controlling the vehicle power mode.

The keyless entry control module controls the back-up power for the ignition run relay through the control circuit by applying voltage to the ignition voltage circuit. This circuit is a pass-thru in the BCM and will energise the ignition circuit when the vehicle is in Service Mode, the vehicle is ON or when a remote start is requested.

Reference Information

Schematic Reference

- Power Distribution Schematics
- Power Moding Schematics

Connector End View Reference

Component Connector End Views

Description and Operation

Power Mode Description and Operation

Electrical Information Reference

- Circuit Testing
- Connector Repairs
- Testing for Intermittent Conditions and Poor Connections
- Wiring Repairs

Scan Tool Reference

Control Module References for scan tool information

Circuit/System Verification

Verify DTC B144B is not set.

If the DTC is set, refer to DTC B144B .

Circuit/System Testing

Danger: Always perform the High-Voltage Disabling procedure prior to servicing any High-Voltage component or connection. Personal Protection Equipment (PPE) and proper procedures must be followed.

The High-Voltage Disabling procedure will perform the following tasks:

- Identify how to disable high-voltage.
- Identify how to test for the presence of high-voltage.
- Identify conditions under which high voltage is always present and personal protection equipment (PPE) and proper procedures must be followed.

Before working on any high-voltage system, be sure to wear the following Personal Protection Equipment:

- Safety glasses with appropriate side shields when within 15 metres (50 feet) of the vehicle, either indoors or outdoors.
- Certified and up-to-date Class "0" Insulation gloves rated at 1,000 V with leather protectors.
  - Visually and functionally inspect the gloves before use.
  - Wear the Insulation gloves with leather protectors at all times when working with the high-voltage battery assembly, whether the system is energised or not.

Failure to follow the procedures exactly as written may result in serious injury or death.

Danger: The Volt Battery Pack will utilise an exchange program. Please consult the most recent revision of bulletin/PI #PIP4841, available in Service Information (SI), for a list of approved Volt Battery Pack service procedures. Components that may be removed and serviced without exchanging the complete battery pack are identified in the bulletin/PI. Please contact the GM Technical Assistance Centre (1-877-446-8227) if you have any questions.

1. Vehicle OFF, disconnect the KR74 ignition run relay.
2. Vehicle OFF and all vehicle systems OFF. It may take up to 2 minutes for all vehicle systems to power down. Test for less than 10 Ω between the ground circuit terminal

85 and ground.
If greater than the specified range, test the ground circuit for an open/high resistance.

3. Vehicle in Service Mode, verify that a test lamp illuminates between the relay B+ circuit terminal 30 and earth.
If the test lamp does not illuminate, test the B+ circuit for a short to ground or an open/high resistance.
4. Connect a test lamp between the control circuit terminal 86 and earth.
5. Cycle the power mode between Vehicle in Service Mode and Vehicle OFF. The test lamp should turn ON and OFF when changing S83 vehicle ON/OFF switch positions.
If the test lamp is always ON, test the control circuit for a short to voltage. If the circuit tests normal, replace the K9 body control module.
If the test lamp is always OFF, test the control circuit for a short to ground or open/high resistance. If the circuit tests normal, replace the K9 body control module.

Note: If you are working on a module that requires high-voltage disabling, perform steps 6 and 7.

6. Perform the High-Voltage Disabling procedure before proceeding with this diagnostic. Refer to High Voltage Disabling .
7. Reconnect the 12 V battery.
8. Disconnect the harness connector at the appropriate control module.
9. Vehicle OFF, verify that a test lamp does not illuminate between the ignition circuit at the module and earth.
If the test lamp does illuminate, test the ignition circuit for a short to voltage. If the circuit tests normal, test or replace the KR74 ignition run relay.
10. Vehicle in Service Mode, verify that a test lamp illuminates between the ignition circuit at the module and earth.
If the test lamp does not illuminate, test the ignition circuit for a short to ground or an open/high resistance. If the circuit tests normal, test or replace the KR74 ignition run relay.
11. If all circuits test normal, replace the control module.

Component Testing

1. Vehicle OFF, disconnect the KR74 ignition run relay.
2. Test for 70-150 Ω between terminals 85 and 86.
If the resistance is not within the specified range, replace the KR74 ignition run relay.
3. Test for infinite resistance between the following terminals:
- 30 and 86
- 30 and 87
- 30 and 85
- 85 and 87

If less than specified, replace the KR74 ignition run relay.
4. Install a 3 A fused jumper wire between relay terminal 86 and 12 V. Install a jumper wire between relay terminal 85 and earth. Measure for less than 5 Ω between terminals 87 and 30.
If greater than specified, replace the KR74 ignition run relay.

Repair Instructions

Perform the Diagnostic Repair Verification after completing the repair.

- Relay Replacement : Within an Electrical Center → Attached to Wire Harness
- Control Module References for the appropriate control module replacement, programming and set-up

&#169© Copyright Chevrolet. All rights reserved

Retained Accessory Power Malfunction

Diagnostic Instructions

- Perform the Diagnostic System Check - Vehicle prior to using this diagnostic procedure.
- Review Strategy Based Diagnosis for an overview of the diagnostic approach.
- Diagnostic Procedure Instructions provides an overview of each diagnostic category.

Diagnostic Fault Information

Circuit	Short to Ground	Open/High Resistance	Short to Voltage	Signal Performance
Relay Switch B+	1	1	--	--
Relay Coil Ignition	B1445 02	1	2	--
Relay Switch Control	1	1	2	--
Relay Coil Ground	--	1	--	--
Ground	--	1	--	--
1. Accessory Power Receptacle or Cigarette Lighter Malfunction 2. Accessory Power Receptacle or Cigarette Lighter Always ON				

Circuit/System Description

The retained accessory power (RAP) system allows specific vehicle functions to operate after the vehicle enters the Vehicle Off power mode for a predetermined time. Relay retained accessory power is controlled by the body control module (BCM) using inputs from the door ajar switches to determine control of the relay when the vehicle enters the Vehicle Off power mode. Radio retained accessory power is controlled by a serial data message from the BCM using inputs from the driver door open switch. Refer to Retained Accessory Power Description and Operation for more detail on subsystems using retained accessory power.

Diagnostic Aids

The radio retained accessory power mode is a separate function and will still operate properly. The radio retained accessory power function is controlled by serial data and the specific module. These functions are not affected by the BCM retained accessory power relay circuits.

Reference Information

Schematic Reference

- Power Distribution Schematics
- Power Moding Schematics

Connector End View Reference

Component Connector End Views

Description and Operation

Retained Accessory Power Description and Operation

Electrical Information Reference

- Circuit Testing
- Connector Repairs
- Testing for Intermittent Conditions and Poor Connections
- Wiring Repairs

Scan Tool Reference

Control Module References for scan tool information

Circuit/System Verification

Note: Battery voltage must remain above 9.6 V for retained accessory power to operate properly.

Radio Retained Accessory Power

1. Vehicle in Service Mode, observe the Driver's Door Ajar Switch scan tool parameter while opening and closing each vehicle door. The reading should change between Inactive/Active.
   If any parameter does not change as specified, refer to Door Ajar Indicator Malfunction .
2. If the door ajar operation is correct, and the radio is the only retained accessory power concern, replace the radio.

Relay Retained Accessory Power

1. Vehicle in Service Mode, observe the Driver's Door Ajar Switch scan tool parameter while opening and closing each vehicle door. The reading should change between Inactive/Active.
   If any parameter does not change as specified, refer to Door Ajar Indicator Malfunction .
2. Command the scan tool Accessory/Retained Accessory Power Relay Command OFF. Attempt to operate any retained accessory power relay controlled component within 5 seconds. The component should not operate.
3. Command the scan tool Accessory/Retained Accessory Power Relay Command ON. Attempt to operate any retained accessory power relay controlled component within 5 seconds. The component should operate.
4. Vehicle in Service Mode, all doors closed. Observe the scan tool parameter Accessory/Retained Accessory Power Relay Command. Vehicle Off, transmitter out of range, the reading should be Active for approximately 10 minutes then change to Inactive.
   If the parameter does not respond as specified, replace the K9 body control module.

Circuit/System Testing

Accessory Power Receptacle or Cigarette Lighter Malfunction

1. Vehicle OFF, disconnect the KR76 retained accessory power relay.
2. Test for less than 10 Ω between the ground circuit terminal 1 and earth.
   If greater than the specified range, test the ground circuit for an open/high resistance.
3. Verify that a test lamp does not illuminate between the control circuit terminal 2 and ground.
   If the test lamp illuminates, test the control circuit for a short to voltage.
4. Vehicle in Service Mode, verify that a test lamp illuminates between the ignition circuit terminal 2 and earth.
   If the test lamp does not illuminate, test the ignition circuit for a short to ground or an open/high resistance.
5. Verify that a test lamp illuminates between the B+ circuit terminal 5 and ground.
   If the test lamp does not illuminate, test the B+ circuit for a short to ground or an open/high resistance. If the circuit tests normal and the B+ circuit fuse is open, test the control circuit terminal 3 for a short to ground.
6. Disconnect the harness connector at the inoperative X80 accessory power receptacle or E32 cigarette lighter.
7. Test for less than 10 Ω between the ground circuit terminal C and ground.
   If greater than the specified range, test the ground circuit for an open/high resistance.
8. Connect the harness connector at the X80 accessory power receptacle or E32 cigarette lighter.
9. Connect a 20 A fused jumper wire between the KR76 Retained Accessory Power relay B+ circuit terminal 5 and the control circuit terminal 3. Verify that the accessory has power.
   If the accessory does not have power, test the control circuit for a short to ground or an open/high resistance. If the circuit tests normal, test or replace the appropriate X80 accessory power receptacle or E32 cigarette lighter.
10. If all circuits test normal, test or replace the KR76 retained accessory power relay.

Component Testing

Relay Test

1. Vehicle OFF, disconnect the KR76 retained accessory power relay.
2. Test for 60-180 Ω between terminals 85 and 86.
   If not within the specified range, replace the relay.
3. Test for infinite resistance between the following terminals:
   - 30 and 86
   - 30 and 87
   - 30 and 85
   - 85 and 87

   If not the specified value, replace the relay.
4. Install a 20 A fused jumper wire between relay terminal 85 and 12 V. Install a jumper wire between relay terminal 86 and ground. Test for less than 2 Ω between terminals 30 and 87.
   If greater than specified range, replace the relay.

Repair Instructions

Perform the Diagnostic Repair Verification after completing the repair.

- Accessory Power Receptacle Replacement
- Relay Replacement : Within an Electrical Center → Attached to Wire Harness
- Control Module References for the appropriate control module replacement, programming and set-up

&#169© Copyright Chevrolet. All rights reserved

Vehicle ON/OFF Switch Indicator Malfunction - DTC B097C

Diagnostic Instructions

- Perform the Diagnostic System Check - Vehicle prior to using this diagnostic procedure.
- Review Strategy Based Diagnosis for an overview of the diagnostic approach.
- Diagnostic Procedure Instructions provides an overview of each diagnostic category.

DTC Descriptors

DTC B097C 02: Power Mode Run/Crank Indicator Circuit Short-Circuit to Earth

Diagnostic Fault Information

Circuit	Short to Ground	Open/High Resistance	Short to Voltage	Signal Performance
Control	B097C 02	2	1	--
Ground	-	2	--	--
1. Vehicle ON/OFF switch indicator always on 2. Vehicle ON/OFF switch indicator inoperative				

Circuit/System Description

The vehicle ON/OFF switch has a single LED that indicates the vehicle power mode. When the vehicle is in the OFF mode, the LED is not illuminated. Pressing and holding the vehicle ON/OFF switch for five seconds, without the brake pedal applied, will enter the Vehicle Service Mode and the blue LED will illuminate. With the vehicle OFF and the brake pedal applied, pressing the vehicle ON/OFF switch once, the vehicle will enter the Vehicle ON mode and the blue LED will illuminate.

The vehicle ON/OFF switch contains two individual switches that provides redundant switch inputs to both the body control module (BCM) and the keyless entry control module. The BCM supplies the vehicle ON/OFF switch a constant B+ signal. The BCM monitors this signal to determine if the switch is released or pressed. When the vehicle ON/OFF switch is not pressed, voltage on the signal circuit is pulled down through two resistors in the switch. When the vehicle ON/OFF switch is pressed, voltage on the signal circuit is pulled down through only one resistor, changing the voltage seen at the BCM and indicating that the vehicle ON/OFF switch is pressed.

The keyless entry control module monitors voltage on the switch is the same manner as the BCM, but monitors the second switch located in the vehicle ON/OFF switch.

Conditions for Running the DTC

Control module voltage is 9-16 V

Conditions for Setting the DTC

- The BCM detects a short-circuit to earth in the control circuit.
- The above condition exists for more than 1 minute.

Action Taken When the DTC Sets

The BCM disables the control output.

Conditions for Clearing the DTC

- A current DTC clears when the malfunction is no longer present.
- A history DTC clears when the module power mode cycle counter reaches 40, without a repeat of the malfunction.

Reference Information

Schematic Reference

Power Moding Schematics

Connector End View Reference

Component Connector End Views

Description and Operation

Power Mode Description and Operation

Electrical Information Reference

- Circuit Testing
- Connector Repairs
- Testing for Intermittent Conditions and Poor Connections

- Wiring Repairs

Scan Tool Reference

Control Module References for scan tool information

Circuit/System Verification

With the brake pedal released, press and hold the vehicle ON/OFF switch for 5 seconds. The blue LED should illuminate and the vehicle should be in Service Mode.

Circuit/System Testing

1. Vehicle OFF, disconnect the harness connector at the S83 vehicle ON/OFF switch.
2. Vehicle OFF and all vehicle systems OFF. It may take up to 2 minutes for all vehicle systems to power down. Test for less than 10 Ω between the ground circuit terminal 4 and ground.
   If greater than specified range, test the ground circuit for an open/high resistance.
3. Test for less than 1 V between the control circuit terminal 5 and earth.
   If greater than the specified range, test the control circuit for a short to voltage. If the circuit tests normal, replace the K9 body control module.
4. Connect the harness connector at the S83 vehicle ON/OFF switch.
5. Vehicle in Service Mode, disconnect the harness connector at the S83 vehicle ON/OFF switch.
6. Verify a test lamp illuminates between the control circuit terminal 5 and earth.
   If the test lamp does not illuminate, test the control circuit for a short to ground or an open/high resistance. If the circuit tests normal, replace the K9 body control module.
7. If all circuits test normal, test or replace the S83 vehicle ON/OFF switch.

Component Testing

1. Vehicle OFF, disconnect the harness at the S83 vehicle ON/OFF switch.
2. Connect a jumper wire between the S83 vehicle ON/OFF switch terminal 4 and earth.
3. Connect a 3 A fused jumper wire between the S83 vehicle ON/OFF switch terminal 5 and B+. Verify that the blue LED illuminates.
   If the LED does not illuminate, replace the S83 vehicle ON/OFF switch.

Repair Instructions

Perform the Diagnostic Repair Verification after completing the repair.

- Ignition and Start Switch Replacement
- Control Module References for the BCM replacement, programming and set-up

&#169© Copyright Chevrolet. All rights reserved

Vehicle Will Not Change Power Mode - DTC B097B

Diagnostic Instructions

- Perform the Diagnostic System Check - Vehicle prior to using this diagnostic procedure.
- Review Strategy Based Diagnosis for an overview of the diagnostic approach.
- Diagnostic Procedure Instructions provides an overview of each diagnostic category.

DTC Descriptors

DTC B097B 00: Power Mode Start Switch Circuit Malfunction

DTC B097B 02: Power Mode Start Switch Circuit Short to Ground

DTC B097B 04: Power Mode Start Switch Circuit Open

DTC B097B 05: Power Mode Start Switch Circuit High Voltage/Open

DTC B097B 08: Power Mode Start Switch Circuit Performance - Signal Invalid

DTC B097B 61: Power Mode Start Switch Circuit Stuck

Diagnostic Fault Information

Circuit	Short to Ground	Open/High Resistance	Short to Voltage	Signal Performance
Signal - Terminal 3	B097B 02**	B097B 05**	B097B 05**	-
Signal - Terminal 6	B097B 02*	B097B 04*	B097B 04*	-
Low Reference	-	B097B 05**	--	--
Ground	--	B097B 04*	--	--

* DTC set in body control module

** DTC set in keyless entry control module

Circuit/System Description

The vehicle ON/OFF switch has a single LED that indicate the vehicle power mode. When the vehicle is in the off mode, the LED is not illuminated. Pressing and holding the vehicle ON/OFF switch for five seconds, without the brake pedal applied, will enter the Vehicle Service Mode and the blue LED will illuminate. With the vehicle OFF and the brake pedal applied, pressing the vehicle ON/OFF switch once, the vehicle will enter the Vehicle ON mode and the blue LED will illuminate.

The vehicle ON/OFF switch contains two individual switches that provides redundant switch inputs to both the body control module (BCM) and the keyless entry control module. The BCM supplies the vehicle ON/OFF switch a constant B+ signal. The BCM monitors this signal to determine if the switch is released or pressed. When the vehicle ON/OFF switch is not pressed, voltage on the signal circuit is pulled down through two resistors in the switch. When the vehicle ON/OFF switch is pressed, voltage on the signal circuit is pulled down through only one resistor, changing the voltage seen at the BCM and indicating that the vehicle ON/OFF switch is pressed.

The keyless entry control module monitors voltage on the switch is the same manner as the BCM, but monitors the second switch located in the vehicle ON/OFF switch.

Conditions for Running the DTC

Control module voltage is 9-16 V.

Conditions for Setting the DTC

B097B 00

- The voltage seen at the BCM monitored switch does not match the voltage seen at the keyless entry control module monitored switch.
- The above condition exists for more than 1 second

B097B 02

- The control module detects a short to earth in the vehicle ON/OFF switch signal circuit
- The above condition exists for more than 1 second

B097B 04

- The control module detects a open in the vehicle ON/OFF switch signal circuit
- The above condition exists for more than 1 second

B097B 05

- The control module detects an open in the vehicle ON/OFF switch signal circuit
- The above condition exists for more than 1 second

B097B 08

- The control module detects a change in the ignition mode without observing a switch press
- The above condition occurs 4 consecutive times

B097B 61

- The control module detects a continuously closed vehicle ON/OFF switch
- The above condition exists for more than 1 minute

Action Taken When the DTC Sets

No action is taken.

Conditions for Clearing the DTC

- A current DTC clears when the malfunction is no longer present.
- A history DTC clears after 40 consecutive module ignition cycles without a repeat of the malfunction.

Reference Information

Schematic Reference

Power Moding Schematics

Connector End View Reference

Component Connector End Views

Description and Operation

- Power Mode Description and Operation
- Keyless Entry System Description and Operation

Electrical Information Reference

- Circuit Testing
- Connector Repairs

- Testing for Intermittent Conditions and Poor Connections
- Wiring Repairs

Scan Tool Reference

Control Module References for scan tool information

Circuit/System Verification

1. Verify DTC B097B 08 or B097B 61 is not set.
   If either DTC is set, test or replace the S83 vehicle ON/OFF switch.
2. With the brake pedal released, press and hold the S83 vehicle ON/OFF switch for 5 seconds. The blue LED should illuminate and the vehicle should be in Service Mode.

Circuit/System Testing

1. Vehicle OFF, disconnect the harness connector at the S83 vehicle ON/OFF switch.
2. Test for less than 10 Ω between the ground circuit terminal 4 and ground.
   If greater than the specified range, test the ground circuit for an open/high resistance.
3. Vehicle OFF, test for less than 10 Ω between the low reference circuit terminal 7 and earth.
   If greater than specified range, test the low reference circuit for an open/high resistance. If the circuit tests normal, replace the K84 keyless entry control module.
4. Verify the scan tool BCM Push Button Ignition Switch Voltage parameter is greater than 11 V.
   If less than the specified range, test the signal circuit terminal 6 for a short to earth. If the circuit tests normal, replace the K9 body control module.
5. Install a 3 A fused jumper wire between the signal circuit terminal 6 and earth. Verify the scan tool BCM Push Button Ignition Switch Voltage parameter is less than 1 V.
   If greater than the specified range, test the signal circuit for a short to voltage or an open/high resistance. If the circuit tests normal, replace the K9 body control module.
6. Connect the harness connector at the S83 vehicle ON/OFF switch.
7. With the S83 vehicle ON/OFF switch released, verify the scan tool BCM Push Button Ignition Switch Voltage parameter is 8-10 V.
   If not within the specified range, test or replace the S83 vehicle ON/OFF switch.
8. With the S83 vehicle ON/OFF switch pressed, verify the scan tool BCM Push Button Ignition Switch Voltage parameter is 4-7 V.
   If not within the specified range, test or replace the S83 vehicle ON/OFF switch.
9. Disconnect the X1 harness connector at the K84 keyless entry control module.
10. Vehicle OFF, test for infinite resistance between the signal circuit terminal 11 and earth.
    If not the specified value, test the signal circuit for a short to earth.
11. Vehicle in Service Mode, test for less than 1 V between the signal circuit terminal 11 and earth.
    If greater than the specified range, test the signal circuit for a short to voltage.
12. With the S83 vehicle ON/OFF switch pressed, test for 4.5-5.5k Ω between the signal terminal 11 and the low reference terminal 12.
    If not within the specified range, test the signal circuit for an open/high resistance. If the circuit tests normal, test or replace the S83 vehicle ON/OFF switch.
13. With the S83 vehicle ON/OFF switch released, test for 1-1.5k Ω between the signal terminal 11 and the low reference terminal 12.

If not within the specified range, test or replace the S83 vehicle ON/OFF switch.

14. If all circuits test normal, test or replace the K84 keyless entry control module.

Component Testing

1. Vehicle OFF, disconnect the harness connector at the S83 vehicle ON/OFF switch.
2. With the S83 vehicle ON/OFF switch released, test for 4.5-5.5k Ω between the terminal listed below:
   - Signal terminal 4 and low reference terminal 6
   - Signal terminal 3 and low reference terminal 7

   If not within the specified range, replace the S83 vehicle ON/OFF switch.
3. With the S83 vehicle ON/OFF switch pressed, test for 1-1.5k Ω between the terminal listed below:
   - Signal terminal 4 and low reference terminal 6
   - Signal terminal 3 and low reference terminal 7

   If not within the specified range, replace the S83 vehicle ON/OFF switch.

Repair Instructions

Perform the Diagnostic Repair Verification after completing the repair.

- Ignition and Start Switch Replacement
- Control Module References for BCM or keyless entry control module replacement, programming, and setup

&#169© Copyright Chevrolet. All rights reserved

General Electrical Diagnosis

Basic Knowledge Required

Without a basic knowledge of electricity, it will be difficult to use the diagnostic procedures contained in the service manual. You should understand the basic theory of electricity, and know the meaning of voltage (V), current (A), and resistance (Ω). You should also be able to read and understand a wiring diagram, as well as understand what happens in a circuit with an open or a shorted wire.

&#169© Copyright Chevrolet. All rights reserved

Checking Aftermarket Accessories

Warning: Refer to SIR Warning in the Preface section.

Caution: The OBD II symbol is used on the circuit diagrams in order to alert the technician that the circuit is essential for proper OBD II emission control circuit operation. Any circuit which fails and causes the malfunction indicator lamp (MIL) to turn ON, or causes emissions-related component damage, is identified as an OBD II circuit.

Do not connect aftermarket accessories into the following circuits:

- SIR circuits, all such circuits are indicated on circuit diagrams with the SIR symbol.
- OBD II circuits, all such circuits are indicated on circuit diagrams with the OBD II symbol.

Always check for aftermarket accessories (non-OEM) as the first step in diagnosing electrical problems. If the vehicle is so equipped, disconnect the system to verify that these add-on accessories are not the cause of the problems.

Possible causes of vehicle problems related to aftermarket accessories include:

- Power feeds connected to points other than the battery
- Antenna location
- Transceiver wiring located too close to vehicle electronic modules or wiring
- Poor shielding or poor connectors on aerial feed line
- Check for recent service bulletins detailing installation guidelines for aftermarket accessories.

&#169© Copyright Chevrolet. All rights reserved

Circuit Testing

The Circuit Testing section contains the following diagnostic testing information. Using this information along with the diagnostic procedures will identify the cause of the electrical malfunction.

- Using Connector Test Adapters
- Probing Electrical Connectors
- Fault-finding with a Digital Multimeter
- Fault-finding with a Test Lamp
- Using Fused Jumper Wires
- Measuring Voltage
- Measuring Voltage Drop
- Measuring Frequency
- Testing Ground and Low Reference Circuits
- Testing for Continuity
- Testing for Short to Ground
- Testing for a Short to Voltage
- Testing for Intermittent Conditions and Poor Connections
- Inducing Intermittent Fault Conditions
- Testing for Electrical Intermittents
- Scan Tool Snapshot Procedure
- Circuit Protection - Fuses
- Circuit Protection - Circuit Breakers
- Circuit Protection - Fusible Links

&#169© Copyright Chevrolet. All rights reserved

Using Connector Test Adapters

Special Tools

EL-35616 Terminal Test Probe Kit

For equivalent regional tools, refer to Special Tools .

Danger: This procedure should not be performed on high-voltage circuits. Performing this procedure on high-voltage circuits may result in serious injury or death.

Caution: Do not insert test equipment probes (DMM etc.) into any connector or fuse block terminal. The diameter of the test probes will deform most terminals. A deformed terminal will cause a poor connection, which will result in a system failure. Always use the EL-38125-580 GM Approved Terminal Release Tool Kit in order to front probe terminals. Do not use paper clips or other substitutes to probe terminals.

When using the EL-38125-580 GM Approved Terminal Release Tool Kit , ensure the terminal test adapter choice is the correct size for the connector terminal. Do not visually choose the terminal test adapter because some connector terminal cavities may appear larger than the actual terminal in the cavity. Using a larger terminal test adapter will damage the terminal. Refer to the EL-38125-580 GM Approved Terminal Release Tool Kit label on the inside of the EL-38125-580 GM Approved Terminal Release Tool Kit for the correct adapter along with the connector end view for terminal size.

© Copyright Chevrolet. All rights reserved

Probing Electrical Connectors

Special Tools

EL-35616 Terminal Test Probe Kit

For equivalent regional tools, refer to Special Tools .

Danger: This procedure should not be performed on high-voltage circuits. Performing this procedure on high-voltage circuits may result in serious injury or death.

Note: Always be sure to reinstall the connector position assurance (CPA) and terminal position assurance (TPA) when reconnecting connectors or replacing terminals.

Front probe

Disconnect the connector and probe the terminals from the mating side (front) of the connector.

Caution: Refer to Test Probe Caution in the Preface section.

Note: When probing female 0.64 terminals, it is important to use the correct adapter. There have been some revisions to the test adapter for 0.64 terminals. The proper adapter for 0.64 terminals is the J-35616-64B which has a gold terminal and a black wire between the base and tip. Failure to use the proper test adapter may result in damage to the terminal being tested and improper diagnosis.

Note: The proper adapter for probing the terminals for fuses, relays, or diodes in an electrical centre is J-35616-35. Using any other tool or adapter may damage the terminal being tested.

Refer to the following table as a guide in selecting the correct test adapter for front probing connectors:

Test Adapter	Description
J-35616-2A	150 Male Probe Adapter (grey)
J-35616-3	150 Female Probe Adapter (grey)
J-35616-4A	280 Male Probe Adapter (purple)
J-35616-5	280 Female Probe Adapter (purple)
J-35616-6	100W Male (round) Probe Adapter (brown)
J-35616-7	100W Female (round) Probe Adapter (brown)

J-35616-8	Weather Pack Male Probe Adapter (orange)
J-35616-9	Weather Pack Female Probe Adapter (orange)
J-35616-10	100W Male (round) Probe Adapter (green)
J-35616-11	100W Female (round) Probe Adapter (green)
J-35616-12	130 Male Probe Adapter (blue)
J-35616-13	130 Female Probe Adapter (blue)
J-35616-14	150 Male Probe Adapter (green)
J-35616-16	100 Male Probe Adapter (lt green)
J-35616-17	100 Female Probe Adapter (lt green)
J-35616-18	220 Male Probe Adapter (black)
J-35616-19	220 Female Probe Adapter (black)
J-35616-21	950 Female Probe Adapter (red)
J-35616-22	950 Male Probe Adapter (red)
J-35616-31	500 Male Probe Adapter (orange)
J-35616-32	500 Female Probe Adapter (orange)
J-35616-33	160/180 Male Probe Adapter (yellow)
J-35616-34	160/180 Female Probe Adapter (yellow)
J-35616-35	280 Male Probe Adapter (violet)
J-35616-40	480 Male Probe Adapter (dk blue)
J-35616-41	480 Female Probe Adapter (dk blue)
J-35616-42	630 Male Probe Adapter (red)
J-35616-43	630 Female Probe Adapter (red)
J-35616-44	800 Male Probe Adapter (yellow)
J-35616-45	800 Female Probe Adapter (yellow)
J-35616-54	280 Male (round) Probe Adapter (tan)
J-35616-55	280 Female (round) Probe Adapter (tan)
J-35616-64B	0.64 Male Probe Adapter (lt blue)
J-35616-65B	0.64 Female Probe Adapter (lt blue)
J-35616-66	150 Male (round) Probe Adapter (yellow)
J-35616-67	150 Female (round) Probe Adapter (yellow)

Back probe

Note:

Back probe connector terminals only when specifically required in diagnostic procedures.

-
- Do not back probe a sealed (Weather Pack®) connector, less than a 280 series Metri-Pack connector, a Micro-Pack connector, or a flat wire connector.
- Back probing can be a source of damage to connector terminals. Use care in order to avoid deforming the terminal, either by forcing the test probe too far into the cavity or by using too large of a test probe.
- After back probing any connector, inspect for terminal damage. If terminal damage is suspected, test for proper terminal contact.

Do not disconnect the connector and probe the terminals from the harness side (back) of the connector.

&#169© Copyright Chevrolet. All rights reserved

Fault-finding with a Digital Multimeter

Special Tools

EL-39200 Digital Multimeter (DMM)

For equivalent regional tools, refer to Special Tools .

Danger: High-voltage circuits should only be tested using a digital multimeter (DMM) and test leads with at least a CAT III rating, such as the J 39200-A Digital Multimeter. Failure to follow the procedures exactly as written may result in serious injury or death.

Caution: Refer to Test Probe Caution in the Preface section.

Digital Multimeter (DMM) Basic Requirements

Service information is validated using digital multimeters that meet or exceed the following requirements. Using a multimeter that does not meet these basic requirements may give inaccurate readings which could lead to an incorrect diagnosis.

Display and Settings

1. Four digits displayed
2. Voltage, current, resistance, frequency, diode test settings, and min-max function
3. Display positive and negative values

Voltage

1. Have at least 10 MΩ input impedance
2. Test a DC voltage range of 0.1-1000 V.
3. Test an AC voltage range of 0.1-1000 V.

Current

1. Test a DC current range of 0.1[micro]A-10 A.
2. Test an AC current range of 0.1[micro]A-10 A.

Resistance

Test a resistance range of 0.1 Ω-40 MΩ and displays infinite for a value greater than 40 MΩ (O.L. (Over-load))

Frequency

Test for a frequency range of 0.5 HZ-199 K HZ

Diode Test

1. Apply at least 2 mA when performing the diode bias test
2. Display the break over voltage drop (0-3 V) of a forward biased diode
3. Display infinite (O.L. (Over-load)) when a diode is reverse biased

Min-Max Readings

1. Can update at a 25 ms sample rate
2. Saves and displays minimum and maximum values

Note: Circuits which include any solid state control modules, such as the engine control module (ECM), should only be tested with a 10 megohm or higher impedance digital multimeter such as the EL-39200.

The DMM instruction manual is a good source of information and should be read thoroughly upon receipt of the DMM as well as kept at hand for future reference.

A DMM should be used instead of a test lamp in order to test for voltage in high impedance circuits. While a test lamp shows whether voltage is present if the impedance is low enough, a DMM indicates how much voltage is present. In other words, if there is not enough current, the test lamp will not illuminate even though voltage is present.

The multimeter function on a DMM shows how much resistance exists between 2 points along a circuit. Low resistance in a circuit means good continuity.

Note: Disconnect the power feed from the suspect circuit when measuring resistance with a DMM. This prevents incorrect readings. DMMs apply such a small voltage to measure resistance that the presence of voltages can upset a resistance reading.

Diodes and solid state components in a circuit can cause a DMM to display a false reading. To find out if a component is affecting a measurement take a reading once, then reverse the leads and take a second reading. If the readings differ the solid state component is affecting the measurement.

Following are examples of the various methods of connecting the DMM to the circuit to be tested:

- Probe both ends of the connector and either hold the leads in place while manipulating the connector or tape the leads to the harness for continuous monitoring while you perform other operations or test driving. Refer to Probing Electrical Connectors .
- Disconnect the harness at both ends of the suspected circuit where it connects either to a component or to other harnesses.
- If the system that is being diagnosed has a specified pinout or breakout box, it may be used in order to simplify connecting the DMM to the circuit or for testing multiple

circuits quickly.

&#169© Copyright Chevrolet. All rights reserved

Fault-finding with a Test Lamp

Special Tools

EL-35616-200 Test Lamp – Probe Kit

For equivalent regional tools, refer to Special Tools .

Danger: This procedure should not be performed on high-voltage circuits. Performing this procedure on high-voltage circuits may result in serious injury or death.

Caution: Refer to Test Probe Caution in the Preface section.

A test lamp can simply and quickly test a low impedance circuit for voltage. A digital multimeter (DMM) should be used instead of a test lamp in order to test for voltage in high-impedance circuits. While a test lamp shows whether voltage is present if the impedance is low enough, a DMM indicates how much voltage is present. In other words, if there is not enough current, the test lamp will not illuminate even though voltage is present.

The *EL-35616-200* kit is Micro-Pack compatible and comprised of a 12 V light bulb with an attached pair of leads.

To properly operate this tool use the following procedures.

When testing for voltage:

1. Attach one lead to ground.
2. Touch the other lead to various points along the circuit where voltage should be present.
3. When the bulb illuminates, there is voltage at the point being tested.

When testing for ground:

1. Attach one lead to battery positive voltage.
2. Touch the other lead to various points along the circuit where ground should be present.
3. When the bulb illuminates, there is ground at the point being tested.

© Copyright Chevrolet. All rights reserved

Using Fused Jumper Wires

Special Tools

EL 35616-20F Fused Jumper Wire

For equivalent regional tools, refer to Special Tools .

Danger: This procedure should not be performed on high voltage circuits. Performing this procedure on high voltage circuits may result in serious injury or death.

Note: A fused jumper may not protect solid state components from being damaged.

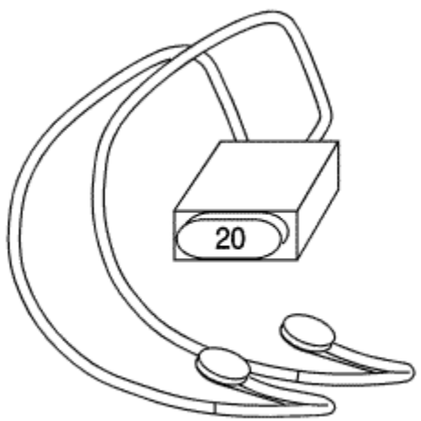

The *EL 35616-20F* Fused Jumper Wire includes banana jack connectors that provide adaptation to most connectors without damage. This fused jumper wire is supplied with a 20 A fuse which may not be suitable for some circuits. Do not use a fuse with a higher rating than the fuse that protects the circuit being tested.

© Copyright Chevrolet. All rights reserved

Measuring Voltage

Special Tools

EL-39200 Digital Multimeter (DMM)

For equivalent regional tools, refer to Special Tools .

Danger: Before working on any high- voltage system, be sure to wear the following Personal Protection Equipment:

- Safety glasses with appropriate side shields when within 50 feet of the vehicle, either indoors or outdoors
- Certified and up-to-date Class "0" Insulation gloves rated at 1,000 V with leather protectors
  - Visually and functionally inspect the gloves before use.
  - Wear the Insulation gloves at all times when working with the high- voltage battery assembly, whether the system is energised or not.

Failure to follow the procedure exactly as written may result in serious injury or death.

Caution: Refer to Test Probe Caution in the Preface section.

The following procedure measures the voltage at a selected point in a circuit.

1. Disconnect the electrical harness connector for the circuit being tested, if necessary.
2. Enable the circuit and/or system being tested. Use the following methods:
   - Vehicle power mode to Vehicle in Service Mode or Vehicle On.
   - Turn ON the circuit and/or system with a scan tool in Output Controls.
   - Turn ON the switch for the circuit and/or system being tested.
3. Select the V (AC) or V (DC) position on the digital multimeter (DMM).
4. Connect the positive lead of the DMM to the point of the circuit to be tested.
5. Connect the negative lead of the DMM to a good ground.
6. The DMM displays the voltage measured at that point.

&#169© Copyright Chevrolet. All rights reserved

Measuring Voltage Drop

Special Tools

EL-39200 Digital Multimeter (DMM)

For equivalent regional tools, refer to Special Tools .

Caution: Refer to Test Probe Caution in the Preface section.

The following procedure determines the difference in voltage potential between 2 points.

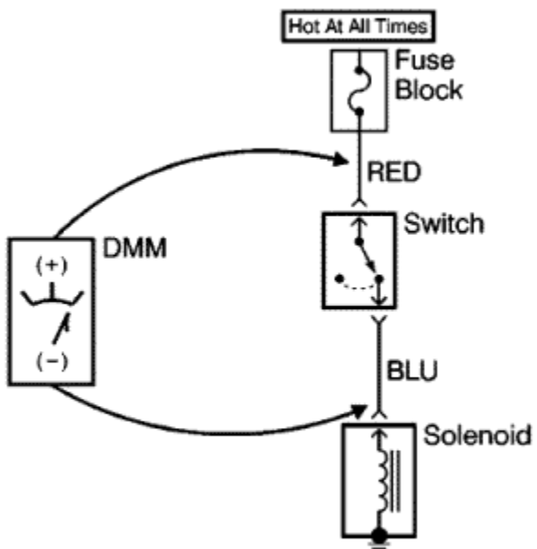

1. Set the Digital Multimeter (DMM) to the V (DC) position.

2. Connect the positive lead of the DMM to one point of the circuit to be tested.
3. Connect the negative lead of the DMM to the other point of the circuit.
4. Operate the circuit.
5. The DMM displays the difference in voltage between the 2 points.

© Copyright Chevrolet. All rights reserved

Measuring Frequency

Special Tools

EL-39200 Digital Multimeter (DMM)

For equivalent regional tools, refer to Special Tools .

Caution: Refer to Test Probe Caution in the Preface section.

The following procedure determines the frequency of a signal.

Note: Connecting the Digital Multimeter (DMM) to the circuit before pressing the Hz button will allow the DMM to autorange to an appropriate range.

1. Apply power to the circuit.
2. Set the DMM to the V (AC) position.
3. Connect the positive lead of the DMM to the circuit to be tested.
4. Connect the negative lead of the DMM to a good ground.
5. Set to Hz on the DMM.
6. The DMM will display the frequency measured.

© Copyright Chevrolet. All rights reserved

Testing Ground and Low Reference Circuits

Because a test lamp can light with up to 200 Ω in a ground or low reference circuit they are not recommended to be used for this type of test. A low impedance test lamp can light and indicate the circuit is good when there is as much as 20-30 Ω present, while a high impedance test lamp can light with up to 200 Ω present in the circuit. This is why the Digital Multi-Meter (DMM) is used when validating a ground or low reference circuit continuity.

When using the DMM there are many vehicle conditions that can affect the ground and low reference continuity testing. If these conditions are not met, a ground or low reference circuit test can fail on a good circuit. This may cause longer diagnosis time and incorrect component replacement.

Any current flow through a ground or low reference circuit, while being tested, will skew the DMM continuity reading, or display a reading higher than when there is no current flowing. Performing a ground or low reference circuit continuity test, in reference to the vehicles battery negative terminal, will have the highest risk of failing a good ground or low reference circuit test than any other ground reference point. The best ground test points would be a control module housing (if the control modules housing is metal and grounded), door jamb striker (if attached to metal), under dash metal frame work, engine block, or body ground studs (other than where the negative battery cable is attached).

A typical DMM earth or low-reference circuit continuity reading can be as high as 100 Ω with the vehicle power mode in Vehicle ON or Vehicle in Service Mode, and drop to 15-25 Ω after switching to Vehicle OFF. The reading will drop below 10 Ω after 30-40 seconds, then below 5 Ω after 60 seconds. Once the vehicle completely goes to sleep (generally 3-10 minutes) the reading will drop below 0.3 Ω.

The following list of conditions may need to be met to ensure a valid continuity reading on a ground or low reference circuit:

- Vehicle OFF
- Transmitter out of range of the vehicle
- Retained Accessory Power (RAP) OFF (open and close the driver door after Vehicle OFF)
- Battery charger set at a 2 A or less charge rate
- Scan tool not communicating with any vehicle control module (in some cases it may need to be disconnected from the DLC)
- All entry doors closed
- Headlamps OFF (auto headlamps disabled)
- Any delay lighting OFF
- HVAC after blow OFF
- Any accessory that can work when the vehicle power mode is Vehicle OFF
- Wait up to 60 seconds (after all other listed conditions are met)

Activating the DOOR LOCK function with a remote transmitter can greatly reduce the time to achieve a valid earth or low reference continuity test result.

&#169© Copyright Chevrolet. All rights reserved

Testing for Continuity

Special Tools

EL-39200 Digital Multimeter (DMM)

For equivalent regional tools, refer to Special Tools .

Danger: This procedure should not be performed on high-voltage circuits. Performing this procedure on high-voltage circuits may result in serious injury or death.

Caution: Refer to Test Probe Caution in the Preface section.

The following procedures verify good continuity in a circuit.

With a Digital Multimeter (DMM)

1. Set the DMM to the Ω position.
2. Disconnect the power feed (i.e. fuse, control module) from the suspect circuit.
3. Disconnect the load.
4. Select the MIN MAX function on the DMM.
5. Connect one lead of the DMM to one end of the circuit to be tested.
6. Connect the other lead of the DMM to the other end of the circuit.
7. If the DMM displays low or no resistance, the circuit has good continuity.

With a Test Lamp

Note: Only use the test lamp procedure on low impedance power and ground circuits.

1. Remove the power feed (i.e. fuse, control module) from the suspect circuit.
2. Disconnect the load.
3. Connect one lead of the test lamp to one end of the circuit to be tested.
4. Connect the other lead of the test lamp to battery positive voltage.
5. Connect the other end of the circuit to ground.
6. If the test lamp illuminates (full intensity), then the circuit has good continuity.

&#169© Copyright Chevrolet. All rights reserved

Testing for Short to Ground

Danger: This procedure should not be performed on high-voltage circuits. Performing this procedure on high-voltage circuits may result in serious injury or death.

Caution: Refer to Test Probe Caution in the Preface section.

The following procedures test for a short to ground in a circuit.

With a Digital Multimeter (DMM)

1. Remove the power feed (i.e. fuse, control module) from the suspect circuit.
2. Disconnect the load.
3. Set the rotary dial of the DMM to the Ω position.
4. Connect one lead of the DMM to one end of the circuit to be tested.
5. Connect the other lead of the DMM to a good ground.
6. If the DMM does NOT display infinite resistance (OL), there is a short to ground in the circuit.

With a Test Lamp

1. Remove the power feed (i.e. fuse, control module) from the suspect circuit.
2. Disconnect the load.
3. Connect one lead of the test lamp to battery positive voltage.
4. Connect the other lead of the test lamp to one end of the circuit to be tested.
5. If the test lamp illuminates, there is a short to ground in the circuit.

Fuse Powering Several Loads

1. Review the system schematic and locate the fuse that is open.
2. Open the first connector or switch leading from the fuse to each load.
3. Connect a DMM across the fuse terminals (be sure that the fuse is powered).
   - When the DMM displays voltage the short is in the wiring leading to the first connector or switch.
   - If the DMM does not display voltage refer to the next step.
4. Close each connector or switch until the DMM displays voltage in order to find which circuit is shorted.

&#169© Copyright Chevrolet. All rights reserved

Testing for a Short to Voltage

Special Tools

EL-39200 Digital Multimeter (DMM)

For equivalent regional tools, refer to Special Tools .

Danger: This procedure should not be performed on high-voltage circuits. Performing this procedure on high-voltage circuits may result in serious injury or death.

Caution: Refer to Test Probe Caution in the Preface section.

The following procedure tests for a short to voltage in a circuit.

1. Remove the power feed (i.e. fuse, control module) from the suspect circuit.
2. Disconnect the load.
3. Set the digital multimeter (DMM) to the V (DC) position.
4. Connect the positive lead of the DMM to one end of the circuit to be tested.
5. Connect the negative lead of the DMM to a good ground.
6. Switch the vehicle power mode to Vehicle in Service Mode and operate all accessories.
7. If the voltage measured is greater than 1 V, there is a short to voltage in the circuit.

© Copyright Chevrolet. All rights reserved

Testing for Intermittent Conditions and Poor Connections

Special Tools

EL-35616 Terminal Test Probe Kit

For equivalent regional tools, refer to Special Tools .

Danger: This procedure should not be performed on high-voltage circuits. Performing this procedure on high-voltage circuits may result in serious injury or death.

When the condition is not currently present, but is indicated in DTC history, the cause may be intermittent. An intermittent may also be the cause when there is a customer complaint, but the symptom cannot be duplicated. Refer to the Symptom Table of the system that is suspect of causing the condition before trying to locate an intermittent condition.

Most intermittent conditions are caused by faulty electrical connections or wiring. Inspect for the following items:

- Wiring broken inside the insulation
- Poor connection between the male and female terminal at a connector
- Poor terminal to wire connection--Some conditions which fall under this description are poor crimps, poor solder joints, crimping over the wire insulation rather than the wire itself, and corrosion in the wire to terminal contact area, etc.
- Pierced or damaged insulation can allow moisture to enter the wiring causing corrosion. The conductor can corrode inside the insulation, with little visible evidence. Look for swollen and stiff sections of wire in the suspect circuits.
- Wiring which has been pinched, cut, or its insulation rubbed through may cause an intermittent open or short as the bare area touches other wiring or parts of the vehicle.
- Wiring that comes in contact with hot or exhaust components
- Refer to Inducing Intermittent Fault Conditions in order to duplicate the conditions required, in order to verify the customer concern.
- Refer to Testing for Electrical Intermittents for test procedures to detect intermittent open, high resistance, short to ground, and short to voltage conditions.
- Refer to Scan Tool Snapshot Procedure for advanced intermittent diagnosis and Vehicle Data Recorder operation.

Testing for Terminal Fretting

Some intermittent conditions can be caused by wire terminal fretting corrosion. Fretting corrosion is a build-up of insulating, oxidised wear debris that can form when there is a small motion between electrical contacts. The oxidised wear debris can pile up enough at the electrical contact spots that the electrical resistance across the connection increases. Movement between the contacting surfaces as small as 10 to 100 microns can cause fretting. To put this in perspective, a sheet of paper is about 100 microns thick, so fretting motion is small and hard to see. Vibration and thermal expansion/contraction are the main sources that create fretting motion. Since vehicles vibrate and can

experience large temperature swings, they are a good source for fretting motion. Tin, copper, nickel, and iron surfaces are all susceptible to fretting corrosion. Fretting corrosion can be difficult to see but it looks like small, dark smudges on the terminals contact surface.

To correct a fretting condition disconnect the suspect connector and add Nyogel lubricant 760G (dielectric grease) to both sides of the connector terminals. Then reconnect the connector and wipe away any excess lubricant. This will correct the additional terminal contact resistance due to the terminal fretting corrosion.

Testing for Proper Terminal Contact

It is important to test terminal contact at the component and any inline connectors before replacing a suspect component. Mating terminals must be inspected to ensure good terminal contact. A poor connection between the male and female terminal at a connector may be the result of contamination or deformation.

Contamination may be caused by the connector halves being improperly connected. A missing or damaged connector seal, damage to the connector itself, or exposing the terminals to moisture and dirt can also cause contamination. Contamination, usually in the underhood or underbody connectors, leads to terminal corrosion, causing an open circuit or intermittently open circuit.

Deformation is caused by probing the mating side of a connector terminal without the proper adapter. Always use the *EL-35616* kit when probing connectors. Other causes of terminal deformation are improperly joining the connector halves, or repeatedly separating and joining the connector halves. Deformation, usually to the female terminal contact tab, can result in poor terminal contact causing an open or intermittently open circuit.

Testing for Proper Terminal Contact in Bussed Electrical Centres (BEC)

It is very important to use the correct test adapter when testing for proper terminal contact of fuses and relays in a bussed electrical centre (BEC). Use *EL-35616* kit to test for proper terminal contact. Failure to use *EL-35616* kit can result in improper diagnosis of the bussed electrical center.

Follow the procedure below in order to test terminal contact:

1. Separate the connector halves.
2. Visually inspect the connector halves for contamination. Contamination may result in a white or green build-up within the connector body or between terminals. This causes high terminal resistance, intermittent contact, or an open circuit. An underbonnet or underbody connector that shows signs of contamination should be replaced in its entirety: terminals, seals, and connector body.
3. Using an equivalent male terminal/terminated lead, verify that the retention force is significantly different between a known good terminal and the suspect terminal. Replace the female terminal in question.

Flat Wire Connectors

There are no serviceable parts for flat wire connectors on the harness side or the component side.

Follow the procedure below in order to test terminal contact:

1. Remove the component in question.
2. Visually inspect each side of the connector for signs of contamination. Avoid touching either side of the connector as oil from your skin may be a source of contamination as well.

3. Visually inspect the terminal bearing surfaces of the flat wire circuits for splits, cracks, or other imperfections that could cause poor terminal contact. Visually inspect the component side connector to ensure that all of the terminals are uniform and free of damage or deformation.
4. Insert the appropriate adapter from the on the flat wire harness connector in order to test the circuit in question.

Control Module/Component Voltage and Grounds

Poor voltage or ground connections can cause widely varying symptoms.

- Test all control module voltage supply circuits. Many vehicles have multiple circuits supplying voltage to a control module. Other components in the system may have separate voltage supply circuits that may also need to be tested. Inspect connections at the module/component connectors, fuses, and any intermediate connections between the voltage source and the module/component. A test lamp or a DMM may indicate that voltage is present, but neither tests the ability of the circuit to carry sufficient current. Operate the component to test the ability of the circuit to carry sufficient current. Refer to Circuit Testing and Power Distribution Schematics .
- Test all control module ground and system ground circuits. The control module may have multiple ground circuits. Other components in the system may have separate grounds that may also need to be tested. Inspect grounds for clean and tight connections at the grounding point. Inspect the connections at the component and in splice packs, where applicable. Operate the component to test the ability of the circuit to carry sufficient current. Refer to Circuit Testing and Ground Distribution Schematics .

Temperature Sensitivity

- An intermittent condition may occur when a component/connection reaches normal operating temperature. The condition may occur only when the component/connection is cold, or only when the component/connection is hot.
- Freeze Frame, Failure Records, Snapshot, or Vehicle Data Recorder data may help with this type of intermittent condition, where applicable.
- If the intermittent is related to heat, review the data for a relationship with the following:
  - High ambient temperatures
  - Underbonnet/engine generated heat
  - Circuit generated heat due to a poor connection, or high electrical load
  - Higher than normal load conditions, towing, etc.
- If the intermittent is related to cold, review the data for the following:
  - Low ambient temperatures--In extremely low temperatures, ice may form in a connection or component. Inspect for water intrusion.
  - The condition only occurs on a cold start.
  - The condition goes away when the vehicle warms up.
- Information from the customer may help to determine if the trouble follows a pattern that is temperature related.
- If temperature is suspected of causing an intermittent fault condition, attempt to duplicate the condition. Refer to Inducing Intermittent Fault Conditions in order to duplicate the conditions required.

Electromagnetic Interference and Electrical Noise

Some electrical components/circuits are sensitive to electromagnetic interference (EMI) or other types of electrical noise. Inspect for the following conditions:

- A mis-routed harness that is too close to high-voltage/high-current devices such as secondary ignition components, motors, generator, etc.--These components may induce electrical noise on a circuit that could interfere with normal circuit operation.
- Electrical system interference caused by a malfunctioning relay, or a control module driven solenoid or switch - These conditions can cause a sharp electrical surge. Normally, the condition will occur when the malfunctioning component is operating.
- Improper installation of non-factory or aftermarket add on accessories such as lights, 2-way radios, amplifiers, electric motors, remote starters, alarm systems, mobile phones, etc. - These accessories may create interference in other circuits while operating and the interference would disappear when the accessory is not operating. Refer to Checking Aftermarket Accessories .
- Test for an open diode across the A/C compressor clutch and for other open diodes. Some relays may contain a clamping diode.
- The generator may be allowing AC noise into the electrical system.

Incorrect Control Module

- There are only a few situations where reprogramming a control module is appropriate:
  - A new service control module is installed.
  - A control module from another vehicle is installed.
  - Revised software/calibration files have been released for this vehicle.

Note: DO NOT re-program the control module with the SAME software/calibration files that are already present in the control module. This is not an effective repair for any type of concern.

- Verify that the control module contains the correct software/calibration. If incorrect programming is found, reprogramme the control module with the most current software/calibration. Refer to Control Module References for replacement, setup, and programming.

&#169© Copyright Chevrolet. All rights reserved

Inducing Intermittent Fault Conditions

Special Tools

EL-25070 Heat Gun

For equivalent regional tools, refer to Special Tools .

Danger: Before working on any high voltage system, be sure to wear the following Personal Protection Equipment:

- Safety glasses with appropriate side shields when within 50 feet of the vehicle, either indoors or outdoors
- Certified and up-to-date Class "0" Insulation gloves rated at 1000V with leather protectors
  - Visually and functionally inspect the gloves before use.
  - Wear the Insulation gloves at all times when working with the high voltage battery assembly, whether the system is energised or not.

Failure to follow the procedure exactly as written may result in serious injury or death.

Many intermittent open or shorted circuits are affected by harness/connector movement that is caused by vibration, engine torque, bumps/rough pavement, etc. In order to duplicate the customer's concern, it may be necessary to manipulate the wiring harness if the malfunction appears to be vibration related. Manipulation of a circuit can consist of a wide variety of actions, including:

- Wiggling the harness
- Disconnecting a connector and reconnecting
- Stressing the mechanical connection of a connector
- Pulling on the harness or wire in order to identify a separation/break inside the insulation
- Relocating a harness or wires

All these actions should be performed with some goal in mind. For instance, with a scan tool connected, wiggling the wires may uncover a faulty input to the control module. The snapshot option would be appropriate here. Refer to Scan Tool Snapshot Procedure . Another option is, with the component commanded ON and OFF by the scan tool, to move related connectors and wiring and observe the component operation. With the engine running, move related connectors and wiring while monitoring engine operation. If harness or connector movement affects the data displayed, component/system operation, or engine operation, inspect and repair the harness/connections as necessary.

You may need to load the vehicle in order to duplicate the concern. This may require the use of weights, floor jacks, axle stands, frame machines, etc. In these cases you are attempting to duplicate the concern by manipulating the suspension or frame. This method is useful in finding harnesses that are too short and their connectors pull apart enough to cause a poor connection. A DMM set to the Min/Max mode and connected to the suspect circuit while testing can yield desirable results. Refer to Testing for Electrical Intermittents .

Certainly, using the senses of sight, smell, and hearing while manipulating the circuit can provide good results as well.

There may be instances where circuit manipulation alone will not meet the required criteria for the fault condition to appear. In such cases it may be necessary to expose the suspect circuit to other conditions while manipulating the harness. Such conditions would include high moisture conditions, along with exceptionally high or low temperatures. The following discusses how to expose the circuit to these kinds of conditions.

High Temperature Conditions

If the complaint tends to be heat-related, you can simulate the condition using the *EL-25070* heat gun .

Using the heat gun, you can heat up the suspected area or component. Manipulate the harnesses under high temperature conditions while monitoring the scan tool or DMM to locate the fault condition.

The high temperature condition may be achieved simply by test driving the vehicle at normal operating temperature. If a heat gun is unavailable, consider this option to enhance your diagnosis. This option does not allow for the same control, however.

Low Temperature Conditions

Depending on the nature of the fault condition, placing a fan in front of the vehicle while the vehicle is in the shade can have the desired effect.

If this is unsuccessful, use local cooling treatments such as ice or a venturi type nozzle (one that provides hot or cold air). This type of tool is capable of producing air stream temperatures down to –18°C (0°F) from one end and +71°C (160°F) from the other. This is ideally suited for localized cooling needs. In addition, circuit cooling spray can be used to cool down a component or circuit.

Once the vehicle, component, or harness has been sufficiently cooled, manipulate the harness or components in an effort to duplicate the concern.

Duplicating Failure Conditions

- If none of the previous tests are successful, attempt to duplicate and/or capture the failure conditions.
- Freeze Frame/Failure Records data, where applicable, contains the conditions that were present when the DTC set.
  1. Review and record Freeze Frame/Failure Records data.
  2. Clear the DTCs using the scan tool.
  3. Switch the vehicle power mode to Vehicle Off and wait 15 seconds.
  4. Operate the vehicle under the same conditions that were noted in Freeze Frame/Failure Records data, as closely as possible. The vehicle must also be operating within the Conditions for Running the DTC. Refer to Conditions for Running the DTC in the supporting text if a DTC is being diagnosed.
  5. Monitor DTC Status for the DTC being tested. The scan tool will indicate Ran, when the enabling conditions have been satisfied long enough for the DTC to run. The scan tool will also indicate whether the DTC passed or failed.
- An alternate method is to drive the vehicle with the DMM connected to a suspected circuit. An abnormal reading on the DMM when the concern occurs, may help you locate the concern.

&#169© Copyright Chevrolet. All rights reserved

Testing for Electrical Intermittents

Special Tools

EL-39200 Digital Multimeter (DMM)

For equivalent regional tools, refer to Special Tools .

Danger: This procedure should not be performed on high-voltage circuits. Performing this procedure on high-voltage circuits may result in serious injury or death.

Perform the following procedures while wiggling the harness from side to side. Continue this at convenient points (about 6 inches apart) while watching the test equipment.

- Testing for Short to Ground
- Testing for Continuity
- Testing for a Short to Voltage

If the fault is not identified, perform the procedure below using the MIN MAX feature on the *EL-39200* DMM . This feature allows you to manipulate the circuit without having to watch the DMM. The DMM will generate an audible tone when a change is detected.

Note: The DMM must be used to perform the following procedure since the DMM can monitor current, resistance or voltage while recording the minimum (MIN), and maximum (MAX) values measured.

1. Connect the DMM to both sides of a suspected connector (still connected), or from one end of a suspected circuit to the other. Refer to Fault-finding with a Digital Multimeter for information on connecting the DMM to the circuit.
2. Set the rotary dial of the DMM to the V (AC) or V (DC) position.
3. Press the range button of the DMM in order to select the desired voltage range.

   Note: The 100 ms RECORD mode is the length of time an input must stay at a new value in order to record the full change.

4. Select the MIN MAX function of the DMM. The DMM displays the 100 ms RECORD and emits an audible tone (beep).
5. Simulate the condition that is potentially causing the intermittent connection, either by wiggling the connections or the wiring, test driving, or performing other operations. Refer to Inducing Intermittent Fault Conditions .
6. Listen for the audible Min Max Alert which indicates that a new minimum or maximum value has been recorded.
7. Press the MIN MAX button until the MAX value is displayed and note the value.
8. Press the MIN MAX button until the MIN value is displayed and note the value.
9. Determine the difference between the MIN and MAX values.

- If the variation between the recorded MIN and MAX voltage values is 1 V or greater an intermittent open or high resistance condition exists. Repair the condition as necessary.
- If the variation between the recorded MIN and MAX voltage values is less than 1 V an intermittent open or high resistance condition does not exist.

&#169© Copyright Chevrolet. All rights reserved

Scan Tool Snapshot Procedure

Using Snapshots in Global Diagnostic System (GDS)

Overview

A snapshot is a recording of what a control module on the vehicle was receiving for information while the snapshot is being made. A snapshot may be used to analyse the data during the time a vehicle condition is current. This allows you to concentrate on making the condition occur, rather than trying to view all the data in anticipation of the fault. To record a snapshot in GDS, select, Record Snapshot, from the options at the top right portion of any of the various pages that allow snapshots to be taken (e.g. Data Display, Control Functions, etc.). When you are finished recording, select, Stop Snapshot recording. The snapshot will now be available for replay.

Snapshot Replay

The Snapshot Replay function allows reviews of previously recorded vehicle snapshot data. This information can be used in analysis of vehicle problems and detection of trigger error conditions. The graph function can be used to compare parameters to see if a component is functioning properly. Recorded snapshots can be selected for viewing by the following three methods:

- Selecting a snapshot file from the Vehicle Home Page and clicking on the Review selection.
- Double clicking on the selected snapshot from the Vehicle Home Page.
- Entering the Tools selection from the Menu selection and selecting Snapshot replay. Next, open the Snapshot Manager. Double click on the snapshot file you wish to view or click on the Load Snapshot selection and select a snapshot file.

Regardless of selection method, a File Loaded pop-up window will be displayed from the Snapshot Replay screen. Select OK from the pop-up window.

Snapshot Play Functions

There are several snapshot play functions that are used to replay recorded snapshots

- The Play function is used to play the snapshot forward by clicking on this selection. A marker will move across the screen when this selection is used. All selections in this area turn grey when they are active.
- The Pause function is used to pause play of the snapshot. When this selection is clicked a second time the snapshot will start playing where it left off.
- The Stop function is used to stop playing the snapshot. The snapshot will start from the beginning, if Play is selected after using the Stop function.

Time Control

Time control is used to control the snapshot replay. This function allows selection of a specific time frame, display of different views, and control of display speed. The following functions can be selected directly under Time Control.

- The Bookmark selection allows you to add a specific comment in the current display and return to this point in the future. When this option is selected, a pop-up window is displayed. Enter a bookmark name and select OK.
- The Note Pad can be selected to add comments to the snapshot replay file at the current point of time. When this option is selected, a pop-up window is displayed. Enter a comment for the snapshot file and select OK.
- The Load Snapshot (blue folder) opens a snapshot file and makes it ready for further analysis. This function is also available by clicking on an available snapshot file from the Snapshot Manager.
- The Down Arrow displays all Time Control options when selected. Individual options can also be selected by clicking on the item you want.
- The Snapshot Display Speed can be controlled by selecting this option. Slow speeds of 1/8X, 1/4X, and 1/2X can be selected. The real time speed can also be selected at 1. Faster speeds of 2X, 4X, and 8X can also be obtained by using this selection.

View Selections

Each View Selection provides a different way of displaying vehicle data for analysis. The following functions can be selected under Available Views:

Note: The parameter name will be shown in the original language used for capture if no translation is available for the name.

- Parameter List View -- Displays incoming information from the snapshot file. The current value of the parameters is displayed on the screen.
- Log View -- Contains all the information from the snapshot file. All parameter values are listed in the order they were recorded. Specific parameters can be added or removed from a watchlist by clicking on the appropriate item.
- State View -- Shows the values of all parameters in a specific time frame. These values can be used for comparison with the trigger view.
- Trigger View -- Displays all system and user defined triggers. This function can be used when there is a combination of factors involved in a diagnostic problem. When a Trigger condition is met a caution triangle will be displayed on the screen.

Triggers:

- Load Triggers -- Allows you to load a file containing trigger definitions.
- Save Triggers -- Allows you to save the trigger to your computer's hard drive.
- Remove Trigger -- Allows you to remove the current trigger. It will no longer be present.
- Edit Trigger -- Displays a pop-up window where you can modify the limits and parameters contained within a trigger.
- Adds Trigger -- Displays a pop-up window to configure a trigger.
- DTC View -- After the Play function is selected and this option is selected this function opens the list of recorded DTCs.
- Line Graph View -- Displays data that can be visualised against the time-axis. From this view, specific parameters can be selected for graphing by checking the box under Selected. At the bottom of the graph there are four functions Zoom In (increase size), Zoom Out (decrease size), Bookmarks, and Pause Scrolling. Each of these functions can be accessed by clicking on them.

&#169© Copyright Chevrolet. All rights reserved

Circuit Protection - Fuses

Special Tools

EL-39200 Digital Multimeter (DMM)

For equivalent regional tools, refer to Special Tools .

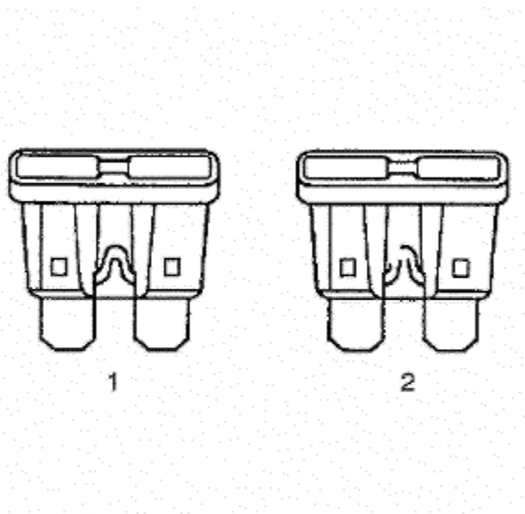

The fuse is the most common method of an automotive wiring circuit protection. Whenever there is an excessive amount of current flowing through a circuit the fusible element will melt and create an open or incomplete circuit. Fuses are a one time protection device and must be replaced each time the circuit is overloaded. To determine if a fuse is open, remove the suspected fuse and examine if the element in the fuse is broken (2). If not broken (1), also check for continuity using a Digital Multimeter (DMM) or a continuity tester. If the element is broken or continuity is suspect, replace the fuse with one of equal current rating.

Fuse Types

Current Rating Amperes	Colour
Auto Fuses, Mini Fuses	

2	Grey
3	Violet
5	Tan
7.5	Brown
10	Red
15	Blue
20	Yellow
25	White or Natural
30	Green
Maxi Fuses	
20	Yellow
30	Lamp Green
40	Orange or Amber
60	Blue
50	Red
J-Case Fuses	
20	Blue
30	Pink
40	Green
50	Red
60	Yellow
Midi Fuses	
80	Black
Mega Fuses	
100	Black
150	Black
200	Black

© Copyright Chevrolet. All rights reserved

Circuit Protection - Circuit Breakers

A circuit breaker is a protective device that is designed to open the circuit when a current load is in excess of the rated breaker capacity. If there is a short or other type of overload condition in the circuit, the excessive current will open the circuit between the circuit breaker terminals. Two types of circuit breakers are used.

Circuit Breaker: This type opens when excessive current passes through it for a period of time. It closes again after a few seconds, and if the cause of the high current is still present, it will open again. The circuit breaker will continue to cycle open and closed until the condition causing the high current is removed.

Positive Temperature Coefficient (PTC) Circuit Breaker: This type greatly increases its resistance when excessive current passes through it. The excessive current heats the PTC device, as the device heats its resistance increases. Eventually the resistance gets so high that the circuit is effectively open. Unlike the ordinary circuit breaker the PTC unit will not reset until the circuit is opened, by removing the voltage from its terminals. Once the voltage is removed the circuit breaker will re-close within a second or 2.

© Copyright Chevrolet. All rights reserved

Circuit Protection - Fusible Links

Special Tools

EL-39200 Digital Multimeter (DMM)

For equivalent regional tools, refer to Special Tools .

Note: When repairing a fusible link, fusible links cut longer than 225 mm (approximately 9 in) will not provide sufficient overload protection.

Fusible link is wire designed to melt and break continuity when excessive current is applied. It is often located between or near the battery and starter or electrical centre. Use a continuity tester or a Digital Multimeter (DMM) at each end of the wire containing the fusible link in order to determine if it is broken. If broken, it must be replaced with fusible link of the same gauge size.

© Copyright Chevrolet. All rights reserved

Wiring Harness Repair Astra-J, Insignia, Meriva-B and Movano-B

Please use the current wiring harness repair strategy for the Astra-J, Meriva-B and Insignia until the new global wiring harness repair strategy has been introduced. Use the same procedure as for the other Opel/Vauxhall carlines. This procedure is described in the general information for these carlines and in the paper manual "Wiring Harness Repair" (KTA-1950/2). In case of a warranty issue, the labour time can be found in the respective part of the table of content of the Astra-J, Meriva-B and Insignia Information in Tis2Web. The first list below shows the connectors that are used in the Astra-J of which repair is supported, together with the supplier part numbers, the concerned pigtail kit and the release tools that should be used for the concerned connector.The second list shows the connectors that are used in the Meriva-B of which repair is supported with the same information.The third list shows the connectors that are used in the Insignia of which repair is supported with the same information.For Movano-B the harness repair information is not yet available.

Go to Astra-J data | Go to Insignia data | Go to Meriva-B data | Go to Top

Available kits for Harness Repair Astra-J

Component Code	Connector	Component Name	Connector Code 1	Connector Code 2	Supplier Partno	Repair kit	Exception 1	Grommet release	Primary lock	Secondary lock
A22		Radio Controls	ZF 8-11	13235933	13235933	ZF 8-11	UAG or UFD	TBD	TBD	TBD
A22		Radio Controls	ZF 8-11	13235933	13235933	ZF 8-11	UDK or UDR	TBD	TBD	TBD
A23D		Door Latch Assembly - Driver	ZFW 10-5		24414904	ZFW 10-5		-	MKM 923-15	-
A23LR		Door Latch Assembly - Left Rear	ZFW 10-5		24414904	ZFW 10-5		-	MKM 923-15	-
A23P		Door Latch Assembly - Passenger	ZFW 10-5		24414904	ZFW 10-5		-	MKM 923-15	-
A23RR		Door Latch Assembly - Right Rear	ZFW 10-5		24414904	ZFW 10-5		-	MKM 923-15	-
A26		HVAC Control	F 6-26	88988120	24414934	F 6-26		-	MKM 923-1	MKM 923-1
A3L		Sunshade - Left	ZPF 2-50	90565971	90565971	ZPF 2-50		-	MKM 923-1	MKM 923-12A
A3R		Sunshade - Right	ZPF 2-50	90565971	90565971	ZPF 2-50		-	MKM 923-1	MKM 923-12A
A9A		Outside Rearview Mirror - Driver	F 9-34	90589960	90589960	F 9-34		-	MKM 923-1	MKM 923-2

A9B		Outside Rearview Mirror - Passenger	F 9-34	90589960	90589960	F 9-34		-	MKM 923-1	MKM 923-2
B1		A/C Refrigerant Pressure Sensor	ZFW 3-34		9133076	ZFW 3-34		MKM 923-2	MKM 923-2	MKM 923-2
B107		Accelerator Pedal Position Sensor	ZFW 6-16	88953419	9115133	ZFW 6-16		-	MKM 923-15	-
B108		Air Quality Sensor	ZFW 3-36		9133087	ZFW 3-36		-	MKM 923-8	MKM 923-8
B10B		Ambient Light/Sunload Sensor	F 6-18	24419225	24419225	F 6-18		-	MKM 923-5	MKM 923-8
B118B		Windshield Washer Fluid Level Switch	ZFW 2-146	13156102	13156102	ZFW 2-146		-	MKM 923-15	MKM 923-6
B16		Reverse Lamp Switch	ZFW 2-105	15336195	90565978	ZFW 2-105	without LDE	-	MKM 923-8	MKM 923-2
B160		Windscreen Temperature and Inside Moisture Sensor	F 6-18	24419225	24419225	F 6-18		-	MKM 923-5	MKM 923-8
B20		Brake Fluid Level Switch	ZFW 2-145	13156101	13156101	ZFW 2-145	LHD	-	MKM 923-15	-
B20		Brake Fluid Level Switch	ZFW 2-145	13156101	13156101	ZFW 2-145	RHD	-	MKM 923-15	-
B33		Engine Coolant Level Switch	ZFW 2-146	13156102	13156102	ZFW 2-146		-	MKM 923-15	MKM 923-6
B34		Engine Coolant Temperature Sensor	ZFW 2-85	24461693	24461693	ZFW 2-85	LSF	-	MKM 923-2	MKM 923-8
B51F		Headlamp Levelling Sensor - Front	ZFW 3-37	89046713	24418323	ZFW 3-37		-	MKM 923-4	-
B51R		Headlamp Levelling Sensor - Rear	ZFW 3-37	89046713	24418323	ZFW 3-37		-	MKM 923-4	-
B9		Ambient Air Temperature Sensor	ZFW 2-145	13156101	13156101	ZFW 2-145		-	MKM 923-15	-
E13L		Headlamp Assembly - Left	ZFW 10-4	88988927	9134900	ZFW 10-4		MKM 923-2	MKM 923-7	MKM 923-2
E13R		Headlamp Assembly - Right	ZFW 10-4	88988927	9134900	ZFW 10-4		MKM 923-2	MKM 923-7	MKM 923-2
E18	X1	Rear Defogger Grid X1	F 1-41	12052018	13129191	F 1-41		-	MKM 923-3	--
E18	X2	Rear Defogger Grid X2	F 1-41	12052018	13129191	F 1-41		-	MKM 923-3	--

E18	X3	Rear Defogger Grid X3	F 1-41	12052018	13129191	F 1-41		-	MKM 923-3	-
E29LF		Fog Lamp - Left Front	ZFW 2-92	15336116	90589518	ZFW 2-92		-	MKM 923-2	MKM 923-2
E29RF		Fog Lamp - Right Front	ZFW 2-92	15336116	90589518	ZFW 2-92		-	MKM 923-2	MKM 923-2
E40	X1	Electrical Auxiliary Heater X1	F 4-23		9130527	F 4-23		-	MKM 923-1	MKM 923-4
E40	X2	Electrical Auxiliary Heater X2	ZFW 2-130	24452452	24452452	ZFW 2-130		MKM 923-2	MKM 923-26	-
E43L		Tailgate Tail Lamp Assembly - Left	F 4-33	15324229	24466147	F 4-33		-	MKM 923-15	MKM 923-6
E43R		Tailgate Tail Lamp Assembly - Right	F 4-33	15324229	24466147	F 4-33		-	MKM 923-15	MKM 923-6
E6		Centre High Mounted Brake Lamp	F 2-48	19178146	24414864	F 2-48		-	MKM 923-18	MKM 923-15
E7L		Number Plate Lamp - Left	ZFW 2-146	13156102	13156102	ZFW 2-146	(&UD7/UD5&68/08)	-	MKM 923-15	MKM 923-6
E7L		Number Plate Lamp - Left	ZFW 2-146	13156102	13156102	ZFW 2-146	(&RC-UD7/UD5&68/08)	-	MKM 923-15	MKM 923-6
E7L		Number Plate Lamp - Left	ZFW 2-146	13156102	13156102	ZFW 2-146	(-RC&68/08)	-	MKM 923-15	MKM 923-6
E7R		Number Plate Lamp - Right	ZFW 2-146	13156102	13156102	ZFW 2-146	(&UD7/UD5&68/08)	-	MKM 923-15	MKM 923-6
E7R		Number Plate Lamp - Right	ZFW 2-146	13156102	13156102	ZFW 2-146	(&RC-UD7/UD5&68/08)	-	MKM 923-15	MKM 923-6
E7R		Number Plate Lamp - Right	ZFW 2-146	13156102	13156102	ZFW 2-146	(-RC&68/08)	-	MKM 923-15	MKM 923-6
G10		Cooling Fan Motor	ZFW 4-32	13161013	13161013	ZFW 4-32		-	MKM 923-3/8	-
K101	X2	Trailer Interface Control Module X2	F 3-27	13227253	13227253	F 3-27		-	MKM 923-15	-
K101	X1	Trailer Interface Control Module X1	ZF 18-11	13223363	13223363	ZF 18-11		-	MKM 923-8	MKM 923-2/27
K28	X2	Headlamp Levelling Control Module X2	F 6-16	90491162	90491162	F 6-16		-	MKM 923-4	MKM 923-4
K38		Ultrasonic Intrusion Sensor Module	F 6-18	24419225	24419225	F 6-18		-	MKM 923-5	MKM 923-8

K41	X1	Parking Assist Control Module X1	ZF 12-21	13235934	13235934	ZF 12-21		TBD	TBD	TBD
K41	X2	Parking Assist Control Module X2	ZF 8-11	13235933	13235933	ZF 8-11		TBD	TBD	TBD
K61		Sunroof Control Module	ZF 12-1	90221505	90221505	ZF 12-1		-	MKM 923-3	-
K65		Tire Pressure Indicator Module	ZFW 4-4	90484986	90484986	ZFW 4-4		-	MKM 923-12A	MKM 923-6
K77		Remote Control Door Lock Receiver	F 4-23		9130527	F 4-23		-	MKM 923-1	MKM 923-4
M27		Fuel Door Unlatch Actuator	ZFW 2-146	13156102	13156102	ZFW 2-146		-	MKM 923-15	MKM 923-6
M45		Rear Wiper Motor	F 3-20		90587331	F 3-20		-	MKM 923-8	MKM 923-10A
M72		Variable Power Steering Solenoid Valve	ZFW 2-146	13156102	13156102	ZFW 2-146	LHD	-	MKM 923-15	MKM 923-6
M72		Variable Power Steering Solenoid Valve	ZFW 2-146	13156102	13156102	ZFW 2-146	RHD	-	MKM 923-15	MKM 923-6
P16		Instrument Cluster	ZF 32-1	89047122	90587345	ZF 32-1		-	MKM 923-5	MKM 923-2
P25		Power Sounder	ZFW 4-4	90484986	90484986	ZFW 4-4		-	MKM 923-12A	MKM 923-6
R13		Radio Aerial Inductor	F 1-41	12052018	13129191	F 1-41		-	MKM 923-3	-
S109		Sport Mode Switch	F 6-26	88988120	24414934	F 6-26	URC	-	MKM 923-1	MKM 923-1
S26		Hazard Lamp Switch	ZF 12-21	13235934	13235934	ZF 12-21		TBD	TBD	TBD
S30		Headlamp Switch	ZF 12-21	13235934	13235934	ZF 12-21		TBD	TBD	TBD
S46		Liftgate Handle Switch	F 4-25	24414929	24414929	F 4-25		-	MKM 923-5	-
S79D		Window Switch - Driver	ZF 8-11	13235933	13235933	ZF 8-11		TBD	TBD	TBD
S79P		Window Switch - Passenger	ZF 12-21	13235934	13235934	ZF 12-21	AEF	TBD	TBD	TBD
T10E		Keyless Entry Aerial - Rear Compartment	F 4-25	24414929	24414929	F 4-25		-	MKM 923-5	-
T10G		Keyless Entry Aerial - Rear Fascia	ZFW 2-85	24461693	24461693	ZFW 2-85		-	MKM 923-2	MKM 923-8
		Keyless Entry Aerial - Centre								

T10J		Console Front	ZFW 2-85	24461693	24461693	ZFW 2-85		-	MKM 923-2	MKM 923-8
T10K		Keyless Entry Aerial - Centre Console Rear	ZFW 2-85	24461693	24461693	ZFW 2-85		-	MKM 923-2	MKM 923-8
X102		Cooling Fan Harness to Forward Lamp Harness	ZFW 4-32	13212505	13212505	ZFW 4-32	LLU with MH7, LBS or LBY	-	MKM 923-3/8	-
X102		Cooling Fan Harness to Forward Lamp Harness	ZFW 4-32	13161013	13161013	ZFW 4-32	LLU with MH7, LBS or LBY	-	MKM 923-3/8	-
X114		Power Steering Harness to Body Harness	ZFW 10-6	13147089	13147089	ZFW 10-6	NJ1 or NV7	-	MKM 923-15	-
X115		Forward Lamp Harness to Right Front Axle Harness	ZFW 10-6	13147089	13147089	ZFW 10-6	F45	-	MKM 923-15	-
X116		Forward Lamp Harness to Left Front Axle Harness	ZFW 10-6	13147089	13147089	ZFW 10-6	F45	-	MKM 923-15	-
X210		Headliner Harness to Body Harness	ZF 18-10	24444119	24444119	ZF 18-10		-	MKM 923-5	MKM 923-2
X211		Sunroof Harness to Body Harness	ZF 18-10	24444119	24444119	ZF 18-10	CF5	-	MKM 923-5	MKM 923-2
X402		Bumper Harness to Rear Body Harness	ZFW 12-6		13175535	ZFW 12-6	UD5 or UD7	-	MKM 923-2	MKM 923-2
X402		Bumper Harness to Rear Body Harness	ZMW 12-6	88986190	13175536	ZMW 12-6	UD5 or UD7	TBD	TBD	TBD
X410		Body Harness to Rear Body Harness	ZF 11-3		13143123	ZF 11-3	RC, UD7, UD5, 68, 08, D8G, VQ9 or UJN	-	MKM 923-15	MKM 923-6
X410		Body Harness to Rear Body Harness	ZM 11-3	24466144	24466144	ZM 11-3	RC, UD7, UD5, 68, 08, D8G, VQ9 or UJN	-	MKM 923-15	MKM 923-4

Go to Astra-J data
Go to Insignia data
Go to Meriva-B data
Go to Top

Available kits for Harness Repair Insignia

Component Code	Connector	Component Name	Connector Code 1	Connector Code 2	Supplier Partno	Repair kit	Exception 1	Grommet release	Primary lock	Secondary lock

A12	X1	Digital Radio Receiver Control Module	ZF 18-6	90506317	13597855	ZF 18-6		-	MKM 923-12A	MKM 923-2
A23C		Door Latch Assembly - Tailgate	F 4-33	24466147	15396705	F 4-33		-	MKM 923-15	MKM 923-6
A23D		Door Latch Assembly - Driver	ZFW 10-5	24414904	15327918	ZFW 10-5		-	MKM 923-15	-
A23LR		Door Latch Assembly - Left Rear	ZFW 10-5	24414904	15327918	ZFW 10-5		-	MKM 923-15	-
A23P		Door Latch Assembly - Passenger	ZFW 10-5	24414904	15327918	ZFW 10-5		-	MKM 923-15	-
A23RR		Door Latch Assembly - Right Rear	ZFW 10-5	24414904	15327918	ZFW 10-5		-	MKM 923-15	-
A26		HVAC Control	F 6-26	24414934	13597855	F 6-26		MKM 923-1	-	MKM 923-1
A3L		Sunshade - Left	ZPM 2-50	90565972	12047581	ZPM 2-50		-	MKM 923-4	MKM 923-10A
A3R		Sunshade - Right	ZPM 2-50	90565972	12047581	ZPM 2-50		-	MKM 923-4	MKM 923-10A
A9A		Outside Rearview Mirror - Driver	ZF 18-10	24444119	13597855	ZF 18-10		MKM 923-2	MKM 923-5	-
A9B		Outside Rearview Mirror - Passenger	ZF 18-10	24444119	13597855	ZF 18-10		MKM 923-2	MKM 923-5	-
B1		A/C Refrigerant Pressure Sensor	ZFW 3-34	9133076	15344324	ZFW 3-34		MKM 923-2	MKM 923-2	MKM 923-2
B107		Accelerator Pedal Position Sensor	ZFW 6-16	9115133	15344324	ZFW 6-16		-	MKM 923-15	-
B108		Air Quality Sensor	ZFW 3-36	9133087	15327918	ZFW 3-36		MKM 923-8	-	MKM 923-8
B10B		Light/Sunload Sensor - Ambient	F 6-18	24419225	15440179	F 6-18		MKM 923-8	-	MKM 923-5
B118B		Windshield Washer Fluid Level Switch	ZPF 2-3	90346580	15324973	ZPF 2-3		-	MKM 923-1	MKM 923-2
B160		Windscreen Temperature and Inside Moisture Sensor	F 6-18	24419225	15440179	F 6-18		MKM 923-8	-	MKM 923-5
B162LF		Vertical Body Acceleration Sensor - Left Front	ZFW 3-23	90563304		ZFW 3-23		-	MKM 923-9A	MKM 923-10A
B162R		Vertical Body Acceleration Sensor - Rear	ZFW 3-23	90563304		ZFW 3-23		-	MKM 923-9A	MKM 923-10A
B162RF		Vertical Body Acceleration Sensor - Right Front	ZFW 3-23	90563304		ZFW 3-23		-	MKM 923-9A	MKM 923-10A

B20		Brake Fluid Level Switch	ZFW 2-145	13156101	10779336	ZFW 2-145		--	--	MKM 923-15
B33		Engine Coolant Level Switch	ZFW 2-146	13156102	12184970	ZFW 2-146		MKM 923-6	MKM 923-15	-
B34B		Engine Coolant Temperature Sensor 2	ZFW 2-85	24461693	12186382	ZFW 2-85	LLU/LDE/2H0	-	MKM 923-2	MKM 923-8
B51F		Headlamp Levelling Sensor - Front	ZFW 3-37	24418323	15327918	ZFW 3-37		-	MKM 923-4	-
B51R		Headlamp Levelling Sensor - Rear	ZFW 3-37	24418323	15327918	ZFW 3-37		-	MKM 923-4	-
B74		Manifold Absolute Pressure Sensor	184032-1			184032-1	LDK	MKM 923-8	MKM 923-8	-
B80		Park Brake Switch	ZPF 1-50	90346065	15317877	ZPF 1-50		-	MKM 923-1/4	-
B9		Air Temperature Sensor - Ambient	ZFW 2-105	90565978	15324974	ZFW 2-105		-	MKM 923-8	MKM 923-2
E18	X1	Rear Demister Grid	F 1-41	13129191	15368546	F 1-41		-	MKM 923-3	--
E18	X2	Rear Demister Grid	F 1-41	13129191	15368546	F 1-41		-	MKM 923-3	--
E18	X3	Rear Demister Grid	F 1-41	13129191	15368546	F 1-41		-	MKM 923-3	--
E18	X4	Rear Demister Grid	F 1-41	13129191	15368546	F 1-41		-	MKM 923-3	-
E1A		Accent Lamp - Driver Seat	F 2-14	13252003	12124083	F 2-14		-	MKM 923-2	-
E1B		Accent Lamp - Passenger Seat	F 2-14	13252003	12124083	F 2-14		-	MKM 923-2	-
E1C		Accent Lamp - Driver Door Handle	F 2-14	13252003	12124083	F 2-14		-	MKM 923-2	-
E1D		Accent Lamp - Driver Door	F 2-48	24414864	15396704	F 2-48		-	MKM 923-18	MKM 923-15
E1J		Accent Lamp - Left Lower I/P	F 2-14	13252003	12124083	F 2-14		-	MKM 923-2	-
E1K		Accent Lamp - Right Lower I/P	F 2-14	13252003	12124083	F 2-14		-	MKM 923-2	-
E1M		Accent Lamp - Passenger Door Handle	F 2-14	13252003	12124083	F 2-14		-	MKM 923-2	-
E1P		Accent Lamp - Passenger Door	F 2-48	24414864	15396704	F 2-48		-	MKM 923-18	MKM 923-15
E27		Instrument Panel Compartment Lamp	F 2-14	13252003	12124083	F 2-14		-	MKM 923-2	-

E29LF		Fog Lamp - Left Front	ZFW 2-92	90589518	15324985	ZFW 2-92		-	MKM 923-2	MKM 923-2
E29RF		Fog Lamp - Right Front	ZFW 2-92	90589518	15324985	ZFW 2-92		-	MKM 923-2	MKM 923-2
E40	X1	Electrical Auxiliary Heater	F 4-23	9130527	15440179	F 4-23		-	MKM 923-1	MKM 923-4
E6		Centre High Mounted Brake Lamp	F 2-48	24414864	15396704	F 2-48	NB/HB	-	MKM 923-18	MKM 923-15
E6		Centre High Mounted Brake Lamp	ZFW 2-85	24461693	12186382	ZFW 2-85	KW	-	MKM 923-2	MKM 923-8
E7L		Number Plate Lamp - Left	ZFW 2-105	90565978	15324974	ZFW 2-105	NB/HB	-	MKM 923-8	MKM 923-2
E7R		Number Plate Lamp - Right	ZFW 2-105	90565978	15324974	ZFW 2-105	NB/HB	-	MKM 923-8	MKM 923-2
E8S		Rear Compartment Courtesy Lamp	F 2-14	13252003	12124083	F 2-14		-	MKM 923-2	-
G10		Cooling Fan Motor	ZFW 4-32	13161013	15327478	ZFW 4-32		-	MKM 923-3/8	-
G10L		Cooling Fan Motor - Left	ZFW 3-46	13147123	15324996	ZFW 3-46		-	MKM 923-4	-
G10R		Cooling Fan Motor - Right	ZFW 3-46	13147123	15324996	ZFW 3-46		-	MKM 923-4	-
K26	X2	Headlamp Control Module	F 6-16	90491162	12185046	F 6-16		-	MKM 923-4	MKM 923-4
K34	X2	Glow Plug Control Module	ZFW 6-30			ZFW 6-30		-	MKM 923-7	-
K38		Ultrasonic Intrusion Sensor Module	F 6-18	24419225	15440179	F 6-18		MKM 923-8	-	MKM 923-5
K47	X1	Rear Differential Clutch Control Module	ZFW 12-6	13175535	15366060	ZFW 12-6		-	MKM 923-2	MKM 923-2
K60		Steering Column Lock Control Module	ZF 8-8	24466119	12185039	ZF 8-8		-	MKM 923-15	-
K61		Sunroof Control Module	ZF 12-1	90221505	15409039	ZF 12-1		-	MKM 923-3	-
K62		Sunroof Sunshade Motor Module	ZF 12-1	90221505	15409039	ZF 12-1		-	MKM 923-3	-
K65		Tire Pressure Indicator Module	ZFW 4-4	90484986	15327918	ZFW 4-4		-	MKM 923-12A	MKM 923-6
K68	X1	Trailer Lighting Converter	ZF 18-11	13223363	13597855	ZF 18-11		-	MKM 923-8	MKM 923-2/27
K68	X2	Trailer Lighting Converter	F 3-27	13227253	15380838	F 3-27		-	MKM 923-15	-
K82	X1	Mobile Telephone Control Module	ZF 18-6	90506317	13597855	ZF 18-6		-	MKM 923-12A	MKM 923-2

K84		Remote Function Receiver Module	F 4-23	9130527	15440179	F 4-23		-	MKM 923-1	MKM 923-4
KR20L		Cooling Fan Speed Control 2 Relay	ZF 9-32	90491230	15344635	ZF 9-32		MKM 923-4/8	--	--
M27		Fuel Door Unlatch Actuator	ZFW 2-146	13156102	12184970	ZFW 2-146		MKM 923-6	MKM 923-15	-
M45		Rear Window Wiper Motor	F 3-20	90587331	12066214	F 3-20		-	MKM 923-8	MKM 923-10A
M72		Variable Power Steering Solenoid Valve	ZMW 2-31		15327860	ZMW 2-31		MKM 923-2	MKM 923-3	-
P16		Instrument Cluster	ZF 32-1	90587345	15440179	ZF 32-1		MKM 923-2	-	MKM 923-5
P25		Power Sounder	ZFW 4-4	90484986	15327918	ZFW 4-4		-	MKM 923-12A	MKM 923-6
P4		Alarm Siren	ZPF 2-4	90346067	15324985	ZPF 2-4		MKM 923-10A	-	MKM 923-4
Q46		Air Conditioning Compressor Valve	ZFW 2-48			ZFW 2-48	LCD/LBX/LBS	MKM 923-10A	MKM 923-1	-
S45B		Tailgate Control Switch - Interior	ZFW 4-4	90484986	15327918	ZFW 4-4		-	MKM 923-12A	MKM 923-6
S58A		Rear Compartment Lid Unlatch Switch - Exterior	F 4-25	24414929	12198039	F 4-25		-	MKM 923-5	-
T10E		Keyless Entry Aerial - Rear Compartment	F 4-25	24414929	12198039	F 4-25		-	MKM 923-5	-
T10G		Keyless Entry Aerial - Outside Rear	ZFW 2-85	24461693	12186382	ZFW 2-85		-	MKM 923-2	MKM 923-8
T10J		Keyless Entry Aerial - Centre Console Front	ZFW 2-85	24461693	12186382	ZFW 2-85		-	MKM 923-2	MKM 923-8
T10K		Keyless Entry Aerial - Centre Console Rear	ZFW 2-85	24461693	12186382	ZFW 2-85		-	MKM 923-2	MKM 923-8
X115		Body Harness / Forward Lamp Harness & Headlamp - Left Harness	ZFW 10-4	9134900	15339838	ZFW 10-4		MKM 923-2	MKM 923-7	MKM 923-2
X117		Body Harness / Forward Lamp Harness & Headlamp - Right Harness	ZFW 10-4	9134900	15339838	ZFW 10-4		MKM 923-2	MKM 923-7	MKM 923-2
X121		Body Harness / Forward Lamp Harness & Wheel Speed Sensor	ZFW 10-6	13147089	10779336	ZFW 10-6		-	MKM 923-15	-

		- Left Front Harness								
X126		Body Harness / Forward Lamp Harness & Wheel Speed Sensor - Right Front Harness	ZFW 10-6	13147089	10779336	ZFW 10-6		-	MKM 923-15	-
X130		Body Harness / Forward Lamp Harness & Engine Cooling Harness	ZFW 4-32	13161013	15327478	ZFW 4-32		-	MKM 923-3/8	-
X131		Body Harness / Forward Lamp Harness & Engine Cooling Harness	ZFW 2-130	24452452	15327788	ZFW 2-130		-	MKM 923-2	MKM 923-26
X131		Body Harness / Forward Lamp Harness & Engine Cooling Harness	ZMW 2-120	24413501	10846379	ZMW 2-120		-	MKM 923-2	-
X138		Body Harness & Battery	ZFW 2-24	90414685	15324994	ZFW 2-24		-	MKM 923-3	MKM 923-10A
X213		Instrument panel Harness & HVAC Harness	ZFW 2-130	24452452	15327788	ZFW 2-130		-	MKM 923-2	MKM 923-26
X322		Body Harness & Dome lamp Harness	ZF 18-10	24444119	13597855	ZF 18-10		MKM 923-2	MKM 923-5	-
X410		Body Harness / Body Rear Harness & Rear Panelling Harness	ZMW 16-6	13212499	15344938	ZMW 16-6		MKM 923-15	MKM 923-2	-
X435		Body Harness & Wheel Speed Sensors - Rear Harness	ZFW 12-6	13175535	15366060	ZFW 12-6		-	MKM 923-2	MKM 923-2
X81B	X1	Accessory Power Outlet - 120V / 230V AC	F 3-24	24427883	15327840	F 3-24		-	MKM 923-15	-
X900		Body Harness & Tailgate Harness	ZF 11-2	24432513	15380673	ZF 11-2		-	MKM 923-7/15	-
X901		Body Harness & Tailgate Extension - Left Harness	ZF 11-3	13143123	15380673	ZF 11-3		-	MKM 923-15	MKM 923-6
X901		Body Harness & Tailgate Extension - Left Harness	ZM 11-3	24466144	10756897	ZM 11-3		-	MKM 923-4	MKM 923-15
X906		Body Harness & Tailgate Extension - Right Harness	ZF 11-2	24432513	15380673	ZF 11-2		-	MKM 923-7/15	-
X91	X1	Phone Connector	ZF 12-20	13191578		ZF 12-20		-	MKM 923-12-	MKM 923-8

									A	
X911		Tailgate Extension - Left Harness & Tailgate Harness	ZF 11-3	13143123	15380673	ZF 11-3		-	MKM 923-15	MKM 923-6
X911		Tailgate Extension - Left Harness & Tailgate Harness	ZM 11-3	24466144	10756897	ZM 11-3		-	MKM 923-4	MKM 923-15
X916		Tailgate Extension - Right Harness & Tailgate Harness	ZF 11-2	24432513	15380673	ZF 11-2		-	MKM 923-7/15	-
X921		Tailgate Harness & Number Plate Lamps Harness	F 4-25	24414929	12198039	F 4-25		-	MKM 923-5	-

Go to Astra-J data | Go to Insignia data | Go to Meriva-B data | Go to Top

Available kits for Harness Repair Meriva-B

A3L		Sunshade - Left	ZPF 2-50	90565971	90565971	ZPF 2-50		-	MKM 923-1	MKM 923-12A
A3R		Sunshade - Right	ZPF 2-50	90565971	90565971	ZPF 2-50		-	MKM 923-1	MKM 923-12A
A7		Fuel Pump and Level Sensor Assembly	ZFW 6-33		13156390	ZFW 6-33	LDD, LUH or LUJ	-	MKM 923-15	-
A7		Fuel Pump and Level Sensor Assembly	ZFW 6-33		13156390	ZFW 6-33	LDV, LSF, LUB, LUD or LUE	-	MKM 923-15	-
A9A		Outside Rearview Mirror - Driver	ZPM 6-55		90347613	ZPM 6-55		-	MKM 923-4	MKM 923-8/12A
A9B		Outside Rearview Mirror - Passenger	ZPM 6-55		90347613	ZPM 6-55		-	MKM 923-4	MKM 923-8/12A
A12	X1	Digital Radio Receiver Control Module	ZF 18-6	90506317	90506317	ZF 18-6		-	MKM 923-12A	MKM 923-2
A22		Radio Controls	ZF 8-11	13235933	13235933	ZF 8-11		TBD	TBD	TBD
A23D		Door Latch Assembly - Driver	ZFW 10-5	24414904	24414904	ZFW 10-5		-	MKM 923-15	-
A23LR		Door Latch Assembly - Left Rear	ZFW 10-5	24414904	24414904	ZFW 10-5		-	MKM 923-15	-
A23RR		Door Latch Assembly - Right Rear	ZFW 10-5	24414904	24414904	ZFW 10-5		-	MKM 923-15	-

A26		HVAC Controls	F 6-26	88988120	24414934	F 6-26		MKM 923-1	-	MKM 923-1
B1		A/C Refrigerant Pressure Sensor	ZFW 3-34		9133076	ZFW 3-34		MKM 923-2	MKM 923-2	MKM 923-2
B5LF		Wheel Speed Sensor - Left Front	ZFW 2-85	24461693	24461693	ZFW 2-85		-	MKM 923-2	MKM 923-8
B5RF		Wheel Speed Sensor - Right Front	ZFW 2-85	24461693	24461693	ZFW 2-85		-	MKM 923-2	MKM 923-8
B5RR		Wheel Speed Sensor - Left Rear	ZFW 2-141		13125727	ZFW 2-141		TBD	TBD	TBD
B5RR		Wheel Speed Sensor - Right Rear	ZFW 2-141		13125727	ZFW 2-141		TBD	TBD	TBD
B9		Ambient Air Temperature Sensor	ZFW 2-121		24413625	ZFW 2-121		-	MKM 923-8	MKM 923-2
B10B		Ambient Light/Sunload Sensor	F 6-18	24419225	24419225	F 6-18		MKM 923-8	-	MKM 923-5
B16		Reverse Lamp Switch	ZFW 2-121		24413625	ZFW 2-121	LDV or LSF	-	MKM 923-8	MKM 923-2
B16		Reverse Lamp Switch	ZFW 2-105	15336195	90565978	ZFW 2-105	LDD, LUH, or LUJ	-	MKM 923-8	MKM 923-2
B20		Brake Fluid Level Switch	ZFW 2-105	15336195	90565978	ZFW 2-105		-	MKM 923-8	MKM 923-2
B34		Engine Coolant Temperature Sensor	ZFW 2-85	24461693	24461693	ZFW 2-85	LUB	-	MKM 923-2	MKM 923-8
B34A		Engine Coolant Temperature Sensor 1	ZFW 2-85	24461693	24461693	ZFW 2-85	LDD, LUH or LUJ	-	MKM 923-2	MKM 923-8
B34B		Engine Coolant Temperature Sensor 2	ZFW 2-85	24461693	24461693	ZFW 2-85	LDD, LUH or LUJ	-	MKM 923-2	MKM 923-8
B55		Bonnet Ajar Switch	ZFW 2-121		24413625	ZFW 2-121	UA6	-	MKM 923-8	MKM 923-2
B103		Stop Lamp Switch	F 4-25	24414929	24414929	F 4-25		-	MKM 923-5	-
B108		Air Quality Sensor	ZFW 3-36		9133087	ZFW 3-36		MKM 923-8	-	MKM 923-8
B119		Multi-axis Acceleration Sensor	ZFW 6-10		9130514	ZFW 6-10	FX3	-	MKM 923-8	MKM 923-8
E6		Centre High Mounted Brake Lamp	F 2-48	19178146	24414864	F 2-48		-	MKM 923-18	MKM 923-15
E8A		Door Sill Plate Lamp - Driver	F 3-24	24427883	24427883	F 3-24		-	MKM 923-15	-
E8B		Door Sill Plate Lamp - Passenger	F 3-24	24427883	24427883	F 3-24		-	MKM 923-15	-
E13L		Headlamp - Left	ZFW 16-1		90414958	ZFW 16-1	TVI	-	MKM 923-7	MKM 923-2
E13L		Headlamp - Left	ZFW 10-4	88988927	9134900	ZFW 10-4	without TVI	MKM 923-2	MKM 923-7	MKM 923-2
E13L		Headlamp - Right	ZFW 16-1		90414958	ZFW 16-1	TVI	-	MKM 923-7	MKM 923-2
							without			

E13R		Headlamp - Right	ZFW 10-4	88988927	9134900	ZFW 10-4	TVI	MKM 923-2	MKM 923-7	MKM 923-2
E18	X1	Rear Demister Grid	F 1-7		90492271	F 1-7		-	MKM 923-1	--
E18	X2	Rear Demister Grid	F 1-7		90492271	F 1-7		-	MKM 923-1	-
E29LF		Fog Lamp - Left Front	ZFW 2-92	15336116	90589518	ZFW 2-92	T96	-	MKM 923-2	MKM 923-2
E29RF		Fog Lamp - Right Front	ZFW 2-92	15336116	90589518	ZFW 2-92	T96	-	MKM 923-2	MKM 923-2
E37LR		Dome/Reading Lamps - Left Rear	ZPF 3-50	19178875	19178875	ZPF 3-50		-	MKM 923-1	MKM 923-10A
E37RR		Dome/Reading Lamps - Right Rear	ZPF 3-50	19178875	19178875	ZPF 3-50		-	MKM 923-1	MKM 923-10A
E38		Flood Lamp - Centre Console	F 2-55	13577518	13235945	F 2-55		-	MKM 923-12-A	MKM 923-8
E40	X1	HVAC Heater Element	F 4-23		9130527	F 4-23	C32	-	MKM 923-1	MKM 923-4
E40	X2	HVAC Heater Element	ZFW 2-130	24452452	24452452	ZFW 2-130	C32	MKM 923-2	MKM 923-26	-
G3		Air Suspension Compressor	ZF 3-2		13225877	ZF 3-2	WTS	-	MKM 923-8	-
G10		Cooling Fan Motor	ZFW 2-24	12147067	90414685	ZFW 2-24	A1 or A2	-	MKM 923-3	MKM 923-10A
G10		Cooling Fan Motor	ZFW 2-130	24452452	24452452	ZFW 2-130	B1, B2, B3or C2	MKM 923-2	MKM 923-26	-
G10L		Cooling Fan Motor - Left	ZFW 2-24	12147067	90414685	ZFW 2-24		-	MKM 923-3	MKM 923-10A
G10R		Cooling Fan Motor - Right	ZFW 2-24	12147067	90414685	ZFW 2-24		-	MKM 923-3	MKM 923-10A
K9	X2	Body Control Module	ZF 20-2		13212491	ZF 20-2		-	MKM 923-7	MKM 923-6/8/27
K9	X4	Body Control Module	ZF 32-5		13212497	ZF 32-5		-	MKM 923-7	MKM 923-2/6/27
K9	X5	Body Control Module	ZF 20-5		13241644	ZF 20-5		-	MKM 923-7/15	MKM 923-2
K9	X6	Body Control Module	ZF 1-2		13225902	ZF 1-2		-	MKM 923-2	MKM 923-2
K34	X2	Glow Plug Control Module	ZFW 6-30		13125598	ZFW 6-30	LDV or LSF	-	MKM 923-7	-
K62		Sunroof Sunshade Motor Module	ZF 12-1	90221505	90221505	ZF 12-1	CFD	-	MKM 923-3	-
K68	X1	Trailer Lighting Control Module	ZF 18-11	13223363	13223363	ZF 18-11	D8G	-	MKM 923-8	MKM 923-2/27

K68	X2	Trailer Lighting Control Module	F 3-27	13227253	13227253	F 3-27	D8G	-	MKM 923-15	-
K82	X1	Mobile Telephone Control Module	ZF 18-6	90506317	90506317	ZF 18-6	UPI, UPH, or UPJ	-	MKM 923-12A	MKM 923-2
K89		Immobiliser Control Module	F 2-55	13577518	13235945	F 2-55	LHD	-	MKM 923-12-A	MKM 923-8
KR20J		Cooling Fan Left High Speed Relay	ZF 9-32		90491230	ZF 9-32	LUB, LUD, or LUE	MKM 923-4/8	--	--
M27		Fuel Door Release Actuator	ZFW 2-146	13156102	13156102	ZFW 2-146		MKM 923-6	MKM 923-15	-
M42		Rear Compartment Lid Pulldown Actuator	F 4-33	15324229	24466147	F 4-33		-	MKM 923-15	MKM 923-6
M45		Rear Wiper Motor	F 3-24	24427883	24427883	F 3-24		-	MKM 923-15	-
P4		Security Siren	ZFW 2-91	90534687	90534687	ZFW 2-91	UA6	-	MKM 923-8	MKM 923-2
P12		Horn	ZFW 2-148		13216835	ZFW 2-148		TBD	TBD	TBD
P16		Instrument Cluster	ZF 32-1	89047122	90587345	ZF 32-1		MKM 923-2	-	MKM 923-5
Q2		A/C Compressor Clutch	ZFW 2-113		9134902	ZFW 2-113		-	MKM 923-1	MKM 923-10A
Q21		Intake Manifold Runner Control Solenoid Valve	ZFW 2-85	24461693	24461693	ZFW 2-85	LDD	-	MKM 923-2	MKM 923-8
Q21		Intake Manifold Runner Control Solenoid Valve	ZFW 2-85	24461693	24461693	ZFW 2-85	LDD	-	MKM 923-2	MKM 923-8
Q42		Turbocharger Wastegate Solenoid Valve	ZFW 2-132	24466116	24466116	ZFW 2-132	LDV or LSF	MKM 923-2	MKM 923-9A	MKM 923-2
Q42		Turbocharger Wastegate Solenoid Valve	ZFW 2-132	24466116	24466116	ZFW 2-132	LUB	MKM 923-2	MKM 923-9A	MKM 923-2
Q42	X1	Turbocharger Wastegate Solenoid Valve	ZFW 2-132	24466116	24466116	ZFW 2-132	LUD or LUE	MKM 923-2	MKM 923-9A	MKM 923-2
Q47		Exhaust Gas Recirculation Cooler Bypass Solenoid Valve	ZFW 2-132	24466116	24466116	ZFW 2-132	LUB	MKM 923-2	MKM 923-9A	MKM 923-2
Q57		Fuel Injector - Exhaust Manifold	ZFW 2-132	24466116	24466116	ZFW 2-132	LUB	MKM 923-2	MKM 923-9A	MKM 923-2
R10		Cooling Fan Resistor - Left	ZFW 2-24	12147067	90414685	ZFW 2-24		-	MKM 923-3	MKM 923-10A
R10		Cooling Fan Resistor - Right	ZFW 2-24	12147067	90414685	ZFW 2-24		-	MKM 923-3	MKM 923-10A

R10		Cooling Fan Resistor	ZFW 2-24	12147067	90414685	ZFW 2-24	A1	-	MKM 923-3	MKM 923-10A
R10		Cooling Fan Resistor	ZFW 3-46		13147123	ZFW 3-46	B1, B2, B3 or C2	-	MKM 923-4	-
S30		Headlamp Switch	ZF 12-21	13235934	13235934	ZF 12-21		TBD	TBD	TBD
S48A		Multi-Function Switch - Instrument Panel	ZF 12-13	24452449	24452449	ZF 12-13		-	MKM 923-5	MKM 923-2/16
S79D		Window Switch - Driver	ZF 8-11	13235933	13235933	ZF 8-11	A33	TBD	TBD	TBD
S79D		Window Switch - Driver	ZF 8-11	13235933	13235933	ZF 8-11	without A33	TBD	TBD	TBD
S79LR		Window Switch - Left Rear	ZF 8-11	13235933	13235933	ZF 8-11		TBD	TBD	TBD
S79P		Window Switch - Passenger	ZF 12-21	13235934	13235934	ZF 12-21	with A33	TBD	TBD	TBD
S79P		Window Switch - Passenger	ZF 12-21	13235934	13235934	ZF 12-21	without A33	TBD	TBD	TBD
S79RR		Window Switch - Right Rear	ZF 8-11	13235933	13235933	ZF 8-11	A33	TBD	TBD	TBD
X84		Data Link Connector	ZF 16-9		13101667	ZF 16-9		-	MKM 923-1	MKM 923-8
X122		X122 - Inline to the Blower Harness	ZFW 4-32	13161013	13161013	ZFW 4-32		-	MKM 923-3/8	-
X122		X122 - Inline to the Body Harness	ZFW 4-32	13212505	13212505	ZFW 4-32		-	MKM 923-3/8	-
X123		X123- Inline to the Engine Harness	ZFW 2-141		13125727	ZFW 2-141		TBD	TBD	TBD
X123		X123 - Inline to the Blower Harness	ZMW 2-31		13227212	ZMW 2-31		MKM 923-2	MKM 923-3	-
X124		X124 - Inline to the Blower Harness	ZMW 13-4		13146770	ZMW 13-4		-	MKM 923-3	-
X125		X125 - Inline to the Engine Harness	ZFW 8-3		9133086	ZFW 8-3		-	MKM 923-1	MKM 923-2
X126		X126 - Inline to the Forward Lamp Harness	ZMW 16-5		13212498	ZMW 16-5		-	MKM 923-7/15	-
X127		X127 - Inline to the Forward Lamp Harness	ZMW 6-26		24466129	ZMW 6-26	LDV or LSF	-	MKM 923-7	MKM 923-2
X128		X128 - Inline to the Forward Lamp Harness	ZMW 16-5		13212498	ZMW 16-5	LDV or LSF	-	MKM 923-7/15	-
X129		X129 - Inline to the Forward Lamp Harness	ZMW 16-5		13212498	ZMW 16-5	LUB	-	MKM 923-7/15	-
		X129 - Inline to the Forward Lamp					LUD or			

X129		Harness	ZMW 16-5		13212498	ZMW 16-5	LUE	-	MKM 923-7/15	-
X150		X150 - Inline to the Body Harness	ZFW 6-30		13125598	ZFW 6-30		-	MKM 923-7	-
X150		X150 - Inline to the Rear Wheel Speed Sensor Harness	ZMW 6-30		13125599	ZMW 6-30		-	MKM 923-15	MKM 923-4
X204		X204 - Inline to the Power Steering Harness	ZMW 5-6		24447096	ZMW 5-6		-	MKM 923-7	-
X400		X400 - Inline to the Right Rear Lamp Harness	F 4-33	15324229	24466147	F 4-33		-	MKM 923-15	MKM 923-6
X401		X401 - Inline to the Left Rear Lamp Harness	F 4-33	15324229	24466147	F 4-33		-	MKM 923-15	MKM 923-6
X402		X402 - Inline to the Right Rear Lamp Harness	F 4-33	15324229	24466147	F 4-33		-	MKM 923-15	MKM 923-6
X403		X403 - Inline to the Left Rear Lamp Harness	F 4-33	15324229	24466147	F 4-33		-	MKM 923-15	MKM 923-6
X485		X485 - Inline to the License Lamp Harness	F 4-25	24414929	24414929	F 4-25		-	MKM 923-5	-
X495		X495 - Inline to the Trailer Harness	ZM 12-10		9134907	ZM 12-10		-	MKM 923-7/15	MKM 923-8
X500		X500 - Inline to the Driver Door Harness (LHD) or Passenger Door Harness	ZFW 34-1		13184593	ZFW 34-1		MKM 923-2	MKM 923-3/15	MKM 923-2
X500		X500 - Inline to the Body Harness	ZMW 34-1		13184596	ZMW 34-1		-	MKM 923-15	MKM 923-2
X600		X600 - Inline to the Passenger Door Harness (LHD) or Driver Door Harness	ZFW 34-1		13184593	ZFW 34-1		MKM 923-2	MKM 923-3/15	MKM 923-2
X600		X600 - Inline to the Body Harness	ZMW 34-1		13184596	ZMW 34-1		-	MKM 923-15	MKM 923-2

Go to Astra-J data
Go to Insignia data
Go to Meriva-B data
Go to Top

Repairing Damaged Wire Insulation

Table 1: Wire Size Conversion

Danger: In order to reduce the risk of personal injury, loss of high-voltage isolation to earth and higher system impedance, do not attempt to repair any HV wiring, connector or terminal that is damaged. High-voltage coaxial type cables are not repairable. Never attempt to repair a coaxial type cable. The entire cable/harness or component must be replaced. In order to maintain system integrity and personal safety, never attempt to repair any high-voltage wiring, cables or terminals. Performing this procedure on high-voltage circuits may result in serious injury or death.

If the wire insulation has been chafed, or broken, enough to show the conductive portion of the wire, and the wire is not damaged, determine the length of insulation that needs to be repaired. If the repair is less than 280 mm (11 in), cut the wire within the damaged area. Then slide the appropriate heat shrink tubing (listed below) over the wire, and repair the wire by splicing the wires together. Refer to Splicing Copper Wire Using Splice Sleeves . Once the wire is spliced together slide heat shrink tubing over the damaged area and apply heat to seal the repaired wire.

If the wire is damaged, or the damaged area is larger than 280 mm (11 in), then replace the damaged wire by splicing in a new section of wire. Refer to Splicing Copper Wire Using Splice Sleeves .

GM Part Number	Diameter		Description	Colour	Length	
	Metric	English			Metric	English
12355003	9.5 mm	0.375 in	Tubing, Shrink 3/8	Black	305 mm	12 in
12355005	12.7 mm	0.5 in	Tubing, Shrink 1/2	Black	305 mm	12 in
12355011	19.1 mm	0.75 in	Tubing, Shrink 3/4	Black	305 mm	12 in
12355008	25.4 mm	1.0 in	Tubing, Shrink 1.00	Black	305 mm	12 in

Wire Size Conversion

Metric Wire Sizes (mm 2)	AWG Sizes
0.13	26
0.21	24
0.32	22
0.52	20
0.83	18

1.31	16
2.09	14
3.31	12
5.27	10
8.37	8
13.3	6
21.2	4
33.6	2
53.5	1/0

© Copyright Chevrolet. All rights reserved

Flat Wire Repairs

The flat wire within the flex wiring harness is not serviceable. If an open or short exists within the flex wiring harness the complete harness must be replaced.

© Copyright Chevrolet. All rights reserved

Folded-Over Wire Repair

Special Tools

EL-38125-10 Splice Sleeve Crimping Tool

For equivalent regional tools, refer to Special Tools .

Danger: In order to reduce the risk of personal injury, loss of high voltage isolation to ground and higher system impedance, do not attempt to repair any HV wiring, connector, or terminal that is damaged. High voltage coaxial type cables are not repairable. Never attempt to repair a coaxial type cable. The entire cable/harness or component must be replaced. In order to maintain system integrity and personal safety, never attempt to repair any high voltage wiring, cables, or terminals. Performing this procedure on high voltage circuits may result in serious injury or death.

The GM global wire repair strategy uses connector assemblies (pigtails) and terminated leads to repair wiring harnesses.

To reduce and manage GM Service Parts proliferation, the service pigtails and terminated leads are designed with the largest wire gauge size that can be held by either the terminal or the connector housing.

The folded over wire repair technique, in which the copper wire strands are folded over before being installed into a splice sleeve, allows the service part to be used when repairing a smaller gauge size wire in a vehicle. This technique has passed all GM testing standards.

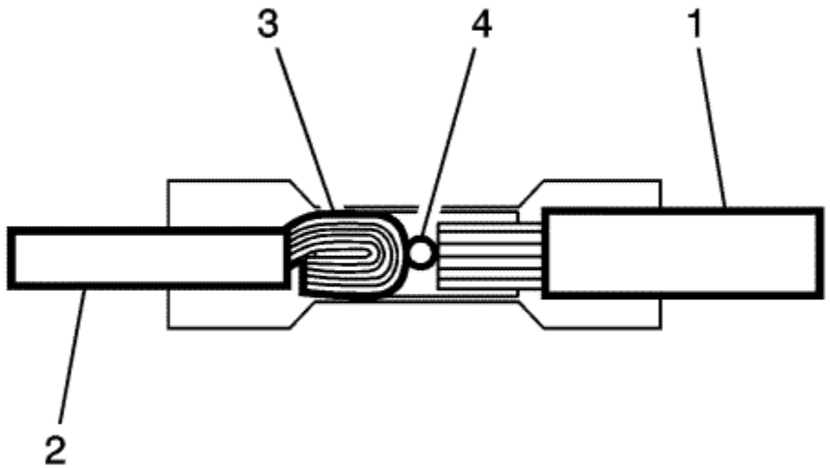

The larger harness size wires (1) will be placed in one side of the splice sleeve and match the splice sleeve closely in size. The wires are moved into the splice sleeve until they hit the stop (4) in the splice sleeve. The smaller harness size wires (2) will be placed in the other side of the splice sleeve. The smaller harness size wires will be folded over (3) to match up with the splice sleeve size.

Use the folded over wire repair for:

Note: Increasing the amount of copper strands in the smaller gauge size will allow for a better crimp

- Splicing wires of 0.35 mm or less (22, 24, 26 gauge sizes)

  Note: Vehicle side needs to be of same or less gauge size (not greater than the service part's gauge size)

- Splicing wires of different gauges

Use the Service Information (SI) connector end-views to determine:

- Gauge size of wiring harness

- Recommended Repair: Terminated Lead or Pigtail

The following table lists the acceptable variance within the gauge size

Folded-Over Wire Selection Table

Harness Wire Gauge		Connector Assembly (Pigtail) or Terminated Lead Wire Gauge Size			
-		Salmon Colour Splice Sleeve		Blue Colour Splice Sleeve	Yellow Colour Splice Sleeve
Metric	-	0.35 mm	0.5-0.8 mm	1.0-2.0 mm	3.0-5.0 mm
-	Wire Gauge (AWG)	22	20-18	16-14	12-10
0.13 mm	26	Fold Over Wire	Fold Over Wire	Fold Over Wire	Not Acceptable
0.22 mm	24	Fold Over Wire	Fold Over Wire	Fold Over Wire	Not Acceptable
0.35 mm	22	Fold Over Wire	Fold Over Wire	Fold Over Wire	Not Acceptable
0.5 mm	20	Not Acceptable	Wire to Wire	Fold Over Wire	Not Acceptable
0.75 mm	-	Not Acceptable	Wire to Wire	Fold Over Wire	Not Acceptable
0.8 mm	18	Not Acceptable	Wire to Wire	Fold Over Wire	Not Acceptable
1.0 mm	16	Not Acceptable	Wire to Wire	Fold Over Wire	Not Acceptable
1.5 mm	-	Not Acceptable	Not Acceptable	Wire to Wire	Fold Over Wire
2.0 mm	14	Not Acceptable	Not Acceptable	Wire to Wire	Fold Over Wire
2.5 mm	-	Not Acceptable	Not Acceptable	Wire to Wire	Fold Over Wire
3.0-5.0 mm	12-10	Not Acceptable	Not Acceptable	Not Acceptable	Wire to Wire

Example

For an IP Harness of 0.22 mm (24 gauge on left side of table) wire size, the SI connector end-view recommends a pigtail with leads of 0.8 mm (18 gauge on the top of the table) with a salmon coloured DuraSeal splice sleeve of 0.5-1.0 mm (20-16 gauge).

Follow these steps to use the folded over wire (1) technique on an IP Harness.

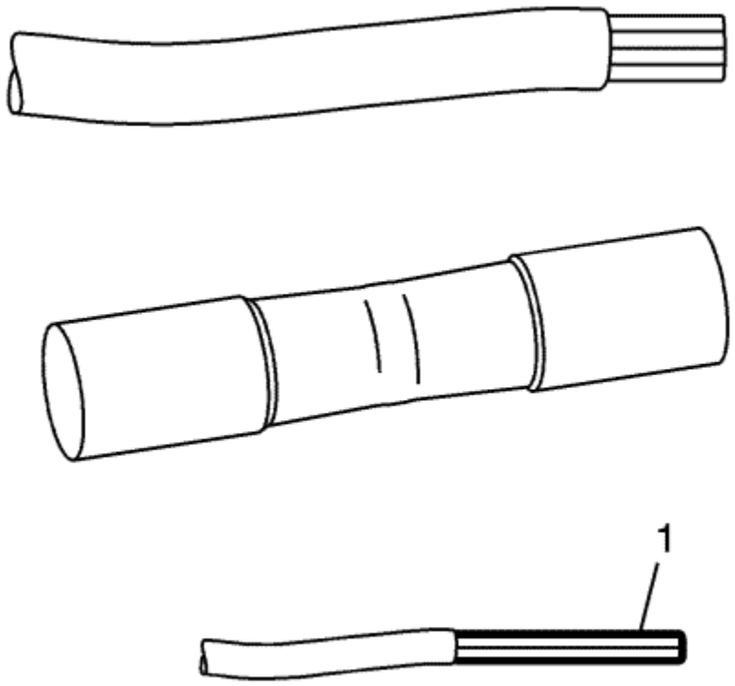

Strip twice the amount of insulation on the smaller (1) wire (IP Harness is the lower wire) than normally required. Normally, the terminated leads have 5 mm of insulation stripped off the wire.

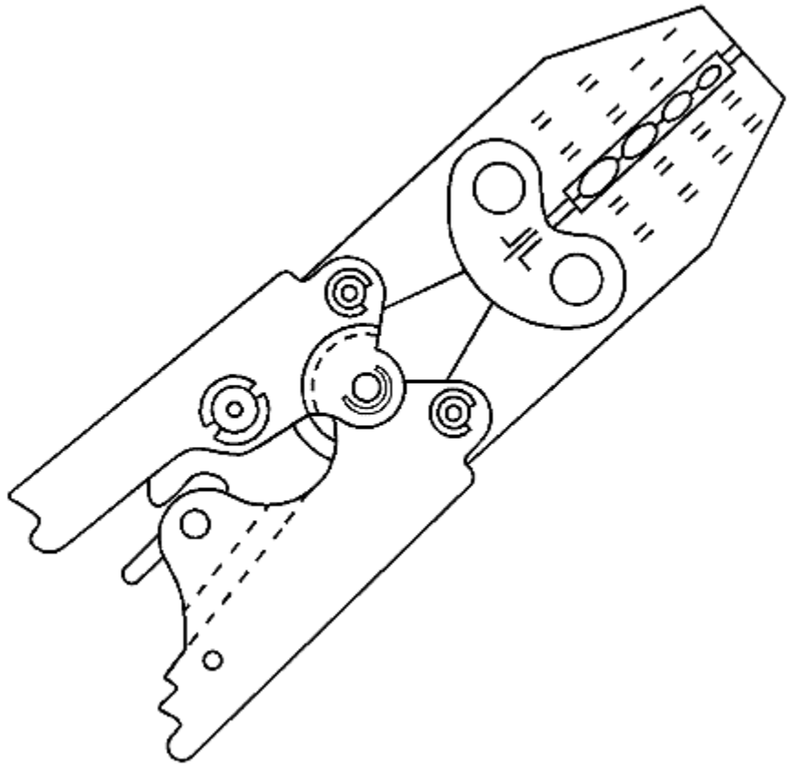

Note: Use *EL-38125-10* splice sleeve crimping tool .

1. For wiring repair, refer to Splicing Copper Wire Using Splice Sleeves .

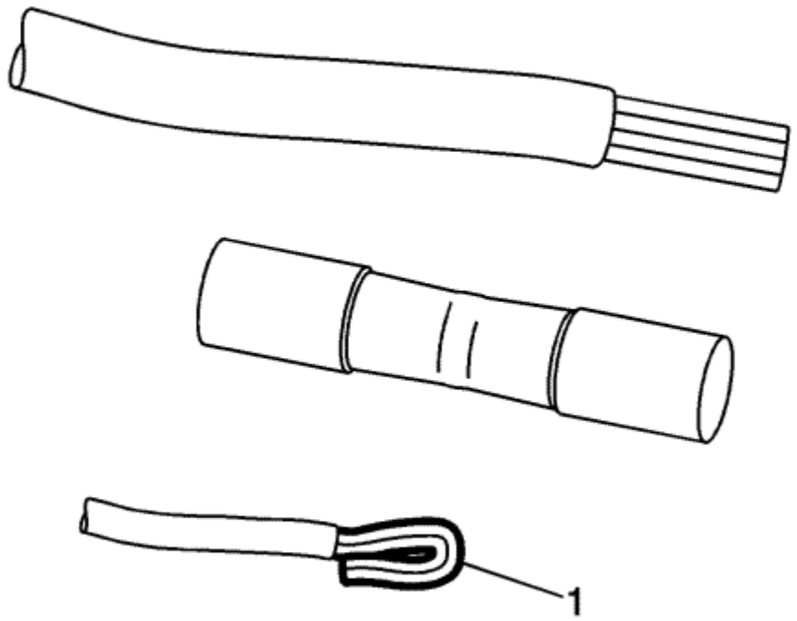

2. Twist the wires before you fold them over to prevent the wire strands from opening up. Fold over the copper wire strands of the smaller (1) gauge wire so that it is the same length as the non-folded wire.

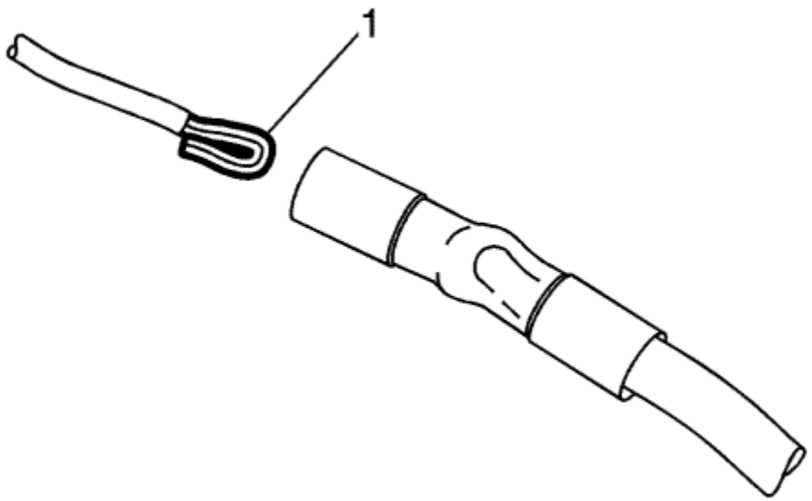

3. Insert the folded over wire (1) into the splice sleeve.

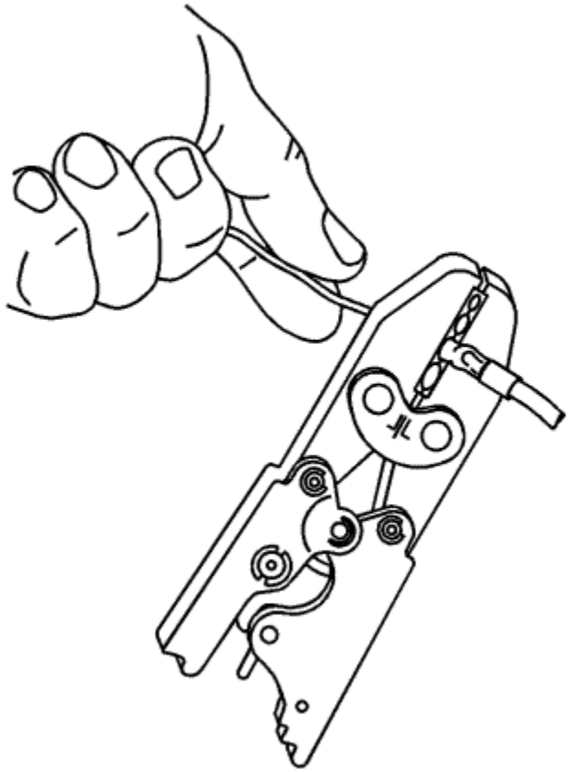

4. Use the proper crimp tool to crimp the splice sleeve to the smaller wire (harness side of repair). Complete the crimp as usual (using the heat tool to shrink the tube).

&#169© Copyright Chevrolet. All rights reserved

Wiring Harness Repair

Please use the existing Opel/Vauxhall wiring harness repair strategy as described in the paper manual:

"Wiring Harness Repair" (KTA-1950/2).

High Temperature Wiring Repairs

Danger: This procedure should not be performed on high voltage circuits. Performing this procedure on high voltage circuits may result in serious injury or death.

Note: All wiring repairs need to be 200 mm from the heat zone. Areas for consideration would be any area located near the exhaust manifolds, catalytic converter, exhaust pipes, and turbocharged engines.

Items Required

- DuraSeal splice sleeves to crimp and seal connections
- High temperature SCT1 shrink tubing to protect the splice sleeves
- Terminated leads or pigtails
- The correct tools to remove the terminals from the connectors

Use high temperature bulk wire rated at 150°C (302°F) continuous temperature of the same or larger gauge size as the original wire when repair damage wire. Also replace any reflective tape that you remove during the repair.

High Temperature Wiring

Wiring that is exposed to high temperatures, 135°C (275°F) or higher, for prolonged periods of time may use materials i.e. wires, connectors, and shielding that has a higher heat rating than typical wiring. When making a repair in a high temperature area observe the following:

- Use high temperature bulk wire rated at 150°C (302°F) continuous temperature to replace any damaged wire.
- Replace any heat shielding that is removed.
- Cover any DuraSeal splice sleeves with SCT1 shrink tubing.
- After making a wiring repair, ensure that the location of the wiring is not moved closer to the heat source.

Identifying High Temperature Wiring

Note: High temperature areas would be areas located near exhaust manifolds, catalytic converters, exhaust pipes, and turbocharged engines.

Wiring that is exposed to high temperature, 135°C (275°F) or higher, for prolonged periods of time need special considerations when making wiring repairs. Areas that may be exposed to higher temperatures can be identified by heat resistant materials that are being used in those areas. These materials may include heat reflective tape, moon tape, and high temperature shrink tubing. Also conduit and other protective coverings may be used. Because conduit or similar coverings are used throughout the vehicle

regardless of the temperature, it may be necessary for the technician to determine if an area is exposed to excessive heat before making a wiring repair.

&#169© Copyright Chevrolet. All rights reserved

Heated Oxygen Sensor Wiring Repairs

Caution: Do not solder repairs under any circumstances as this could result in the air reference being obstructed.

If the heated oxygen sensor pigtail wiring, connector, or terminal is damaged the entire oxygen sensor assembly must be replaced. Do not attempt to repair the wiring, connector, or terminals. In order for the sensor to function properly it must have a clean air reference. This clean air reference is obtained by way of the oxygen sensor signal and heater wires. Any attempt to repair the wires, connectors or terminals could result in the obstruction of the air reference and degrade oxygen sensor performance.

The following guidelines should be used when servicing the heated oxygen sensor:

- Do not apply contact cleaner or other materials to the sensor or vehicle harness connectors. These materials may get into the sensor, causing poor performance. Also, the sensor pigtail and harness wires must not be damaged in such a way that the wires inside are exposed. This could provide a path for foreign materials to enter the sensor and cause performance problems.
- Neither the sensor nor vehicle lead wires should be bent sharply or kinked. Sharp bends, kinks, etc., could block the reference air path through the lead wire.
- Do not remove or defeat the oxygen sensor ground wire (where applicable). Vehicles that utilize the ground wire sensor may rely on this ground as the only ground contact to the sensor. Removal of the ground wire will also cause poor engine performance.
- To prevent damage due to water intrusion, be sure that the peripheral seal remains intact on the vehicle harness connector.

&#169© Copyright Chevrolet. All rights reserved

Splicing Copper Wire Using Splice Sleeves

Special Tools

- *EL-38125-10* Splice Sleeve Crimping Tool
- *EL-38125-5* Ultra Torch Special Tool
- *J-38125-8* Splice Sleeve Crimping Tool
- DuraSeal splice sleeves, in order to repair the SIR/SRS wiring

For equivalent regional tools, refer to Special Tools .

Danger: In order to reduce the risk of personal injury, loss of high-voltage isolation to earth and higher system impedance, do not attempt to repair any HV wiring, connector or terminal that is damaged. High-voltage coaxial type cables are not repairable. Never attempt to repair a coaxial type cable. The entire cable/harness or component must be replaced. In order to maintain system integrity and personal safety, never attempt to repair any high-voltage wiring, cables or terminals. Performing this procedure on high-voltage circuits may result in serious injury or death.

Note: Use only DuraSeal splice sleeves. Other splice sleeves may not protect the splice from moisture or provide a good electrical connection.

Use DuraSeal splice sleeves to form a one-to-one splice on all types of insulation, except Tefzel and coaxial. Use DuraSeal splice sleeves where there are special requirements such as moisture sealing. Follow the instructions below in order to splice copper wire using DuraSeal splice sleeves.

Splice Sleeve Colour	Crimp Tool Nest Colour		Wire gauge mm² / (AWG)
	3 Crimp Nests	4 Crimp Nests	
Salmon (Yellow-Pink) 19168446	Red (1) or Red/Green (1)	Red (2)	0.5-0.8/(18-20)
Blue 19168447	Blue (2)	Blue (3)	1.0-2.0/(14-16)
Yellow 19168448	Yellow (3)	Yellow (4)	3.0-5.0/(10-12)

Note: You must perform the following procedures in the listed order. Repeat the procedure if any wire strands are damaged. You must obtain a clean strip with all of the wire strands intact.

1. Open the harness by removing any tape:
   - Use a sewing seam ripper, available from sewing supply stores, in order to cut open the harness in order to avoid wire insulation damage.
   - Use the DuraSeal splice sleeves on all types of insulation except Tefzel and coaxial.
   - Do not use the crimp and DuraSeal splice sleeve to form a splice with more than 2 wires coming together.
2. Cut as little wire off the harness as possible. You may need the extra length of wire in order to change the location of a splice.

   Adjust splice locations so that each splice is at least 40 mm (1.5 in) away from the other splices, harness branches, or connectors.

3. Strip the insulation:
   - When adding a length of wire to the existing harness, use the same size wire as the original wire.
   - Perform one of the following items in order to find the correct wire size:
     - Find the wire on the schematic and convert to regional wiring gauge size.
     - If you are unsure of the wire size, begin with the largest opening in the wire stripper and work down until achieving a clean strip of the insulation.
   - Strip approximately 5.0 mm (0.20 in) of insulation from each wire to be spliced.
   - Do not nick or cut any of the strands. Inspect the stripped wire for nicks or cut strands.
   - If the wire is damaged, repeat this procedure after removing the damaged section.
4. For high temperature wiring, slide a section of high temperature SCT1 shrink tubing over the length of wire to be spliced. Ensure that the shrink tubing will not interfere with the splice procedure.
5. Select the proper DuraSeal splice sleeve according to the wire size. Refer to the above table at the beginning of the repair procedure for the colour coding of the DuraSeal splice sleeves and the crimp tool nests.

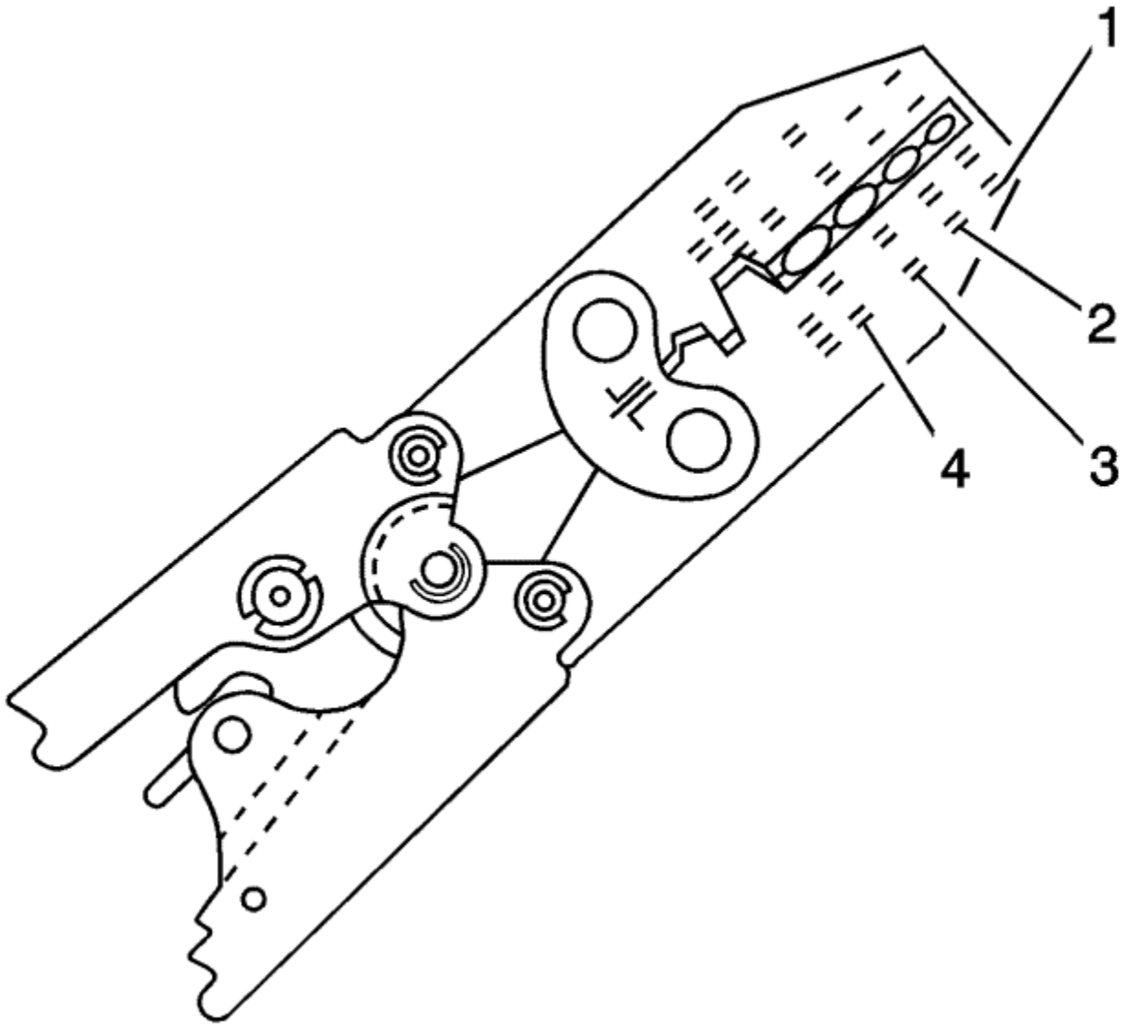

6. The *EL-38125-10* splice sleeve crimping tool has four crimp nests. The largest crimp nest (4) is used for crimping 10 and 12 gauge wires. The second largest crimp nest (3) is used for crimping 14 and 16 gauge wires. The third largest crimp nest (2) is used for crimping 18 and 20 gauge wires. The smallest crimp nest (1) is used for crimping 22 to 26 gauge wires. The crimp nests are referenced in the table (farther above) under the crimp tool nest color.

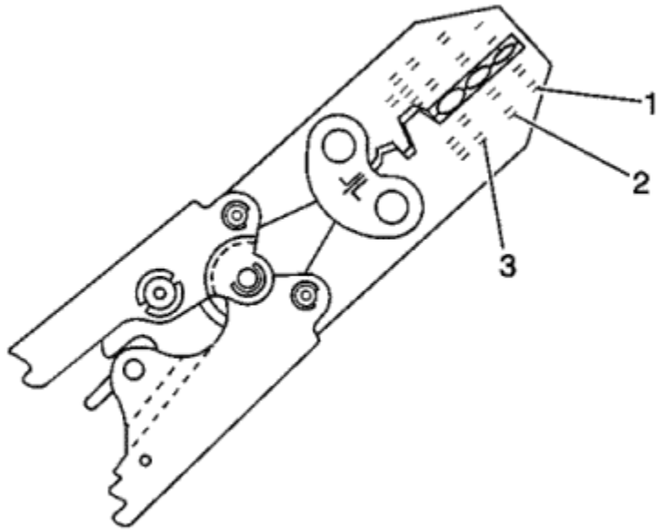

7. The *J-38125-8* splice sleeve crimping tool has three crimp nests. The largest crimp nest (3) is used for crimping 10 and 12 gauge wires. The second largest crimp nest (2) is used for crimping 14 and 16 gauge wires. The smallest crimp nest (1) is used for crimping 18 to 20 gauge wires. The crimp nests are referenced in the table (farther above) under the crimp tool nest color.
8. Use the splice sleeve crimping tool in order to position the DuraSeal splice sleeve in the correct colour nest of the splice sleeve crimping tool. For the four crimp nest tool, use the three largest crimp nests to crimp the splice sleeves. For the three crimp nest tool, use all three crimp nests to crimp the splice sleeves. Use the four and three crimp tool diagrams (above) and the table (farther above) to match the splice sleeve with the correct crimp nest. The crimp tool diagram call-out numbers match the numbers in the table (under crimp tool nest colour).

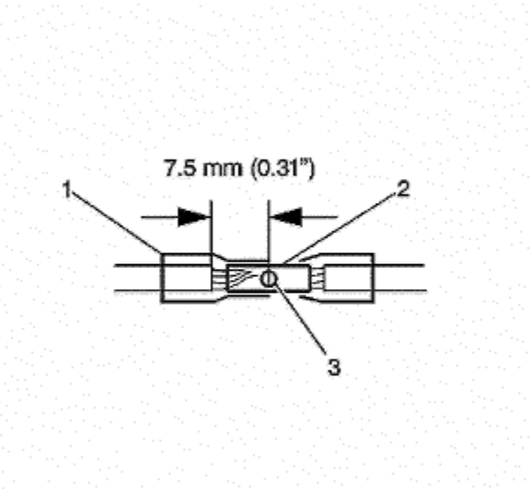

9. Place the DuraSeal splice sleeve in the nest. Ensure that the crimp falls midway between the end of the barrel and the stop. The sleeve has a stop (3) in the middle of the barrel (2) in order to prevent the wire (1) from going further. Close the hand crimper handles slightly in order to firmly hold the DuraSeal splice sleeve in the proper nest.

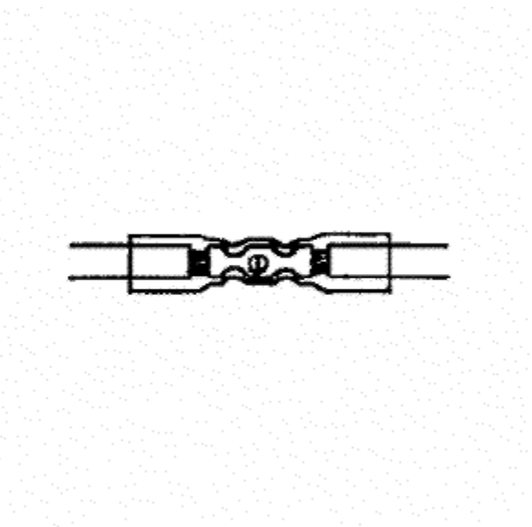

10. Insert the wire into the splice sleeve barrel until the wire hits the barrel stop.
11. Tightly close the handles of the crimp tool until the crimper handles open when released.

    The crimper handles will not open until you apply the proper amount of pressure to the DuraSeal splice sleeve. Repeat steps 4 and 6 for the opposite end of the splice.

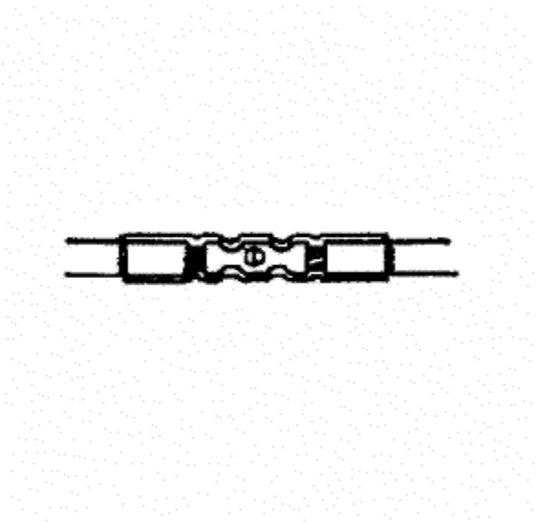

12. Using the EL-38125-5 ultra torch, apply heat to the crimped area of the barrel.
13. Start in the middle and gradually move the heat barrel to the open ends of the tubing:
    - The tubing will shrink completely as the heat is moved along the insulation.
    - A small amount of sealant will come out of the end of the tubing when sufficient shrinkage is achieved.

High Temperature Wiring Repairs

Use the following procedures to perform high temperature wiring repairs:

1. Centre the high temperature SCT1 shrink tube over the DuraSeal splice sleeve.
2. Using the EL-38125-5 ultra torch, apply heat to the high- temperature heat shrink tubing.
3. Gradually move the heat from the centre to the open end of the tubing:
    - The tubing will shrink completely as the heat is moved along the insulation.
    - A small amount of sealant will come out of the end of the tubing when sufficient shrinkage is achieved.
4. Replace any reflective tape and clips that may have been removed during the repair.

&#169© Copyright Chevrolet. All rights reserved

Splicing Twisted or Shielded Cable

Danger: In order to reduce the risk of personal injury, loss of high-voltage isolation to earth and higher system impedance, do not attempt to repair any HV wiring, connector or terminal that is damaged. High-voltage coaxial type cables are not repairable. Never attempt to repair a coaxial type cable. The entire cable/harness or component must be replaced. In order to maintain system integrity and personal safety, never attempt to repair any high-voltage wiring, cables or terminals. Performing this procedure on high-voltage circuits may result in serious injury or death.

Twisted/shielded cable is used in order to protect wiring from electrical noise. Two-conductor cable of this construction is used between the radio and the Delco-Bose® speaker/amplifier units and other applications where low level, sensitive signals must be carried. Follow the instructions below in order to repair the twisted/shielded cable.

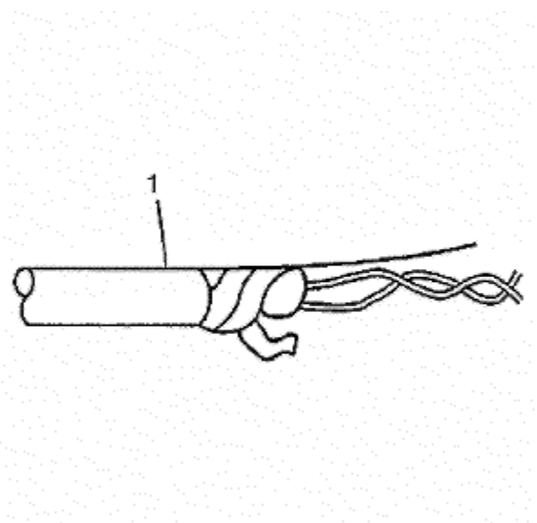

1. Remove the outer jacket (1). Use care not to cut into the drain wire of the mylar tape.
2. Unwrap the tape. Do not remove the tape. Use the tape in order to rewrap the twisted conductors after the splice is made.

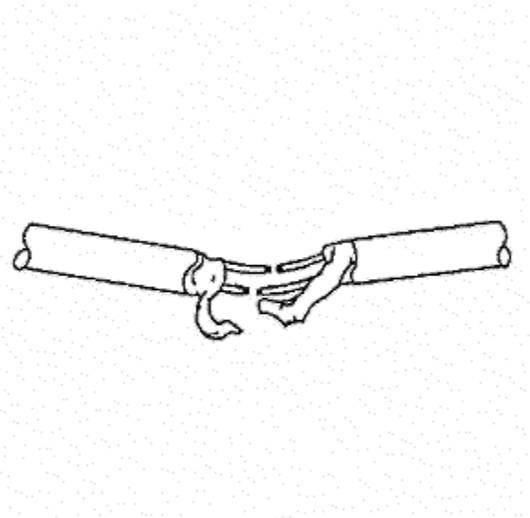

3. Prepare the splice. Untwist the conductors and follow the instructions for Splicing Copper Wire Using Splice Sleeves . Staggering the splices by 65 mm (2.5 in) is recommended.

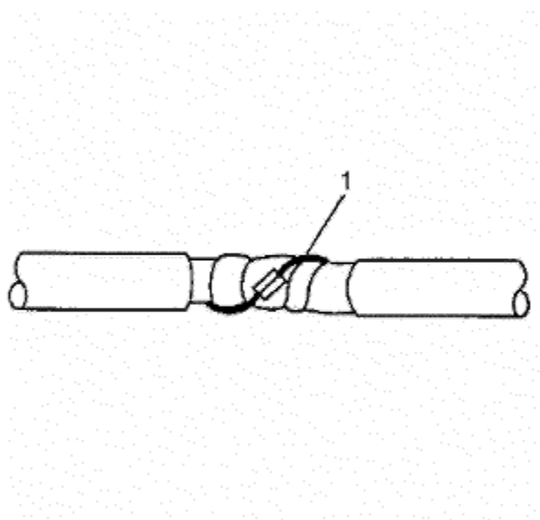

Note: Apply the mylar tape with the aluminium side inward. This ensures good electrical contact with the drain wire.

4. Re-assemble the cable.
   - Rewrap the conductors with the mylar tape. If the mylar tape is damaged, use 3M product AL-36FR to replace the damaged mylar tape.
   - Use caution not to wrap the drain wire in the tape (1).

- Follow the splicing instructions for copper wire and splice the drain wire.
- Wrap the drain wire around the conductors and tape with electrical tape to replace the outer insulation.

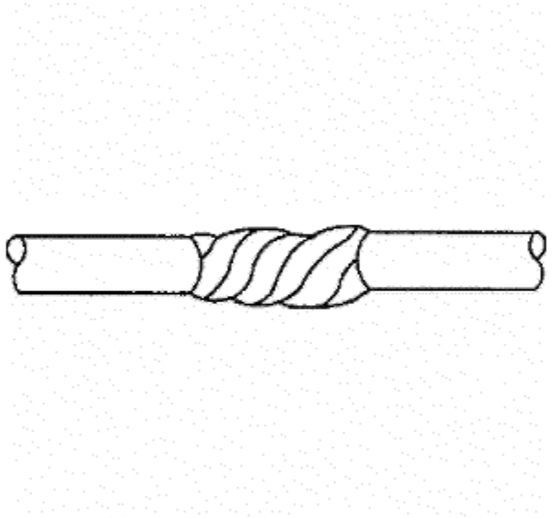

5. Tape over the entire cable. Use a winding motion when you apply the tape.

&#169© Copyright Chevrolet. All rights reserved

Splicing Inline Harness Diodes

Many vehicle electrical systems use a diode to isolate circuits and protect the components from voltage spikes. When installing a new diode use the following procedure.

1. Open the harness.
   - If the harness is taped, remove the tape.
   - To avoid wiring insulation damage, use a sewing seam ripper (available from sewing supply stores) in order to cut open the harness.
   - If the harness has a black plastic conduit, pull out the diode.
2. If the diode is taped to the harness, remove all of the tape.
3. Check and record the current flow direction and orientation of diode.
4. Remove the inoperative diode from the harness with a suitable soldering tool.

   Note: If the diode is located next to a connector terminal remove the terminal(s) from the connector to prevent damage from the soldering tool.

5. Carefully strip away a section of insulation next to the old soldered portion of the wire(s). Do not remove any more than is needed to attach the new diode.
6. Check current flow direction of the new diode, being sure to install the diode with correct bias. Reference the appropriate service manual wiring schematic to obtain the correct diode installation position.
7. Attach the new diode to the wire(s) using 60/40 rosin core solder. Before soldering attach some heat sinks (aluminium alligator clips) across the diode wire ends to protect the diode from excessive heat. Follow the manufacturer's instruction for the soldering equipment.
8. Reinstall terminal(s) into the connector body if previously removed.

   Note: To prevent shorts to ground and water intrusion, completely cover all exposed wire and diode attachment points with tape.

9. Tape the diode to the harness or connector using electrical tape.

&#169© Copyright Chevrolet. All rights reserved

Wiring Harness Repair

Please use the existing Opel/Vauxhall wiring harness repair strategy as described in the paper manual:

"Wiring Harness Repair" (KTA-1950/2).

Connector Repairs

Connector Repairs contains a list of all connector repairs. The connector repairs are listed by the connector manufacturer and then by connector type. If the technician cannot identify the manufacturer of the connector, refer to Identifying Connectors below. Knowing the connector manufacturer will assist in finding the correct connector repair from the following list:

- Connector Position Assurance Locks
- Terminal Position Assurance Locks
- AFL/EPC Connectors
- Bosch Connectors : ECM → 2.8 JPT → 0.64 → BSK
- Delphi Connectors : Steering Gear → 12-Way → Micro .64 → Micro-Pack 100W → Pull To Seat → Push To Seat → Weather Pack
- FCI Connectors : SIR → Lever Lock
- FEP Connectors : Steering Gear
- JST Connectors
- Kostal Connectors : Transmission → Glow Plug Control Module
- Molex Connectors
- Sumitomo Connectors
- Tyco/AMP Connectors : SIR → 102-Way Inline → Seat → Door Module → 43-Way → 0.25 Cap → Sensor → CM 42-Way
- Yazaki Connectors : 16-Way → 2-Way
- Repairing Connector Terminals : Terminated Lead Repair

Connector Anatomy

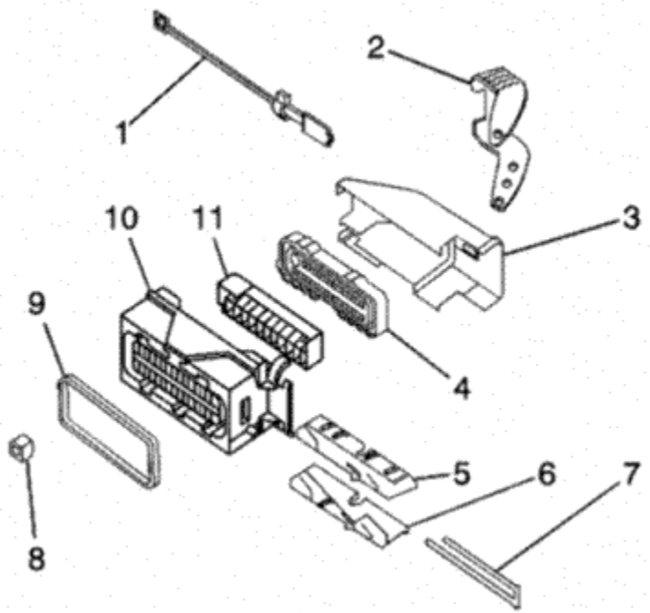

(1) Connector Positive Assurance (CPA)
(2) Assist Lever
(3) Wiredress Cover
(4) Seal Strain/Relief
(5) Slide Left Hand
(6) Slide Right Hand
(7) Terminal Positive Assurance (TPA)
(8) Terminal Positive Assurance (TPA)
(9) Connector Seal
(10) Connector Housing
(11) Inner Connector

Identifying Connectors

Knowing the connector manufacturer is helpful when trying to locating the correct connector repair procedure. There are many different connector designs used on GM vehicles and it is sometimes difficult to identify the connector manufacturer. The information in this document should help with the identification of connector manufactures.

The following connector manufacturers make most of the connectors found in GM vehicles:

- AFL/EPC (Alcoa Fujikura Ltd./Engineered Plastics Components)
- Bosch

- Delphi
- FCI (Framatome Connectors International)
- JAE (Japan Aviation Electronics)
- JST (Japan Solderless Terminals)
- Kostel
- Molex
- Sumitomo
- Tyco/AMP
- Yazaki

Identifying the manufacturer of a connector is often difficult. When trying to determine the manufacturer of a connector, look for specific identifying marks that are unique to that connector supplier. Most of these identify marks are hard to find or see. Check the connector carefully and refer to the information below for pictures and descriptions of connector identification markings.

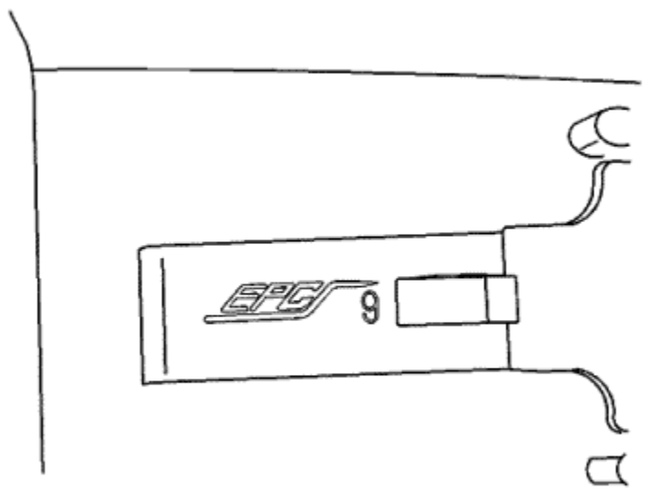

- Most of AFLs connectors have EPC on their connector body. Some of the smaller connectors will not have any markings on them.

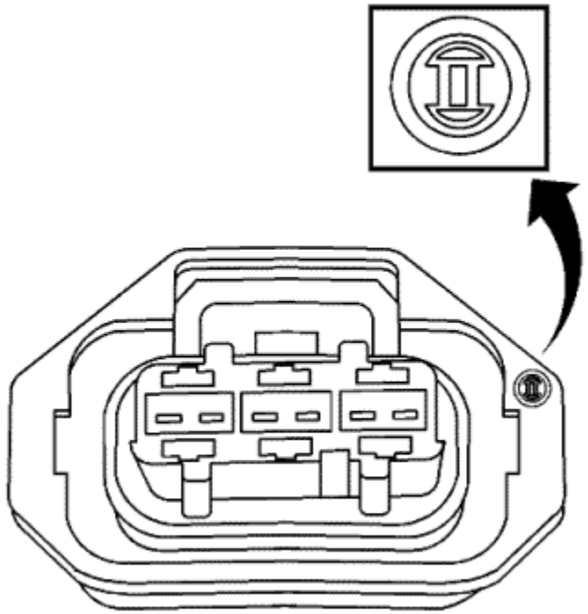

- In some cases Bosch will actually be printed on the connector. If Bosch does not appear on the connector, look for the Bosch logo. The Bosch logo is a circle with a blunted arrow inside. This logo can appear anywhere on the connector and is often very small.

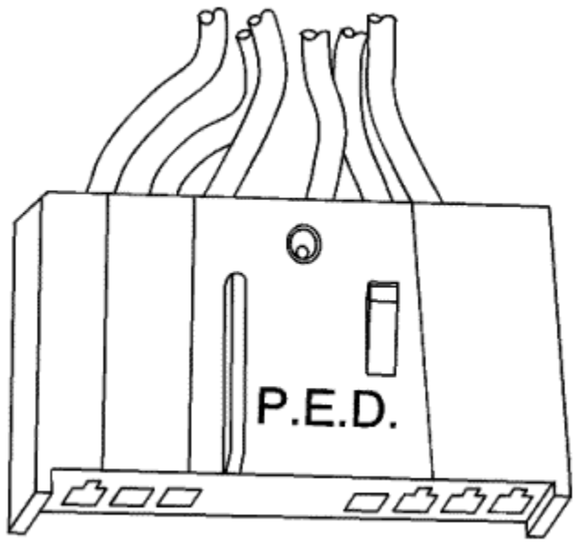

- In some cases Delphi will actually be printed on the connector. If Delphi is not printed on the connector, look for PED. In both cases there is no specific orientation for Delphi or PED and they can appear anywhere on the connector.

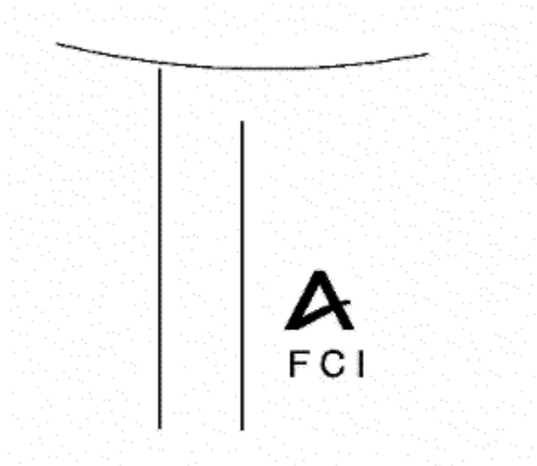

- FCI connectors may have the FCI logo on their connectors. The logo is the letters FCI with an "A" above it.

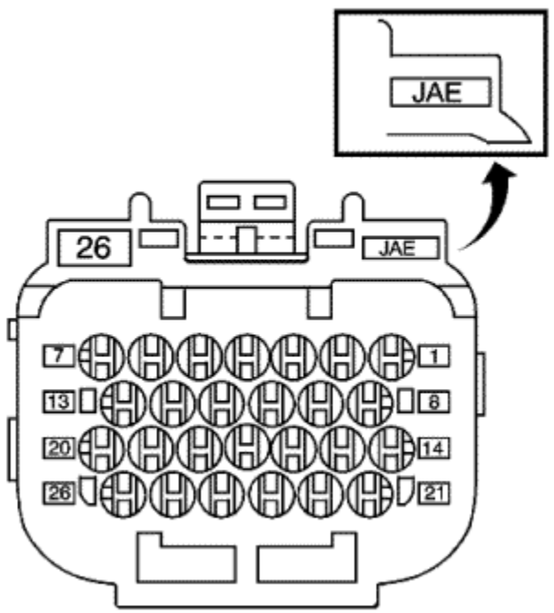

- JAE connector have JAE in small letters on their connectors.

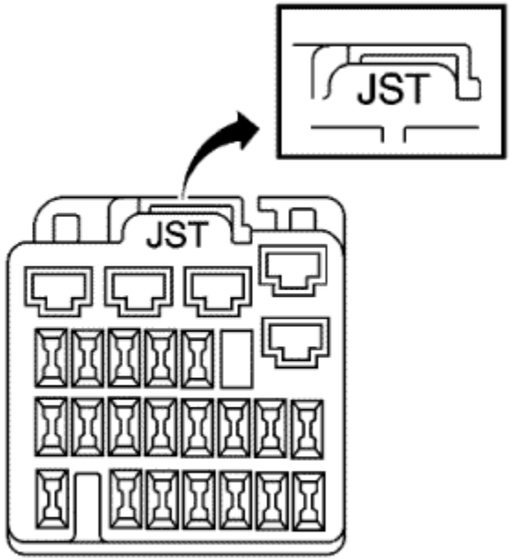

- JST connectors have JST in small letters on their connectors, similar to that above. The location of the logo will vary with the connector size and style.

- Kostel has an "LK" with a circle around it. These connector are usually used as a transmissions connection.

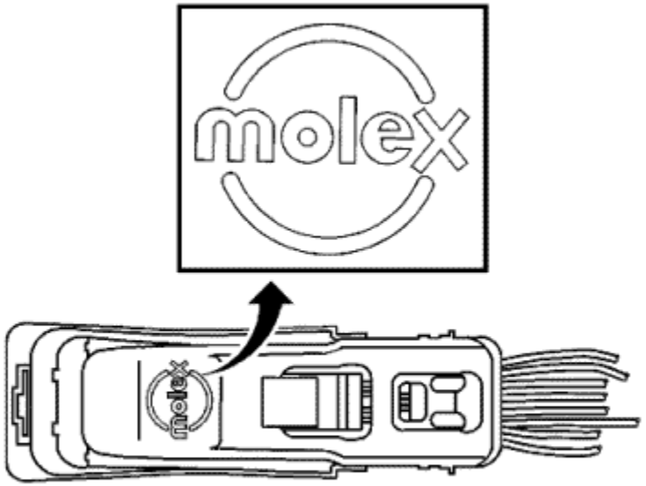

- Most Molex connectors will have the Molex logo on the dresscover of the connector. In some cases the connectors may have MX followed by another letter. The third letter indicates where the connector was made. A connector with MXD is a Molex connector made in Detroit.

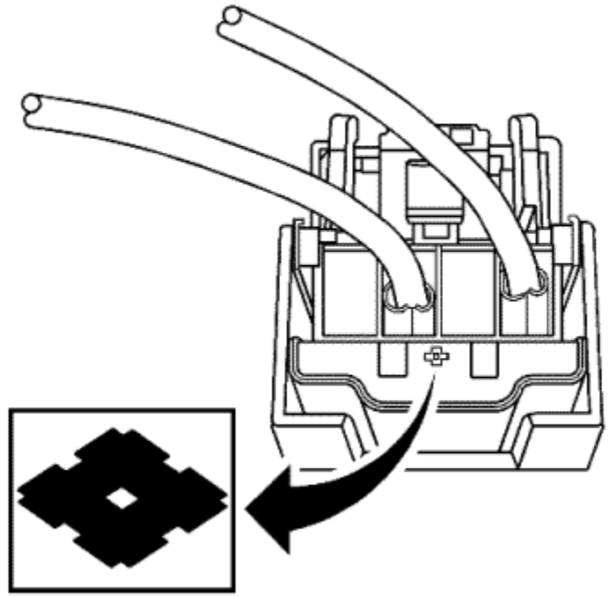

- Sumitomo has a unique symbol on their connector and possibly a part number. The symbol is similar to that of a diamond lying on its side, similar to that shown. The logo could appear anywhere but the most common place is at the wire side of the housing.
- Tyco/AMP has many different and unique connector designs. Some may or may not have identifiable marks on them.

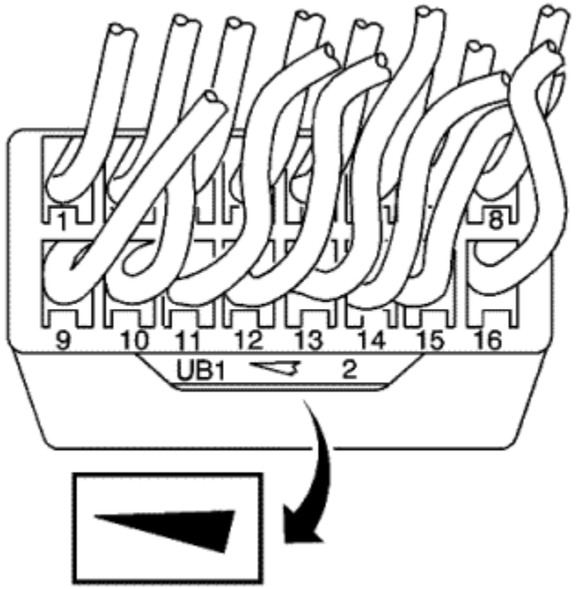

- Yazaki has a wedge or arrow shape, similar to that shown.

&#169© Copyright Chevrolet. All rights reserved

Connector Position Assurance Locks

The connector position assurance (CPA) is a small plastic insert that fits through the locking tabs of the connector. CPAs are used in various connectors throughout the vehicle. CPAs are also used in all SIR system electrical connectors. The CPA ensures that the connector halves cannot vibrate apart. You must have the CPA in place in order to ensure good contact between the mating terminals of the connector.

© Copyright Chevrolet. All rights reserved

Terminal Position Assurance Locks

The terminal position assurance (TPA) insert resembles the plastic combs used in the control module connectors. The TPA keeps the terminal securely seated in the connector body. Do not remove the TPA from the connector body unless you remove a terminal for replacement. If the TPA is removed, be sure to reinstall it before reconnecting the connector.

© Copyright Chevrolet. All rights reserved

AFL/EPC Connectors

Special Tools

- *EL-38125-580* Terminal Release Tool Kit
- *J-38125-12A* Terminal Release Tool
- *J-38125-216* Terminal Release Tool

For equivalent regional tools, refer to Special Tools .

Terminal Removal Procedure

Follow the steps below in order to remove terminals from the connector.

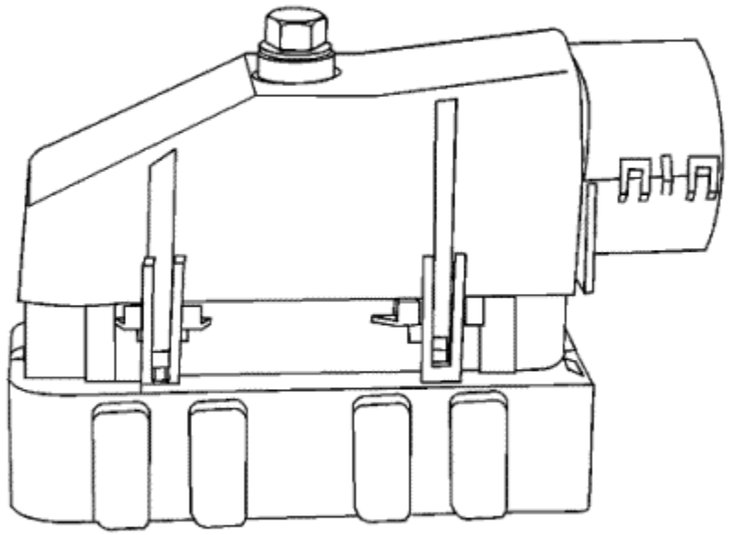

1. For connectors with a bolt in the dress cover, turn the bolt anti-clockwise to remove the connector from the component.

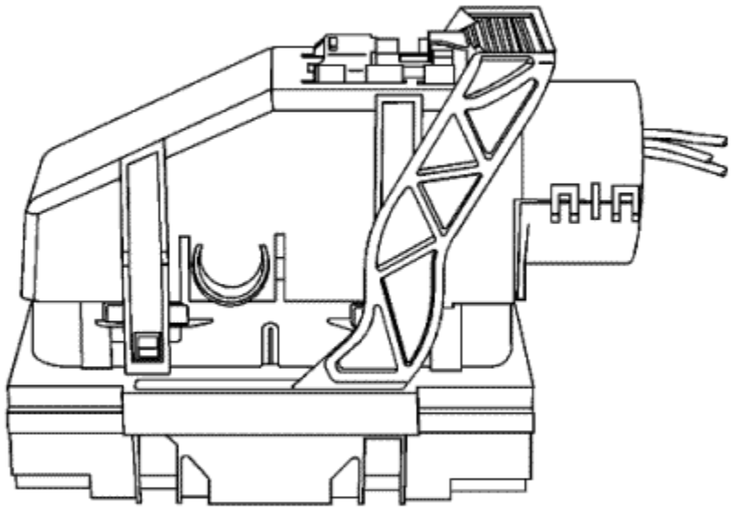

2. Locate the connector position assurance (CPA) on the top of the wire dress cover. Slide the CPA forward.

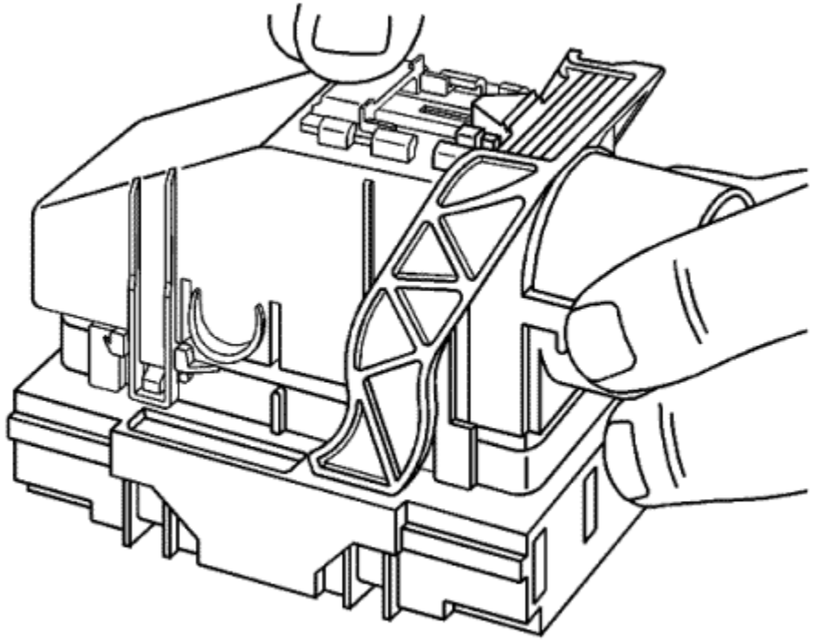

3. Slide the lever lock forward while pressing down on the lever lock release tab.

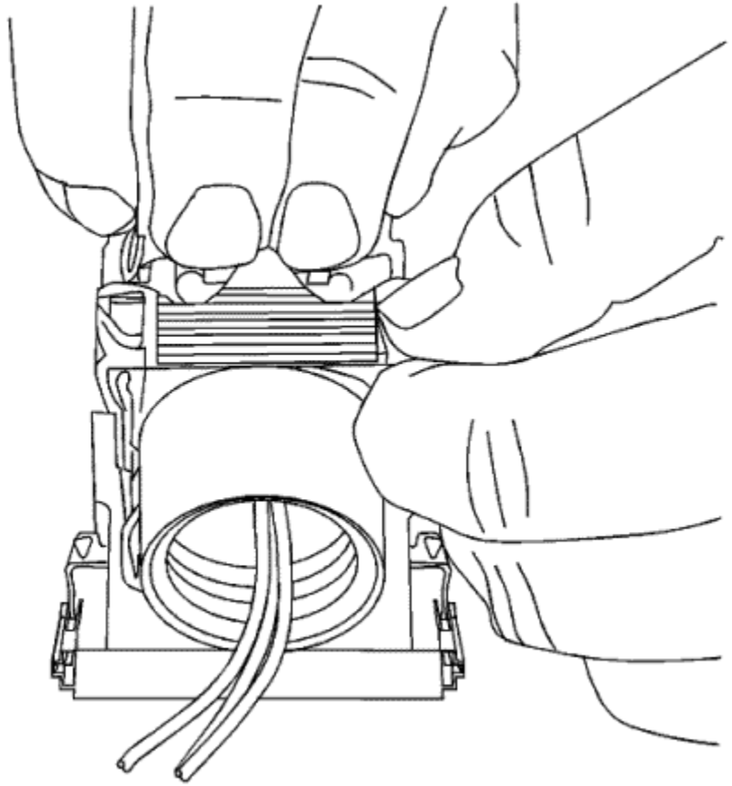

4. View showing depressing of the lever lock release tab.

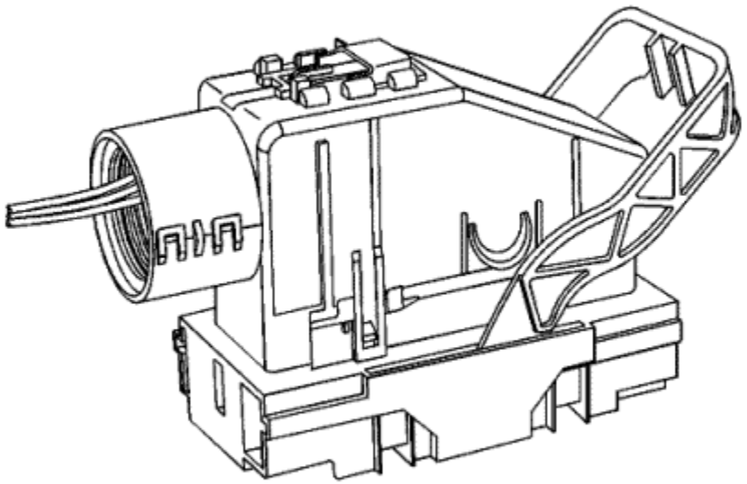

5. View of connector in released position.
6. Disconnect the connector from the component.
7. Locate the dress cover locking tabs at the corners of the dress cover. Use a small flat-blade tool to release the locking tabs and remove the dress cover.

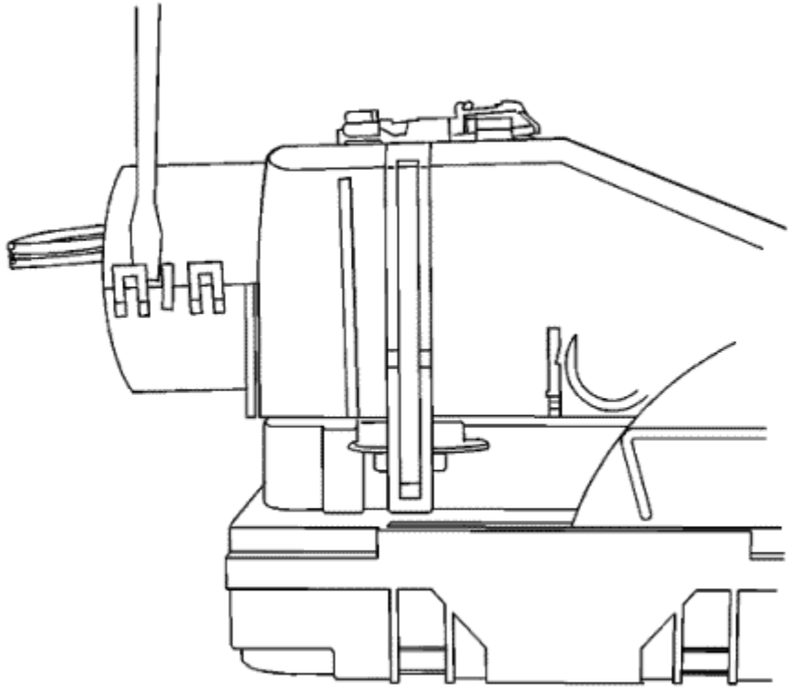

8. Release the rear lower half of the wiredress cover.

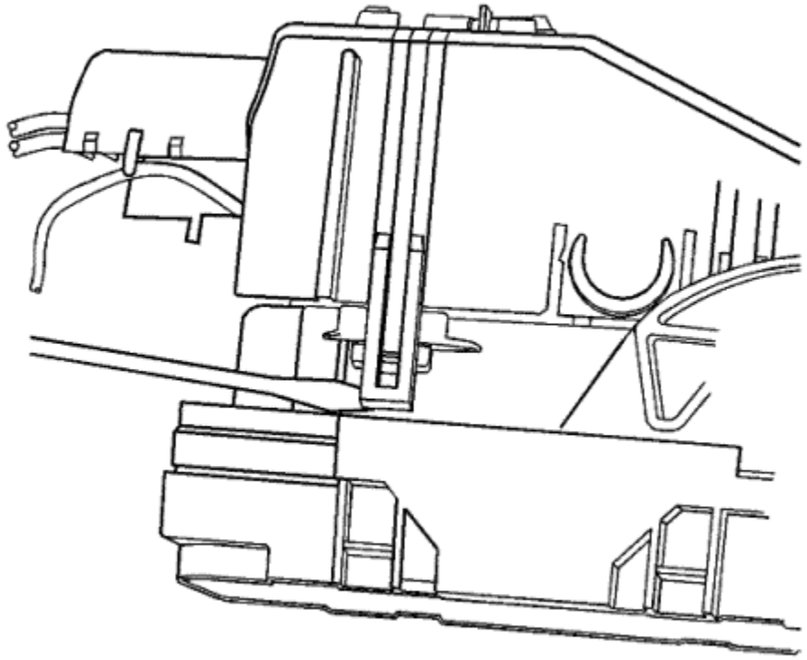

9. Release the tabs that are holding the wiredress cover to the connector body.
10. Remove the nose piece by inserting a small flat-blade tool into the slots on both ends of the connector body. Gently prise the nose piece out of the connector. J-38125-216 can also be used to remove the nose piece.

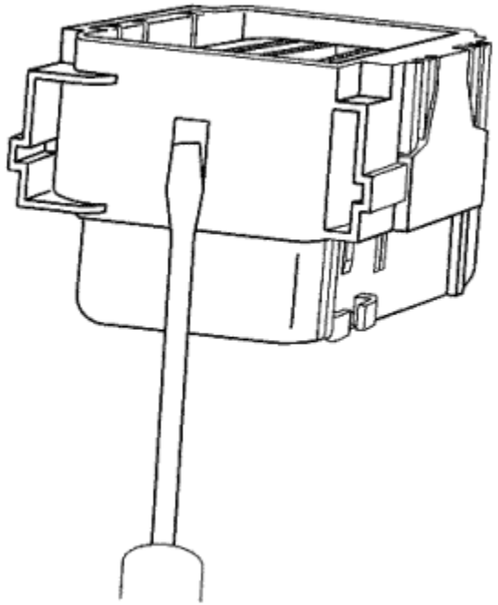

11. Use the J-38125-12A tool to release the terminals by lifting the terminal retaining tabs on the inside of the connector.

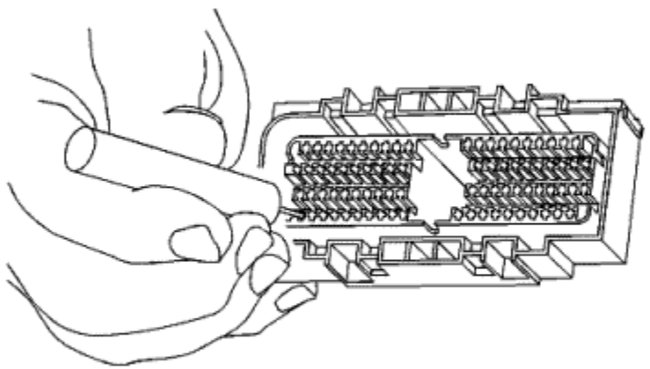

12. While holding the removal tool in place, gently pull the wire out of the back of the connector. Always remember never use force when pulling a terminal out of a

connector.

13. Repair the terminal by following the Repairing Connector Terminals : Terminated Lead Repair procedure.
14. Insert the repaired terminal back into the cavity. Repeat the diagnostic procedure to verify the repair and reconnect the connector bodies.

&#169© Copyright Chevrolet. All rights reserved

Bosch Connectors - BSK

Special Tools

- *EL-38125-580* Terminal Release Tool Kit
- *J-38125-561* Terminal Release Tool

For equivalent regional tools, refer to Special Tools .

Terminal Removal Procedure

1. Disconnect the connector from the component.
2. Remove the wire dress cover, if necessary.
3. Push the wire side of the terminal that is being removed toward the connector and hold it in position.

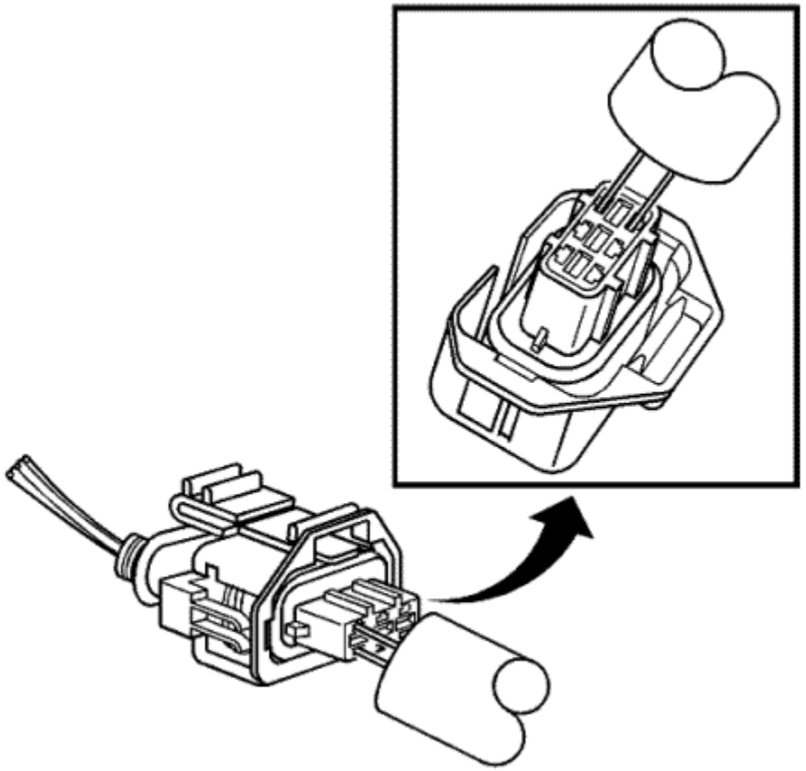

4. Insert the J-38125-561 tool into the 2 cavities on each side of the terminal at the front of the connector and push until you feel the tool disengage the terminal retainers.
5. Carefully pull the terminal out of the connector. Always remember never use force when pulling a terminal out of a connector. If the terminal is difficult to remove, repeat the entire procedure.
6. Repair the terminal by following the Repairing Connector Terminals : Terminated Lead Repair procedure.
7. Insert the repaired terminal back into the cavity. Repeat the diagnostic procedure to verify the repair and reconnect the connector bodies.

© Copyright Chevrolet. All rights reserved

Bosch Connectors - 0.64

Special Tools

- *EL-38125-580* Terminal Release Tool Kit
- *J-38125-560* Terminal Release Tool

For equivalent regional tools, refer to Special Tools .

Terminal Removal Procedure

1. Locate the lever lock on the wire dress cover. While pressing the lock, pull the lever over and past the lock until the lever is at the end of its travel.
2. Disconnect the connector from the component.
3. Pull the rubber boot that covers the wires back to expose the end of the connector dress cover.
4. Place the connector locking lever in the centre of the connector.

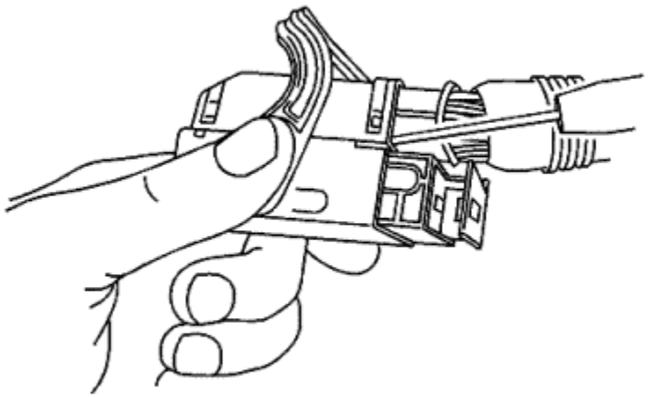

5. Locate the 2 dress cover locking tabs that are on the wire end of the connector. Insert a small flat-bladed tool between the cover and connector body and prise up.

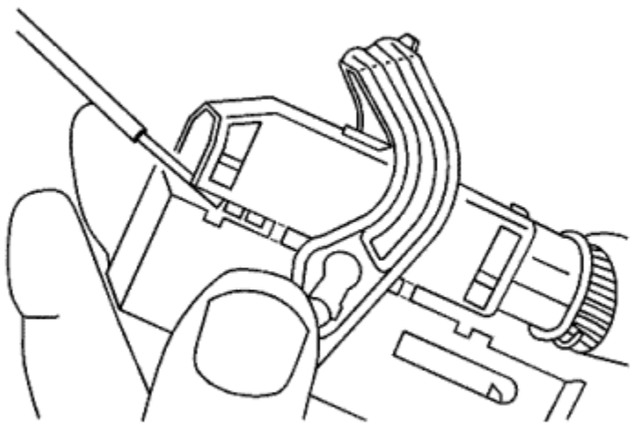

6. Locate the 2 dress cover locking tabs located on the opposite side of the connector. Insert a small flat-bladed tool between the cover at the connector end and prise up.

7. Remove the dress cover.
8. Cut the tie wrap on the wire bundle.

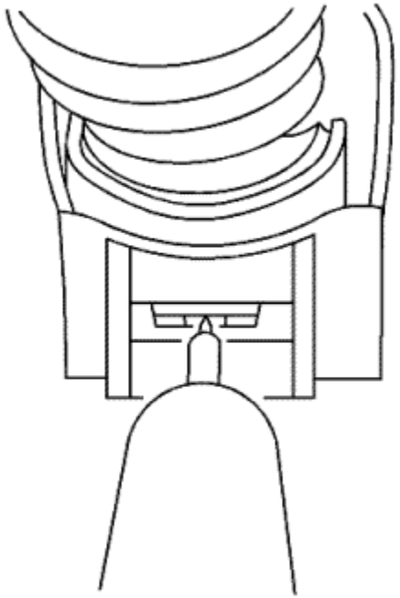

9. Remove the terminal position assurance (TPA) by inserting a small flat-bladed tool into the small slot in the end of the slider and pushing on the TPA until it comes out of the connector. When the TPA exits the opposite side of the connector, gasp the TPA and pull it completely out of the connector.
10. Push the wire side of the terminal that is being removed toward the connector and hold it in position.

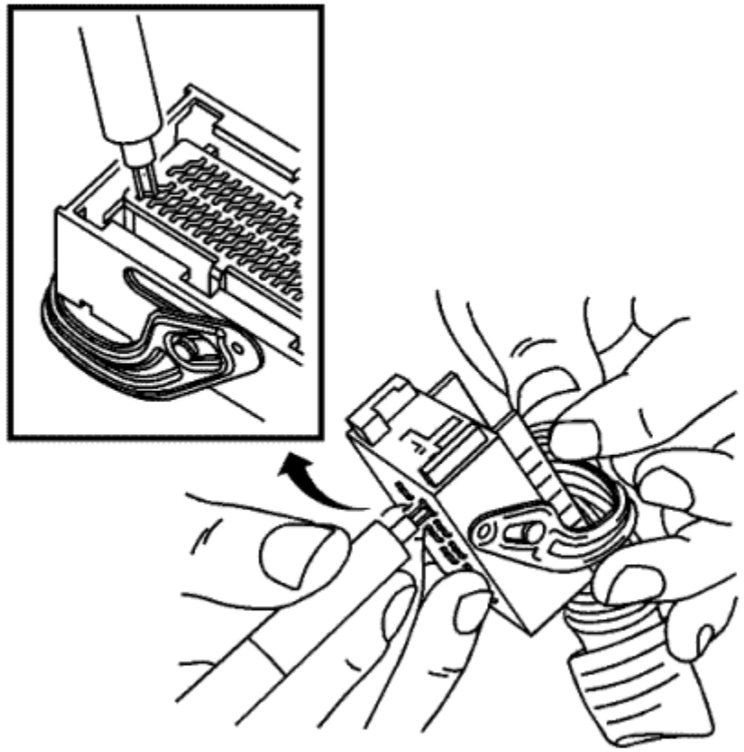

11. Insert the J-38125-560 into the 2 triangular cavities on each side of the terminal at the front of the connector.
12. Carefully pull the terminal out of the connector. Always remember never use force when pulling a terminal out of a connector. If the terminal is difficult to remove, repeat the entire procedure.
13. Repair the terminal by following the Repairing Connector Terminals : Terminated Lead Repair procedure.
14. Insert the repaired terminal back into the cavity. Repeat the diagnostic procedure to verify the repair and reconnect the connector bodies.

Terminal Insertion Procedure

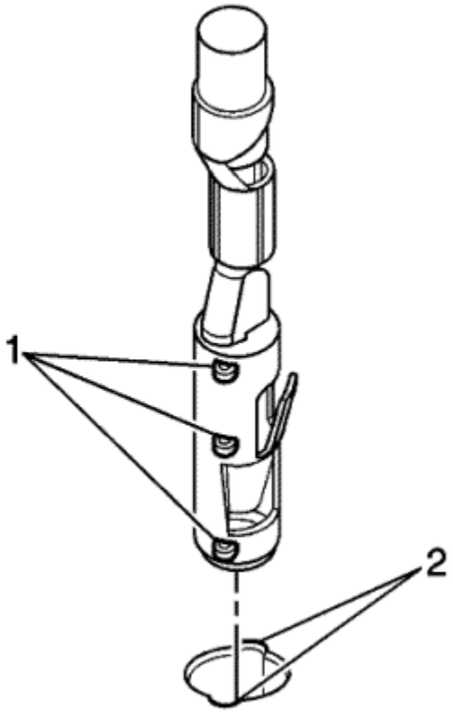

1. Prior to installation the terminal must be aligned so the (1) coding lugs align with the (2) coding grooves on the connector.
2. Once the terminal is aligned, slide the terminal into the cavity until the retainer has engaged in the cavity of the connector.
3. Slide the TPA in the connector body and seat it using a small flat bladed tool. The TPA is seated when it is flush with the contact housing.
4. Secure the wires to the connector body using a tie wrap and replace the dress cover and grommet.

© Copyright Chevrolet. All rights reserved

Bosch Connectors - 2.8 JPT

Special Tools

- *EL-38125-580* Terminal Release Tool Kit
- *J-38125-557* Terminal Release Tool

For equivalent regional tools, refer to Special Tools .

Terminal Removal Procedure

1. Pull out the slider on the connector position assurance (CPA) until it is at the end of its travel.
2. Disconnect the connector from the component.
3. Remove the wire dress cover, if necessary.
4. Push the wire side of the terminal that is being removed toward the connector and hold it in position.

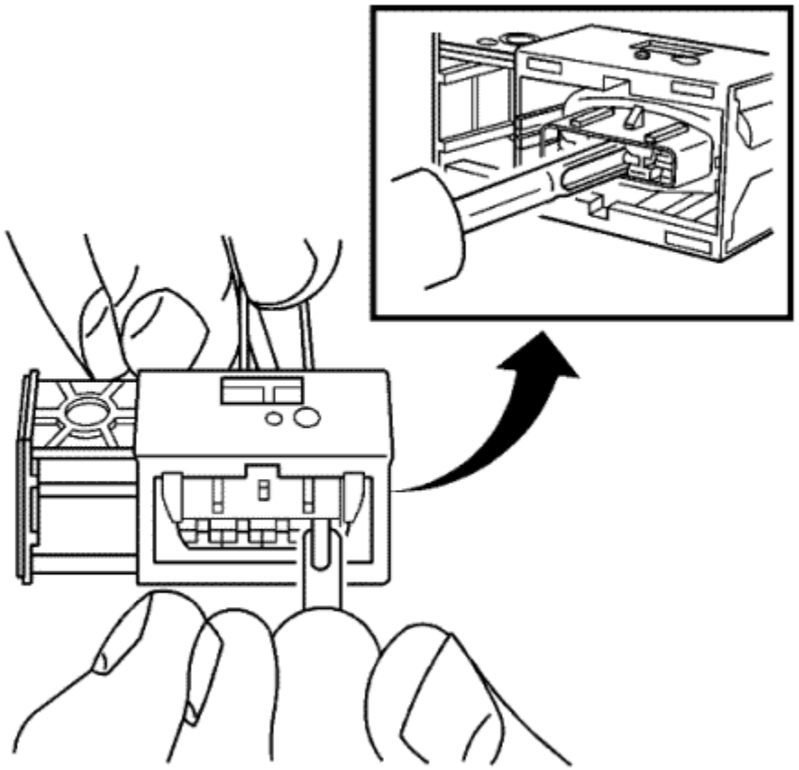

5. Insert the J-38125-557 into the 2 cavities on each side of the terminal at the front of the connector and push until you feel the tool disengage the terminal retainers.
6. Carefully pull the terminal out of the connector. Always remember never use force when pulling a terminal out of a connector. If the terminal is difficult to remove, repeat the entire procedure.
7. Repair the terminal by following the Repairing Connector Terminals : Terminated Lead Repair procedure.
8. Insert the repaired terminal back into the cavity. Repeat the diagnostic procedure to verify the repair and reconnect the connector bodies.

© Copyright Chevrolet. All rights reserved

Bosch Connectors - ECM

Special Tools

- *EL-38125-580* Terminal Release Tool Kit
- *J-38125-213* Terminal Release Tool
- *J-38125-556* Terminal Release Tool

For equivalent regional tools, refer to Special Tools .

Terminal Removal Procedure

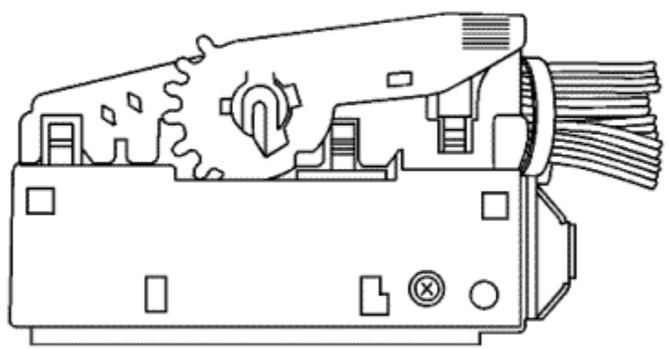

1. Locate the assist lever on the top of the connector. Move the assist lever to the forward position.

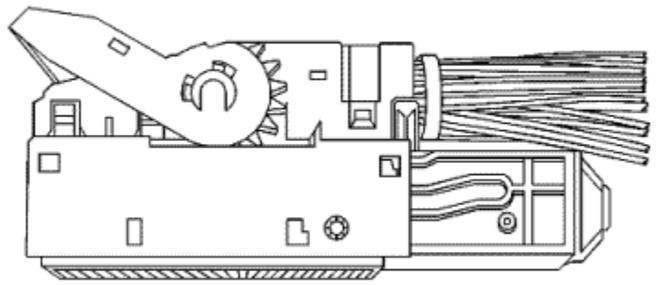

2. Disconnect the connector from the component.

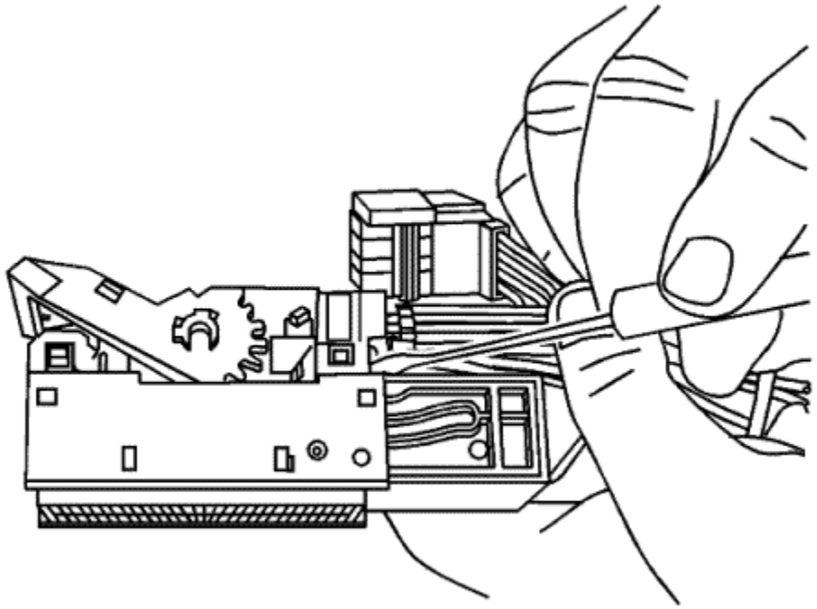

3. Locate the dress cover locking tabs at the corners of the connector. Use a small flat-blade tool to release the locking tabs and remove the dress cover.

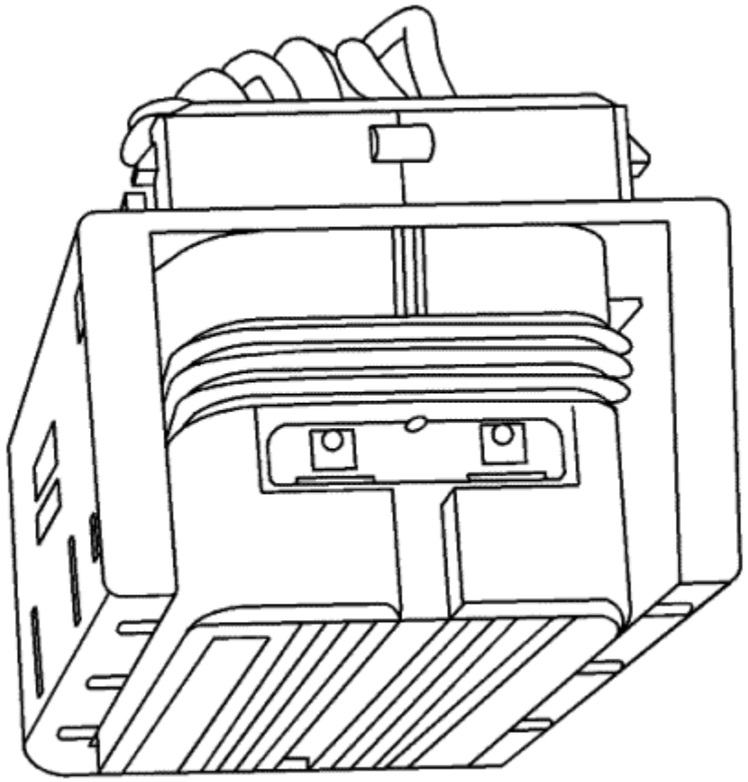

4. The terminal positive assurance (TPA) is located in the front of the connector.

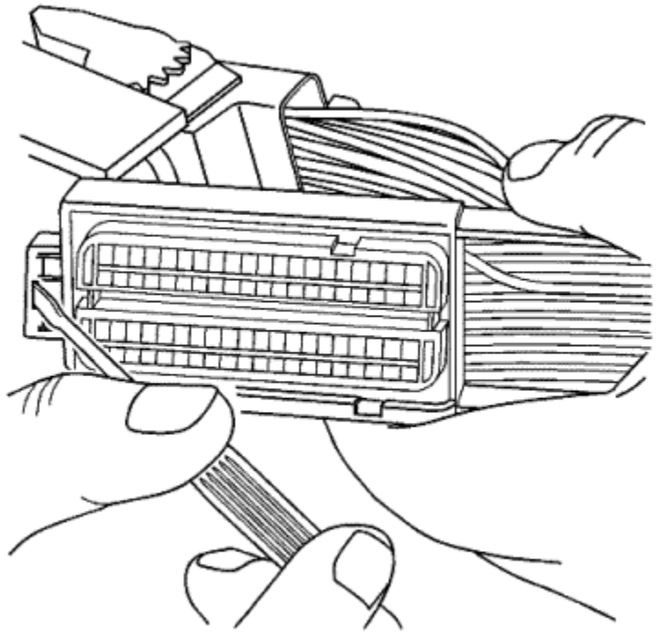

5. Use a small flat-blade tool to remove TPA from the connector.

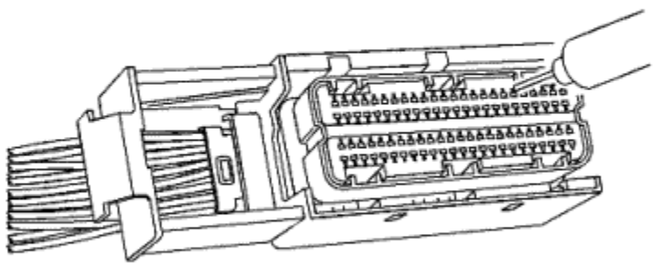

6. Use the J-38125-213 or the J-38125-556 tool to release the terminals by inserting the tool into the terminal release cavity.

7. While holding the removal tool in place, gently pull the wire out of the back of the connector. Always remember never use force when pulling a terminal out of a connector.
8. Repair the terminal by following the Repairing Connector Terminals : Terminated Lead Repair procedure.
9. Insert the repaired terminal back into the cavity. Repeat the diagnostic procedure to verify the repair and reconnect the connector bodies.

   Note: Ensure that the dress cover and connector body are both in the released position before reassembling. Failure to do so may cause damage to the connector and component.

10. Reconnect the connector bodies.

© Copyright Chevrolet. All rights reserved

Delphi Connectors - Weather Pack

Special Tools

- *EL-38125-580* Terminal Release Tool Kit
- *J-38125-10A* Terminal Release Tool

For equivalent regional tools, refer to Special Tools .

Terminal Removal Procedure

The following is the proper procedure for the repair of Weather Pack® Connectors.

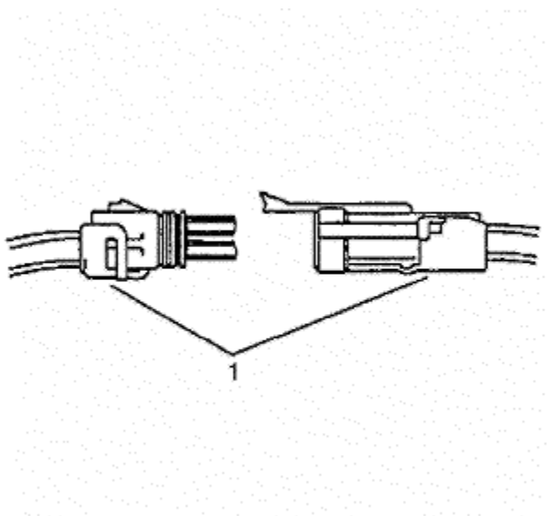

1. Separate the connector halves (1).
2. Open the secondary lock. A secondary lock aids in terminal retention and is usually moulded to the connector (1).
3. Grasp the wire and push the terminal to the forward most position. Hold the wire in this position.

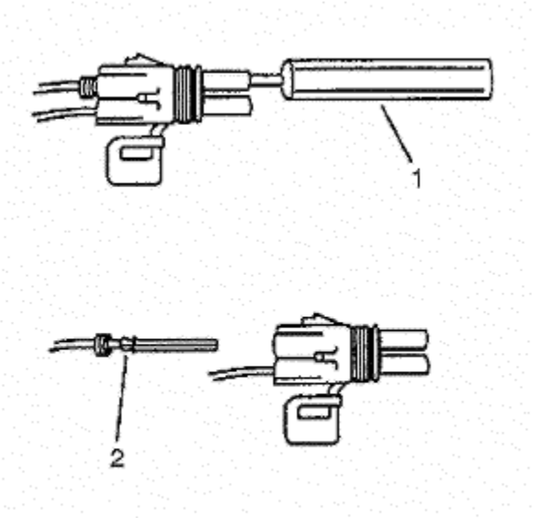

4. Insert the Weather Pack® terminal removal tool J-38125-10A into the front (mating end) of the connector cavity until it rests on the cavity shoulder (1).
5. Gently pull on the wire to remove the terminal through the back of the connector (2).

   Note: Never use force to remove a terminal from a connector.

6. Inspect the terminal and connector for damage. Repair as necessary. Refer to Repairing Connector Terminals : Terminated Lead Repair .
7. Reform the lock tab (2) and reset terminal in connector body.
8. Close secondary locks and join connector halves.
9. Verify that circuit is complete and working satisfactorily.
10. Perform system check.
11. Repair the terminal by following the Repairing Connector Terminals : Terminated Lead Repair procedure.
12. Insert the repaired terminal back into the cavity. Repeat the diagnostic procedure to verify the repair and reconnect the connector bodies.

© Copyright Chevrolet. All rights reserved

Delphi Connectors - Push To Seat

Special Tools

EL-38125-580 Terminal Release Tool Kit

For equivalent regional tools, refer to Special Tools .

Terminal Removal Procedure

Follow the steps below in order to repair push to seat connectors.

1. Remove the terminal position assurance (TPA) device, the connector position assurance (CPA) device, and/or the secondary lock.

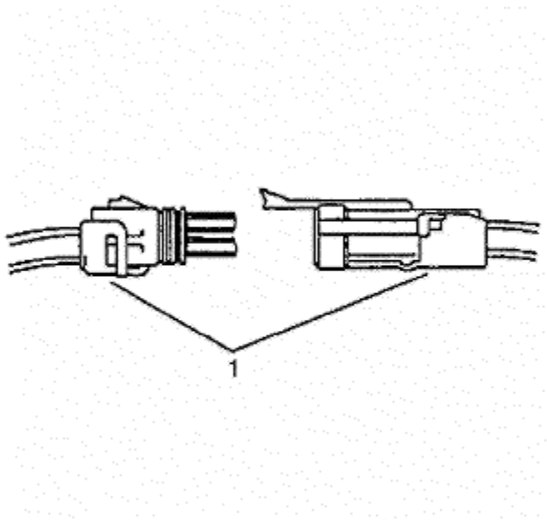

2. Separate the connector halves (1).

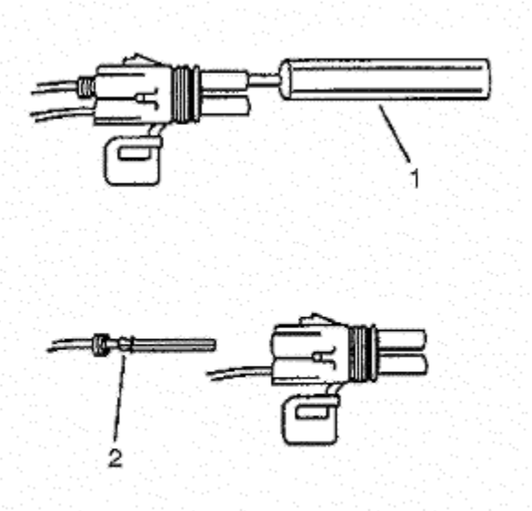

3. Use the proper pick or removal tool (1) in order to release the terminal.
4. Gently pull the cable and the terminal (2) out of the back of the connector.

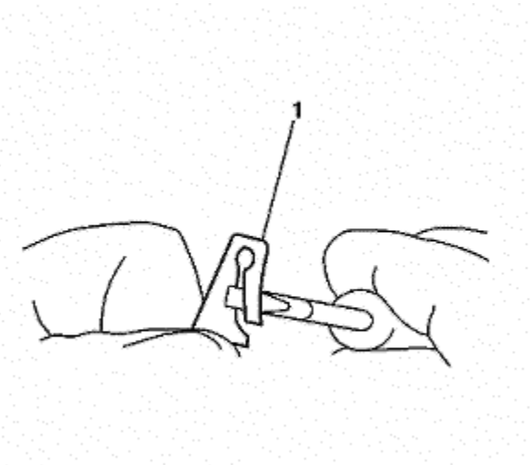

5. Re-form the locking device if you are going to reuse the terminal (1).
6. Repair the terminal by following the Repairing Connector Terminals : Terminated Lead Repair procedure.
7. Insert the repaired terminal back into the cavity. Repeat the diagnostic procedure to verify the repair and reconnect the connector bodies.

Terminal Insertion Procedure

1. In order to reuse a terminal or lead assembly, refer to Wiring Repairs .
2. Ensure that the cable seal is kept on the terminal side of the splice.

3. Insert the lead from the back until it catches.
4. Install the TPA, CPA, and/or the secondary locks.

© Copyright Chevrolet. All rights reserved

Delphi Connectors - Pull To Seat

Special Tools

EL-38125-580 Terminal Release Tool Kit

For equivalent regional tools, refer to Special Tools .

Terminal Removal Procedure

If the terminal is visibly damaged or is suspected of having a faulty connection, the terminal should be replaced.

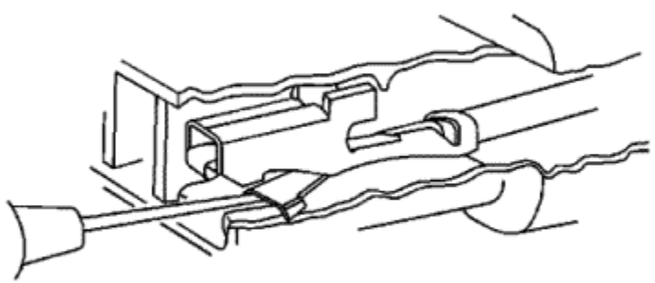

Follow the steps below in order to repair pull-to-seat connectors:

1. Remove the connector position assurance (CPA) device and/or the secondary lock.
2. Disconnect the connector from the component or separate the connectors for in-line connectors.
3. Remove the terminal position assurance (TPA) device.
4. Review the connector end view to determine the correct test probe and release tool.
5. Insert the release tool into the front of the connector body.
6. Grasp the wire at the back of the connector body and gently push the terminal out the front of the connector body.
7. Repair the terminal by following the Repairing Connector Terminals : Terminated Lead Repair procedure.
8. Insert the repaired terminal back into the cavity. Repeat the diagnostic procedure to verify the repair and reconnect the connector bodies.

Terminal Insertion Procedure

1. Align the terminal and pull the wire from the back of the connector in order to seat the terminal.
2. If the connector is outside of the passenger compartment, apply dielectric grease to the connector.
3. Install the TPA, CPA, and/or the secondary locks.

© Copyright Chevrolet. All rights reserved

Delphi Connectors - Micro-Pack 100W

Special Tools

- *EL-38125-580* Terminal Release Tool Kit
- *J-38125-12A* Terminal Release Tool

For equivalent regional tools, refer to Special Tools .

Terminal Removal Procedure

There are 2 styles of Micro-Pack 100W connectors. These connectors are very similar but use different terminals and have some minor physical differences also.

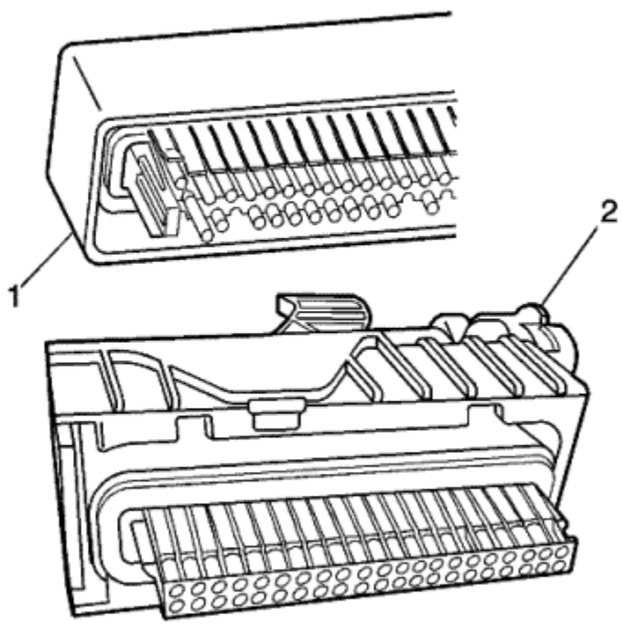

The first connector design of the Micro-Pack 100W (1) has a white connector interface that holds the terminals. The second design of the Micro-Pack 100W (2) has a grey

interface to hold the terminals. Also, the first design has terminal cavities that are further apart (3 mm centreline) and offset from the other row of terminal cavities in the connector. The second design has terminals cavities that are closer together (2.54 mm centreline) and aligned vertically. One other way to identify the second design is the thin strip of material that runs along the outside of the cavities.

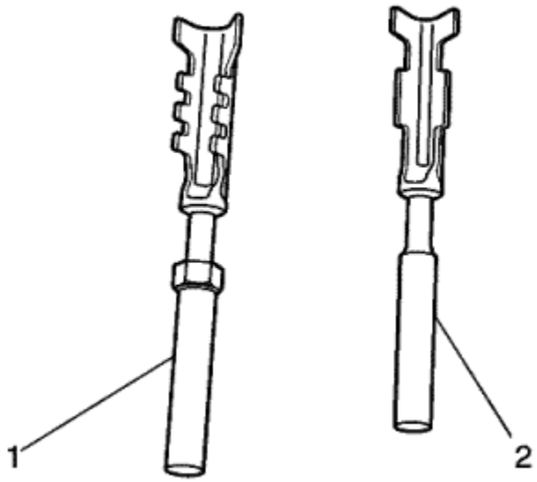

Note: There are 2 styles of Micro-Pack 100W terminals which are very similar. Ensure that you have the correct terminal before crimping the new terminal to the wire. The first design connector uses the longer terminal (1) that has a raised area in front of the recess in the terminal. The second design connector uses the shorter terminal without the raised area.

Follow the steps below in order to remove terminals from Micro-Pack 100W connectors. Some Micro-Pack 100W connector disassembly procedures will vary. Use this procedure as a guide.

1. Disconnect the connector from the component.

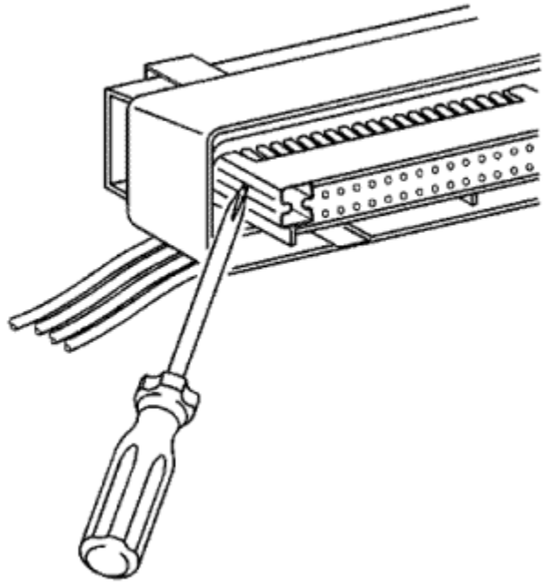

2. Locate the nose piece locking tabs that are positioned on the side of the connector nose piece. The connector nose piece acts as a terminal positive assurance (TPA) and may be referred to as such.

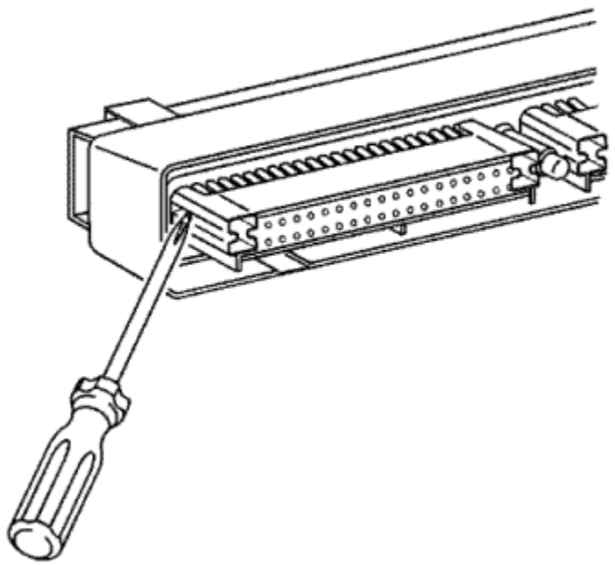

3. Use a small flat-blade tool to push in one of the locking tabs while gently pulling on the same side of the nose piece.
4. Repeat the procedure for the other locking tab and remove the nose piece.
5. Remove the wire dress cover. The following is a general procedure for wire dress cover removal. Use this procedure as a guide, some dress cover removal procedures may vary.

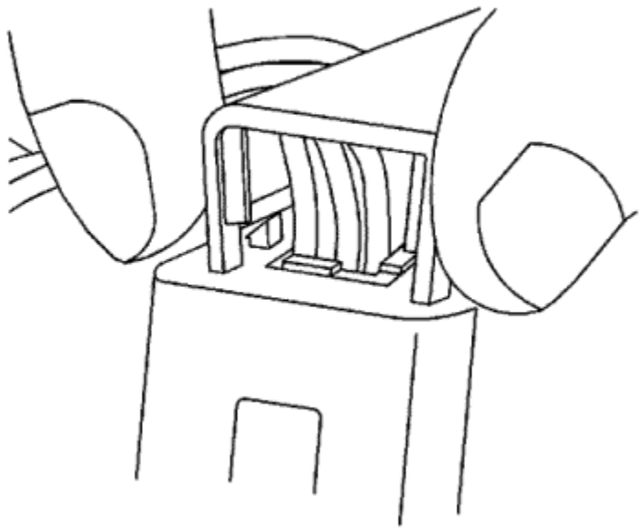

6. Use fingers to squeeze the 2 locking legs of the cover.

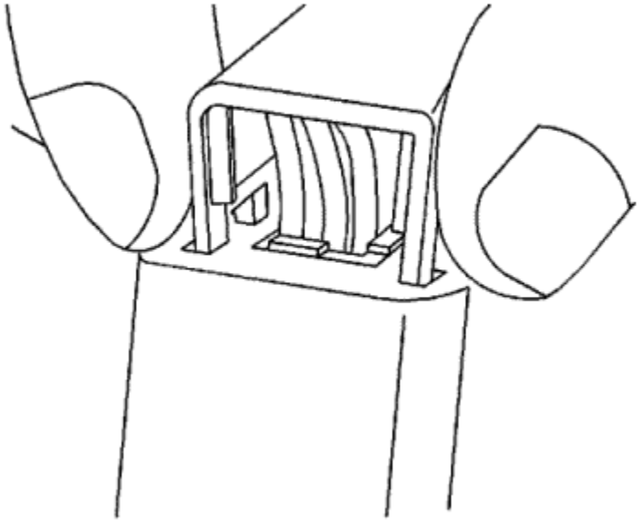

7. Apply pressure and gently rock the cover until one locking leg is unseated.

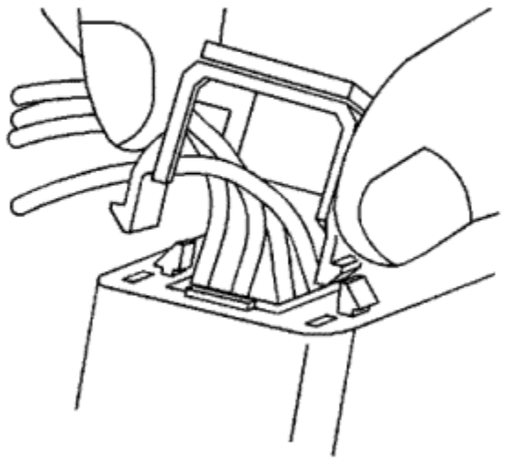

8. Continue to apply pressure and rock the cover until the second locking leg is unseated. Repeat procedure for the other side of the dress cover and remove the cover.

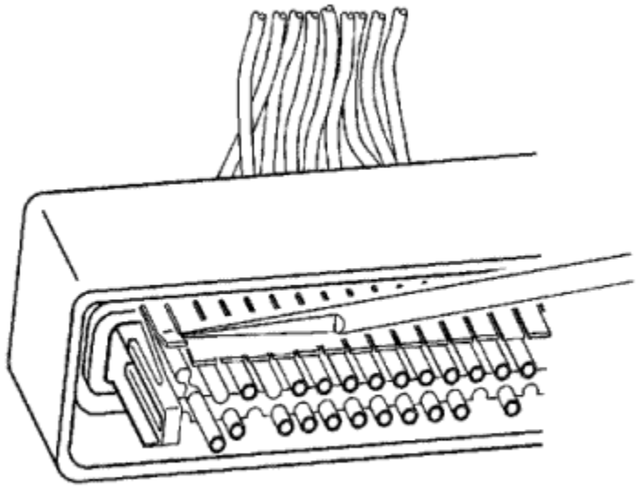

9. Use J-38125-12A to gently lift the terminal retaining tab while gently pulling the wire out of the back of the connector. Always remember never use force when pulling a terminal out of a connector.
10. If the terminal is severely bent or damaged, it may be possible on some connectors to push the wire out of the front of the connector instead of pulling it through. This will prevent damage to the internal seals of the connector. Once the terminal is pushed out of the connector, cut the wire as close to the terminal as possible and pull the wire through the connector.
11. Repair the terminal by following the Repairing Connector Terminals : Terminated Lead Repair procedure.
12. Insert the repaired terminal back into the cavity. Repeat the diagnostic procedure to verify the repair and reconnect the connector bodies.

Terminal Insertion Procedure

After the terminal is crimped to the wire perform the following procedure in order to replace Micro-Pack 100 terminals.

1. Slide the new terminal into the correct cavity at the back of the connector.
2. Push the terminal into the connector until it locks into place. The new terminal should be even with the other terminals. Ensure that the terminal is locked in place by gently pulling on the wire.
3. To assemble the connector, reverse the Terminal Removal Procedure.

© Copyright Chevrolet. All rights reserved

Delphi Connectors - Micro .64

Special Tools

- *EL-38125-580* Terminal Release Tool Kit
- *J-38125-21* Terminal Release Tool

For equivalent regional tools, refer to Special Tools .

Terminal Removal Procedure

Follow the steps below in order to remove terminals from Micro .64 connectors.

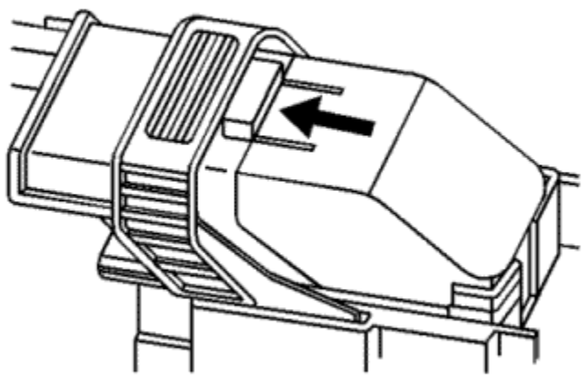

1. Locate the lever lock on the wire dress cover. While depressing the lock, pull the lever over and past the lock. The lever lock may be located on the top or sides of the

wire dress cover.

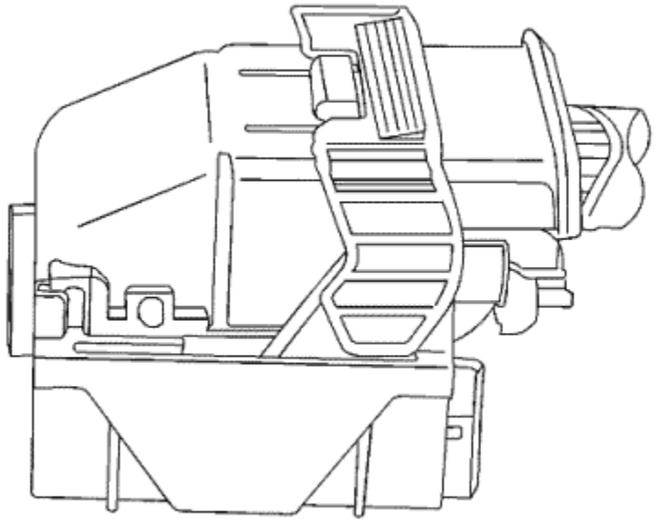

2. View of a typical Micro 64 connector.

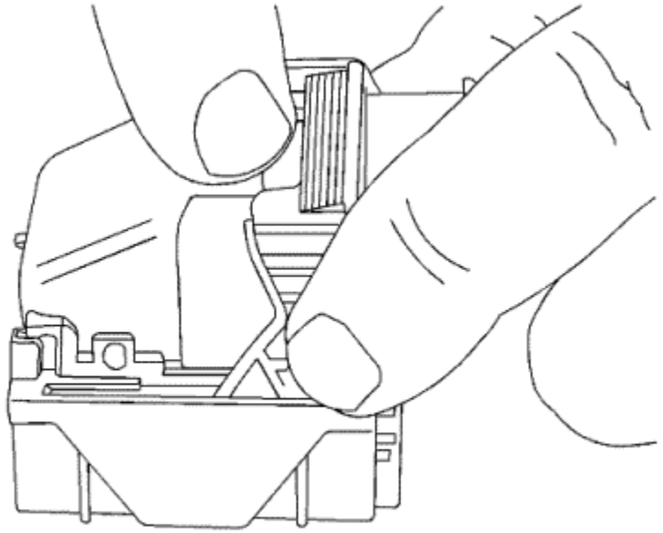

3. Depress the lock and pull the lever over and past the lock.

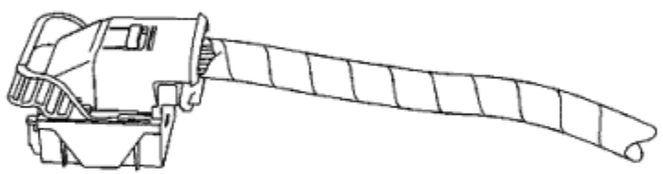

4. View of the connector when released from the component.

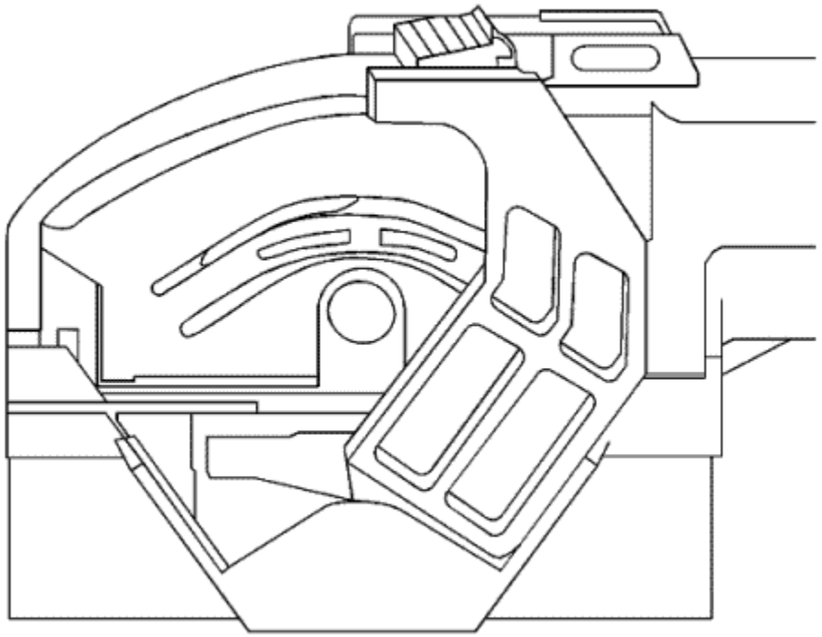

5. View of another type of Micro 64 connector.

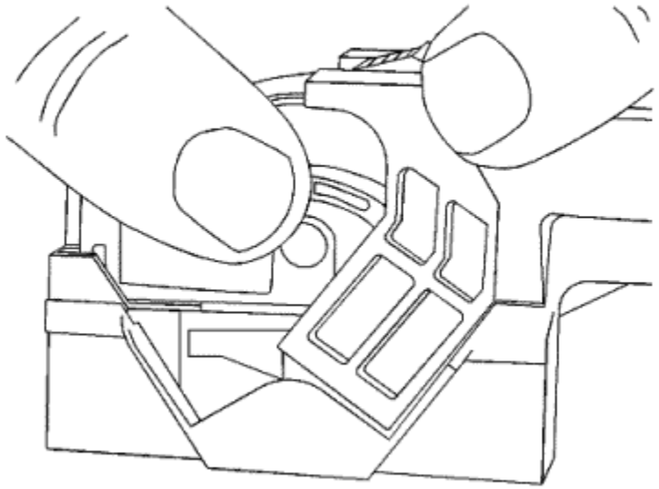

6. Depress the locks that are located on both sides of the wire dress cover and pull the lever over and past the locks.

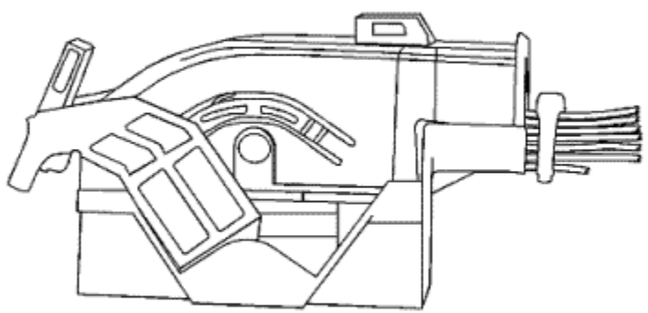

7. View of the connector when released from the component.

8. Disconnect the connector from the component.

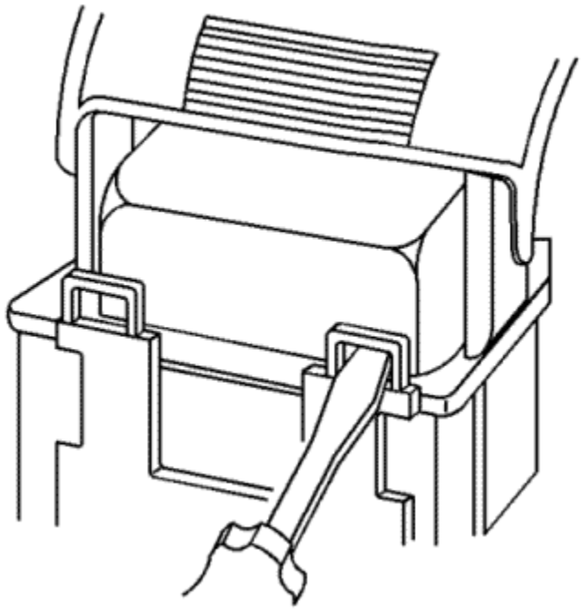

9. Locate the dress cover locking tabs at the front of the connector. Using a small flat-blade tool push down on one of the locking tabs and pull the cover up until the dress cover releases. Repeat this procedure for the other locking tab.
10. Once the front 2 locks are unlocked, lift the front of the dress cover and pull it forward.

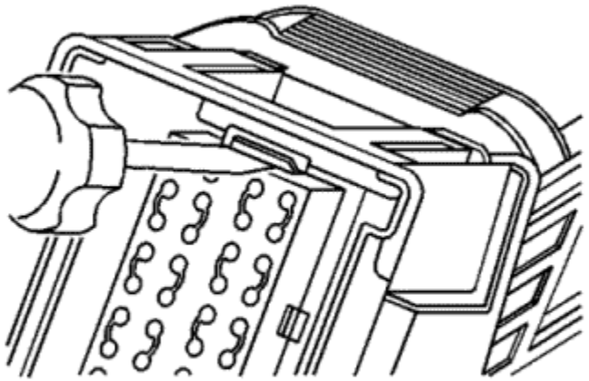

Note: Always use care when removing a terminal position assurance (TPA) in order to avoid damaging it.

11. Remove the TPA by inserting a small flat-blade tool into the small slot on the TPA and pushing down until the TPA releases. Gently prise the TPA out of the connector.

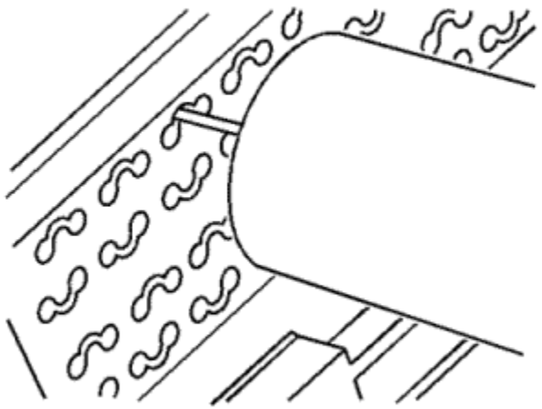

Note: Be careful not to angle or rock the J-38125-21 tool when inserting it into the connector, as the tool may break.

12. Insert the J-38125-21 tool into the round canal between the terminals cavities at the front of the connector.

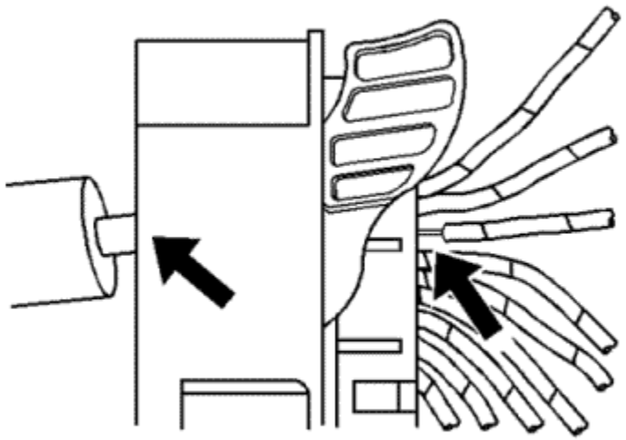

13. While holding the removal tool in place, gently pull the wire out of the back of the connector. Always remember never use force when pulling a terminal out of a connector.
14. Repair the terminal by following the Repairing Connector Terminals : Terminated Lead Repair procedure.
15. Insert the repaired terminal back into the cavity. Repeat the diagnostic procedure to verify the repair and reconnect the connector bodies.

© Copyright Chevrolet. All rights reserved

Delphi Connectors - 12-Way

Special Tools

- *EL-38125-580* Terminal Release Tool Kit
- *J-38125-12A* Terminal Release Tool

For equivalent regional tools, refer to Special Tools .

Terminal Removal Procedure

Follow the steps below in order to remove terminals from the connector.

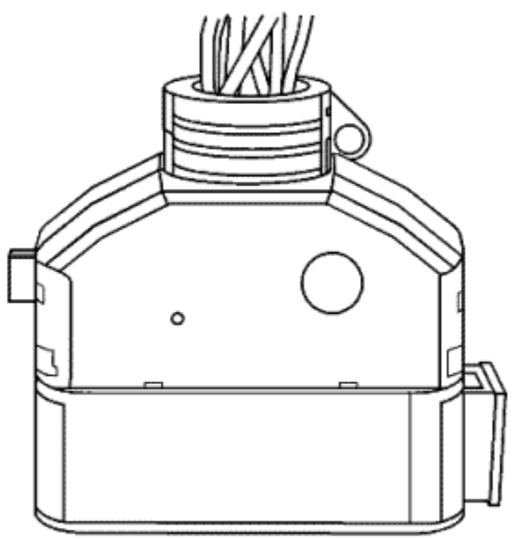

1. Locate the lever lock on the wire dress cover. Remove the connector position assurance (CPA) and slide the lever lock away from the connector body.

2. Disconnect the connector from the component.

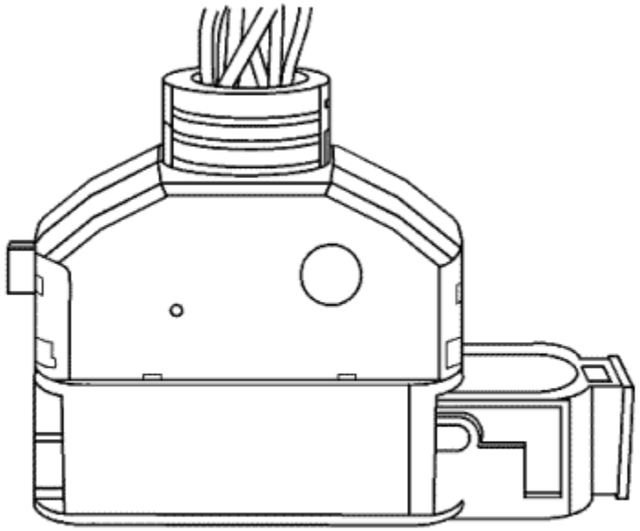

3. Locate the dress cover locking tabs on the dress cover of the connector. Using a small flat-blade tool release all of the locking tabs.

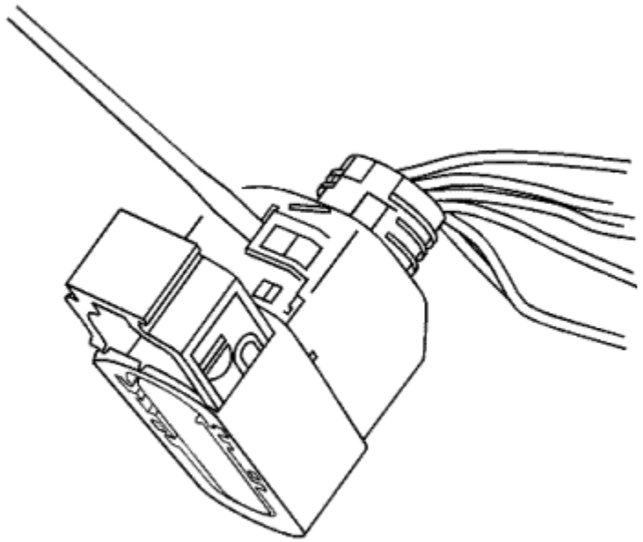

4. Release the lower wire dress cover locking tab.

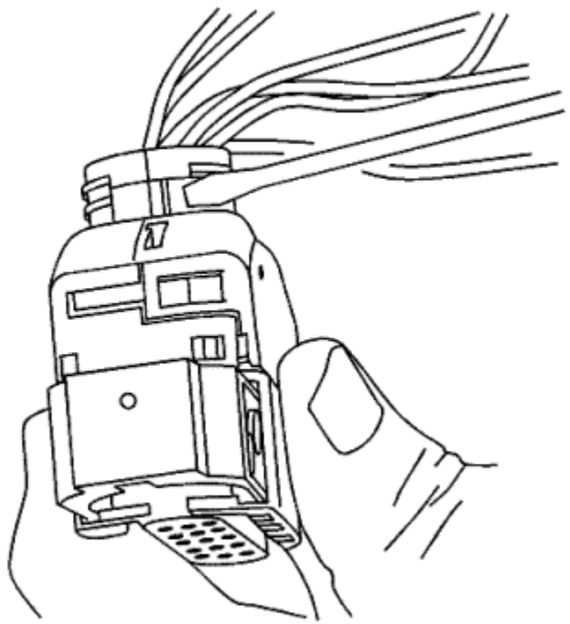

5. Release the upper wire dress cover locking tab.

6. Once the locks are unlocked, lift the dress cover off.

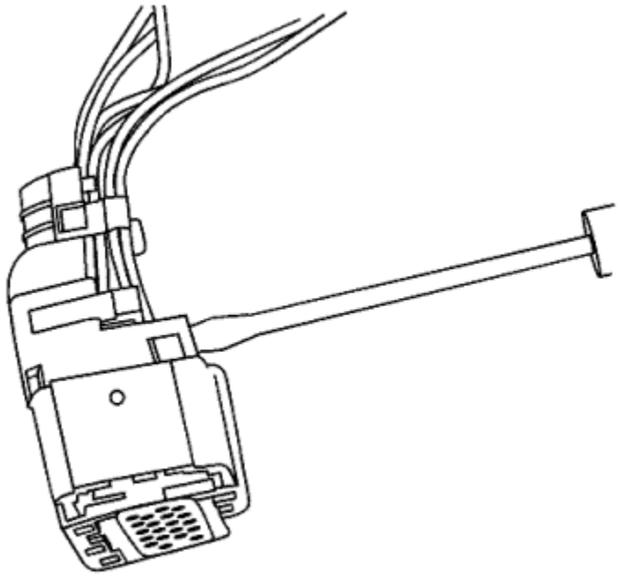

Note: Always use care when removing a terminal position assurance (TPA) in order to avoid damaging it.

7. Remove the TPA by inserting a small flat-blade tool into the locking tabs on both sides of the TPA. Gently prise the TPA out of the connector.

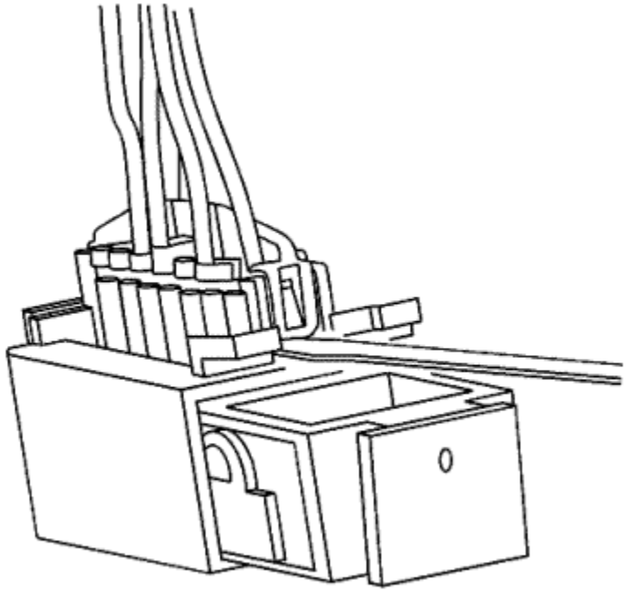

8. Remove the nose piece by inserting a small flat-blade tool into the locking tabs on both sides of the nose piece. Gently prise the nose piece out of the connector.

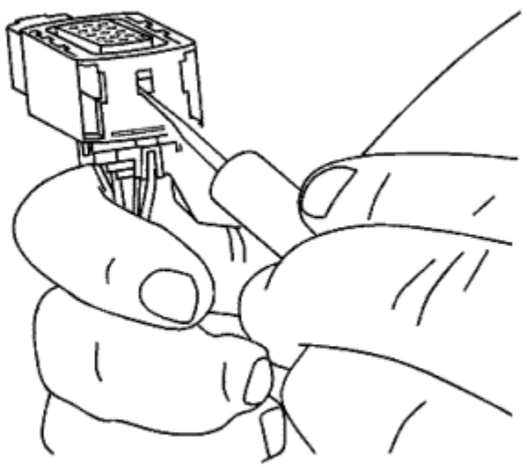

9. Insert the J-38125-12A tool to release the terminals by inserting the tool into the terminal release cavity.

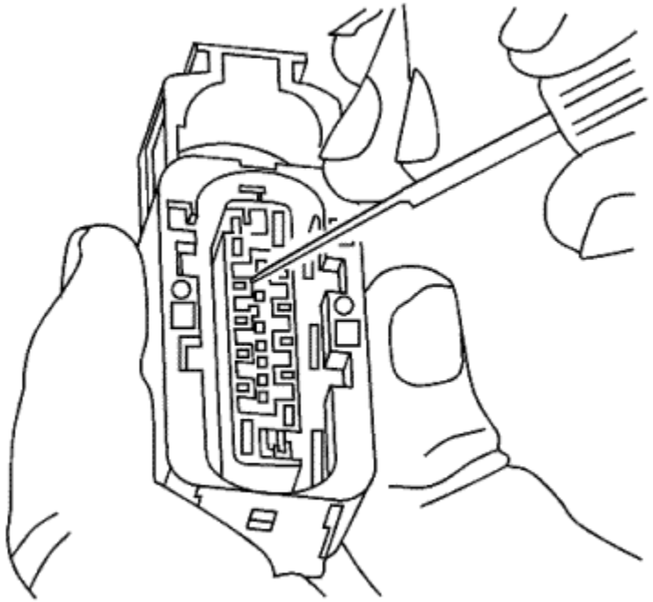

10. While holding the removal tool in place, gently pull the wire out of the back of the connector. Always remember never use force when pulling a terminal out of a connector.
11. Repair the terminal by following the Repairing Connector Terminals : Terminated Lead Repair procedure.
12. Insert the repaired terminal back into the cavity. Repeat the diagnostic procedure to verify the repair and reconnect the connector bodies.

© Copyright Chevrolet. All rights reserved

Delphi Connectors - Steering Gear

Removal Procedure

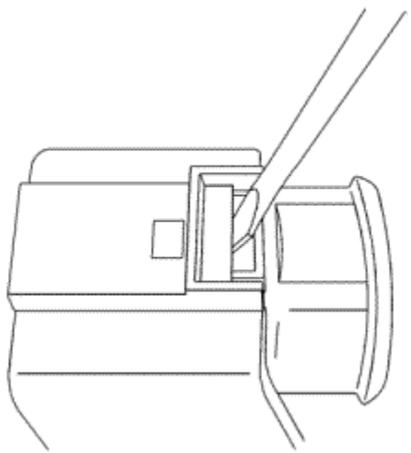

1. Use a small flat-bladed tool to release the locking tab on the connector.

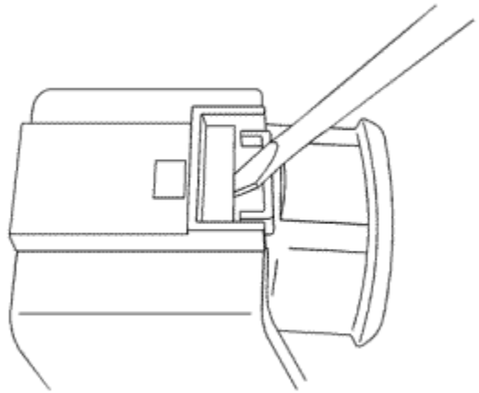

2. Push down the locking tab to release the connector. The small flat-bladed tool may need to be pushed down and angled back slightly to depress the locking tab. Pull on the connector body while releasing the locking tab to disconnect the connector.

© Copyright Chevrolet. All rights reserved

FCI Connectors - Lever Lock

Special Tools

- *EL-38125-580* Terminal Release Tool Kit
- *J-38125-556* Terminal Release Tool
- *J-38125-560* Terminal Release Tool

For equivalent regional tools, refer to Special Tools .

Terminal Removal Procedure

Follow the steps below in order to remove terminals from the connector.

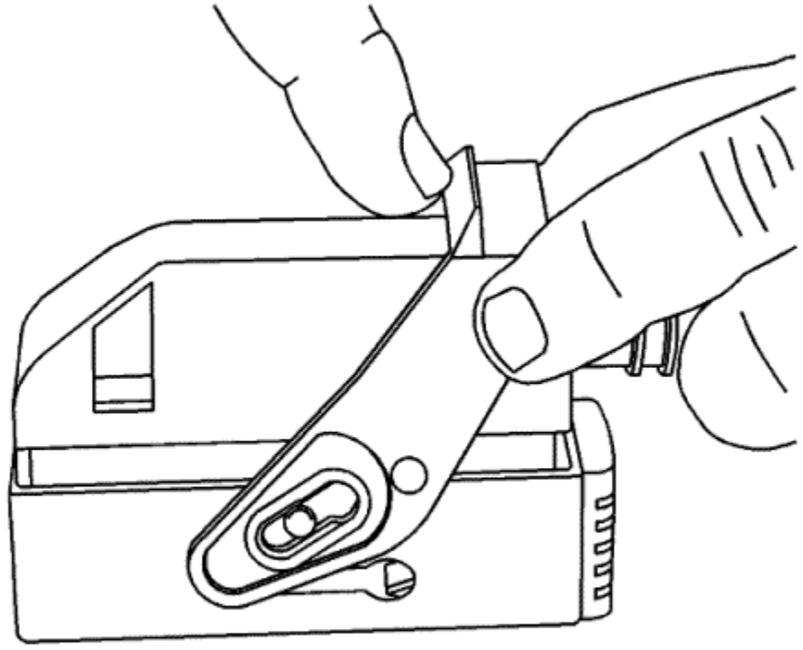

1. Slide the lever lock forward while pressing down on the lever lock release tab.
2. The release tab is located on the top of the wiredress cover.

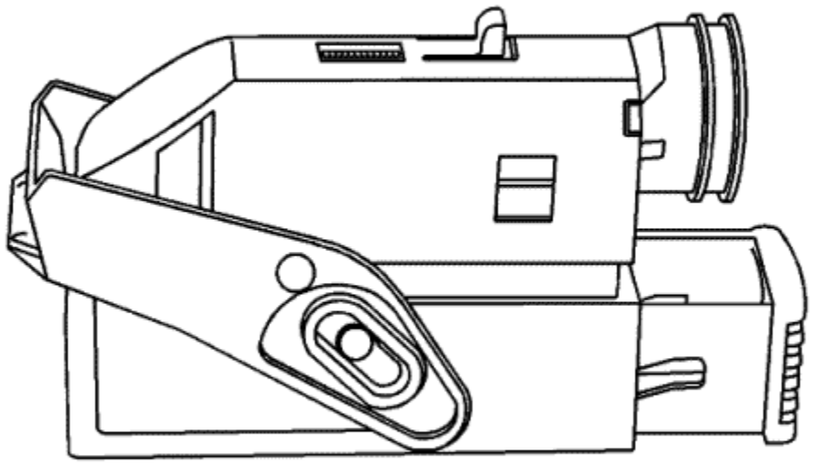

3. View of connector in released position.
4. Disconnect the connector from the component.
5. Locate the dress cover locking tabs at the corners of the dress cover. Use a small flat-blade tool to release the locking tabs and remove the dress cover.

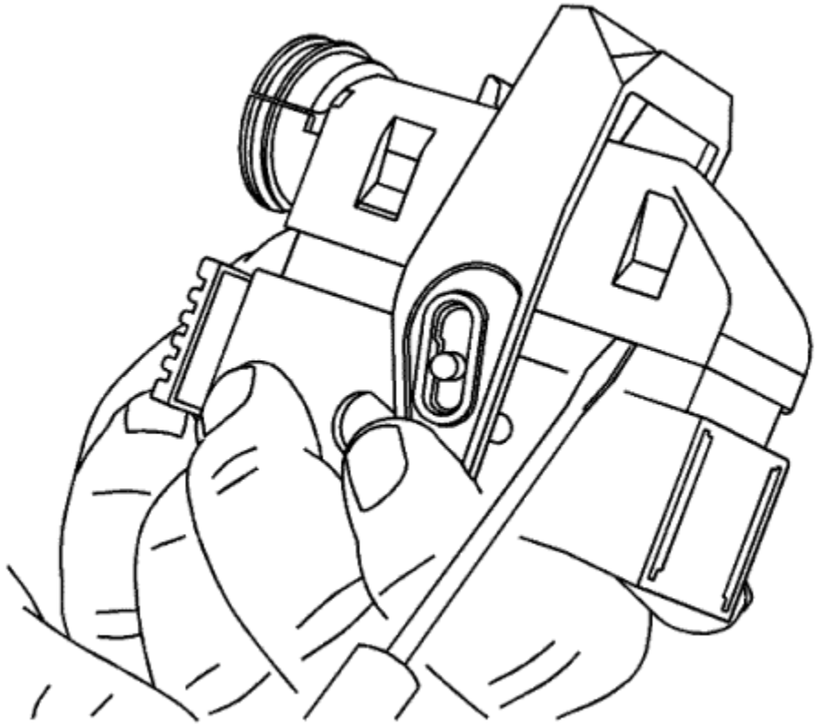

6. Use a small flat-blade tool to slide the terminal position assurance (TPA) up one notch on both ends of the connector. The TPA is located underneath the wire dress cover.

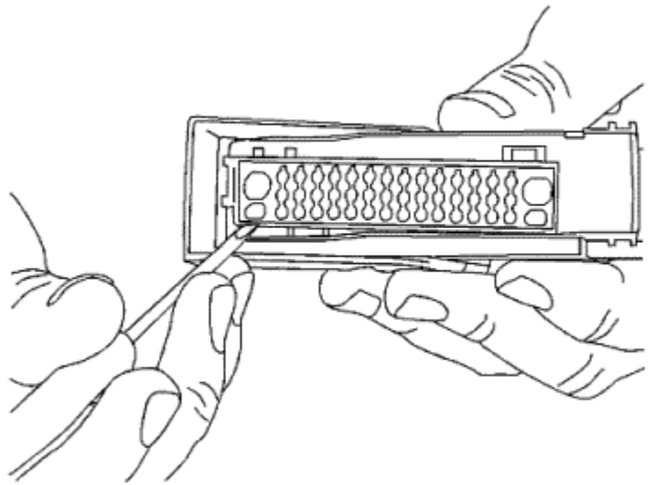

7. For the larger terminals insert the J-38125-556 tool to release the terminals by inserting the tool into the terminal release cavity. For the smaller terminals insert the J-38125-560 tool to release the terminals by inserting the tool into the terminal release cavity.

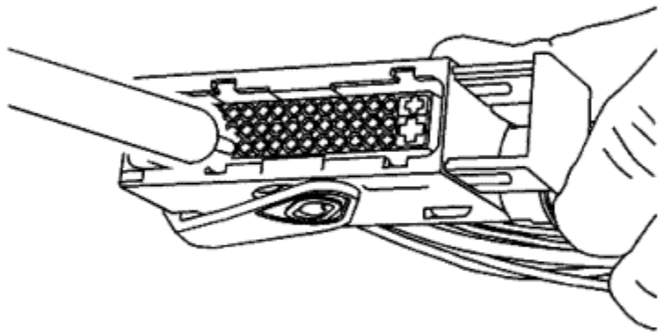

8. While holding the removal tool in place, gently pull the wire out of the back of the connector. Always remember never use force when pulling a terminal out of a connector.
9. Repair the terminal by following the Repairing Connector Terminals : Terminated Lead Repair procedure.
10. Insert the repaired terminal back into the cavity. Repeat the diagnostic procedure to verify the repair and reconnect the connector bodies.

© Copyright Chevrolet. All rights reserved

FCI Connectors - SIR

Removal Procedure

Note: The orange connector position assurance (CPA) must be released first to disconnect or to connect the connector.

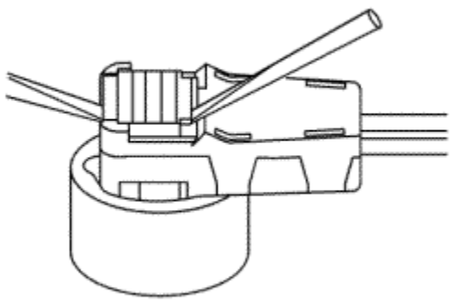

1. Lift the orange CPA vertically (avoid lifting on an angle to the connector) approximately 4 mm to release the connector. Use a small flat-bladed tool to help release the orange CPA. The orange CPA can also be released manually without any tools.

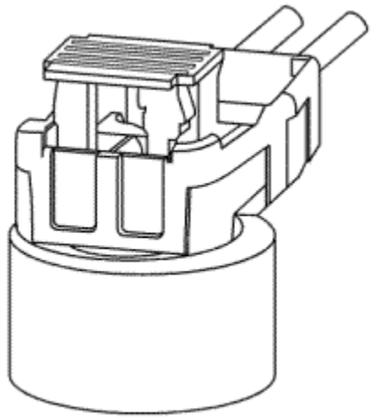

2. Grab the connector on both sides and lift the connector vertically to disconnect the connector.

Installation Procedure

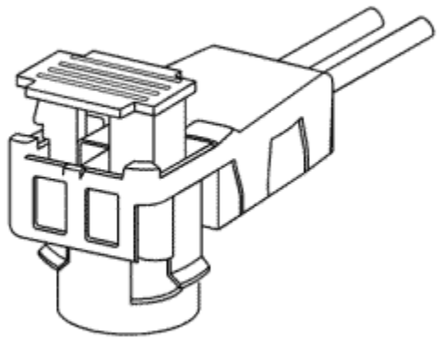

1. Lift the orange CPA vertically approximately 4 mm before installing the connector. Use a small flat-bladed tool to help release the orange CPA. The orange CPA can also be released manually without any tools.

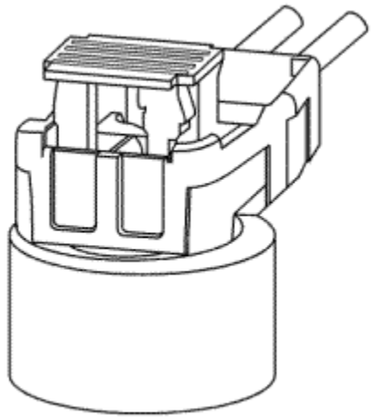

2. Line up the connector key tabs with the initiator key slots. Grab the connector on both sides and push the connector down into the initiator connector sub assembly until fully seated.

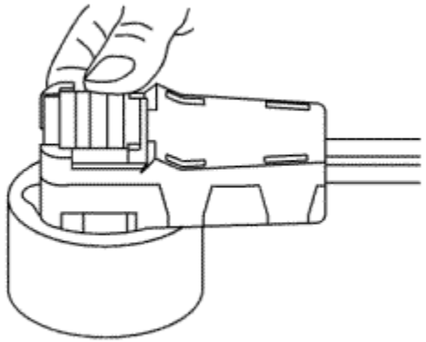

3. After the connector is fully seated, push down the orange CPA with your thumb. Push down until the orange CPA is touching the yellow cover on the connector.

© Copyright Chevrolet. All rights reserved

FEP Connectors - Steering Gear

Removal Procedure

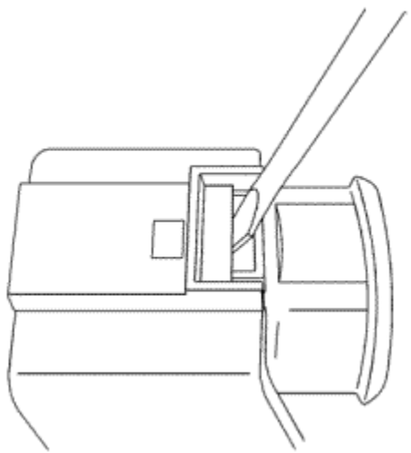

1. Use a small flat-bladed tool to release the locking tab on the connector.

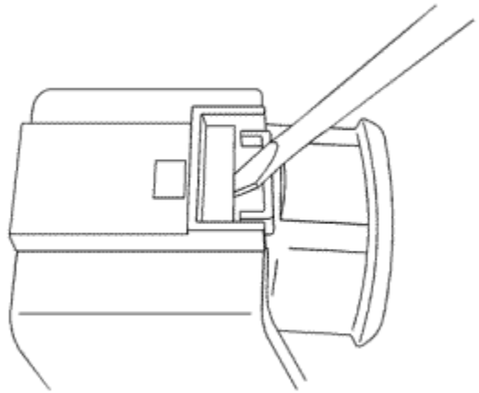

2. Push down the locking tab to release the connector. The small flat-bladed tool may need to be pushed down and angled back slightly to depress the locking tab. Pull on the connector body while releasing the locking tab to disconnect the connector.

© Copyright Chevrolet. All rights reserved

JST Connectors

Special Tools

- *EL-38125-580* Terminal Release Tool Kit
- *EL-38125-553* Terminal Release Tool

For equivalent regional tools, refer to Special Tools .

Terminal Removal Procedure

The JST connector family consists of seven unique connector housings differentiated by colour and keying. This connector family is designed to use both 0.64 and 2.8 sized terminals.

JST BCM Connector

GM Service Part #	Colour
88988806	Grey
88988837	Brown
88988838	Lt Green
88988839	Natural
88988840	Lt Blue
88988841	Black
88988842	Pink

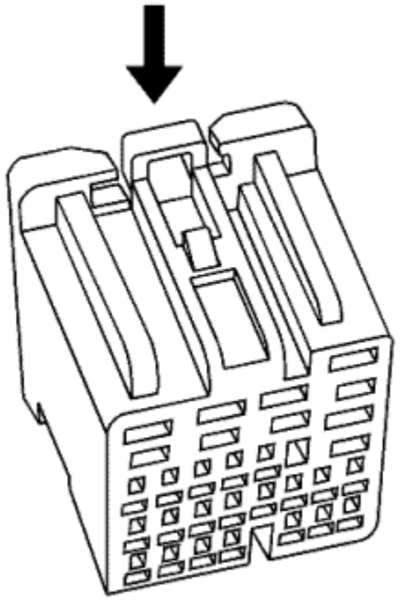

1. While depressing the lock, remove the connector from the component.

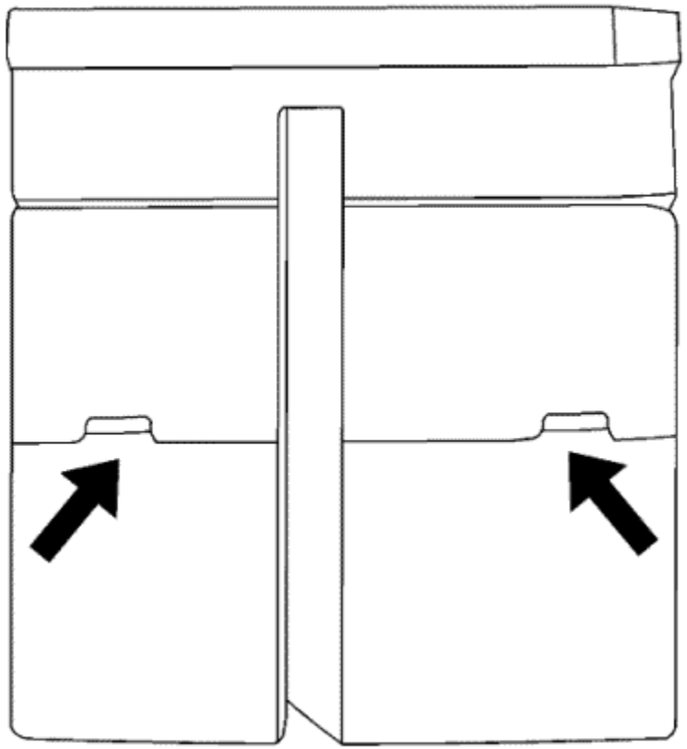

2. Unlock the terminal position assurance (TPA):
   - Position connector as shown (above) and locate TPA staging cavities.

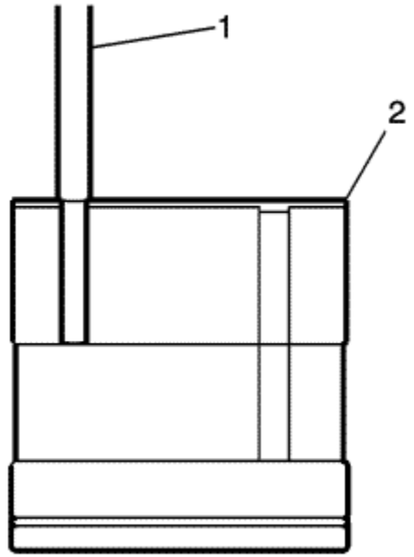

- Using connector terminal release tool J-38125-553 (1) lift the TPA into the staged position. Perform this step on both sides of the TPA.

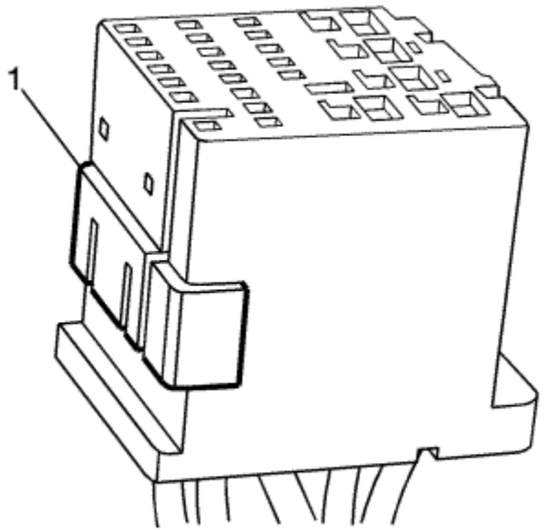

- You will feel the TPA click into place when fully extended into the staged position. The figure above shows the TPA (1) in the staged position.

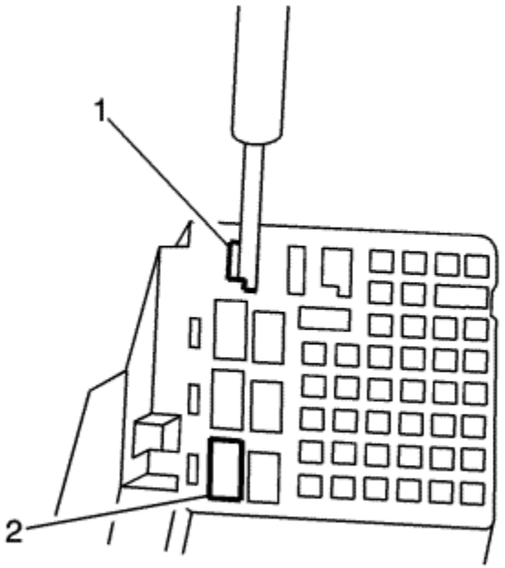

3. Release the terminal from the connector:
   - Position the connector as shown (above) and locate the terminal release entry canal (1) of the suspect terminal.
   - Insert the connector terminal release tool J-38125-553 into the entry canal with the angled side of the tool facing the connector wall containing cavity 4 (2).

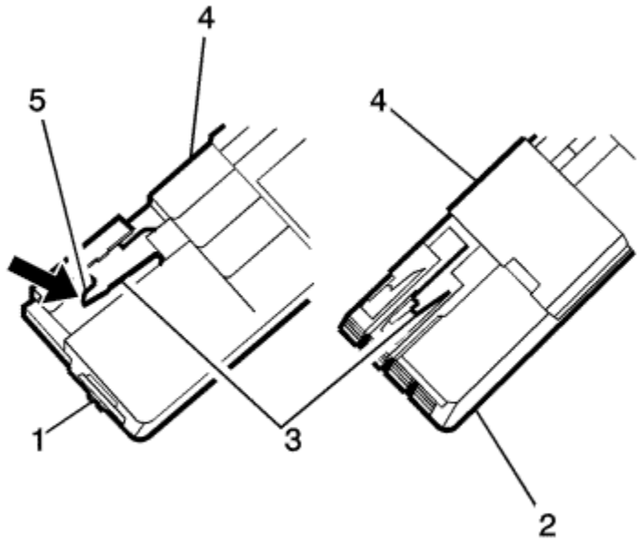

- The cavity on the left (1) is a 2.8 mm cavity and the cavity on the right (2) is a 0.64 mm cavity.
- Place the tip of the connector terminal release tool onto the connector lance (3) and deflect the lance to the right (5) to release the lock. Hold this released position.
- Holding the lance in the released position, slightly pull on the suspect terminal to remove it from the connector housing. The side TPA (4) is a secondary lock.

4. Repair the terminal by following the Repairing Connector Terminals : Terminated Lead Repair procedure.
5. Insert the repaired terminal back into the cavity. Repeat the diagnostic procedure to verify the repair and reconnect the connector bodies.

&#169© Copyright Chevrolet. All rights reserved

Kostal Connectors - Glow Plug Control Module

Special Tools

- *EL-38125-580* Terminal Release Tool Kit
- *J-38125-24* Terminal Release Tool
- *J-38125-560* Terminal Release Tool

For equivalent regional tools, refer to Special Tools .

Terminal Removal Procedure

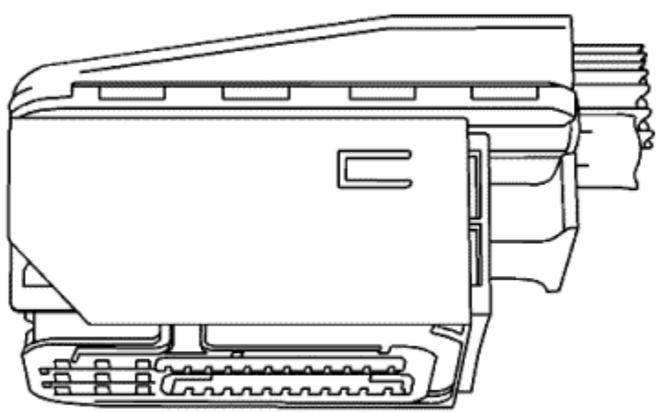

View of typical connector.

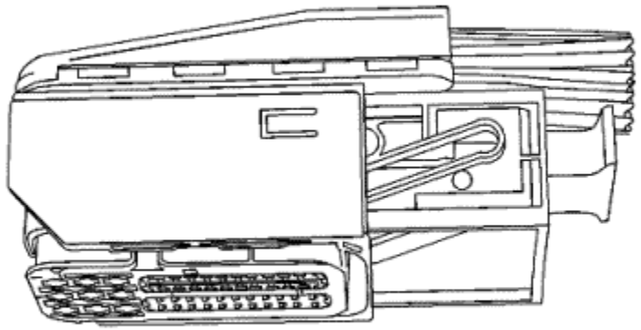

View of connector in released position.

1. Locate the assist lever at the back of the connector. Move the assist lever to the rear position.
2. Disconnect the connector from the component.

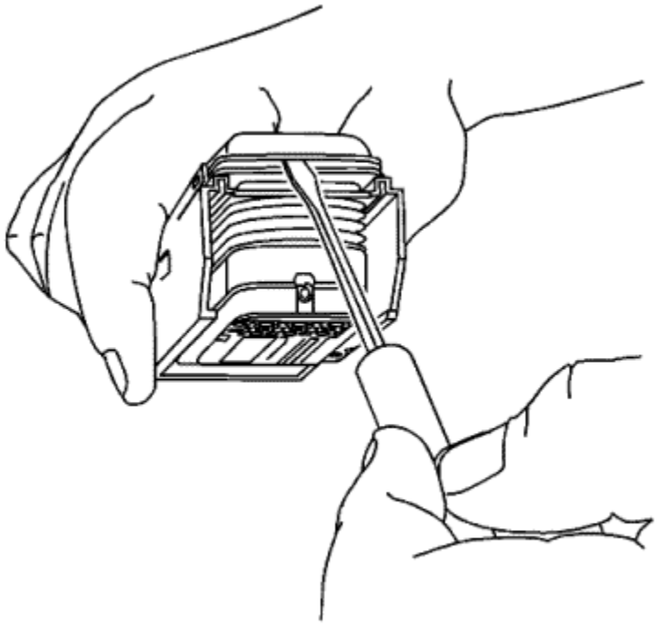

3. Use a small flat-blade tool to remove the dress cover.

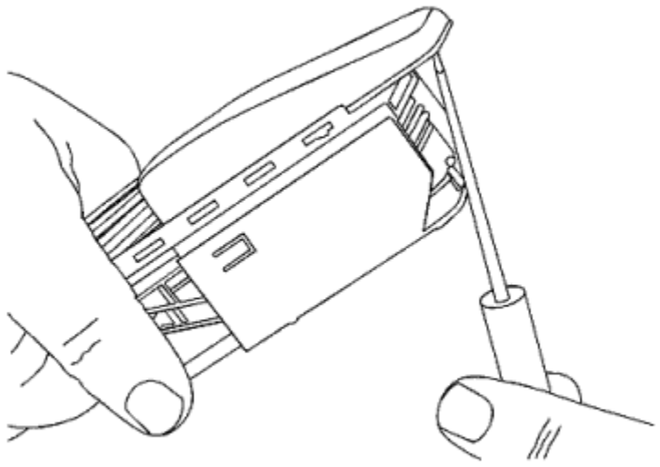

4. Slide the dress cover forward and off of the connector.

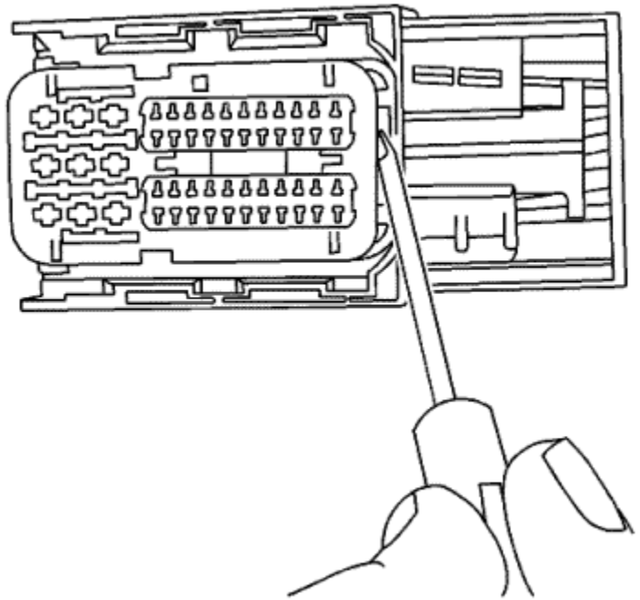

5. The terminal positive assurance (TPA) is located in the front and rear of the connector.

   Note: The front TPA cannot be removed from the connector. Only move it to the preset position.

6. Use a small flat-blade tool to move the front TPA to the preset position, outboard approximately 0.125 in. (3 mm).

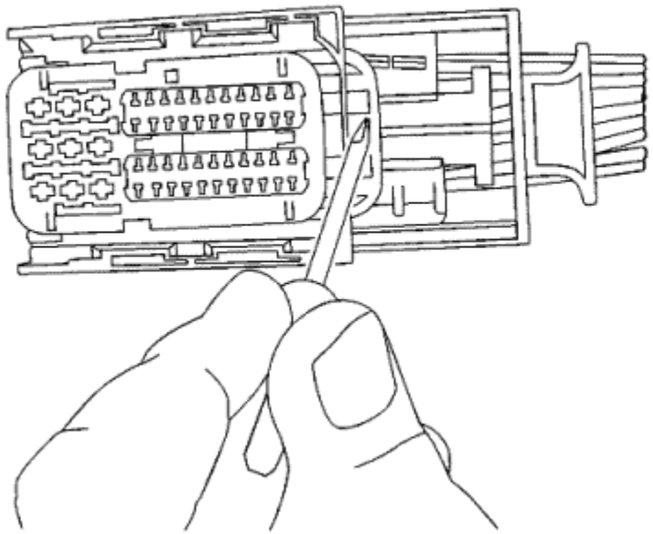

7. Use a small flat-blade tool to completely remove the rear TPA from the connector.

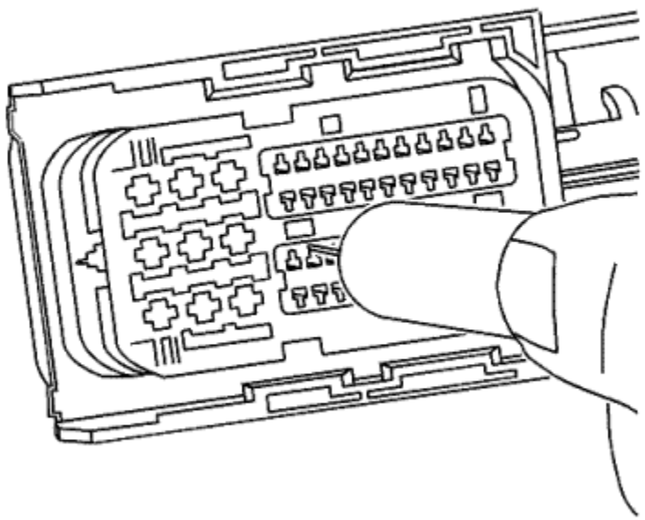

8. Use the J-38125-24 or the J-38125-560 tool to release the terminals by inserting the tool into the terminal release cavity.

9. While holding the removal tool in place, gently pull the wire out of the back of the connector. Always remember never use force when pulling a terminal out of a connector.
10. Repair the terminal by following the Repairing Connector Terminals : Terminated Lead Repair procedure.

© Copyright Chevrolet. All rights reserved

Kostal Connectors - Transmission

Special Tools

- *EL-38125-580* Terminal Release Tool Kit
- *J-38125-28* Terminal Release Tool

For equivalent regional tools, refer to Special Tools .

Terminal Removal Procedure

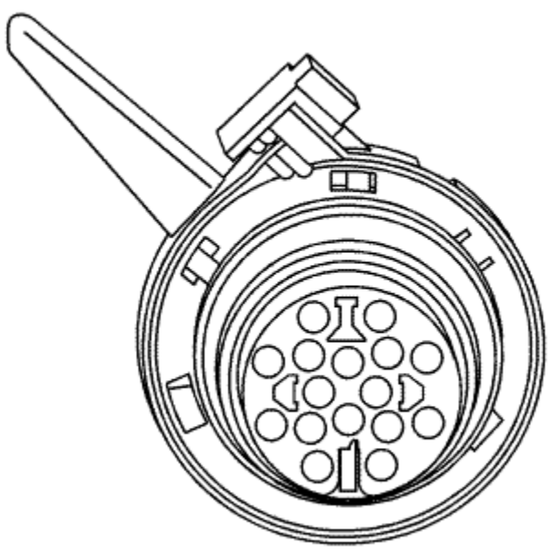

1. While depressing the lock, twist and remove the connector from the component.

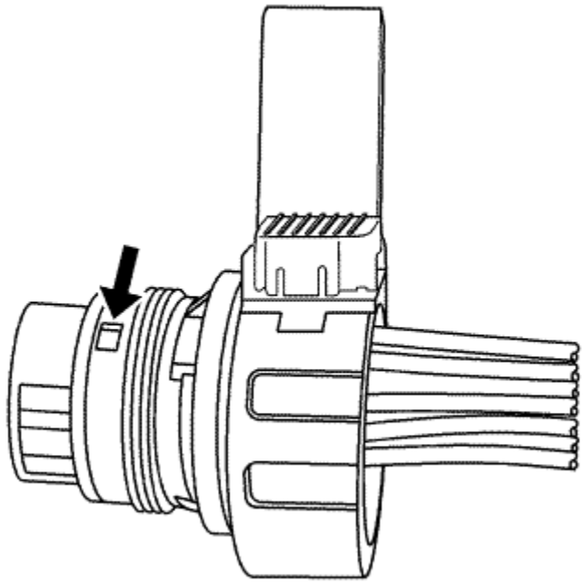

2. Locate the terminal position assurance (TPA).

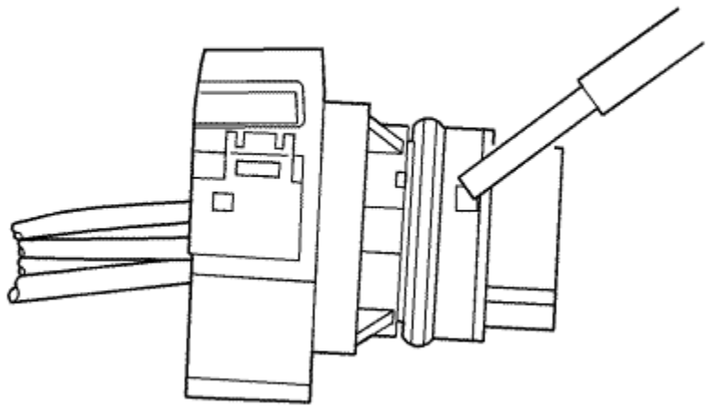

Note: The TPA cannot be removed from the connector while there are terminals present in the connector body.

3. Use a small flat-blade tool to push the TPA until it bottoms out.

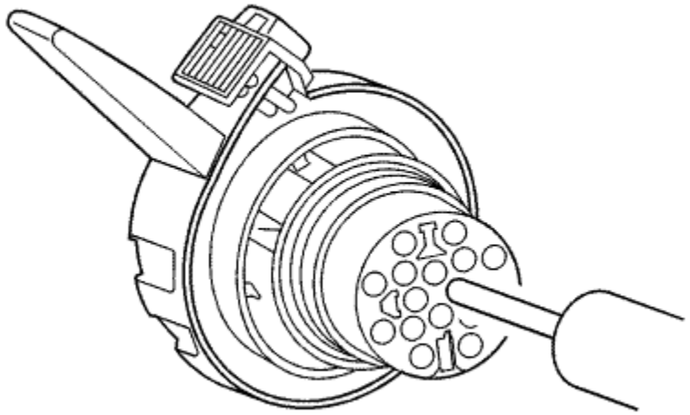

4. Use the J-38125-28 tool to release the terminals by inserting the tool into the terminal cavity as shown in the illustration.
5. While holding the removal tool in place, gently pull the wire out of the back of the connector. Always remember never use force when pulling a terminal out of a connector.
6. Repair the terminal by following the Repairing Connector Terminals : Terminated Lead Repair procedure.

Terminal Insertion Procedure

After the terminal is replaced, perform the following procedure in order to insert the terminal.

1. Slide the new terminal into the correct cavity at the back of the connector.
2. Push the terminal into the connector until it locks into place. The new terminal should be even with the other terminals. Ensure that the terminal is locked in place by gently pulling on the wire.

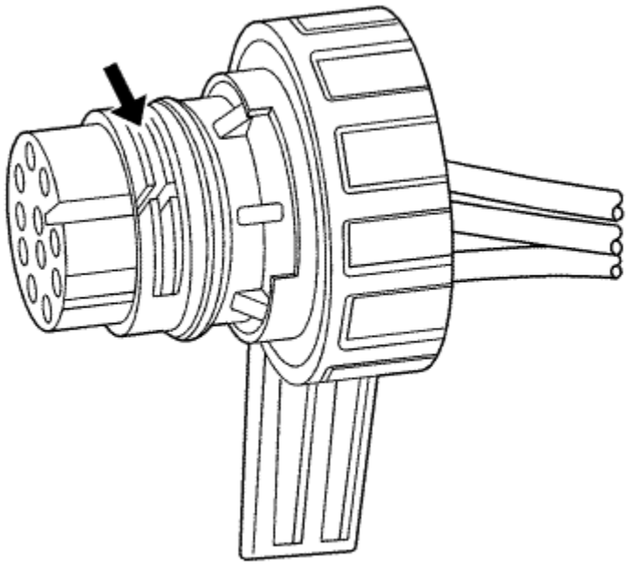

3. Locate the TPA.

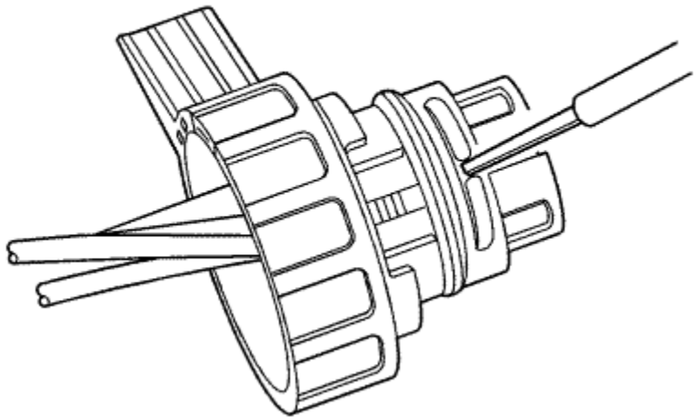

4. Use a small flat-blade tool to push the TPA until it bottoms out.

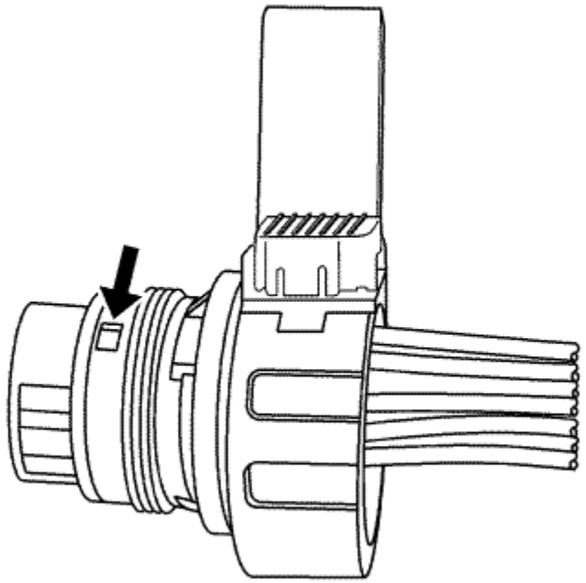

5. Ensure the TPA is fully seated. The TPA should be centred and flush with the connector body when viewed.

© Copyright Chevrolet. All rights reserved

Molex Connectors

Special Tools

- *EL-38125-580* Terminal Release Tool Kit
- *J-38125-213* Terminal Release Tool

For equivalent regional tools, refer to Special Tools .

Terminal Removal Procedure

1. Locate the connector position assurance (CPA) on the top of the wire dress cover. Slide the CPA forward.

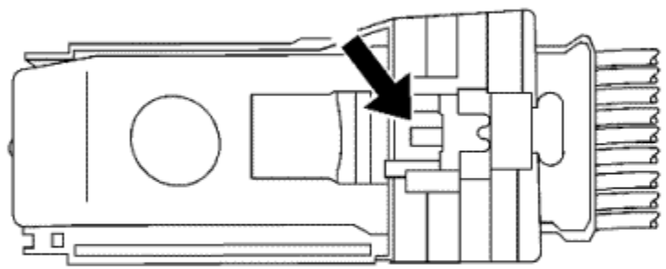

2. Slide the lever lock forward while pressing down on the lever lock release tab.

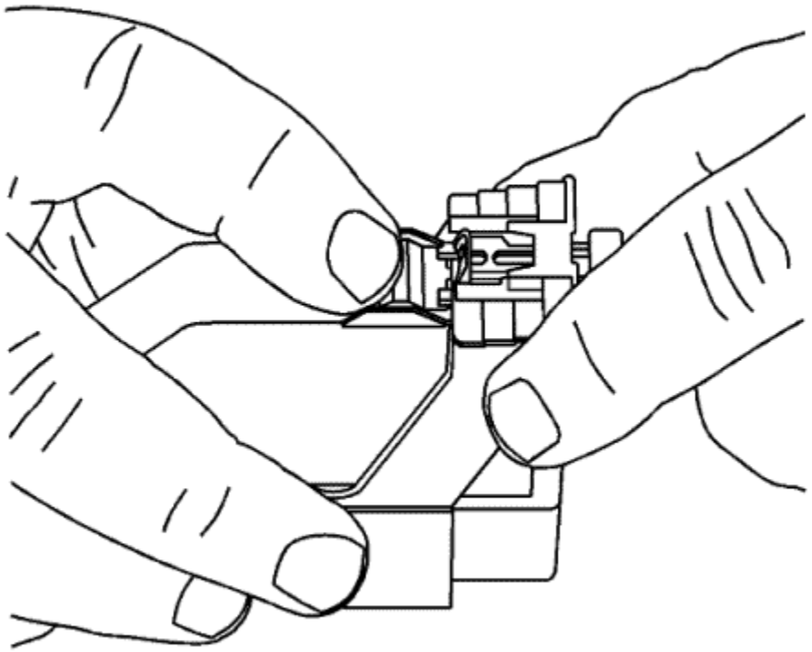

3. The lever should be in the full forward position.

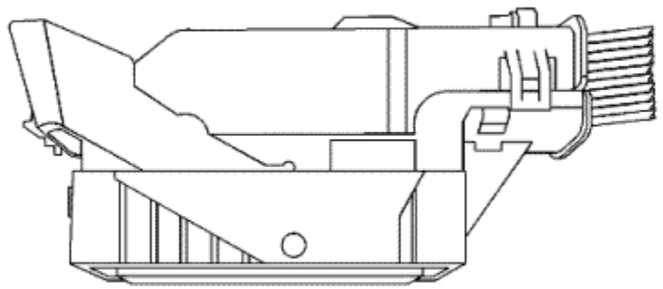

4. Disconnect the connector from the component.

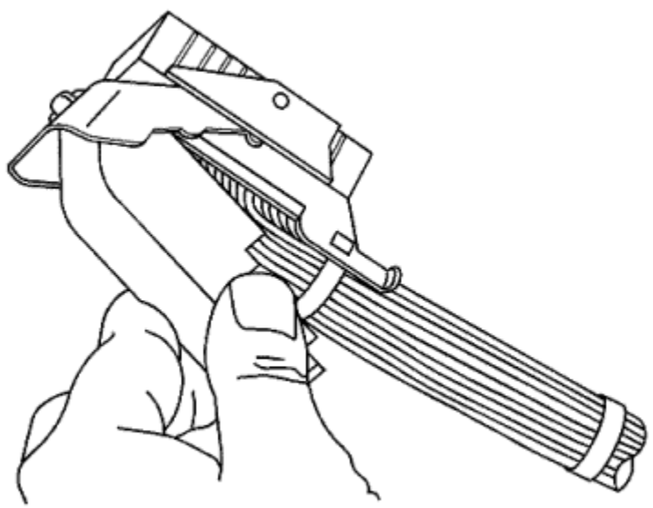

5. Remove the dress cover by using a flat bladed tool to release the dress cover locking tabs and lift up on the dress cover.

6. Cut the tie wrap that holds the wires to the connector body.

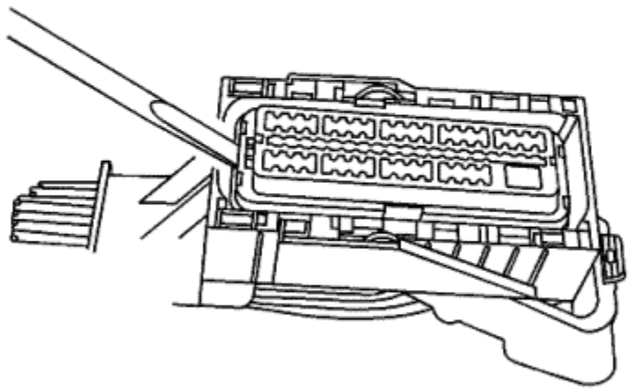

7. Use a small flat-blade tool to prise one side of the nose piece up to the pre-stage position. When the nose piece is in the pre-staged position, the nose piece will be raised above the connector body the length of the step in the nose piece.

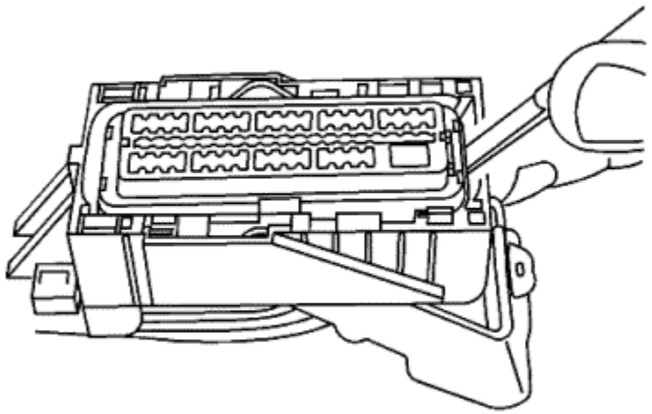

8. Use a small flat-blade tool to prise the other side of the piece to the pre-stage position. If the nose piece is higher than the first step in the nose piece, gently push down on the nose piece until it meets with resistance from the connector body, you should feel the nose piece click into position.

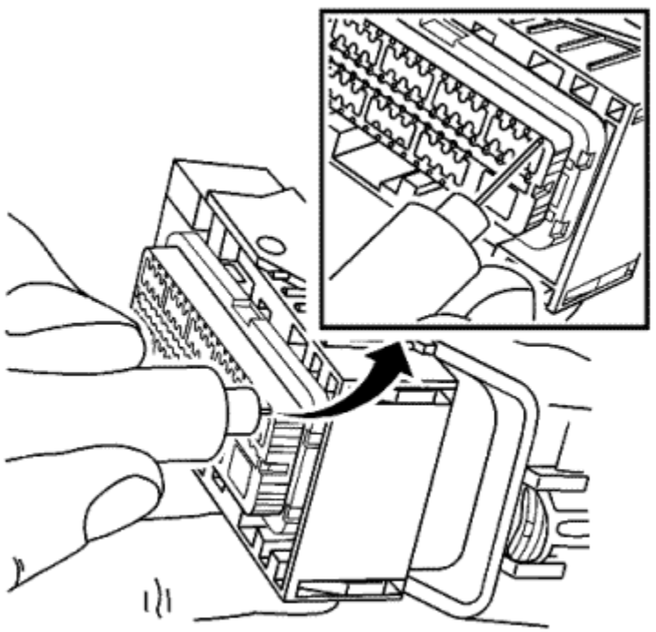

9. Insert the J-38125-213 into the small terminal release hole on the nose piece and gently pull on the back of the wire.
10. Repair the terminal by following the Repairing Connector Terminals : Terminated Lead Repair procedure.
11. Insert the repaired terminal back into the cavity. Repeat the diagnostic procedure to verify the repair and reconnect the connector bodies.

Terminated Lead Repair

1. Remove the terminal.
2. Find the appropriate terminated lead.
3. Use the appropriate splice sleeves depending on the gauge size.
4. Refer to Splicing Copper Wire Using Splice Sleeves .

Terminal Insertion Procedure

After the terminal is replaced, perform the following procedure in order to insert the terminal.

1. Slide the new terminal into the correct cavity at the back of the connector.
2. Push the terminal into the connector until it locks into place. The new terminal should be even with the other terminals. Insure that the terminal is locked in place by gently pulling on the wire.
3. To assemble the connector, reverse the connector disassembly procedure.

&#169© Copyright Chevrolet. All rights reserved

Sumitomo Connectors

Special Tools

- *EL-38125-580* Terminal Release Tool Kit
- *J-38125-12A* Terminal Release Tool
- *J-38125-552* Terminal Release Tool
- *J-38125-553* Terminal Release Tool

For equivalent regional tools, refer to Special Tools .

Terminal Removal Procedure

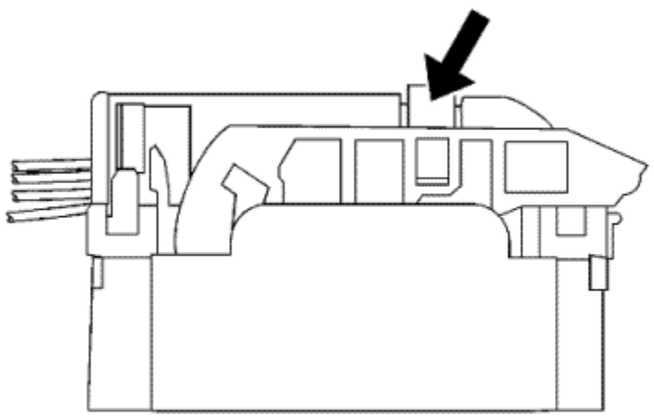

1. Slide the lever lock forward while pressing down on the lever lock release tab.

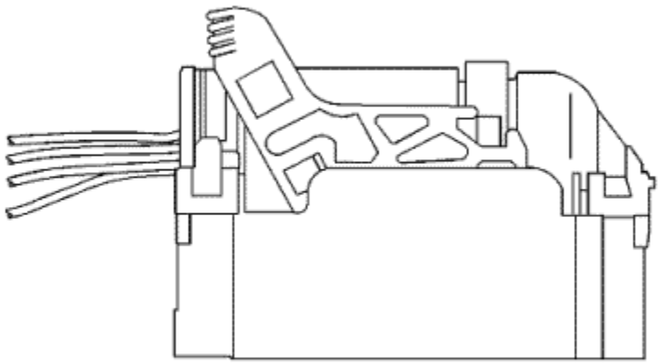

2. Disconnect the connector from the component.

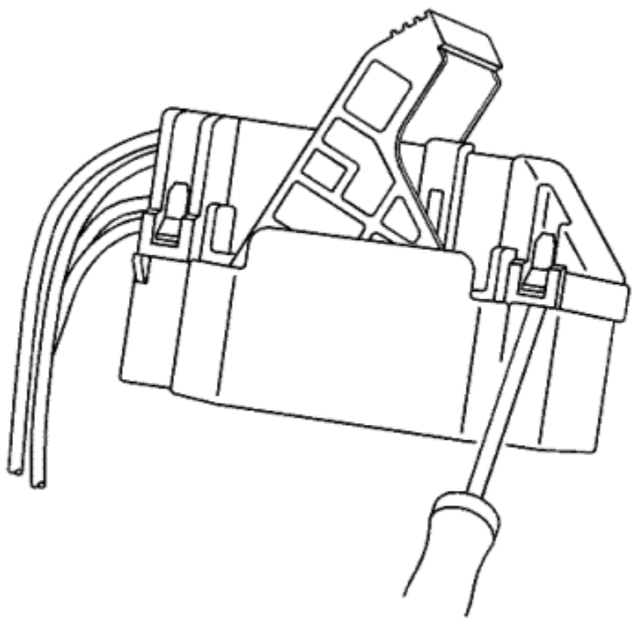

3. Remove the dress cover by using a flat-blade tool to release the connector locking tabs and pulling off the dress cover.

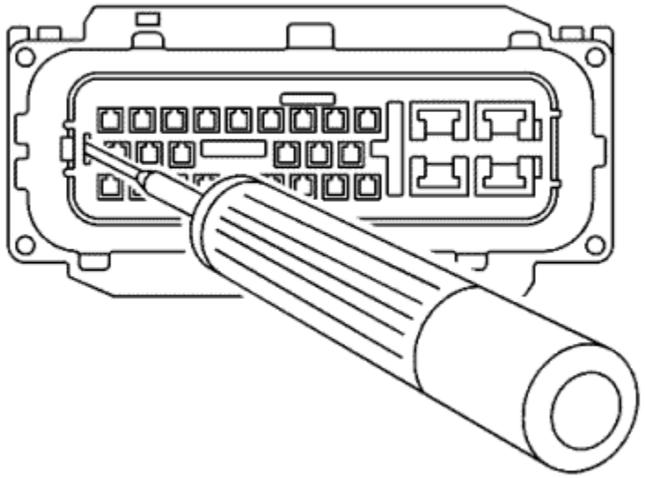

4. Relieve the tension on the nose piece retainers by inserting J-38125-12A into the single retainer slot on the end of the nose piece and gently prising out the locking tab. Repeat the process for both of the nose piece locking tabs on the opposite side of the nose piece.

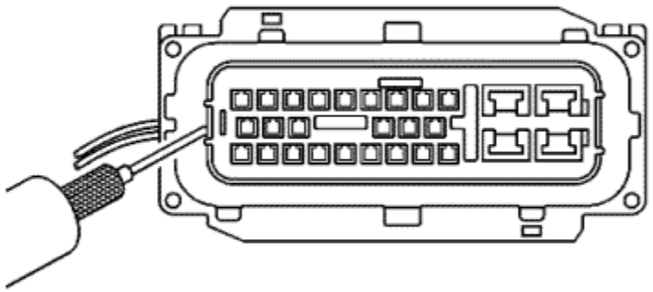

5. Once the nose piece retainers are released, use the J-38125-552 to pull up the nose piece by hooking the tool under the nose piece and pulling up. The nose piece should raise slightly.

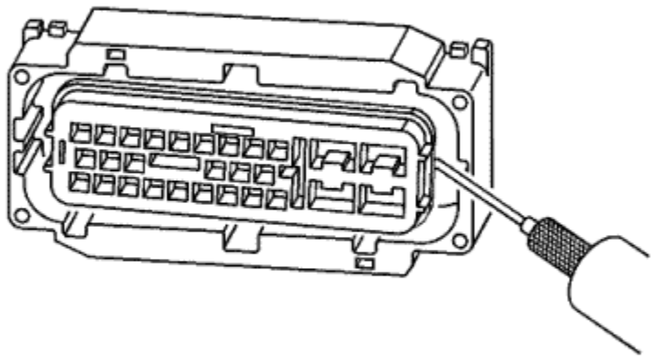

6. On the opposite side of the nose piece, use the J-38125-552 to pull up the nose piece by hooking the tool under the nose piece and pulling up. The nose piece should release completely. If the nose piece does not come off, repeat the procedure on the opposite side.

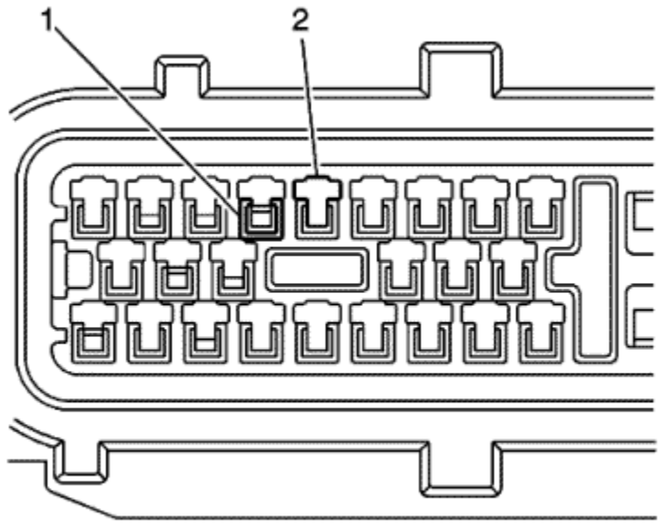

7. The illustration above identifies the entry canal where the terminal release tool will be inserted, and the terminal cavity.
   - Terminal (1)
   - Entry Canal (2)

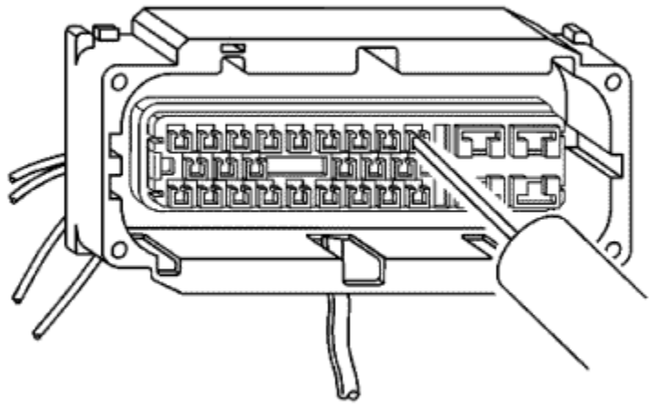

8. Insert the J-38125-553 tool into the entry canal and prise up on the terminal retainer. The terminal retainer is a small plastic piece on the top of the terminal. The terminal retainer must be held up while the terminal is pulled out of the connector.

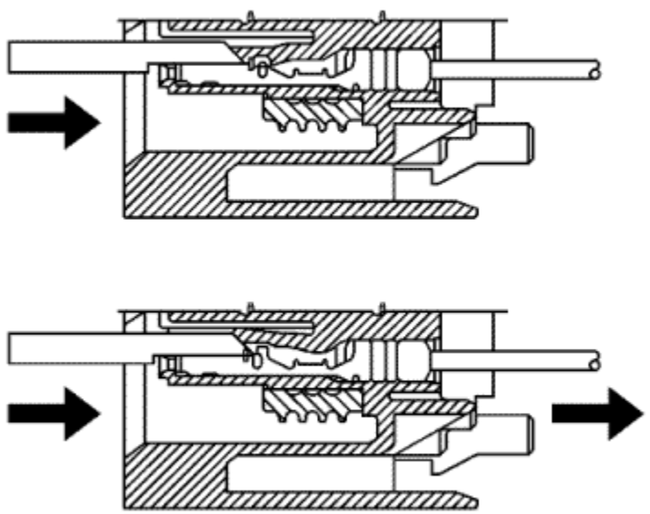

9. The illustration shows a cutaway view of the connector to aid the technician in releasing the terminal retainer.
10. Repair the terminal by following the Repairing Connector Terminals : Terminated Lead Repair procedure.
11. Insert the repaired terminal back into the cavity. Repeat the diagnostic procedure to verify the repair and reconnect the connector bodies.

Terminal Insertion Procedure

After the terminal is replaced, perform the following procedure in order to insert the terminal.

1. Slide the new terminal into the correct cavity at the back of the connector.
2. Push the terminal into the connector until it locks into place. The new terminal should be even with the other terminals. Ensure that the terminal is locked in place by gently pulling on the wire.
3. To assemble the connector, reverse the connector disassembly procedure.

&#169© Copyright Chevrolet. All rights reserved

Tyco/AMP Connectors - CM 42-Way

Special Tools

- *EL-38125-580* Terminal Release Tool Kit
- *J-38125-12A* Terminal Release Tool

For equivalent regional tools, refer to Special Tools .

Terminal Removal Procedure

1. Locate the connector position assurance (CPA) on the connector body and pull the CPA out. The CPA is on the wire harness side of connector.
2. Disconnect the connector from the component.

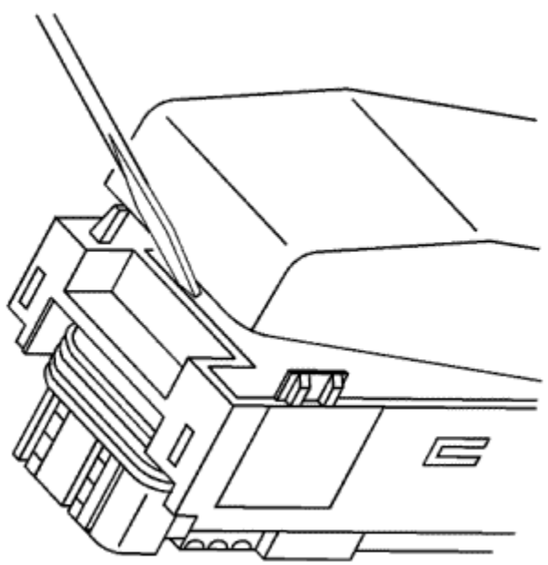

3. Use a small flat-bladed tool to gently prise off the dress cover by inserting the tool under the cover opposite the harness side and levering up.

4. Remove the cover.

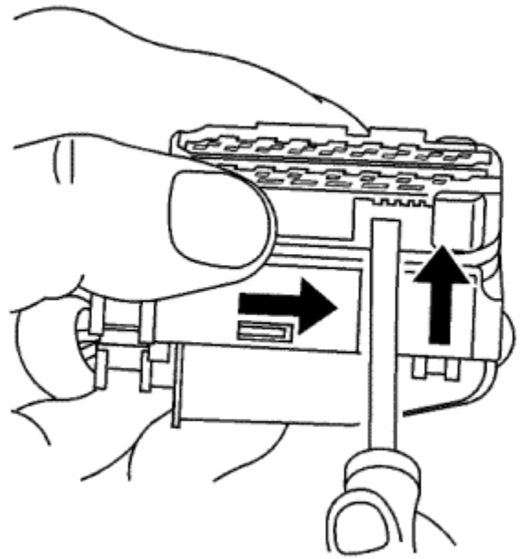

5. Using a small flat-bladed tool, push on the side of the nose piece retainer while pushing the nose piece forward with your thumb. This will release the terminal position assurance (TPA).

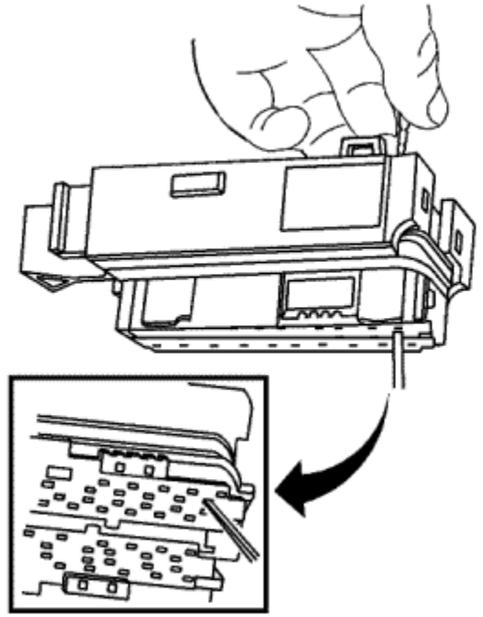

6. Insert the *J-38125-12A* tool into the corresponding terminal release cavity. The release cavities are the 2 centre rows of cavities on one half of the connector.

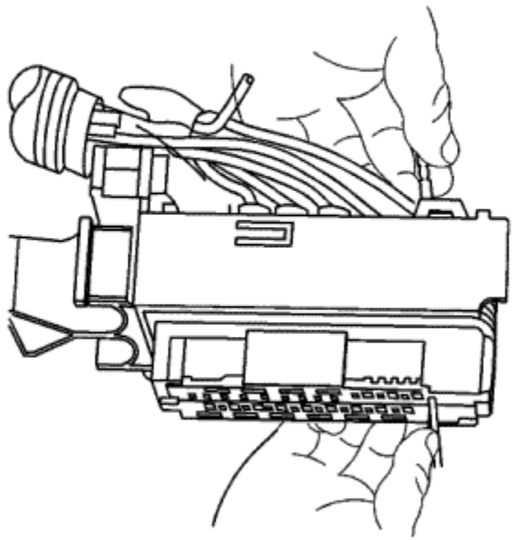

7. Pressing the *J-38125-12A* tool into the release cavity of the terminal you are removing, gently pull the wire out of the back of the connector. Always remember never use

force when pulling a terminal out of a connector.

8. Repair the terminal by following the Repairing Connector Terminals : Terminated Lead Repair procedure.
9. Insert the repaired terminal back into the cavity. Repeat the diagnostic procedure to verify the repair and reconnect the connector bodies.

© Copyright Chevrolet. All rights reserved

Tyco/AMP Connectors - Sensor

Special Tools

- *EL-38125-580* Terminal Release Tool Kit
- *J-38125-11A* Terminal Release Tool

For equivalent regional tools, refer to Special Tools .

Terminal Removal Procedure

1. Disconnect the connector from the component.

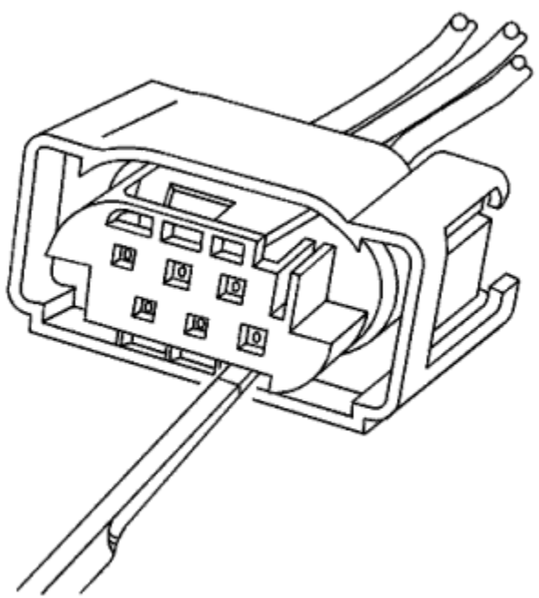

2. Insert the J-38125-11A tool into the cavity on the lower right-hand face of the connector until the terminal release tab access panel slides over.

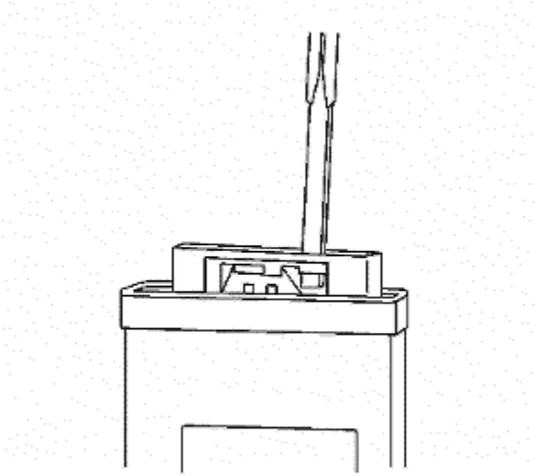

3. Ensure that the terminal release tab access panel is in the correct location to access the terminals.
4. Push the wire side of the terminal that is being removed toward the connector and hold it in position.

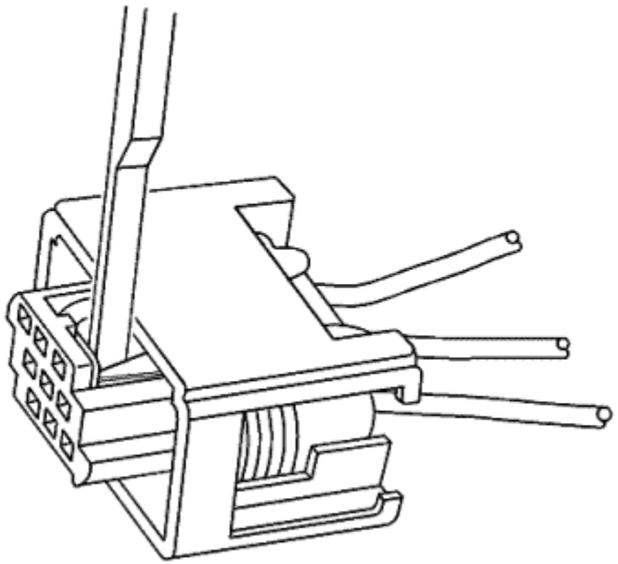

5. Insert the J-38125-11A into the terminal release tab access slot located behind the access panel of the connector and press down on the terminal while carefully pulling the terminal out of the connector. Always remember never use force when pulling a terminal out of a connector. If the terminal is difficult to remove, repeat the entire procedure.
6. Repair the terminal by following the Repairing Connector Terminals : Terminated Lead Repair procedure.

7. Insert the repaired terminal back into the cavity. Repeat the diagnostic procedure to verify the repair and reconnect the connector bodies.

© Copyright Chevrolet. All rights reserved

Tyco/AMP Connectors - 0.25 Cap

Special Tools

- *EL-38125-580* Terminal Release Tool Kit
- *J-38125-24* Terminal Release Tool

For equivalent regional tools, refer to Special Tools .

Terminal Removal Procedure

1. Disconnect the connector from the component by pressing down on the connector position assurance (CPA).

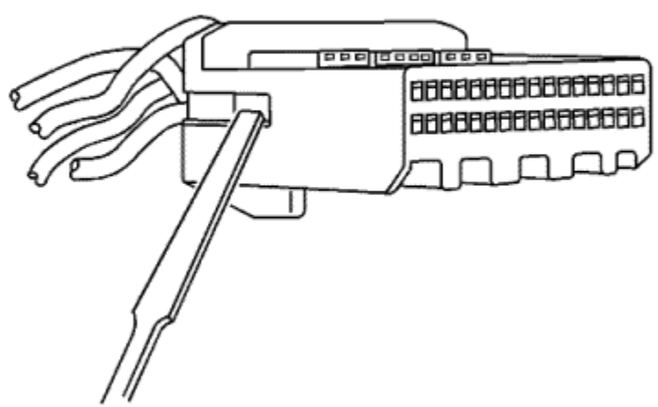

2. Use a small flat-bladed tool to release the terminal position assurance (TPA) by inserting the tool in the small recess on the side of the connector and pushing up until the TPA releases from the connector body. The TPA should raise just slightly. Do not try to remove the TPA.

Note: The TPA on this connector cannot be removed unless the terminals are removed first. The TPA will come out of the connector body, but only slightly. When the TPA is slightly raised the terminals can be removed. Using excessive force to remove the TPA with the terminals still in the connector will damage the connector.

3. Repeat the process for the other side of the connector.

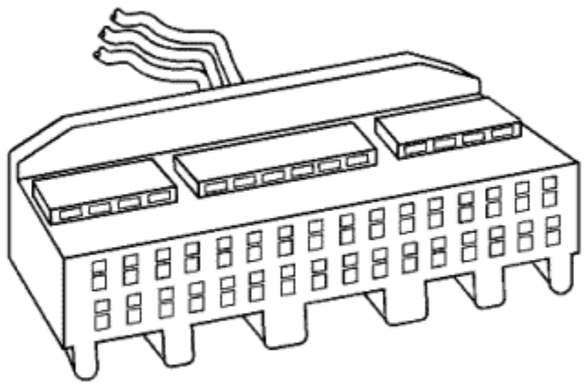

4. Ensure that the TPA is in the proper position to remove the terminals.

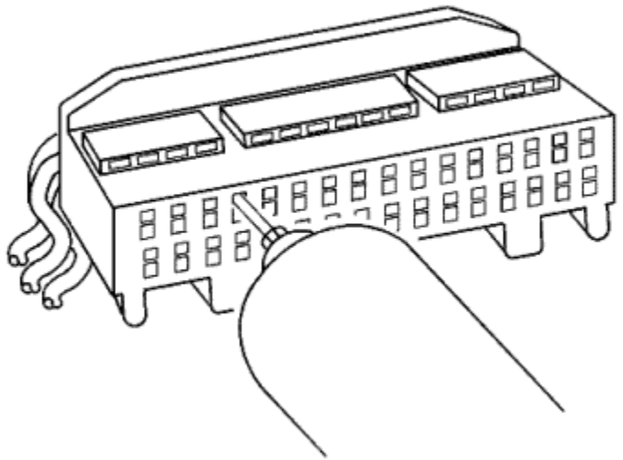

5. While pushing the terminal forward, insert the J-38125-24 into the release cavity above the terminal you are removing, and gently pull the wire out of the back of the connector. Always remember never use force when pulling a terminal out of a connector.
6. Repair the terminal by following the Repairing Connector Terminals : Terminated Lead Repair procedure.
7. Insert the repaired terminal back into the cavity. Repeat the diagnostic procedure to verify the repair and reconnect the connector bodies.

© Copyright Chevrolet. All rights reserved

Tyco/AMP Connectors - 43-Way

Special Tools

- *EL-38125-580* Terminal Release Tool Kit
- *J-38125-12A* Terminal Release Tool
- *J-38125-13A* Terminal Release Tool

For equivalent regional tools, refer to Special Tools .

Terminal Removal Procedure

Follow the steps below in order to remove terminals from the connector.

1. Locate the lever lock on the wire dress cover. Slide the lever lock away from the connector body.
2. Disconnect the connector from the component.
3. Locate the dress cover locking tabs on the dress cover of the connector. Using a small flat-bladed tool release all of the locking tabs.
4. Once the locks are unlocked, lift the dress cover off.

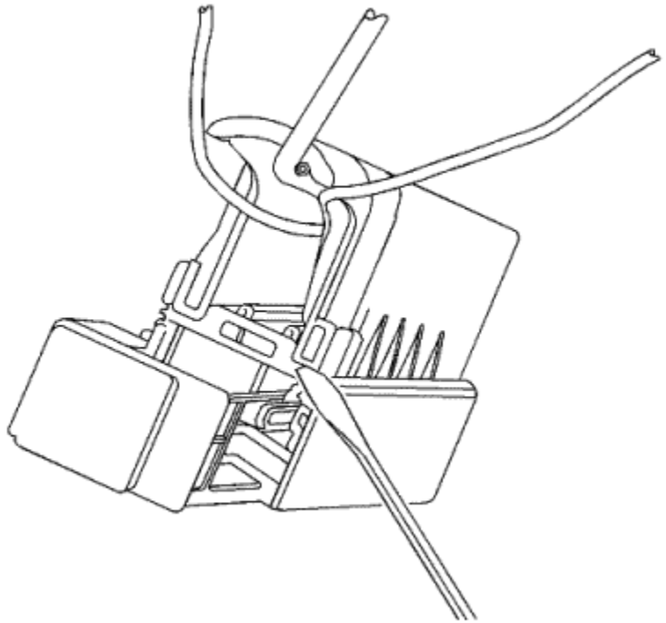

Note: Always use care when removing a terminal position assurance (TPA) in order to avoid damaging it.

5. Release the TPA by inserting a small flat-bladed tool into the blue locking tabs on both ends of the connector. Gently slide the TPA up to the released position on both ends.

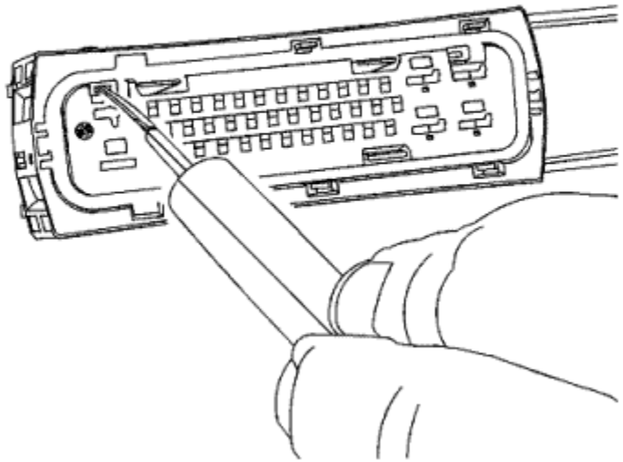

6. For the larger terminals insert the *J-38125-13A* tool to release the terminals by inserting the tool into the terminal release cavity. For the smaller terminals insert the *J-38125-12A* tool to release the terminals by inserting the tool into the terminal release cavity.

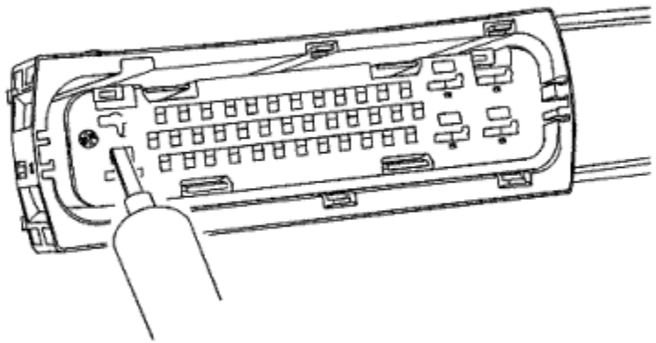

7. View of the release tool being used for the larger terminals.

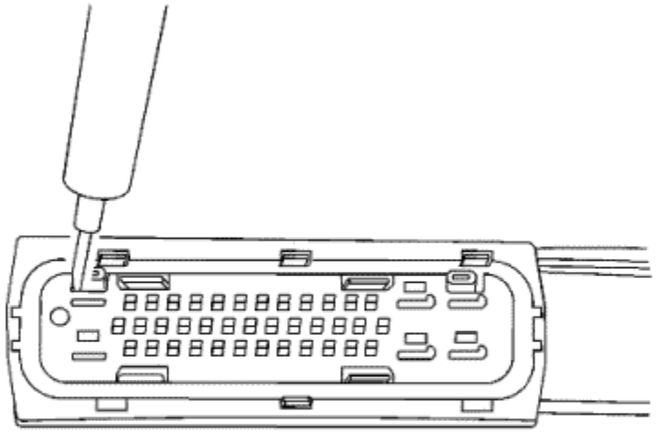

8. View of the release tool being used for the larger terminals.

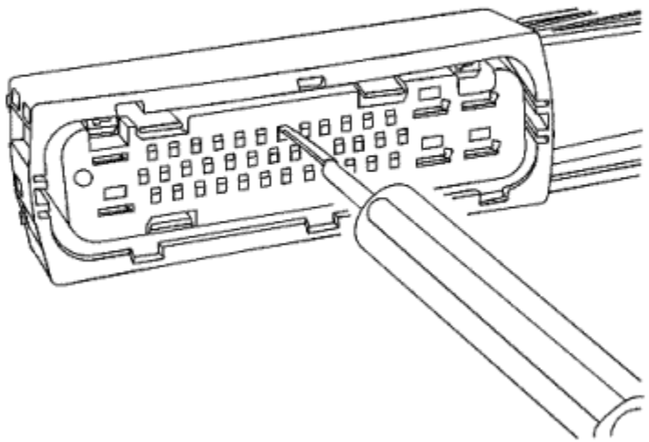

9. View of the release tool being used for the smaller terminals.
10. While holding the removal tool in place, gently pull the wire out of the back of the connector. Always remember never use force when pulling a terminal out of a connector.
11. Repair the terminal by following the Repairing Connector Terminals : Terminated Lead Repair procedure.
12. Insert the repaired terminal back into the cavity. Repeat the diagnostic procedure to verify the repair and reconnect the connector bodies.

© Copyright Chevrolet. All rights reserved

Tyco/AMP Connectors - Door Module

Special Tools

- *EL-38125-580* Terminal Release Tool Kit
- *J-38125-12A* Terminal Release Tool

For equivalent regional tools, refer to Special Tools .

Terminal Removal Procedure

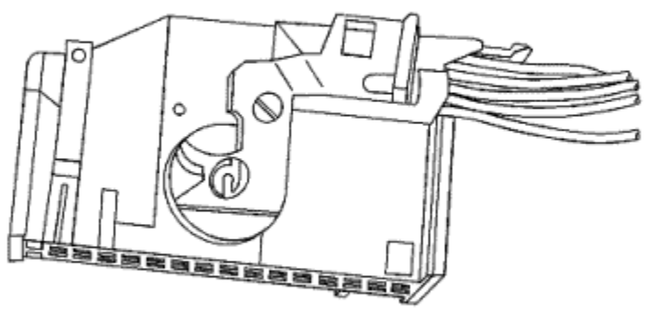

Side view of connector.

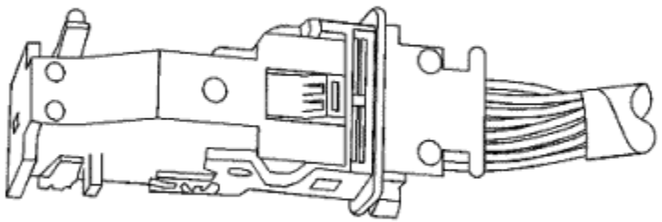

View of top of connector.

1. Locate the assist lever and lock on the top of the connector.

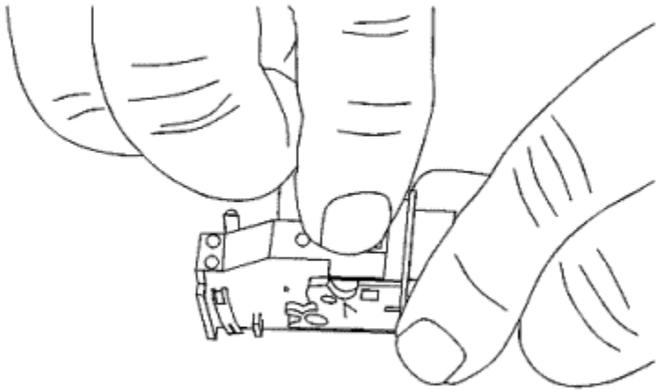

2. While depressing the lock, pull the lever over and past the lock.

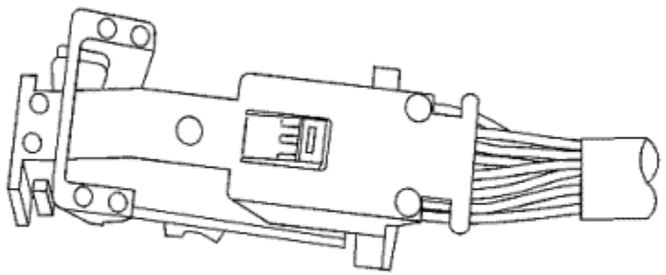

3. Disconnect the connector from the component.

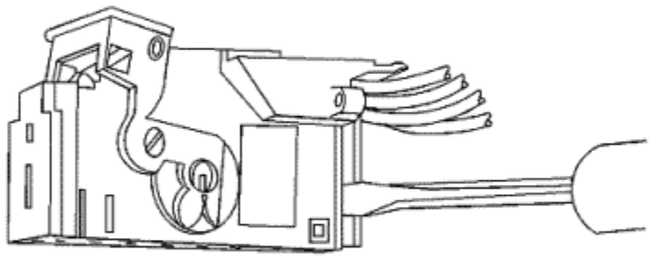

4. Locate the dress cover locking tabs at the rear of the connector. Use a small flat-blade tool to release the locking tabs. Repeat this procedure for the other locking tab.

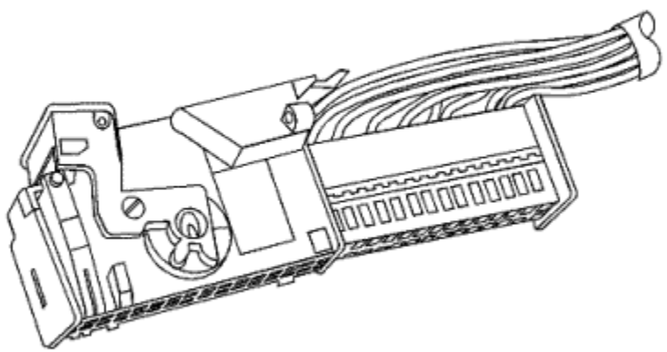

5. Once the locking tabs are unlocked, slide the inner connector out of the rear of the connector housing.

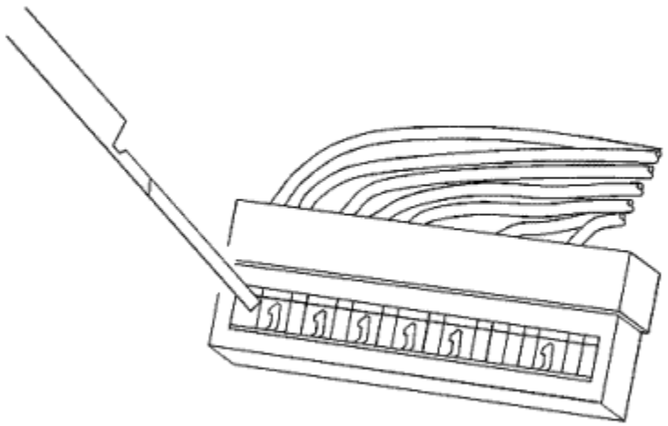

6. Use the J-38125-12A tool to release the terminals by pressing on the tab.
7. While holding the removal tool in place, gently pull the wire out of the back of the connector. Always remember never use force when pulling a terminal out of a connector.
8. Repair the terminal by following the Repairing Connector Terminals : Terminated Lead Repair procedure.
9. Insert the repaired terminal back into the cavity. Repeat the diagnostic procedure to verify the repair and reconnect the connector bodies.

© Copyright Chevrolet. All rights reserved

Tyco/AMP Connectors - 102-Way Inline

Special Tools

- *EL-38125-580* Terminal Release Tool Kit
- *J-38125-11A* Terminal Release Tool
- *J-38125-212* Terminal Release Tool
- *J-38125-216* Terminal Release Tool
- *J-38125-221* Terminal Release Tool
- *J-38125-560* Terminal Release Tool
- *J-38125-566* Terminal Release Tool

For equivalent regional tools, refer to Special Tools .

Terminal Removal Procedure

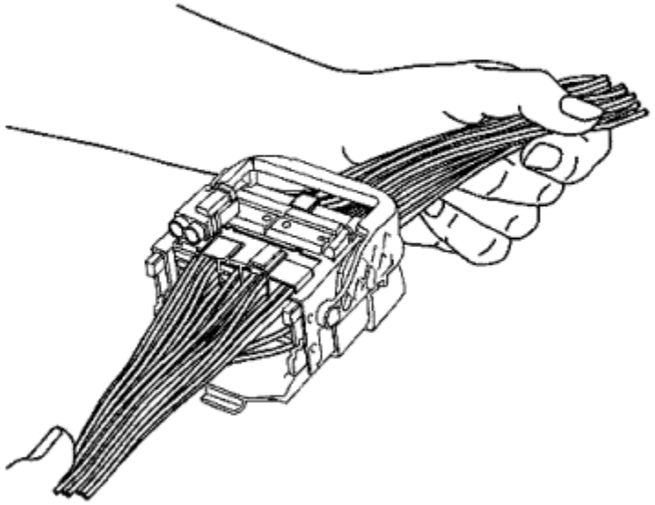

View of a typical connector in the assembled position.

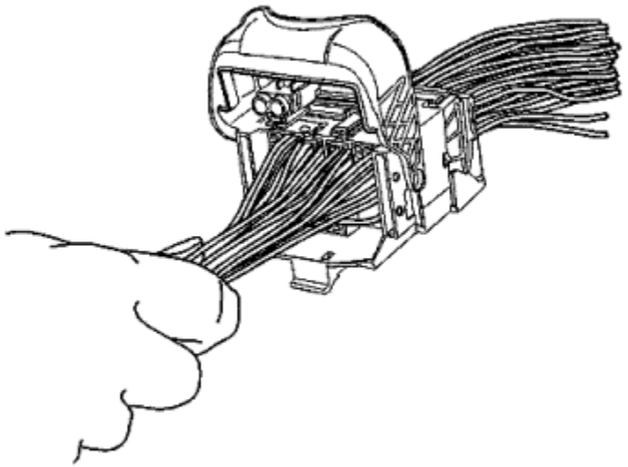

1. Pull the locking lever to the 90 degree position from the connector body.

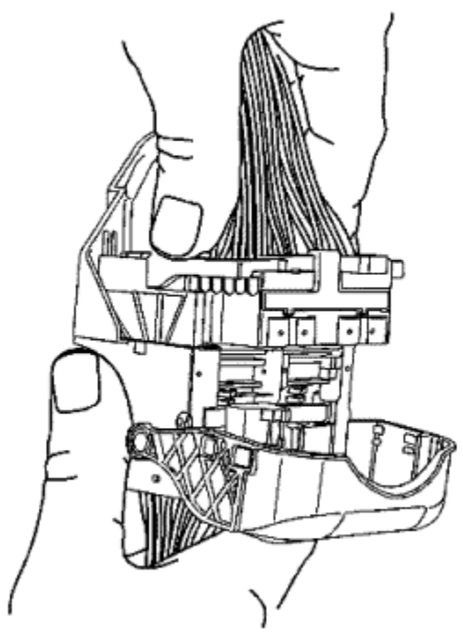

2. With the locking lever in the 90 degree position and the male connector body separated, it can be slid outward for removal.

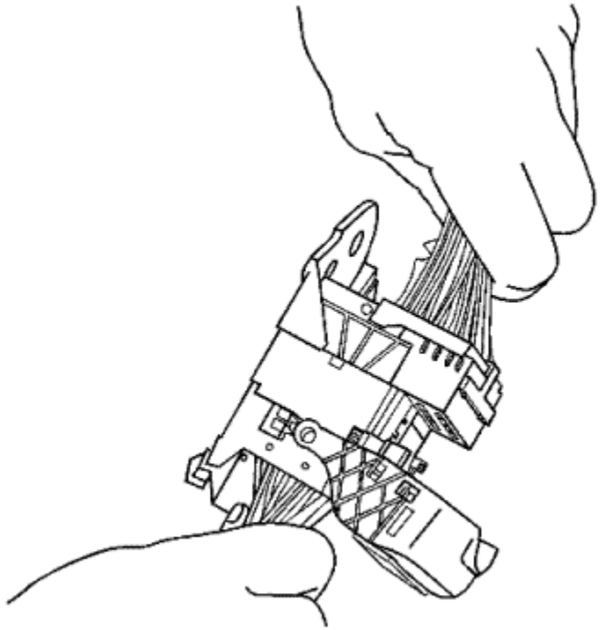

3. Slide the male connector body out away from the guide plates.

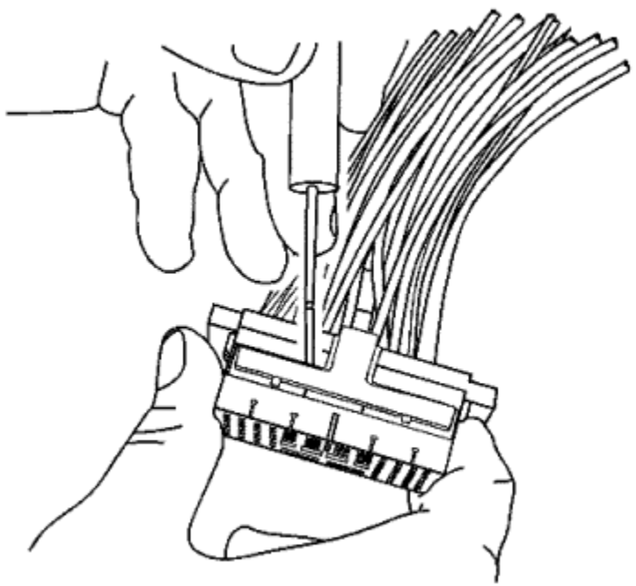

Note: During assembly the terminal position assurance (TPA) will not fully seat if any terminal is not fully seated.

4. Using terminal release tool J-38125-11A or equivalent, remove the TPA from the connector body.

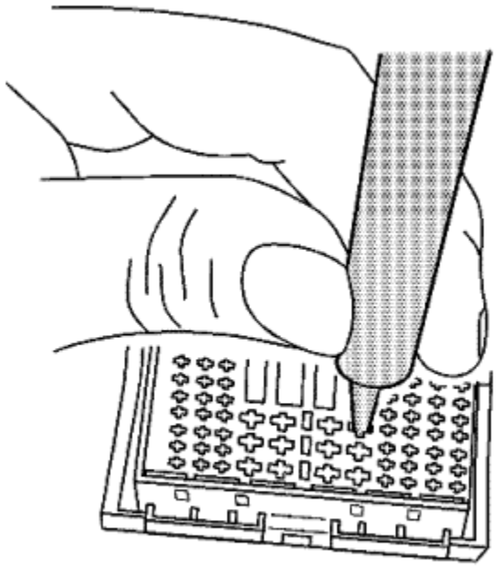

5. Using terminal release tool J-38125-566, press the prongs into the holes on each side of the terminal to be removed to release the lock tabs and pull the terminal out of the connector body.

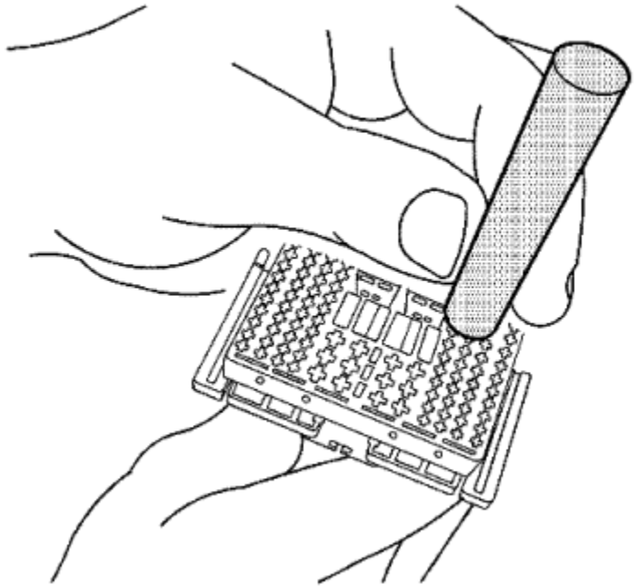

6. Using terminal release tool J-38125-560, press the prongs into the holes on each side of the terminal to be removed to release the lock tabs and pull the terminal out of the connector body.

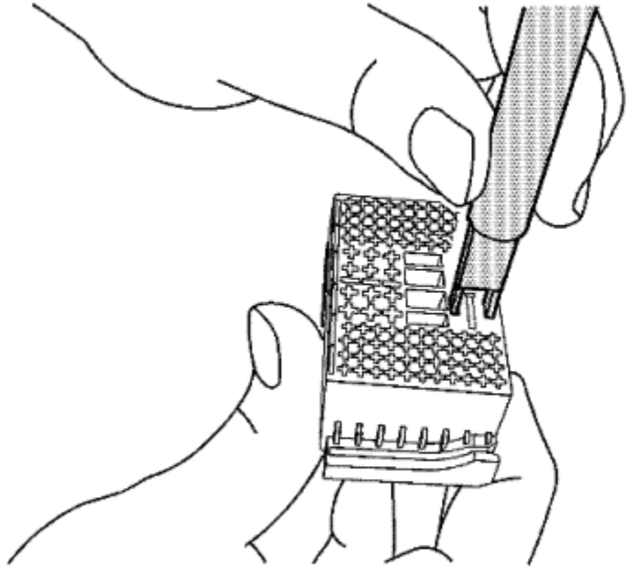

7. Using terminal release tool J-38125-221, press the prongs into the holes on each side of the terminal to be removed to release the lock tabs and pull the terminal out of the connector body.

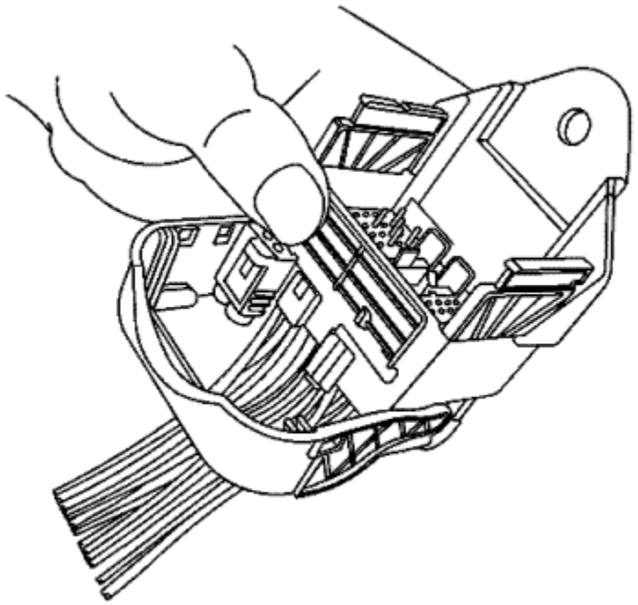

8. The female connector body may have an additional connector hooked to the edge of the body. Use terminal release tool J-38125-11A or equivalent to release the locking tab and slide the connector off the female body.

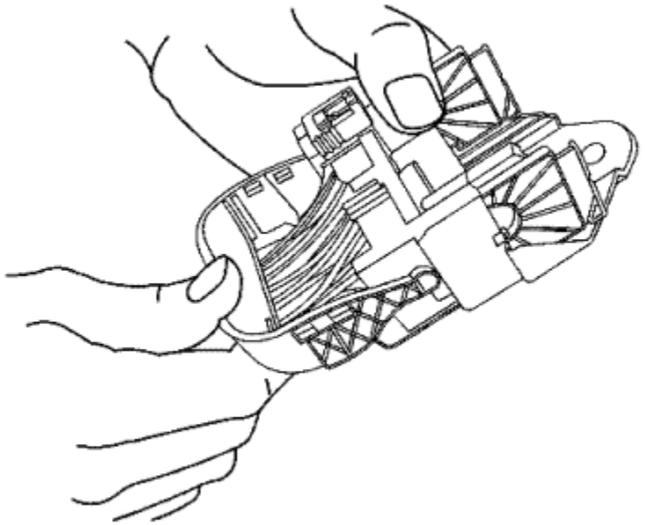

9. Move the locking lever 180 degrees from the connected position.

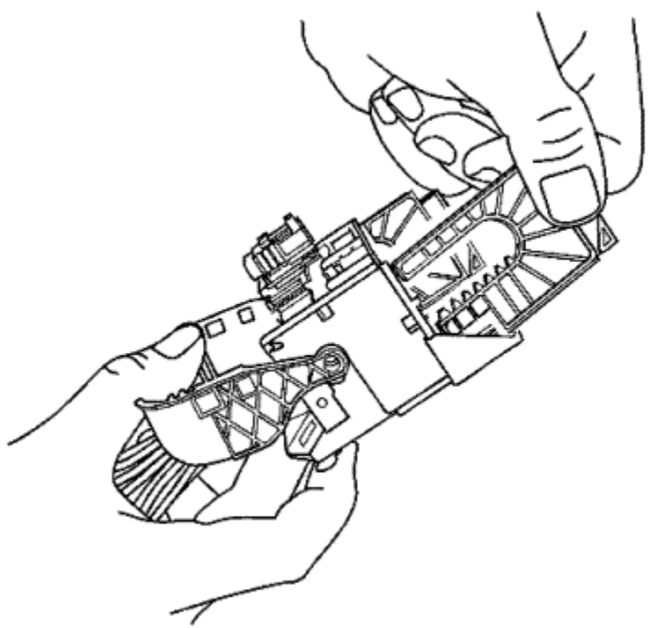

10. With the locking lever in the 180 degree position the guide plates can be removed from the connector body.

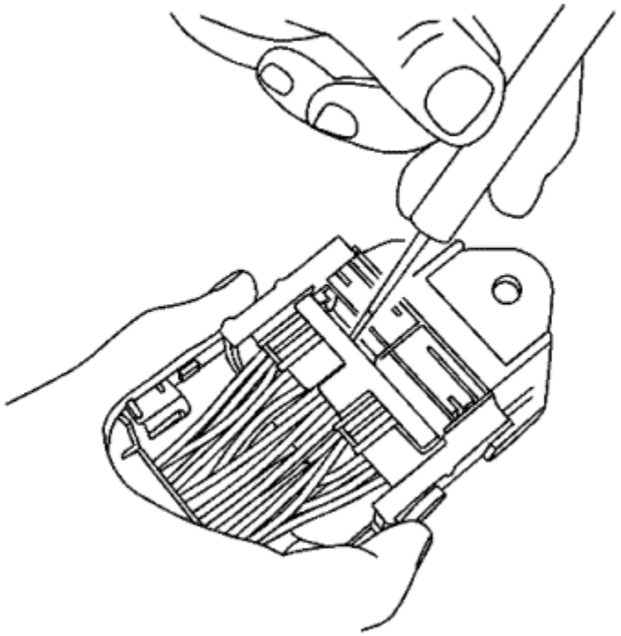

Note: During assembly the TPA will not fully seat if any terminal is not fully seated.

11. Using terminal release tool J-38125-11A or equivalent, remove the TPA from the connector body.

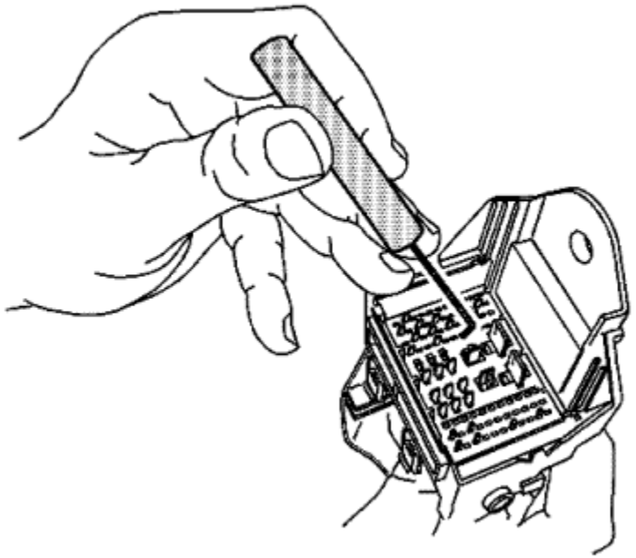

12. Using terminal release tool J-38125-216, lift the terminal plate past the terminals and out of the connector body cavity.

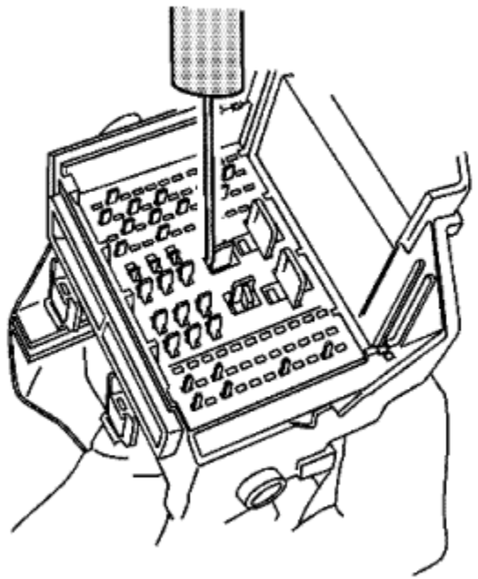

13. Terminal plate will bind slightly on each corner.

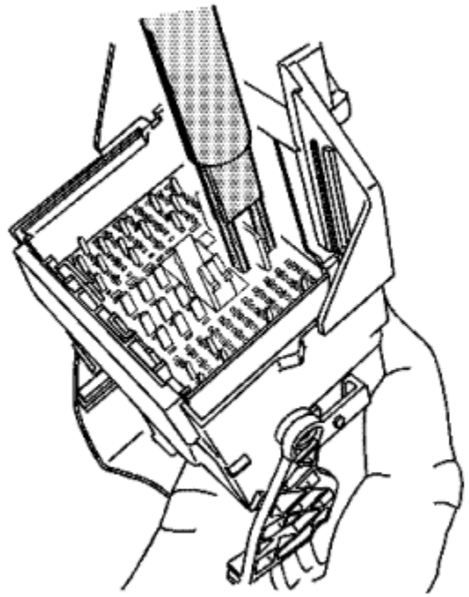

14. Using terminal release tool J-38125-221, press the prongs into the holes on each side of the terminal to be removed to release the lock tabs and pull the terminal out of the connector body.

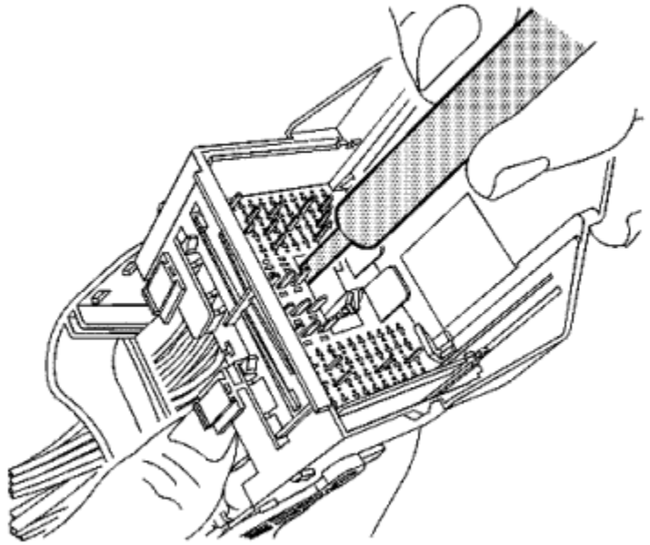

15. Using terminal release tool J-38125-212, press the prongs into the holes on each side of the terminal to be removed to release the lock tabs and pull the terminal out of the connector body.

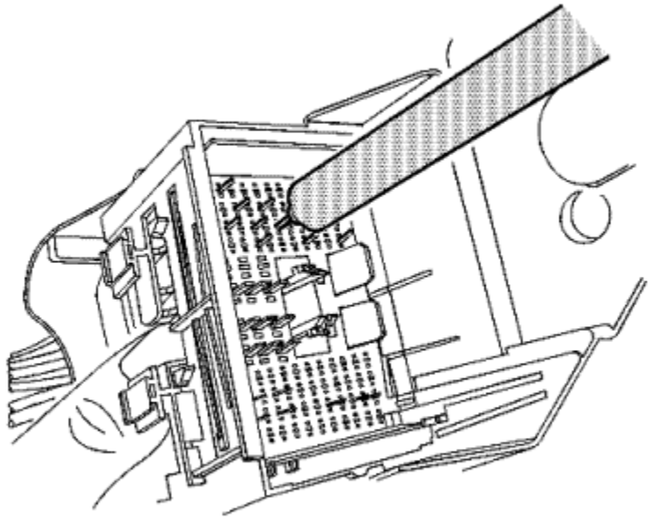

16. Using terminal release tool J-38125-560, press the prongs into the holes on each side of the terminal to be removed to release the lock tabs and pull the terminal out of the connector body.

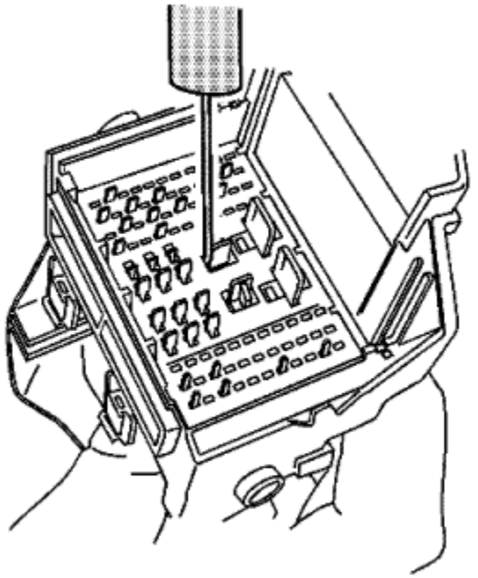

17. Press the terminal plate back into the female connector to the preset position. The plate will bind slightly on each corner.

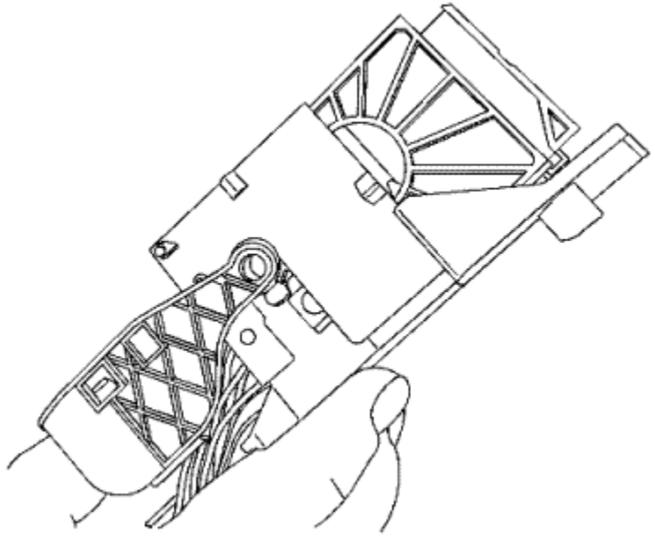

18. With the locking lever in the 180 degree position, align the guide plates to mesh with the gears on the locking lever.

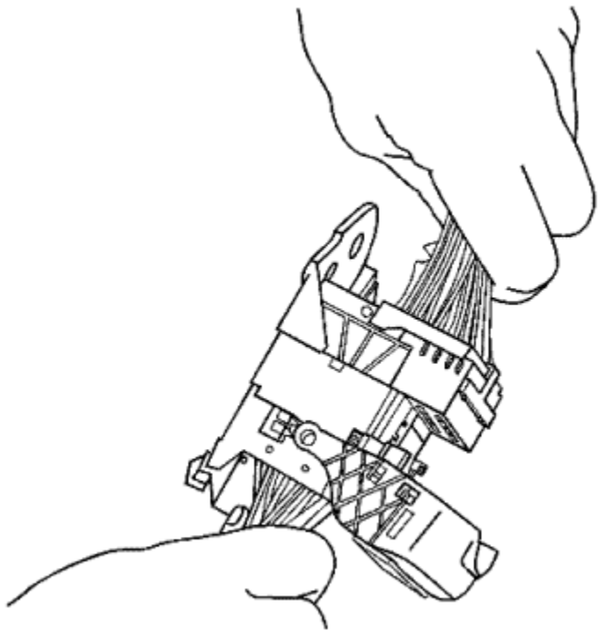

19. Slide the male connector body back inward toward the guide plates.

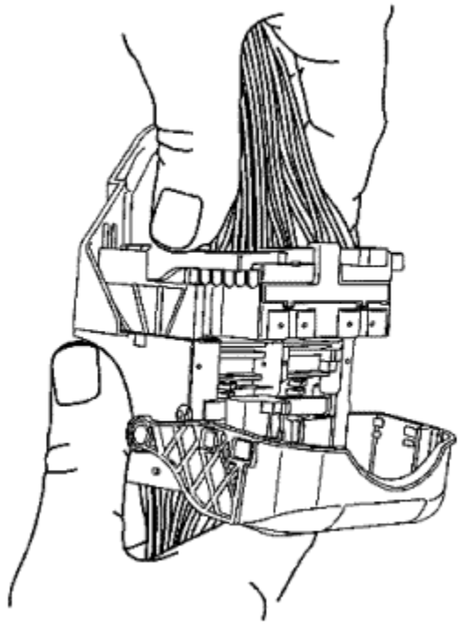

20. With the locking lever in the 90 degree position and the male connector body connected, it can be slid inward for assembly.

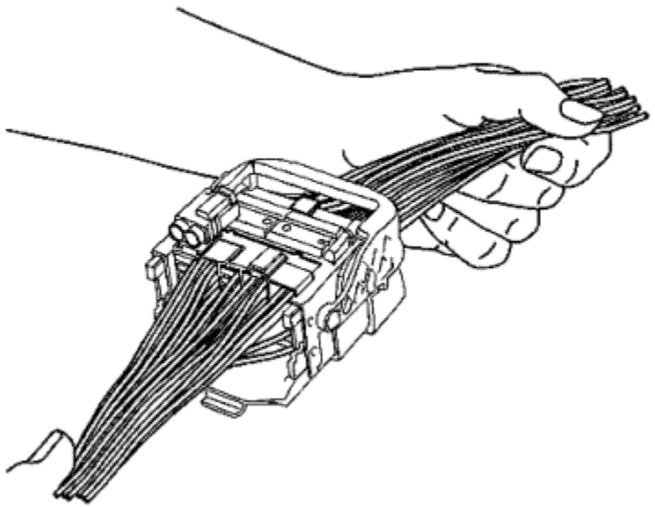

21. Move the lever into the locked position or in the assembled position. This will pull the male connector down into the female connector.
22. Repair the terminal by following the Repairing Connector Terminals : Terminated Lead Repair procedure.
23. Insert the repaired terminal back into the cavity. Repeat the diagnostic procedure to verify the repair and reconnect the connector bodies.

© Copyright Chevrolet. All rights reserved

Tyco/AMP Connectors - Seat

Special Tools

- *EL-38125-580* Terminal Release Tool Kit
- *J-38125-11A* Terminal Release Tool
- *J-38125-212* Terminal Release Tool
- *J-38125-556* Terminal Release Tool
- *J-38125-560* Terminal Release Tool

For equivalent regional tools, refer to Special Tools .

Terminal Removal Procedure

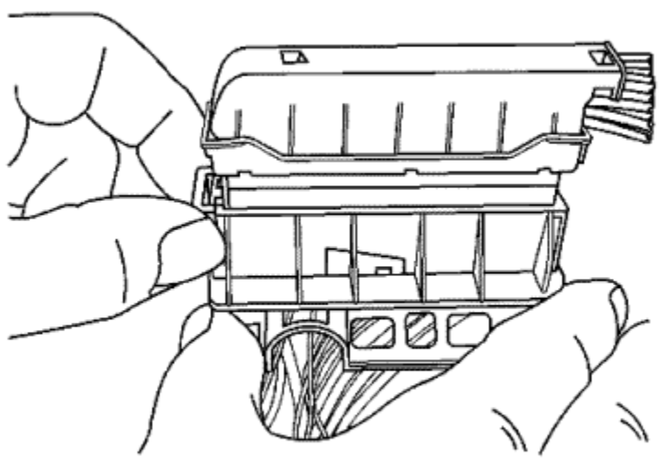

1. Grasp the locking slide lever and pull outward from the end of the connector.

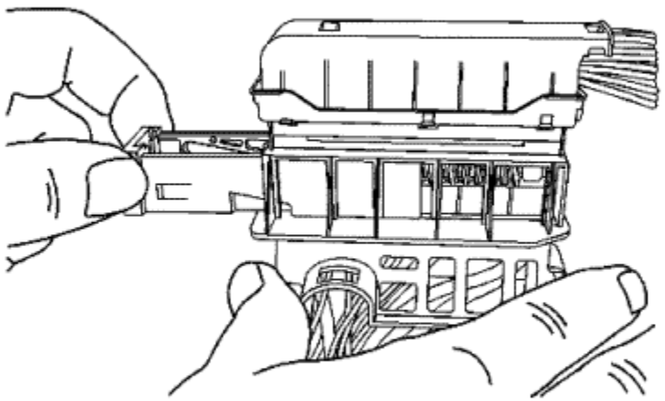

2. As the slide lever is pulled out the mating connector is lifted from the seated position.

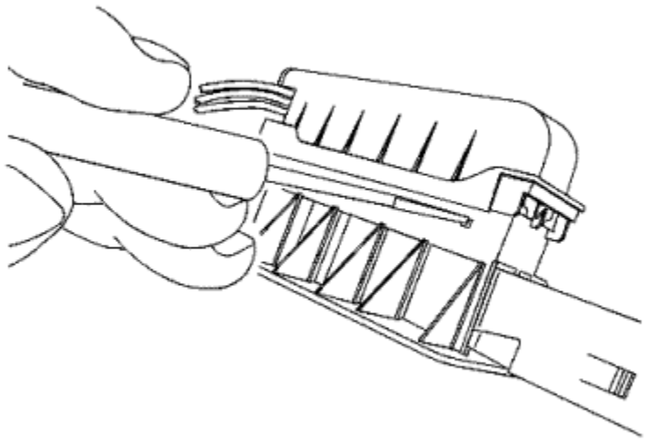

Note: Terminal position assurance (TPA) is keyed and can only be inserted in one direction.

3. Using terminal release tool J-38125-11A or equivalent, push the TPA tabs into the connector body.

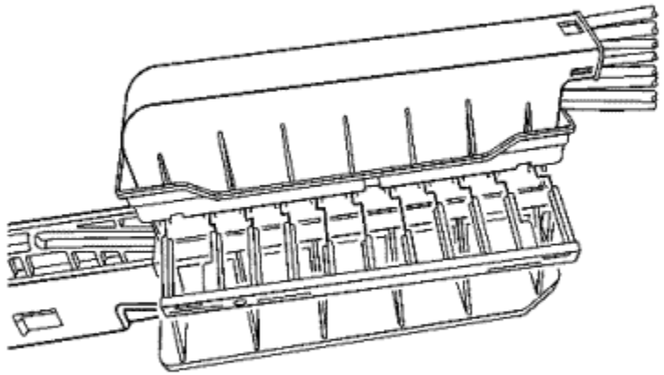

4. Pull the TPA from the connector body.

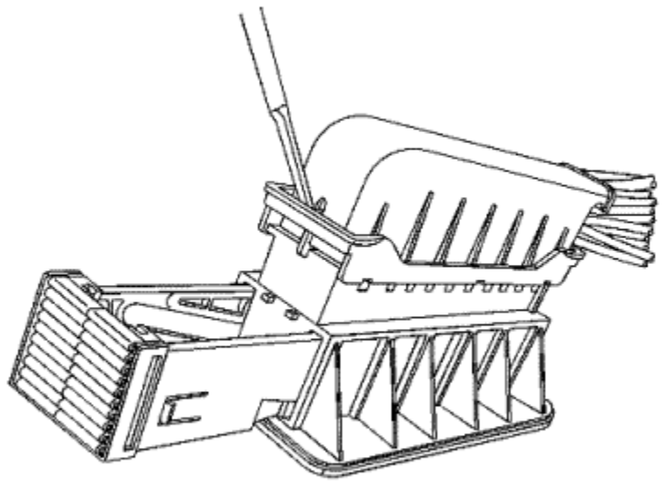

5. Using terminal release tool J-38125-11A or equivalent, release the connector wire dress cover locking tab.

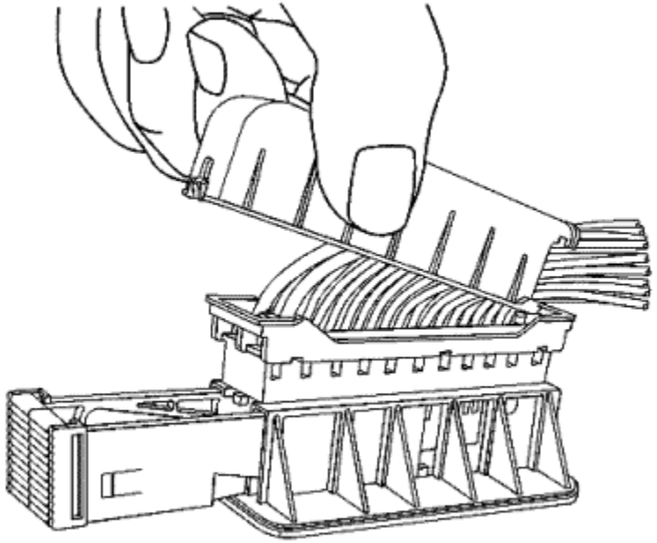

6. With the lock tab released, lift the connector wire dress cover from the connector body.

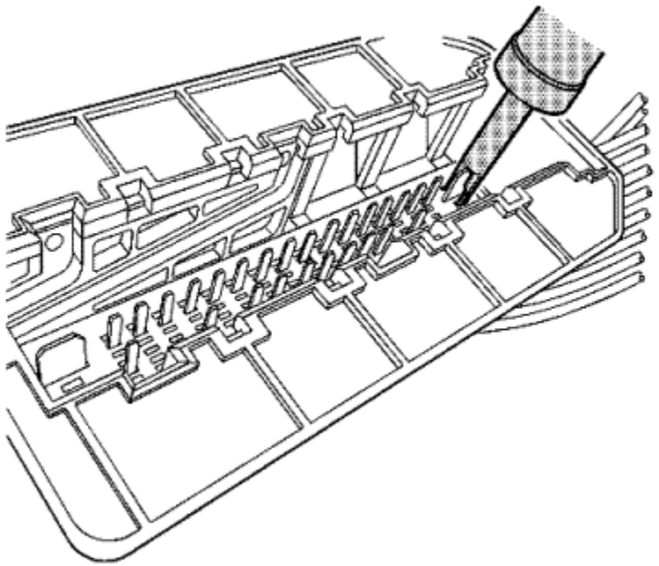

7. Using terminal release tool J-38125-212, press the prongs into the holes on each side of the terminal to be removed to release the lock tabs and pull the terminal out of the connector body.

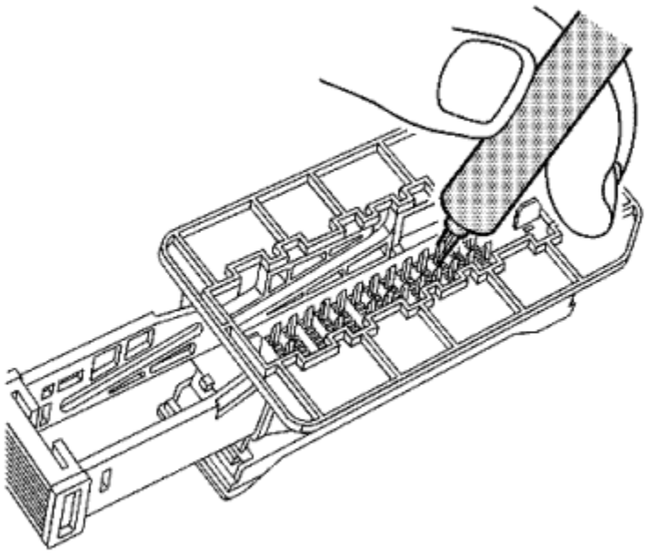

8. Using terminal release tool J-38125-560, press the prongs into the holes on each side of the terminal to be removed to release the lock tabs and pull the terminal out of the connector body.

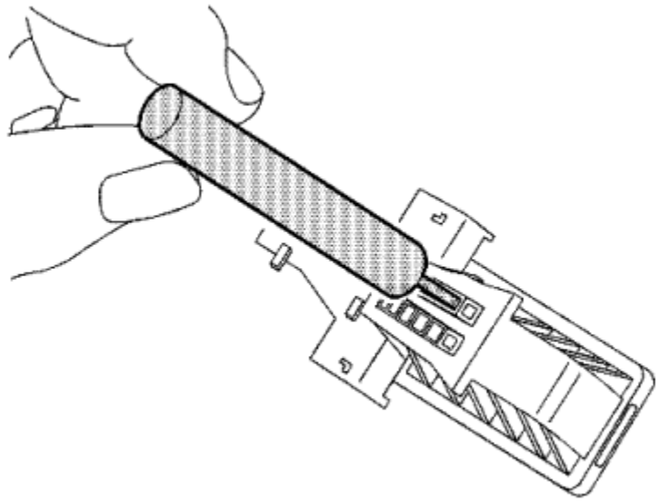

9. Using terminal release tool J-38125-556, press the prongs into the holes on each side of the terminal to be removed to release the lock tabs and pull the terminal out of the connector body.
10. Repair the terminal by following the Repairing Connector Terminals : Terminated Lead Repair procedure.
11. Insert the repaired terminal back into the cavity. Repeat the diagnostic procedure to verify the repair and reconnect the connector bodies.

© Copyright Chevrolet. All rights reserved

Tyco/AMP Connectors - SIR

Special Tools

- *EL-38125-580* Terminal Release Tool Kit
- *J-38125-11A* Terminal Release Tool
- *J-38125-215A* Terminal Release Tool

For equivalent regional tools, refer to Special Tools .

Removal Procedure

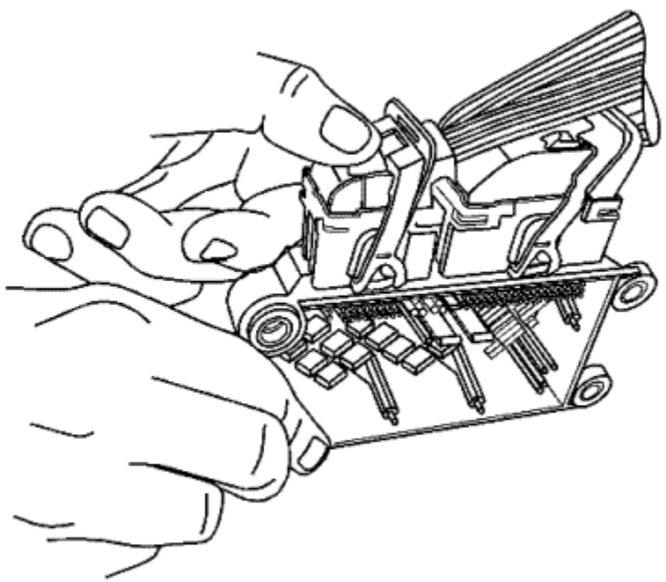

1. Using your thumbs press down and slide the red CPA away from the connector lever.

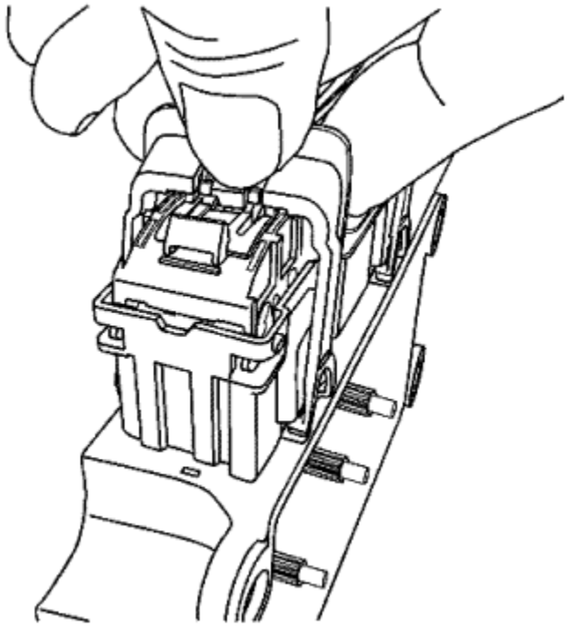

2. Using your thumb press down on the locking tab and move the lever to the released position.

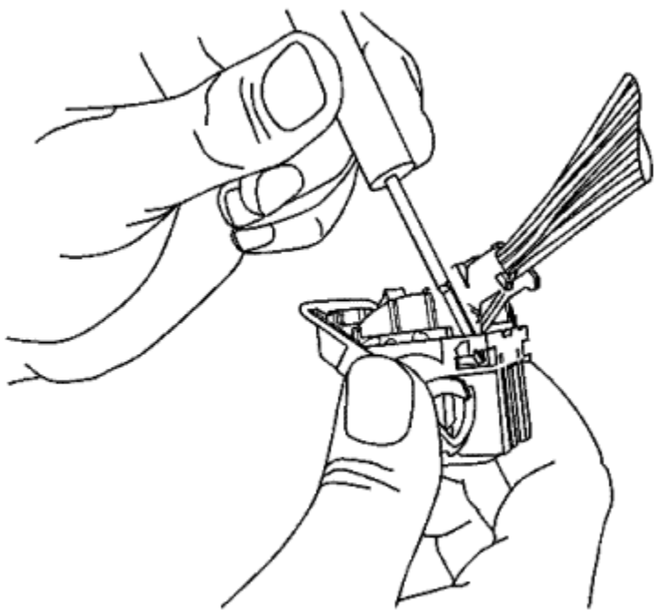

3. Using terminal tool J-38125-11A or equivalent, release the wire dress cover locking tabs.

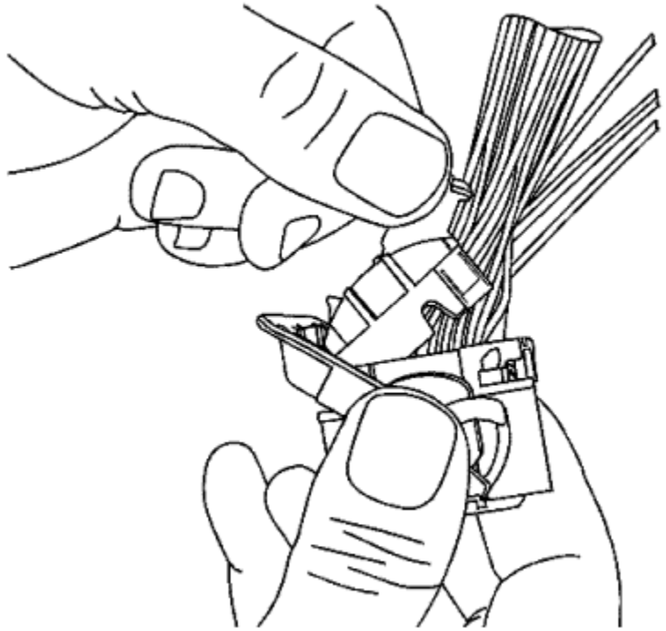

4. Pivot connector wire dress cover while removing from the connector body.

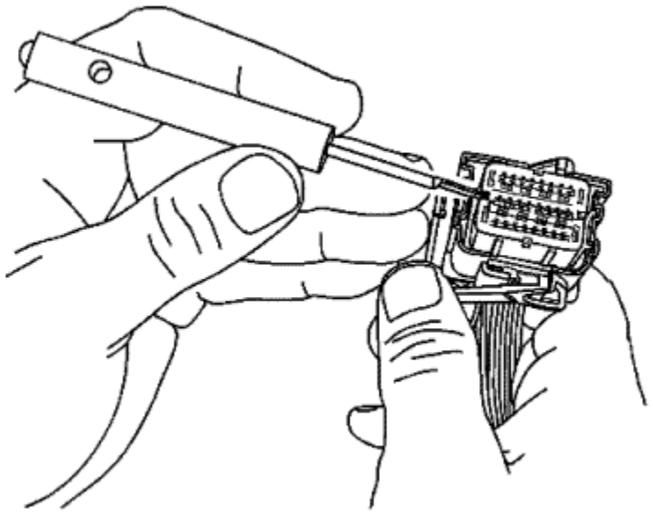

5. Using terminal tool J-38125-11A or equivalent, remove the TPA by lifting straight off the connector body.

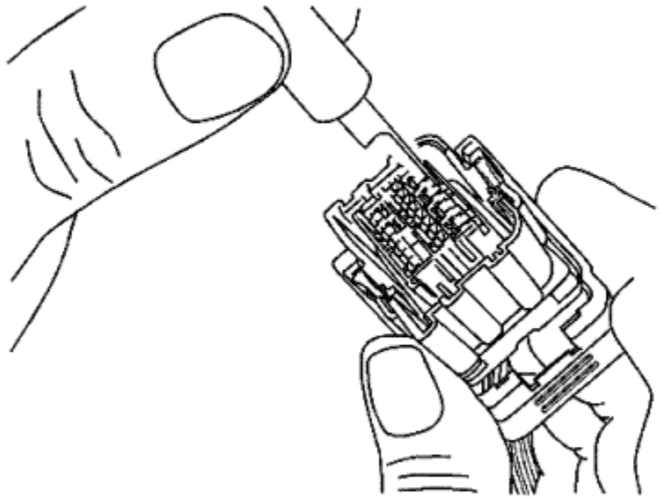

6. Using terminal release tool J-38125-215A, place the tip of the tool on the outside edge next to the terminal and depress the lock tab and remove the rear of the connector body.

Terminal Repair Procedure

Use the appropriate terminal and crimper in order to replace the terminal.

© Copyright Chevrolet. All rights reserved

Yazaki Connectors - 2-Way

Special Tools

- *EL-38125-580* Terminal Release Tool Kit
- *J-38125-553* Terminal Release Tool

For equivalent regional tools, refer to Special Tools .

Terminal Removal Procedure

1. Disconnect the connector from the component.

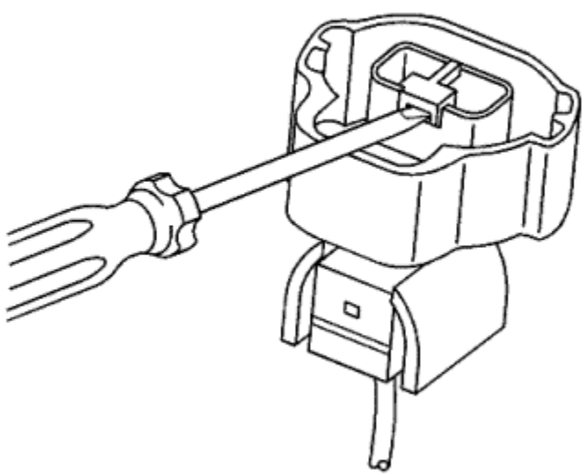

2. Insert a small flat-blade tool in the slot below the front loaded terminal position assurance (TPA) and prise up.
3. Remove the TPA by pulling it out of the connector.

4. Push the wire side of the terminal that is being removed toward the connector and hold it in position.

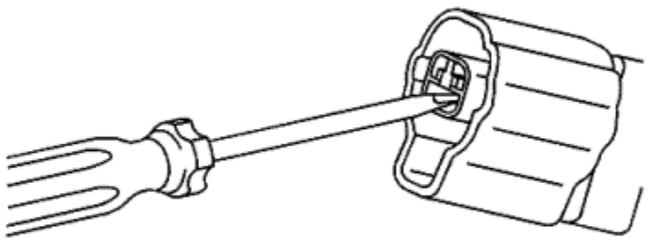

5. Insert the J-38125-553 at a slight upward angle into the cavity below the terminal to be removed. Ensure that the pointed on the end of the tool is facing the bottom of the terminal and it stays in contact with the terminal until it stops on the plastic terminal retainer.

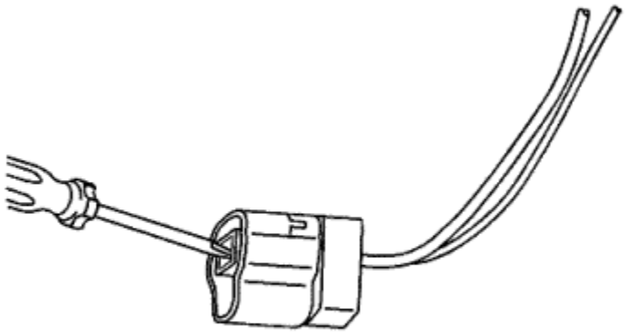

6. Gently prise the plastic terminal retainer down and carefully pull the terminal out of the connector. Always remember never use force when pulling a terminal out of a connector. If the terminal is difficult to remove, repeat the entire procedure.
7. Repair the terminal by following the Repairing Connector Terminals : Terminated Lead Repair procedure.
8. Insert the repaired terminal back into the cavity. Repeat the diagnostic procedure to verify the repair and reconnect the connector bodies.

© Copyright Chevrolet. All rights reserved

Yazaki Connectors - 16-Way

Special Tools

- *EL-38125-580* Terminal Release Tool Kit
- *J-38125-215* Terminal Release Tool

For equivalent regional tools, refer to Special Tools .

Terminal Removal Procedure

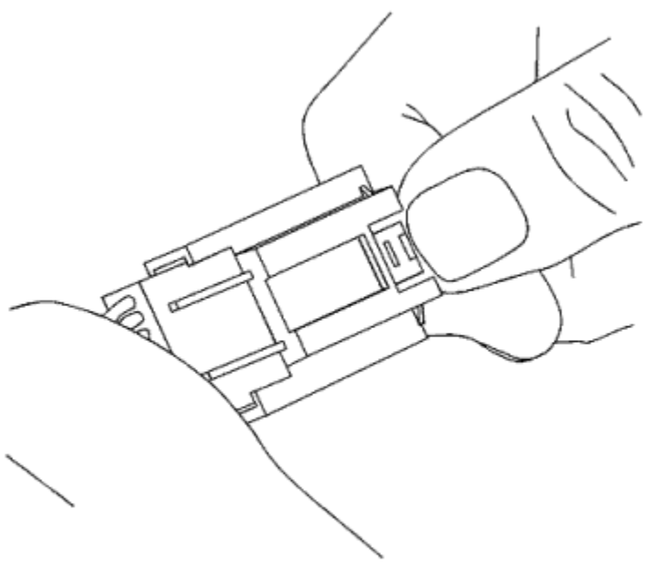

1. While depressing the lock, pull the two connector halves apart.

   Note: The terminal position assurance (TPA) is fragile and may break if not done carefully.

2. Use a small flat-blade tool to very carefully push the TPA toward the face of the connector on both sides of the connector.

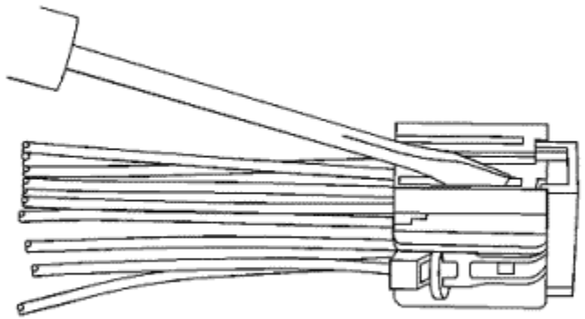

3. View of the male half of the connector with female terminals.

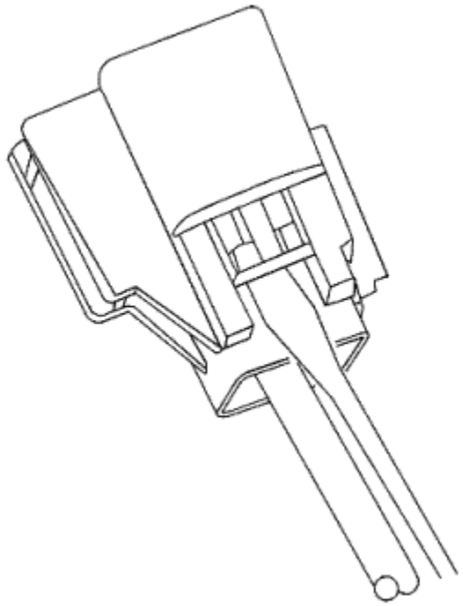

4. View of the female half of the connector with male terminals.
5. Use the J-38125-215 tool to release the terminals by inserting the tool into the terminal release cavity.

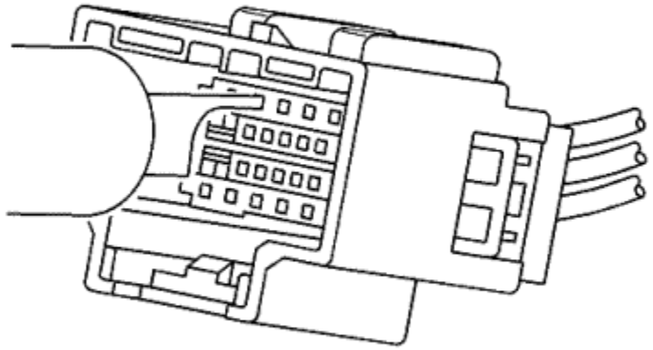

6. View of the female half of the connector with male terminals.

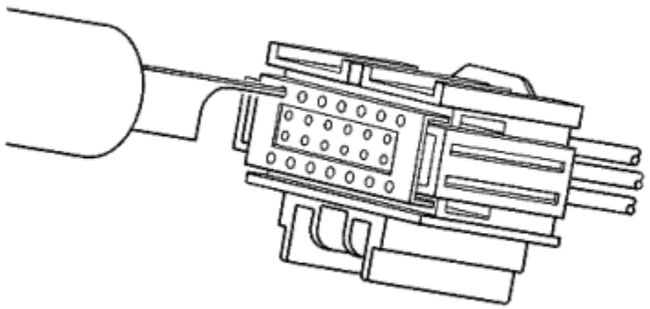

7. View of the male half of the connector with female terminals.
8. While holding the removal tool in place, gently pull the wire out of the back of the connector. Always remember never use force when pulling a terminal out of a connector.
9. Repair the terminal by following the Repairing Connector Terminals : Terminated Lead Repair procedure.
10. Insert the repaired terminal back into the cavity. Repeat the diagnostic procedure to verify the repair and reconnect the connector bodies.

© Copyright Chevrolet. All rights reserved

Repairing Connector Terminals - Terminated Lead Repair

Note: All repairs near the engine manifold, turbo engine and all exhaust pipes should follow the High Temperature Wiring Repairs procedures.

For high temperature wiring repairs, refer to High Temperature Wiring Repairs .

Terminated leads are terminals that are crimped onto wires. The terminated lead can be used throughout the vehicle since it is designed for temperatures up to 150°C. The length of the wire is 450 mm.

1. Use the connector end view to identify the correct terminated lead.
2. The terminated lead package should include a DuraSeal splice sleeve. If not, use the chart to in Splicing Copper Wire Using Splice Sleeves to identify the correct DuraSeal splice sleeve, refer to Splicing Copper Wire Using Splice Sleeves .

© Copyright Chevrolet. All rights reserved

Terminal Removal

Special Tools

- *EL-38125-580* Terminal Release Tool Kit
- *EL-35616* Terminal Test Probe Kit

For equivalent regional tools, refer to Special Tools .

Note: All repairs near the engine manifold, turbo engine and all exhaust pipes should follow the High Temperature Wiring Repair procedures.

1. Find the appropriate connector end view within the connector end view section. The connector end view has the following information:
   - Diagnostic probe tool
   - Terminal release tool
   - Terminal/terminated lead part numbers

   Note: Not using the proper test kit probe may cause damage to the terminal(s) that are probed.

2. Determine if a terminal is damaged.
   - Locate the diagnostic probe tool from the connector end view. The connector end view describes the colour and part number to help the technician find and use the correct tool.
   - Connect the probe tool to the Digital Multimeter.
   - Insert the probe tool into the cavity and follow the procedures from the Fault-finding with a Digital Multimeter .
3. Disconnect the connector body to perform the repair.
4. Use the following procedure to remove the terminal from the connector body.

   Note: Several procedures for specific connector bodies are called out in the Wiring Repairs section.

   - The terminal position assurance (TPA) and connector position assurance (CPA) should be removed before releasing the terminal for the connector body.
   - Look at the connector end view to locate the cavity of the damaged terminal and find the proper terminal release tool from the terminal release tool kit.

     Note: Using the incorrect terminal release tool can damage the connector body.

Note: Some terminals have a lever that must be disengaged before the terminal can be released.

- Insert the terminal release tool into the cavity.

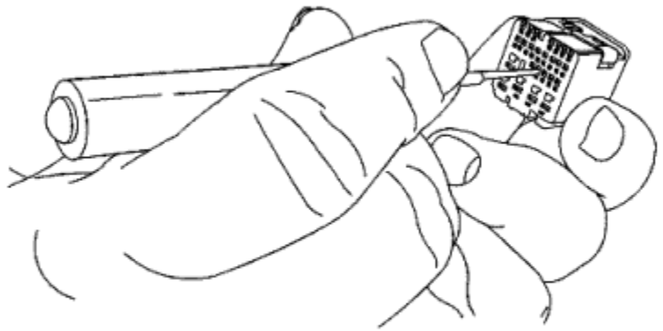

5. Gently pull the wire out of the back of the connector.
6. Repair the terminal by following the Repairing Connector Terminals : Terminated Lead Repair procedure.
7. Insert the repaired terminal back into the cavity. Repeat the diagnostic procedure to verify the repair and reconnect the connector bodies.

&#169© Copyright Chevrolet. All rights reserved

Relay Replacement - Attached to Wire Harness

Removal Procedure

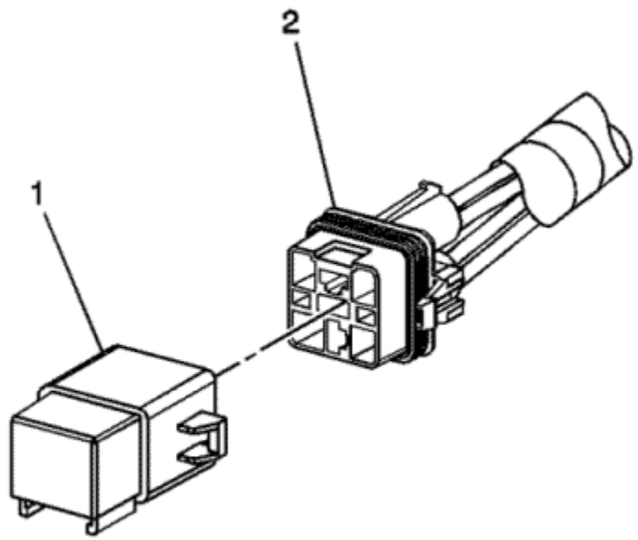

1. Locate the relay. Refer to the Master Electrical Component List to locate the relay in the vehicle.
2. Remove any fasteners which hold the relay in place.
3. Remove any connector position assurance (CPA) devices or secondary locks.

   Note: Use care when removing a relay in a wiring harness when the relay is secured by fasteners or tape.

4. Separate the relay (1) from the wire harness connector (2).

Installation Procedure

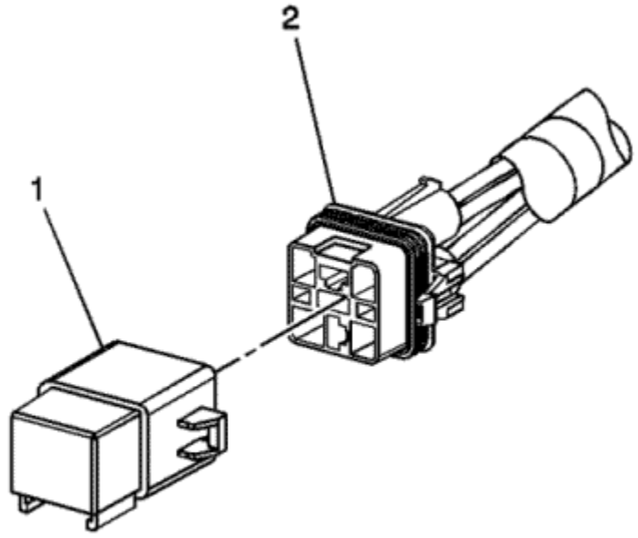

1. Connect the relay (1) to the wire harness connector (2).
2. Install any connector position assurance (CPA) devices or secondary locks.
3. Install the relay using any fasteners or tape that originally held the relay in place.

© Copyright Chevrolet. All rights reserved

Relay Replacement - Within an Electrical Center

Special Tools

J 43244 Relay Puller Pliers

Removal Procedure

1. Remove the electrical center cover.
2. Locate the relay. Refer to Electrical Centre Identification Views to locate the electrical centre where the relay exists.

Note:

- Always note the orientation of the relay.
- If equipped with a notch style relay; observe the location of the notch on the old relay to verify the new relay is installed with the notch in the same location.
- Ensure that the electrical centre is secure, as not to put added stress on the wires or terminals.

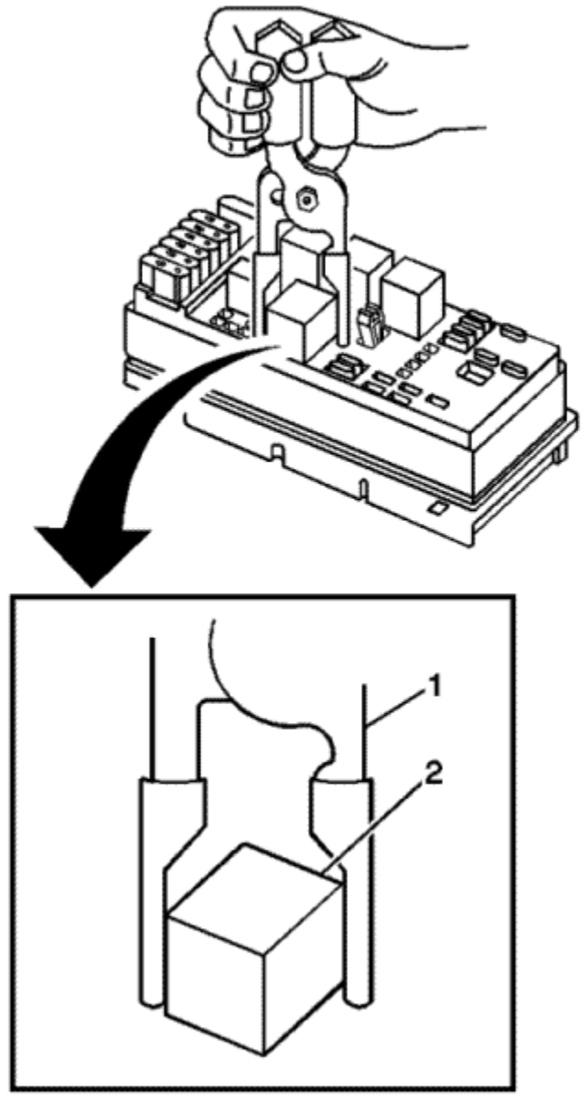

3. Using the J 43244 (1) position the tool on opposing corners of the relay (2).

Caution: Use J43244 to pull the relay straight out from the electrical centre terminals. The use of pliers or a flat bladed tool could damage the electrical centre.

4. Remove the relay (2) from the electrical centre.

Installation Procedure

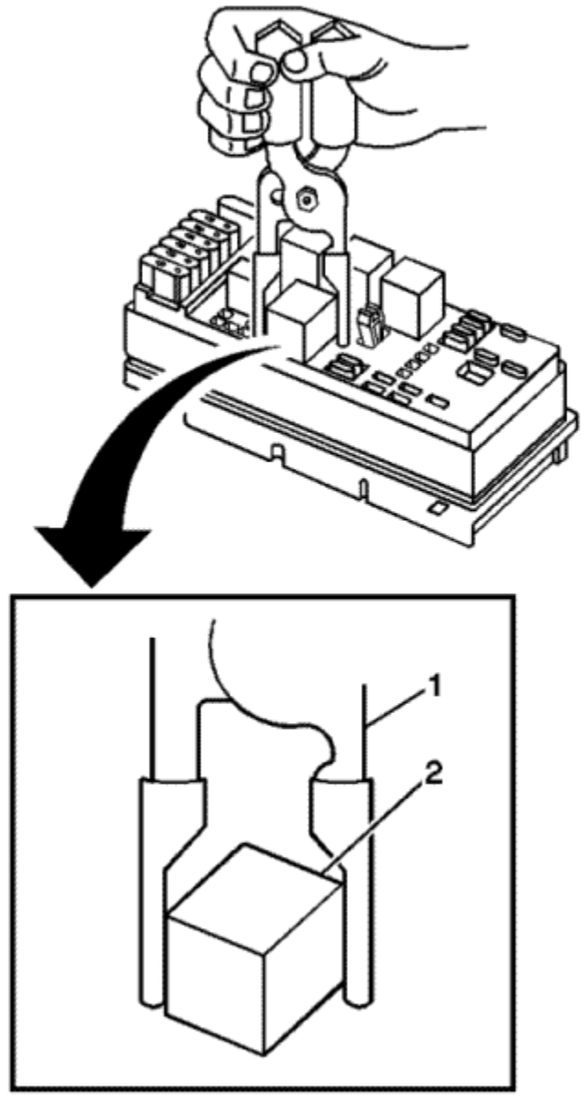

1. Install the relay (2) in the same position as removed.
2. Install the electrical center cover.

© Copyright Chevrolet. All rights reserved

Fuse Block Replacement

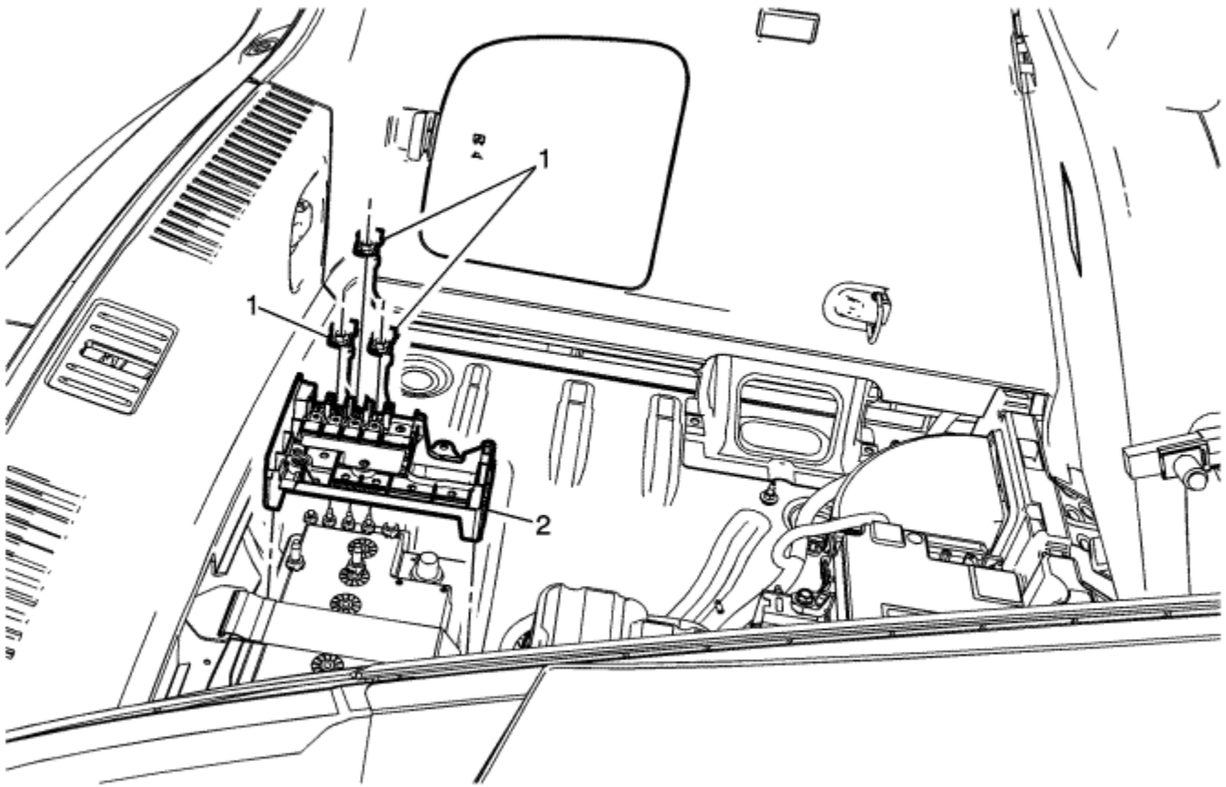

Callout	Component Name
Preliminary Procedures	

1. Remove the fuse block cover.
2. Remove the negative battery cable. Refer to Battery Negative Cable Disconnection and Connection .
3. Remove the battery positive cable from the fuse block only. Refer to Battery Positive Cable Replacement .

4. Remove the positive and negative cable (B+ APM module to battery fuse block) from the fuse block only. Refer to Battery Positive and Negative Cable Replacement .

1	Body Harness Terminal Nut (Qty: 3) **Caution:** Refer to Fastener Caution in the Preface section. **Tighten** 17 N·m (13 lb ft)
2	Fuse Block **Procedure** Loosen the battery positive post clamp nut and remove the fuse block.

© Copyright Chevrolet. All rights reserved

Accessory Wiring Junction Block Replacement

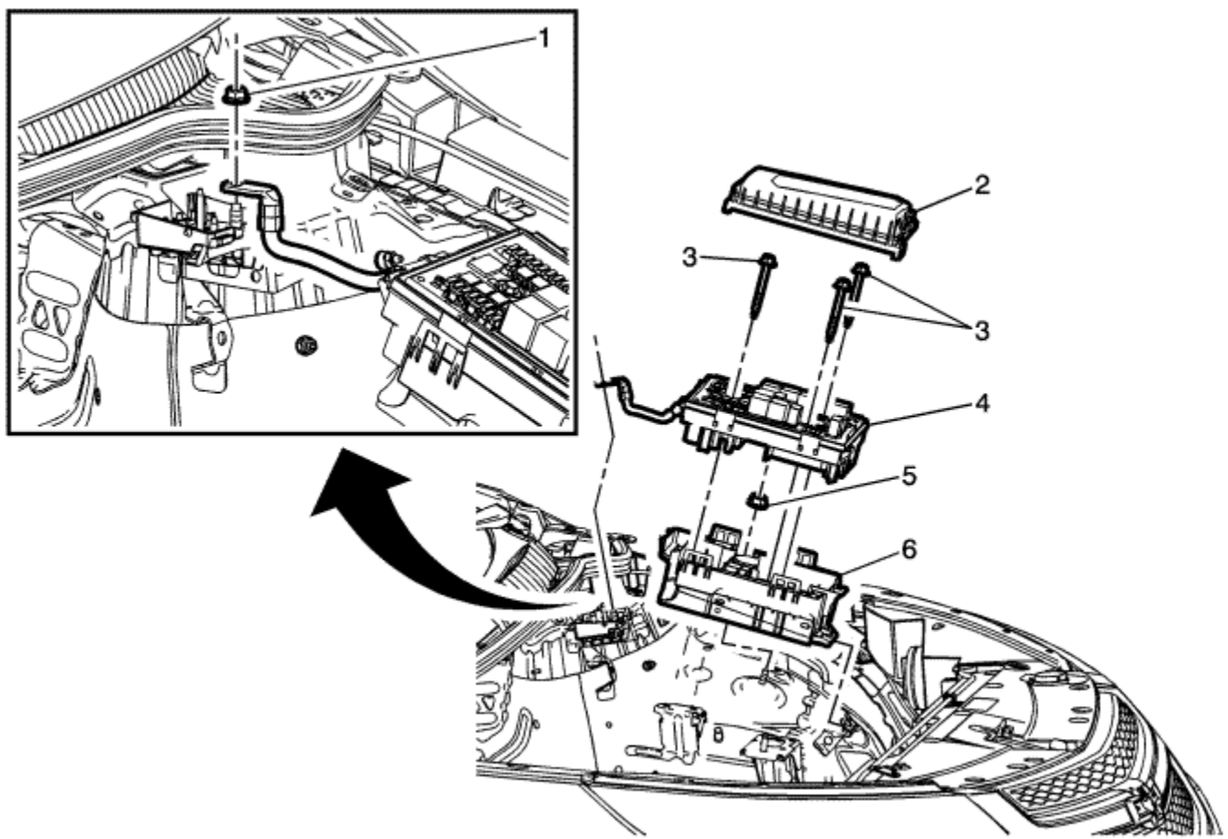

Callout	Component Name
Preliminary Procedure Disconnect the battery. Refer to Battery Negative Cable Disconnection and Connection .	
	Battery Cable Nut

1	**Caution:** Refer to Fastener Caution in the Preface section. **Procedure** Disconnect the battery positive cable from the junction block by removing the nut. **Note:** Remove the junction strut tower cover to access the battery positive nut. **Tighten** 7 N·m (62 lb in)
2	Accessory Wiring Junction Block Cover **Procedure** Remove the accessory wiring junction block cover by pushing in on the 3 retainer tabs located on the ends of the cover and lift. To reinstall, fit together the retainer tabs located on the ends of the cover and push down on the cover until the tabs on the ends of the cover lock into place.
3	Accessory Wiring Junction Block Harness Connector Bolt (Qty: 3) **Procedure** Remove the accessory wiring harness from the accessory wiring junction block retainer. **Tighten** 10 N·m (89 lb in)
4	Accessory Wiring Junction Block Retainer **Procedure** Remove the accessory wiring junction block retainer by pushing in on the 4 retainer tabs located on the sides of the retainer and lift. To reinstall, fit together the retainer tabs located on the sides of the retainer and push down on the retainer until the tabs on the sides of the cover lock into place.
5	Accessory Wiring Junction Block Retainer Base Nut **Tighten** 20 N·m (15 lb ft)
6	Accessory Wiring Junction Block Retainer Base **Procedure** Position the junction block retainer base alignment tab to the bracket first, then install the nut.

© Copyright Chevrolet. All rights reserved

Ignition and Start Switch Replacement

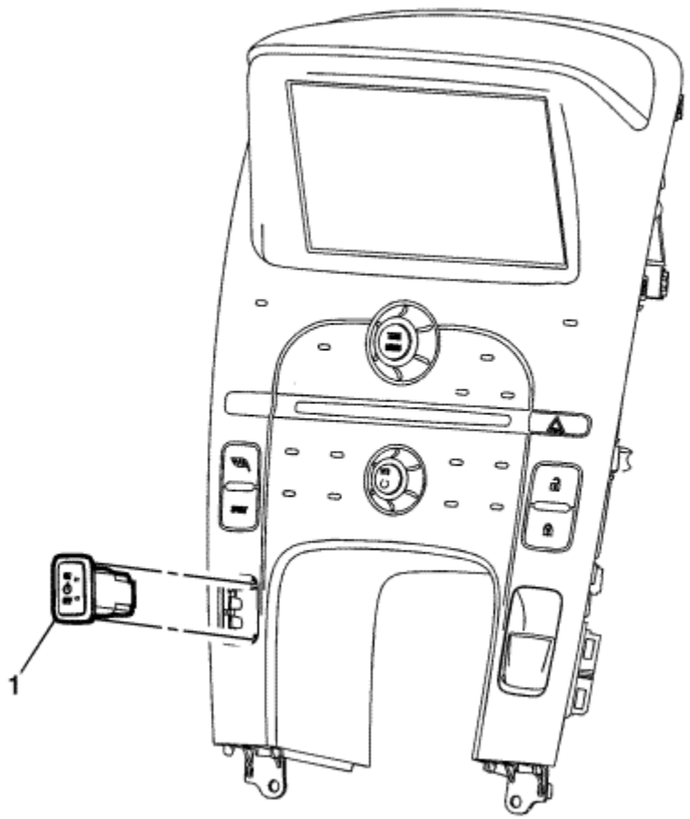

Callout	Component Name
Preliminary Procedure Remove the radio control assembly. Refer to Radio Control Assembly Replacement .	
	Ignition and Start Switch

1	**Procedure** 1. Disconnect electrical connection. 2. Depress tabs on switch and remove from the panel.

© Copyright Chevrolet. All rights reserved

Power Mode Description and Operation

Serial Data Power Mode Master

Power to many of this vehicles circuits is controlled by the module that is designated the power mode master. This vehicles power mode master is the body control module (BCM). The power button switch is a low-current push button switch with discrete power button switch signals to the power mode master for determination of the power mode that will be sent over the serial data circuits to the other modules that need this information. The power mode master will also activate relays and other direct outputs of the power mode master as needed. The power mode master determines which power mode (Vehicle Off, Vehicle On, Vehicle in Service Mode) is required and reports this information to other modules via serial data. Modules which have switched voltage inputs may operate in a default mode if the power mode serial data message does not match what the individual module can see from its own connections.

The power mode master receives power button switch signals and transmitter in range signals to identify the operators desired power mode. The Power Mode Parameters table below illustrates the correct state of these input parameters (circuits) in correspondence to the power button switch position and the transmitter to vehicle range:

Power Mode Parameters

Power Mode	Power Mode Transmitted	Push Button Ignition Switch (Power Button Switch Circuit Input to the BCM)	Push Button Ignition Switch Voltage Push Button Ignition Switch Voltage Input to the BCM	Key in Cylinder Switch/Key Fob in Vehicle (Transmitter in Range to the BCM Signal)
Transmitter in Range	Vehicle Off	Inactive	9 V	Yes
Transmitter out of Range	Vehicle Off	Inactive	9 V	No
Vehicle On Power Mode, then Press the Power Button Switch (Foot on or off the Brake Pedal); Transmitter in Vehicle	Vehicle Off	Active (pushed)/Inactive (not pushed)	6 V (pressed)	Yes
Vehicle Off Power Mode, then Press the Power Button Switch with foot on the Brake Pedal; Transmitter in Vehicle	Vehicle On	Active (pushed)/Inactive (not pushed)	6 V (pressed)	Yes
Vehicle Off Power Mode, then Press and Hold the Power Button Switch for over 5 seconds with foot off the Brake Pedal; Transmitter in Vehicle	Vehicle in Service Mode	Active (pushed)/Inactive (not pushed)	6 V (pressed)	Yes

Relay Controlled Power Mode

The BCM uses the discrete power button switch inputs, transmitter in range status, current power mode state and the brake pedal position state to distinguish the correct power mode (Vehicle Off, Vehicle On and Vehicle in Service Mode). The BCM, after determining the desired power mode, will activate the appropriate relays for that power mode and send the power mode message out to other modules in a serial data message.

The retained accessory power relay remains on for a timed period after the power mode transitions to Vehicle Off. Refer to Retained Accessory Power Description and Operation for more information on the retained accessory power function.

Push Button Start

The vehicle has an electronic push button start switch. The power button switch is equipped with two blue LED's, one for backlighting and one for Vehicle On indication or Vehicle In Service Mode indication. The power button switch light flashes when the driver door is open and the vehicle is not on. The flashing light will eventually time out. The power button switch light is on steady when in Vehicle On or Vehicle In Service Mode. When the vehicle is turned off, the power button switch light will turn off.

Vehicle On

This position is for driving and starting. The Vehicle On mode will be used for service (including maintenance and lubrication) and diagnostics on the electronic propulsion system or the gas engine. With the vehicle off, and the brake pedal applied, pressing the power button switch once will place the vehicle in Vehicle On mode. The instrument cluster displays an active fuel or battery gauge, along with an audio start-up cue, when the vehicle is ready to be driven. This could take up to 15 seconds at extremely cold temperatures. The gas engine will only start if needed. If the vehicle did not start, the instrument cluster will display a screen with inactive fuel and battery gauges. The electric propulsion system is active in this power mode. The gas engine will start if the bonnet is opened while in this power mode. The vehicle can be charged while in this power mode.

Vehicle In Service Mode

Note: The vehicle will not charge if the charging cable is attached to the vehicle after being placed into the Vehicle In Service Mode. Attach the charging cable to the vehicle before entering the Vehicle In Service Mode to charge the vehicle.

This power mode is available for service and diagnostics, and to verify the proper operation of the MIL as may be required for emission inspection purposes. The Vehicle In Service Mode will be used for service and diagnostics for items not requiring the electronic propulsion to be active or the operation of the gas engine. With the vehicle off, and the brake pedal not applied, pressing and holding the power button switch for more than 5 seconds will place the vehicle in Vehicle In Service Mode. The instruments and audio systems will operate as they do in Vehicle On mode, but the vehicle will not be able to be driven. The electric propulsion system is inactive in this power mode. The gas engine will not start if the bonnet is opened while in this power mode. The vehicle can only be charged in this power mode if the charging cable is attached before this power mode is enabled.

Vehicle Off

To turn the vehicle off, push the power button switch with the vehicle in P (Park). Retained Accessory Power (RAP) will remain active until the driver door is opened. Refer to Retained Accessory Power Description and Operation for more information on the retained accessory power function. When turning off the vehicle, if the vehicle is not in P (Park), the SHIFT TO PARK message is displayed in the Driver Information Centre (DIC). The electric propulsion system is inactive in this power mode. The gas engine will not start if the bonnet is opened in this power mode. The vehicle can be charged while in this power mode.

Battery Saver Mode

The battery saver mode reduces the parasitic load of some modules during overseas shipment or during vehicle storage conditions. This improves the drain time on the battery (up to 70 days without the battery going dead). When the vehicle is in transport/storage, some features may have reduced functionality while in the battery saver mode, such as disabling the Remote Function Actuator or content theft features.

The battery saver mode incorporates a latching relay that when enabled disconnects some modules from their ignition power or memory power sources. Battery saver mode is initiated by turning on the hazard flashers, placing the vehicle in Vehicle On mode, and then pushing the power button switch for greater than 15 seconds. The mode is disengaged by repeating the previous process causing the relay to latch in the other direction. Once the vehicle is in Vehicle On mode and the hazard flashers are on, pushing the power button switch for more than 15 seconds will latch the relay in the other direction. This feature can be used as many times as necessary if the vehicle is to be stored for an extended period of time.

BCM Awake/Sleep States

The BCM is able to control or perform all of the BCM functions in the awake state. The BCM enters the sleep state when active control or normal monitoring of system functions has stopped and a time limit has passed. The BCM must detect certain wake-up inputs before entering the awake state. The BCM monitors for these inputs during the sleep state.

The BCM will enter the awake state if any of the following wake-up inputs are detected:

- Activity on the serial data line (including wake-up circuits)
- Detection of a battery reconnect
- Any door open signal
- Headlamps ON
- Vehicle On
- Vehicle In Service Mode
- Park lamps ON
- Keyless entry or remote start message

The BCM will enter a sleep state when all of the following conditions exist:

- Vehicle Off, transmitter is out of range
- No activity exists on the serial data line (including wake-up circuits)
- No outputs are commanded.
- No delay timers are actively counting.
- No wake-up inputs are present.

If all these conditions are met, the BCM will enter a low power or sleep condition.

Serial Data Wake-Up

Control modules on the serial data wake-up circuit enable or disable communication based on the voltage level of this circuit.

&#169© Copyright Chevrolet. All rights reserved

Retained Accessory Power Description and Operation

Retained Accessory Power

The body control module (BCM) monitors the vehicle power modes, battery condition, and each door ajar/open switch status to determine whether the retained accessory power should be initiated or terminated. Retained accessory power is controlled by two different methods; relay control and serial data. Some modules receive a retained accessory power message from the BCM over the serial data circuits. Serial data controlled retained accessory power is deactivated as required by their modules retained accessory power mode operation. Other subsystems are activated directly by the BCM through a relay. Components and systems that are active in retained accessory power are also activated anytime the vehicle power mode is any state other than Vehicle OFF regardless of the door switch signals.

Relay Controlled Retained Accessory Power

The BCM keeps the relay energised during all power modes, except Vehicle Off. The relay is also energised for approximately 10 minutes after moving to the Vehicle OFF state and moving the transmitter out of range, providing no door is opened.

Relay controlled retained accessory power will end when one of the following conditions is met:

- The BCM receives an input from any door ajar or open switch indicating the opening of any door after entering the Vehicle Off state and the transmitter is out of range..

  Note: If the BCM is receiving any door ajar or open signal from those switches when the Vehicle Off state is entered and the transmitter is out of range, retained accessory power will not initiate.

- The BCM internal timer for the retained accessory power expires after approximately 10 minutes.
- The BCM detects a decrease in battery capacity below a prescribed limit.

Systems powered by the accessory relay during the retained accessory power mode are as follows:

- Accessory power outlet centre console compartment
- Cigar Lighter

Serial Data Controlled Retained Accessory Power

Retained accessory power systems controlled by serial data are as follows:

Radio

Radio retained accessory power activation / termination is the same as relay operation with one exception; the only door switch that will turn off the radio during retained accessory power is the driver door open switch.

&#169© Copyright Chevrolet. All rights reserved

Special Tools

Illustration	Tool Number / Description
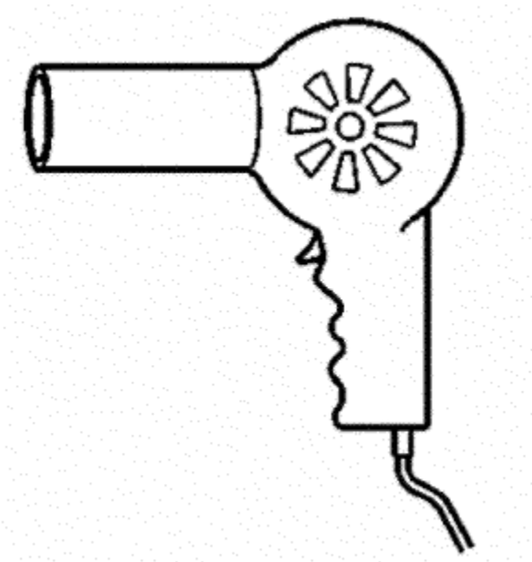	EL-25070 Heat Gun 500–700 F
	EL-35616 KM-609 Terminal Test Probe Kit

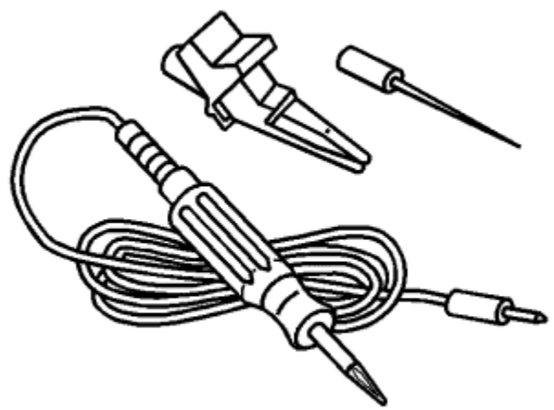	EL-35616-200 KM-J-34142-B Test Lamp – Probe Kit
	EL-35616-20F

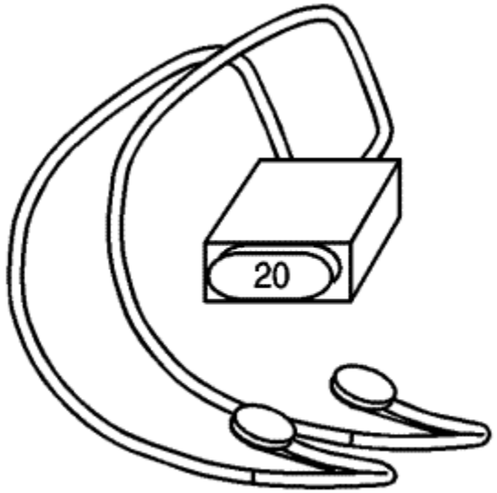	KM-963 Fused Jumper Wire
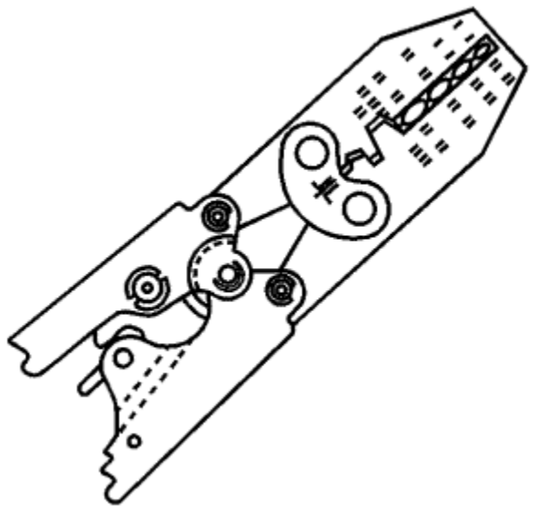	EL-38125-10 (Non-North America) J-38125-8 (North America Only) Splice Sleeve Crimp Tool
	EL-38125-580 Terminal Release Tool Kit

	EL-39200 (North America Only) MKM 874 (Non-North America) Digital Multimeter
	EL-42759 Ignition Switch Connector Release Tool

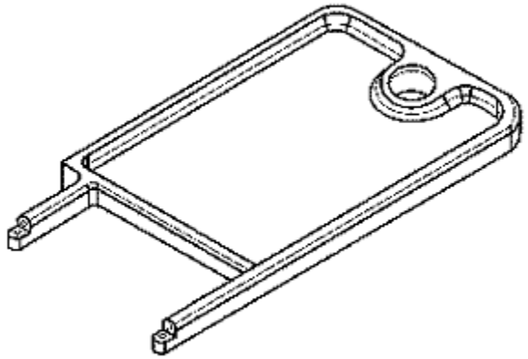	
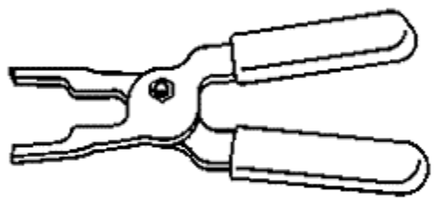	EL-43244 Relay Puller Pliers
	EL-47955

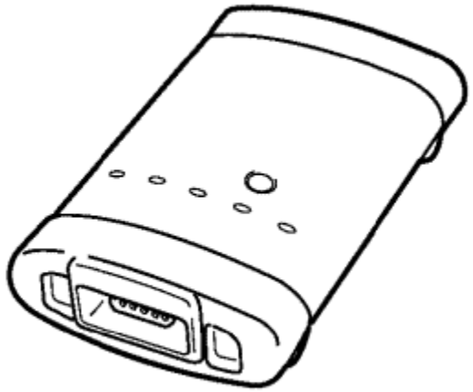	J-2534 Multi Diagnostic Interface MDI
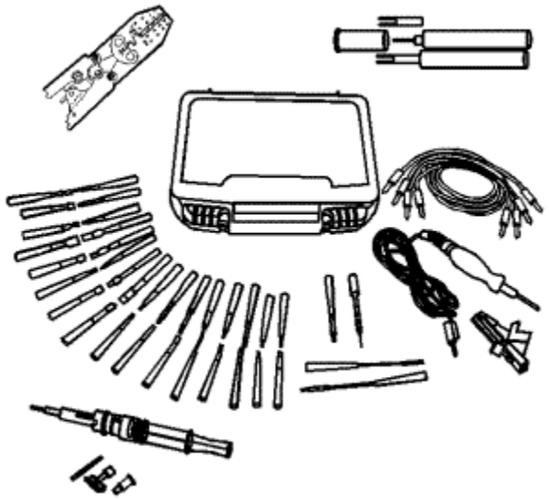	EL-50040 (Holden Only) Crimping Tool Kit
	EL-38125-5

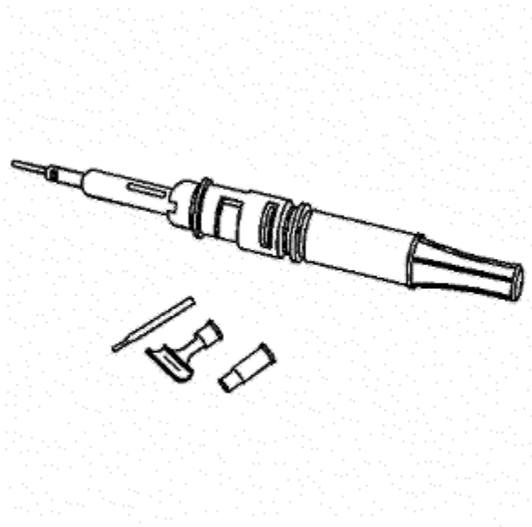	J-38125-5 Ultra Torch

© Copyright Chevrolet. All rights reserved

Fastener Tightening Specifications

Application	Specification	
	Metric	English
Theft Deterrent Module Fastener	1.5 N·m	13 lb in

© Copyright Chevrolet. All rights reserved

Immobiliser Schematics

Immobiliser

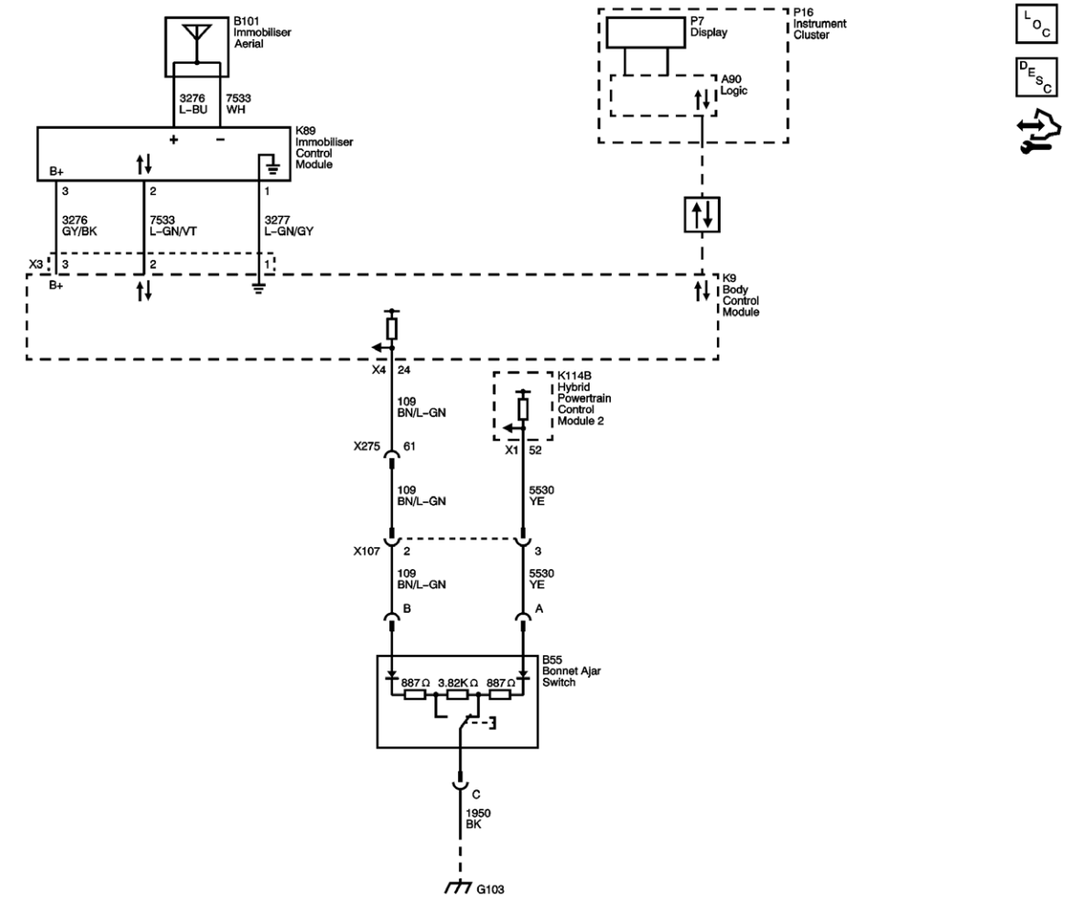

Master Electrical Component List

Immobiliser Description and Operation

Data Communication Schematics

G103, G104 and G105

© Copyright Chevrolet. All rights reserved

DTC B2955

Diagnostic Instructions

- Perform the Diagnostic System Check - Vehicle prior to using this diagnostic procedure.
- Review Strategy Based Diagnosis for an overview of the diagnostic approach.
- Diagnostic Procedure Instructions provides an overview of each diagnostic category.

DTC Descriptor

DTC B2955 00: Security Sensor Data Circuit Malfunction

Diagnostic Fault Information

Circuit	Short to Ground	Open/High Resistance	Short to Voltage	Signal Performance
B+	B2955 00	B2955 00	--	--
Serial Data	B2955 00	B2955 00	B2955 00	B2955 00
Low Reference	--	B2955 00	--	--

Circuit/System Description

When a keyless entry transmitter is inserted into the transmitter pocket/slot and the ignition mode switch is pressed, the transponder embedded in the transmitter is energised by the immobiliser aerial exciter coil. The transponder transmits a signal to the body control module (BCM). The BCM then compares this value to a value stored in memory. If the value is correct, the BCM will send the prerelease password via the serial data circuit to the engine control module (ECM). If the learned key code does not match or a transponder value is not received, the BCM will send the start disable password to the ECM.

Conditions for Running the DTC

Vehicle is ON or in Service Mode.

Conditions for Setting the DTC

The BCM detects a circuit fault on the immobiliser aerial circuits.

Action Taken When the DTC Sets

- Vehicle starting will be disabled.
- The security indicator in the instrument cluster will be illuminated. A service message will be displayed in the driver information centre.

Conditions for Clearing the DTC

- A current DTC will be cleared when the condition for setting the DTC are no longer present.
- A history DTC will be cleared after 100 malfunction-free ignition cycles or when a scan tool is used to clear DTCs.

Reference Information

Schematic Reference

Immobiliser Schematics

Connector End View Reference

Component Connector End Views

Description and Operation

Immobiliser Description and Operation

Electrical Information Reference

- Circuit Testing
- Connector Repairs
- Testing for Intermittent Conditions and Poor Connections
- Wiring Repairs

Scan Tool Reference

Control Module References for scan tool information

Circuit/System Testing

1. Vehicle OFF and all vehicle systems OFF, disconnect the harness connector at the K89 immobiliser control module. It may take up to 2 minutes for all vehicle systems to power down.
2. Test for less than 30 Ω between the low reference circuit terminal 1 and ground.

If 30 Ω or greater

2.1. Vehicle OFF, disconnect the harness connector at the K9 BCM.
2.2. Test for less than 2 Ω in the low reference circuit end to end.
If 2 Ω or greater, repair the open/high resistance in the circuit.
If less than 2 Ω, replace the K9 BCM.

If less than 30 Ω

3. Connect a test lamp between the B+ circuit terminal 3 and ground.
4. Verify the test lamp illuminates or flashes for three seconds after ignition mode switch is pressed.

If the test lamp does not illuminate

4.1. Vehicle OFF, disconnect the harness connector at the K9 BCM.
4.2. Test for infinite resistance between the B+ circuit and ground.
If less than infinite resistance, repair the short to ground on the circuit.
If infinite resistance
4.3. Test for less than 2 Ω in the B+ circuit end to end.
If 2 Ω or greater, repair the open/high resistance in the circuit.
If less than 2 Ω, replace the K9 BCM.

If the test lamp illuminates

5. Vehicle in Service Mode.
6. Test for 12-13 V between the serial data circuit terminal 2 and ground.

If less than 12 V

6.1. Vehicle OFF, disconnect the harness connector at the K9 BCM.
6.2. Test for infinite resistance between the serial data circuit and ground.
If less than infinite resistance, repair the short to ground on the circuit.
If infinite resistance
6.3. Test for less than 2 Ω in the serial data circuit end to end.
If 2 Ω or greater, repair the open/high resistance in the circuit.
If less than 2 Ω, replace the K9 BCM.

If greater than 13 V

6.1. Vehicle OFF, disconnect the harness connector at the K9 BCM, vehicle ON.
6.2. Test for less than 1 V between the signal circuit and ground.
If 1 V or greater, repair the short to voltage on the circuit.
If less than 1 V, replace the K9 BCM.

If within 12-13 V

7. Replace the K89 immobiliser control module.

8. Verify DTC B2955 is not set.
   If DTC B2955 is set
   Replace the K9 BCM.
   If DTC B2955 is not set or is set as history
9. All OK.

Repair Instructions

Perform the Diagnostic Repair Verification after completing the diagnostic procedure.

- Theft Deterrent Module Replacement
- Control Module References for BCM replacement, setup, and programming

&#169© Copyright Chevrolet. All rights reserved

DTC B3031

Diagnostic Instructions

- Perform the Diagnostic System Check - Vehicle prior to using this diagnostic procedure.
- Review Strategy Based Diagnosis for an overview of the diagnostic approach.
- Diagnostic Procedure Instructions provides an overview of each diagnostic category.

DTC Descriptor

DTC B3031 00: Security Controller In Learn Mode Malfunction

Circuit/System Description

When learning a coded key, the body control module (BCM) is placed in learn mode. DTC B3031 will set automatically as an indicator that the system is in learn mode and not as a fault indicator. Once the coded key is learned, learn mode will be exited and the DTC cleared. If the BCM does not exit learn mode, B3031 will remain current and indicate a fault. The instrument cluster security indicator will illuminate and the driver information centre will display a message.

Conditions for Running the DTC

The immobilizer system is the learn coded keys state.

Conditions for Setting the DTC

The DTC will set any time the BCM enters the learn coded keys state.

Action Taken When the DTC Sets

The security indicator will illuminate. The driver information centre will display a message.

Conditions for Clearing the DTC

- A current DTC B3031 will be cleared upon the successful exit of learn mode.
- A history DTC will be cleared after 100 malfunction-free ignition cycles or when a scan tool is used to clear DTCs.

Reference Information

Schematic Reference

Immobiliser Schematics

Connector End View Reference

Component Connector End Views

Description and Operation

Immobiliser Description and Operation

Electrical Information Reference

- Circuit Testing
- Connector Repairs
- Testing for Intermittent Conditions and Poor Connections
- Wiring Repairs

Scan Tool Reference

Control Module References for scan tool information

Circuit/System Verification

1. Verify all available keys are correct for the vehicle. This can be accomplished by comparing the part number that is laser etched on the key to the part number listed in the parts catalogue.
   If a key is not correct
   Replace the key
   If all keys are correct
2. Perform the Vehicle Key Relearn procedure. Refer to Key with Integrated Transmitter Programming .
3. Verify the BCM learns the vehicle key and exits the learn coded key state. The scan tool BCM Master Keys Learned parameter should increment to 1.
   If the BCM does not exit the learn coded key state after the programming attempt

Replace the K9 body control module

If the BCM exits the learn coded key state after the programming attempt

4. All OK.

Repair Instructions

Perform the Diagnostic Repair Verification after completing the repair.

Control Module References - for BCM replacement, setup, and programming

&#169© Copyright Chevrolet. All rights reserved

DTC B3055

Diagnostic Instructions

- Perform the Diagnostic System Check - Vehicle prior to using this diagnostic procedure.
- Review Strategy Based Diagnosis for an overview of the diagnostic approach.
- Diagnostic Procedure Instructions provides an overview of each diagnostic category.

DTC Descriptor

DTC B3055 00: No Transponder Modulation or No Transponder

Circuit/System Description

When an ignition key is inserted into the transmitter slot and the ignition mode is changed, the transponder embedded in the head of the key is energised by the exciter coils. The energised transponder transmits a signal that contains its unique value, which is received by the body control module (BCM). The BCM then compares this value to a value stored in memory. If the value is not correct, the BCM disables engine start.

Conditions for Running the DTC

Vehicle is ON or in Service Mode.

Conditions for Setting the DTC

The BCM is unable to measure the ignition key transponder value.

Action Taken When the DTC Sets

- Vehicle starting will be disabled.
- The security indicator will illuminate. A service message will be displayed in the driver information centre.

Conditions for Clearing the DTC

- A current DTC will be cleared when the BCM detects a valid transponder value from the ignition key.
- A history DTC will be cleared after 100 malfunction-free ignition cycles.

Reference Information

Schematic Reference

Immobiliser Schematics

Connector End View Reference

Component Connector End Views

Description and Operation

Immobiliser Description and Operation

Electrical Information Reference

- Circuit Testing
- Connector Repairs
- Testing for Intermittent Conditions and Poor Connections
- Wiring Repairs

Scan Tool Reference

Control Module References for scan tool information

Circuit/System Verification

1. Vehicle in Service Mode.
2. Verify all available keys are correct for the vehicle.
   If a key is not correct
   Replace the key
   If all keys are correct
3. Verify the scan tool BCM Key Part Number parameter reads a Key Part Number when turning the vehicle ON with each key.
   If a Key Part Number is not read
   Replace the appropriate key.

If a Key Part Number is read for each key

4. All OK.

Repair Instructions

Perform the Diagnostic Repair Verification after completing the diagnostic procedure.

Key with Integrated Transmitter Programming

&#169© Copyright Chevrolet. All rights reserved

DTC B3060

Diagnostic Instructions

- Perform the Diagnostic System Check - Vehicle prior to using this diagnostic procedure.
- Review Strategy Based Diagnosis for an overview of the diagnostic approach.
- Diagnostic Procedure Instructions provides an overview of each diagnostic category.

DTC Descriptor

DTC B3060 00 : Unprogrammed Transponder Identification Code Received Malfunction

Circuit/System Description

When an ignition key is inserted into the transmitter slot and the power mode is changed, the transponder embedded in the head of the key is energised by the exciter coils. The energised transponder transmits a signal that contains its unique value, which is received by the body control module (BCM). The BCM then compares this value to a value stored in memory. If the value is not correct, the BCM disables engine start.

Conditions for Running the DTC

Vehicle is ON or in Service Mode.

Conditions for Setting the DTC

The transponder value measured by the BCM is incorrect or not learned to the vehicle.

Action Taken When the DTC Sets

- Vehicle starting will be disabled.
- The security indicator in the instrument cluster will be illuminated. The driver information centre will display a service message.

Conditions for Clearing the DTC

- A current DTC will be cleared when the BCM detects a valid transponder value from the ignition key.
- A history DTC will be cleared after 100 malfunction-free ignition cycles or when a scan tool is used to clear DTCs.

Reference Information

Schematic Reference

Immobiliser Schematics

Connector End View Reference

Component Connector End Views

Description and Operation

Immobiliser Description and Operation

Electrical Information Reference

- Circuit Testing
- Connector Repairs
- Testing for Intermittent Conditions and Poor Connections
- Wiring Repairs

Scan Tool Reference

Control Module References for scan tool information

Circuit/System Verification

1. Perform the Vehicle Key Relearn procedure. Refer to Key with Integrated Transmitter Programming .
2. Verify the scan tool BCM Key Part Number parameter reads a Key Part Number when turning the vehicle ON with each key.
   If a Key Part Number is not read
   Replace the appropriate key.
   If a Key Part Number is read with each key
3. All OK.

Repair Instructions

Perform the Diagnostic Repair Verification after completing the diagnostic procedure.

Key with Integrated Transmitter Programming

&#169© Copyright Chevrolet. All rights reserved

DTC B389A

Diagnostic Instructions

- Perform the Diagnostic System Check - Vehicle prior to using this diagnostic procedure.
- Review Strategy Based Diagnosis for an overview of the diagnostic approach.
- Diagnostic Procedure Instructions provides an overview of each diagnostic category.

DTC Descriptor

DTC B389A 00: Environment Identification

Circuit/System Description

When certain modules are programmed and configured during installation, the module learns a specific environment identifier which is unique to the vehicle. The environment identifier is used to prevent the swapping of modules between vehicles. The body control module (BCM) is the keeper of the environment identifier. The instrument cluster, electronic brake control module (EBCM), HVAC control module, sensing and diagnostic module (SDM), engine control module (ECM), and steering column lock control module, if equipped, each learn the environment identifier during their configuration process. During vehicle operation, each of these modules compare their environment identifier to that of the BCM. If the identifiers match, vehicle starting is allowed. If an environment identifier does not match, vehicle starting is disabled.

Conditions for Running the DTC

Ignition is in the ACCESSORY or RUN position.

Conditions for Setting the DTC

An incorrect environment identifier is stored by the BCM.

Action Taken When the DTC Sets

- The security indicator in the instrument cluster will illuminate.
- Vehicle starting will be disabled.

Conditions for Clearing the DTC

A current DTC will be cleared when the BCM learns a correct environment identifier.

Diagnostic Aids

If BCM programming is not completed after BCM replacement, the environment identifier will not be learned. If DTC B389A sets immediately after the replacement and programming of a BCM, perform the programming procedure again.

Reference Information

Schematic Reference

Immobiliser Schematics

Connector End View Reference

Component Connector End Views

Description and Operation

Immobiliser Description and Operation

Electrical Information Reference

- Circuit Testing
- Connector Repairs
- Testing for Intermittent Conditions and Poor Connections
- Wiring Repairs

Scan Tool Reference

Control Module References for scan tool information

Circuit/System Verification

1. Verify DTC B389A did not set immediately following the replacement and programming of a BCM.
   If the DTC set immediately after the replacement and programming of a BCM
   The immobiliser learn procedure was not properly completed. Perform the BCM immobiliser learn using the Body Control Module IMMO Function with Existing

Transponder or Remote Key in SPS. Refer to Immobiliser System Component Programming .

If the DTC did not set immediately after the replacement and programming of a BCM

2. Verify DTC B3902 is not set in the any of the control modules listed below:
   - ECM
   - SDM
   - EBCM
   - HVAC control module
   - Instrument cluster
   - Steering column lock control module, if equipped

   If DTC B3902 is set in any of the modules

   Refer to DTC B3902 .

   If DTC B3902 is not set in any of the modules
3. Perform the BCM immobiliser learn using Body Control Module IMMO Function with Existing Transponder or Remote Key in SPS. Refer to Immobiliser System Component Programming .
4. Verify DTC B389A does not set after programming.

   If the DTC sets after programming

   Replace the K9 body control module.

   If the DTC does not set after programming
5. All OK.

Repair Instructions

Perform the Diagnostic Repair Verification after completing the repair.

Control Module References for BCM replacement, programming, and set-up

&#169© Copyright Chevrolet. All rights reserved

DTC B3902

Diagnostic Instructions

- Perform the Diagnostic System Check - Vehicle prior to using this diagnostic procedure.
- Review Strategy Based Diagnosis for an overview of the diagnostic approach.
- Diagnostic Procedure Instructions provides an overview of each diagnostic category.

DTC Descriptor

DTC B3902 00: Incorrect Immobiliser Identifier Received

Circuit/System Description

When certain modules are programmed and configured during installation, the module learns a specific environment identifier which is unique to the vehicle. The environment identifier is used to prevent the swapping of modules between vehicles. The body control module (BCM) is the keeper of the environment identifier. The instrument cluster, electronic brake control module (EBCM), HVAC control module, sensing and diagnostic module (SDM), engine control module (ECM), and steering column lock control module, if equipped, each learn the environment identifier during their configuration process. During vehicle operation, each of these modules compare their environment identifier to that of the BCM. If the identifiers match, vehicle starting is allowed. If an environment identifier does not match, vehicle starting is disabled.

Conditions for Running the DTC

Ignition is in the ACCESSORY or RUN position.

Conditions for Setting the DTC

The control module's environment identifier does not match the environment identifier stored by the BCM.

Action Taken When the DTC Sets

- The security indicator in the instrument cluster will illuminate.
- Vehicle starting will be disabled.

Conditions for Clearing the DTC

A current DTC will be cleared when the module learns a correct environment identifier.

Reference Information

Schematic Reference

Immobiliser Schematics

Connector End View Reference

Component Connector End Views

Description and Operation

Immobiliser Description and Operation

Electrical Information Reference

- Circuit Testing
- Connector Repairs
- Testing for Intermittent Conditions and Poor Connections
- Wiring Repairs

Scan Tool Reference

Control Module References for scan tool information

Circuit/System Verification

1. Perform the Programming and Setup procedure for the control module that set DTC B3902.
2. Verify DTC B3902 does not set after programming.
   If the DTC sets after programming
   Replace the control module that set the DTC.
   If the DTC does not set after programming
3. All OK.

Repair Instructions

Perform the Diagnostic Repair Verification after completing the repair.

Control Module References for instrument cluster, EBCM, HVAC control module, SDM, ECM, or steering column lock control module replacement, programming, and setup

&#169© Copyright Chevrolet. All rights reserved

DTC B3935

Diagnostic Instructions

- Perform the Diagnostic System Check - Vehicle prior to using this diagnostic procedure.
- Review Strategy Based Diagnosis for an overview of the diagnostic approach.
- Diagnostic Procedure Instructions provides an overview of each diagnostic category.

DTC Descriptor

DTC B3935 00: Transponder Authentication Error

Circuit/System Description

When an ignition key is inserted into the transmitter slot and the ignition mode is changed, the transponder embedded in the head of the key is energised by the exciter coils surrounding the ignition lock cylinder. The energised transponder transmits a signal that contains its unique value, which is received by the body control module (BCM). The BCM then compares this value to a value stored in memory. If the value is not correct, the BCM disables engine start.

Conditions for Running the DTC

- Ignition is in the Accessory or Run position.
- A valid transponder value has been read.

Conditions for Setting the DTC

- The transponder value is valid and matches the value stored in the BCM memory.
- The transponder calculation of the challenge from the BCM does not match the BCM calculation.

Action Taken When the DTC Sets

- Vehicle starting will be disabled.
- The security indicator will illuminate. The driver information centre will display a service message.

Conditions for Clearing the DTC

- A current DTC will be cleared when a valid transponder value has been read and authenticated.
- A history DTC will be cleared after 100 malfunction-free ignition cycles.

Reference Information

Schematic Reference

Immobiliser Schematics

Connector End View Reference

Component Connector End Views

Description and Operation

Immobiliser Description and Operation

Electrical Information Reference

- Circuit Testing
- Connector Repairs
- Testing for Intermittent Conditions and Poor Connections
- Wiring Repairs

Scan Tool Reference

Control Module References for scan tool information

Circuit/System Verification

1. Replace the suspected inoperative or malfunctioning key.
2. Verify DTC B3935 is not set as current.
   If the DTC is set as current
   Replace the K9 BCM.
   If the DTC is set as history
3. All OK.

Repair Instructions

Perform the Diagnostic Repair Verification after completing the diagnostic procedure.

- Key with Integrated Transmitter Programming
- Control Module References for BCM replacement, setup, and programming

&#169© Copyright Chevrolet. All rights reserved

DTC B3976

Diagnostic Instructions

- Perform the Diagnostic System Check - Vehicle prior to using this diagnostic procedure.
- Review Strategy Based Diagnosis for an overview of the diagnostic approach.
- Diagnostic Procedure Instructions provides an overview of each diagnostic category.

DTC Descriptor

DTC B3976 00: Unconfigured Transponder

Circuit/System Description

When an ignition key is inserted into the transmitter slot and the ignition mode is changed, the transponder embedded in the head of the key is energised by the exciter coils surrounding the ignition lock cylinder. The energised transponder transmits a signal that contains its unique value, which is received by the body control module (BCM). The BCM then compares this value to a value stored in memory. If the value is not correct, the BCM disables engine start.

Conditions for Running the DTC

- Ignition is in the Accessory or Run position.
- The BCM is in the learn coded key state.

Conditions for Setting the DTC

The BCM has determined the current key is not configured as a proper vehicle key.

Action Taken When the DTC Sets

- Vehicle starting will be disabled.
- The security indicator in the instrument cluster will be illuminated. A service message will be displayed in the driver information centre.

Conditions for Clearing the DTC

- A current DTC will be cleared when the BCM detects a properly configured vehicle key.
- A history DTC will be cleared after 100 malfunction-free ignition cycles or when a scan tool is used to clear DTCs.

Reference Information

Schematic Reference

Immobiliser Schematics

Connector End View Reference

Component Connector End Views

Description and Operation

Immobiliser Description and Operation

Electrical Information Reference

- Circuit Testing
- Connector Repairs
- Testing for Intermittent Conditions and Poor Connections
- Wiring Repairs

Scan Tool Reference

Control Module References for scan tool information

Circuit/System Verification

1. Verify the engine starts with each available key.
   If the engine does not start with a key
   Replace the key.
   If the engine starts with all keys
2. All OK.

Repair Instructions

Perform the Diagnostic Repair Verification after completing the diagnostic procedure.

Key with Integrated Transmitter Programming

&#169© Copyright Chevrolet. All rights reserved

DTC B3984

Diagnostic Instructions

- Perform the Diagnostic System Check - Vehicle prior to using this diagnostic procedure.
- Review Strategy Based Diagnosis for an overview of the diagnostic approach.
- Diagnostic Procedure Instructions provides an overview of each diagnostic category.

DTC Descriptor

DTC B3984 00: Device 1 Environment Identifier Not Programmable

Circuit/System Description

When certain modules are programmed and configured during installation, the module learns a specific environment identifier which is unique to the vehicle. The environment identifier is used to prevent the swapping of modules between vehicles. The body control module (BCM) is the keeper of the environment identifier. The instrument cluster, electronic brake control module (EBCM), HVAC control module, sensing and diagnostic module (SDM), engine control module (ECM), and steering column lock control module, if equipped, each learn the environment identifier during their configuration process. During vehicle operation, each of these modules compare their environment identifier to that of the BCM. If the identifiers match, vehicle starting is allowed. If an environment identifier does not match, vehicle starting is disabled.

Conditions for Running the DTC

Ignition is in the ACCESSORY or RUN position.

Conditions for Setting the DTC

An incorrect environment identifier is programmed or no environment identifier is programmed.

Action Taken When the DTC Sets

- The security indicator in the instrument cluster will illuminate.
- Vehicle starting will be disabled.

Conditions for Clearing the DTC

A current DTC will be cleared when the module learns a correct environment identifier.

Reference Information

Schematic Reference

Immobiliser Schematics

Connector End View Reference

Component Connector End Views

Description and Operation

Immobiliser Description and Operation

Electrical Information Reference

- Circuit Testing
- Connector Repairs
- Testing for Intermittent Conditions and Poor Connections
- Wiring Repairs

Scan Tool Reference

Control Module References for scan tool information

Circuit/System Verification

1. Perform the Programming and Setup procedure for the control module that set DTC B3984.
2. Verify DTC B3984 does not set after programming.
   If the DTC sets after programming
   Replace the control module that set the DTC.
   If the DTC does not set after programming
3. All OK.

Repair Instructions

Perform the Diagnostic Repair Verification after completing the repair.

Control Module References for instrument cluster, EBCM, HVAC control module, SDM, ECM, or steering column lock control module replacement, programming, and setup

&#169© Copyright Chevrolet. All rights reserved

DTC P0513

Diagnostic Instructions

- Perform the Diagnostic System Check - Vehicle prior to using this diagnostic procedure.
- Review Strategy Based Diagnosis for an overview of the diagnostic approach.
- Diagnostic Procedure Instructions provides an overview of each diagnostic category.

DTC Descriptor

DTC P0513: Immobiliser Key Incorrect

Circuit/System Description

The body control module (BCM) sends the pre-release information to the engine control module (ECM) via the serial data circuit. The ECM then sends a challenge to the BCM. Both the ECM and BCM perform a calculation on this challenge. If the calculated response from the BCM equals the calculation performed by the ECM, the ECM will allow vehicle starting.

Conditions for Running the DTC

Vehicle is ON or in Service Mode.

Conditions for Setting the DTC

The calculated response from the BCM does not equal the calculation performed by the ECM.

Action Taken When the DTC Sets

- The security indicator in the instrument cluster will illuminate.
- Vehicle starting will be disabled.

Conditions for Clearing the DTC

- A current DTC P0513 will be cleared when a valid calculation is received.
- A history DTC will be cleared after 40 malfunction-free ignition cycles or when a scan tool is used to clear DTCs.

Diagnostic Aids

The key referenced in the DTC descriptor does not refer to the vehicle key. In this case, key is referring to the challenge response.

Reference Information

Schematic Reference

Immobiliser Schematics

Connector End View Reference

Component Connector End Views

Description and Operation

Immobiliser Description and Operation

Electrical Information Reference

- Circuit Testing
- Connector Repairs
- Testing for Intermittent Conditions and Poor Connections
- Wiring Repairs

Scan Tool Reference

Control Module References for scan tool information

Circuit/System Verification

Note: Because of normal system communications between the BCM and ECM, any immobiliser DTCs set in the BCM must be diagnosed prior to the diagnosis immobiliser DTCs set in the ECM.

1. Perform the BCM immobiliser learn using the Body Control Module IMMO Function with Existing Transponder or Remote Key in SPS. Refer to Immobiliser System Component Programming .

2. Verify the BCM successfully completes the learn procedure and the engine starts.
   If the BCM does not successfully learn or the engine does not start
   Perform the ECM immobiliser learn using the Engine Control Module IMMO Learn in SPS. Refer to Immobiliser System Component Programming .
   If the vehicle starts
3. All OK

&#169© Copyright Chevrolet. All rights reserved

DTC P0633

Diagnostic Instructions

- Perform the Diagnostic System Check - Vehicle prior to using this diagnostic procedure.
- Review Strategy Based Diagnosis for an overview of the diagnostic approach.
- Diagnostic Procedure Instructions provides an overview of each diagnostic category.

DTC Descriptor

DTC P0633: Immobiliser Key Not Programmed

Circuit/System Description

When learning the immobiliser data, as well as the challenge and response sequence, the engine control module (ECM) is placed in learn mode. DTC P0633 will set automatically as an indicator that the system is in learn mode and not as a fault indicator. Once the immobiliser data and challenge/response are learned, learn mode will be exited when the engine is successfully started. If the ECM does not exit learn mode, DTC P0633 will remain current and indicate a fault.

Conditions for Running the DTC

The ECM is in learn mode.

Conditions for Setting the DTC

DTC P0633 will set any time the ECM enters learn mode.

Action Taken When the DTC Sets

The security indicator in the instrument cluster will illuminate.

Conditions for Clearing the DTC

- A current DTC P0633 will be cleared upon a successful engine start after exit of learn mode.
- A history DTC will be cleared after 100 malfunction-free ignition cycles or when a scan tool is used to clear DTCs.

Reference Information

Schematic Reference

Immobiliser Schematics

Connector End View Reference

Component Connector End Views

Description and Operation

Immobiliser Description and Operation

Electrical Information Reference

- Circuit Testing
- Connector Repairs
- Testing for Intermittent Conditions and Poor Connections
- Wiring Repairs

Scan Tool Reference

Control Module References for scan tool information

Circuit/System Verification

Note: DTC P0633 will clear upon a successful engine start. Any malfunction that will cause a no-start condition will prevent DTC P0633 from clearing. Prior to diagnosing DTC P0633, ensure that all power mode and engine control systems are operating properly and all conditions that may cause a no-start have been corrected.

1. Verify there are no immobiliser DTCs set in the BCM.
   If any immobiliser DTCs are set in the BCM
   Refer to Diagnostic Trouble Code (DTC) List - Vehicle .
   If no immobiliser DTCs are set in the BCM
2. Perform the ECM immobiliser learn using the Engine Control Module IMMO Learn in SPS. Refer to Immobiliser System Component Programming .
3. Verify the engine starts after the ECM completes the learn procedure.

If the engine does not start

Replace the K20 engine control module.

If the engine starts

4. All OK

Repair Instructions

Perform the Diagnostic Repair Verification after completing the repair.

Control Module References for ECM replacement, programming, and setup

&#169© Copyright Chevrolet. All rights reserved

DTC P1631

Diagnostic Instructions

- Perform the Diagnostic System Check - Vehicle prior to using this diagnostic procedure.
- Review Strategy Based Diagnosis for an overview of the diagnostic approach.
- Diagnostic Procedure Instructions provides an overview of each diagnostic category.

DTC Descriptor

DTC P1631: Immobiliser Fuel Enable Signal Not Correct

Circuit/System Description

The body control module (BCM) sends the pre-release information to the engine control module (ECM) via the serial data circuit. The ECM then sends a challenge to the BCM. Both the ECM and BCM perform a calculation on this challenge. If the calculated response from the BCM equals the calculation performed by the ECM, the ECM will allow vehicle starting. The BCM follows this action by sending the remaining immobiliser data to the ECM. If the immobiliser data sent by the BCM matches that stored by the ECM, the ECM will allow the engine to remain running.

Conditions for Running the DTC

Vehicle is ON or in Service Mode.

Conditions for Setting the DTC

The ECM receives incorrect immobiliser data from the BCM.

Action Taken When the DTC Sets

- The security indicator in the instrument cluster will illuminate.
- Vehicle starting will be disabled.

Conditions for Clearing the DTC

- A current DTC P1631 will be cleared when correct immobiliser data is received.
- A history DTC will be cleared after 40 malfunction-free ignition cycles or when a scan tool is used to clear DTCs.

Reference Information

Schematic Reference

Immobiliser Schematics

Connector End View Reference

Component Connector End Views

Description and Operation

Immobiliser Description and Operation

Electrical Information Reference

- Circuit Testing
- Connector Repairs
- Testing for Intermittent Conditions and Poor Connections
- Wiring Repairs

Scan Tool Reference

Control Module References for scan tool information

Circuit/System Verification

Note: Because of normal system communications between the BCM and ECM, any immobiliser DTCs set in the BCM must be diagnosed prior to the diagnosis immobiliser DTCs set in the ECM.

1. Perform the BCM immobiliser learn using the Body Control Module IMMO Function with Existing Transponder or Remote Key in SPS. Refer to Immobiliser System Component Programming .
2. Verify the BCM successfully completes the learn procedure and the engine starts.
   If the BCM does not successfully learn or the engine does not start

Perform the ECM immobiliser learn using the Engine Control Module IMMO Learn in SPS. Refer to Immobiliser System Component Programming .

If the vehicle starts

3. All OK

&#169© Copyright Chevrolet. All rights reserved

Theft Deterrent Module Replacement

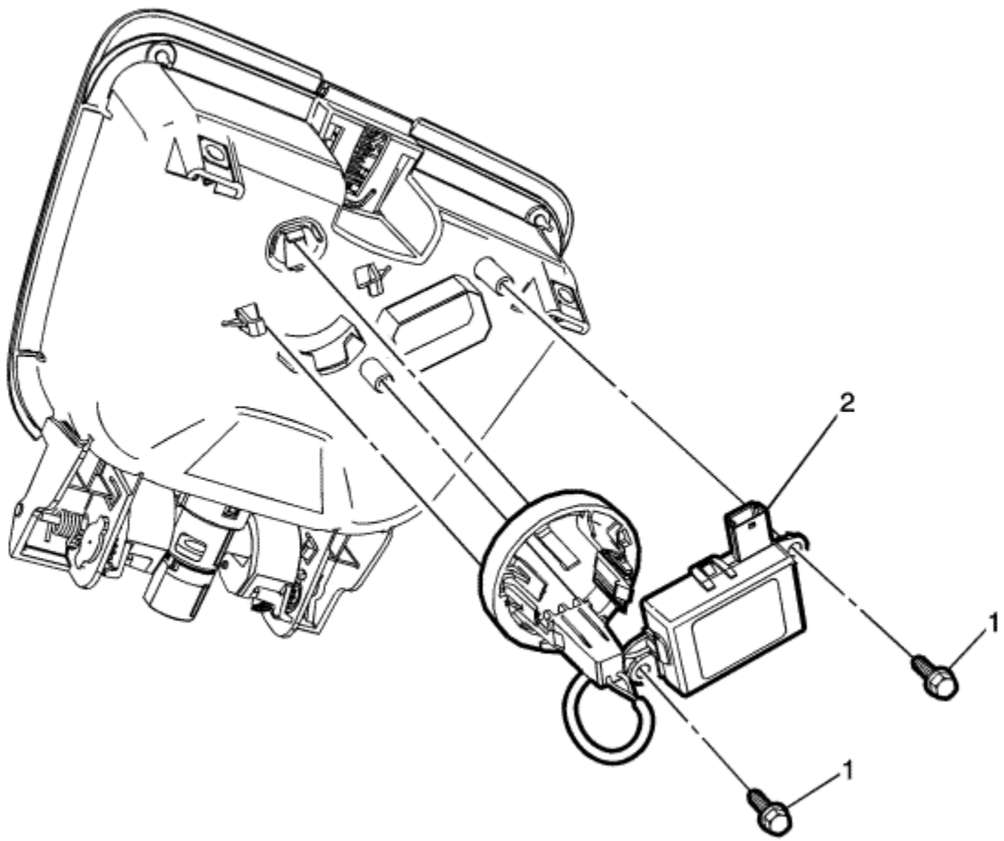

Callout	Component Name
Preliminary Procedure 1. Disconnect the battery negative cable. Refer to Battery Negative Cable Disconnection and Connection . 2. Remove the instrument panel upper centre compartment. Refer to Instrument Panel Upper Centre Compartment Replacement .	

1	Theft Deterrent Module Fastener (Qty: 2) **Caution:** Refer to Fastener Caution in the Preface section. **Tighten** 1.5 N·m(13 lb in)
2	Theft Deterrent Module **Procedure** 1. Disconnect the electrical connector. 2. Disengage the tabs on the module. 3. Refer to Control Module References for programming and set up procedures.

© Copyright Chevrolet. All rights reserved

Immobiliser System Component Programming

This procedure will learn the immobiliser function and require more than 15 minutes to complete. If the battery voltage is low, charge the battery before proceeding with the learn. If the body control module (BCM) or engine control module (ECM) have been replaced, they must be programmed before performing this learn procedure.

Depending on the immobiliser function being learned or the component replaced, different learn functions are required to be performed. These learn functions are as follows:

Function name on SPS tool:	Function description:	When the function should be used:	Notes:
Body Control Module IMMO Function with Existing Transponder or Remote Key	The BCM will relearn the immobiliser passwords and data while reusing the existing vehicle keys	The BCM has been replaced and the existing vehicle keys are being reused or a diagnostic has instructed to perform the learn	-
Body Control Module IMMO Function with New Transponder or Remote Key	The BCM will relearn the immobiliser passwords and data while using new vehicle keys	The BCM has been replaced and new vehicle keys are being reused	-
Engine Control Module IMMO Learn	The ECM will relearn the immobiliser passwords and data	The ECM has been replaced or a diagnostic has instructed to perform the learn	-
Engine Control Module and Body Control Module IMMO Learn	The ECM and BCM will learn new immobiliser passwords and data	Both the ECM and BCM have been replaced (this selection will REQUIRE new vehicle keys be used)	Because both the ECM and BCM have been replaced and are learning new immobiliser passwords and data, all vehicle keys must also be replaced
Program Transponder or Remote Key (Add)	A new vehicle key will learn the immobilizer passwords and data	A new vehicle key is being added (does not affect other vehicle keys)	This function may not be available in all sales regions
Program Transponder or Remote Key (Delete)	All existing vehicle keys will be invalidated and any desired keys are relearned	All vehicle keys are desired to be invalidated and certain keys relearned or a diagnostic has instructed to perform the learn	This procedure may be used if a customer has had their keys lost or stolen and wishes to invalidate the keys, making them unable to start the vehicle

1. Connect a scan tool to the vehicle and access SPS.
2. Vehicle in Service Mode, engine OFF.
3. Ensure that all power consuming devices are turned OFF on the vehicle.
4. Select SPS application and follow the onscreen instructions.
5. Select Reprogram ECU.
6. Select IMMO Immobilizer Learn - Setup.
7. Select the appropriate programming function based on the component that was replaced or is being programmed. Refer to the table at the top of this document for assistance in choosing the correct programming function.

Note:

- At multiple times during the learn procedure, SPS will instruct you to turn the vehicle to Service Mode. Make sure the vehicle is actually in the Service Mode before continuing on the SPS terminal. If the vehicle is not in the Service Mode, the learn procedure will fail.
- The transmitter slot is located inside the upper instrument panel storage compartment. The rubber mat lining at the bottom of the compartment needs to be removed to access the slot.

8. Follow the on-screen instructions.
9. After programming all keys "Programming Complete" is displayed.
10. Press and hold the vehicle ON/OFF switch for 15 seconds.
11. Press the lock and unlock button on each transmitter that was programmed. This will awaken each transmitter and allow passive and active keyless entry functions to be established.
12. With a scan tool, clear any DTCs.
13. Verify each key is operating properly. Operate each of the keyless entry functions using the buttons on the transmitter and then start the vehicle. When verifying operation, make sure that no other keys are near the vehicle.

&#169© Copyright Chevrolet. All rights reserved

Key with Integrated Transmitter Programming

Keys can be programming in various ways using the procedures outlined below. Using the Replacing Keys procedures will first erase all the known keys from the vehicle. Any existing keys and any new keys will then be programmed. This procedure should be used any time a key is required to be unlearned or erased from a vehicle. If a new key is being learned to a vehicle to replace a damaged, inoperative, or stolen key, the Replacing Keys procedure must be used. This ensures that the old key cannot be used to access or start the vehicle after programming.

The Adding Keys procedure does not erase any keys prior to programming. The procedure will simply program the key into the next available slot. The Adding Keys procedure should only be used when adding an additional key to the vehicle. The Adding Keys procedure should never be used to program a key to a vehicle that is having a key replaced, regardless of the cause for the replacement.

Replacing Keys (With SPS)

Note:

- This procedure will unlearn all previously learned keys. All keys that are to be programmed must be with the vehicle.
- This procedure may be used with or without existing learned keys being present.
- This procedure will take more than 15 minutes to complete.
- A total of 8 keys maybe be learned to a single vehicle.
- This procedure will only learn the vehicle key information. This procedure will not learn any immobiliser information between the body control module (BCM) and engine control module (ECM).
- If the battery voltage is low, charge the battery before continuing with the procedure.

1. Connect a scan tool to the vehicle and access SPS. Refer to Service Programming System (SPS) .
2. Ensure that all power consuming devices are turned OFF on the vehicle.
3. Select the SPS application and follow the onscreen instructions.
4. Select Reprogram ECU.
5. Select IMMO Immobilizer Learn - Setup.
6. Select the Program Transponder or Remote Key (Delete) function.

   Note:

   - At multiple times during the learn procedure, SPS will instruct you to turn the vehicle to the Service Mode position. Make sure the vehicle is actually in the Service Mode before continuing on the SPS terminal. If the igniting is not in the run mode, the learn procedure will fail.
   - The key slot is located inside the upper instrument panel storage compartment. The rubber mat lining at the bottom of the compartment needs to be removed to

access the slot.

7. Follow the on-screen instructions.
8. After programming all keys, Programming Complete, is displayed.
9. Press and hold the ignition mode switch for 15 seconds.
10. Press the lock and unlock button on each key that was programmed. This will awaken each key and allow passive and active keyless entry functions to be established.
11. With a scan tool, clear any DTCs.
12. Verify each key is operating properly. Operate each of the keyless entry functions using the buttons on the key and then start the vehicle. When verifying operation, make sure that no other keys are near the vehicle.

Adding Keys (With SPS)

Note:

- This procedure may be used with or without existing learned keys being present.
- This procedure will take more than 15 minutes to complete.
- A total of 8 keys maybe be learned to a single vehicle.
- This procedure will only learn the vehicle key information. This procedure will not learn any immobiliser information between the body control module (BCM) and engine control module (ECM).
- If the battery voltage is low, charge the battery before continuing with the procedure.

1. Connect a scan tool to the vehicle and access SPS. Refer to Service Programming System (SPS) .
2. Ensure that all power consuming devices are turned OFF on the vehicle.
3. Select the SPS application and follow the onscreen instructions.
4. Select Reprogram ECU.
5. Select IMMO Immobilizer Learn - Setup.
6. Select the Program Transponder or Remote Key (Add) function.

   Note:
   - At multiple times during the learn procedure, SPS will instruct you to turn the vehicle to the Service Mode. Make sure the vehicle is actually in the Service Mode before continuing on the SPS terminal. If the igniting is not in the run mode, the learn procedure will fail.
   - The key slot is located inside the upper instrument panel storage compartment. The rubber mat lining at the bottom of the compartment needs to be removed to access the slot.

7. Follow the on-screen instructions.
8. After programming all keys, Programming Complete, is displayed.
9. Press and hold the ignition mode switch for 15 seconds.
10. Press the lock and unlock button on each key that was programmed. This will awaken each key and allow passive and active keyless entry functions to be established.
11. With a scan tool, clear any DTCs.
12. Verify each key is operating properly. Operate each of the keyless entry functions using the buttons on the key and then start the vehicle. When verifying operation, make sure that no other keys are near the vehicle.

&#169© Copyright Chevrolet. All rights reserved

Immobiliser Description and Operation

The immobiliser system functions are provided by the keyless entry control module, the remote control door lock receiver, the body control module (BCM) and the engine control module (ECM), as well as any modules which store and report the environment identifier. The keyless start system uses low frequency aerials in three different locations on the vehicle to determine the location of the transmitter. Multiple aerials are used to ensure complete coverage of the vehicle interior and rear compartment.

When the vehicle ON/OFF switch is pressed, the low frequency aerials emit a challenge to the keyless entry transmitter. The transmitter receives this challenge and emits it's response as an RF message. The transmitter transmits a signal that contains its unique value, which is received by the BCM through the remote control door lock receiver. The BCM then compares this value to a value stored in memory. The BCM also monitors various modules to determine if the stored environment identifiers match.

If both the environment identifier and the value received from the transponder match, the BCM will send the prerelease password via serial data to the ECM. If the encrypted code's unique value is incorrect or the environment identifier does not match, the BCM will send the fuel disable message to the ECM.

When the ECM receives the BCM prerelease password, the ECM will challenge the password. The ECM sends this challenge to the BCM via serial data. Both the ECM and BCM perform a calculation on this challenge. If the BCM calculated response to the challenge equals the calculation performed by the ECM, the ECM will allow vehicle starting.

If RF communication is interrupted, a "No Remote Detected" message will be displayed on the DIC. In these cases, the extended transmitter key blade can be placed in the transmitter slot located in the upper instrument panel storage compartment, under the rubber mat. The immobiliser aerial coil is located directly beneath the transmitter slot. Placing the transmitter in the pocket will create a low powered coupling between the transmitter and immobiliser aerial, allowing communications to occur and enabling vehicle starting.

The components of the theft system are as follows:

- BCM
- ECM
- Immobiliser aerial
- Ignition key or keyless entry transmitter
- Security indicator
- Various modules which store and report the environment identifier

Body Control Module (BCM)

The immobiliser system is an integral part of the BCM and is controlled internally within the BCM. The BCM can learn up to 8 keys (transponder values).

The BCM uses the following inputs:

- Environment identifier exchange with various modules
- Encrypted code from the vehicle key, received by the immobiliser aerial

The BCM uses the following outputs:

- Prerelease password communication with ECM
- Challenge/response with ECM

When the vehicle ON/OFF switch is pressed, the low frequency aerials emit a challenge to the keyless entry transmitter. The transmitter receives this challenge and emits it's response as an RF message. The transmitter transmits a signal that contains its unique value, which is received by the BCM through the remote control door lock receiver. The BCM then compares this value to a value stored in memory. The BCM then performs one of the following functions:

- If the encrypted code value matches the values stored in the BCM memory, the BCM will send the prerelease password to the ECM via serial data.
- If the encrypted code unique value does not match the value stored in the BCM, the BCM will send the start disable message to the ECM via serial data.
- If the BCM is unable to measure the ignition key encrypted code value, the BCM will not send any messages to the ECM.

Engine Control Module (ECM)

When the ECM receives the BCM prerelease password, the ECM will challenge the password. The ECM sends this challenge to the BCM via the serial data circuit. Both the ECM and BCM perform a calculation on this challenge. If the calculated response from the BCM equals the calculation performed by the ECM, the ECM will allow vehicle starting.

The ECM will disable vehicle starting if any of the following immobilisation conditions occur:

- The prerelease password is invalid.
- The start disable password is sent by the BCM.
- No passwords are received. There is no communication with the BCM.
- The BCM calculated response to the challenge does not equal the calculation performed by the ECM.

Immobiliser Aerial

The immobiliser aerial contains an immobiliser coil. The coil passively powers the transponder located in the ignition key when the key is in the transmitter slot. When powered, the key transmits its unique value to the immobiliser aerial, which is then relayed to the BCM via a LIN serial data circuit. The immobiliser aerial also receives B+ and ground from the BCM.

The immobiliser aerial is used to:

1. Learn keys
2. To start vehicle with or without RF interference

3. To start vehicle when key battery is dead

Keyless Entry Transmitter

Each keyless entry transmitter contains a transponder with a unique encrypted value. The transponder's encrypted value is fixed and unable to be changed. The immobiliser system uses the transponder value to determine if a valid transmitter is being used to start the vehicle.

Environment Identifier

Various modules throughout the vehicle learn a specific environment identifier during the module programming process. The environment identifier is learned by each individual module and matches the environment identifier stored in the BCM. Prior to starting after a battery disconnect, each of the modules which store a environment identifier will compare their identifier to that of the identifier stored in the BCM. If all the identifiers match, the engine starting process will continue. If the environment identifiers do not match, engine starting will be disabled.

Security Indicator

The BCM will command the instrument panel cluster to illuminate the security indicator when the vehicle is in Service Mode to indicate a fault has occurred within the immobiliser system and when the engine starting is disabled.

&#169© Copyright Chevrolet. All rights reserved

Object Detection Schematics

Figure 1: Front Park Assist
Figure 2: Rear Park Assist
Figure 3: Rearview Camera

© Copyright Chevrolet. All rights reserved

DTC B0954, B0955, B0956, or B0957

Diagnostic Instructions

- Perform the Diagnostic System Check - Vehicle prior to using this diagnostic procedure.
- Review Strategy Based Diagnosis for an overview of the diagnostic approach.
- Diagnostic Procedure Instructions provides an overview of each diagnostic category.

DTC Descriptors

DTC B0954 01: Parking Assist Front Sensor Left Corner Circuit Short to Battery

DTC B0954 06: Parking Assist Front Sensor Left Corner Circuit Low Voltage/Open

DTC B0954 08: Parking Assist Front Sensor Left Corner Circuit Performance - Signal Invalid

DTC B0954 21: Parking Assist Front Sensor Left Corner Circuit Incorrect Period

DTC B0954 3A: Parking Assist Front Sensor Left Corner Circuit Incorrect Component Installed

DTC B0955 01: Parking Assist Front Sensor Left Middle Circuit Short to Battery

DTC B0955 06: Parking Assist Front Sensor Left Middle Circuit Low Voltage/Open

DTC B0955 08: Parking Assist Front Sensor Left Middle Circuit Performance - Signal Invalid

DTC B0955 21: Parking Assist Front Sensor Left Middle Circuit Incorrect Period

DTC B0955 3A: Parking Assist Front Sensor Left Middle Circuit Incorrect Component Installed

DTC B0956 01: Parking Assist Front Sensor Right Middle Circuit Short to Battery

DTC B0956 06: Parking Assist Front Sensor Right Middle Circuit Low Voltage/Open

DTC B0956 08: Parking Assist Front Sensor Right Middle Circuit Performance - Signal Invalid

DTC B0956 21: Parking Assist Front Sensor Right Middle Circuit Incorrect Period

DTC B0956 3A: Parking Assist Front Sensor Right Middle Circuit Incorrect Component Installed

DTC B0957 01: Parking Assist Front Sensor Right Corner Circuit Short to Battery

DTC B0957 06: Parking Assist Front Sensor Right Corner Circuit Low Voltage/Open

DTC B0957 08: Parking Assist Front Sensor Right Corner Circuit Performance - Signal Invalid

DTC B0957 21: Parking Assist Front Sensor Right Corner Circuit Incorrect Period

DTC B0957 3A: Parking Assist Front Sensor Right Corner Circuit Incorrect Component Installed

Diagnostic Fault Information

Circuit	Short to Ground	Open/High Resistance	Short to Voltage	Signal Performance
8V Reference	B1405 02	B0954 06, B0955 06, B0956 06, B0957 06, B0958 06, B0959 06, B0960 06, B0961 06, B1405 03	B0954 06, B0955 06, B0956 06, B0957 06, B0958 06, B0959 06, B0960 06, B0961 06, B1405 07	-
Left Front Object Sensor Signal	B0954 06	B0954 06	B0954 01	B0954 08, B0954 21
Left Middle Front Object Sensor Signal	B0955 06	B0955 06	B0955 01	B0955 08, B0955 21
Right Middle Front Object Sensor Signal	B0956 06	B0956 06	B0956 01	B0956 08, B0956 21
Right Front Object Sensor Signal	B0957 06	B0957 06	B0957 01	B0957 08, B0957 21
Low Reference	--	B0954 06, B0955 06, B0956 06, B0957 06, B0958 06, B0959 06, B0960 06, B0961 06	--	--

Circuit/System Description

The object sensors are 3-wire sensors that are used to determine the distance between the vehicle and an object of interest. The parking assist control module supplies 8 V to the object sensors via the 8 V reference circuit and provides ground via the low reference circuit. The parking assist control module triggers the sensors in a sequential loop. After each sensor transmits, the parking assist control module uses the sensor echo received through the signal circuit to calculate the distance and position of an object.

Conditions for Running the DTC

- Vehicle in Service Mode or ON.
- The park assist is activated. The activation takes place through putting in the reverse gear or through operating the park assist switch.

Conditions for Setting the DTC

B0954 01, B0955 01, B0956 01, or B0957 01

The parking assist control module has detected the voltage at the sensor circuit is greater than 11.5 V or the object sensor is not grounded.

B0954 06, B0955 06, B0956 06, or B0957 06

The parking assist control module has detected the voltage at the sensor circuit is less than 0.5 V.

B0954 08, B0955 08, B0956 08, or B0957 08

The parking assist control module has received an invalid signal.

B0954 21, B0955 21, B0956 21, or B0957 21

The object sensor determines no change in the position of an object while the vehicle is in motion.

B0954 3A, B0955 3A, B0956 3A, or B0957 3A

The parking assist control module determines the wrong sensor type is installed.

Action Taken When the DTC Sets

- The parking assist is disabled.
- The driver information centre displays SERVICE PARK ASSIST.

Conditions for Clearing the DTC

The condition for setting the DTC is no longer present.

Reference Information

Schematic Reference

Object Detection Schematics

Connector End View Reference

Component Connector End Views

Description and Operation

Object Detection Description and Operation : UVC → UD5

Electrical Information Reference

- Circuit Testing
- Connector Repairs
- Testing for Intermittent Conditions and Poor Connections
- Wiring Repairs

Scan Tool Reference

Control Module References for scan tool information

Circuit/System Verification

1. Verify that DTC B1405 is not present.
   If DTC is present, refer to DTC B1405 .
2. Verify that DTC B0954 01, B0955 01, B0956 01 or B0957 01 is not present.
   If DTC is present, check the appropriate sensor for contamination with mud, ice or snow. If no contamination is diagnosed, refer to Circuit/System Testing.
3. Verify that DTC B0954 21, B0955 21, B0956 21 or B0957 21 is not present.
   If DTC is present, check the respective sensor for contamination by mud, ice or snow. If no contamination is diagnosed, replace the sensor.
4. Verify that DTC B0954 3A, B0955 3A, B0956 3A or B0957 3A is not present.
   If DTC is present, replace the respective sensor with a sensor of correct sensor type.
5. Vehicle in Service Mode, transmission in REVERSE, verify the scan tool Parking Assist System Status parameter displays Enabled.

Circuit/System Testing

1. Vehicle OFF for 30 s, disconnect the harness connector at the appropriate front object sensor.
2. Test for less than 30 Ω between the low reference circuit terminal 2 and ground.

If greater than the specified value, test the low reference circuit for an open/high resistance. If the circuit tests normal, replace the K41 Front and Rear Parking Assist Control Module.

3. Vehicle in Service Mode, activate the park assist, test for 7.5-9.0 V between the 8 V reference circuit terminal 1 and ground.
   If less than the specified range, test the 8 V reference circuit for an open/high resistance. If the circuit tests normal, replace the K41 Front and Rear Parking Assist Control Module.
4. Vehicle OFF, remove the malfunctioning object sensor and swap locations with another properly functioning front object sensor. Connect the harness connector at both sensors.
5. Vehicle in Service Mode, verify the DTC is set for the new location in which the malfunctioning sensor is installed.
   If the DTC does not set for the new location, test the signal circuit terminal 3 for a short to voltage, short to ground, or an open/high resistance. If the circuit tests normal, replace the K41 Front and Rear Parking Assist Control Module.
6. If the DTC sets for the new location in which the malfunctioning sensor is installed, replace the appropriate front object sensor.

Repair Instructions

Perform the Diagnostic Repair Verification after completing the diagnostic procedure.

- Front Parking Assist Alarm Sensor Replacement
- Control Module References for parking assist control module replacement, programming and set-up

&#169© Copyright Chevrolet. All rights reserved

DTC B0958, B0959, B0960, or B0961

Diagnostic Instructions

- Perform the Diagnostic System Check - Vehicle prior to using this diagnostic procedure.
- Review Strategy Based Diagnosis for an overview of the diagnostic approach.
- Diagnostic Procedure Instructions provides an overview of each diagnostic category.

DTC Descriptors

DTC B0958 01: Parking Assist Rear Sensor Left Corner Circuit Short to Battery

DTC B0958 06: Parking Assist Rear Sensor Left Corner Circuit Low Voltage/Open

DTC B0958 08: Parking Assist Rear Sensor Left Corner Circuit Performance - Signal Invalid

DTC B0958 21: Parking Assist Rear Sensor Left Corner Circuit Incorrect Period

DTC B0958 3A: Parking Assist Rear Sensor Left Corner Circuit Incorrect Component Installed

DTC B0959 01: Parking Assist Rear Sensor Left Middle Circuit Short to Battery

DTC B0959 06: Parking Assist Rear Sensor Left Middle Circuit Low Voltage/Open

DTC B0959 08: Parking Assist Rear Sensor Left Middle Circuit Performance - Signal Invalid

DTC B0959 21: Parking Assist Rear Sensor Left Middle Circuit Incorrect Period

DTC B0959 3A: Parking Assist Rear Sensor Left Middle Circuit Incorrect Component Installed

DTC B0960 01: Parking Assist Rear Sensor Right Middle Circuit Short to Battery

DTC B0960 06: Parking Assist Rear Sensor Right Middle Circuit Low Voltage/Open

DTC B0960 08: Parking Assist Rear Sensor Right Middle Circuit Performance - Signal Invalid

DTC B0960 21: Parking Assist Rear Sensor Right Middle Circuit Incorrect Period

DTC B0960 3A: Parking Assist Rear Sensor Right Middle Circuit Incorrect Component Installed

DTC B0961 01: Parking Assist Rear Sensor Right Corner Circuit Short to Battery

DTC B0961 06: Parking Assist Rear Sensor Right Corner Circuit Low Voltage/Open

DTC B0961 08: Parking Assist Rear Sensor Right Corner Circuit Performance - Signal Invalid

DTC B0961 21: Parking Assist Rear Sensor Right Corner Circuit Incorrect Period

DTC B0961 3A: Parking Assist Rear Sensor Right Corner Circuit Incorrect Component Installed

Diagnostic Fault Information

Circuit	Short to Ground	Open/High Resistance	Short to Voltage	Signal Performance
8V Reference	B1405 02	B0954 06, B0955 06, B0956 06, B0957 06, B0958 06, B0959 06, B0960 06, B0961 06, B1405 03	B0954 06, B0955 06, B0956 06, B0957 06, B0958 06, B0959 06, B0960 06, B0961 06, B1405 07	--
Left Rear Object Sensor Signal	B0958 06	B0958 06	B0958 01	B0958 08, B0958 21
Left Middle Rear Object Sensor Signal	B0959 06	B0959 06	B0959 01	B0959 08, B0959 21
Right Middle Rear Object Sensor Signal	B0960 06	B0960 06	B0960 01	B0960 08, B0960 21
Right Rear Object Sensor Signal	B0961 06	B0961 06	B0961 01	B0961 08, B0961 21
Low Reference	--	B0954 06, B0955 06, B0956 06, B0957 06, B0958 06, B0959 06, B0960 06, B0961 06	--	--

Circuit/System Description

The object sensors are 3-wire sensors that are used to determine the distance between the vehicle and an object of interest. The parking assist control module supplies 8 V to the object sensors via the 8 V reference circuit and provides ground via the low reference circuit. The parking assist control module triggers the sensors in a sequential loop. After each sensor transmits, the parking assist control module uses the sensor echo received through the signal circuit to calculate the distance and position of an object.

Conditions for Running the DTC

- Vehicle in Service Mode or ON.
- The parking assist is activated. The activation takes place through putting in the reverse gear or through operating the park assist switch.

Conditions for Setting the DTC

B0958 01, B0959 01, B0960 01, or B0961 01

The parking assist control module has detected the voltage at the sensor circuit is greater than 11.5 V or the object sensor is not grounded.

B0958 06, B0959 06, B0960 06, or B0961 06

The parking assist control module has detected the voltage at the sensor circuit less than 0.5 V.

B0958 08, B0959 08, B0960 08, or B0961 08

The parking assist control module has received an invalid signal.

B0958 21, B0959 21, B0960 21, or B0961 21

The object sensor determines no change in the position of an object while the vehicle is in motion.

B0958 3A, B0959 3A, B0960 3A, or B0961 3A

The parking assist control module determines the wrong sensor type is installed.

Action Taken When the DTC Sets

- The parking assist is disabled.
- The driver information centre displays SERVICE PARK ASSIST.

Conditions for Clearing the DTC

The condition for setting the DTC is no longer present.

Reference Information

Schematic Reference

Object Detection Schematics

Connector End View Reference

Component Connector End Views

Description and Operation

Object Detection Description and Operation : UVC → UD5

Electrical Information Reference

- Circuit Testing
- Connector Repairs
- Testing for Intermittent Conditions and Poor Connections
- Wiring Repairs

Scan Tool Reference

Control Module References for scan tool information

Circuit/System Verification

1. Verify that DTC B1405 is not present.
   If DTC is present, refer to DTC B1405 .
2. Verify that DTC B0958 01, B0959 01, B0960 01 or B0961 01 is not present.
   If DTC is present, check the appropriate sensor for contamination with mud, ice or snow. If no contamination is diagnosed, refer to Circuit/System Testing.
3. Verify that DTC B0958 21, B0959 21, B0960 21 or B0961 21 is not present.
   If DTC is present, check the appropriate sensor for contamination with mud, ice or snow. If no contamination is diagnosed, replace the sensor.
4. Verify that DTC B0958 3A, B0959 3A, B0960 3A or B0961 3A is not present.
   If DTC is present, replace the appropriate sensor with a sensor of correct sensor type.
5. Vehicle in Service Mode, transmission in REVERSE, verify the scan tool Parking Assist System Status parameter displays Enabled.

Circuit/System Testing

1. Vehicle OFF for 30 s, disconnect the harness connector at the appropriate rear object sensor.
2. Test for less than 30 Ω between the low reference circuit terminal 2 and ground.

If greater than the specified range, test the low reference circuit for an open/high resistance. If the circuit tests normal, replace the K41 Front and Rear Parking Assist Control Module.

3. Vehicle in Service Mode, transmission in REVERSE, test for 7.5-9.0 V between the 8 V reference circuit terminal 1 and ground.
   If less than the specified range, test the 8 V reference circuit for an open/high resistance. If the circuit tests normal, replace the K41 Front and Rear Parking Assist Control Module.
4. Vehicle OFF, remove the malfunctioning object sensor and swap locations with another properly functioning rear object sensor. Connect the harness connector at both sensors.
5. Vehicle in Service Mode, verify the DTC is set for the new location in which the malfunctioning sensor is installed.
   If the DTC does not set for the new location, test the signal circuit terminal 3 for a short to voltage, short to ground, or an open/high resistance. If the circuit tests normal, replace the K41 Front and Rear Parking Assist Control Module.
6. If the DTC sets for the new location in which the malfunctioning sensor is installed, replace the appropriate rear object sensor.

Repair Instructions

Perform the Diagnostic Repair Verification after completing the diagnostic procedure.

- Rear Parking Assist Alarm Sensor Replacement
- Control Module References for parking assist control module replacement, programming and set-up

&#169© Copyright Chevrolet. All rights reserved

DTC B0967 or B0968

Diagnostic Instructions

- Perform the Diagnostic System Check - Vehicle prior to using this diagnostic procedure.
- Review Strategy Based Diagnosis for an overview of the diagnostic approach.
- Diagnostic Procedure Instructions provides an overview of each diagnostic category.

DTC Descriptors

DTC B0967 02: Parking Assist On/Off Switch Circuit Short to Ground

DTC B0968 01: Parking Assist On/Off Switch Indicator Circuit Short to Battery

DTC B0968 06: Parking Assist On/Off Switch Indicator Circuit Low Voltage/Open

Diagnostic Fault Information

Circuit	Short to Ground	Open/High Resistance	Short to Voltage	Signal Performance
Parking Assist Switch Indicator Ignition	B0968 06	B0968 06	--	--
Parking Assist Switch Signal	B0967 02	1	--	--
Parking Assist Switch Indicator Control	B0968 06	B0968 06	B0968 01	-
Parking Assist Switch Ground	--	1	--	--
1. Parking Assist Switch Malfunction				

Circuit/System Description

The parking assist can be activated/deactivated by pressing the parking assist switch. By engaging the reverse gear the parking assist can also be activated. By subsequently pressing the parking assist switch the parking assist can be disabled again.

The indicator in the parking assist switch shows the status of the parking assist. If the lamp is ON, the parking assist is activated.

Conditions for Running the DTC

- Vehicle in Service Mode or ON.
- The parking assist is activated. The activation takes place by putting in the reverse gear or by pressing the parking assist switch.

Conditions for Setting the DTC

B0967 02

The parking assist control module has detected a short to ground.

B0968 01

The parking assist control module has detected a short to battery.

B0968 06

The parking assist control module has detected a short to ground or open.

Action Taken When the DTC Sets

- The parking assist is disabled.
- The driver information centre displays SERVICE PARK ASSIST.

Conditions for Clearing the DTC

The condition for setting the DTC is no longer present.

Reference Information

Schematic Reference

Object Detection Schematics

Connector End View Reference

Component Connector End Views

Description and Operation

Electrical Information Reference

- Circuit Testing
- Connector Repairs
- Testing for Intermittent Conditions and Poor Connections
- Wiring Repairs

Scan Tool Reference

Control Module References for scan tool information

Circuit/System Verification

1. Verify that DTC B0967 02 is not present.
   If DTC is present, refer to Parking Assist Switch Circuit Malfunction.
2. Verify that B0968 01 or B0968 06 is not present.
   If DTC is present, refer to Parking Assist Switch Indicator Circuit Malfunction.
3. Activate and deactivate the parking assist switch and verify the scan tool Park Assist Switch parameter changes between Active and Inactive.

Circuit/System Testing

Parking Assist Switch Circuit Malfunction

1. Vehicle OFF, disconnect the harness connector at the S48B Multifunction Switch - Overhead Console.
2. Test for less than 10 Ω between the ground circuit terminal 2 and ground.
   If greater than the specified value, test the ground circuit for an open/high resistance.
3. Connect the harness connector at the S48B Multifunction Switch - Overhead Console.
4. Disconnect the X1 harness connector at the K41 Front and Rear Parking Assist Control Module.
5. Vehicle in Service Mode, test for less than 0.3 V between the signal circuit terminal 8 X1 and ground.
   If greater than the specified value, test the signal circuit for a short to voltage.
6. Vehicle in Service Mode, verify that a test lamp does not illuminate between the B+ circuit terminal 1 X1 and signal circuit terminal 8 X1.
   If the test lamp illuminates, test signal circuit for a short to ground. If the circuit tests normal, replace the S48B Multifunction Switch - Overhead Console.
7. Verify that the test lamp illuminates between the B+ circuit terminal 1 X1 and signal circuit terminal 8 X1 while pressing the parking assist switch.
   If the test lamp does not illuminate, test the signal circuit for an open/high resistance. If all circuits test normal, replace the S48B Multifunction Switch - Overhead Console.
8. If all circuits test normal, replace the K41 Front and Rear Parking Assist Control Module.

Parking Assist Switch Indicator Circuit Malfunction

1. Vehicle OFF, disconnect the harness connector at the S48B Multifunction Switch - Overhead Console.
2. Vehicle in Service Mode, test for B+ between the ignition circuit terminal 3 and ground.
   If less than the specified value, test the ignition circuit for a short to ground or an open/high resistance.
3. Command the Park Assist Switch LED output control ON with the scan tool. Test for B+ between the ignition circuit terminal 3 and the signal circuit terminal 6.
   If less than the specified value, test the signal circuit for an open/high resistance. If all circuits test normal, replace the K41 Front and Rear Parking Assist Control Module.
4. Command the Park Assist Switch LED output control OFF with the scan tool. Test for less than 0.3 V between the ignition circuit terminal 3 and the signal circuit terminal 6.
   If greater than the specified value, test the signal circuit for a short to ground. If all circuits test normal, replace the K41 Front and Rear Parking Assist Control Module.
5. If all circuits test normal, replace the S48B Multifunction Switch - Overhead Console.

Repair Instructions

Perform the Diagnostic Repair Verification after completing the repair.

- Accessory Switch Replacement
- Control Module References for parking assist control module replacement, programming and set-up

&#169© Copyright Chevrolet. All rights reserved

DTC B1015

Diagnostic Instructions

- Perform the Diagnostic System Check - Vehicle prior to using this diagnostic procedure.
- Review Strategy Based Diagnosis for an overview of the diagnostic approach.
- Diagnostic Procedure Instructions provides an overview of each diagnostic category.

DTC Descriptor

DTC B1015 00: Vehicle Identification Number Information Malfunction

Circuit/System Description

When the vehicle is turned ON, the parking assist control module receives the vehicle identification number (VIN) from the body control module. The parking assist control module will compare the VIN received to the VIN stored in memory.

Conditions for Running the DTC

Ignition voltage is between 9-16 V.

Conditions for Setting the DTC

The VIN stored in the parking assist control module does not match the received VIN.

Action Taken When the DTC Sets

- The parking assist is disabled.
- The driver information centre displays SERVICE PARK ASSIST.

Conditions for Clearing the DTC

The VIN stored in the parking assist control module matches the VIN stored in the body control module.

Reference Information

Schematic Reference

Object Detection Schematics

Connector End View Reference

Component Connector End Views

Description and Operation

Object Detection Description and Operation : UVC → UD5

Electrical Information Reference

- Circuit Testing
- Connector Repairs
- Testing for Intermittent Conditions and Poor Connections
- Wiring Repairs

Scan Tool Reference

Control Module References for scan tool information

Circuit/System Verification

Vehicle in Service Mode, program the K41 Front and Rear Parking Assist Control Module and verify the DTC does not reset.

If the DTC is reset, replace the K41 Front and Rear Parking Assist Control Module.

Repair Instructions

Perform the Diagnostic Repair Verification after completing the repair.

Control Module References for parking assist control module replacement, programming and set-up

&#169© Copyright Chevrolet. All rights reserved

DTC B1405

Diagnostic Instructions

- Perform the Diagnostic System Check - Vehicle prior to using this diagnostic procedure.
- Review Strategy Based Diagnosis for an overview of the diagnostic approach.
- Diagnostic Procedure Instructions provides an overview of each diagnostic category.

DTC Descriptors

DTC B1405 02: Control Module Voltage Reference Output 2 Circuit Short to Ground

DTC B1405 03: Control Module Voltage Reference Output 2 Circuit Low Voltage

DTC B1405 07: Control Module Voltage Reference Output 2 Circuit High Voltage

Diagnostic Fault Information

Circuit	Short to Ground	Open/High Resistance	Short to Voltage	Signal Performance
8V Reference	B1405 02	B0954 06, B0955 06, B0956 06, B0957 06, B0958 06, B0959 06, B0960 06, B0961 06, B1405 03	B0954 06, B0955 06, B0956 06, B0957 06, B0958 06, B0959 06, B0960 06, B0961 06, B1405 07	-
Left Front Object Sensor Signal	B0954 06	B0954 06	B0954 01	B0954 08, B0954 21
Left Middle Front Object Sensor Signal	B0955 06	B0955 06	B0955 01	B0955 08, B0955 21
Right Middle Front Object Sensor Signal	B0956 06	B0956 06	B0956 01	B0956 08, B0956 21
Right Front Object Sensor Signal	B0957 06	B0957 06	B0957 01	B0957 08, B0957 21
Left Rear Object Sensor Signal	B0958 06	B0958 06	B0958 01	B0958 08, B0959 21

Left Middle Rear Object Sensor Signal	B0959 06	B0959 06	B0959 01	B0959 08, B0959 21
Right Middle Rear Object Sensor Signal	B0960 06	B0960 06	B0960 01	B0960 08, B0958 21
Right Rear Object Sensor Signal	B0961 06	B0961 06	B0961 01	B0961 08, B0961 21
Low Reference	--	B0954 06, B0955 06, B0956 06, B0957 06, B0958 06, B0959 06, B0960 06, B0961 06	--	--

Circuit/System Description

The object sensors are 3 wire sensors that are used to determine the distance between the vehicle and an object of interest. The parking assist control module supplies 8 V to the object sensors via the 8 V reference circuit and provides ground via the low reference circuit. The parking assist control module triggers the sensors in a sequential loop. After each sensor transmits, the parking assist control module uses the sensor echo received through the signal circuit to calculate the distance and position of an object.

Conditions for Running the DTC

- Vehicle in Service Mode or ON
- The parking assist is activated. The activation takes place through putting in the reverse gear or through operating the parking assist switch.

Conditions for Setting the DTC

B1405 02

The parking assist control module has detected the 8 V reference circuit is shorted to ground.

B1405 03

The parking assist control module has detected the 8 V reference circuit is less than 6.3 V.

B1405 07

The parking assist control module has detected the 8 V reference circuit is greater than 10.4 V.

Action Taken When the DTC Sets

- The parking assist is disabled.
- The driver information centre displays SERVICE PARK ASSIST.

Conditions for Clearing the DTC

The condition for setting the DTC is no longer present.

Reference Information

Schematic Reference

Object Detection Schematics

Connector End View Reference

Component Connector End Views

Description and Operation

Object Detection Description and Operation : UVC → UD5

Electrical Information Reference

- Circuit Testing
- Connector Repairs
- Testing for Intermittent Conditions and Poor Connections
- Wiring Repairs

Scan Tool Reference

Control Module References for scan tool information

Circuit/System Verification

Vehicle in Service Mode, activate the parking assist, observe the scan tool Park Assist Sensor Reference Voltage parameter. The reading should be between 6.3-10.4 V.

Circuit/System Testing

1. Vehicle OFF, disconnect the harness connector at each of the object sensors.
2. Start at the B78G Rear Object Sensor - Left Outer, Vehicle in Service Mode, activate the park assist, test for 6.3-10.4 V between the 8 V reference circuit terminal 1 at the object sensor harness connector and ground.
   If less than the specified range, test the 8 V reference circuit for a short to ground. If the circuit tests normal, replace the K41 Front and Rear Parking Assist Control

Module.

If greater than the specified range, test the 8 V reference circuit for a short to voltage. If the circuit tests normal, replace the K41 Front and Rear Parking Assist Control Module.

3. Install each object alarm sensor harness connector one at a time, checking DTCs after each sensor is connected. Verify DTC B1405 is not set as current.
   If the DTC is set, replace the object alarm sensor that was connected immediately before the DTC set.

   Note: Make sure to check front object sensors.

4. If all circuits test normal, replace the K41 Front and Rear Parking Assist Control Module.

Repair Instructions

Perform the Diagnostic Repair Verification after completing the diagnostic procedure.

- Front Parking Assist Alarm Sensor Replacement
- Rear Parking Assist Alarm Sensor Replacement
- Control Module References for parking assist control module replacement, programming and set-up

&#169© Copyright Chevrolet. All rights reserved

Symptoms - Object Detection

Note: The following steps must be completed before using the symptom tables:

1. Perform the Diagnostic System Check - Vehicle before using the Symptom Tables in order to verify that all of the following are true:
   - There are no DTCs set.
   - The control modules can communicate via the serial data link.
2. Review the system operation in order to familiarize yourself with the system functions. Refer to Object Detection Description and Operation : UVC → UD5 .

Visual/Physical Inspection

- Inspect for aftermarket devices which may affect the operation of the system. Refer to Checking Aftermarket Accessories .
- Inspect the easily accessible or visible system components for obvious damage or conditions which may cause the symptom.
- Make sure the parking assist sensors located on the rear bumper are clear. Remove any snow, mud or ice that is blocking the sensors.
- Make sure the rear vision camera is clear. Remove any snow, mud or ice that is blocking the rear vision camera.

Intermittent

Faulty electrical connections or wiring may be the cause of intermittent conditions. Refer to Testing for Intermittent Conditions and Poor Connections .

Symptom List

- Parking Assist System Malfunction
- Rear Vision Camera System Malfunction

&#169© Copyright Chevrolet. All rights reserved

Parking Assist System Malfunction

Diagnostic Instructions

- Perform the Diagnostic System Check - Vehicle prior to using this diagnostic procedure.
- Review Strategy Based Diagnosis for an overview of the diagnostic approach.
- Diagnostic Procedure Instructions provides an overview of each diagnostic category.

Diagnostic Fault Information

Circuit	Short to Ground	Open/High Resistance	Short to Voltage	Signal Performance
Parking Assist Switch Indicator Ignition	B0968 06	B0968 06	--	--
Parking Assist Switch Signal	B0967 02	1	--	--
Parking Assist Switch Indicator Control	B0968 06	B0968 06	B0968 01	-
Parking Assist Switch Ground	--	1	--	--
1. Parking Assist Switch Malfunction				

Circuit/System Description

The ultrasonic parking assist system is designed to identify and notify the driver of an object in the vehicle's path when moving forward or reversing at speeds of less than 8 km/h (5 MPH). The distance and location of the object is determined by eight object sensors: four located in the rear bumper and four located in the front bumper. The parking assist system will notify the driver using an audible signal through the radio.

Diagnostic Aids

When the "Park Assist Off", "Park Assist Blocked See Owners Manual", or "Park Assist Blocked See Owners Manual" message is displayed in the Driver Information Centre the disable reason is stored in the Park Assist Disable History.

The scan tool Park Assist Disable History parameters are a list of the seven previous reasons the parking assist system was disabled. These parameters may help in the diagnosis of an intermittent concern or a customer concern which is the result of normal system operation. The following is a brief description of potential causes which may aid in diagnosis:

- Manual Disable - The parking assist system has been disabled through the parking assist switch or audio system personalization menu.

- Hitch/Object Attached - The parking assist control module is detecting an object that is attached to the vehicle. Common items such as a hitch receiver, trailer, or a bicycle rack may cause this concern. Additionally, damage to the rear of the vehicle or a misaligned sensor may cause this concern. If the vehicle is damaged in a manner that causes the sensor to detect the bumper itself, the parking assist control module will interpret this as an attached object and disable the system. Carefully inspect the bumper, bumper mounting surface, and sensor retainers before continuing with normal diagnosis. After the detected cause has been addressed the vehicle must be driven at speed greater than 40 km/h (25 MPH).
- Reverse Overspeed - The vehicle is travelling too fast in reverse at speeds of greater than 8 km/h (5 MPH).
- Inhibit - The parking assist control module has lost or received invalid GMLAN signal(s).
- Sensor Disturbance - An outside interference is causing sensor movement. Such interference may be caused a heavy pounding, like that of a nearby jackhammer, or large changes in pressure, such as a large truck's air brakes.
- Sensor Ring Time - If the sensor fails its own diagnostic initialization the parking assist control module will set this error. After the detected cause has been addressed the vehicle must be driven at speed greater than 40 km/h (25 MPH). The following is a list of reasons this cause may have set:
  - One or more of the sensors may be blocked by snow, mud, ice, or other debris. This might happen after going through a car wash in cold weather.
  - Silicone insulator surrounding sensor maybe missing, cut, or twisted.
  - Improperly installed sensor, sensor maybe be crooked due to a tight wire harness.
  - One or more of the sensors may be scratched or the paint maybe chipped.
  - Excessive paint thickness on a sensor may cause an excessive sensor ring time. When replacing or refinishing a sensor, do not apply an excessive amount of paint or clear coat.

Reference Information

Schematic Reference

Object Detection Schematics

Connector End View Reference

Component Connector End Views

Description and Operation

Object Detection Description and Operation : UVC → UD5

Electrical Information Reference

- Circuit Testing
- Connector Repairs
- Testing for Intermittent Conditions and Poor Connections

- Wiring Repairs

Scan Tool Reference

Control Module References for scan tool information

Circuit/System Verification

1. Vehicle in Service Mode, verify the park assist system is enabled through the parking assist switch or audio system personalisation menu.
   If the park assist system is manually disabled, enable the system. Refer to the vehicle owners manual for instructions on enabling the system.
2. Observe the scan tool Park Assist Switch parameter while pressing and releasing the parking assist switch. The parameter should change between Active and Inactive.
   If the parameter does not change between the specified values, refer to Parking Assist Switch Circuit Malfunction.
3. Command the Park Assist Switch LED ON and OFF with the scan tool. The parking assist switch indicator should turn ON and OFF when changing between the commanded states.
   If the indicator does not turn ON and OFF, refer to Parking Assist Switch Indicator Circuit Malfunction.

   Note: After completing the next step the vehicle might need to be driven in the forward direction at speed greater than 40 km/h (25 MPH).

4. Transmission in Reverse, verify that one audible beep sounds and the scan tool Park Assist System Status parameter is Enable.
   If not the specified values, refer to Diagnostic Aids and the scan tool Park Assist Disable History parameters to determine the cause of the inhibit.

Circuit/System Testing

Parking Assist Switch Circuit Malfunction

1. Vehicle OFF, disconnect the harness connector at the S48B Multifunction Switch - Overhead Console.
2. Test for less than 10 Ω between the ground circuit terminal 2 and ground.
   If greater than the specified value, test the ground circuit for an open/high resistance.
3. Connect the harness connector at the S48B Multifunction Switch - Overhead Console.
4. Disconnect the X1 harness connector at the K41 Front and Rear Parking Assist Control Module.
5. Vehicle in Service Mode, test for less than 0.3 V between the signal circuit terminal 8 X1 and ground.
   If greater than the specified value, test the signal circuit for a short to voltage.
6. Vehicle in Service Mode, verify that a test lamp does not illuminate between the B+ circuit terminal 1 X1 and signal circuit terminal 8 X1.
   If the test lamp illuminates, test signal circuit for a short to ground. If the circuit tests normal, replace the S48B Multifunction Switch - Overhead Console.
7. Verify that the test lamp illuminates between the B+ circuit terminal 1 X1 and signal circuit terminal 8 X1 while pressing the parking assist switch.
   If the test lamp does not illuminate, test the signal circuit for an open/high resistance. If all circuits test normal, replace the S48B Multifunction Switch - Overhead Console.
8. If all circuits test normal, replace the K41 Front and Rear Parking Assist Control Module.

Parking Assist Switch Indicator Circuit Malfunction

1. Vehicle OFF, disconnect the harness connector at the S48B Multifunction Switch - Overhead Console.
2. Vehicle in Service Mode, test for B+ between the ignition circuit terminal 3 and ground.
   If less than the specified value, test the ignition circuit for a short to ground or an open/high resistance.
3. Command the Park Assist Switch LED output control ON with the scan tool. Test for B+ between the ignition circuit terminal 3 and the signal circuit terminal 6.
   If less than the specified value, test the signal circuit for an open/high resistance. If all circuits test normal, replace the K41 Front and Rear Parking Assist Control Module.
4. Command the Park Assist Switch LED output control OFF with the scan tool. Test for less than 0.3 V between the ignition circuit terminal 3 and the signal circuit terminal 6.
   If greater than the specified value, test the signal circuit for a short to ground. If all circuits test normal, replace the K41 Front and Rear Parking Assist Control Module.
5. If all circuits test normal, replace the S48B Multifunction Switch - Overhead Console.

Repair Instructions

Perform the Diagnostic Repair Verification after completing the diagnostic procedure.

- Accessory Switch Replacement
- Control Module References for parking assist control module replacement, programming and set-up

&#169© Copyright Chevrolet. All rights reserved

Rear Vision Camera System Malfunction

Diagnostic Instructions

- Perform the Diagnostic System Check - Vehicle prior to using this diagnostic procedure.
- Review Strategy Based Diagnosis for an overview of the diagnostic approach.
- Diagnostic Procedure Instructions provides an overview of each diagnostic category.

Circuit/System Description

When the transmission is placed into REVERSE, a 12 V signal is sent to the rearview camera indicating that camera operation is requested. Ignition voltage and ground are supplied to the rearview camera. The rearview camera sends video information to the radio through a video signal + and a video signal - circuit. A grounded shielding also wraps the video signal circuits to reduce electronic interference which may degrade the video signal and cause a distorted or otherwise degraded image.

Diagnostic Aids

A poor video image can be caused by ice, snow, and mud buildup on the lens of the rearview camera. Also, extreme lighting conditions can affect performance, such as operating in the dark or with bright sunlight shining on the camera. Extreme high or low temperatures can also affect the image quality. An open in the shield of the video signal circuit can also cause a distorted screen.

Reference Information

Schematic Reference

Object Detection Schematics

Connector End View Reference

Component Connector End Views

Description and Operation

Object Detection Description and Operation : UVC → UD5

Electrical Information Reference

- Circuit Testing
- Connector Repairs
- Testing for Intermittent Conditions and Poor Connections
- Wiring Repairs

Scan Tool Reference

Control Module References for scan tool information

Circuit/System Verification

1. Verify that DTC B2545 is not present.
   If DTC is present, refer to DTC B2545 .
2. Inspect the rearview camera and verify there is no debris on the lens and that the bezel or bezel seal is not damaged.
   If debris is found on the lens, clean the lens. If the lens, bezel, or bezel seal are damaged, replace as necessary.
3. Vehicle ON and in PARK, verify the reversing lamps are off.
   If the reversing lamps are illuminated, refer to Reverse Lamps Malfunction .
4. Vehicle ON, transmission in REVERSE, verify the reversing lamps are on.
   If the reversing lamps are not illuminated, refer to Reverse Lamps Malfunction .
5. Vehicle ON, transmission in REVERSE, verify a clear rear vision image is displayed on the radio.
   If a clear image is not displayed, refer to Circuit/System Testing.

Circuit/System Testing

Note: Circuit/System Verification must be performed before Circuit/System Testing.

1. Vehicle OFF, disconnect the harness connector at the rearview camera.
2. Test for less than 5 Ω between the ground circuit terminal 5 and ground.
   If greater than the specified value, test the ground circuit for an open/high resistance.
3. Vehicle in Service Mode, verify a test lamp illuminates between the ignition circuit terminal 6 and ground.
   If the test lamp does not illuminate, test the ignition circuit for a short to ground or an open/high resistance.
4. Vehicle ON, park brake applied, transmission in REVERSE, test for greater than 11 V between the control circuit terminal 3 and ground.
   If less than the specified value, test the control circuit for a short to ground or an open/high resistance. If the circuit tests normal, replace the K9 Body Control Module.
5. Vehicle OFF, disconnect the X4 harness connector at the A11 Radio.
6. Vehicle in Service Mode, test for less than 0.3 V between the following signal circuit terminals at the rearview camera harness connector and ground:
   - Signal (+) circuit terminal 1

- Signal (-) circuit terminal 4

  If greater than the specified value, test the signal circuit for a short to voltage.

7. Test for infinite resistance between the following circuit terminals at the rearview camera harness connector and ground:
   - Signal (+) circuit terminal 1
   - Signal (-) circuit terminal 4

   If not the specified value, test the circuit for a short to ground.
8. Test for less than 5 Ω between the signal (+) circuit terminal 1 at the rearview camera harness connector and the signal (+) circuit terminal 5 X4 at the A11 Radio harness connector.
   If greater than the specified value, test the signal circuit for an open/high resistance.
9. Test for less than 5 Ω between the signal (-) circuit terminal 4 at the rearview camera harness connector and the signal (-) circuit terminal 15 X4 at the A11 Radio harness connector.
   If greater than the specified value, test the signal circuit for an open/high resistance.
10. If all circuits test normal, replace the rearview camera.
11. Vehicle ON, transmission in REVERSE, verify a clear rear vision image is displayed on the radio.
    If a clear rear vision image is not displayed, replace the A11 Radio.

Repair Instructions

Perform the Diagnostic Repair Verification after completing the diagnostic procedure.

- Rearview Camera Image Display Module Replacement : Volt
- Control Module References for body control module or radio replacement, programming and setup

&#169© Copyright Chevrolet. All rights reserved

Front and Rear Object Alarm Module Replacement

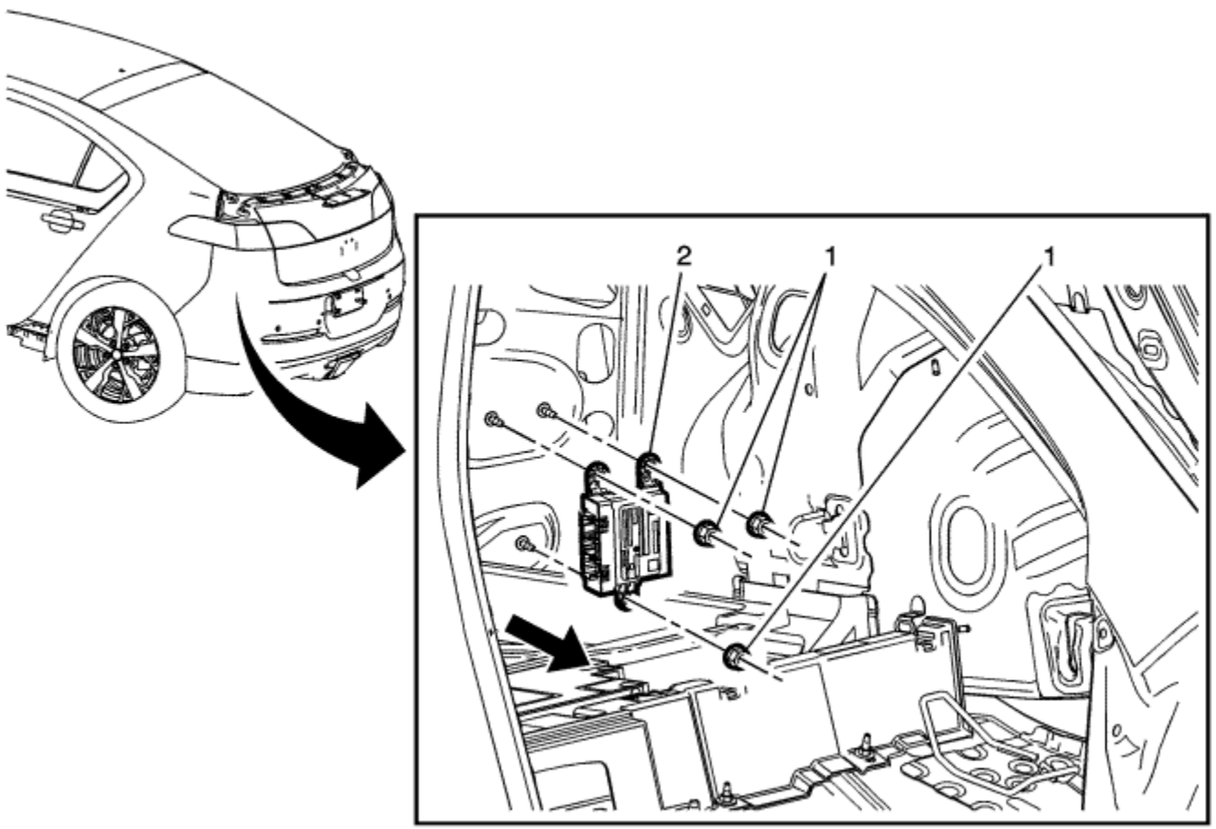

Callout	Component Name
Preliminary Procedure 1. Disconnect the battery negative cable. Refer to Battery Negative Cable Disconnection and Connection . 2. Remove the left quarter inner trim finish panel. Refer to Quarter Inner Trim Finish Panel Replacement .	

1	Front And Rear Object Alarm Module Nuts (Qty: 3) **Caution:** Refer to Fastener Caution in the Preface section. **Tighten** 5 N·m(44 lb in)
2	Front And Rear Object Alarm Module **Procedure** 1. Disconnect the electrical connectors. 2. For programming and set up, refer to Control Module References .

© Copyright Chevrolet. All rights reserved

Front Parking Assist Alarm Sensor Replacement

Removal Procedure

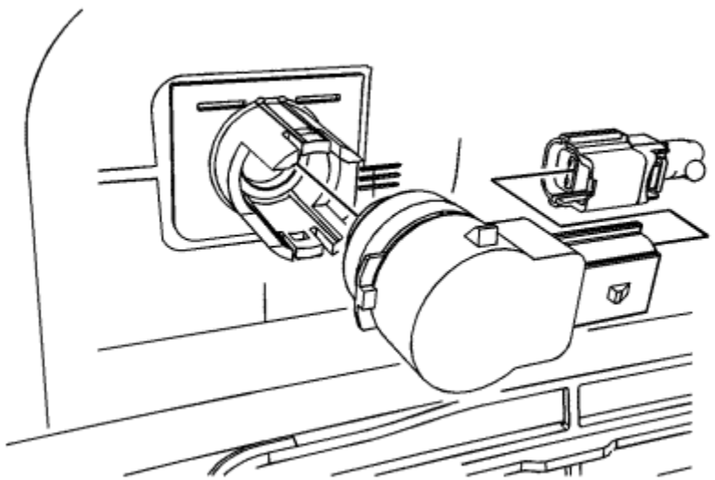

1. Remove front bumper fascia. Refer to Front Bumper Fascia Removal and Installation : Volt → Ampera .
2. Disconnect electrical from the front object alarm sensor.
3. Lift the locking tabs on the housing and remove the front object alarm sensor.

Installation Procedure

Note: Do not refinish previously painted sensors. Excess paint build up will cause the sensor to be inoperative.

1. Paint the front object alarm sensor. Refer to Basecoat/Clearcoat Paint Systems .
2. Ensure the paint does not exceed 6 mils. Use a paint thickness gauge suitable for non-ferrous metals. Refer to Paint Gauges .

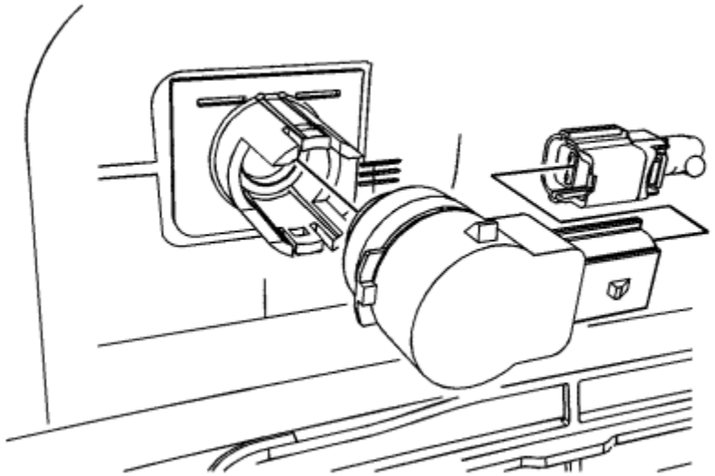

3. Insert the sensor into the housing.
4. Connect the electrical connector to the front object alarm sensor.
5. Install the front bumper fascia. Refer to Front Bumper Fascia Removal and Installation : Volt → Ampera .

© Copyright Chevrolet. All rights reserved

Rear Parking Assist Alarm Sensor Replacement

Removal Procedure

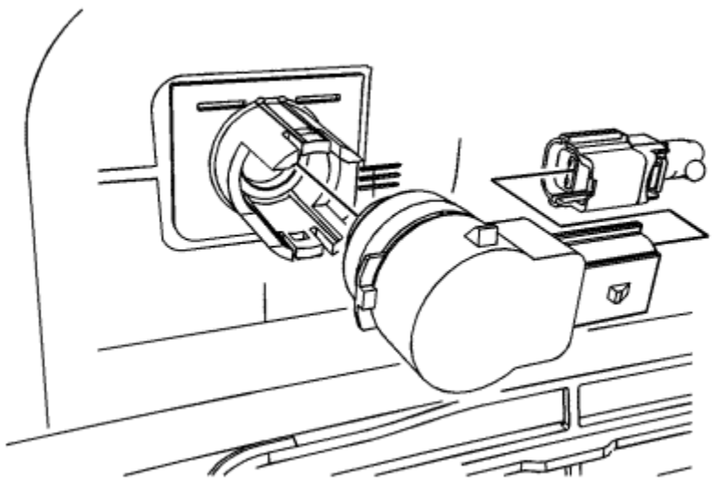

1. Remove rear bumper fascia. Refer to Rear Bumper Fascia Removal and Installation : Volt → Ampera .
2. Disconnect electrical from the rear object sensor.
3. Lift the locking tabs on the housing and remove the rear object sensor.

Installation Procedure

Note: Do not refinish previously painted sensors. Excess paint build up will cause the sensor to be inoperative.

1. Paint the rear object sensor. Refer to Basecoat/Clearcoat Paint Systems .
2. Ensure the paint does not exceed 6 mils. Use a paint thickness gauge suitable for non-ferrous metals. Refer to Paint Gauges .

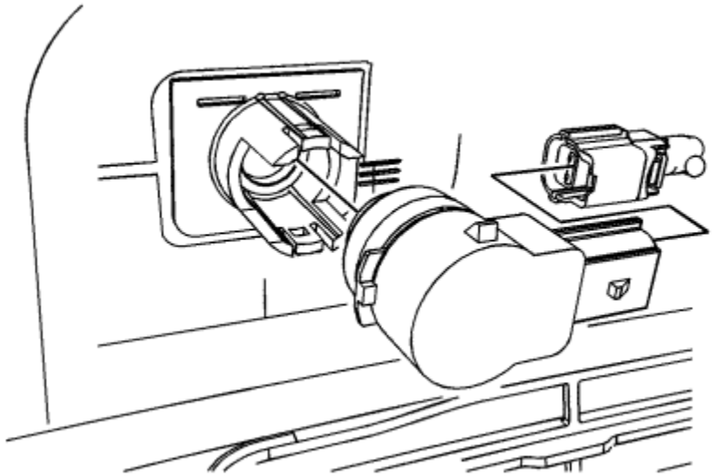

3. Insert the sensor into the housing.
4. Connect the electrical connector to the rear object sensor.
5. Install the rear bumper fascia. Refer to Rear Bumper Fascia Removal and Installation : Volt → Ampera .

© Copyright Chevrolet. All rights reserved

Rearview Camera Image Display Module Replacement - Volt

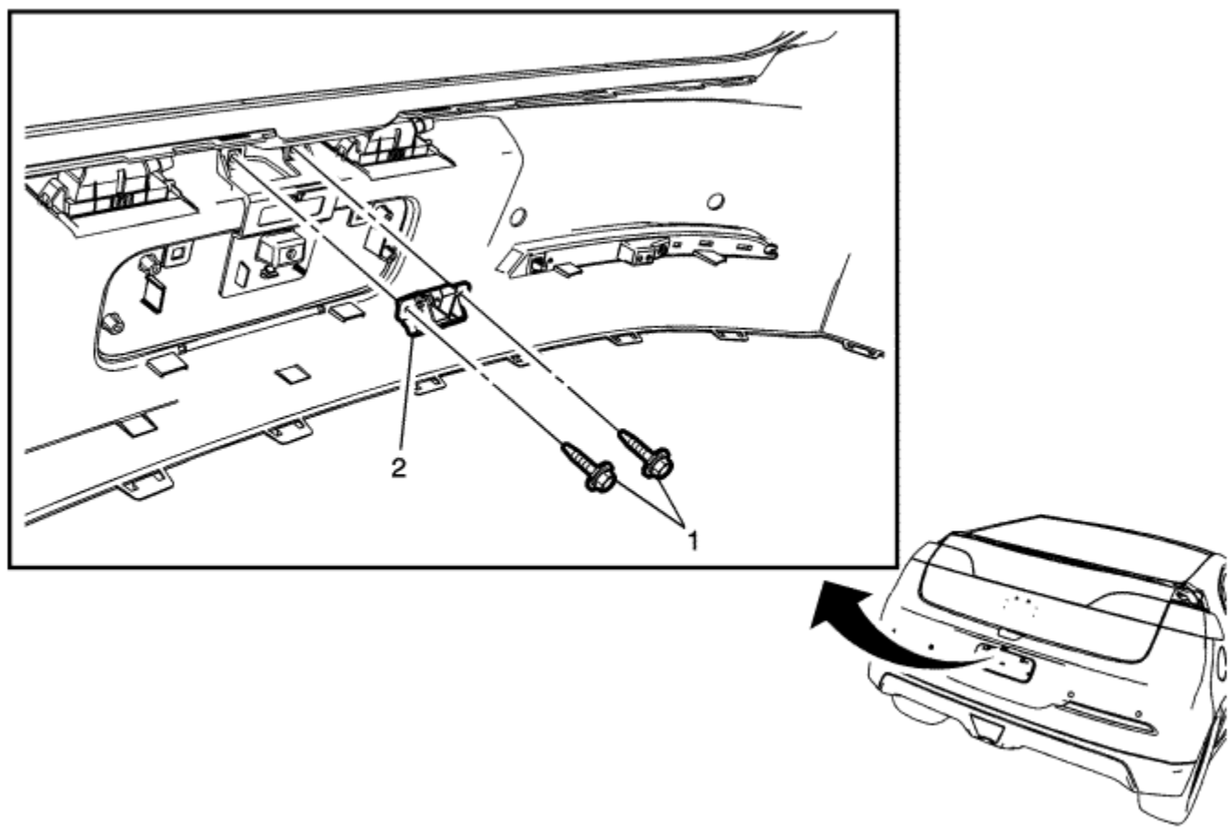

Callout	Component Name
Preliminary Procedure Remove the rear bumper fascia. Refer to Rear Bumper Fascia Removal and Installation : Volt → Ampera .	
1	Rearview Camera Image Display Module Screw (Qty: 2)

	Caution: Refer to Fastener Caution in the Preface section.
2	Rearview Camera Image Display Module **Procedure** Disconnect the electrical connector.

© Copyright Chevrolet. All rights reserved

Object Detection Description and Operation - UD5

The ultrasonic parking assist system is designed to identify and notify the driver of an object in the vehicle path when moving forward or reversing at speeds of less than 8 km/h (5 MPH). The distance and location of the object is determined by 8 object sensors: 4 located in the rear bumper and 4 located in the front bumper. The parking assist system will notify the driver using an audible beep signal through the radio.

The parking assist system is made up of the following components:

- Parking assist control module
- Front object alarm sensors
- Rear object alarm sensors
- Parking assist switch
- Parking assist switch indicator

Parking Assist Control Module

The parking assist control module provides an 8 V reference and a low reference to the 8 object alarm sensors. The parking assist control module receives individual signals from each of the 8 sensors and determines the location and distance of an object based on these inputs. When an object is detected, the parking assist control module will send a data message via CAN-Bus to the radio requesting an audible alert.

Object Alarm Sensors

The object alarm sensors are located in the front and rear bumpers of the vehicle. The sensors are used to determine the distance between an object and the bumper. Each sensor emits an ultrasonic frequency which is reflected off any object located in front of or behind the vehicle. These reflections are received by the sensors. The time difference between the emission of the frequency and when the reflection is received is known as sensor echo time, it is used to determine the distance to the object. The sensors report this information to the parking assist control module.

Parking Assist Switch

The parking assist can be activated and deactivated by pressing the parking assist switch. By engaging the reverse gear the parking assist can also be activated. By subsequently pressing the parking assist switch the parking assist can be disabled again.

Parking Assist Switch Indicator

The indicator in the parking assist switch shows the status of the parking assist. If the lamp is ON, the parking assist is activated.

Parking Assist Operation

When an object is within the measuring range of the sensor, the ultrasonic pulse is reflected and is received by the sending or a neighbouring sensor. The sensor converts this signal into a voltage signal and sends this signal to the parking assist control module. The parking assist control module evaluates the sensor signals received. As soon as an object is within the measuring range, the parking assist control module sends a message via CAN-Bus to the radio in order to give out the acoustic distance signal.

The parking assist system can detect objects greater than 7.6 cm (3 in) wide and 25.4 cm (10 in) tall. The system cannot detect objects below the bumper, underneath the vehicle. If an object is detected, one of the following will occur:

- The measuring range of the front object alarm sensors is between 30-120 cm (11.8-47.2 in). From a distance of 120 cm (47.2 in), the acoustic signal is active. The frequency of the beep sound increases with decreasing distance. From a distance less than 30 cm (11.8 in), the sound becomes continuous.
- The measuring range of the rear object alarm sensors is between 30-250 cm (11.8-98.4 in). From a distance of 250 cm (98.4 in), the acoustic signal is active. The frequency of the beep sound increases with decreasing distance. From a distance less than 30 cm (11.8 in), the sound becomes continuous.

The parking assist can be activated and deactivated by pressing the parking assist switch. When REVERSE gear is selected, park assist is engaged automatically for both front and rear sensors. When the vehicle is put into DRIVE from REVERSE the front assist sensors will be active up to speeds of 8 km/h (5 MPH) to assist with parking manoeuvres. Once the vehicle is above 8 km/h (5 MPH) the front sensors are disabled and will not be enabled until either REVERSE gear is selected or the parking assist switch is pressed to activate the system. Once the parking assist switch is pressed during a key cycle the front sensors become active at speeds under 8 km/h (5 MPH). If the park assist switch is pressed again in the same key cycle the message "Park Assist Off" will be displayed in the driver information centre if the vehicle speed is under 8 km/h (5 MPH) and front sensors detect an object within 120 cm (47.2 in). The LED indicator on the parking assist switch provides the ON/OFF state of the system. If the indicator is ON, the system is active and ready to assist.

The parking assist control module carries out a self test and monitors the sensors for electrical and mechanical faults. Monitored is the power supply of each sensor and the sensor signals, which need to alter when the vehicle moves. If this is not the case, the sensor is acoustically blocked or faulty. Mud, ice and snow may cause obstruction of the function of the sensors. Besides that the parking assist control module checks whether the correct type of sensor is installed. If any of these tests fails, a DTC with corresponding symptom is set, the parking assist is deactivated and the parking assist indicator in the instrument panel cluster is activated.

Parking Assist System Driver Information Centre Messages

SERVICE PARK ASSIST

The driver information centre displays SERVICE PARK ASSIST when the parking assist control module detects a malfunction in the parking assist system and the system is disabled. The driver information centre also displays SERVICE PARK ASSIST when a loss of communication occurs with the parking assist control module.

PARK ASSIST OFF

The PARK ASSIST OFF message is displayed in the driver information centre when the parking assist system is disabled due to conditions that disable or inhibit the system. The parking assist control module requests the driver information centre display PARK ASSIST OFF when it detects one of the following conditions:

- The parking assist system is manually disabled using the parking assist switch.
- An object is attached to the rear of the vehicle, such as a trailer, bicycle rack, trailer hitch receiver, or tow bar. Also, an object extending beyond a lowered endgate will disable the system.
- The parking assist sensors are covered by snow, mud, dirt, slush, or ice.
- The vehicle bumper is damaged.
- Excessive paint thickness on a replacement parking assist sensor.
- The parking assist sensors are disrupted by vibrations, like those caused by a large nearby vehicle or from heavy equipment such as a jackhammer.

© Copyright Chevrolet. All rights reserved

Object Detection Description and Operation - UVC

The ultrasonic parking assist system is designed to identify and notify the driver of an object in the vehicle path when moving forward or reversing at speeds of less than 8 km/h (5 MPH). The distance and location of the object is determined by 8 object sensors: 4 located in the rear bumper and 4 located in the front bumper. The parking assist system will notify the driver using an audible beep signal through the radio.

The parking assist system is made up of the following components:

- Parking assist control module
- Front object alarm sensors
- Rear object alarm sensors
- Parking assist switch
- Parking assist switch indicator

Parking Assist Control Module

The parking assist control module provides an 8 V reference and a low reference to the 8 object alarm sensors. The parking assist control module receives individual signals from each of the 8 sensors and determines the location and distance of an object based on these inputs. When an object is detected, the parking assist control module will send a data message via CAN-Bus to the radio requesting an audible alert.

Object Alarm Sensors

The object alarm sensors are located in the front and rear bumpers of the vehicle. The sensors are used to determine the distance between an object and the bumper. Each sensor emits an ultrasonic frequency which is reflected off any object located in front of or behind the vehicle. These reflections are received by the sensors. The time difference between the emission of the frequency and when the reflection is received is known as sensor echo time, it is used to determine the distance to the object. The sensors report this information to the parking assist control module.

Parking Assist Switch

The parking assist can be activated and deactivated by pressing the parking assist switch. By engaging the reverse gear the parking assist can also be activated. By subsequently pressing the parking assist switch the parking assist can be disabled again.

Parking Assist Switch Indicator

The indicator in the parking assist switch shows the status of the parking assist. If the lamp is ON, the parking assist is activated.

Parking Assist Operation

When an object is within the measuring range of the sensor, the ultrasonic pulse is reflected and is received by the sending or a neighbouring sensor. The sensor converts this signal into a voltage signal and sends this signal to the parking assist control module. The parking assist control module evaluates the sensor signals received. As soon as an object is within the measuring range, the parking assist control module sends a message via CAN-Bus to the radio in order to give out the acoustic distance signal.

The parking assist system can detect objects greater than 7.6 cm (3 in) wide and 25.4 cm (10 in) tall. The system cannot detect objects below the bumper, underneath the vehicle. If an object is detected, one of the following will occur:

- The measuring range of the front object alarm sensors is between 30-120 cm (11.8-47.2 in). From a distance of 120 cm (47.2 in), the acoustic signal is active. The frequency of the beep sound increases with decreasing distance. From a distance less than 30 cm (11.8 in), the sound becomes continuous.
- The measuring range of the rear object alarm sensors is between 30-250 cm (11.8-98.4 in). From a distance of 250 cm (98.4 in), the acoustic signal is active. The frequency of the beep sound increases with decreasing distance. From a distance less than 30 cm (11.8 in), the sound becomes continuous.

The parking assist can be activated and deactivated by pressing the parking assist switch. When REVERSE gear is selected, park assist is engaged automatically for both front and rear sensors. When the vehicle is put into DRIVE from REVERSE the front assist sensors will be active up to speeds of 8 km/h (5 MPH) to assist with parking manoeuvres. Once the vehicle is above 8 km/h (5 MPH) the front sensors are disabled and will not be enabled until either REVERSE gear is selected or the parking assist switch is pressed to activate the system. Once the parking assist switch is pressed during a key cycle the front sensors become active at speeds under 8 km/h (5 MPH). If the park assist switch is pressed again in the same key cycle the message "Park Assist Off" will be displayed in the driver information centre if the vehicle speed is under 8 km/h (5 MPH) and front sensors detect an object within 120 cm (47.2 in). The LED indicator on the parking assist switch provides the ON/OFF state of the system. If the indicator is ON, the system is active and ready to assist.

The parking assist control module carries out a self test and monitors the sensors for electrical and mechanical faults. Monitored is the power supply of each sensor and the sensor signals, which need to alter when the vehicle moves. If this is not the case, the sensor is acoustically blocked or faulty. Mud, ice and snow may cause obstruction of the function of the sensors. Besides that the parking assist control module checks whether the correct type of sensor is installed. If any of these tests fails, a DTC with corresponding symptom is set, the parking assist is deactivated and the parking assist indicator in the instrument panel cluster is activated.

Parking Assist System Driver Information Centre Messages

SERVICE PARK ASSIST

The driver information centre displays SERVICE PARK ASSIST when the parking assist control module detects a malfunction in the parking assist system and the system is disabled. The driver information centre also displays SERVICE PARK ASSIST when a loss of communication occurs with the parking assist control module.

PARK ASSIST OFF

The PARK ASSIST OFF message is displayed in the driver information centre when the parking assist system is disabled due to conditions that disable or inhibit the system. The parking assist control module requests the driver information centre display PARK ASSIST OFF when it detects one of the following conditions:

- The parking assist system is manually disabled using the parking assist switch.
- An object is attached to the rear of the vehicle, such as a trailer, bicycle rack, trailer hitch receiver, or tow bar. Also, an object extending beyond a lowered endgate will disable the system.
- The parking assist sensors are covered by snow, mud, dirt, slush, or ice.
- The vehicle bumper is damaged.
- Excessive paint thickness on a replacement parking assist sensor.
- The parking assist sensors are disrupted by vibrations, like those caused by a large nearby vehicle or from heavy equipment such as a jackhammer.

© Copyright Chevrolet. All rights reserved

Remote Function Schematics

Figure 1: Keyless Entry
Figure 2: Passive Start and Passive Entry
Figure 3: Garage Door Opener

© Copyright Chevrolet. All rights reserved

DTC B097B

Diagnostic Instructions

- Perform the Diagnostic System Check - Vehicle prior to using this diagnostic procedure.
- Review Strategy Based Diagnosis for an overview of the diagnostic approach.
- Diagnostic Procedure Instructions provides an overview of each diagnostic category.

DTC Descriptors

DTC B097B 02: Power Mode Start Switch Circuit Short to Ground

DTC B097B 05: Power Mode Start Switch Circuit High Voltage/Open

DTC B097B 08: Power Mode Start Switch Circuit Performance - Signal Invalid

DTC B097B 61: Power Mode Start Switch Circuit Stuck

Circuit/System Description

The keyless entry control module supplies the ignition mode switch a constant B+ signal on the ignition switch run signal circuit. The keyless entry control module monitors this signal to determine the igniting mode. When the ignition mode switch is not pressed, voltage on the signal circuit is pulled down through two resistors in the switch. When the ignition mode switch is pressed, voltage on the signal circuit is pulled down through only one resistor, changing the voltage seen at the keyless entry control module and indicating that the ignition mode switch is pressed.

Conditions for Running the DTC

Voltage supplied to the module is in the normal operating voltage range of 9-16 V.

Conditions for Setting the DTC

B097B 02

- The keyless entry control module detects a short to ground in the respective circuit, when the output is inactive.
- The above condition exists for more than 1 second.

B097B 05

- The keyless entry control module detects an open in the ignition mode circuit
- The above condition exists for more than 1 second.

B097B 08

- The keyless entry control module detects a change in the ignition mode without observing a switch press.
- The above condition occurs four consecutive times.

B097B 61

- The keyless entry control module detects a continuously closed ignition mode switch.
- The above condition exists for more than 1 minute.

Action Taken When the DTC Sets

No action is taken.

Conditions for Clearing the DTC

- A current DTC clears when the malfunction is no longer present.
- A history DTC clears when the module ignition cycle counter reaches the reset threshold, without a repeat of the malfunction.

Reference Information

Schematic Reference

Power Moding Schematics

Connector End View Reference

Component Connector End Views

Description and Operation

- Retained Accessory Power Description and Operation
- Power Mode Description and Operation
- Keyless Entry System Description and Operation

Electrical Information Reference

- Circuit Testing
- Connector Repairs
- Testing for Intermittent Conditions and Poor Connections
- Wiring Repairs

Scan Tool Reference

Control Module References for scan tool information

Circuit/System Testing

1. Verify DTC B097B 08 or B097B 61 is not set.
   If any of the DTCs are set
   Test or replace the S38 ignition mode switch.
   If none of the DTCs are set
2. Vehicle OFF, disconnect the X1 harness connector at the K84 keyless entry control module, Vehicle in Service Mode.
3. Test for less than 1 V between the signal circuit terminal 11 and ground.
   If 1 V or greater
   3.1. Vehicle OFF, disconnect the harness connector at the S38 ignition mode switch, Vehicle in Service Mode.
   3.2. Test for less than 1 V between the signal circuit and ground.
   If 1 V or greater, repair the short to voltage on the circuit.
   If less than 1 V, replace the S38 ignition mode switch.
   If less than 1 V
4. Connect the X1 harness connector at the K84 keyless entry control module.
5. Vehicle OFF and all vehicle systems OFF, disconnect the harness connector at the S38 ignition mode switch. It may take up to 2 minutes for all vehicle systems to power down.
6. Test for less than 15 Ω between the low reference circuit terminal 7 and ground.
   If 10 Ω or greater
   6.1. Vehicle OFF, disconnect the harness connector at the K84 keyless entry control module.
   6.2. Test for less than 2 Ω in the low reference circuit end to end.
   If 2 Ω or greater, repair the open/high resistance in the circuit.
   If less than 2 Ω, replace the K84 keyless entry control module.

If less than 10 Ω

7. Verify that a test lamp illuminates between signal circuit terminal 3 and ground.
   If the test lamp does not illuminate
   7.1. Vehicle OFF, disconnect the harness connector at the K84 keyless entry control module.
   7.2. Test for infinite resistance between the signal circuit and ground.
   If less than infinite resistance, repair the short to ground on the circuit.
   If infinite resistance
   7.3. Test for less than 2 Ω in the signal circuit end to end.
   If 2 Ω or greater, repair the open/high resistance in the circuit.
   If less than 2 Ω, replace the K84 keyless entry control module.
   If the test lamp illuminates
8. Test or replace the S38 ignition mode switch.

Repair Instructions

Perform the Diagnostic Repair Verification after completing the diagnostic procedure.

- Ignition and Start Switch Replacement
- Control Module References for keyless entry control module replacement, setup, and programming

&#169© Copyright Chevrolet. All rights reserved

DTC B3101

Diagnostic Instructions

- Perform the Diagnostic System Check - Vehicle prior to using this diagnostic procedure.
- Review Strategy Based Diagnosis for an overview of the diagnostic approach.
- Diagnostic Procedure Instructions provides an overview of each diagnostic category.

DTC Descriptor

DTC B3101 00: Keyless Entry Data Link Circuit

Diagnostic Fault Information

Circuit	Short to Ground	Open/High Resistance	Short to Voltage	Signal Performance
B+	B3101 00	B3101 00	--	--
Serial Data - Enable Line	B3101 00	B3101 00	B3101 00	B3101 00
Serial Data - Receive	B3101 00	B3101 00	B3101 00	B3101 00
Low Reference	--	B3101 00	--	--

Circuit/System Description

The body control module (BCM) communicates with the remote control door lock receiver through the keyless entry serial data circuits. When any button on the keyless entry transmitter is pressed, the transmitter sends a signal to the remote control door lock receiver. The remote control door lock receiver sends a function request to the BCM, depending on which button is pressed on the transmitter. The BCM receives the message and performs the appropriate function.

Conditions for Running the DTC

A button is pressed on the keyless entry transmitter.

Conditions for Setting the DTC

No response is received from the remote control door lock receiver after the BCM requests information from or sends configuration commands to the remote control door lock receiver.

Action Taken When the DTC Sets

In the case of power loss, the remote control door lock receiver is disabled for 65 seconds. Otherwise no action is taken.

Conditions for Clearing the DTC

- A current DTC will clear when the fault is no longer present.
- A history DTC will clear after 40 consecutive ignition cycles without a fault present.

Reference Information

Schematic Reference

Remote Function Schematics

Component Connector End Views

Component Connector End Views

Description and Operation

Keyless Entry System Description and Operation

Electrical Information Reference

- Circuit Testing
- Connector Repairs
- Testing for Intermittent Conditions and Poor Connections
- Wiring Repairs

Scan Tool Reference

Control Module References for scan tool information

Circuit/System Testing

1. Vehicle OFF and all vehicle systems OFF, disconnect the harness connector at the K77 remote control door lock receiver. It may take up to 2 minutes for all vehicle systems to power down.
2. Test for less than 30 Ω between the low reference circuit terminal 1 and ground.

If 30 Ω or greater

2.1. Vehicle OFF, disconnect the harness connector at the BCM.
2.2. Test for less than 2 Ω in the low reference circuit end to end.
If 2 Ω or greater, repair the open/high resistance in the circuit.
If less than 2 Ω, replace the BCM.

If less than 30 Ω

3. Vehicle in Service Mode.
4. Test for greater than 11.5 V between the B+ circuit terminal 4 and ground.

If 11.5 V or less

4.1. Vehicle OFF, disconnect the harness connector at the BCM.
4.2. Test for infinite resistance between the B+ circuit and ground.
If less than infinite resistance, repair the short to ground on the circuit.
If Infinite resistance.
4.3. Test for less than 2 Ω in the B+ circuit end to end.
If 2 Ω or greater, repair the open/high resistance in the circuit.
If less than 2 Ω, replace the BCM.

If greater than 11.5 V

5. Test for 3-6 V between the serial data circuit terminal 3 and ground.

If less than 3 V

5.1. Vehicle OFF, disconnect the harness connector at the BCM.
5.2. Test for infinite resistance between the serial data circuit and ground.
If less than infinite resistance, repair the short to ground on the circuit.
If infinite resistance
5.3. Test for less than 2 Ω in the serial data circuit end to end.
If 2 Ω or greater, repair the open/high resistance in the circuit.
If less than 2 Ω, replace the BCM.

If greater than 6 V

5.1. Vehicle OFF, disconnect the harness connector at the BCM, Vehicle in Service Mode.
5.2. Test for less than 1 V between the serial data circuit and ground.
If 1 V or greater, repair the short to voltage on the circuit.
If less than 1 V, replace the BCM.

If within than 3-6 V

6. Vehicle OFF, disconnect the X1 and X2 harness connectors at the K9 BCM, Vehicle in Service Mode.
7. Test for less than 1 V between the K9 BCM serial data circuit terminal 27 X2 and ground.

If 1 V or greater

Repair the short to voltage on the circuit.

If less than 1 V

8. Vehicle OFF.
9. Test for infinite resistance between the K9 BCM serial data circuit terminal 27 X2 and ground.
   If less than infinite resistance

   Repair the short to ground on the circuit.

   If infinite resistance
10. Test for less than 2 Ω between the K9 BCM serial data circuit terminal 27 X2 and the K77 remote control door lock receiver serial data circuit terminal 2.
    If 2 Ω or greater

    Repair the open/high resistance in the circuit.

    If less than 2 Ω
11. Replace the K77 remote control door lock receiver.
12. Verify DTC B3101 is not set as current.
    If DTC B3101 is set as current

    Replace the K9 BCM

    If DTC B3101 is not set or is set as history
13. All OK.

Repair Instructions

Perform the Diagnostic Repair Verification after completing the diagnostic procedure.

Control Module References for BCM or remote control door lock receiver replacement, programming and setup

&#169© Copyright Chevrolet. All rights reserved

DTC B3105

Diagnostic Instructions

- Perform the Diagnostic System Check - Vehicle prior to using this diagnostic procedure.
- Review Strategy Based Diagnosis for an overview of the diagnostic approach.
- Diagnostic Procedure Instructions provides an overview of each diagnostic category.

DTC Descriptor

DTC B3105 00: Keyless Entry System Transmitters

Circuit/System Description

The body control module (BCM) monitors the number of keyless entry transmitters programmed. Until at least one transmitter is programmed, the BCM determines a malfunction condition exists.

Conditions for Running the DTC

The BCM has been set up without transmitters being programmed.

Conditions for Setting the DTC

No keyless entry transmitter programmed to the BCM.

Action Taken When the DTC Sets

The keyless entry system is inoperative.

Conditions for Clearing the DTC

A current DTC is cleared when at least one transmitter has been programmed to the BCM.

Reference Information

Schematic Reference

Remote Function Schematics

Connector End View Reference

Component Connector End Views

Description and Operation

Keyless Entry System Description and Operation

Electrical Information Reference

- Circuit Testing
- Connector Repairs
- Testing for Intermittent Conditions and Poor Connections
- Wiring Repairs

Scan Tool Reference

Control Module References for scan tool information

Circuit/System Verification

1. Verify that the transmitter is a correct transmitter for the vehicle. This can be accomplished by comparing the part number printed on the transmitter to the appropriate part number in the parts catalogue.
   If the transmitter is incorrect
   Replace the transmitter.
   If the transmitter is correct
2. Program the transmitter. Refer to Key with Integrated Transmitter Programming .
3. Verify the transmitter has successfully completed the programming procedure.
   If the transmitter does not program successfully
   Replace the transmitter.
   If the transmitter programs successfully
4. All OK.

Repair Instructions

Perform the Diagnostic Repair Verification after completing the repair.

Key with Integrated Transmitter Programming

&#169© Copyright Chevrolet. All rights reserved

DTC B3106

Diagnostic Instructions

- Perform the Diagnostic System Check - Vehicle prior to using this diagnostic procedure.
- Review Strategy Based Diagnosis for an overview of the diagnostic approach.
- Diagnostic Procedure Instructions provides an overview of each diagnostic category.

DTC Descriptor

DTC B3106 00: Keyless Entry Data Link

Circuit/System Description

The body control module (BCM) communicates with the remote control door lock receiver through the keyless entry serial data circuits. When any button on the keyless entry transmitter is pressed, the transmitter sends a signal to the remote control door lock receiver. The remote control door lock receiver sends a function request to the BCM, depending on which button is pressed on the transmitter. The BCM receives the message and performs the appropriate function.

Conditions for Setting the DTC

The transmitter that is sending a signal to the remote control door lock receiver is different from those transmitters stored in the BCM.

Action Taken When the DTC Sets

No action is taken.

Conditions for Clearing the DTC

- A current DTC will clear when the fault is no longer present and the ignition mode switch is cycled.
- A history DTC will clear after 40 consecutive ignition cycles without a fault present.

Reference Information

Schematic Reference

Remote Function Schematics

Component Connector End Views

Component Connector End Views

Description and Operation

Keyless Entry System Description and Operation

Electrical Information Reference

- Circuit Testing
- Connector Repairs
- Testing for Intermittent Conditions and Poor Connections
- Wiring Repairs

Scan Tool Reference

Control Module References for scan tool information

Circuit/System Verification

1. With a valid and learned transmitter, press a button on the transmitter.
2. Verify that DTC B3106 is not set.
   If DTC B3106 is set
   Replace the K77 remote control door lock receiver.
   If DTC B3106 is not set
3. All OK.

Repair Instructions

Perform the Diagnostic Repair Verification after completing the diagnostic procedure.

Control Module References for remote control door lock receiver replacement, setup and programming

&#169© Copyright Chevrolet. All rights reserved

DTC B3109-B3113

Diagnostic Instructions

- Perform the Diagnostic System Check - Vehicle prior to using this diagnostic procedure.
- Review Strategy Based Diagnosis for an overview of the diagnostic approach.
- Diagnostic Procedure Instructions provides an overview of each diagnostic category.

DTC Descriptors

DTC B3109 00: Keyless Entry Transmitter 1 Battery

DTC B3110 00: Keyless Entry Transmitter 2 Battery

DTC B3111 00: Keyless Entry Transmitter 3 Battery

DTC B3112 00: Keyless Entry Transmitter 4 Battery

DTC B3113 00: Keyless Entry Transmitter 5 Battery

Circuit/System Description

With each press of a keyless entry transmitter button, a message containing the current battery state of the transmitter is sent to the remote control door lock receiver, along with the commanded keyless entry function. The remote control door lock receiver sends this to the body control module (BCM) to perform the requested function.

Conditions for Running the DTC

A keyless transmitter button is pressed.

Conditions for Setting the DTC

3 consecutive low battery signals are received from the same transmitter.

Action Taken When the DTC Sets

The keyless entry system is inoperative.

Conditions for Clearing the DTC

The DTC is cleared when a normal transmitter voltage signal is received from the transmitter that set the DTC.

Reference Information

Schematic Reference

Remote Function Schematics

Connector End View Reference

Component Connector End Views

Description and Operation

Keyless Entry System Description and Operation

Electrical Information Reference

- Circuit Testing
- Connector Repairs
- Testing for Intermittent Conditions and Poor Connections
- Wiring Repairs

Scan Tool Reference

Control Module References for scan tool information

Circuit/System Verification

1. Verify none of the DTCs listed below are set:
   - DTC B3109
   - DTC B3110

- DTC B3111
- DTC B3112
- DTC B3113

If any of the DTCs are set

1.1. Replace the battery in the appropriate keyless entry transmitter and operate the transmitter 3 consecutive times.
1.2. Verify the DTC does not set.
If the DTC sets, replace the keyless entry transmitter.
If the DTC does not set
1.3. All OK.

If none of the DTCs are set

2. All OK.

Repair Instructions

Perform the Diagnostic Repair Verification after completing the repair.

Key with Integrated Transmitter Programming

&#169© Copyright Chevrolet. All rights reserved

DTC B310D-B310F

Diagnostic Instructions

- Perform the Diagnostic System Check - Vehicle prior to using this diagnostic procedure.
- Review Strategy Based Diagnosis for an overview of the diagnostic approach.
- Diagnostic Procedure Instructions provides an overview of each diagnostic category.

DTC Descriptors

DTC B310D 00: Keyless Entry Transmitter 6 Battery

DTC B310E 00: Keyless Entry Transmitter 7 Battery

DTC B310F 00: Keyless Entry Transmitter 8 Battery

Circuit/System Description

With each press of a keyless entry transmitter button, a message containing the current battery state of the transmitter is sent to the remote control door lock receiver, along with the commanded keyless entry function. The remote control door lock receiver sends this to the body control module (BCM) to perform the requested function.

Conditions for Running the DTC

A keyless transmitter button is pressed.

Conditions for Setting the DTC

3 consecutive low battery signals are received from the same transmitter.

Action Taken When the DTC Sets

The keyless entry system is inoperative.

Conditions for Clearing the DTC

The DTC is cleared when a normal transmitter voltage signal is received from the transmitter that set the DTC.

Reference Information

Schematic Reference

Remote Function Schematics

Connector End View Reference

Component Connector End Views

Description and Operation

Keyless Entry System Description and Operation

Electrical Information Reference

- Circuit Testing
- Connector Repairs
- Testing for Intermittent Conditions and Poor Connections
- Wiring Repairs

Scan Tool Reference

Control Module References for scan tool information

Circuit/System Verification

1. Verify none of the DTCs listed below are set:
   - DTC B310D
   - DTC B310E
   - DTC B310F

   If any of the DTCs are set

   1.1. Replace the battery in the appropriate keyless entry transmitter and operate the transmitter 3 consecutive times.
   1.2. Verify the DTC does not set.

If the DTC sets, replace the keyless entry transmitter.
If the DTC does not set

1.3. All OK.

If none of the DTCs are set

2. All OK.

Repair Instructions

Perform the Diagnostic Repair Verification after completing the repair.

Key with Integrated Transmitter Programming

&#169© Copyright Chevrolet. All rights reserved

DTC B3119

Diagnostic Instructions

- Perform the Diagnostic System Check - Vehicle prior to using this diagnostic procedure.
- Review Strategy Based Diagnosis for an overview of the diagnostic approach.
- Diagnostic Procedure Instructions provides an overview of each diagnostic category.

DTC Descriptors

DTC B3119 02: Keyless Entry Aerial 1 Short to Ground

DTC B3119 05: Keyless Entry Aerial 1 High Voltage/Open

Diagnostic Fault Information

Circuit	Short to Ground	Open/High Resistance	Short to Voltage	Signal Performance
Keyless Entry Aerial Signal - Driver Door	B3119 02	B3119 05	B3119 05	-
Keyless Entry Aerial Low Reference - Driver Door	-	B3119 05	--	--

Circuit/System Description

The driver door handle aerial is located in the driver door handle assembly and is used to establish low frequency communications with the keyless entry transmitter. As a vehicle with locked doors is approached with a keyless entry transmitter and the exterior door handle is pulled, the keyless entry control module communicates with the driver door handle keyless entry aerial.

Conditions for Running the DTC

- The touch pad in the driver door handle is touched within 15 minutes of last door closing.
- The front or rear door handle on the driver side is pulled.

Conditions for Setting the DTC

B3119 02

The keyless entry control module detects a short to ground on the driver door keyless entry aerial signal circuit.

B3119 05

The keyless entry control module detects a short to voltage or an open on the driver door keyless entry aerial signal circuit.

Action Taken When the DTC Sets

Doors will not unlock when front or rear driver handle is pulled. Doors will not lock with touch pad.

Conditions for Clearing the DTC

- A current DTC will clear when the conditions for setting the DTC are no longer present.
- A history DTC will clear after 40 malfunction-free ignition cycles.

Reference Information

Schematic Reference

Remote Function Schematics

Connector End View Reference

Component Connector End Views

Description and Operation

Keyless Entry System Description and Operation

Electrical Information Reference

- Circuit Testing
- Connector Repairs
- Testing for Intermittent Conditions and Poor Connections
- Wiring Repairs

Scan Tool Reference

Control Module References for scan tool information

Circuit/System Verification

1. Vehicle in Service Mode.
2. Verify that DTC B3122, B3123, or B3124 is not set.
   If any of the DTCs are set
   Refer to Diagnostic Trouble Code (DTC) List - Vehicle .
   If none of the DTCs are set
3. Refer to Circuit/System Testing.

Circuit/System Testing

Note: The A24D driver exterior door handle assembly has two harness connectors. Of these two harness connectors, make sure that only the T10M driver door handle keyless entry aerial harness connector is disconnected. Disconnecting both harness connectors will result in the inability to activate the aerial and cause an improper diagnosis.

1. Vehicle OFF, disconnect the harness connector at the T10M driver door handle keyless entry aerial, Vehicle in Service Mode.
2. Test for less than 1 V between the signal circuit terminal 1 and ground.
   If 1 V or greater
   2.1. Vehicle OFF, disconnect the harness connector at the K84 keyless entry control module, Vehicle in Service Mode.
   2.2. Test for less than 1 V between the signal circuit and ground.
   If 1 V or greater, repair the short to voltage on the circuit.
   If less than 1 V, replace the K84 keyless entry control module.
   If less than 1 V

Note: When using the MIN MAX function, autorange on the DMM may not function properly. To ensure accurate test results, turn off autorange and manually set the DMM range to 000.0 V.

3. Vehicle OFF, install a DMM between the signal circuit terminal 1 and ground. Set the DMM to capture DC voltage using the MIN MAX function.
4. Lock the vehicle doors using the keyless entry transmitter. Activate the aerial by pulling the driver exterior door handle.
5. Verify the MAX voltage captured by the DMM is greater than 1 V.
   If 1 V or less
   5.1. Vehicle OFF, disconnect the harness connector at the K84 keyless entry control module.
   5.2. Test for infinite resistance between the signal circuit and ground.
   If less than infinite resistance, repair the short to ground on the circuit.
   If infinite resistance

5.3. Test for less than 2 Ω in the signal circuit end to end.
If 2 Ω or greater, repair the open/high resistance in the circuit.
If less than 2 Ω, replace the K84 keyless entry control module.

If greater than 1 V

6. Test for less than 1 V between the low reference circuit terminal 2 and ground.

If 1 V or greater

6.1. Vehicle OFF, disconnect the harness connector at the K84 keyless entry control module, Vehicle in Service Mode.
6.2. Test for less than 1 V between the low reference circuit and ground.
If 1 V or greater, repair the short to voltage on the circuit.
If less than 1 V, replace the K84 keyless entry control module.

If less than 1 V

Note: When using the MIN MAX function, autorange on the DMM may not function properly. To ensure accurate test results, turn off autorange and manually set the DMM range to 000.0 V.

7. Install a DMM between the signal circuit terminal 1 and the low reference circuit terminal 2. Set the DMM to capture DC voltage using the MIN MAX function.
8. Lock the vehicle doors using the keyless entry transmitter. Activate the aerial by pulling the driver exterior door handle.
9. Verify the MAX voltage captured by the DMM is greater than 1 V.

If 1 V or less

9.1. Vehicle OFF, disconnect the harness connector at the K84 keyless entry control module.
9.2. Test for less than 2 Ω in the low reference circuit end to end.
If 2 Ω or greater, repair the open/high resistance in the circuit.
If less than 2 Ω, replace the K84 keyless entry control module.

If greater than 1 V

10. Replace the A24D driver exterior door handle assembly.
11. Lock the vehicle doors using the keyless entry transmitter. Activate the aerial by pulling the driver exterior door handle.
12. Verify DTC B3119 is not set as current.

If DTC B3119 is set as current

Replace the K84 keyless entry control module.

If DTC B3119 is not set or is set as history

13. All OK.

Repair Instructions

Perform the Diagnostic Repair Verification after completing the diagnostic procedure.

- Front Side Door Outside Handle Bracket Replacement
- Control Module References for keyless entry control module replacement, setup, and programming

&#169© Copyright Chevrolet. All rights reserved

DTC B3120

Diagnostic Instructions

- Perform the Diagnostic System Check - Vehicle prior to using this diagnostic procedure.
- Review Strategy Based Diagnosis for an overview of the diagnostic approach.
- Diagnostic Procedure Instructions provides an overview of each diagnostic category.

DTC Descriptors

DTC B3120 02: Keyless Entry Aerial 2 Short to Ground

DTC B3120 05: Keyless Entry Aerial 2 High Voltage/Open

Diagnostic Fault Information

Circuit	Short to Ground	Open/High Resistance	Short to Voltage	Signal Performance
Keyless Entry Aerial Signal - Passenger Door	B3120 02	B3120 05	B3120 05	-
Keyless Entry Aerial Low Reference - Passenger Door	-	B3120 05	--	--

Circuit/System Description

The passenger front door handle aerial is located in the passenger front door handle assembly and is used to establish low frequency communications with the keyless entry transmitter. As a vehicle with locked doors is approached with a keyless entry transmitter and the exterior door handle is pulled, the keyless entry control module communicates with the passenger front door handle keyless entry aerial.

Conditions for Running the DTC

- The touch pad in the passenger front door handle is touched within 15 minutes of the last change of door ajar status for any door.
- The front or rear door handle on the passenger side is pulled.

Conditions for Setting the DTC

B3120 02

The keyless entry control module detects a short to ground on the passenger front door keyless entry aerial signal circuit.

B3120 05

The keyless entry control module detects a short to B+ or an open on the passenger front door keyless entry aerial signal circuit.

Action Taken When the DTC Sets

Doors will not unlock when front passenger handle is pulled. Doors will not lock with passenger touch pad.

Conditions for Clearing the DTC

- A current DTC will clear when the conditions for setting the DTC are no longer present.
- A history DTC will clear after 40 malfunction-free ignition cycles.

Reference Information

Schematic Reference

Remote Function Schematics

Connector End View Reference

Component Connector End Views

Description and Operation

Keyless Entry System Description and Operation

Electrical Information Reference

- Circuit Testing
- Connector Repairs
- Testing for Intermittent Conditions and Poor Connections
- Wiring Repairs

Scan Tool Reference

Control Module References for scan tool information

Circuit/System Verification

1. Vehicle in Service Mode.
2. Verify that DTC B3122, B3123, or B3124 is not set.
   If any of the DTCs are set
   Refer to Diagnostic Trouble Code (DTC) List - Vehicle .
   If none of the DTCs are set
3. Refer to Circuit/System Testing.

Circuit/System Testing

Note: The A24P passenger exterior door handle assembly has two harness connectors. Of these two harness connectors, make sure that only the T10N passenger door handle keyless entry aerial harness connector is disconnected. Disconnecting both harness connectors will result in the inability to activate the aerial and cause an improper diagnosis.

1. Vehicle OFF, disconnect the harness connector at the T10N passenger door handle keyless entry aerial, Vehicle in Service Mode.
2. Test for less than 1 V between the signal circuit terminal 1 and ground.
   If 1 V or greater
   2.1. Vehicle OFF, disconnect the harness connector at the K84 keyless entry control module, Vehicle in Service Mode.
   2.2. Test for less than 1 V between the signal circuit and ground.
   If 1 V or greater, repair the short to voltage on the circuit.
   If less than 1 V, replace the K84 keyless entry control module.
   If less than 1 V

   Note: When using the MIN MAX function, autorange on the DMM may not function properly. To ensure accurate test results, turn off autorange and manually set the DMM range to 000.0 V.

3. Vehicle OFF, install a DMM between the signal circuit terminal 1 and ground. Set the DMM to capture DC voltage using the MIN MAX function.
4. Lock the vehicle doors using the keyless entry transmitter. Activate the aerial by pulling the driver exterior door handle.
5. Verify the MAX voltage captured by the DMM is greater than 1 V.
   If 1 V or less
   5.1. Vehicle OFF, disconnect the harness connector at the K84 keyless entry control module.
   5.2. Test for infinite resistance between the signal circuit and ground.
   If less than infinite resistance, repair the short to ground on the circuit.
   If infinite resistance

5.3. Test for less than 2 Ω in the signal circuit end to end.
If 2 Ω or greater, repair the open/high resistance in the circuit.
If less than 2 Ω, replace the K84 keyless entry control module.

If greater than 1 V

6. Test for less than 1 V between the low reference circuit terminal 2 and ground.

If 1 V or greater

6.1. Vehicle OFF, disconnect the harness connector at the K84 keyless entry control module, Vehicle in Service Mode.
6.2. Test for less than 1 V between the low reference circuit and ground.
If 1 V or greater, repair the short to voltage on the circuit.
If less than 1 V, replace the K84 keyless entry control module.

If less than 1 V

Note: When using the MIN MAX function, autorange on the DMM may not function properly. To ensure accurate test results, turn off autorange and manually set the DMM range to 000.0 V.

7. Install a DMM between the signal circuit terminal 1 and the low reference circuit terminal 2. Set the DMM to capture DC voltage using the MIN MAX function.
8. Lock the vehicle doors using the keyless entry transmitter. Activate the aerial by pulling the driver exterior door handle.
9. Verify the MAX voltage captured by the DMM is greater than 1 V.

If 1 V or less

9.1. Vehicle OFF, disconnect the harness connector at the K84 keyless entry control module.
9.2. Test for less than 2 Ω in the low reference circuit end to end.
If 2 Ω or greater, repair the open/high resistance in the circuit.
If less than 2 Ω, replace the K84 keyless entry control module.

If greater than 1 V

10. Replace the A24D driver exterior door handle assembly.
11. Lock the vehicle doors using the keyless entry transmitter. Activate the aerial by pulling the driver exterior door handle.
12. Verify DTC B3120 is not set as current.

If DTC B3120 is set as current

Replace the K84 keyless entry control module.

If DTC B3120 is not set or is set as history

13. All OK.

Repair Instructions

Perform the Diagnostic Repair Verification after completing the diagnostic procedure.

- Front Side Door Outside Handle Bracket Replacement
- Control Module References for keyless entry control module replacement, setup, and programming

&#169© Copyright Chevrolet. All rights reserved

DTC B3121

Diagnostic Instructions

- Perform the Diagnostic System Check - Vehicle prior to using this diagnostic procedure.
- Review Strategy Based Diagnosis for an overview of the diagnostic approach.
- Diagnostic Procedure Instructions provides an overview of each diagnostic category.

DTC Descriptors

DTC B3121 02: Keyless Entry Aerial 3 Short to Ground

DTC B3121 05: Keyless Entry Aerial 3 High Voltage/Open

Diagnostic Fault Information

Circuit	Short to Ground	Open/High Resistance	Short to Voltage	Signal Performance
Keyless Entry Aerial Signal - Rear Fascia	B3121 02	B3121 05	B3121 05	-
Keyless Entry Aerial Low Reference - Rear Fascia	-	B3121 05	--	--

Circuit/System Description

The rear fascia aerial is located in the rear fascia assembly and is used to establish low frequency communications with the keyless entry transmitter. As a vehicle with locked doors is approached with a keyless entry transmitter and the exterior rear closure touch pad is pressed, the keyless entry control module communicates with the rear fascia keyless entry aerial.

Conditions for Running the DTC

- The rear closure touch pad is pressed.
- The scan tool activates a device control function to simulate the above action.

Conditions for Setting the DTC

B3121 02

The keyless entry control module detects a short to ground on the rear fascia keyless entry aerial signal circuit.

B3121 05

The keyless entry control module detects a short to B+ or an open on the rear fascia keyless entry aerial signal circuit.

Action Taken When the DTC Sets

Rear closure will not open when rear closure touch pad is pressed.

Conditions for Clearing the DTC

- A current DTC will clear when the conditions for setting the DTC are no longer present.
- A history DTC will clear after 40 malfunction-free ignition cycles.

Reference Information

Schematic Reference

Remote Function Schematics

Connector End View Reference

Component Connector End Views

Description and Operation

Keyless Entry System Description and Operation

Electrical Information Reference

- Circuit Testing
- Connector Repairs
- Testing for Intermittent Conditions and Poor Connections
- Wiring Repairs

Scan Tool Reference

Control Module References for scan tool information

Circuit/System Verification

1. Vehicle in Service Mode.
2. Verify that DTC B3122, B3123, or B3124 is not set.
   If any of the DTCs are set
   Refer to Diagnostic Trouble Code (DTC) List - Vehicle .
   If none of the DTCs are set
3. Refer to Circuit/System Testing.

Circuit/System Testing

1. Vehicle OFF, disconnect the harness connector at the T10G rear fascia keyless entry aerial, Vehicle in Service Mode.
2. Test for less than 1 V between the signal circuit terminal 1 and ground.
   If 1 V or greater
   2.1. Vehicle OFF, disconnect the harness connector at the K84 keyless entry control module, Vehicle in Service Mode.
   2.2. Test for less than 1 V between the signal circuit and ground.
   If 1 V or greater, repair the short to voltage on the circuit.
   If less than 1 V, replace the K84 keyless entry control module.
   If less than 1 V

   Note: When using the MIN MAX function, autorange on the DMM may not function properly. To ensure accurate test results, turn off autorange and manually set the DMM range to 000.0 V.

3. Vehicle OFF, install a DMM between the signal circuit terminal 1 and ground. Set the DMM to capture DC voltage using the MIN MAX function.
4. Lock the vehicle doors using the keyless entry transmitter. Activate the aerial by pulling the driver exterior door handle. Activate the aerial by pressing the rear closure touch pad.
5. Verify the MAX voltage captured by the DMM is greater than 0.5 V.
   If 0.5 V or less
   5.1. Vehicle OFF, disconnect the harness connector at the K84 keyless entry control module.
   5.2. Test for infinite resistance between the signal circuit and ground.
   If less than infinite resistance, repair the short to ground on the circuit.
   If infinite resistance
   5.3. Test for less than 2 Ω in the signal circuit end to end.
   If 2 Ω or greater, repair the open/high resistance in the circuit.
   If less than 2 Ω, replace the K84 keyless entry control module.

If greater than 0.5V

Note: When using the MIN MAX function, autorange on the DMM may not function properly. To ensure accurate test results, turn off autorange and manually set the DMM range to 000.0 V.

6. Install a DMM between the signal circuit terminal 1 and the low reference circuit terminal 2. Set the DMM to capture DC voltage using the MIN MAX function.
7. Lock the vehicle doors using the keyless entry transmitter. Activate the aerial by pressing the rear closure touch pad.
8. Verify the MAX voltage captured by the DMM is greater than 0.5 V.

   If 0.5 V or less

   8.1. Vehicle OFF, disconnect the harness connector at the K84 keyless entry control module.

   8.2. Test for less than 2 Ω in the low reference circuit end to end.

   If 2 Ω or greater, repair the open/high resistance in the circuit.

   If less than 2 Ω, replace the K84 keyless entry control module.

   If greater than 0.5V

9. Replace the T10G rear fascia keyless entry aerial.
10. Lock the vehicle doors using the keyless entry transmitter. Activate the aerial by pressing the rear closure touch pad.
11. Verify DTC B3121 is not set as current.

    If DTC B3121 is set as current

    Replace the K84 keyless entry control module.

    If DTC B3121 is not set or is set as history

12. All OK.

Repair Instructions

Perform the Diagnostic Repair Verification after completing the diagnostic procedure.

Control Module References for keyless entry control module replacement, setup, and programming

&#169© Copyright Chevrolet. All rights reserved

DTC B3122

Diagnostic Instructions

- Perform the Diagnostic System Check - Vehicle prior to using this diagnostic procedure.
- Review Strategy Based Diagnosis for an overview of the diagnostic approach.
- Diagnostic Procedure Instructions provides an overview of each diagnostic category.

DTC Descriptors

DTC B3122 02: Keyless Entry Aerial 4 Short to Ground

DTC B3122 05: Keyless Entry Aerial 4 High Voltage/Open

Diagnostic Fault Information

Circuit	Short to Ground	Open/High Resistance	Short to Voltage	Signal Performance
Keyless Entry Aerial Signal - Centre Console Front	B3122 02	B3122 05	B3122 05	-
Keyless Entry Aerial Low Reference - Centre Console Front	-	B3122 05	--	--

Circuit/System Description

The front centre console aerial is located in front of the centre console assembly and is used to establish low frequency communications with the keyless entry transmitter. When the driver attempts to change the ignition status of the vehicle, the keyless entry control module communicates with the front centre console aerial.

Conditions for Running the DTC

- The touch pad in the driver door or passenger door handle is touched within 15 minutes of any door ajar status changing.
- The last door becomes closed.
- Pressing the start/stop switch.

Conditions for Setting the DTC

B3122 02

The keyless entry control module detects a short to ground on the front centre console keyless entry aerial signal circuit.

B3122 05

The keyless entry control module detects a short to B+ or an open on the front centre console keyless entry aerial signal circuit.

Action Taken When the DTC Sets

Vehicle will not detect the transmitter in some locations inside the vehicle. If the transmitter is not detected then vehicle will not change ignition modes when start/stop button is pressed.

Conditions for Clearing the DTC

- A current DTC will clear when the conditions for setting the DTC are no longer present.
- A history DTC will clear after 40 malfunction-free ignition cycles.

Reference Information

Schematic Reference

Remote Function Schematics

Connector End View Reference

Component Connector End Views

Description and Operation

Keyless Entry System Description and Operation

Electrical Information Reference

- Circuit Testing
- Connector Repairs
- Testing for Intermittent Conditions and Poor Connections
- Wiring Repairs

Scan Tool Reference

Control Module References for scan tool information

Circuit/System Testing

1. Ignition OFF, disconnect the harness connector at the T10J centre console front keyless entry aerial, ignition ON.
2. Test for less than 1 V between the signal circuit terminal 1 and ground.
   If 1 V or greater
   2.1. Ignition OFF, disconnect the harness connector at the K84 keyless entry control module, ignition ON.
   2.2. Test for less than 1 V between the signal circuit and ground.
   If 1 V or greater, repair the short to voltage on the circuit.
   If less than 1 V, replace the K84 keyless entry control module.
   If less than 1 V

   Note: When using the MIN MAX function, autorange on the DMM may not function properly. To ensure accurate test results, turn off autorange and manually set the DMM range to 000.0 V.

3. Ignition OFF, install a DMM between the signal circuit terminal 1 and ground. Set the DMM to capture DC voltage using the MIN MAX function.
4. Lock the vehicle doors using the keyless entry transmitter. Activate the aerial by pressing the ignition mode switch.
5. Verify the MAX voltage captured by the DMM is greater than 1 V.
   If 1 V or less
   5.1. Ignition OFF, disconnect the harness connector at the K84 keyless entry control module.
   5.2. Test for infinite resistance between the signal circuit and ground.
   If less than infinite resistance, repair the short to ground on the circuit.
   If infinite resistance
   5.3. Test for less than 2 Ω in the signal circuit end to end.
   If 2 Ω or greater, repair the open/high resistance in the circuit.
   If less than 2 Ω, replace the K84 keyless entry control module.
   If greater than 1 V
6. Test for less than 1 V between the low reference circuit terminal 2 and ground.
   If 1 V or greater
   6.1. Ignition OFF, disconnect the harness connector at the K84 keyless entry control module, ignition ON.
   6.2. Test for less than 1 V between the low reference circuit and ground.
   If 1 V or greater, repair the short to voltage on the circuit.
   If less than 1 V, replace the K84 keyless entry control module.
   If less than 1 V

Note: When using the MIN MAX function, autorange on the DMM may not function properly. To ensure accurate test results, turn off autorange and manually set the DMM range to 000.0 V.

7. Install a DMM between the signal circuit terminal 1 and the low reference circuit terminal 2. Set the DMM to capture DC voltage using the MIN MAX function.
8. Lock the vehicle doors using the keyless entry transmitter. Activate the aerial by pressing the ignition mode switch.
9. Verify the MAX voltage captured by the DMM is greater than 1 V.

   If 1 V or less

   9.1. Ignition OFF, disconnect the harness connector at the K84 keyless entry control module.

   9.2. Test for less than 2 Ω in the low reference circuit end to end.

   If 2 Ω or greater, repair the open/high resistance in the circuit.

   If less than 2 Ω, replace the K84 keyless entry control module.

   If greater than 1 V

10. Replace the T10J centre console front keyless entry aerial.
11. Lock the vehicle doors using the keyless entry transmitter. Activate the aerial by pressing the ignition mode switch.
12. Verify DTC B3122 is not set as current.

    If DTC B3122 is set as current

    Replace the K84 keyless entry control module.

    If DTC B3122 is not set or is set as history

13. All OK.

Repair Instructions

Perform the Diagnostic Repair Verification after completing the diagnostic procedure.

- Ignition Lock Key Transmitter Aerial Replacement - Instrument Panel
- Control Module References for keyless entry control module replacement, setup, and programming

&#169© Copyright Chevrolet. All rights reserved

DTC B3123

Diagnostic Instructions

- Perform the Diagnostic System Check - Vehicle prior to using this diagnostic procedure.
- Review Strategy Based Diagnosis for an overview of the diagnostic approach.
- Diagnostic Procedure Instructions provides an overview of each diagnostic category.

DTC Descriptors

DTC B3123 02: Keyless Entry Aerial 5 Short to Ground

DTC B3123 05: Keyless Entry Aerial 5 High Voltage/Open

Diagnostic Fault Information

Circuit	Short to Ground	Open/High Resistance	Short to Voltage	Signal Performance
Keyless Entry Aerial Signal - Centre Console Rear	B3123 02	B3123 05	B3123 05	-
Keyless Entry Aerial Low Reference - Centre Console Rear	-	B3123 05	--	--

Circuit/System Description

The rear centre console aerial is located in rear of the centre console assembly and is used to establish low frequency communications with the keyless entry transmitter. When the driver attempts to change the ignition status of the vehicle, the keyless entry control module communicates with the rear centre console aerial.

Conditions for Running the DTC

- The touch pad in the driver door or passenger door handle is touched within 15 minutes of any door ajar status changing.
- The last door becomes closed.
- Pressing the start/stop switch.

Conditions for Setting the DTC

B3123 02

The keyless entry control module detects a short to ground on the rear centre console keyless entry aerial signal circuit.

B3123 05

The keyless entry control module detects a short to B+ or an open on the rear centre console keyless entry aerial signal circuit.

Action Taken When the DTC Sets

Vehicle will not detect the transmitter in some locations inside the vehicle. If the transmitter is not detected then vehicle will not change ignition modes when start/stop button is pressed.

Conditions for Clearing the DTC

- A current DTC will clear when the conditions for setting the DTC are no longer present.
- A history DTC will clear after 40 malfunction-free ignition cycles.

Reference Information

Schematic Reference

Remote Function Schematics

Connector End View Reference

Component Connector End Views

Description and Operation

Keyless Entry System Description and Operation

Electrical Information Reference

- Circuit Testing
- Connector Repairs
- Testing for Intermittent Conditions and Poor Connections
- Wiring Repairs

Scan Tool Reference

Control Module References for scan tool information

Circuit/System Testing

1. Ignition OFF, disconnect the harness connector at the T10K centre console rear keyless entry aerial, ignition ON.
2. Test for less than 1 V between the signal circuit terminal 1 and ground.
   If 1 V or greater
   2.1. Ignition OFF, disconnect the harness connector at the K84 keyless entry control module, ignition ON.
   2.2. Test for less than 1 V between the signal circuit and ground.
   If 1 V or greater, repair the short to voltage on the circuit.
   If less than 1 V, replace the K84 keyless entry control module.

   If less than 1 V

   Note: When using the MIN MAX function, autorange on the DMM may not function properly. To ensure accurate test results, turn off autorange and manually set the DMM range to 000.0 V.

3. Ignition OFF, install a DMM between the signal circuit terminal 1 and ground. Set the DMM to capture DC voltage using the MIN MAX function.
4. Lock the vehicle doors using the keyless entry transmitter. Activate the aerial by pressing the ignition mode switch.
5. Verify the MAX voltage captured by the DMM is greater than 1 V.
   If 1 V or less
   5.1. Ignition OFF, disconnect the harness connector at the K84 keyless entry control module.
   5.2. Test for infinite resistance between the signal circuit and ground.
   If less than infinite resistance, repair the short to ground on the circuit.
   If infinite resistance
   5.3. Test for less than 2 Ω in the signal circuit end to end.
   If 2 Ω or greater, repair the open/high resistance in the circuit.
   If less than 2 Ω, replace the K84 keyless entry control module.

   If greater than 1 V
6. Test for less than 1 V between the low reference circuit terminal 2 and ground.
   If 1 V or greater
   6.1. Ignition OFF, disconnect the harness connector at the K84 keyless entry control module, ignition ON.
   6.2. Test for less than 1 V between the low reference circuit and ground.
   If 1 V or greater, repair the short to voltage on the circuit.
   If less than 1 V, replace the K84 keyless entry control module.

   If less than 1 V

Note: When using the MIN MAX function, autorange on the DMM may not function properly. To ensure accurate test results, turn off autorange and manually set the DMM range to 000.0 V.

7. Install a DMM between the signal circuit terminal 1 and the low reference circuit terminal 2. Set the DMM to capture DC voltage using the MIN MAX function.
8. Lock the vehicle doors using the keyless entry transmitter. Activate the aerial by pressing the ignition mode switch.
9. Verify the MAX voltage captured by the DMM is greater than 1 V.

   If 1 V or less

   9.1. Ignition OFF, disconnect the harness connector at the K84 keyless entry control module.

   9.2. Test for less than 2 Ω in the low reference circuit end to end.

   If 2 Ω or greater, repair the open/high resistance in the circuit.

   If less than 2 Ω, replace the K84 keyless entry control module.

   If greater than 1 V

10. Replace the T10K centre console rear keyless entry aerial.
11. Lock the vehicle doors using the keyless entry transmitter. Activate the aerial by pressing the ignition mode switch.
12. Verify DTC B3123 is not set as current.

    If DTC B3123 is set as current

    Replace the K84 keyless entry control module.

    If DTC B3123 is not set or is set as history

13. All OK.

Repair Instructions

Perform the Diagnostic Repair Verification after completing the diagnostic procedure.

- Ignition Lock Key Transmitter Aerial Replacement - Floor Console : Rear → Front
- Control Module References for keyless entry control module replacement, setup, and programming

&#169© Copyright Chevrolet. All rights reserved

DTC B3124

Diagnostic Instructions

- Perform the Diagnostic System Check - Vehicle prior to using this diagnostic procedure.
- Review Strategy Based Diagnosis for an overview of the diagnostic approach.
- Diagnostic Procedure Instructions provides an overview of each diagnostic category.

DTC Descriptors

DTC B3124 02: Keyless Entry Aerial 6 Short to Ground

DTC B3124 05: Keyless Entry Aerial 6 High Voltage/Open

Diagnostic Fault Information

Circuit	Short to Ground	Open/High Resistance	Short to Voltage	Signal Performance
Keyless Entry Aerial Signal - Rear Compartment	B3124 02	B3124 05	B3124 05	-
Keyless Entry Aerial Low Reference - Rear Compartment	-	B3124 05	--	--

Circuit/System Description

The rear compartment aerial is located on the rear compartment floor near the seat back, centred, and is used to establish low frequency communications with the keyless entry transmitter. When the driver attempts to change the ignition status of the vehicle, the keyless entry control module communicates with the rear compartment aerial.

Conditions for Running the DTC

- The touch pad in the driver door or passenger door handle is touched within 15 minutes of any door ajar status changing.
- Any exterior door handle or handles is pulled.
- The last door becomes closed.
- Pressing the start/stop switch.

Conditions for Setting the DTC

B3124 02

The keyless entry control module detects a short to ground on the rear compartment keyless entry aerial signal circuit.

B3124 05

The keyless entry control module detects a short to B+ or an open on the rear compartment keyless entry aerial signal circuit.

Action Taken When the DTC Sets

Vehicle will not detect the transmitter in some locations inside the vehicle. If the transmitter is not detected then vehicle will not change ignition modes when start/stop button is pressed.

Conditions for Clearing the DTC

- A current DTC will clear when the conditions for setting the DTC are no longer present.
- A history DTC will clear after 40 malfunction-free ignition cycles.

Reference Information

Schematic Reference

Remote Function Schematics

Connector End View Reference

Component Connector End Views

Description and Operation

Keyless Entry System Description and Operation

Electrical Information Reference

- Circuit Testing
- Connector Repairs
- Testing for Intermittent Conditions and Poor Connections

- Wiring Repairs

Scan Tool Reference

Control Module References for scan tool information

Circuit/System Testing

1. Ignition OFF, disconnect the harness connector at the T10E rear compartment keyless entry aerial, ignition ON.
2. Test for less than 1 V between the signal circuit terminal 1 and ground.
   If 1 V or greater
   2.1. Ignition OFF, disconnect the harness connector at the K84 keyless entry control module, ignition ON.
   2.2. Test for less than 1 V between the signal circuit and ground.
   If 1 V or greater, repair the short to voltage on the circuit.
   If less than 1 V, replace the K84 keyless entry control module.

   If less than 1 V

   Note: When using the MIN MAX function, autorange on the DMM may not function properly. To ensure accurate test results, turn off autorange and manually set the DMM range to 000.0 V.

3. Ignition OFF, install a DMM between the signal circuit terminal 1 and ground. Set the DMM to capture DC voltage using the MIN MAX function.
4. Lock the vehicle doors using the keyless entry transmitter. Activate the aerial by pressing the ignition mode switch.
5. Verify the MAX voltage captured by the DMM is greater than 1 V.
   If 1 V or less
   5.1. Ignition OFF, disconnect the harness connector at the K84 keyless entry control module.
   5.2. Test for infinite resistance between the signal circuit and ground.
   If less than infinite resistance, repair the short to ground on the circuit.
   If infinite resistance
   5.3. Test for less than 2 Ω in the signal circuit end to end.
   If 2 Ω or greater, repair the open/high resistance in the circuit.
   If less than 2 Ω, replace the K84 keyless entry control module.

   If greater than 1 V
6. Test for less than 1 V between the low reference circuit terminal 2 and ground.
   If 1 V or greater
   6.1. Ignition OFF, disconnect the harness connector at the K84 keyless entry control module, ignition ON.
   6.2. Test for less than 1 V between the low reference circuit and ground.
   If 1 V or greater, repair the short to voltage on the circuit.
   If less than 1 V, replace the K84 keyless entry control module.

If less than 1 V

Note: When using the MIN MAX function, autorange on the DMM may not function properly. To ensure accurate test results, turn off autorange and manually set the DMM range to 000.0 V.

7. Install a DMM between the signal circuit terminal 1 and the low reference circuit terminal 2. Set the DMM to capture DC voltage using the MIN MAX function.
8. Lock the vehicle doors using the keyless entry transmitter. Activate the aerial by pressing the ignition mode switch.
9. Verify the MAX voltage captured by the DMM is greater than 1 V.

   If 1 V or less

   9.1. Ignition OFF, disconnect the harness connector at the K84 keyless entry control module.

   9.2. Test for less than 2 Ω in the low reference circuit end to end.

   If 2 Ω or greater, repair the open/high resistance in the circuit.

   If less than 2 Ω, replace the K84 keyless entry control module.

   If greater than 1 V

10. Replace the T10E rear compartment keyless entry aerial.
11. Lock the vehicle doors using the keyless entry transmitter. Activate the aerial by pressing the ignition mode switch.
12. Verify DTC B3124 is not set as current.

    If DTC B3124 is set as current

    Replace the K84 keyless entry control module.

    If DTC B3124 is not set or is set as history

13. All OK.

Repair Instructions

Perform the Diagnostic Repair Verification after completing the diagnostic procedure.

- Ignition Lock Key Transmitter Aerial Replacement - Floor Console : Rear → Front
- Control Module References for keyless entry control module replacement, setup, and programming

&#169© Copyright Chevrolet. All rights reserved

Symptoms - Remote Functions

Note: The following steps must be completed before using the symptom tables.

1. Perform Diagnostic System Check - Vehicle before using the Symptom Tables in order to verify that all of the following are true:
   - There are no DTCs set.
   - The control modules can communicate via the serial data link.
2. Review the system operation in order to familiarize yourself with the system functions. Refer to Keyless Entry System Description and Operation .

Visual/Physical Inspection

- Inspect for aftermarket devices which could affect the operation of the Keyless Entry System. Refer to Checking Aftermarket Accessories .
- Inspect the easily accessible or visible system components for obvious damage or conditions which could cause the symptom.

Intermittent

Faulty electrical connections or wiring may be the cause of intermittent conditions. Refer to Testing for Intermittent Conditions and Poor Connections .

Symptom List

Refer to a symptom diagnostic procedure from the following list in order to diagnose the symptom:

- No Remote Detected
- Keyless Entry System Malfunction : Passive → Active
- Remote Vehicle Start Malfunction

&#169© Copyright Chevrolet. All rights reserved

No Remote Detected

Diagnostic Instructions

- Perform the Diagnostic System Check - Vehicle prior to using this diagnostic procedure.
- Review Strategy Based Diagnosis for an overview of the diagnostic approach.
- Diagnostic Procedure Instructions provides an overview of each diagnostic category.

Diagnostic Fault Information

Circuit	Short to Ground	Open/High Resistance	Short to Voltage	Signal Performance
Keyless Entry Aerial Signal - Front Console	B3122 02	B3122 05	B3122 05	-
Keyless Entry Aerial Low Reference - Front Console	-	B3122 05	--	--
Keyless Entry Aerial Signal - Centre Console Rear	B3123 02	B3123 05	B3123 05	-
Keyless Entry Aerial Low Reference - Centre Console Rear	-	B3123 05	B3123 05	-
Keyless Entry Aerial Signal - Rear Compartment	B3124 02	B3124 05	B3124 05	-
Keyless Entry Aerial Low Reference - Rear Compartment	-	B3124 05	--	--

Circuit/System Description

When a transmitter authentication is requested, the front console, rear console, and rear compartment aerials simultaneously broadcast a challenge within the passenger compartment to the transmitter. If the response from the transmitter via radio frequency (RF) is a valid response, the body control module (BCM) determines there is a transmitter within the vehicle. If no response is received, the BCM determines that no transmitter is in the vehicle, and NO REMOTE DETECTED will be displayed on the DIC.

Diagnostic Aids

A low transmitter battery or radio frequency (RF) interference from aftermarket devices such as 2-way radios, power inverters, cellular phone chargers, computers, etc. may cause a system malfunction. High RF traffic areas, such as gas stations which use pay-at-the-pump RF transponders, may also cause interference that could lead to a malfunction.

Conditions caused by external influences such are these are considered to be normal. Following this diagnostic will not diagnose an RF interference condition. If RF interference is suspected, question the customer about the conditions or location where the NO REMOTE DETECTED condition occurs.

Reference Information

Schematic Reference

Remote Function Schematics

Connector End View Reference

Component Connector End Views

Description and Operation

Keyless Entry System Description and Operation

Electrical Information Reference

- Circuit Testing
- Connector Repairs
- Testing for Intermittent Conditions and Poor Connections
- Wiring Repairs

Scan Tool Reference

Control Module References for scan tool information

Circuit/System Verification

Note: This condition may be caused by low vehicle battery voltage. If the battery is not sufficiently charged (above 10 volts), the system will have difficulties detecting the fob and the NO REMOTE DETECTED message will be displayed. Correct the low battery voltage condition to eliminate this condition.

1. Verify that DTC B3119, B3120, B3121, B3122, B3123, or B3124 is not set.
   If any of the DTCs are set
   Refer to Diagnostic Trouble Code (DTC) List - Vehicle .
   If none of the DTCs are set
2. Lock the vehicle using the keyless entry transmitter.
3. Verify that each door and tailgate unlocks and opens by approaching the vehicle with a valid transmitter and operating their respective release handle/touch pad.
   If both doors and the rear compartment do not unlock/unlatch and open
   Refer to Keyless Entry System Malfunction : Passive → Active .
   If both doors and the rear compartment unlocks/unlatches and opens

4. Verify the vehicle starts with the transmitter located in the transmitter pocket.
   If the vehicle does not start
   Perform the Key with Integrated Transmitter Programming procedure.
   If the vehicle starts
5. Verify the NO REMOTE DETECTED message is not displayed on the DIC while attempting to start the vehicle, placing the keyless entry transmitter in various locations within the vehicle interior at each start attempt. The vehicle should start.
   If the NO REMOTE DETECTED message is displayed at any time
   Refer to Circuit/System Testing.
   If the NO REMOTE DETECTED message is not displayed and the vehicle starts
6. Inspect for any sources of RF interference such as mobile phone chargers, power supplies, etc. that would interrupt transmitter and aerial communication. If inspection does not reveal any items causing RF interference, discuss with the customer the conditions or location where the NO REMOTE DETECTED condition occurs. Discuss any devices that are normally kept in the vehicle, such as a laptop or mobile phone charger, which may have been removed when the vehicle was brought in for service. It may be necessary to explain to the customer how RF interference degrades the performance of the system.

Circuit/System Testing

Note: To determine the appropriate T10 keyless entry aerial to disconnect and diagnose, place the transmitter in various location within the vehicle's interior and attempt to start. The location of the transmitter when the NO REMOTE DETECTED message occurs will correspond with the T10 keyless entry aerial that requires diagnosis.

1. Vehicle OFF, disconnect the harness connector at the appropriate T10 keyless entry aerial, Vehicle in Service Mode.
2. Test for less than 1 V between the signal circuit terminal 1 and ground.
   If 1 V or greater
   2.1. Vehicle OFF, disconnect the harness connector at the K84 keyless entry control module, Vehicle in Service Mode.
   2.2. Test for less than 1 V between the signal circuit and ground.
   If 1 V or greater, repair the short to voltage on the circuit.
   If less than 1 V, replace the K84 keyless entry control module.
   If less than 1 V

Note: When using the MIN MAX function, autorange on the DMM may not function properly. To ensure accurate test results, turn off autorange and manually set the DMM range to 000.0 V.

3. Vehicle OFF, install a DMM between the signal circuit terminal 1 and ground. Set the DMM to capture DC voltage using the MIN MAX function.
4. Lock the vehicle doors using the keyless entry transmitter. Activate the aerial by pressing the ignition mode switch.
5. Verify the MAX voltage captured by the DMM is greater than 1 V.
   If 1 V or less
   5.1. Vehicle OFF, disconnect the harness connector at the K84 keyless entry control module.
   5.2. Test for infinite resistance between the signal circuit and ground.
   If less than infinite resistance, repair the short to ground on the circuit.
   If infinite resistance

5.3. Test for less than 2 Ω in the signal circuit end to end.
If 2 Ω or greater, repair the open/high resistance in the circuit.
If less than 2 Ω, replace the K84 keyless entry control module.

If greater than 1V

6. Test for less than 1 V between the low reference circuit terminal 2 and ground.

If 1 V or greater

6.1. Vehicle OFF, disconnect the harness connector at the K84 keyless entry control module, Vehicle in Service Mode.
6.2. Test for less than 1 V between the low reference circuit and ground.
If 1 V or greater, repair the short to voltage on the circuit.
If less than 1 V, replace the K84 keyless entry control module.

If less than 1 V

Note: When using the MIN MAX function, autorange on the DMM may not function properly. To ensure accurate test results, turn off autorange and manually set the DMM range to 000.0 V.

7. Install a DMM between the signal circuit terminal 1 and the low reference circuit terminal 2. Set the DMM to capture DC voltage using the MIN MAX function.
8. Lock the vehicle doors using the keyless entry transmitter. Activate the aerial by pressing the ignition mode switch.
9. Verify the MAX voltage captured by the DMM is greater than 1 V.

If 1 V or less

9.1. Vehicle OFF, disconnect the harness connector at the K84 keyless entry control module.
9.2. Test for less than 2 Ω in the low reference circuit end to end.
If 2 Ω or greater, repair the open/high resistance in the circuit.
If less than 2 Ω, replace the K84 keyless entry control module.

If greater than 1V

10. Replace the appropriate T10 keyless entry aerial.
11. Lock the vehicle doors using the keyless entry transmitter. Activate the aerial by pressing the ignition mode switch.
12. Verify the NO REMOTE DETECTED message is not displayed and the vehicle starts.

If the NO REMOTE DETECTED message is displayed and the vehicle does not start

Replace the K84 keyless entry control module.

If the NO REMOTE DETECTED message is not displayed and the vehicle starts

13. All OK.

Repair Instructions

Perform the Diagnostic Repair Verification after completing the diagnostic procedure.

- Ignition Lock Key Transmitter Aerial Replacement - Instrument Panel
- Ignition Lock Key Transmitter Aerial Replacement - Floor Console : Rear → Front
- Control Module References for keyless entry control module replacement, setup, and programming

&#169© Copyright Chevrolet. All rights reserved

Keyless Entry System Malfunction - Active

Diagnostic Instructions

- Perform the Diagnostic System Check - Vehicle prior to using this diagnostic procedure.
- Review Strategy Based Diagnosis for an overview of the diagnostic approach.
- Diagnostic Procedure Instructions provides an overview of each diagnostic category.

Circuit/System Description

The keyless entry will unlock the vehicle doors or open the rear compartment when a corresponding button on the keyless entry transmitter is pressed. This is accomplished by the keyless entry transmitter sending a radio frequency to the remote control door lock receiver, which then sends the signal to the body control module (BCM). The BCM interprets the signal and activates the requested function. A low transmitter battery or radio frequency (RF) interference from aftermarket devices such as 2-way radios, power inverters, cellular phone chargers, computers, etc. may cause a system malfunction. High RF traffic areas, such as gas stations which use pay-at-the-pump RF transponders, may also cause interference that could lead to a malfunction.

Reference Information

Schematic Reference

Remote Function Schematics

Connector End View Reference

Component Connector End Views

Description and Operation

Keyless Entry System Description and Operation

Electrical Information Reference

- Circuit Testing

- Connector Repairs
- Testing for Intermittent Conditions and Poor Connections
- Wiring Repairs

Scan Tool Reference

Control Module References for scan tool information

Circuit/System Testing

1. Verify that the transmitter is a correct transmitter for the vehicle. This can be accomplished by comparing the part number printed on the transmitter to the appropriate part number in the parts catalogue.
   If the transmitter is incorrect
   Replace the transmitter.
   If the transmitter is correct
2. Operate the transmitter while observing the appropriate scan tool Key Fob Function parameter for the appropriate transmitter.
3. Verify the scan tool Key Fob Function parameter corresponds with the function selected on the transmitter.
   If the Key Fob Function parameter does not correspond with the transmitter selection
   3.1. Replace the transmitter.
   3.2. Operate the transmitter while observing the appropriate scan tool Key Fob Function parameter for the appropriate transmitter.
   3.3. Verify the scan tool Key Fob Function parameter correspond with the function selected on the transmitter.
   If the Key Fob Function parameter does not correspond with the transmitter selection, replace the K9 BCM
   If the Key Fob Function parameter corresponds with the transmitter selection
   3.4. All OK.
   If the Key Fob Function parameter corresponds with the transmitter selection
4. All OK.

Repair Instructions

Perform the Diagnostic Repair Verification after completing the diagnostic procedure.

- Key with Integrated Transmitter Programming
- Control Module References for BCM replacement, setup, and programming

© Copyright Chevrolet. All rights reserved

Keyless Entry System Malfunction - Passive

Diagnostic Instructions

- Perform the Diagnostic System Check - Vehicle prior to using this diagnostic procedure.
- Review Strategy Based Diagnosis for an overview of the diagnostic approach.
- Diagnostic Procedure Instructions provides an overview of each diagnostic category.

Circuit/System Description

The keyless entry aerials are used as short range low frequency transmitters. As a vehicle with locked doors is approached with a keyless entry transmitter and the exterior door handle is pulled, the keyless entry aerial broadcasts a challenge to the transmitter in an approximate 1 metre range. If the response from the transmitter via radio frequency (RF) is valid, the locked door will be passively unlocked/unlatched and allow the door to be opened. The front doors will open with one pull of the front door handle. A low transmitter battery or radio frequency (RF) interference from aftermarket devices such as 2-way radios, power inverters, cellular phone chargers, computers, etc. may cause a system malfunction. High RF traffic areas, such as gas stations which use pay-at-the-pump RF transponders, may also cause interference that could lead to a malfunction.

Reference Information

Schematic Reference

Remote Function Schematics

Connector End View Reference

Component Connector End Views

Description and Operation

Keyless Entry System Description and Operation

Electrical Information Reference

- Circuit Testing
- Connector Repairs
- Testing for Intermittent Conditions and Poor Connections
- Wiring Repairs

Scan Tool Reference

Control Module References for scan tool information

Circuit/System Verification

1. Vehicle in Service Mode.
2. Verify that DTC B3119, B3120, or B3121 is not set.
   If any of the DTCs are set
   Refer to Diagnostic Trouble Code (DTC) List - Vehicle .
   If none of the DTCs are set
3. Verify that the transmitter is a correct transmitter for the vehicle. This can be accomplished by comparing the part number printed on the transmitter to the appropriate part number in the parts catalogue.
   If the transmitter is incorrect
   Replace the transmitter.
   If the transmitter is correct
4. Verify the scan tool Exterior Driver Door Handle Switch, Exterior Passenger Door Handle Switch, and Boot Lid Exterior Unlatch Switch parameters change between Active and Inactive while operating their respective release handle/touch pad.
   If any of the parameters does change
   Refer to Exterior Door Handle Switch Malfunction - DTC B1474, B1534, B1535, or B3849 .
   If all of the parameters change
5. Lock the vehicle using the keyless entry transmitter.
6. Verify that each door and rear compartment unlocks and opens by approaching the vehicle with a valid transmitter and operating their respective release handle/touch pad.
   If both doors and the rear compartment do not unlock/unlatch and open
   Refer to Passive Transmitter Malfunction.
   If only one door or the rear compartment does not unlock/unlatch and open
   Refer to Aerial Circuit Malfunction.
   If both doors and the rear compartment unlocks/unlatches and opens
7. All OK.

Circuit/System Testing

Passive Transmitter Malfunction

1. Lock the vehicle using the keyless entry transmitter.
2. Verify that each door and rear compartment unlocks and opens by approaching the vehicle with a valid transmitter and operating their respective release handle/touch pad.

   If both doors and the rear compartment do not unlock/unlatch and open

   2.1. Replace the transmitter battery.
   2.2. Lock the vehicle using the keyless entry transmitter.
   2.3. Verify that each door and rear compartment unlocks and opens by approaching the vehicle with a valid transmitter and operating their respective release handle/touch pad.
   If both doors and the rear compartment do not unlock/unlatch and open, replace the transmitter.
   If both doors and the rear compartment unlock/unlatch and open
   2.4. All OK.

   If both doors and the rear compartment unlock/unlatch and open
3. The concern may be caused by temporary RF interference. Discuss the conditions in which the concern occurs with the customer. RF interference from aftermarket devices such as 2-way radios, power inverters, mobile phone chargers, computers, etc. may cause a system malfunction. High RF traffic areas, such as gas stations which use pay-at-the-pump RF transponders, may also cause interference that could lead to a malfunction.

Aerial Circuit Malfunction

Note: The A24 exterior door handle assembly has two harness connectors. Of these two harness connectors, make sure that only the T10 door handle keyless entry aerial harness connector is disconnected. Disconnecting both harness connectors will result in the inability to activate the aerial and cause an improper diagnosis.

1. Vehicle OFF, disconnect the harness connector at the inoperative T10 keyless entry aerial, Vehicle in Service Mode.
2. Test for less than 1 V between the signal circuit terminal 1 and ground.

   If 1 V or greater

   2.1. Vehicle OFF, disconnect the harness connector at the K84 keyless entry control module, Vehicle in Service Mode.
   2.2. Test for less than 1 V between the signal circuit and ground.
   If 1 V or greater, repair the short to voltage on the circuit.
   If less than 1 V, replace the K84 keyless entry control module.

   If less than 1 V

   Note: When using the MIN MAX function, autorange on the DMM may not function properly. To ensure accurate test results, turn off autorange and manually set the DMM range to 000.0 V.
3. Vehicle OFF, install a DMM between the signal circuit terminal 1 and ground. Set the DMM to capture DC voltage using the MIN MAX function.
4. Lock the vehicle doors using the keyless entry transmitter. Activate the aerial by operating the appropriate release handle/touch pad.
5. Verify the MAX voltage captured by the DMM is greater than 1 V.

   If 1 V or less

5.1. Vehicle OFF, disconnect the harness connector at the K84 keyless entry control module.
5.2. Test for infinite resistance between the signal circuit and ground.
If less than infinite resistance, repair the short to ground on the circuit.
If infinite resistance
5.3. Test for less than 2 Ω in the signal circuit end to end.
If 2 Ω or greater, repair the open/high resistance in the circuit.
If less than 2 Ω, replace the K84 keyless entry control module.

If greater than 1 V

6. Test for less than 1 V between the low reference circuit terminal 2 and ground.

If 1 V or greater

6.1. Vehicle OFF, disconnect the harness connector at the K84 keyless entry control module, Vehicle in Service Mode.
6.2. Test for less than 1 V between the low reference circuit and ground.
If 1 V or greater, repair the short to voltage on the circuit.
If less than 1 V, replace the K84 keyless entry control module.

If less than 1 V

Note: When using the MIN MAX function, autorange on the DMM may not function properly. To ensure accurate test results, turn off autorange and manually set the DMM range to 000.0 V.

7. Install a DMM between the signal circuit terminal 1 and the low reference circuit terminal 2. Set the DMM to capture DC voltage using the MIN MAX function.
8. Lock the vehicle doors using the keyless entry transmitter. Activate the aerial by operating the appropriate release handle/touch pad.
9. Verify the MAX voltage captured by the DMM is greater than 1 V.

If 1 V or less

9.1. Vehicle OFF, disconnect the harness connector at the K84 keyless entry control module.
9.2. Test for less than 2 Ω in the low reference circuit end to end.
If 2 Ω or greater, repair the open/high resistance in the circuit.
If less than 2 Ω, replace the K84 keyless entry control module.

If greater than 1V

10. Replace the appropriate T10 keyless entry aerial.
11. Lock the vehicle doors using the keyless entry transmitter. Activate the aerial by operating the appropriate release handle/touch pad.
12. Verify that the door/rear compartment unlocks and opens when the release handle/touch pad is operated.

If the door/rear compartment does not unlock and open

Replace the K84 keyless entry control module.

If the door/rear compartment unlocks and opens

13. All OK.

Repair Instructions

Perform the Diagnostic Repair Verification after completing the diagnostic procedure.

- Front Side Door Outside Handle Bracket Replacement
- Control Module References for keyless entry control module replacement, setup, and programming

© Copyright Chevrolet. All rights reserved

Remote Vehicle Start Malfunction

Diagnostic Instructions

- Perform the Diagnostic System Check - Vehicle prior to using this diagnostic procedure.
- Review Strategy Based Diagnosis for an overview of each diagnostic approach.
- Diagnostic Procedure Instructions provides an overview of each diagnostic category.

Circuit/System Description

Remote start begins as a radio frequency message received by the body control module (BCM) from a keyless entry transmitter. The BCM monitors system conditions such as content theft deterrent, bonnet ajar status, and body DTCs to determine if a remote start event will occur. If conditions are determined to be acceptable, the remote start message is sent to the engine control module (ECM). The ECM monitors system conditions such as engine control parameters and the immobiliser system to determine if engine starting will be allowed. If conditions are acceptable, the ECM will activate the appropriate vehicle systems.

Diagnostic Aids

- A remote start event will not always start the vehicle engine. If the high voltage battery state of charge is sufficient to operate the vehicle systems or the vehicle is plugged in, the engine will not start.
- If the vehicle has a current vehicle DTC that illuminates the malfunction indicator lamp, the cause of the DTC must be diagnosed before proceeding with the remote start malfunction diagnostic.

Reference Information

Schematic Reference

Remote Function Schematics

Connector End View Reference

Component Connector End Views

Description and Operation

Keyless Entry System Description and Operation

Electrical Information Reference

- Circuit Testing
- Connector Repairs
- Testing for Intermittent Conditions and Poor Connections
- Wiring Repairs

Scan Tool Reference

Control Module References for scan tool information

Circuit/System Verification

1. Verify that remote vehicle start is enabled through vehicle personalisation.
   If remote vehicle start is not enabled through vehicle personalisation
   Use vehicle personalisation to turn on remote vehicle start functionality. Refer to the vehicle owners manual.
   If remote vehicle start is enabled
2. Verify that the keyless entry functions operate with all available keyless entry transmitters.
   If the keyless entry functions do not operate properly
   Refer to Keyless Entry System Malfunction : Passive → Active .
   If the keyless entry functions operate properly
3. Verify none of the following conditions exist on the vehicle:
   - A current vehicle DTC that illuminates the malfunction indicator lamp (MIL)
   - The vehicle is in valet mode.
   - More than 2 remote starts have been attempted.
   - The hazard switch is in the ON position.
   - A current hazard switch DTC is set.
   - The vehicle bonnet is ajar.
   - A current bonnet ajar DTC is set.
   - The content theft deterrent system detects an alarm trigger.
   - Excessive engine RPM
   - Excessive coolant temperature
   - Accelerator pedal position greater than 0 percent

- Vehicle not in park
- Vehicle theft deterrent malfunction
- A current automatic transmission shift lock control system DTC is set.
- A vehicle speed sensor signal is detected by the ECM.

If any of the conditions are present

Refer to the appropriate subsection in which the failure occurred.

If none of the conditions are present

4. All OK.

&#169© Copyright Chevrolet. All rights reserved

Ignition Lock Key Transmitter Aerial Replacement - Instrument Panel

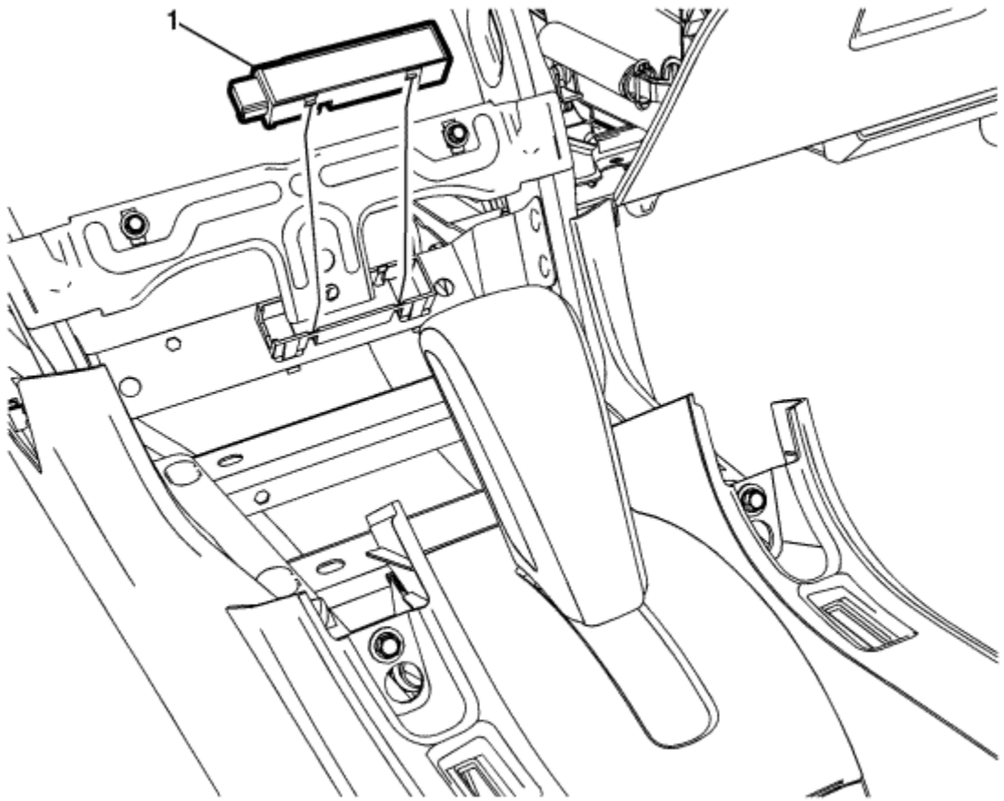

Callout	Component Name
Preliminary Procedure Remove the instrument panel lower inner trim pad. Refer to Lower Trim Pad Retainer Replacement : Outer → Inner	
	Ignition Lock Key Transmitter Aerial Assembly

1	**Procedure** 1. Disconnect the electrical connector. 2. Using the appropriate tool, depress tabs and unsnap aerial from bracket.

© Copyright Chevrolet. All rights reserved

Ignition Lock Key Transmitter Aerial Replacement - Floor Console - Front

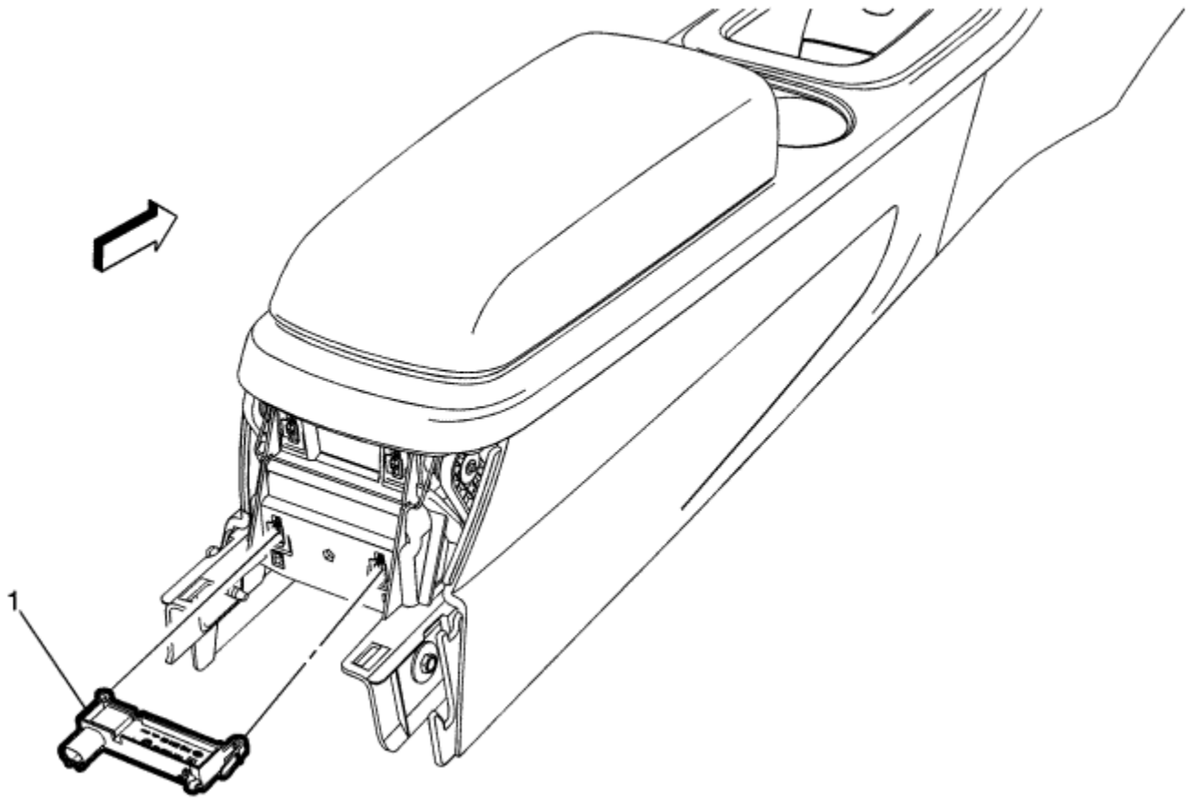

Callout	Component Name
Preliminary Procedure Remove the front floor console rear cover. Refer to Front Floor Console Rear Cover Replacement	
	Ignition Lock Key Transmitter Aerial Assembly

1	**Procedure** 1. Disconnect the electrical connector. 2. Unsnap aerial from the floor console.

© Copyright Chevrolet. All rights reserved

Ignition Lock Key Transmitter Aerial Replacement - Floor Console - Rear

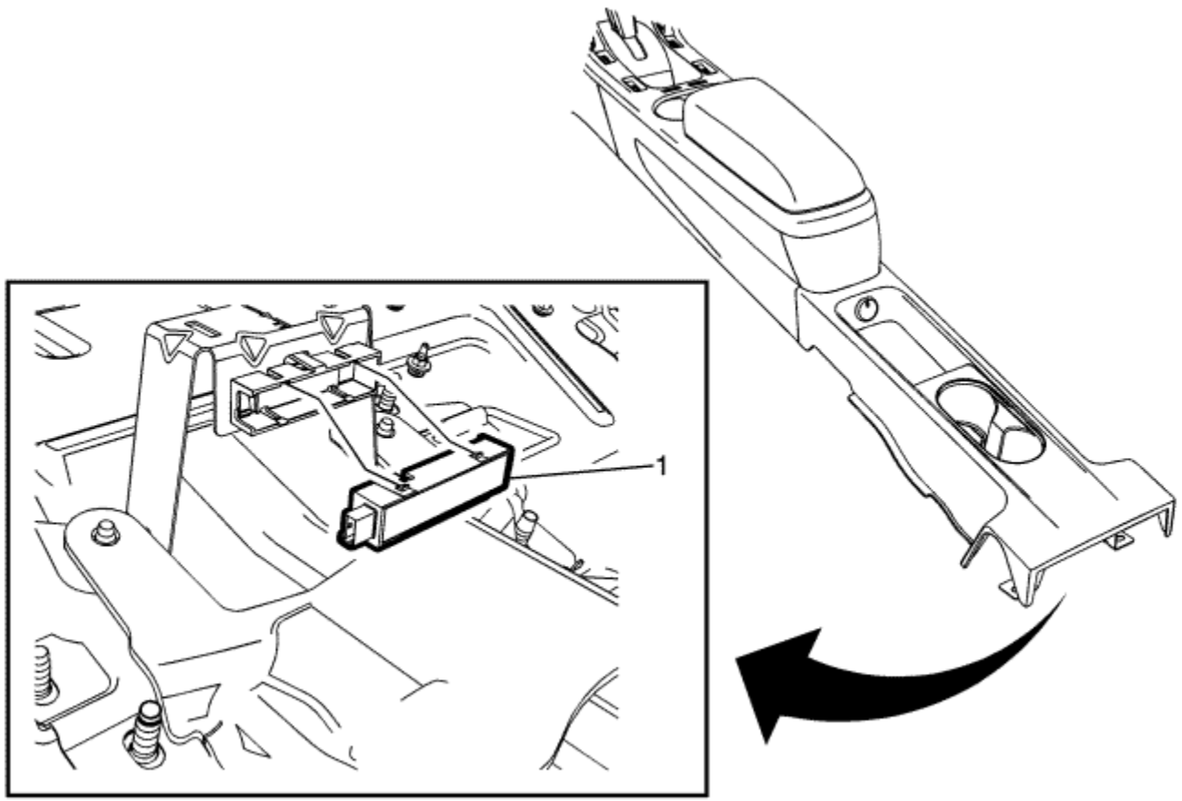

Callout	Component Name
Preliminary Procedure Remove the front floor rear console. Refer to Front Floor Rear Console Replacement	
	Ignition Lock Key Transmitter Aerial Assembly

1	**Procedure** 1. Disconnect the electrical connector. 2. Using the appropriate tool, unsnap tabs on the aerial from the bracket.

© Copyright Chevrolet. All rights reserved

Keyless Entry Control Module Replacement

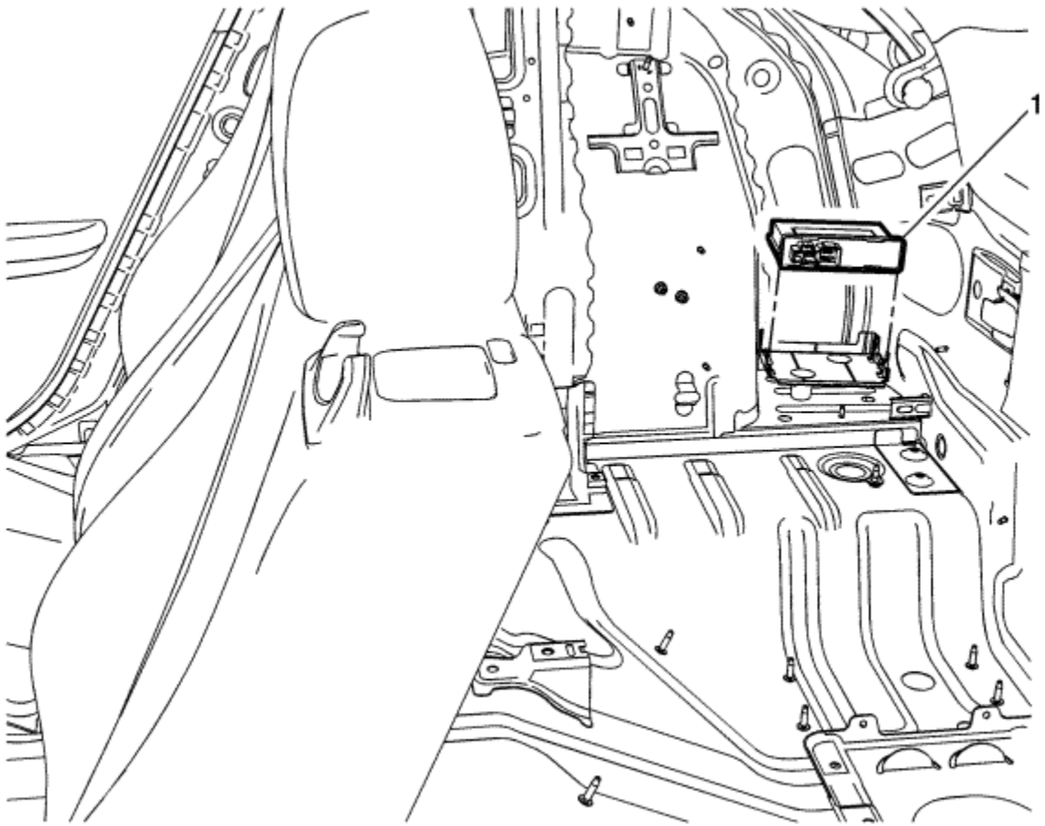

Callout	Component Name
Preliminary Procedure 1. Disconnect the battery negative cable. Refer to Battery Negative Cable Disconnection and Connection . 2. Remove the right side quarter inner trim panel. Refer to Quarter Inner Trim Finish Panel Replacement .	

1	Keyless Entry Control Module **Procedure** 1. Disconnect the electrical connectors. 2. Unsnap the receiver from the bracket. 3. For programming and set up, refer to Control Module References .

© Copyright Chevrolet. All rights reserved

Remote Control Door Lock Receiver Replacement

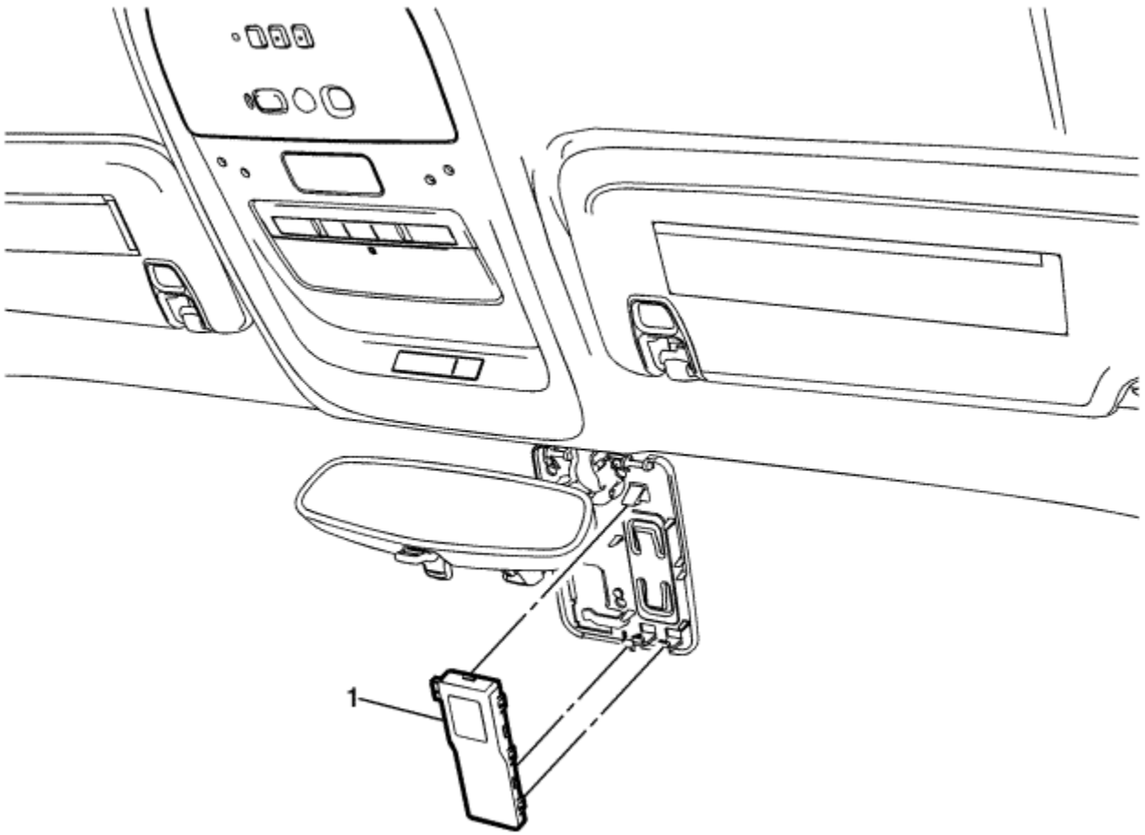

Callout	Component Name
Preliminary Procedure Remove the inside rear view mirror mount plate cover. Refer to Inside Rearview Mirror Mount Plate Cover Replacement	
	Remote Control Door Lock Receiver

1	**Procedure** 1. Disconnect the electrical connector. 2. Unsnap the receiver from the windscreen bracket. 3. For programming and set up, refer to Control Module References

© Copyright Chevrolet. All rights reserved

Garage Door Opener Transmitter Replacement

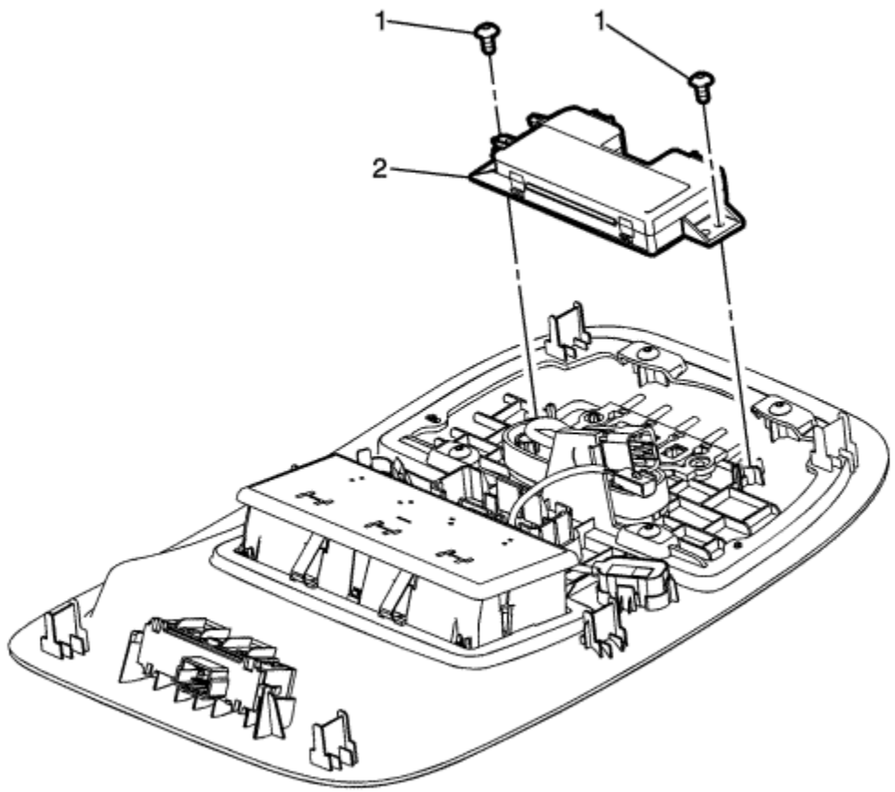

Callout	Component Name
Preliminary Procedure Remove the roof console. Refer to Roof Console Replacement .	
1	Garage Door Opener Transmitter Bolts (Qty: 2)

	Caution: Refer to Fastener Caution in the Preface section.
2	Garage Door Opener Transmitter **Procedure** 1. Disconnect the electrical connectors. 2. Refer to Control Module References for programming and set-up procedures.

© Copyright Chevrolet. All rights reserved

Garage Door Opener Transmitter Pushbutton Replacement

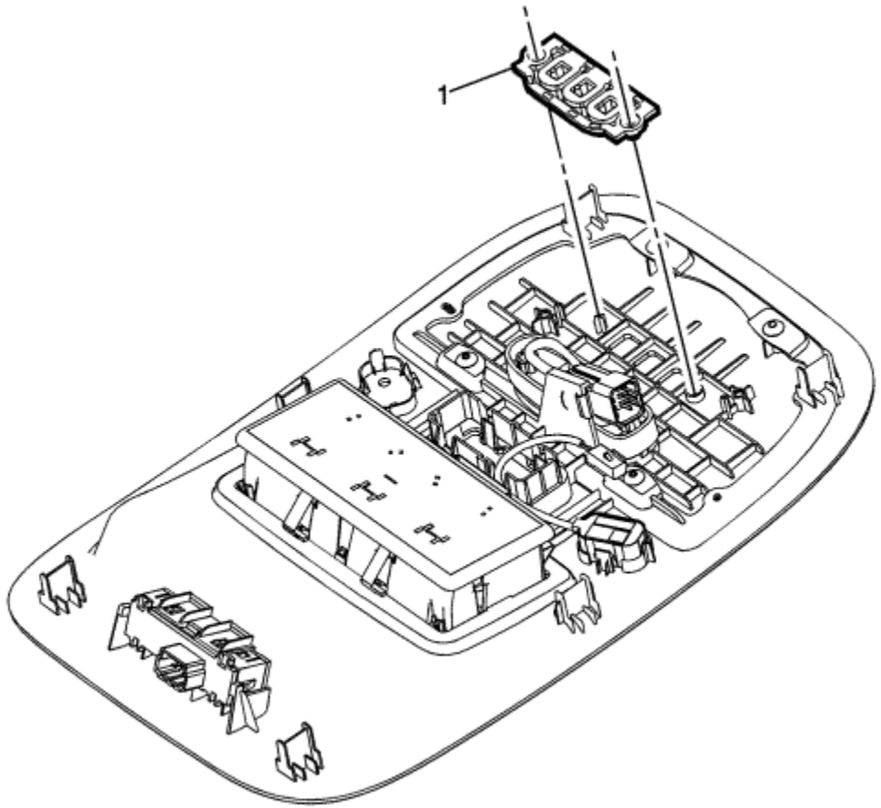

Callout	Component Name
Preliminary Procedure Remove the garage door opener transmitter. Refer to Garage Door Opener Transmitter Replacement .	
1	Garage Door Opener Transmitter Pushbutton

© Copyright Chevrolet. All rights reserved

Keyless Entry System Description and Operation

Keyless Entry System Description and Operation - Active

The keyless entry system is a vehicle entry device. The keyless entry system is used in conjunction with the door locks to unlock the vehicle. Keyless entry will lock/unlock the vehicle doors or open the rear compartment lid when a corresponding button on the keyless entry transmitter is pressed. This is accomplished by the transmitter sending a radio frequency to the remote control door lock receiver aerial that has a direct link to the body control module (BCM). The BCM interprets the signal and activates the requested function or request the appropriate control module to activate the function via a serial data message. A low transmitter battery or radio frequency interference from aftermarket devices, such as 2-way radios, power inverters, computers, etc., may cause a system malfunction. High radio frequency traffic areas, such as gas stations that use pay-at-the-pump radio frequency transponders, may also cause interference that could lead to a malfunction. Keyless entry allows you to operate the following features:

- Door lock/unlock
- Remote start
- Charge port door release
- Illuminated entry lamps
- Panic alarm/Vehicle locator
- Remote vehicle start

Keyless Entry System Description and Operation - Passive

Passive keyless entry allows entry to a locked vehicle without pressing any buttons on the keyless entry transmitter. You must only have the transmitter with you. The passive entry system use low frequency aerials in several different areas on the vehicle to determine the location of the transmitter. When passively opening a locked door or the rear compartment, you must have a programmed transmitter with you in your pocket, purse, or briefcase.

When a door handle is pulled or the rear compartment touch pad is pressed, the low frequency aerial sends out a challenge to the keyless entry transmitter. Because of the low frequency, communication range is limited. The aerial will emit the challenged in a one metre range. The transmitter must be within this range to receive the challenge. The transmitter receives this challenge and emits it's response as an RF message, which is received by the remote control door lock receiver. If the response is correct, the door or rear compartment will unlock and open.

As a customer convenience feature, the keyless entry system will notify the driver if the transmitter has been left in the vehicle after exiting by chirping the vehicle horn three times. This may be turned off using vehicle personalisation. Also, if the transmitter is left in the vehicle after the central door lock switch has been used to lock the vehicle, the driver door will remain unlock after exiting the vehicle. This is intended to prevent locking the transmitter in the vehicle and being unable to access it.

Keyless Entry System Description and Operation - Keyless Start

The keyless start portion of the keyless entry system allows vehicle starting, having only the transmitter as your key. The keyless start system uses low frequency aerials in three different locations on the vehicle to determine the location of the transmitter. Multiple aerials are used to ensure complete coverage of the vehicle interior and rear compartment. When using the keyless start system, a programmed transmitter must be in the vehicle's interior, such as the driver's pocket, purse, or briefcase.

When the ignition mode switch is pressed, the low frequency aerials emit a challenge to the keyless entry transmitter. The transmitter receives this challenge and emits it's response as an RF message, which is received by the remote control door lock receiver. If the response is correct, vehicle starting will be allowed. If RF communication is interrupted, a "No Remote Detected" message will be displayed on the DIC. In these cases, the extended transmitter key blade can be placed in the transmitter slot located in the upper instrument panel storage compartment, under the rubber mat. The immobiliser aerial coil is located directly beneath the transmitter slot. Placing the extended key blade in the slot will create a low powered coupling between the transmitter and immobiliser aerial, allowing communications to occur and enabling vehicle starting.

The keyless entry system has the following components:

- Vehicle key with integrated keyless entry transmitter
- Driver and front Passenger door aerials (part of the door handle assembly)
- Driver and front Passenger door lock sensors (part of the door handle assembly)
- Rear fascia aerial
- Front instrument panel console aerial
- Centre console aerial
- Rear compartment aerial
- Body Control Module (BCM)
- Keyless entry control module
- Immobiliser aerial coil
- Remote control door lock receiver

Keyless Entry Transmitters

The keyless entry transmitters are used to lock and unlock the vehicle door while away from the immediate are of the vehicle. Vehicles without remote start will operate at a distance of up to 20 m (65 ft) away. Vehicles with remote start will operate at a distance of up to 60 m (195 ft) away. The keyless entry transmitter is an integral part of the vehicle key.

Door Aerial

The keyless entry door aerials are used to transmit low frequency communications to the keyless entry transmitters.

The keyless entry door aerials are located in the left front and right front exterior door handle bracket. The aerials are serviced as part of the door handle assembly. The aerials are controlled by the keyless entry control module. When the exterior door handle is operated, the respective aerial will send out a challenge to the keyless entry transmitter, which begins the passive entry communications.

Rear Fascia Aerial

The rear fascia aerial is used to transmit low frequency communication to the keyless entry transmitters for entry to rear compartment.

The rear fascia aerial is located behind the rear fascia. The aerial is controlled by the keyless entry control module. When the rear compartment touch pad is pressed, the aerial sends out a challenge to the keyless entry transmitter, which begins the passive entry communications.

Front Console Passive (Instrument Panel) Aerial

This aerial is located in the lower instrument panel near the front of the centre console.

The front console aerial is used for vehicle starting functions. When the ignition mode switch is pressed, the aerial is energised or "pinged". This emits a low frequency challenge signal that is received by the keyless entry transmitter. The transmitter will then reply to this challenge with a response and, if correct, vehicle starting will occur.

Centre Console Aerial

This aerial is located in the rear of the centre console.

The rear console aerial is used for vehicle starting functions. When the ignition mode switch is pressed, the aerial is energised or "pinged". This emits a low frequency challenge signal that is received by the keyless entry transmitter. The transmitter will then reply to this challenge with a response and, if correct, vehicle starting will occur.

Rear Compartment Aerial

This aerial is located in the centre of the rear compartment metal floor pan, near the seatback.

The rear compartment aerial is used for vehicle starting functions. When the ignition mode switch is pressed, the aerial is energised or "pinged". This emits a low frequency challenge signal that is received by the keyless entry transmitter. The transmitter will then reply to this challenge with a response and, if correct, vehicle starting will occur.

Remote Control Door Lock Receiver

The remote control door lock receiver is located on the vehicle windscreen, directly in front of the inside rearview mirror.

The remote control door lock receiver is control by and directly communicates with the body control module (BCM). When the transmitter receives a low frequency challenge from an aerial, it responds with an RF message. This RF message is received by the remote control door lock receiver and communicated to the BCM. If the RF message is a valid response to the low frequency challenge, vehicle access or starting will be allowed.

Immobiliser Aerial Coil Assembly

The keyless entry immobiliser coil assembly is located in the upper instrument panel, directly beneath the upper instrument panel storage compartment. If the transmitter battery is dead, weak, or the RF signal is being interrupted, the extended transmitter key blade can be placed in the transmitter slot located in the upper instrument panel storage compartment, under the rubber mat, to create a low powered coupling between the transmitter and immobiliser aerial, allowing communications to occur and enabling vehicle starting.

The immobiliser aerial coil is controlled by the BCM. The immobiliser control module is also active when learning vehicle keys.

Keyless Entry Control Module

The keyless entry control module is a multi-function module which performs the following keyless entry system functions:

- Activating vehicle aerials for passive keyless entry functions
- Activating vehicle aerials for keyless start functions
- Backup control for the ECM accessory wakeup and the run/crank relay
- If equipped, controls the electronic steering column lock
- Receiver of the door handle switch inputs and the lock sensor inputs and door open switch (not the door ajar switch)
- Control the door unlatch motors
- Ignition mode switch monitoring

Body Control Module (BCM)

The BCM is a multi-function module that performs the following functions:

- Receive and authenticate active transmitter and keyless start signals from the remote control door lock receiver
- Determines the functionality requested by the transmitter signal
- Performs the function requested by the transmitter signal

Unlock Driver Door Only - Active

Momentarily press the transmitter UNLOCK button to perform the following functions:

- Unlock only the driver door
- Illuminate the interior lamps for a determined length of time or until the ignition mode switch is pressed
- Flash the exterior lights, if enable through personalisation
- Disarm the content theft deterrent system
- Deactivate the content theft deterrent system when in the alarm mode

Unlock All Doors - Second Operation - Active

Momentarily press the transmitter UNLOCK button a second time, within 5 seconds of the first press, to perform the following function:

Unlock the remaining doors and rear compartment

Unlock Driver Door Only - Passive

If enabled through personalisation, approach the driver door with a valid keyless entry transmitter and touch the lock sensor on the front door handle to perform the following functions:

- Unlock and open only the driver door when door handle is operated
- Disarm the content theft deterrent system, if equipped
- Deactivate the content theft deterrent system when in the alarm mode

Unlock All Doors - Passive

Approach any non driver door (front or rear) or, if enabled through personalisation, the driver door with a valid keyless entry transmitter and touch the lock sensor on the front door handle to perform the following functions:

- Unlock all vehicle doors and rear compartment
- Disarm the content theft deterrent system, if equipped
- Deactivate the content theft deterrent system when in the alarm mode

Lock All Doors - Active

Press the transmitter LOCK button to perform the following functions:

- Lock all vehicle doors
- Immediately turn off the interior lamps
- Flash the exterior lights, if enabled through personalisation
- Chirp the horn, if enabled through personalisation
- Arm the content theft deterrent system

Lock All Doors - Passive

Exit the vehicle (with vehicle off) with the keyless entry transmitter to automatically perform the following functions, if equipped.

- Lock all vehicle doors and rear compartment after a delay
- Flash the exterior lights, if enabled through personalisation
- Chirp horn, if enabled through personalisation
- Arm the content theft deterrent system

When all doors are closed, they can also be locked from the exterior by touching the lock sensor on the outside of a front door handle while having a valid transmitter in range. This function is only active for several minutes after all doors are closed to save battery life.

If more than one keyless entry transmitter is within a vehicle and the keyless entry system detects that one or more transmitters have been left in the vehicle after vehicle is locked, any transmitter left within the vehicle will be temporarily deactivated until:

- A button on the deactivated transmitter is pressed (will only activate the transmitter whose button is pressed)
- A passive unlock of vehicle occurs
- Change in power mode occurs

Rear Compartment Release - Passive

Approach the rear of the vehicle with a valid keyless entry transmitter. Press the boot release touch pad. The boot will open.

Vehicle Locator/Panic Alarm/Active

A single press of the panic button performs the following functions. Some functions may be dependent on personalization settings:

- Pulses the horn three times
- Flashes the exterior lamps three times

A press and hold of the panic button performs the following functions:

- A press and hold of the panic button performs the following functions:
- Pulses the horn and flashes the parking lamps for 30 second or until the following conditions occur:
  - The panic button is pressed
  - The ignition mode switch is pressed with a valid key in the vehicle

Remote Start

The remote start function allows an operator to pre-condition the vehicle interior prior to entering the vehicle. Remote start will allow the HVAC system and other vehicle systems to enable, providing a comfortable vehicle upon entry. Remote start functions have an operating range of up to 195 feet, depending on conditions. The remote start sequence begins by pressing and releasing the lock button and then pressing and holding the remote start buttons on the keyless entry transmitter. The turn signal lamps will illuminate to indicate the vehicle has received the remote start request. Each time a remote start is performed, the vehicle doors are locked, however they may then be unlocked/locked with the transmitter or vehicle key at any time. Once activated, the HVAC and vehicle systems are allowed to operate for 10 minutes. The remote start time may be extended by an additional 10 minute by again pressing and releasing the lock button and then pressing and holding the remote start buttons on the transmitter. This feature is called a remote start continue and allows a maximum of 20 minutes of system operation. If the remote start continue is performed at 7 minutes into the initial 10 minute time-out, a total of 17 minutes of systems operation would occur. The remote start event may be suspended at any time by pressing only the remote start button on the transmitter or by entering the vehicle and turning ON the hazard lamps.

In between ignition cycles, only two remote start events may occur or be attempted. Once two events or attempts have been made, future remote start events will be suspended until the vehicle is operated using the ignition mode switch.

Enable/Disable Remote Start

Using the driver information centre, remote start may be enabled or disabled as a part of vehicle personalisation. Refer to the vehicle owners manual for more information.

Remote Start System Disabled

If any of the conditions listed below occur, a remote start event may be aborted or cancelled:

- Vehicle is in valet mode
- Vehicle doors are ajar
- Rear compartment lid is ajar
- The bonnet is open
- The doors are not locked
- The hazard switch is ON
- Vehicle power mode is incorrect
- Vehicle speed is greater than 0
- Transmission is not in P
- Excessive engine coolant temperature
- Low oil pressure
- The malfunction indicator lamp (MIL) is commanded ON
- Engine crank time is greater than 30 seconds
- Excessive engine speed
- Accelerator pedal position too high
- Remote start timer equals 0
- Immobiliser system indicates a theft attempt
- Vehicle propulsion system fault conditions
- High voltage battery fault conditions

Keyless Entry Personalisation

Vehicle lock/unlock functions and remote start settings may be personalised for the vehicle. For functional descriptions and programming instructions, refer to the vehicle owners manual.

Replace Battery in Remote Key Message

A REPLACE BATTERY IN REMOTE KEY message may be seen on the driver information centre when the transmitter's battery voltage has been lower than 2.16 volts for three consecutive ignition cycles.

&#169© Copyright Chevrolet. All rights reserved

Seat Belt Schematics

Seat Belts

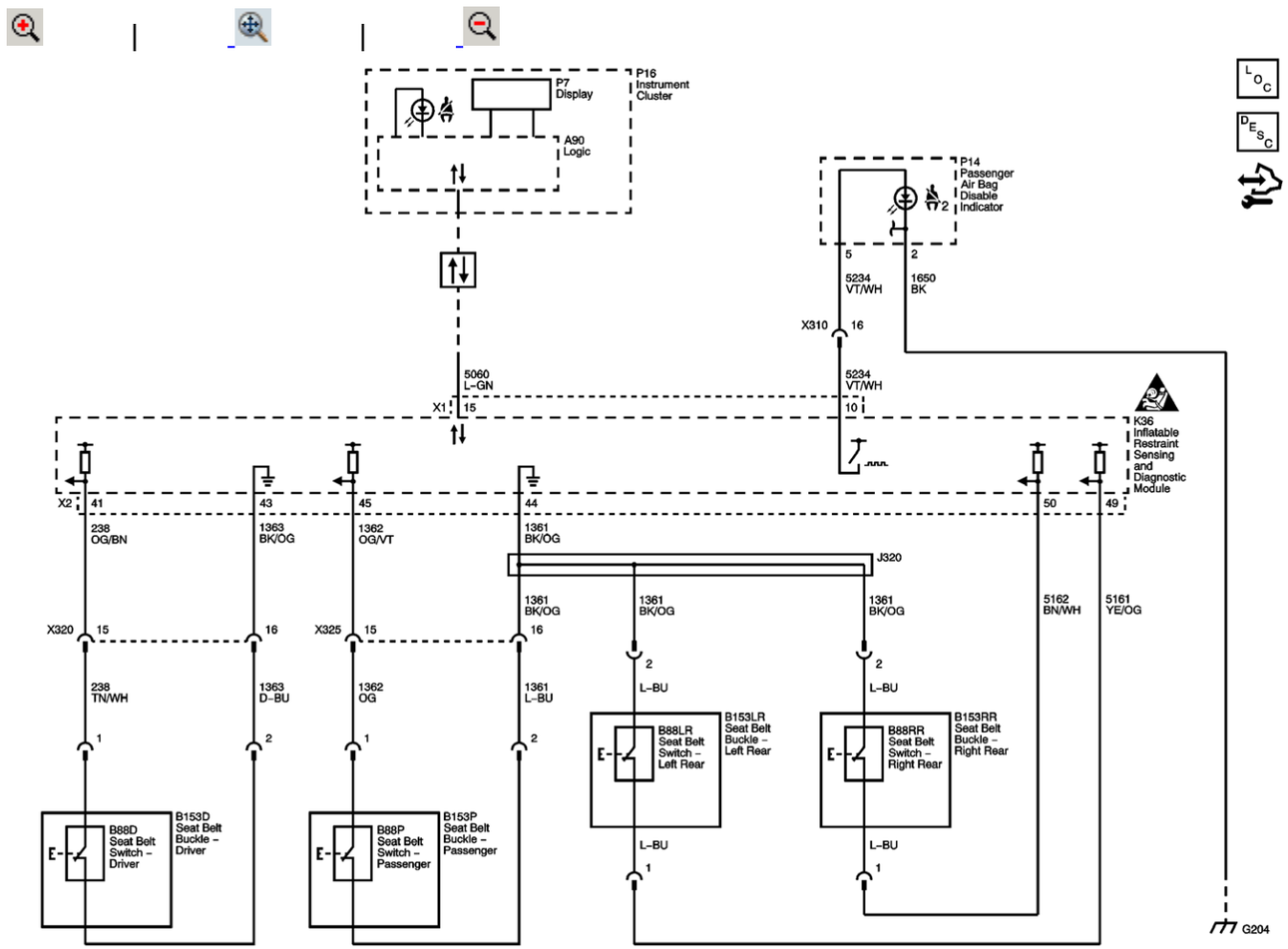

Master Electrical Component List

Seat Belt System Description and Operation

Data Communication Schematics

Master Electrical Schematic Icons

G204

© Copyright Chevrolet. All rights reserved

Symptoms - Seat Belts

Note: Review the seat belt system description and operation in order to familiarise yourself with the system and how it functions. Refer to Seat Belt System Description and Operation .

Visual/Physical Inspection

- Inspect for aftermarket devices which could affect the operation of the seat belt system. Refer to Checking Aftermarket Accessories .
- Inspect the easily accessible or visible system components for obvious damage or conditions which could cause the symptom.

Intermittent

Faulty electrical connections or wiring may be the cause of intermittent conditions. Refer to Testing for Intermittent Conditions and Poor Connections .

Symptom List

Refer to the following symptom diagnostic procedure in order to diagnose the symptom:

- Seat Belt Indicator Circuit Malfunction - Driver
- Seat Belt Indicator Circuit Malfunction - Passenger
- Seat Belt Indicator Circuit Malfunction - Rear

&#169© Copyright Chevrolet. All rights reserved

Seat Belt Indicator Circuit Malfunction - Driver

Diagnostic Instructions

- Perform the Diagnostic System Check - Vehicle prior to using this diagnostic procedure.
- Review Strategy Based Diagnosis for an overview of the diagnostic approach.
- Diagnostic Procedure Instructions provides an overview of each diagnostic category.

Diagnostic Fault Information

Circuit	Short to Ground	High Resistance	Open	Short to Voltage	Signal Performance
Driver Seat Belt Switch Signal	1	2	2	2	-
Driver Seat Belt Switch Low Reference	-	2	2	2	-
1. Indicator will remain ON with seat belt buckled. 2. Indicator will illuminate only for the bulb check.					

Circuit/System Description

The driver seat belt switch is a 2-wire switch wired to the inflatable restraint sensing and diagnostic module (SDM) using a signal circuit and a low reference circuit. When the seat belt is unbuckled the switch is closed, and when the seat belt is buckled the switch is open. The SDM sends the status of the driver seat belt via serial data to the instrument panel cluster. After receiving the message, the instrument panel cluster controls the illumination of the driver seat belt indicator.

Reference Information

Schematic Reference

Seat Belt Schematics

Connector End View Reference

Component Connector End Views

Description and Operation

Seat Belt System Description and Operation

Electrical Information Reference

- Circuit Testing
- Connector Repairs
- Testing for Intermittent Conditions and Poor Connections
- Wiring Repairs

Scan Tool Reference

Control Module References for scan tool information

Circuit/System Verification

1. Command the instrument cluster all indicators ON and OFF with a scan tool. The driver seat belt indicator should turn ON and OFF as commanded.
   If the driver seat belt indicator does not turn ON and OFF as commanded
   Replace the P16 instrument cluster.
   If the driver seat belt indicator does turn ON and OFF as commanded
2. Monitor the scan tool Driver Seat Belt Switch parameter while buckling and unbuckling the seat belt. The parameter should display Buckled and Unbuckled when changing seat belt states.
   If the scan tool Driver Seat Belt Switch parameter does not display Buckled and Unbuckled when changing seat belt states
   Refer to Circuit/System Testing.
   If the scan tool Driver Seat Belt Switch parameter does display Buckled and Unbuckled when changing seat belt states
3. All OK.

Circuit/System Testing

Note: When removing connectors inspect for damage or corrosion. Damage or corrosion in the following requires repair or replacement of the affected component/connector.

- B88 Seat belt switch
- Seat belt switch harness connector
- K36 SDM
- SDM wiring harness connector

1. Vehicle OFF.
2. Disconnect the harness connector at the B88 seat belt switch.

3. Test for less than 5 Ω between the low reference circuit terminal 2 and ground.
   If 5 Ω or greater
   3.1. Disconnect the harness connector at the K36 SDM.
   3.2. Test for less than 2 Ω in each control circuit end to end.
   If 2 Ω or greater, repair the open/high resistance in the circuit.
   If less than 2 Ω, replace the K36 SDM.
   If less than 5 Ω
4. Vehicle in Service Mode.
5. Verify the scan tool Driver Seat Belt Status parameter displays Buckled.
   If the scan tool Driver Seat Belt Status parameter does not display Buckled
   5.1. Disconnect the harness connector at the K36 SDM.
   5.2. Test for infinite resistance between the seat belt switch signal circuit terminal 1 and ground.
   If less than infinite resistance, repair the short to ground on the circuit.
   If less than 2 Ω, replace the K36 SDM.
   If the scan tool Driver Seat Belt Status parameter does display Buckled
6. Install a 3 A fused jumper wire between the signal circuit terminal 1 and the low reference circuit terminal 2.
7. Verify the scan tool Driver Seat Belt Status parameter displays Unbuckled.
   If the scan tool Driver Seat Belt Status parameter does not display Unbuckled
   7.1. Disconnect the harness connector at the K36 SDM.
   7.2. Vehicle in Service Mode.
   7.3. Test for less than 1 V between the signal circuit and ground.
   If 1 V or greater, repair the short to voltage on the circuit.
   7.4. Test for less than 2 Ω in each circuit end to end.
   If 2 Ω or greater, repair the open/high resistance in the circuit.
   If less than 2 Ω, replace the K36 SDM.
   If the scan tool Driver Seat Belt Status parameter does display Unbuckled
8. Replace the B88 seat belt switch.

Component Testing

1. Vehicle OFF.
2. Disconnect the harness connector at the B88 seat belt switch.
3. B88 seat belt switch in the open position.
4. Test for infinite resistance between the signal circuit terminal 1 and the ground terminal 2 at the B88 seat belt switch.
   If there is not infinite resistance
   Replace the B88 seat belt switch.
   If there is infinite resistance
5. B88 seat belt switch in the closed position.

6. Test for less than 1 Ω between the signal circuit terminal 1 and the ground terminal 2 at the B88 seat belt switch.
   If 1 Ω or greater
   Replace the B88 seat belt switch.
   If less than 1 Ω
7. All OK.

Repair Instructions

Perform the Diagnostic Repair Verification after completing the diagnostic procedure.

- Front Seat Belt Buckle Replacement
- Control Module References for SDM and instrument panel cluster replacement, programming and setup

&#169© Copyright Chevrolet. All rights reserved

Seat Belt Indicator Circuit Malfunction - Passenger

Diagnostic Instructions

- Perform the Diagnostic System Check - Vehicle prior to using this diagnostic procedure.
- Review Strategy Based Diagnosis for an overview of the diagnostic approach.
- Diagnostic Procedure Instructions provides an overview of each diagnostic category.

Diagnostic Fault Information

Circuit	Short to Ground	High Resistance	Open	Short to Voltage	Signal Performance
Passenger Seat Belt Switch Signal	1	2	2	2	-
Passenger Seat Belt Switch Low Reference	-	2	2	2	-
1. Indicator will remain ON with seat belt buckled. 2. Indicator will illuminate only for the bulb check.					

Circuit/System Description

When an individual is sitting in the passenger seat the passenger presence sensor detects the individual. A signal to the SDM indicates a person is in the passenger seat. The SDM will turn the passenger seat belt indicator on while someone is seating in the passenger seat. The passenger seat belt switch is a 2-wire switch wired to the inflatable restraint sensing and diagnostic module (SDM) using a signal circuit and a low reference circuit. When the seat belt is unbuckled the switch is closed, and when the seat belt is buckled the switch is open. The SDM sends the status of the passenger seat belt via a hard wire to the passenger air bag disable indicator. The passenger air bag disable indicator will then control the illumination of the passenger seat belt indicator.

Reference Information

Schematic Reference

Seat Belt Schematics

Connector End View Reference

Component Connector End Views

Description and Operation

Seat Belt System Description and Operation

Electrical Information Reference

- Circuit Testing
- Connector Repairs
- Testing for Intermittent Conditions and Poor Connections
- Wiring Repairs

Scan Tool Reference

Control Module References for scan tool information

Circuit/System Verification

1. Vehicle in Service Mode.
2. With a scan tool, Command the Passenger Seat Belt Reminder Indicator ON and OFF.
   If the passenger seat belt reminder indicator turns ON and OFF as commanded, refer to Passenger Seat Belt Switch Malfunction.
   If the passenger seat belt reminder indicator does not turn ON and OFF as commanded, refer to Passenger Seat Belt Indicator Malfunction.

Circuit/System Testing

Passenger Seat Belt Switch Malfunction

1. Vehicle OFF.
2. Disconnect the harness connector at the appropriate B88 passenger seat belt switch.
3. Test for less than 5 Ω between the low reference circuit terminal 2 and ground.
   If 5 Ω or greater
   3.1. Disconnect the harness connector at the K36 SDM.
   3.2. Test for less than 2 Ω in each control circuit end to end.
   If 2 Ω or greater, repair the open/high resistance in the circuit.
   If less than 2 Ω, replace the K36 SDM.
   If less than 5 Ω
4. Vehicle in Service Mode.

5. Verify the scan tool Passenger Seat Belt Status parameter listed below is Buckled.
   If the scan tool Passenger Seat Belt Status parameter does not display Buckled
   5.1. Disconnect the harness connector at the K36 SDM.
   5.2. Test for infinite resistance between the seat belt switch signal circuit terminal 1 and ground.
   If less than infinite resistance, repair the short to ground on the circuit.
   If less than 2 Ω, replace the K36 SDM.
   If the scan tool Passenger Seat Belt Status parameter does display Buckled
6. Install a 3 A fused jumper wire between the signal circuit terminal 1 and the low reference circuit terminal 2.
7. Verify the scan tool Passenger Seat Belt Status parameter is Unbuckled.
   If the scan tool Passenger Seat Belt Status parameter does not display Unbuckled
   7.1. Disconnect the harness connector at the K36 SDM.
   7.2. Vehicle in Service Mode.
   7.3. Test for less than 1 V between the signal circuit and ground.
   If 1 V or greater, repair the short to voltage on the circuit.
   7.4. Test for less than 2 Ω in each circuit end to end.
   If 2 Ω or greater, repair the open/high resistance in the circuit.
   If less than 2 Ω, replace the K36 SDM.
   If the scan tool Passenger Seat Belt Status parameter does display Unbuckled
8. Replace the B88 passenger seat belt switch.

Passenger Seat Belt Indicator Malfunction

1. Vehicle OFF.
2. Disconnect the harness connector at the P14 passenger air bag disable indicator.
3. Test for less than 10 Ω between the ground circuit terminal 2 and ground.
   If 10 Ω or greater
   Repair the open/high resistance in the circuit.
   If less than 10 Ω
4. Vehicle in Service Mode.
5. With a scan tool, command the Passenger Seat Belt Reminder Indicator OFF.
6. Test for less than 11 V between the control circuit terminal 5 and ground.
   If 11 V or greater
   6.1. Vehicle OFF.
   6.2. Disconnect the X1 harness connector at the K36 SDM.
   6.3. Vehicle in Service Mode.
   6.4. Test for less than 1 V between the control circuit and ground.
   If 1 V or greater, repair the short to voltage on the circuit.
   If less than 1 V, replace the K36 SDM.

If less than 11 V

7. With a scan tool, command the Passenger Seat Belt Reminder Indicator ON.
8. Test for greater than 4 V between the control circuit terminal 5 and ground.
   If 4 V or less
   8.1. Vehicle OFF.
   8.2. Disconnect the X 1 harness connector at the K36 SDM.
   8.3. Test for infinite resistance between the control circuit and ground.
   If less than infinite resistance, repair the short to ground on the circuit.
   8.4. Test for less than 2 Ω between the control circuit and ground.
   If 2 Ω or greater repair the open/high resistance in the circuit.
   If less than 2 Ω replace the K36 SDM.
   If greater than 4 V
9. Replace the P14 passenger air bag disable indicator.

Component Testing

1. Vehicle OFF.
2. Disconnect the harness connector at the appropriate B88 seat belt switch.
3. Buckle the B88 seat belt switch.
4. Test for infinite resistance between the signal circuit terminal 1 and the low reference terminal 2 at the B88 seat belt switch.
   If there is not infinite resistance
   Replace the B88 seat belt switch.
   If there is infinite resistance
5. Unbuckle the B88 seat belt switch.
6. Test for less than 1 Ω between the signal circuit terminal 1 and the low reference terminal 2 at the B88 seat belt switch.
   If 1 Ω or greater
   Replace the B88 seat belt switch.
   If less than 1 Ω
7. All OK.

Repair Instructions

Perform the Diagnostic Repair Verification after completing the diagnostic procedure.

- Front Seat Belt Buckle Replacement
- Inflatable Restraint Instrument Panel Module Indicator Replacement
- Control Module References for SDM and Passenger Presence System replacement, programming and setup

&#169© Copyright Chevrolet. All rights reserved

Seat Belt Indicator Circuit Malfunction - Rear

Diagnostic Instructions

- Perform the Diagnostic System Check - Vehicle prior to using this diagnostic procedure.
- Review Strategy Based Diagnosis for an overview of the diagnostic approach.
- Diagnostic Procedure Instructions provides an overview of each diagnostic category.

Diagnostic Fault Information

Circuit	Short to Ground	High Resistance	Open	Short to Voltage	Signal Performance
Rear Seat Belt Switch Signal	1	2	2	2	-
Rear Seat Belt Switch Low Reference	-	2	2	2	-
1. Green indicator will illuminate only for the bulb check. The red indicator will remain ON with seat belt buckled. 2. Green indicator will illuminate only for the bulb check. The red indicator will never illuminate.					

Circuit/System Description

The two rear seat belt switches are 2-wire switch wired to the inflatable restraint sensing and diagnostic module (SDM) using a signal circuit and a low reference circuit. When the seat belt is unbuckled the switch is closed, and when the seat belt is buckled the switch is open. The SDM sends the status of the rear seat belt via serial data to the driver information centre (DIC). After receiving the message, the DIC controls the illumination of the rear seat belt indicators.

Diagnostic Aids

1. The mechanical stop in the buckle may prevent latching but the switch in the buckle may momentarily open and the SDM would interpret this as an occupant in the rear seat position and that the buckle was attempting to latch.
2. If a rear occupant attempts to latch the seat belt into the wrong buckle, the indicator may illuminate and the system assumes there is an occupant not buckled in that seat position.
3. An unseated connector can appear as a buckled seat belt connection.

Reference Information

Schematic Reference

Seat Belt Schematics

Connector End View Reference

Component Connector End Views

Description and Operation

Seat Belt System Description and Operation

Electrical Information Reference

- Circuit Testing
- Connector Repairs
- Testing for Intermittent Conditions and Poor Connections
- Wiring Repairs

Scan Tool Reference

Control Module References for scan tool information

Circuit/System Verification

1. Verify that all connectors are fully seated.
2. With a scan tool, monitor the appropriate 2nd Row Seat Belt Status parameter and P16 instrument cluster rear seat belt indicator while buckling and unbuckling the seat belt. The parameter should display Buckled when the rear seat belt is buckled and Unbuckled when the rear seat belt is unbuckled.
   If the scan tool does not display the parameters as specified, refer to Circuit System Testing.
   If the scan tool displays the parameters as specified but the P16 instrument cluster does not display the correct corresponding rear seat belt indicator, replace the P16 instrument cluster.

Circuit/System Testing

Note: When removing connectors inspect for damage or corrosion. Damage or corrosion in the following requires repair or replacement of the affected component/connector.

- B88 Seat belt switch
- Seat belt switch harness connector
- K36 SDM

- SDM wiring harness connector

1. Vehicle OFF.
2. Disconnect the harness connector at the appropriate B88 seat belt switch.
3. Test for less than 5 Ω between the low reference circuit terminal 2 and ground.
   If 5 Ω or greater
   3.1. Disconnect the harness connector at the K36 SDM.
   3.2. Test for less than 2 Ω in each control circuit end to end.
   If 2 Ω or greater, repair the open/high resistance in the circuit.
   If less than 2 Ω, replace the K36 SDM.
   If less than 5 Ω
4. Vehicle in Service Mode.
5. Verify the scan tool 2nd Row Seat Belt Status parameter displays Buckled.
   If the scan tool 2nd Row Seat Belt Status parameter does not display Buckled
   5.1. Disconnect the harness connector at the K36 SDM.
   5.2. Test for infinite resistance between the seat belt switch signal circuit terminal 1 and ground.
   If less than infinite resistance, repair the short to ground on the circuit.
   If less than 2 Ω, replace the K36 SDM.
   If the scan tool 2nd Row Seat Belt Status parameter does display Buckled
6. Install a 3 A fused jumper wire between the signal circuit terminal 1 and the low reference circuit terminal 2.
7. Verify the scan tool 2nd Row Seat Belt Status parameter displays Unbuckled.
   If the scan tool 2nd Row Seat Belt Status parameter does not display Unbuckled
   7.1. Disconnect the harness connector at the K36 SDM.
   7.2. Vehicle in Service Mode.
   7.3. Test for less than 1 V between the signal circuit and ground.
   If 1 V or greater, repair the short to voltage on the circuit.
   7.4. Test for less than 2 Ω in each circuit end to end.
   If 2 Ω or greater, repair the open/high resistance in the circuit.
   If less than 2 Ω, replace the K36 SDM.
   If the scan tool 2nd Row Seat Belt Status parameter does display Unbuckled
8. Replace the B88 seat belt switch.

Component Testing

1. Vehicle OFF.
2. Disconnect the harness connector at the appropriate B88 seat belt switch.
3. Buckle the B88 seat belt switch.
4. Test for infinite resistance between the signal circuit terminal 1 and the low reference terminal 2 at the B88 seat belt switch.

If there is not infinite resistance

Replace the B88 seat belt switch.

If there is infinite resistance

5. Unbuckle the B88 seat belt switch.
6. Test for less than 1 Ω between the signal circuit terminal 1 and the low reference terminal 2 at the B88 seat belt switch.

   If 1 Ω or greater

   Replace the B88 seat belt switch.

   If less than 1 Ω
7. All OK.

Repair Instructions

Perform the Diagnostic Repair Verification after completing the diagnostic procedure.

- Rear Seat Shoulder Belt Buckle Replacement
- Control Module References for SDM and driver information centre replacement, programming and setup

&#169© Copyright Chevrolet. All rights reserved

Front Seat Belt Buckle Replacement

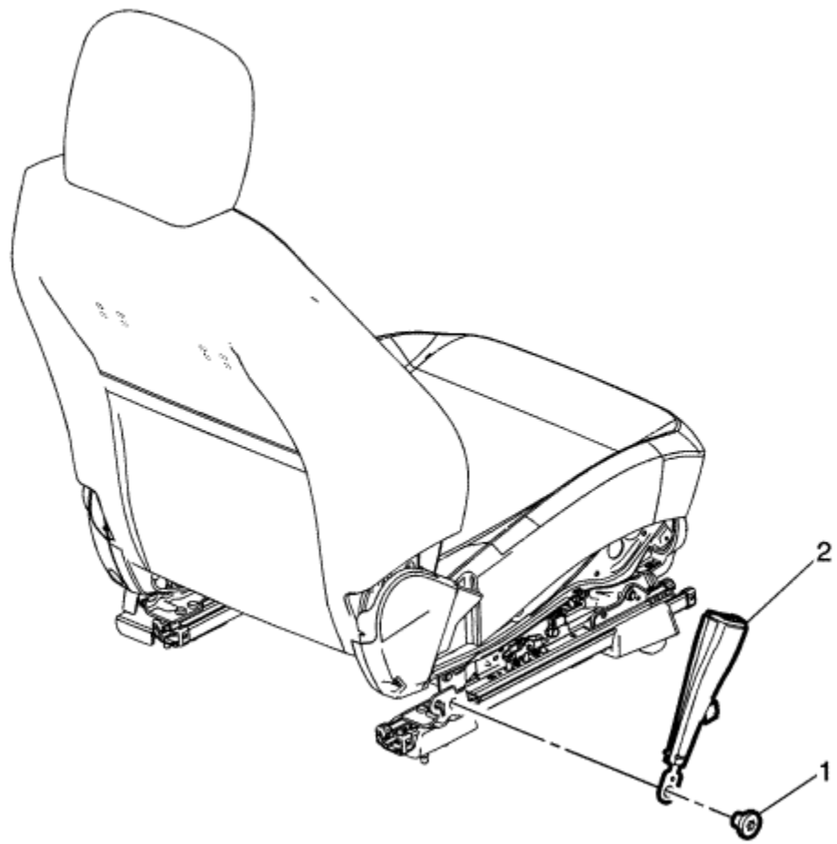

Callout	Component Name
Preliminary Procedure Remove the front seat assembly. Refer to Driver or Passenger Seat Replacement .	
	Seat Belt Buckle Fastener

1	**Caution:** Refer to Fastener Caution in the Preface section. **Tighten** 45 N·m (33 lb ft)
2	Seat (Buckle Side) Belt Assembly **Procedure** Disconnect the electrical connector.

© Copyright Chevrolet. All rights reserved

Shoulder Belt Replacement - Rear

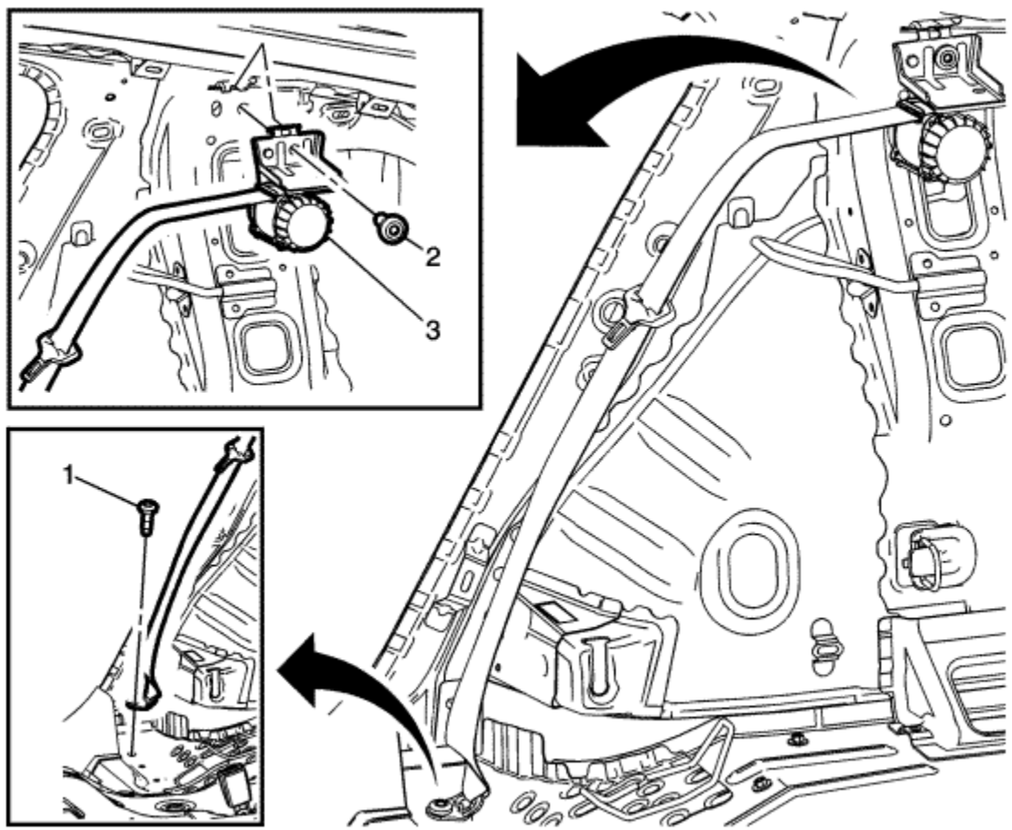

Callout	Component Name
Preliminary Procedure Remove the quarter inner trim finish panel. Refer to Quarter Inner Trim Finish Panel Replacement .	
	Rear Seat Shoulder Belt Fastener

1	**Caution:** Refer to Fastener Caution in the Preface section. **Tighten** 45 N·m (33 lb ft)
2	Rear Seat Shoulder Belt Bracket Fastener **Tighten** 45 N·m (33 lb ft)
3	Rear Seat Shoulder Belt Assembly

© Copyright Chevrolet. All rights reserved

Rear Seat Shoulder Belt Buckle Replacement

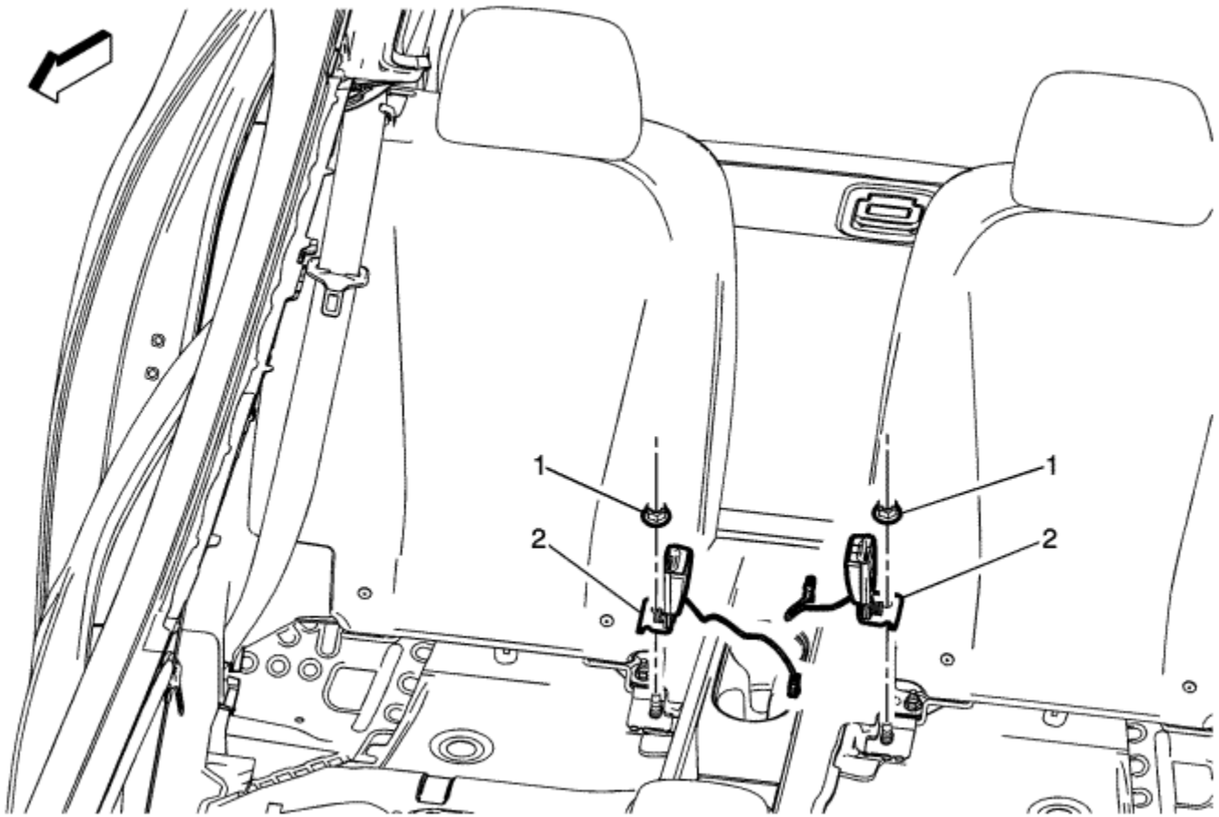

Callout	Component Name
Preliminary Procedure Remove the front floor rear console. Refer to Front Floor Rear Console Replacement .	
	Rear Seat Shoulder Belt Buckle Fastener (Qty: 2)

1	**Caution:** Refer to Fastener Caution in the Preface section. **Tighten** 45 N·m (33 lb ft)
2	Rear Seat Shoulder Belt Buckle Assembly **Procedure** Disconnect the electrical connector.

© Copyright Chevrolet. All rights reserved

Seat Belt System Description and Operation

Restraint System

The vehicle has front and rear seat belts that are the primary means of occupant restraint. Seat belts help to keep the occupants inside the passenger compartment and to gradually reduce the impact forces during the following events:

- Frontal impact type crashes
- Rear impact type crashes
- Side impact type crashes
- Roll-over type crashes

All seat belt retractors have emergency locks. The retractors remain unlocked during normal operation and under normal driving conditions. The retractors remain unlocked during normal conditions in order to allow free movement of the upper body of each occupant. A pendulum locks the seat belt webbing into position. The pendulum causes a locking bar to engage a cog on the spool of the retractor mechanism when the following conditions occur:

- A rapid extraction of the seat belt webbing from the retractor
- An abrupt change in vehicle speed
- An abrupt change in vehicle direction
- Operation of the vehicle on a steep upgrade
- Operation of the vehicle on a downgrade

The seat belts have an automatic locking (cinch) feature. The cinch feature is activated when the seat belt webbing is completely extended from the retractor. The cinch feature prevents the webbing from extending beyond the position from which it is allowed to retract. Use of the cinch feature is recommended for securing a child seat. The cinch feature may be cancelled by allowing the webbing to wind back completely into the retractor. After the cinch feature is cancelled, the webbing is unlocked. After the cinch feature is cancelled, the webbing will extend from the retractor. This vehicle is also equipped with a supplemental inflatable restraint (SIR) system. Refer to SIR System Description and Operation .

Front Seat Belt System

The front seat belt system includes a driver and passenger seat belt pretensioner retractor and anchor. Both front seat belt pretensioners includes a seat belt switch in the seat buckle which controls a reminder lamp and a tone alarm.

Note: The front passenger seat is equipped with a passenger presence detection sensor, which detects an occupant. If the passenger presence detection sensor detects an

empty front passenger seat, then the passenger fasten safety belt indicator will be disabled.

- When the driver seat belt is buckled and the ignition switch is turned ON, the following events will occur:
  - The tone alarm will not operate.
  - The reminder lamp will not operate.
- When the passenger seat belt is buckled with an occupant sitting in the passenger front seat, then the ignition switch is turned ON, the following events will occur:
  - The tone alarm will not operate.
  - The reminder lamp, which is located within the Passenger Air Bag Disable Indicator, will not be turned ON.
- When the driver seat belt is not buckled and the ignition switch is in the ON position, the following events will occur:
  - The tone alarm will operate for 4-8 seconds and then go OFF.
  - The fasten safety belt indicator will turn ON for 20 seconds, until the driver seat belt is buckled.
- When the passenger seat belt is not buckled with an occupant sitting in the passenger front seat, then the ignition switch is turned ON, the following events will occur:
  - The tone alarm will operate for 4-8 seconds and then go OFF.
  - The reminder lamp, which is located within the Passenger Air Bag Disable Indicator, will be turned ON.

Rear Seat Belt System

The Rear Seat Belt System includes the following components:

- The rear seat belt retractor is located at the wheelhouse panel and attached to the floor panel by the rear seat shoulder belt retractor bracket.
- The rear seat belt buckles are attached to each seat.
- Each of the rear seat belts include a seat belt switch in the seat buckle which controls a reminder lamp and a tone alarm.
- If both rear seat belts are unbuckled when the vehicle is started the rear seat belt indicators show as red indicators in the DIC.
- If any rear seat belts are buckled when the vehicle is started, the corresponding indicators will be green for that seat.
- When the ignition switch is turned ON, a rear seat belt is buckled, the rear doors are closed and the speed exceeds 10 kph (6.5 mph) for a continuous 35 seconds the following events will occur:
  - The tone alarm will not operate.
  - The green rear seat belt indicators in the Driver Information Centre will illuminate for 35 seconds.
- When the ignition switch is turned ON, a rear seat belt is not buckled for the duration of the ignition cycle, the rear doors are closed and the speed exceeds 10 kph (6.5 mph) for a continuous 35 seconds the following events will occur:
  - The tone alarm will not operate.
  - The red rear seat belt indicator in the Driver Information Centre will remain illuminated.
- When the ignition switch is turned ON, a rear seat belt is buckled and during that ignition cycle is unbuckled with the rear doors closed at all times and the speed exceeding 10 kph (6.5 mph) for a continuous 35 seconds the following events will occur:
  - The tone alarm will operate for 3 seconds.
  - The red rear seat belt indicator in the Driver Information Centre will illuminate and remain on for a continuous 35 seconds until the seat belt is buckled again or the

ignition cycle ends.

Child Seat Restraint System

Warning: A child in a rear-facing child restraint can be seriously injured if the right-front passengers air bag inflates. This is because the back of a rear-facing child restraint would be very close to the inflating air bag. NEVER use a rear-facing child restraint in this vehicle. If a forward-facing child restraint is suitable for your child, ALWAYS move the front passenger seat as far back as it will go and then install the child restraint. Be sure the child restraint position does not conflict with any additional requirements provided by the manufacturer. For more information, refer to the vehicle owners manual and the instruction that came with the child restraint.

A child in a rear-facing child restraint can be seriously injured if the right-front passengers air bag inflates. This is because the back of a rear-facing child restraint would be very close to the inflating air bag. NEVER use a rear-facing child restraint in this vehicle. If a forward-facing child restraint is suitable for your child, ALWAYS move the front passenger seat as far back as it will go and then install the child restraint. Be sure the child restraint position does not conflict with any additional requirements provided by the manufacturer. For more information, refer to the vehicle owners manual and the instruction that came with the child restraint.

The child seat may only be used in a forward facing seating location. The child seat should be installed and secured according to the manufacturer's directions. If the child seat has a top strap, the seat will need to be anchored. Passengers should not be allowed to sit at locations where the seat belts are being used to secure the child seat.

All vehicles are equipped with a dual-mode type retractor with emergency and automatic locking features. The automatic locking feature is for restraint of a child seat. The child seat can be secured by pulling the seat belt all the way out to lock it. Then tighten the seat belt around the child seat.

If a child seat is to be used in the second seat position, a special dealer-installed anchor must be used in order to anchor the child seat top strap. This only applies to the seats designed with the top strap provision and for the vehicles sold in Canada. In order to ensure the correct top strap angle, the child seat is only to be used at the seating position for which the top strap anchor is installed.

Fasten Safety Belt Indicators

There are three fasten safety belt indicators for this vehicle. The driver fasten safety belt reminder is displayed in the instrument cluster, the passenger fasten safety belt reminder is displayed in the passenger air bag disable indicator, and the rear fasten safety belt reminder is displayed in the driver information centre. The fasten safety belt indicator may only be ON during RUN. The fasten safety belt indicator illuminates under the following conditions:

- During the bulb check
- The inflatable restraint sensing and diagnostic module (SDM) sends the status of the driver seat belt to the instrument cluster via serial data. The passenger seat belt status is sent to the passenger air bag disable indicator via serial data. The rear seat belt status is sent to the driver information centre via serial data. If any of the seat belts are unfastened, the instrument cluster will send a message requesting a chime sound to be turned ON after a bulb check.

&#169© Copyright Chevrolet. All rights reserved

SIR Schematics

Figure 1: Power, Ground, Data Communication and Passenger Presence Detection
Figure 2: Impact Sensors
Figure 3: Air Bags
Figure 4: Pretensioners

© Copyright Chevrolet. All rights reserved

SIR Identification Views

The SIR Identification Views shown below illustrate the approximate location of all SIR components available for the vehicle. This will assist in determining the appropriate SIR Disabling and Enabling for a given service procedure. Refer to SIR Disabling and Enabling .

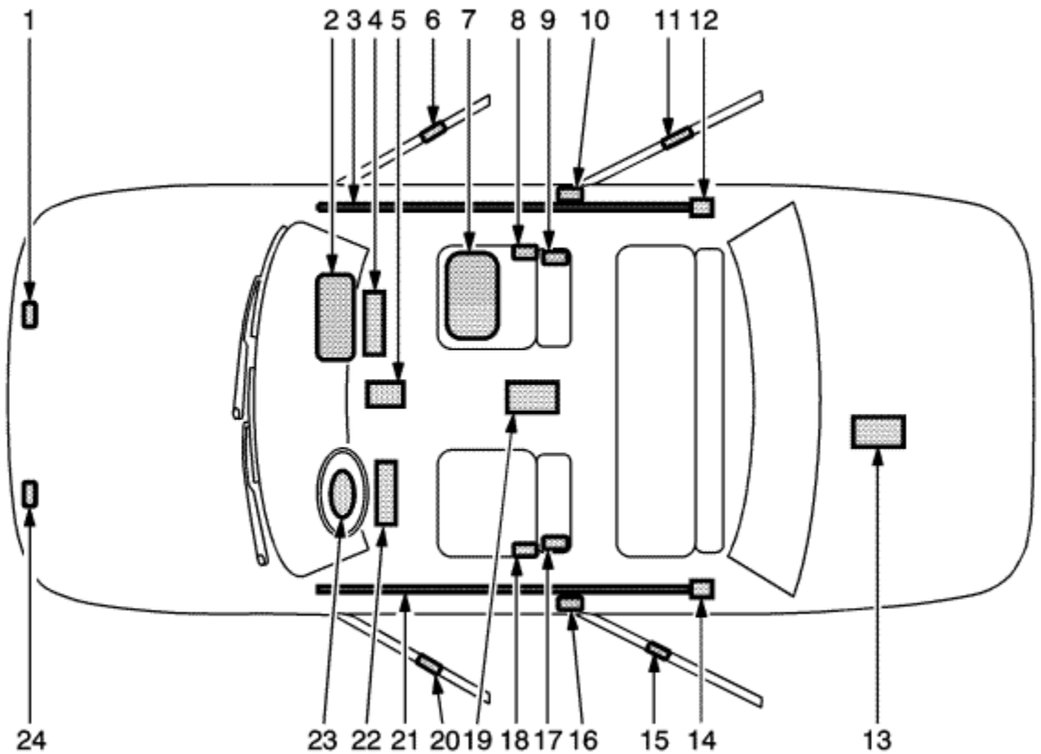

(1) Right Front Impact Sensor--Located under the hood at the front right side of the vehicle
(2) Passenger Instrument Panel Air Bag--Located at the top right under the instrument panel
(3) Right Roof Rail Air Bag--Located under the headliner, extending from the passenger front windscreen pillar to the passenger rear windscreen pillar

(4) Passenger Knee Air Bag--Located in the instrument panel behind the glove box.
(5) Inflatable Restraint Sensing and Diagnostic Module (SDM)--Located underneath the centre console
(6) Right Front Side Impact Sensor--Located in the right front door
(7) Passenger Presence System --Located on the passenger front seat underneath the seat bottom trim
(8) Passenger Seat Belt Anchor Pretensioner--Located on the outboard side of the passenger seat
(9) Passenger Seat Side Air Bag--Located on the seat back of the passenger seat
(10) Passenger Seat Belt Retractor Pretensioner--Located under the trim near the bottom of the central pillar on the passenger side of vehicle
(11) Right Rear Side Impact Sensor--Located in the right rear door
(12) Inflater Module for Right Roof Rail Air Bag--Located behind the headlining above the C-pillar
(13) 12 V Battery--Located in the boot
(14) Inflator Module for Left Roof Rail Air Bag--Located behind the headliner above the C-pillar
(15) Left Rear Side Impact Sensor--Located in the left rear door
(16) Driver Seat Belt Retractor Pretensioner--Located under the trim near the bottom of the central pillar on the driver side of vehicle
(17) Driver Seat Side Air Bag--Located on the seat back of the driver seat
(18) Driver Seat Belt Anchor Pretensioner--Located on the outboard side of the driver seat
(19) 300 V Battery--Located in between the driver and passenger seats, underneath the centre console
(20) Left Front Side Impact Sensor--Located in the left front door
(21) Left Roof Rail Air Bag--Located under the headliner, extending from the driver front windscreen pillar to the driver rear windscreen pillar
(22) Driver Knee Air Bag--Located in the instrument panel below the steering wheel
(23) Driver Steering Wheel Air Bag--Located on the steering wheel
(24) Left Front Impact Sensor--Located under the hood at the front left side of the vehicle

© Copyright Chevrolet. All rights reserved

DTC B0012 or B0013

Diagnostic Instructions

- Perform the Diagnostic System Check - Vehicle prior to using this diagnostic procedure.
- Review Strategy Based Diagnosis for an overview of the diagnostic approach.
- Diagnostic Procedure Instructions provides an overview of each diagnostic category

DTC Descriptors

DTC B0012 01: Driver Steering Wheel Air Bag Deployment Loop Stage 1 Short to Battery

DTC B0012 02: Driver Steering Wheel Air Bag Deployment Loop Stage 1 Short to Ground

DTC B0012 04: Driver Steering Wheel Air Bag Deployment Loop Stage 1 Open

DTC B0012 0D: Driver Steering Wheel Air Bag Deployment Loop Stage 1 High Resistance

DTC B0012 0E: Driver Steering Wheel Air Bag Deployment Loop Stage 1 Low Resistance

DTC B0013 01: Driver Steering Wheel Air Bag Deployment Loop Stage 2 Short to Battery

DTC B0013 02: Driver Steering Wheel Air Bag Deployment Loop Stage 2 Short to Ground

DTC B0013 04: Driver Steering Wheel Air Bag Deployment Loop Stage 2 Open

DTC B0013 0D: Driver Steering Wheel Air Bag Deployment Loop Stage 2 High Resistance

DTC B0013 0E: Driver Steering Wheel Air Bag Deployment Loop Stage 2 Low Resistance

Diagnostic Fault Information

Circuit	Short to Ground	High Resistance	Open	Short to Voltage	Signal Performance

Driver Steering Wheel Air Bag Stage 1 High Control	B0012 02, B0012 0E	B0012 0D	B0012 04, B0012 0D	B0012 01	-
Driver Steering Wheel Air Bag Stage 1 Low Control	B0012 02, B0012 0E	B0012 0D	B0012 04, B0012 0D	B0012 01	-
Driver Steering Wheel Air Bag Stage 2 High Control	B0013 02, B0013 0E	B0013 0D	B0013 04, B0013 0D	B0013 01	-
Driver Steering Wheel Air Bag Stage 2 Low Control	B0013 02, B0013 0E	B0013 0D	B0013 04, B0013 0D	B0013 01	--

Circuit/System Description

During a frontal crash of sufficient force the inflatable restraint sensing and diagnostic module (SDM) will allow current to flow through the deployment loop in order to deploy the steering wheel air bag. The SDM performs continuous diagnostic tests on the deployment loops to check for proper circuit continuity and for shorts to ground or voltage. There are 2 shorting bars used within the steering wheel air bag coil connector which will short together both steering wheel air bag stage 1 high control circuit and steering wheel air bag stage 1 low control circuit and both steering wheel air bag stage 2 high control circuit and steering wheel air bag stage 2 low control circuit when the connector is disconnected. This will help to prevent unwanted deployment of the steering wheel air bag during servicing.

Conditions for Running the DTC

Ignition voltage is between 9-16 V.

Conditions for Setting the DTC

B0012 01 stage 1 or B0013 01 stage 2

The steering wheel air bag deployment loop is shorted to voltage for 2 seconds.

B0012 02 stage 1 or B0013 02 stage 2

The steering wheel air bag deployment loop is shorted to ground for 2 seconds.

B0012 04 stage 1 or B0013 04 stage 2

The steering wheel air bag deployment loop is open for 2 seconds.

B0012 0D stage 1 or B0013 0D stage 2

The steering wheel air bag deployment loop resistance is greater than 4.4 Ω for 2 seconds.

B0012 0E stage 1 or B0013 0E stage 2

The steering wheel air bag deployment loop resistance is less than 1.7 Ω for 2 seconds.

Action Taken When the DTC Sets

- The SDM requests the instrument cluster to illuminate the AIR BAG indicator.
- The SDM will store a DTC, however if an event occurs the system will still attempt deployment.

Conditions for Clearing the DTC

- The condition for setting the DTC is no longer exists.
- A history DTC will clear once 100 malfunction-free ignition cycles have occurred.

Diagnostic Aid

Note: The following diagnostic aids apply for both current and history DTCs.

A worn steering wheel air bag coil can cause a repeated history DTC to set. To verify this condition, turn the steering wheel 360 degrees in one direction then back 360 degrees in the other direction, multiple times, while viewing the scan tool Deployment Loop Resistance parameters.

An incorrectly installed CPA or incorrectly seated connector can cause a shorting bar to short both control circuits together. Check the connectors and CPAs if a DTC with symptom byte 02 or 0E is set, to ensure the shorting bars are not causing the circuits to be shorted together. Shorting bars are used in the locations listed below:

- Steering wheel air bag assembly
- Steering wheel air bag coil assembly
- Inline connectors - on the steering wheel air bag side of the harness connector
- Harness side of the SDM connector

Terminal fretting or incorrectly seated connector can cause an open/high resistance condition. Check the circuit terminals for fretting or incorrectly seated connector if a DTC with symptom byte 04 or 0D is set.

If the steering wheel air bag has inflated under unexpected conditions and/or DTC with symptom byte 01 is set, check both control circuits for a short to voltage.

Reference Information

Schematic Reference

SIR Schematics

Connector End View Reference

Component Connector End Views

Description and Operation

SIR System Description and Operation

Electrical Information Reference

- Circuit Testing
- Testing for Intermittent Conditions and Poor Connections
- Wiring Repairs
- Connector Repairs

Scan Tool Reference

Control Module References for scan tool information

Circuit/System Verification

Note: Refer to SIR Service Precautions

Inspect all terminals for damage or corrosion when disconnecting connectors. Damage or corrosion in the following requires repair or replacement of the affected component/connector.

- Driver Steering Wheel Air bag
- Driver steering wheel air bag coil
- SDM
- Air bag wiring harness connector
- SDM wiring harness connector

Note: The connector and connector position assurance (CPA) may seat independently of each other. Both the connector and CPA should seat with an audible and/or tactile click. The CPA isolates the shorting-bars within the connector allowing the deployment circuit to operate properly.

If the condition is intermittent or cannot be duplicated, disconnect the connectors and add Nyogel lubricant 760G. This procedure will correct the high resistance condition due to terminal fretting corrosion.

1. Verify the scan tool Deployment Loop Resistance parameters stay consistently between 2.1 and 4.0 Ω without any spikes or dropouts while turning the steering wheel 360 degrees in one direction then back 360 degrees in the other direction.
   If less than 2.1 or greater than 4.0 Ω
   Refer to Circuit/System Testing.
   If there are spikes or dropouts

Replace the X85 driver steering wheel air bag coil.

If within 2.1 and 4.0 Ω without any spikes or dropouts

2. DTC B0012 or B0013 should only be set as a history DTC.

   If the DTC is set as current

   Refer to Circuit/System Testing.

   If the DTC is set as history

3. Verify the scan tool Deployment Loop Resistance parameters stay consistently between 2.1 and 4.0 Ω without any drop outs or spikes while moving the harness near each connector listed below.
   - X85 Steering wheel air bag coil
   - F107 Steering wheel air bag.
   - Any harness inline
   - K36 SDM

   If the reading is erratic while moving the harness, perform the following

   - Inspect each connector terminal for damage or corrosion and repair as necessary.
   - Apply Nyogel lubricant 760G to each connector terminal.
   - Insure each connector and CPA is correctly seated.

   If within 2.1 and 4.0 Ω without any spikes or dropouts

4. All OK

Circuit/System Testing

1. Vehicle OFF, disconnect the scan tool and disconnect the harness connector X1 at the F107 driver steering wheel air bag then wait for 120 seconds.
2. Test for greater than 25 Ω between the control circuit terminals 1 X1 and 2 X1 (Stage 1) or terminals 1 X2 and 2 X2 (Stage 2).

   If 25 Ω or less

   2.1. Disconnect the harness connector X1 at the K36 SDM.

   2.2. Test for infinite resistance between the two control circuits.

   If less than infinite resistance, repair the short between the two circuits.

   If infinite resistance, replace the K36 SDM.

   If greater than 25 Ω

3. Vehicle in Service Mode.
4. Test for less than 11 V between the control circuit terminals listed below and ground:
   - Control circuit terminal 1 X1 (stage 1)
   - Control circuit terminal 2 X1 (stage 1)
   - Control circuit terminal 1 X2 (stage 2)
   - Control circuit terminal 2 X2 (stage 2)

   If 11 V or greater

4.1. Vehicle OFF, disconnect the harness connector X1 at the K36 SDM, Vehicle in Service Mode.
4.2. Test for less than 1 V between the control circuit and ground.
If 1 V or greater, repair the short to voltage on the circuit.
If less than 1 V, replace the K36 SDM.

If less than 11 V

5. Vehicle OFF.
6. Test for greater than 25 Ω between the control circuit terminals listed below and ground:
   - Control circuit terminal 1 X1 (stage 1)
   - Control circuit terminal 2 X1 (stage 1)
   - Control circuit terminal 1 X2 (stage 2)
   - Control circuit terminal 2 X2 (stage 2)

   If 25 Ω or less

   6.1. Disconnect the harness connector at the K36 SDM.
   6.2. Test for infinite resistance between the control circuit and ground.
   If less than infinite resistance, repair the short to ground on the circuit.
   If infinite resistance, replace the K36 SDM.

   If greater than 25 Ω
7. Install a 3 A fused jumper wire between the control circuit terminals 1 X1 and 2 X1 (Stage 1) or terminals 1 X2 and 2 X2 (Stage 2).
8. Vehicle in Service Mode, verify the scan tool Deployment Loop Resistance parameter is consistently less than 2 Ω while turning the steering wheel 360 degrees in one direction then back 360 degrees in the other direction.

   If the reading is erratic while turning the steering wheel

   Replace the X85 driver steering wheel airbag coil.

   If 2 Ω or greater

   8.1. Vehicle OFF, disconnect the harness connector X1 at the K36 SDM.
   8.2. Test for less than 2 Ω in the driver steering wheel airbag coil and each control circuit end to end.
   If 2 Ω or greater, replace the coil or repair the open/high resistance in the circuit.
   If less than 2 Ω, replace the K36 SDM.

   If less than 2 Ω
9. Replace the F107 driver steering wheel air bag.

Repair Instructions

Perform the Diagnostic Repair Verification after completing the diagnostic procedure.

- Steering Wheel Airbag Coil Replacement
- Steering Wheel Inflatable Restraint Module Replacement
- SIR/SRS Wiring Repairs

- Control Module References for SDM replacement, programming and setup

&#169© Copyright Chevrolet. All rights reserved

DTC B0014, B0021, B0031, or B0038

Diagnostic Instructions

- Perform the Diagnostic System Check - Vehicle prior to using this diagnostic procedure.
- Review Strategy Based Diagnosis for an overview of the diagnostic approach.
- Diagnostic Procedure Instructions provides an overview of each diagnostic category.

DTC Descriptors

DTC B0014 01: Driver Seat Side Air Bag Deployment Loop Short to Battery

DTC B0014 02: Driver Seat Side Air Bag Deployment Loop Short to Ground

DTC B0014 04: Driver Seat Side Air Bag Deployment Loop Open

DTC B0014 0D: Driver Seat Side Air Bag Deployment Loop High Resistance

DTC B0014 0E: Driver Seat Side Air Bag Deployment Loop Low Resistance

DTC B0021 01: Passenger Seat Side Air Bag Deployment Loop Short to Battery

DTC B0021 02: Passenger Seat Side Air Bag Deployment Loop Short to Ground

DTC B0021 04: Passenger Seat Side Air Bag Deployment Loop Open

DTC B0021 0D: Passenger Seat Side Air Bag Deployment Loop High Resistance

DTC B0021 0E: Passenger Seat Side Air Bag Deployment Loop Low Resistance

Diagnostic Fault Information

Circuit	Short to Ground	High Resistance	Open	Short to Voltage	Signal Performance

Driver Seat Side Air Bag High Control	B0014 02, B0014 0E	B0014 0D	B0014 04, B0014 0D	B0014 01	-
Driver Seat Side Air Bag Low Control	B0014 02, B0014 0E	B0014 0D	B0014 04, B0014 0D	B0014 01	-
Passenger Seat Side Air Bag High Control	B0021 02, B0021 0E	B0021 0D	B0021 04, B0021 0D	B0021 01	-
Passenger Seat Side Air Bag Low Control	B0021 02, B0021 0E	B0021 0D	B0021 04, B0021 0D	B0021 01	--

Circuit/System Description

During a side or frontal crash of sufficient force the inflatable restraint sensing and diagnostic module (SDM) will allow current to flow through the deployment loop in order to deploy an air bag. There are 2 shorting bars used within the connector that will short together the control circuits, when the connector is disconnected. This will help to prevent unwanted deployment of the air bag or retractor pretensioner during servicing.

Conditions for Running the DTC

Ignition voltage is between 9-16 V.

Conditions for Setting the DTC

B0014 01, B0021 01

The air bag control circuit is shorted to voltage for 2 seconds.

B0014 02, B0021 02

The air bag control circuit is shorted to ground for 2 seconds.

B0014 04, B0021 04

The air bag control circuit is open for 2 seconds.

B0014 0D, B0021 0D

The air bag deployment loop resistance is greater than 4.2 Ω for 2 seconds.

B0014 0E, B0021 0E

The air bag deployment loop resistance is less than 1.4 Ω for 2 seconds.

Action Taken When the DTC Sets

- The SDM requests the instrument cluster to illuminate the AIR BAG indicator.
- The SDM will store a DTC, however if an event occurs the system will still attempt deployments.

Conditions for Clearing the DTC

- The condition for setting the DTC no longer exists.
- A history DTC will clear once 100 malfunction-free ignition cycles have occurred.

Diagnostic Aid

Note: The following diagnostic aids apply for both current and history DTCs.

An incorrectly installed CPA or incorrectly seated connector can cause a shorting bar to short both control circuits together. Check the connectors and CPAs if a DTC with symptom byte 02 or 0E is set, to ensure the shorting bars are not causing the circuits to be shorted together. Shorting bars are used in the locations listed below:

- Left and rear seat side air bags
- Left and right roof rail air bags
- Inline connectors - on the side of the harness connector
- Harness side of the SDM connector

Terminal fretting or incorrectly seated connector can cause an open/high resistance condition. Check the circuit terminals for fretting or incorrectly seated connector if a DTC with symptom byte 04 or 0D is set. DTCs of deployment loops which are in the seat can occur because of stress or damage to the harness due to seat movement. Move the seat to the full extend of travel while using the scan tool to observe deployment type loop parameters.

If the retractor pretensioner, passenger instrument panel air bags, roof rail air bags, knee air bags, or seat side air bag has inflated under unexpected conditions and/or DTC with symptom byte 01 is set, check both control circuits for a short to voltage.

Reference Information

Schematic Reference

SIR Schematics

Connector End View Reference

Component Connector End Views

Description and Operation

SIR System Description and Operation

Electrical Information Reference

- Circuit Testing
- Testing for Intermittent Conditions and Poor Connections
- Wiring Repairs
- Connector Repairs

Scan Tool Reference

Control Module References for scan tool information

Circuit/System Verification

Note: Refer to SIR Service Precautions .

Inspect all terminals for damage or corrosion when disconnecting connectors. Damage or corrosion in the following requires repair or replacement of the affected component/connector.

- Seat belt retractor pretensioner
- Passenger instrument panel air bag
- Side air bag
- Knee air bag
- Roof rail air bag
- SDM
- All wiring harness connectors
- SDM wiring harness connector

Note: The connector and connector position assurance (CPA) may seat independently of each other. Both the connector and CPA should seat with an audible and/or tactile click. The CPA isolates the shorting-bars within the connector allowing the deployment circuit to operate properly.

If the condition is intermittent or cannot be duplicated, disconnect the connectors and add Nyogel lubricant 760G. This procedure will correct the high resistance condition due to terminal fretting corrosion.

1. Verify the scan tool Deployment Loop Resistance parameters stay consistently between 2.1 and 4.0 Ω without any spikes or dropouts while moving the harness near each connector.
   - F106 side air bag
   - Any inline harness

- K36 SDM

If less than 2.1 or greater than 4.0 Ω

Refer to Circuit/System Testing.

If there are spikes or dropouts, perform the following

- Inspect each connector terminal and harness for damage or corrosion and repair as necessary
- Apply Nyogel lubricant 760G to each connector terminal
- Insure each connector and CPA is correctly seated.

If within 2.1 and 4.0 Ω without any spikes or dropouts

2. All OK

Circuit/System Testing

1. Vehicle OFF, disconnect the scan tool and then disconnect the appropriate F106 side air bag harness connector and then wait for 120 seconds.
2. Test for greater than 25 Ω between the control circuit terminals 1 and 2.

If 25 Ω or less

2.1. Disconnect the X2 harness connector at the K36 SDM.

2.2. Test for infinite resistance between the two control circuits.

If less than infinite resistance, repair the short between the two circuits.

If infinite resistance, replace the K36 SDM.

If greater than 25 Ω

3. Vehicle in Service Mode.
4. Test for less than 11 V between the control circuit terminals listed below and ground:
   - Control circuit terminal 1
   - Control circuit terminal 2

If 11 V or greater

4.1. Vehicle OFF, disconnect the X2 harness connector at the K36 SDM, Vehicle in Service Mode.

4.2. Test for less than 1 V between the control circuit and ground.

If 1 V or greater, repair the short to voltage on the circuit.

If less than 1 V, replace the K36 SDM.

If less than 11 V

5. Vehicle OFF.
6. Test for greater than 25 Ω between the control circuit terminals listed below and ground:
   - Control circuit terminal 1
   - Control circuit terminal 2

If 25 Ω or less

6.1. Disconnect the X2 harness connector at the K36 SDM.

6.2. Test for infinite resistance between the control circuit and ground.
If less than infinite resistance, repair the short to ground on the circuit.
If infinite resistance, replace the K36 SDM.

If greater than 25 Ω

7. Vehicle OFF, install a 3 A fused jumper wire between the control circuit terminals 1 and 2.
8. Vehicle in Service Mode, verify the scan tool Deployment Loop Resistance parameter is less than 2 Ω.

If 2 Ω or greater

8.1. Vehicle OFF, disconnect the X2 harness connector at the K36 SDM.
8.2. Test for less than 2 Ω in each control circuit end to end.
If 2 Ω or greater, repair the open/high resistance in the circuit.
If less than 2 Ω, replace the K36 SDM.

If less than 2 Ω

9. Replace the appropriate F106 side air bag.

Repair Instructions

Perform the Diagnostic Repair Verification after completing the diagnostic procedure.

- Driver or Passenger Seat Side Inflatable Restraint Module Replacement
- Control Module References for SDM control module replacement, programming and setup

&#169© Copyright Chevrolet. All rights reserved

DTC B0015, B001A, B001B, or B0022

Diagnostic Instructions

- Perform the Diagnostic System Check - Vehicle prior to using this diagnostic procedure.
- Review Strategy Based Diagnosis for an overview of the diagnostic approach.
- Diagnostic Procedure Instructions provides an overview of each diagnostic category.

DTC Descriptors

DTC B0015 01: Driver Seat Belt Retractor Pretensioner Deployment Loop Short to Battery

DTC B0015 02: Driver Seat Belt Retractor Pretensioner Deployment Loop Short to Ground

DTC B0015 04: Driver Seat Belt Retractor Pretensioner Deployment Loop Open

DTC B0015 0D: Driver Seat Belt Retractor Pretensioner Deployment Loop High Resistance

DTC B0015 0E: Driver Seat Belt Retractor Pretensioner Deployment Loop Low Resistance

DTC B001A 01: Driver Seat Belt Anchor Pretensioner Deployment Loop Short circuit to Battery

DTC B001A 02: Driver Seat Belt Anchor Pretensioner Deployment Loop Short circuit to Ground

DTC B001A 04: Driver Seat Belt Anchor Pretensioner Deployment Loop Open circuit

DTC B001A 0D: Driver Seat Belt Anchor Pretensioner Deployment Loop High Resistance

DTC B001A 0E: Driver Seat Belt Anchor Pretensioner Deployment Loop Low Resistance

DTC B001B 01: Passenger Seat Belt Anchor Pretensioner Deployment Loop Short circuit to Battery

DTC B001B 02: Passenger Seat Belt Anchor Pretensioner Deployment Loop Short circuit to Ground

DTC B001B 04: Passenger Seat Belt Anchor Pretensioner Deployment Loop Open circuit

DTC B001B 0D: Passenger Seat Belt Anchor Pretensioner Deployment Loop High Resistance

DTC B001B 0E: Passenger Seat Belt Anchor Pretensioner Deployment Loop Low Resistance

DTC B0022 01: Passenger Seat Belt Retractor Pretensioner Deployment Loop Short to Battery

DTC B0022 02: Passenger Seat Belt Retractor Pretensioner Deployment Loop Short to Ground

DTC B0022 04: Passenger Seat Belt Retractor Pretensioner Deployment Loop Open Circuit

DTC B0022 0D: Passenger Seat Belt Retractor Pretensioner Deployment Loop High Resistance

DTC B0022 0E: Passenger Seat Belt Retractor Pretensioner Deployment Loop Low Resistance

Diagnostic Fault Information

Circuit	Short to Ground	High Resistance	Open	Short to Voltage	Signal Performance
Driver Seat Belt Retractor Pretensioner High Control	B0015 02, B0015 0E	B0015 0D	B0015 04, B0015 0D	B0015 01	-
Driver Seat Belt Retractor Pretensioner Low Control	B0015 02, B0015 0E	B0015 0D	B0015 04, B0015 0D	B0015 01	-
Driver Seat Belt Anchor Pretensioner Low Control	B001A 02, B001A 0E	B001A 0D	B001A 04	B001A 01	-
Driver Seat Belt Anchor Pretensioner High Control	B001A 02, B001A 0E	B001A 0D	B001A 04	B001A 01	-
Passenger Seat Belt Anchor Pretensioner Low Control	B001B 02, B001B 0E	B001B 0D	B001B 04	B001B 01	-
Passenger Seat Belt Anchor Pretensioner High Control	B001B 02, B001B 0E	B001B 0D	B001B 04	B001B 01	-
Passenger Seat Belt Retractor Pretensioner High Control	B0022 02, B0022 0E	B0022 0D	B0022 04, B0022 0D	B0022 01	-
Passenger Seat Belt Retractor Pretensioner Low Control	B0022 02, B0022 0E	B0022 0D	B0022 04, B0022 0D	B0022 01	--

Circuit/System Description

During a side or frontal crash of sufficient force the inflatable restraint sensing and diagnostic module (SDM) will allow current to flow through the deployment loop in order to deploy an air bag or pretensioner. There are 2 shorting bars which will short together control circuits, when the connector is disconnected. This will help to prevent unwanted deployment of the air bag or pretensioner during servicing.

Conditions for Running the DTC

Ignition voltage is between 9-16 V.

Conditions for Setting the DTC

B0015 01, B001A 01, B001B 01, B0022 01

The pretensioner control circuit is shorted to voltage for 2 seconds.

B0015 02, B001A 02, B001B 02, B0022 02

The pretensioner control circuit is shorted to ground for 2 seconds.

B0015 04, B001A 04, B001B 04, B0022 04

The pretensioner control circuit is open for 2 seconds.

B0015 0D, B001A 0D, B001B 0D, B0022 0D

The pretensioner deployment loop resistance is greater than 4.2 Ω for 2 seconds.

B0015 0E, B001A 0E, B001B 0E, B0022 0E

The pretensioner deployment loop resistance is less than 1.4 Ω for 2 seconds.

Action Taken When the DTC Sets

- The SDM requests the instrument cluster to illuminate the AIR BAG indicator.
- The SDM will store a DTC, however if an event occurs the system will still attempt deployments.

Conditions for Clearing the DTC

- The condition for setting the DTC no longer exists.
- A history DTC will clear once 100 malfunction-free ignition cycles have occurred.

Diagnostic Aid

Note: The following diagnostic aids apply for both current and history DTCs.

An incorrectly installed CPA or incorrectly seated connector can cause a shorting bar to short both control circuits together. Check the connectors and CPAs if a DTC with symptom byte 02 or 0E is set, to ensure the shorting bars are not causing the circuits to be shorted together. Shorting bars are used in the locations listed below:

- Driver and passenger anchor or retractor pretensioners
- Inline connectors - on the side of the harness connector
- Harness side of the SDM connector

Terminal fretting or incorrectly seated connectors can cause an open/high resistance condition. Check the circuit terminals for fretting or incorrectly seated connector if a DTC with symptom byte 04 or 0D is set. DTCs of deployment loops which are in the seat can occur because of stress or damage to the harness due to seat movement. Move the seat to the full extend of travel while using the scan tool to observe deployment type loop parameters.

If the pretensioner, passenger instrument panel air bags or seat side air bag has inflated under unexpected conditions and/or DTC with symptom byte 01 is set, check both control circuits for a short to voltage.

Reference Information

Schematic Reference

SIR Schematics

Connector End View Reference

Component Connector End Views

Description and Operation

SIR System Description and Operation

Electrical Information Reference

- Circuit Testing
- Testing for Intermittent Conditions and Poor Connections
- Wiring Repairs
- Connector Repairs

Scan Tool Reference

Control Module References for scan tool information

Circuit/System Verification

Note: Refer to SIR Service Precautions .

Inspect all terminals for damage or corrosion when disconnecting connectors. Damage or corrosion in the following requires repair or replacement of the affected component/connector.

- Seat belt retractor pretensioner
- Passenger instrument panel air bag
- Knee air bag
- Seat side air bag
- Roof rail air bag
- SDM
- Seat belt retractor pretensioner wiring harness connector
- Passenger instrument panel air bag wiring harness connector
- Seat side air bag wiring harness connector
- Roof rail air bag wiring harness connector
- SDM wiring harness connector

Note: The connector and connector position assurance (CPA) may seat independently of each other. Both the connector and CPA should seat with an audible and/or tactile click. The CPA isolates the shorting-bars within the connector allowing the deployment circuit to operate properly.

If the condition is intermittent or cannot be duplicated, disconnect the connectors and add Nyogel lubricant 760G. This procedure will correct the high resistance condition due to terminal fretting corrosion.

1. Verify the scan tool Deployment Loop Resistance parameters stay consistently between 2.1 and 4.0 Ω without any spikes or dropouts while moving the harness near each connector listed below:
   - F112 Seat belt retractor pretensioner
   - F113 Seat belt anchor pretensioner
   - Any inline harness
   - K36 SDM

   If less than 2.1 or greater than 4.0 Ω

   Refer to Circuit/System Testing.

   If there are spikes or dropouts, perform the following
   - Inspect each connector terminal and harness for damage or corrosion and repair as necessary
   - Apply Nyogel lubricant 760G to each connector terminal
   - Insure each connector and CPA is correctly seated.

   If within 2.1 and 4.0 Ω without any spikes or dropouts
2. All OK

Circuit/System Testing

1. Vehicle OFF.
2. Disconnect the scan tool.
3. Disconnect the appropriate harness connector listed below:
   - F112 Seat belt retractor pretensioner
   - F113 Seat belt anchor pretensioner
4. Wait for 120 seconds.
5. Test for greater than 25 Ω between the appropriate control circuit terminals 1 and 2.

   If 25 Ω or less

   5.1. Disconnect the X2 harness connector at the K36 SDM.
   5.2. Test for infinite resistance between the two control circuits.
   If less than infinite resistance, repair the short between the two circuits.
   If infinite resistance, replace the K36 SDM.

   If greater than 25 Ω
6. Vehicle in Service Mode.
7. Test for less than 11 V between the control circuit terminals listed below and ground:
   - Control circuit terminal 1
   - Control circuit terminal 2

   If 11 V or greater

   7.1. Vehicle OFF.
   7.2. Disconnect the X2 harness connector at the K36 SDM.
   7.3. Vehicle in Service Mode.
   7.4. Test for less than 1 V between the control circuit and ground.
   If 1 V or greater, repair the short to voltage on the circuit.
   If less than 1 V, replace the K36 SDM.

   If less than 11 V
8. Vehicle OFF.
9. Test for greater than 25 Ω between the control circuit terminals listed below and ground:
   - Control circuit terminal 1
   - Control circuit terminal 2

   If 25 Ω or less

   9.1. Disconnect the X2 harness connector at the K36 SDM.
   9.2. Test for infinite resistance between the control circuit and ground.
   If less than infinite resistance, repair the short to ground on the circuit.
   If infinite resistance, replace the K36 SDM.

If greater than 25 Ω

10. Vehicle OFF.
11. Install a 3 A fused jumper wire between the appropriate control circuit terminals 1 and 2.
12. Vehicle in Service Mode.
13. Verify the scan tool Deployment Loop Resistance parameter is less than 2 Ω.

    If 2 Ω or greater

    13.1. Vehicle OFF.
    13.2. Disconnect the X2 harness connector at the K36 SDM.
    13.3. Test for less than 2 Ω in each control circuit end to end.

    If 2 Ω or greater, repair the open/high resistance in the circuit.

    If less than 2 Ω, replace the K36 SDM.

If less than 2 Ω

14. Replace the appropriate F112 seat belt retractor pretensioner or F113 seat belt anchor pretensioner.

Repair Instructions

Perform the Diagnostic Repair Verification after completing the diagnostic procedure.

- Front Seat Belt Anchor Plate Tensioner Replacement
- Driver or Passenger Seat Retractor Side Belt Replacement
- SIR/SRS Wiring Repairs
- Control Module References for SDM control module replacement, programming and setup

&#169© Copyright Chevrolet. All rights reserved

DTC B0016, B0018, B0023, or B0025

Diagnostic Instructions

- Perform the Diagnostic System Check - Vehicle prior to using this diagnostic procedure.
- Review Strategy Based Diagnosis for an overview of the diagnostic approach.
- Diagnostic Procedure Instructions provides an overview of each diagnostic category.

DTC Descriptors

DTC B0016 01: Left Roof Rail Air Bag Deployment Loop Short to Battery

DTC B0016 02: Left Roof Rail Air Bag Deployment Loop Short to Ground

DTC B0016 04: Left Roof Rail Air Bag Deployment Loop Open

DTC B0016 0D: Left Roof Rail Air Bag Deployment Loop High Resistance

DTC B0016 0E: Left Roof Rail Air Bag Deployment Loop Low Resistance

DTC B0023 01: Right Roof Rail Air Bag Deployment Loop Short to Battery

DTC B0023 02: Right Roof Rail Air Bag Deployment Loop Short to Ground

DTC B0023 04: Right Roof Rail Air Bag Deployment Loop Open

DTC B0023 0D: Right Roof Rail Air Bag Deployment Loop High Resistance

DTC B0023 0E: Right Roof Rail Air Bag Deployment Loop Low Resistance

Diagnostic Fault Information

Circuit	Short to Ground	High Resistance	Open	Short to Voltage	Signal Performance

Left Roof Rail Air Bag High Control	B0016 02, B0016 0E	B0016 0D	B0016 04, B0016 0D	B0016 01	-
Left Roof Rail Air Bag Low Control	B0016 02, B0016 0E	B0016 0D	B0016 04, B0016 0D	B0016 01	-
Right Roof Rail Air Bag High Control	B0023 02, B0023 0E	B0023 0D	B0023 04, B0023 0D	B0023 01	-
Right Roof Rail Air Bag Low Control	B0023 02, B0023 0E	B0023 0D	B0023 04, B0023 0D	B0023 01	--

Circuit/System Description

During a side or frontal crash of sufficient force the inflatable restraint sensing and diagnostic module (SDM) will allow current to flow through the deployment loop in order to deploy an air bag or pretensioner. There are 2 shorting bars which will short together control circuits, when the connector is disconnected. This will help to prevent unwanted deployment of the air bag or pretensioner during servicing.

Conditions for Running the DTC

Ignition voltage is between 9-16 V.

Conditions for Setting the DTC

B0016 01, B0023 01

The air bag control circuit is shorted to voltage for 2 seconds.

B0016 02, B0023 02

The air bag control circuit is shorted to ground for 2 seconds.

B0016 04, B0023 04

The air bag control circuit is open for 2 seconds.

B0016 0D, B0023 0D

The air bag deployment loop resistance is greater than 4.2 Ω for 2 seconds.

B0016 0E, B0023 0E

The air bag deployment loop resistance is less than 1.4 Ω for 2 seconds.

Action Taken When the DTC Sets

- The SDM requests the instrument cluster to illuminate the AIR BAG indicator.
- The SDM will store a DTC, however if an event occurs the system will still attempt deployments.

Conditions for Clearing the DTC

- The condition for setting the DTC no longer exists.
- A history DTC will clear once 100 malfunction-free ignition cycles have occurred.

Diagnostic Aid

Note: The following diagnostic aids apply for both current and history DTCs.

An incorrectly installed CPA or incorrectly seated connector can cause a shorting bar to short both control circuits together. Check the connectors and CPAs if a DTC with symptom byte 02 or 0E is set, to ensure the shorting bars are not causing the circuits to be shorted together. Shorting bars are used in the locations listed below:

- Passenger instrument panel air bag
- Driver and passenger seat side air bags
- Knee air bags
- Left and right roof rail air bags
- Driver and passenger retractor pretensioners
- Inline connectors - on the side of the harness connector
- Harness side of the SDM connector

Terminal fretting or incorrectly seated connectors can cause an open/high resistance condition. Check the circuit terminals for fretting or incorrectly seated connector if a DTC with symptom byte 04 or 0D is set. DTCs of deployment loops which are in the seat DTC can occur because of stress or damage to the harness due to seat movement. Move the seat to the full extend of travel while using the scan tool to observe deployment type loop parameters.

If the pretensioner, passenger instrument panel air bags or seat side air bag has inflated under unexpected conditions and/or DTC with symptom byte 01 is set, check both control circuits for a short to voltage.

Reference Information

Schematic Reference

SIR Schematics

Connector End View Reference

Component Connector End Views

Description and Operation

SIR System Description and Operation

Electrical Information Reference

- Circuit Testing
- Testing for Intermittent Conditions and Poor Connections
- Wiring Repairs
- Connector Repairs

Scan Tool Reference

Control Module References for scan tool information

Circuit/System Verification

Note: Refer to SIR Service Precautions .

Inspect all terminals for damage or corrosion when disconnecting connectors. Damage or corrosion in the following requires repair or replacement of the affected component/connector.

- Seat belt retractor pretensioner
- Passenger instrument panel air bag
- Knee air bag
- Seat side air bag
- Roof rail air bag
- SDM
- Seat belt retractor pretensioner wiring harness connector
- Passenger instrument panel air bag wiring harness connector
- Seat side air bag wiring harness connector
- Roof rail air bag wiring harness connector
- SDM wiring harness connector

Note: The connector and connector position assurance (CPA) may seat independently of each other. Both the connector and CPA should seat with an audible and/or tactile click. The CPA isolates the shorting-bars within the connector allowing the deployment circuit to operate properly.

If the condition is intermittent or cannot be duplicated, disconnect the connectors and add Nyogel lubricant 760G. This procedure will correct the high resistance condition due to terminal fretting corrosion.

1. Verify the scan tool Deployment Loop Resistance parameters stay consistently between 2.1 and 4.0 Ω without any spikes or dropouts while moving the harness near each connector listed below:
   - F105L Roof rail air bag - left
   - F105R Roof rail air bag - right
   - Any inline harness
   - K36 SDM

   If less than 2.1 or greater than 4.0 Ω

   Refer to Circuit/System Testing.

   If there are spikes or dropouts, perform the following
   - Inspect each connector terminal and harness for damage or corrosion and repair as necessary
   - Apply Nyogel lubricant 760G to each connector terminal
   - Insure each connector and CPA is correctly seated.

   If within 2.1 and 4.0 Ω without any spikes or dropouts
2. All OK

Circuit/System Testing

1. Vehicle OFF.
2. Disconnect the scan tool.
3. Disconnect the appropriate harness connector listed below:
   - F105L Roof rail air bag - left
   - F105R Roof rail air bag - right
4. Wait for 120 seconds.
5. Test for greater than 25 Ω between the control circuit terminals 1 and 2.

   If 25 Ω or less

   5.1. Disconnect the X2 harness connector at the K36 SDM.

   5.2. Test for infinite resistance between the two control circuits.

   If less than infinite resistance, repair the short between the two circuits.

   If infinite resistance, replace the K36 SDM.

   If greater than 25 Ω
6. Vehicle in Service Mode.
7. Test for less than 11 V between the control circuit terminals listed below and ground:
   - Control circuit terminal 1

- Control circuit terminal 2

If 11 V or greater

7.1. Vehicle OFF.
7.2. Disconnect the X2 harness connector at the K36 SDM.
7.3. Vehicle in Service Mode.
7.4. Test for less than 1 V between the control circuit and ground.
If 1 V or greater, repair the short to voltage on the circuit.
If less than 1 V, replace the K36 SDM.

If less than 11 V

8. Vehicle OFF.
9. Test for greater than 25 Ω between the control circuit terminals listed below and ground:
   - Control circuit terminal 1
   - Control circuit terminal 2

If 25 Ω or less

9.1. Disconnect the X2 harness connector at the K36 SDM.
9.2. Test for infinite resistance between the control circuit and ground.
If less than infinite resistance, repair the short to ground on the circuit.
If infinite resistance, replace the K36 SDM.

If greater than 25 Ω

10. Vehicle OFF.
11. Install a 3 A fused jumper wire between the appropriate control circuit terminals 1 and 2.
12. Vehicle in Service Mode.
13. Verify the scan tool Deployment Loop Resistance parameter is less than 2 Ω.

If 2 Ω or greater

13.1. Vehicle OFF.
13.2. Disconnect the X2 harness connector at the K36 SDM.
13.3. Test for less than 2 Ω in each control circuit end to end.
If 2 Ω or greater, repair the open/high resistance in the circuit.
If less than 2 Ω, replace the K36 SDM.

If less than 2 Ω

14. Replace the appropriate F105L roof rail air bag - left or F015R roof rail air bag - right.

Repair Instructions

Perform the Diagnostic Repair Verification after completing the diagnostic procedure.

- Roof Side Rail Inflatable Restraint Module Replacement

- SIR/SRS Wiring Repairs
- Control Module References for SDM control module replacement, programming and setup

&#169© Copyright Chevrolet. All rights reserved

DTC B0017 or B0024

Diagnostic Instructions

- Perform the Diagnostic System Check - Vehicle prior to using this diagnostic procedure.
- Review Strategy Based Diagnosis for an overview of the diagnostic approach.
- Diagnostic Procedure Instructions provides an overview of each diagnostic category.

DTC Descriptors

DTC B0017 01: Driver Knee Air Bag Deployment Loop Short to Battery

DTC B0017 02: Driver Knee Air Bag Deployment Loop Short to Ground

DTC B0017 04: Driver Knee Air Bag Deployment Loop Open

DTC B0017 0D: Driver Knee Air Bag Deployment Loop High Resistance

DTC B0017 0E: Driver Knee Air Bag Deployment Loop Low Resistance

DTC B0024 01: Passenger Knee Air Bag Deployment Loop Short to Battery

DTC B0024 02: Passenger Knee Air Bag Deployment Loop Short to Battery

DTC B0024 04: Passenger Knee Air Bag Deployment Loop Open

DTC B0024 0D: Passenger Knee Air Bag Deployment Loop High Resistance

DTC B0024 0E: Passenger Knee Air Bag Deployment Loop Low Resistance

Diagnostic Fault Information

Circuit	Short to Ground	High Resistance	Open	Short to Voltage	Signal Performance

Driver Knee Air Bag High Control	B0017 02, B0017 0E	B0017 0D	B0017 04, B0017 0D	B0017 01	-
Driver Knee Air Bag Low Control	B0017 02, B0017 0E	B0017 0D	B0017 04, B0017 0D	B0017 01	-
Passenger Knee Air Bag High Control	B0024 02, B0024 0E	B0024 0D	B0024 04, B0024 0D	B0024 01	-
Passenger Knee Air Bag Low Control	B0024 02, B0024 0E	B0024 0D	B0024 04, B0024 0D	B0024 01	--

Circuit/System Description

During a side or frontal crash of sufficient force the inflatable restraint sensing and diagnostic module (SDM) will allow current to flow through the deployment loop in order to deploy an air bag. There are 2 shorting bars used within the connector that will short together the control circuits, when the connector is disconnected. This will help to prevent unwanted deployment of the air bag or retractor pretensioner during servicing.

Conditions for Running the DTC

Ignition voltage is between 9-16 V.

Conditions for Setting the DTC

B0017 01, B0024 01

The air bag control circuit is shorted to voltage for 2 seconds.

B0017 02, B0024 02

The air bag control circuit is shorted to ground for 2 seconds.

B0017 04, B0024 04

The air bag control circuit is open for 2 seconds.

B0017 0D, B0024 0D

The air bag deployment loop resistance is greater than 4.2 Ω for 2 seconds.

B0017 0E, B0024 0E

The air bag deployment loop resistance is less than 1.4 Ω for 2 seconds.

Action Taken When the DTC Sets

- The SDM requests the instrument cluster to illuminate the AIR BAG indicator.
- The SDM will store a DTC, however if an event occurs the system will still attempt deployments.

Conditions for Clearing the DTC

- The condition for setting the DTC no longer exists.
- A history DTC will clear once 100 malfunction-free ignition cycles have occurred.

Diagnostic Aid

Note: The following diagnostic aids apply for both current and history DTCs.

An incorrectly installed CPA or incorrectly seated connector can cause a shorting bar to short both control circuits together. Check the connectors and CPAs if a DTC with symptom byte 02 or 0E is set, to ensure the shorting bars are not causing the circuits to be shorted together. Shorting bars are used in the locations listed below:

- Driver and passenger knee air bags
- Inline connectors - on the side of the harness connector
- Harness side of the SDM connector

Terminal fretting or incorrectly seated connector can cause an open/high resistance condition. Check the circuit terminals for fretting or incorrectly seated connector if a DTC with symptom byte 04 or 0D is set. DTCs of deployment loops which are in the seat can occur because of stress or damage to the harness due to seat movement. Move the seat to the full extend of travel while using the scan tool to observe deployment type loop parameters.

If the retractor pretensioner, passenger instrument panel air bags, knee air bags, roof rail air bags, or seat side air bag has inflated under unexpected conditions and/or DTC with symptom byte 01 is set, check both control circuits for a short to voltage.

Reference Information

Schematic Reference

SIR Schematics

Connector End View Reference

Component Connector End Views

Description and Operation

SIR System Description and Operation

Electrical Information Reference

- Circuit Testing
- Testing for Intermittent Conditions and Poor Connections
- Wiring Repairs
- Connector Repairs

Scan Tool Reference

Control Module References for scan tool information

Circuit/System Verification

Note: Refer to SIR Service Precautions .

Inspect all terminals for damage or corrosion when disconnecting connectors. Damage or corrosion in the following requires repair or replacement of the affected component/connector.

- Seat belt retractor pretensioner
- Passenger instrument panel air bag
- Knee air bag
- Seat side air bag
- Roof rail air bag
- SDM
- All wiring harness connectors
- SDM wiring harness connector

Note: The connector and connector position assurance (CPA) may seat independently of each other. Both the connector and CPA should seat with an audible and/or tactile click. The CPA isolates the shorting-bars within the connector allowing the deployment circuit to operate properly.

If the condition is intermittent or cannot be duplicated, disconnect the connectors and add Nyogel lubricant 760G. This procedure will correct the high resistance condition due to terminal fretting corrosion.

1. Verify the scan tool Deployment Loop Resistance parameters stay consistently between 2.1 and 4.0 Ω without any spikes or dropouts while moving the harness near each connector listed below:
   - F114D Knee air bag - driver
   - F114P Knee air bag - passenger
   - Any inline harness

- K36 SDM

If less than 2.1 or greater than 4.0 Ω

Refer to Circuit/System Testing.

If there are spikes or dropouts, perform the following

- Inspect each connector terminal and harness for damage or corrosion and repair as necessary
- Apply Nyogel lubricant 760G to each connector terminal
- Insure each connector and CPA is correctly seated.

If within 2.1 and 4.0 Ω without any spikes or dropouts

2. All OK

Circuit/System Testing

1. Vehicle OFF, disconnect the scan tool, disconnect the appropriate F114 knee air bag harness connector, and then wait for 120 seconds.
2. Test for greater than 25 Ω between the appropriate control circuit terminals 1 and 2.

If 25 Ω or less

2.1. Disconnect the X1 harness connector at the K36 SDM.

2.2. Test for infinite resistance between the two control circuits.

If less than infinite resistance, repair the short between the two circuits.

If infinite resistance, replace the K36 SDM.

If greater than 25 Ω

3. Vehicle in Service Mode.
4. Test for less than 11 V between the control circuit terminals listed below and ground:
   - Control circuit terminal 1
   - Control circuit terminal 2

If 11 V or greater

4.1. Vehicle OFF, disconnect the X1 harness connector at the K36 SDM, Vehicle in Service Mode.

4.2. Test for less than 1 V between the control circuit and ground.

If 1 V or greater, repair the short to voltage on the circuit.

If less than 1 V, replace the K36 SDM.

If less than 11 V

5. Vehicle OFF.
6. Test for greater than 25 Ω between the control circuit terminals listed below and ground:
   - Control circuit terminal 1
   - Control circuit terminal 2

If 25 Ω or less

6.1. Disconnect the X1 harness connector at the K36 SDM.

6.2. Test for infinite resistance between the control circuit and ground.
If less than infinite resistance, repair the short to ground on the circuit.
If infinite resistance, replace the K36 SDM.

If greater than 25 Ω

7. Vehicle OFF, install a 3 A fused jumper wire between the control circuit terminals 1 and 2.
8. Verify the scan tool Deployment Loop Resistance parameter is less than 2 Ω.

If 2 Ω or greater

8.1. Vehicle OFF, disconnect the X1 harness connector at the K36 SDM.
8.2. Test for less than 2 Ω in each control circuit end to end.
If 2 Ω or greater, repair the open/high resistance in the circuit.
If less than 2 Ω, replace the K36 SDM.

If less than 2 Ω

9. Replace the appropriate F114 knee air bag.

Repair Instructions

Perform the Diagnostic Repair Verification after completing the diagnostic procedure.

- Inflatable Restraint Instrument Panel Lower Module Replacement - Driver Side
- Inflatable Restraint Instrument Panel Lower Module Replacement - Passenger Side
- Control Module References for SDM control module replacement, programming and setup

&#169© Copyright Chevrolet. All rights reserved

DTC B0019 or B0020

Diagnostic Instructions

- Perform the Diagnostic System Check - Vehicle prior to using this diagnostic procedure.
- Review Strategy Based Diagnosis for an overview of the diagnostic approach.
- Diagnostic Procedure Instructions provides an overview of each diagnostic category.

DTC Descriptors

DTC B0019 01: Passenger Instrument Panel Air Bag Deployment Loop Stage 1 Short to Battery

DTC B0019 02: Passenger Instrument Panel Air Bag Deployment Loop Stage 1 Short to Ground

DTC B0019 04: Passenger Instrument Panel Air Bag Deployment Loop Stage 1 Open

DTC B0019 0D: Passenger Instrument Panel Air Bag Deployment Loop Stage 1 High Resistance

DTC B0019 0E: Passenger Instrument Panel Air Bag Deployment Loop Stage 1 Low Resistance

DTC B0020 01: Passenger Instrument Panel Air Bag Deployment Loop Stage 2 Short to Battery

DTC B0020 02: Passenger Instrument Panel Air Bag Deployment Loop Stage 2 Short to Ground

DTC B0020 04: Passenger Instrument Panel Air Bag Deployment Loop Stage 2 Open

DTC B0020 0D: Passenger Instrument Panel Air Bag Deployment Loop Stage 2 High Resistance

DTC B0020 0E: Passenger Instrument Panel Air Bag Deployment Loop Stage 2 Low Resistance

Diagnostic Fault Information

Circuit	Short to Ground	High Resistance	Open	Short to Voltage	Signal Performance

Passenger Instrument Panel Air Bag Stage 1 High Control	B0019 02, B0019 0E	B0019 0D	B0019 04, B0019 0D	B0019 01	-
Passenger Instrument Panel Air Bag Stage 1 Low Control	B0019 02, B0019 0E	B0019 0D	B0019 04, B0019 0D	B0019 01	-
Passenger Instrument Panel Air Bag Stage 2 High Control	B0020 02, B0020 0E	B0020 0D	B0020 04, B0020 0D	B0020 01	-
Passenger Instrument Panel Air Bag Stage 2 Low Control	B0020 02, B0020 0E	B0020 0D	B0020 04, B0020 0D	B0020 01	--

Circuit/System Description

During a side or frontal crash of sufficient force the inflatable restraint sensing and diagnostic module (SDM) will allow current to flow through the deployment loop in order to deploy an air bag or pretensioner. There are 2 shorting bars which will short together control circuits, when the connector is disconnected. This will help to prevent unwanted deployment of the air bag or pretensioner during servicing.

Conditions for Running the DTC

Ignition voltage is between 9-16 V.

Conditions for Setting the DTC

B0019 01, B0020 01

The air bag control circuit is shorted to voltage for 2 seconds.

B0019 02, B0020 02

The air bag control circuit is shorted to ground for 2 seconds.

B0019 04, B0020 04

The air bag control circuit is open for 2 seconds.

B0019 0D, B0020 0D

The air bag deployment loop resistance is greater than 4.2 Ω for 2 seconds.

B0019 0E, B0020 0E

The air bag deployment loop resistance is less than 1.4 Ω for 2 seconds.

Action Taken When the DTC Sets

- The SDM requests the instrument cluster to illuminate the AIR BAG indicator.
- The SDM will store a DTC, however if an event occurs the system will still attempt deployments.

Conditions for Clearing the DTC

- The condition for setting the DTC no longer exists.
- A history DTC will clear once 100 malfunction-free ignition cycles have occurred.

Diagnostic Aid

Note: The following diagnostic aids apply for both current and history DTCs.

An incorrectly installed CPA or incorrectly seated connector can cause a shorting bar to short both control circuits together. Check the connectors and CPAs if a DTC with symptom byte 02 or 0E is set, to ensure the shorting bars are not causing the circuits to be shorted together. Shorting bars are used in the locations listed below:

- Passenger instrument panel air bag
- Inline connectors - on the side of the harness connector
- Harness side of the SDM connector

Terminal fretting or incorrectly seated connectors can cause an open/high resistance condition. Check the circuit terminals for fretting or incorrectly seated connector if a DTC with symptom byte 04 or 0D is set. DTCs of deployment loops which are in the seat can occur because of stress or damage to the harness due to seat movement. Move the seat to the full extend of travel while using the scan tool to observe deployment type loop parameters.

If the pretensioner, passenger instrument panel air bags or seat side air bag has inflated under unexpected conditions and/or DTC with symptom byte 01 is set, check both control circuits for a short to voltage.

Reference Information

Schematic Reference

SIR Schematics

Connector End View Reference

Component Connector End Views

Description and Operation

SIR System Description and Operation

Electrical Information Reference

- Circuit Testing
- Testing for Intermittent Conditions and Poor Connections
- Wiring Repairs
- Connector Repairs

Scan Tool Reference

Control Module References for scan tool information

Circuit/System Verification

Note: Refer to SIR Service Precautions .

Inspect all terminals for damage or corrosion when disconnecting connectors. Damage or corrosion in the following requires repair or replacement of the affected component/connector.

- Seat belt retractor pretensioner
- Passenger instrument panel air bag
- Knee air bag
- Seat side air bag
- Roof rail air bag
- SDM
- Seat belt retractor pretensioner wiring harness connector
- Passenger instrument panel air bag wiring harness connector
- Seat side air bag wiring harness connector
- Roof rail air bag wiring harness connector
- SDM wiring harness connector

Note: The connector and connector position assurance (CPA) may seat independently of each other. Both the connector and CPA should seat with an audible and/or tactile click. The CPA isolates the shorting-bars within the connector allowing the deployment circuit to operate properly.

If the condition is intermittent or cannot be duplicated, disconnect the connectors and add Nyogel lubricant 760G. This procedure will correct the high resistance condition due to terminal fretting corrosion.

1. Verify the scan tool Deployment Loop Resistance parameters stay consistently between 2.1 and 4.0 Ω without any spikes or dropouts while moving the harness near each connector listed below:

- F105 Passenger instrument panel air bag
- Any inline harness
- K36 SDM

If less than 2.1 or greater than 4.0 Ω

Refer to Circuit/System Testing.

If there are spikes or dropouts, perform the following

- Inspect each connector terminal and harness for damage or corrosion and repair as necessary
- Apply Nyogel lubricant 760G to each connector terminal
- Insure each connector and CPA is correctly seated.

If within 2.1 and 4.0 Ω without any spikes or dropouts

2. All OK

Circuit/System Testing

1. Vehicle OFF.
2. Disconnect the scan tool.
3. Disconnect the harness connector X225.
4. Test for greater than 25 Ω between the appropriate control circuit terminals listed below on the SDM side of the connector:
   - F105 Passenger instrument panel airbag stage 1 X225 terminal 1 and 2
   - F105 Passenger instrument panel airbag stage 2 X225 terminal 3 and 4

   If 25 Ω or less

   4.1. Disconnect the X1 harness connector at the K36 SDM.
   4.2. Test for infinite resistance between the two control circuits.
   If less than infinite resistance, repair the short between the two circuits.
   If infinite resistance, replace the K36 SDM.

   If greater than 25 Ω
5. Vehicle in Service Mode.
6. Test for less than 11 V between the control circuit terminals listed below and ground:
   - X225 control circuit terminal 1
   - X225 control circuit terminal 2
   - X225 control circuit terminal 3
   - X225 control circuit terminal 4

   If 11 V or greater

   6.1. Vehicle OFF.
   6.2. Disconnect the X1 harness connector at the K36 SDM.

6.3. Vehicle in Service Mode.
6.4. Test for less than 1 V between the control circuit and ground.
If 1 V or greater, repair the short to voltage on the circuit.
If less than 1 V, replace the K36 SDM.

If less than 11 V

7. Test for greater than 25 Ω between the control circuit terminals listed below and ground:
   - X225 control circuit terminal 1
   - X225 control circuit terminal 2
   - X225 control circuit terminal 3
   - X225 control circuit terminal 4

   If 25 Ω or less

   7.1. Disconnect the X1 harness connector at the K36 SDM.
   7.2. Test for infinite resistance between the control circuit and ground.
   If less than infinite resistance, repair the short to ground on the circuit.
   If infinite resistance, replace the K36 SDM.

If greater than 25 Ω

8. Vehicle OFF.
9. Install a 3 A fused jumper wire between the control circuit terminals listed below:
   - F105 Passenger instrument panel airbag stage 1 X225 terminal 1 and 2
   - F105 Passenger instrument panel airbag stage 2 X225 terminal 3 and 4
10. Vehicle in Service Mode.
11. Verify the scan tool Deployment Loop Resistance parameter is less than 2 Ω.

    If 2 Ω or greater

    11.1. Vehicle OFF.
    11.2. Disconnect the X1 harness connector at the K36 SDM.
    11.3. Test for less than 2 Ω in each control circuit end to end.
    If 2 Ω or greater, repair the open/high resistance in the circuit.
    If less than 2 Ω, replace the K36 SDM.

If less than 2 Ω

12. Vehicle OFF.
13. Reconnect harness connector X225.
14. Disconnect the F105 Passenger instrument panel air bag harness connector X1.
15. Vehicle in Service Mode.
16. Test for less than 11 V between the control circuit terminals listed below and ground:
    - Terminal 1
    - Terminal 2

- Terminal 3
- Terminal 4

If 11 V or greater

Repair the short to voltage on the circuit.

If less than 11 V

17. Vehicle OFF.
18. Test for greater than 25 Ω between the control circuit terminals listed below and ground:
    - Terminal 1
    - Terminal 2
    - Terminal 3
    - Terminal 4

    If 25 Ω or less

    Repair the short to ground on the circuit.

    If greater than 25 Ω
19. Vehicle OFF.
20. Test for less than 5 Ω between the control circuit terminals listed below:
    - X225 control circuit terminal 1 and F105 Passenger Instrument Panel air bag harness connector control circuit terminal 1 X1
    - X225 control circuit terminal 2 and F105 Passenger instrument panel air bag harness connector control circuit terminal 2 X1
    - X225 control circuit terminal 3 and F105 Passenger instrument panel air bag harness connector control circuit terminal 3 X1
    - X225 control circuit terminal 4 and F105 Passenger instrument panel air bag harness connector control circuit terminal 4 X1

    If greater than 5 Ω

    Repair the open/high resistance in the circuit.

    If less than 5 Ω
21. Replace the F105 passenger instrument panel air bag.

Repair Instructions

Perform the Diagnostic Repair Verification after completing the diagnostic procedure.

- Instrument Panel Inflatable Restraint Module Replacement
- SIR/SRS Wiring Repairs
- Control Module References for SDM control module replacement, programming and setup

&#169© Copyright Chevrolet. All rights reserved

DTC B0052

Diagnostic Instructions

- Perform the Diagnostic System Check - Vehicle prior to using the diagnostic procedure.
- Review Strategy Based Diagnosis for an overview of the diagnostic approach.
- Diagnostic Procedure Instructions provides an overview of each diagnostic category.

DTC Descriptors

DTC B0052 00: Deployment Commanded Malfunction

DTC B0052 56: Deployment Commanded Too Many Transitions

Circuit/System Description

The inflatable restraint sensing and diagnostic module (SDM) senses vehicle impacts and provides deployment signals to the air bags and anchor and/or retractor pretensioners when warranted. The SDM sets DTC B0052 after each command for deployment. DTC B0052 will latch and not clear until after 3 commanded deployments by the SDM. And therefore the SDM has to be replaced using end of life disposal procedure.

Conditions for Running the DTC

Ignition voltage is between 9-16 V.

Conditions for Setting the DTC

- The SDM detects a frontal impact of sufficient force to warrant deployment of the frontal air bags.
- The SDM detects a side impact or rollover (if equipped) of sufficient force to warrant deployment of a seat side air bag and/or roof rail air bag.

Action Taken When the DTC Sets

The SDM requests the instrument cluster to illuminate the AIR BAG indicator.

Conditions for Clearing the DTC

- DTC B0052 00 is a clearable DTC and may be cleared with a scan tool without replacing the SDM.
- DTC B0052 56 is a latched DTC. The DTC cannot be cleared with the scan tool. Replacement of the SDM is required.

Reference Information

Schematic Reference

SIR Schematics

Connector End View Reference

Component Connector End Views

Electrical Information Reference

- Circuit Testing
- Connector Repairs
- Testing for Intermittent Conditions and Poor Connections
- Wiring Repairs

Scan Tool Reference

Control Module References for scan tool information

Circuit/System Verification

1. Vehicle in Service Mode. With a scan tool, verify that DTC B0052 00 is not set.
   If DTC B0052 00 is set.
   Clear the DTC.
   If DTC B0052 00 is not set.
2. Verify that DTC B0052 56 is not set.
   If DTC B0052 56 is set.
   Replace the K36 SDM.
   If DTC B0052 56 is not set.
3. All OK

Repair Instructions

Perform the Diagnostic Repair Verification after completing the diagnostic procedure.

Control Module References for SDM control module replacement, programming and setup

&#169© Copyright Chevrolet. All rights reserved

DTC B0083 or B0084

Diagnostic Instructions

- Perform the Diagnostic System Check - Vehicle prior to using this diagnostic procedure.
- Review Strategy Based Diagnosis for an overview of the diagnostic approach.
- Diagnostic Procedure Instructions provides an overview of each diagnostic category.

DTC Descriptors

DTC B0083 02: Left Front Impact Sensor Short to Ground

DTC B0083 05: Left Front Impact Sensor High Voltage/Open

DTC B0083 39: Left Front Impact Sensor Internal Electronic Failure

DTC B0083A 3A: Left Front Impact Sensor Incorrect Component Installed

DTC B0083 71: Left Front Impact Sensor Invalid Serial Data Received

DTC B0084 02: Right Front Impact Sensor Short to Ground

DTC B0084 04: Right Front Impact Sensor Open

DTC B0084 39: Right Front Impact Sensor Internal Electronic Failure

DTC B0084A 3A: Right Front Impact Sensor Incorrect Component Installed

DTC B0084 71: Right Front Impact Sensor Invalid Serial Data Received

Diagnostic Fault Information

Circuit	Short to Ground	Open/High Resistance	Short to Voltage	Signal Performance

Left Front Impact Sensor High Signal	B0083 02	B0083 05	B0083 05	B0083 3A
Left Front Impact Sensor Low Reference	B0083 02	B0083 05	B0083 05	B0083 3A
Right Front Impact Sensor High Signal	B0084 02	B0084 05	B0084 05	B0084 3A
Right Front Impact Sensor Low Signal	B0084 02	B0084 05	B0084 05	B0084 3A

Circuit/System Description

The impact sensors are equipped on vehicles to supplement the supplemental inflatable restraint (SIR) system performance. The impact sensors are electronic and are not part of the deployment loops, but instead provide inputs to the sensing and diagnostic module (SDM). The impact sensors can assist in determining the severity of some frontal and side collisions. The SDM uses the input from the impact sensors to assist in determining the severity of a collision further supporting air bag deployment. If the SDM determines a deployment is warranted, the SDM will cause current to flow through the deployment loops deploying the air bags.

Conditions for Running the DTC

Ignition voltage is between 9-16 V.

Conditions for Setting the DTC

Any of the following conditions exist for 10 seconds:

B0083 02, B0084 02

- The sensor has been shorted to ground.
- The sensor current is greater than 23 mA for greater than 5 milliseconds.

B0083 05, B0084 05

- The sensor circuit is open.
- The SDM has not received a message from the sensor for greater than 375 milliseconds.

B0083 39, B0084 39

- The SDM has received a Not OK message from the sensor.
- The SDM has not received a message.

B0083 3A, B0084 3A

- The SDM has received identification message from the sensor, which does not match the identification stored in the SDM memory.

- The SDM has reset the impact sensor twice without detecting the correct identification message.

B0083 71, B0084 71

The SDM has received invalid serial data from the sensor.

Action Taken When the DTC Sets

The SDM requests the instrument panel cluster to illuminate the AIR BAG indicator.

Conditions for Clearing the DTC

- The condition for setting the DTC no longer exists.
- A history DTC will clear once 100 malfunction-free ignition cycles have occurred.
- An ignition cycle is required for the DTC to go from current to history.

Reference Information

Schematic Reference

SIR Schematics

Connector End View Reference

Component Connector End Views

Description and Operation

SIR System Description and Operation

Electrical Information Reference

- Circuit Testing
- Testing for Intermittent Conditions and Poor Connections
- Connector Repairs
- Wiring Repairs

Scan Tool Reference

Control Module References for scan tool information

Circuit/System Verification

Note: Refer to SIR Service Precautions .

Inspect all terminals for damage or corrosion when disconnecting connectors. Damage or corrosion in the following requires repair or replacement of the affected component/connector.

- Front impact sensor
- Side impact sensor
- SDM
- Front impact sensor wiring harness connector
- Side impact sensor wiring harness connector
- SDM wiring harness connector

Note: The connector and connector position assurance (CPA) may seat independently of each other. Both the connector and CPA should seat with an audible and/or tactile click. The CPA isolates the shorting-bars within the connector allowing the deployment circuit to operate properly. Replace any CPA that is damaged or missing.

If the condition is intermittent or cannot be duplicated, disconnect the connectors and add Nyogel lubricant 760G. This procedure will correct the high resistance condition due to terminal fretting corrosion.

1. Vehicle in Service Mode. With a scan tool, verify that DTC B0083 or B0084 symptom byte 39 or 71 is not set as current.
   If DTC B0083 or B0084 symptom byte 39 or 71 is set as current
   Replace the appropriate B59 impact sensor.
   If DTC B0083 or B0084 symptom byte 39 or 71 is not set as current
2. Verify that DTC B00083 or B0084 symptom byte 3A is not set as current.
   If DTC B00083 or B0084 symptom byte 3A is set as current
   Replace the incorrect B59 front impact sensor
   If DTC B00083 or B0084 symptom byte 3A is not set as current
3. Verify that DTC B0083 or B0084 symptom byte 02 or 05 is not set as current.
   If DTC B0083 or B0084 symptom byte 02 or 05 is set as current
   Refer to Circuit/System Testing.
   If DTC B0083 or B0084 symptom byte 02 or 05 is not set as current
4. All OK.

Circuit/System Testing

1. Vehicle OFF. Disconnect the harness connector at the appropriate B59 impact sensor. It may take up to 2 minutes for all vehicle systems to power down.
2. Test for less than 10 Ω between the low reference circuit terminal 2 and ground.

   If 10 Ω or greater

   2.1. Vehicle OFF, disconnect the X2 harness connector at the K36 SDM.
   2.2. Test for less than 2 Ω in the low reference circuit end to end.
   If 2 Ω or greater, repair the open/high resistance in the circuit.
   If less than 2 Ω, replace the K36 SDM.

   If less than 10 Ω
3. Vehicle in Service Mode.
4. Test for less than 11 V between the signal circuit terminal 1 and ground.

   If 11 V or greater

   4.1. Vehicle OFF. Disconnect the X2 harness connector at the K36 SDM. Vehicle in Service Mode.
   4.2. Test for less than 1 V between the signal circuit terminal 1 and ground.
   If 1 V or greater, repair the short to voltage on the circuit.
   If less than 1 V, replace the K36 SDM.

   If less than 1 V
5. Vehicle OFF. Test for greater than 50k Ω between the signal circuit terminal 1 and ground.

   If 50k Ω or less

   5.1. Disconnect the X2 harness connector at the K36 SDM.
   5.2. Test for infinite resistance between the signal circuit and ground.
   If less than infinite resistance, repair the short to ground on the circuit.
   If infinite resistance, replace the K36 SDM.

   If greater than 50k Ω
6. Disconnect the X2 harness connector at the SDM.
7. Test for less than 2 Ω between the signal circuit end to end from the B59 front impact sensor terminal 1 and the K36 SDM terminal listed below:
   - Right front impact sensor terminal 26 X2
   - Left front impact sensor terminal 23 X2

   If 2 Ω or greater
8. Repair the short to voltage or an open/high resistance in the circuit.

   If less than 2 Ω
9. Verify that the K36 SDM calibrations match the VIN data, software part number, and calibration part number.

   If the K36 SDM calibrations do not match the VIN data

   Program the K36 SDM, refer to Inflatable Restraint Sensing and Diagnostic Module Programming and Setup .

   If the K36 SDM calibrations match the VIN data
10. Replace the B59 front impact sensor.
11. Operate the vehicle under the conditions for setting the DTC. The DTC should not be set.

    If the DTC sets

Replace the K36 SDM

If the DTC does not set

12. All OK.

Repair Instructions

Perform the Diagnostic Repair Verification after completing the repair.

- Front End Inflatable Restraint Discriminating Sensor Replacement
- Control Module References for SDM control module replacement, programming and setup

&#169© Copyright Chevrolet. All rights reserved

DTC B0085 or B0088

Diagnostic Instructions

- Perform the Diagnostic System Check - Vehicle prior to using this diagnostic procedure.
- Review Strategy Based Diagnosis for an overview of the diagnostic approach.
- Diagnostic Procedure Instructions provides an overview of each diagnostic category.

DTC Descriptors

DTC B0085 02: Left Front Side Impact Sensor Short to Ground

DTC B0085 05: Left Front Side Impact Sensor High Voltage/Open

DTC B0085 39: Left Front Side Impact Sensor Internal Malfunction

DTC B0085 3A: Left Front Side Impact Sensor Incorrect Component Installed

DTC B0085 71: Left Front Side Impact Sensor Invalid Data

DTC B0088 02: Right Rear Side Impact Sensor Short to Ground

DTC B0088 05: Right Rear Side Impact Sensor High Voltage/Open

DTC B0088 39: Right Rear Side Impact Sensor Internal Malfunction

DTC B0088 3A: Right Rear Side Impact Sensor Incorrect Component Installed

DTC B0088 71: Right Rear Side Impact Sensor Invalid Data

Diagnostic Fault Information

Circuit	Short to Ground	Open/High Resistance	Short to Voltage	Signal Performance

Left Front Side Impact Sensor High Signal	B0085 02, B0088 02	B0085 05	B0085 05, B0088 05	B0085 39
Left Front Side Impact Sensor Low Reference	B0085 02, B0088 02	B0085 05	B0085 05, B0088 05	B0085 39
Right Rear Side Impact Sensor High Signal	B0085 02, B0088 02	B0088 05	B0085 05, B0088 05	B0088 39
Right Rear Side Impact Sensor Low Reference	B0085 02, B0088 02	B0088 05	B0085 05, B0088 05	B0088 39

Circuit/System Description

The impact sensors are equipped on vehicles to supplement the supplemental inflatable restraint (SIR) system performance. The impact sensors are electronic and are not part of the deployment loops, but instead provide inputs to the sensing and diagnostic module (SDM). The impact sensors can assist in determining the severity of some frontal and side collisions. The SDM uses the input from the impact sensors to assist in determining the severity of a collision further supporting air bag deployment. If the SDM determines a deployment is warranted, the SDM will cause current to flow through the deployment loops deploying the air bags.

Conditions for Running the DTC

Ignition voltage is between 9-16 V.

Conditions for Setting the DTC

Any of the following conditions exist for 10 seconds:

B0085 02, B0088 02

- The sensor has been shorted to ground.
- The sensor current is greater than 23 mA for greater than 5 milliseconds.

B0085 05, B0088 05

- The sensor circuit is open.
- The SDM has not received a message from the sensor for greater than 375 milliseconds.

B0085 39, B0088 39

- The SDM has received a Not OK message from the sensor.
- The SDM has not received a message.

B0085 3A, B0088 3A

- The SDM has received identification message from the sensor, which does not match the identification stored in the SDM memory.

- The SDM has reset the impact sensor twice without detecting the correct identification message.

B0085 71, B0088 71

The SDM has received invalid serial data from the sensor.

Action Taken When the DTC Sets

The SDM requests the instrument panel cluster to illuminate the AIR BAG indicator.

Conditions for Clearing the DTC

- The condition for setting the DTC no longer exists.
- A history DTC will clear once 100 malfunction-free ignition cycles have occurred.
- An ignition cycle is required for the DTC to go from current to history.

Reference Information

Schematic Reference

SIR Schematics

Connector End View Reference

Component Connector End Views

Description and Operation

SIR System Description and Operation

Electrical Information Reference

- Circuit Testing
- Testing for Intermittent Conditions and Poor Connections
- Connector Repairs
- Wiring Repairs

Scan Tool Reference

Control Module References for scan tool information

Circuit/System Verification

Note: Refer to SIR Service Precautions

Inspect all terminals for damage or corrosion when disconnecting connectors. Damage or corrosion in the following requires repair or replacement of the affected component/connector.

- Side impact sensor
- SDM
- Front impact sensor wiring harness connector
- Side impact sensor wiring harness connector
- SDM wiring harness connector

Note: The connector and connector position assurance (CPA) may seat independently of each other. Both the connector and CPA should seat with an audible and/or tactile click. The CPA isolates the shorting-bars within the connector allowing the deployment circuit to operate properly. Replace any CPA that is damaged or missing.

If the condition is intermittent or cannot be duplicated, disconnect the connectors and add Nyogel lubricant 760G. This procedure will correct the high resistance condition due to terminal fretting corrosion.

1. Verify that DTC B0085 or B0088 symptom byte 39 or 71 is not set as current.
   If DTC B0085 or B0088 symptom byte 39 or 71 is set as current
   Replace the sensor listed below:
   - B0085 - B63LF side impact sensor-left front
   - B0088 - B63RR side impact sensor-right rear

   If DTC B0085 or B0088 symptom byte 39 or 71 is not set as current
2. Verify that DTC B0085 or B0088 symptom byte 3A is not set as current.
   If DTC B0085 or B0088 symptom byte 3A is set as current
   Replace the incorrect B63 side impact sensor

   If DTC B0085 or B0088 symptom byte 3A is not set as current
3. Verify that DTC B0085 or B0088 symptom byte 02 or 05 is set as current.
   If only DTC B0085 symptom byte 02 or 05 is set as current
   Refer to Circuit/System Testing - Only DTC B0085 or B0088 is set.
   If only DTC B0088 symptom byte 02 or 05 is set as current
   Refer to Circuit/System Testing - Only DTC B0085 or B0088 is set.
   If both DTC B0085 or B0088 symptom byte 02 or 05 is set as current
   Refer to Circuit/System Testing - Both DTC B0085 and B0088 are set.

If DTC B0085 or B0088 symptom byte 02 or 05 is not set as current

4. All OK.

Circuit/System Testing

Note: The signal circuit is shared at the K36 SDM between the B63LF side impact sensor left front and the B63RR side impact sensor right rear (DTC B0085 and DTC B0088). Therefore a short to ground or short to voltage in either of these signal circuits can set a DTC for both circuits, and an open in either circuit should only set its corresponding DTC.

Only DTC B0085 or B0088 is set

1. Vehicle OFF, disconnect the harness connector at the appropriate B63 side impact sensor. It may take up to 2 minutes for all vehicle systems to power down.
2. Test for less than 10 Ω between the low reference circuit terminal 2 and ground.

   If 10 Ω or greater

   2.1. Disconnect the X2 harness connector at the K36 SDM.

   2.2. Test for less than 2 Ω in the low reference circuit end to end.

   If 2 Ω or greater, repair the open/high resistance in the circuit.

   If less than 2 Ω, replace the K36 SDM.

   If less than 10 Ω
3. Disconnect the X2 harness connector at the K36 SDM.
4. Test for less than 2 Ω between the signal circuit terminal 1 at the B63 side impact sensor and the K36 SDM terminal listed below:
   - Left front signal terminal 19 X2
   - Right rear signal terminal 30 X2

   If 2 Ω or greater

   Repair the open/high resistance in the circuit.

   If less than 2 Ω
5. Verify that the K36 SDM calibrations match the VIN data, software part number, and calibration part number.

   If the K36 SDM calibrations do not match the VIN data

   Program the K36 SDM, refer to Inflatable Restraint Sensing and Diagnostic Module Programming and Setup .

   If the K36 SDM calibrations match the VIN data
6. Replace the B63 side impact sensor.
7. Verify the DTC does not set.

   If the DTC sets

   Replace the K36 SDM.

   If the DTC does not set
8. All OK

Both DTC B0085 and B0088 are set

1. Vehicle OFF. Disconnect the X2 harness connector at the K36 SDM. It may take up to 2 minutes for all vehicle systems to power down.
2. Test for less than 1 V between the signal circuit terminals listed below and ground:
   - Left front signal circuit - terminal 19 X2
   - Right rear signal circuit - terminal 30 X2

   If 1 V or greater

   2.1. Disconnect the harness connector at the B63 side impact sensor that failed the test.
   2.2. Test for less than 1 V between signal circuit and ground.
   If 1 V or greater, repair the short to voltage in the circuit.
   If less than 1 V, replace the B63 side impact sensor.

   If less than 1 V
3. Test for greater than 50k Ω between each signal circuit listed below and ground:
   - Left front signal circuit - terminal 19 X2
   - Right rear signal circuit - terminal 30 X2

   If 50k Ω or less

   3.1. Disconnect the harness connector at the B63 side impact sensor that failed the test.
   3.2. Test for infinite resistance between the signal circuit and ground.
   If less than infinite resistance, repair the short to ground on the circuit.
   If infinite resistance, replace the B63 side impact sensor.

   If greater than 50k Ω
4. Verify that the K36 SDM calibrations match the VIN data, software part number, and calibration part number.
   If the K36 SDM calibrations do not match the VIN data
   Program the K36 SDM, refer to Inflatable Restraint Sensing and Diagnostic Module Programming and Setup .
   If the K36 SDM calibrations match the VIN data
5. Replace the K36 SDM.

Repair Instructions

Perform the Diagnostic Repair Verification after completing the repair.

- Inflatable Restraint Side Impact Sensor Replacement
- Control Module References for SDM replacement, programming and setup

&#169© Copyright Chevrolet. All rights reserved

DTC B0086 or B0087

Diagnostic Instructions

- Perform the Diagnostic System Check - Vehicle prior to using this diagnostic procedure.
- Review Strategy Based Diagnosis for an overview of the diagnostic approach.
- Diagnostic Procedure Instructions provides an overview of each diagnostic category.

DTC Descriptors

DTC B0086 02: Right Front Side Impact Sensor Short to Ground

DTC B0086 05: Right Front Side Impact Sensor High Voltage/Open

DTC B0086 39: Right Front Side Impact Sensor Internal Malfunction

DTC B0086 3A: Right Front Side Impact Sensor Incorrect Component Installed

DTC B0086 71: Right Front Side Impact Sensor Invalid Data

DTC B0087 02: Left Rear Side Impact Sensor Short to Ground

DTC B0087 05: Left Rear Side Impact Sensor High Voltage/Open

DTC B0087 39: Left Rear Side Impact Sensor Internal Malfunction

DTC B0087 3A: Left Rear Side Impact Sensor Incorrect Component Installed

DTC B0087 71: Left Rear Side Impact Sensor Invalid Data

Diagnostic Fault Information

Circuit	Short to Ground	Open/High Resistance	Short to Voltage	Signal Performance

Right Front Side Impact Sensor High Signal	B0086 02, B0087 02	B0086 05	B0086 05, B0087 05	B0086 39
Right Front Side Impact Sensor Low Reference	B0086 02, B0087 02	B0086 05	B0086 05, B0087 05	B0086 39
Left Rear Side Impact Sensor High Signal	B0086 02, B0087 02	B0087 05	B0086 05, B0087 05	B0087 39
Left Rear Side Impact Sensor Low Reference	B0086 02, B0087 02	B0087 05	B0086 05, B0087 05	B0087 39

Circuit/System Description

The impact sensors are equipped on vehicles to supplement the supplemental inflatable restraint (SIR) system performance. The impact sensors are electronic and are not part of the deployment loops, but instead provide inputs to the sensing and diagnostic module (SDM). The impact sensors can assist in determining the severity of some frontal and side collisions. The SDM uses the input from the impact sensors to assist in determining the severity of a collision further supporting air bag deployment. If the SDM determines a deployment is warranted, the SDM will cause current to flow through the deployment loops deploying the air bags.

Conditions for Running the DTC

Ignition voltage is between 9-16 V.

Conditions for Setting the DTC

Any of the following conditions exist for 10 seconds:

B0086 02, B0087 02

- The sensor has been shorted to ground.
- The sensor current is greater than 23 mA for greater than 5 milliseconds.

B0086 05, B0087 05

- The sensor circuit is open.
- The SDM has not received a message from the sensor for greater than 375 milliseconds.

B0086 39, B0087 39

- The SDM has received a Not OK message from the sensor.
- The SDM has not received a message.

B0086 3A, B0087 3A

- The SDM has received identification message from the sensor, which does not match the identification stored in the SDM memory.

- The SDM has reset the impact sensor twice without detecting the correct identification message.

B0086 71, B0087 71

The SDM has received invalid serial data from the sensor.

Action Taken When the DTC Sets

The SDM requests the instrument panel cluster to illuminate the AIR BAG indicator.

Conditions for Clearing the DTC

- The condition for setting the DTC no longer exists.
- A history DTC will clear once 100 malfunction-free ignition cycles have occurred.
- An ignition cycle is required for the DTC to go from current to history.

Reference Information

Schematic Reference

SIR Schematics

Connector End View Reference

Component Connector End Views

Description and Operation

SIR System Description and Operation

Electrical Information Reference

- Circuit Testing
- Testing for Intermittent Conditions and Poor Connections
- Connector Repairs
- Wiring Repairs

Scan Tool Reference

Control Module References for scan tool information

Circuit/System Verification

Note: Refer to SIR Service Precautions .

Inspect all terminals for damage or corrosion when disconnecting connectors. Damage or corrosion in the following requires repair or replacement of the affected component/connector.

- Side impact sensor
- SDM
- Front impact sensor wiring harness connector
- Side impact sensor wiring harness connector
- SDM wiring harness connector

Note: The connector and connector position assurance (CPA) may seat independently of each other. Both the connector and CPA should seat with an audible and/or tactile click. The CPA isolates the shorting-bars within the connector allowing the deployment circuit to operate properly. Replace any CPA that is damaged or missing.

If the condition is intermittent or cannot be duplicated, disconnect the connectors and add Nyogel lubricant 760G. This procedure will correct the high resistance condition due to terminal fretting corrosion.

1. Verify that DTC B0086 or B0087 symptom byte 39 or 71 is not set as current.
   If DTC B0086 or B0087 symptom byte 39 or 71 is set as current
   Replace the sensor listed below:
   - B0086 - B63LF side impact sensor-right front
   - B0087 - B63RR side impact sensor-left rear

   If DTC B0086 or B0087 symptom byte 39 or 71 is not set as current
2. Verify that DTC B0086 or B0087 symptom byte 3A is not set as current.
   If DTC B0086 or B0087 symptom byte 3A is set as current
   Replace the incorrect B63 side impact sensor

   If DTC B0086 or B0087 symptom byte 3A is not set as current
3. Verify that DTC B0086 or B0087 symptom byte 02 or 05 is set as current.
   If only DTC B0086 symptom byte 02 or 05 is set as current
   Refer to Circuit/System Testing - Only DTC B0086 or B0087 is set.
   If only DTC B0087 symptom byte 02 or 05 is set as current
   Refer to Circuit/System Testing - Only DTC B0086 or B0087 is set.
   If both DTC B0086 or B0087 symptom byte 02 or 05 is set as current
   Refer to Circuit/System Testing - Both DTC B0086 and B0087 are set.

If DTC B0086 or B0087 symptom byte 02 or 05 is not set as current

4. All OK.

Circuit/System Testing

Note: The signal circuit is shared at the K36 SDM between the B63RF side impact sensor right front and the B63LR side impact sensor left rear (DTC B0086 and DTC B0087). Therefore a short to ground or short to voltage in either of these signal circuits can set a DTC for both circuits, and an open in either circuit should only set its corresponding DTC.

Only DTC B0086 or B0087 is set

1. Vehicle OFF, disconnect the harness connector at the appropriate B63 side impact sensor. It may take up to 2 minutes for all vehicle systems to power down.
2. Test for less than 10 Ω between the low reference circuit terminal 2 and ground.

   If 10 Ω or greater

   2.1. Disconnect the X2 harness connector at the K36 SDM.

   2.2. Test for less than 2 Ω in the low reference circuit end to end.

   If 2 Ω or greater, repair the open/high resistance in the circuit.

   If less than 2 Ω, replace the K36 SDM.

   If less than 10 Ω
3. Disconnect the X2 harness connector at the K36 SDM.
4. Test for less than 2 Ω between the signal circuit terminal 1 at the B63 side impact sensor and the K36 SDM terminal listed below:
   - Right front signal terminal 22 X2
   - Left rear signal terminal 27 X2

   If 2 Ω or greater

   Repair the open/high resistance in the circuit.

   If less than 2 Ω
5. Verify that the K36 SDM calibrations match the VIN data, software part number, and calibration part number.

   If the K36 SDM calibrations do not match the VIN data

   Program the K36 SDM, refer to Inflatable Restraint Sensing and Diagnostic Module Programming and Setup .

   If the K36 SDM calibrations match the VIN data
6. Replace the B63 side impact sensor.
7. Verify the DTC does not set.

   If the DTC sets

   Replace the K36 SDM.

   If the DTC does not set
8. All OK

Both DTC B0086 and B0087 are set

1. Vehicle OFF. Disconnect the X2 harness connector at the K36 SDM. It may take up to 2 minutes for all vehicle systems to power down.
2. Test for greater than 50k Ω between each signal circuit listed below and ground:
   - Right front signal circuit - terminal 22 X2
   - Left rear signal circuit - terminal 27 X2

   If 50k Ω or less

   2.1. Disconnect the harness connector at the B63 side impact sensor that failed the test.
   2.2. Test for infinite resistance between the signal circuit and ground.
   If less than infinite resistance, repair the short to ground on the circuit.
   If infinite resistance, replace the B63 side impact sensor.

   If greater than 50k Ω
3. Test for less than 1 V between the signal circuit terminals listed below and ground:
   - Right front signal circuit - terminal 22 X2
   - Left rear signal circuit - terminal 27 X2

   If 1 V or greater

   3.1. Disconnect the harness connector at the B63 side impact sensor that failed the test.
   3.2. Test for less than 1 V between signal circuit and ground.
   If 1 V or greater, repair the short to voltage in the circuit.
   If less than 1 V, replace the B63 side impact sensor.

   If less than 1 V
4. Verify that the K36 SDM calibrations match the VIN data, software part number, and calibration part number.

   If the K36 SDM calibrations do not match the VIN data

   Program the K36 SDM, refer to Inflatable Restraint Sensing and Diagnostic Module Programming and Setup .

   If the K36 SDM calibrations match the VIN data
5. Replace the K36 SDM.

Repair Instructions

Perform the Diagnostic Repair Verification after completing the repair.

- Inflatable Restraint Side Impact Sensor Replacement
- Control Module References for SDM replacement, programming and setup

&#169© Copyright Chevrolet. All rights reserved

DTC B0098

Diagnostic Instructions

- Perform the Diagnostic System Check - Vehicle prior to using this diagnostic procedure.
- Review Strategy Based Diagnosis for an overview of the diagnostic approach.
- Diagnostic Procedure Instructions provides an overview of each diagnostic category.

DTC Descriptors

DTC B0098 02: Passenger Air Bag Disable Switch Circuit Short Circuit to Ground

DTC B0098 05: Passenger Air Bag Disable Switch Circuit High Voltage/Open

Diagnostic Fault Information

Circuit	Short to Ground	Open/High Resistance	Short to Voltage	Signal Performance
Passenger Air Bag Disable Switch Signal	B0098 02	B0098 05	B0098 05	-
Passenger Air Bag Disable Switch Ground	-	B0098 05	B0098 05	--

Circuit/System Description

When the ignition switch is turned to ON, the sensing and diagnostic module (SDM) will perform turn-on test to diagnose critical malfunctions within SDM itself. The SDM continuously checks the disable switch position switch and circuit defect by letting the regular voltage flow through the disable switch circuit and verifying the current.

Conditions for Running the DTC

Ignition voltage is between 9-16 V.

Conditions for Setting the DTC

B0098 02

The SDM detects a short to ground in the passenger air bag disable switch signal circuit.

B0098 05

The SDM detects a short to voltage or an open/high resistance in the passenger air bag disable switch signal circuit or the passenger air bag disable switch ground circuit.

Action Taken When the DTC Sets

The SDM will ignore the signal from the passenger air bag disable switch and will continuously enable the passenger air bag.

Conditions for Clearing the DTC

- The DTC will be current for as long as the fault is present.
- When the fault is no longer present, the DTC will be a history DTC.
- A history DTC will clear after 50 ignition cycles.

Reference Information

Schematic Reference

SIR Schematics

Connector End View Reference

Component Connector End Views

Description and Operation

SIR System Description and Operation

Electrical Information Reference

- Circuit Testing
- Testing for Intermittent Conditions and Poor Connections
- Wiring Repairs
- Connector Repairs

Scan Tool Reference

Control Module References for scan tool information

Circuit/System Verification

Observe the scan tool Passenger Air Bag Disabled Switch parameter while commanding the passenger air bag ON and OFF by using the S40 passenger air bag disable switch. The value should change between On and Off

Circuit/System Testing

1. Vehicle OFF.
2. Disconnect the harness connector at the S40 passenger air bag disable switch.
3. Test for less than 30 Ω between the low reference circuit terminal 3 and ground.
   If 30 Ω or greater
   3.1. Ignition OFF, disconnect the X1 harness connector at the K36 SDM.
   3.2. Test for less than 2 Ω in the S40 passenger air bag disable switch ground circuit end to end.
   If 2 Ω or greater, replace the coil or repair the open/high resistance in the circuit.
   If less than 2 Ω, replace the K36 SDM.
   If less than 30 Ω
4. Vehicle in Service Mode, test for 4.75-5.25 V between the signal circuit terminal 1 and ground.
   If less than 4.75 V
   4.1. Disconnect the X1 harness connector at the K36 SDM.
   4.2. Test for infinite resistance between the signal circuit and ground.
   If less than infinite resistance, repair the short to ground on the circuit.
   4.3. Test for less than 2 Ω in the signal circuit end to end.
   If 2 Ω or greater, repair the open/high resistance in the circuit.
   If less than 2 Ω, replace the K36 SDM.
   If greater than 5.25 V
   4.1. Vehicle OFF.
   4.2. Disconnect the X1 harness connector at the K36 SDM.
   4.3. Ignition ON.
   4.4. Test for less than 1 V between the signal circuit and ground.
   If 1 V or greater, repair the short to voltage on the circuit.
   If less than 1 V, replace the K36 SDM.
   If between 4.75-5.25 V
5. Replace the S40 passenger air bag disable switch.

Component Testing

1. Disconnect the harness connector at the S40 passenger air bag disable switch.
2. With the switch open, test for 380-420 Ω between the signal terminal 1 and the ground terminal 3.
   If not between 380-420 Ω
   Replace the S40 passenger air bag disable switch.
   If between 380-420 Ω
3. With the switch closed, test for 95-105 Ω, between the signal terminal 1 and the ground terminal 3.
   If not between 95-105 Ω
   Replace the S40 passenger air bag disable switch.
   If between 95-105 Ω
4. All OK.

Repair Instructions

Perform the Diagnostic Repair Verification after completing the diagnostic procedure.

Control Module References for SDM control module replacement, programming and setup

&#169© Copyright Chevrolet. All rights reserved

DTC B067F or B0680

Diagnostic Instructions

- Perform the Diagnostic System Check - Vehicle prior to using this diagnostic procedure.
- Review Strategy Based Diagnosis for an overview of the diagnostic approach.
- Diagnostic Procedure Instructions provides an overview of each diagnostic category.

DTC Descriptors

DTC B067F 01: Passenger Air Bag On Indicator Circuit Short to Battery

DTC B067F 02: Passenger Air Bag On Indicator Circuit Short to Ground

DTC B067F 04: Passenger Air Bag On Indicator Circuit Open

DTC B0680 01: Passenger Air Bag Off Indicator Circuit Short to Battery

DTC B0680 02: Passenger Air Bag Off Indicator Circuit Short to Ground

DTC B0680 04: Passenger Air Bag Off Indicator Circuit Open

Diagnostic Fault Information

Circuit	Short to Ground	Open/High Resistance	Short to Voltage	Signal Performance
Passenger Air Bag OFF Indicator Control	B0680 02	B0680 04	B0680 01	-
Passenger Air Bag ON Indicator Control	B067F 02	B067F 04	B067F 01	-
Passenger Air Bag Disable Indicator Ground	-	B067F 04, B0680 04	1	--

Circuit/System Description

The passenger air bag ON/OFF indicators are used to notify the driver when the passenger presence system has enabled or disabled the passenger instrument panel air bag.

When the ignition is turned ON, the ignition voltage is supplied to the passenger presence module. When the inflatable restraint sensing and diagnostic module (SDM) receives the appropriate serial data message from the passenger presence module the SDM will then provide voltage to the appropriate indicator.

Conditions for Running the DTC

- The Vehicle is in Service mode
- Ignition Voltage is between 9-16 V

Conditions for Setting the DTC

The SDM detects improper voltage on the control circuit of the passenger air bag ON or OFF indicator

Actions Taken When the DTC Sets

Passenger air bag ON and OFF indicators are disabled.

Conditions for Clearing the DTC

The condition for setting the DTC no longer exists.

Reference Information

Schematic Reference

SIR Schematics

Connector End View Reference

Component Connector End Views

Description and Operation

SIR System Description and Operation

Electrical Information Reference

- Circuit Testing
- Connector Repairs
- Testing for Intermittent Conditions and Poor Connections

- Wiring Repairs

Scan Tool Reference

Control Module References for scan tool information

Circuit/System Verification

Note: The passenger air bag ON and OFF indicators may not operate as expected if there are supplemental inflatable restraint (SIR) DTCs. Repair all SIR DTCs before proceeding with this diagnostic.

1. Vehicle in Service Mode.
2. With a scan tool command the passenger air bag ON indicator and passenger air bag OFF indicator ON and OFF. The respective indicators should turn ON and OFF as commanded.

Circuit/System Testing

Note: When removing connectors inspect for damage or corrosion. Damage or corrosion in the following requires repair or replacement of the affected.
- Passenger air bag disable on/off indicator.
- Passenger air bag disable on/off indicator wiring harness.

1. Vehicle OFF, disconnect the harness connector at the P14 passenger air bag disable indicator. Test for less than 10 Ω between the ground circuit terminal 2 and ground.
   If 10 Ω or greater
   Repair the open/high resistance in the circuit.
   If less than 10 Ω
2. Vehicle in Service Mode, with a scan tool, command the passenger air bag OFF indicator OFF. Test for less than 11 V between the control circuit terminal 3 and ground.
   If 11 V or greater
   2.1. Vehicle OFF.
   2.2. Disconnect the X1 harness connector at the K36 SDM.
   2.3. Vehicle in Service Mode.
   2.4. Test for less than 1 V between the control circuit and ground.
   If 1 V or greater, repair the short to voltage on the circuit.
   If less than 1 V, replace the K36 SDM.
   If less than 11 V
3. With a scan tool, command the passenger air bag OFF indicator ON. Test for greater than 4 V between the control circuit terminal 3 and ground.
   If 4 V or less
   3.1. Disconnect the X1 harness connector at the K36 SDM. Test for infinite resistance between the control circuit and ground.
   If less than infinite resistance, repair the short to ground on the circuit.

3.2. Test for less than 2 Ω in each control circuit end to end.
If 2 Ω or greater, repair the open/high resistance in the circuit.
If less than 2 Ω, replace the K36 SDM.

If greater than 4 V

4. With a scan tool, command the passenger air bag ON indicator OFF. Test for less than 11 V between the control circuit terminal 1 and ground.

If 11 V or greater

4.1. Vehicle OFF.
4.2. Disconnect the X1 harness connector at the K36 SDM.
4.3. Vehicle in Service Mode.
4.4. Test for less than 1 V between the control circuit and ground.
If 1 V or greater, repair the short to voltage on the circuit.
If less than 1 V, replace the K36 SDM.

If less than 11 V

5. With a scan tool, command the passenger air bag ON indicator ON. Test for greater than 4 V between the control circuit terminal 1 and ground.

If 4 V or less

5.1. Disconnect the X1 harness connector at the K36 SDM.
5.2. Test for infinite resistance between the control circuit and ground.
If less than infinite resistance, repair the short to ground on the circuit.
5.3. Test for less than 2 Ω in each control circuit end to end.
If 2 Ω or greater, repair the open/high resistance in the circuit.
If less than 2 Ω, replace the K36 SDM.

If greater than 4 V

6. Replace the P14 passenger air bag disable indicator.

Repair Instructions

Perform the Diagnostic Repair Verification after completing the diagnostic procedure.

- Inflatable Restraint Instrument Panel Module Indicator Replacement
- Control Module References for K36 SDM replacement, programming and setup

&#169© Copyright Chevrolet. All rights reserved

DTC B1001

Diagnostic Instructions

- Perform the Diagnostic System Check - Vehicle prior to using this diagnostic procedure.
- Review Strategy Based Diagnosis for an overview of the diagnostic approach.
- Diagnostic Procedure Instructions provides an overview of each diagnostic category

DTC Descriptor

DTC B1001 00: Option Configuration

Circuit/System Description

The inflatable restraint sensing and diagnostic module (SDM) stores a primary data key, which is a 4-digit number. When the ignition is turned ON, the SDM compares this information to the information stored in the body control module (BCM) via the serial data. If there is a mismatch between the information stored in the SDM and BCM, DTC B1001 will set.

Conditions for Running the DTC

System voltage is between 9-16 V.

Conditions for Setting the DTC

The 4-digit Primary Data Key stored in the SDM does not match the 4 digits stored in the BCM.

Action Taken When the DTC Sets

- The SDM requests the instrument cluster to illuminate the AIR BAG indicator.
- The SDM disables all deployments.

Conditions for Clearing the DTC

The last 4-digit Primary Data Key in the SDM matches the last 4 digits stored in the BCM.

Diagnostic Aids

This DTC is an indication that an incorrect SDM is installed in the vehicle, or that the SDM and/or the BCM was replaced without reprogramming the BCM with the new information.

Reference Information

Schematic Reference

SIR Schematics

Connector End View Reference

Component Connector End Views

Description and Operation

SIR System Description and Operation

Electrical Information Reference

- Circuit Testing
- Testing for Intermittent Conditions and Poor Connections
- Wiring Repairs
- Connector Repairs

Scan Tool Reference

Control Module References for scan tool information

Circuit/System Verification

1. Verify the scan tool SDM Primary Key Status parameter is Valid.
   If the SDM Primary Key Status parameter is Invalid
   Perform the SDM setup. Refer to Inflatable Restraint Sensing and Diagnostic Module Programming and Setup .
   If the SDM Primary Key Status parameter is Valid

2. All OK.

Repair Instructions

Perform the Diagnostic Repair Verification after completing the repair.

- SIR/SRS Wiring Repairs
- Control Module References for SDM replacement, programming and setup

&#169© Copyright Chevrolet. All rights reserved

DTC B1019

Diagnostic Instructions

- Perform the Diagnostic System Check - Vehicle prior to using this diagnostic procedure.
- Review Strategy Based Diagnosis for an overview of the diagnostic approach.
- Diagnostic Procedure Instructions provides an overview of each diagnostic category.

DTC Descriptor

DTC B1019 00: System Configuration Error

Circuit/System Description

The inflatable restraint sensing and diagnostic module (SDM) monitors the number of safety components installed on the vehicle. When the ignition is turned ON, the SDM evaluates the number of safety components installed and compares it to the number of components the SDM expects to see on the vehicle with its current calibration. If there is a mismatch between detected components and the components programmed with the SDM calibration, DTC B1019 will set. The components (if equipped) that the SDM will detect include inflatable restraint deployment loops, impact sensors, passenger presence system components, seat position sensors, disable switches, and seat belt switches.

Conditions for Running the DTC

Ignition voltage is between 9-16 V.

Conditions for Setting the DTC

The setup for the SDM has not been completed and the SDM does not detect the correct number of sensors or deployment loops than is expected with this calibration.

Action Taken When the DTC Sets

- The SDM requests the instrument cluster to illuminate the AIR BAG warning indicator.
- The DTC must be cleared before running the setup SDM.

- Air bag indicator will continue to flash until SDM setup procedure is complete.

Conditions for Clearing the DTC

- The condition for setting the DTC is no longer present.
- A history DTC will clear once 100 malfunction-free ignition cycles have occurred.

Diagnostic Aids

The SDM scan tool deployment loop and impact sensor data will match what the SDM has been programmed to expect to see on the vehicle. B1019 DTC will set if a deployment loop or impact sensor is added or removed from the system.

DTC B1019 will set when an open/high resistance DTC sets for a deployment loop or impact sensor. This causes mismatch between the learned and actual components connected to the SDM.

DTC B1019 can set with no other DTCs if an unused deployment loop or impact sensor circuit is shorted to ground. This causes a mismatch between the learned and actual components connected to the SDM.

Reference Information

Schematic Reference

- Seat Belt Schematics
- SIR Schematics

Connector End View Reference

Component Connector End Views

Description and Operation

- Seat Belt System Description and Operation
- SIR System Description and Operation

Electrical Information Reference

- Circuit Testing
- Testing for Intermittent Conditions and Poor Connections
- Connector Repairs

- Wiring Repairs

Scan Tool Reference

Control Module References for scan tool information

Circuit/System Verification

Note: DTC B1019 can set after SDM has been replaced and/or reprogrammed before the setup procedure is completed. The setup procedure cannot be completed if DTC B1019 is set as current or history. If a short or open is detected in a deployment circuit prior to the setup procedure being performed the SDM will set DTC B1019.

1. Vehicle in Service Mode.
2. Verify no other SDM DTCs are set.
   If other SDM DTCs are set
   Diagnose those DTCs first. Refer to Diagnostic Trouble Code (DTC) List - Vehicle
   If no other SDM DTCs are set
3. Observe the SDM impact sensor configuration scan tool data list using the scan tool. Verify that the impact sensors called out in the scan tool data list match the number of actual impact sensors the vehicle is built with.
   If the number of impact sensors do not match
   Verify the correct SDM calibration file is loaded in the SDM.
   If the SDM calibration file is correct, the vehicle contains less/more sensors than it is supposed to. Modify the vehicle to match the SDM impact sensor calibration scan tool data list.
   If the number of impact sensors match
4. Observe the SDM enabled deployment loop configuration scan tool data list using the scan tool. Verify that the enabled deployment loops called out in the scan tool data list match the deployment loops the vehicle is built with.
   If the number of enabled deployment loops do not match
   Verify the correct SDM calibration file is loaded in the SDM.
   If the SDM calibration file is correct, modify the vehicle to match the SDM enabled deployment loop calibration scan tool data list.
   If the number of enabled deployment loops match
5. Replace the K36 SDM.

Repair Instructions

Perform the Diagnostic Repair Verification after completing the diagnostic procedure.

- SIR/SRS Wiring Repairs
- Control Module References for SDM replacement, programming and setup

&#169© Copyright Chevrolet. All rights reserved

Symptoms - SIR

Note: Complete the following steps before using the symptom tables:

1. Perform Diagnostic System Check - Vehicle before using the symptom tables in order to verify that all of the following are true:
   - There are no DTCs set.
   - The inflatable restraint sensing and diagnostic module (SDM) can communicate via the serial data link.
2. Review the SIR system description and operation in order to familiarise yourself with the system functions. Refer to SIR System Description and Operation .

Visual/Physical Inspection

- Inspect for aftermarket devices which could affect the operation of the SIR system. Refer to Checking Aftermarket Accessories .
- Inspect the easily accessible or visible system components for obvious damage or conditions which could cause the symptom.

Intermittent

Faulty electrical connections or wiring may be the cause of intermittent conditions. Refer to Testing for Intermittent Conditions and Poor Connections .

Symptom List

Refer to Air Bag Indicator Circuit Malfunction : Driver → Passenger in order to diagnose the symptom.

&#169© Copyright Chevrolet. All rights reserved

Air Bag Indicator Circuit Malfunction - Passenger

Diagnostic Instructions

- Perform the Diagnostic System Check - Vehicle prior to using this diagnostic procedure.
- Review Strategy Based Diagnosis for an overview of the diagnostic approach.
- Diagnostic Procedure Instructions provides an overview of each diagnostic category.

Diagnostic Fault Information

Circuit	Short to Ground	Open/High Resistance	Short to Voltage	Signal Performance
Passenger Air Bag OFF Indicator Control	2	2*	4	-
Passenger Air Bag ON Indicator Control	3	3*	5	-
Passenger Air Bag Disable Indicator Ground	--	1	1	--

1. Both indicators always OFF
2. The OFF indicator will not illuminate
3. The ON indicator will not illuminate
4. The OFF indicator always ON
5. The ON indicator always ON

* High resistance may cause the appropriate indicator to illuminate less bright than normal

Circuit/System Description

The passenger air bag ON/OFF indicators are used to notify the driver when the passenger presence system has enabled or disabled the passenger instrument panel air bag. When the ignition is turned ON, the ignition voltage is supplied to the passenger presence module. When the inflatable restraint sensing and diagnostic module (SDM) receives the appropriate serial data message from the passenger presence module the SDM will then provide voltage to the appropriate indicator.

Reference Information

Schematic Reference

SIR Schematics

Connector End View Reference

Component Connector End Views

Description and Operation

SIR System Description and Operation

Electrical Information Reference

- Circuit Testing
- Connector Repairs
- Testing for Intermittent Conditions and Poor Connections
- Wiring Repairs

Scan Tool Reference

Control Module References for scan tool information

Circuit/System Verification

Note: The passenger air bag ON and OFF indicators may not operate as expected if there are supplemental inflatable restraint (SIR) DTCs. Repair all SIR DTCs before proceeding with this diagnostic.

1. Vehicle in Service Mode.
2. With a scan tool command the passenger air bag ON indicator and passenger air bag OFF indicator ON and OFF. The respective indicators should turn ON and OFF as commanded.

Circuit/System Testing

Note: When removing connectors inspect for damage or corrosion. Damage or corrosion in the following requires repair or replacement of the affected.

- Passenger air bag disable on/off indicator.
- Passenger air bag disable on/off indicator wiring harness.

1. Vehicle OFF.

2. Disconnect the harness connector at the P14 passenger air bag disable indicator.
3. Test for less than 10 Ω between the ground circuit terminal 2 and ground.

If 10 Ω or greater

Repair the open/high resistance in the circuit.

If less than 10 Ω

4. Vehicle in Service Mode.
5. With a scan tool, command the passenger air bag OFF indictor OFF.
6. Test for less than 11 V between the control circuit terminal 3 and ground.

If 11 V or greater

6.1. Vehicle OFF.
6.2. Disconnect the X1 harness connector at the K36 SDM.
6.3. Vehicle in Service Mode.
6.4. Test for less than 1 V between the control circuit and ground.
If 1 V or greater, repair the short to voltage on the circuit.
If less than 1 V, replace the K36 SDM.

If less than 11 V

7. With a scan tool, command the passenger air bag OFF indicator ON.
8. Test for greater than 4 V between the control circuit terminal 3 and ground.

If 4 V or less

8.1. Disconnect the harness connector at the K36 SDM.
8.2. Test for infinite resistance between the control circuit and ground.
If less than infinite resistance, repair the short to ground on the circuit.
8.3. Test for less than 2 Ω in each control circuit end to end.
If 2 Ω or greater, repair the open/high resistance in the circuit.
If less than 2 Ω, replace the K36 SDM.

If greater than 4 V

9. With a scan tool, command the passenger air bag ON indicator OFF.
10. Test for less than 11 V between the control circuit terminal 1 and ground.

If 11 V or greater

10.1. Vehicle OFF.
10.2. Disconnect the X1 harness connector at the K36 SDM.
10.3. Vehicle in Service Mode.
10.4. Test for less than 1 V between the control circuit and ground.
If 1 V or greater, repair the short to voltage on the circuit.
If less than 1 V, replace the K36 SDM.

If less than 11 V

11. With a scan tool, command the passenger air bag ON indicator ON.

12. Test for greater than 4 V between the control circuit terminal 1 and ground.

If 4 V or less

12.1. Disconnect the harness connector at the K36 SDM.

12.2. Test for infinite resistance between the control circuit and ground.

If less than infinite resistance, repair the short to ground on the circuit.

12.3. Test for less than 2 Ω in each control circuit end to end.

If 2 Ω or greater, repair the open/high resistance in the circuit.

If less than 2 Ω, replace the K36 SDM.

If greater than 4 V

13. Replace the P14 passenger air bag disable indicator.

Repair Instructions

Perform the Diagnostic Repair Verification after completing the diagnostic procedure.

- Inflatable Restraint Instrument Panel Module Indicator Replacement
- Control Module References for K36 SDM replacement, programming and setup

© Copyright Chevrolet. All rights reserved

Air Bag Indicator Circuit Malfunction - Driver

Diagnostic Instructions

- Perform the Diagnostic System Check - Vehicle prior to using this diagnostic procedure.
- Review Strategy Based Diagnosis for an overview of the diagnostic approach.
- Diagnostic Procedure Instructions provides an overview of each diagnostic category.

Circuit/System Description

With the Vehicle in Service Mode, during the bulb check, the driver air bag indicator will flash, and then turn OFF after the bulb check. The inflatable restraint sensing and diagnostic module (SDM) performs diagnostic tests on the SIR system during the bulb check. If any malfunction exists the SDM will request the instrument cluster to illuminate the air bag indicator steady, via serial data. If a preexisting malfunction exists, the air bag indicator will illuminate steady immediately after the ignition is turned ON. If the ignition 1 voltage is outside of the normal operating voltage range of 9-16 V, the SDM will command the instrument cluster to illuminate the air bag indicator ON, even with no DTCs present, and then disable all deployment loops.

Diagnostic Aids

- A DTC B1370 may set if the ignition 1 circuit is outside the 9-16 V range.
- A flashing driver air bag indicator is displayed if the inflatable restraint sensing and diagnostic module was programmed but did not fully complete the programming. For a flashing driver airbag indicator, refer to Inflatable Restraint Sensing and Diagnostic Module Programming and Setup .

Reference Information

Schematic Reference

SIR Schematics

Connector End View Reference

Component Connector End Views

Description and Operation

SIR System Description and Operation

Electrical Information Reference

- Circuit Testing
- Testing for Intermittent Conditions and Poor Connections
- Connector Repairs
- Wiring Repairs

Scan Tool Reference

Control Module References for scan tool information

Circuit/System Verification

If the driver air bag indicator is flashing, refer to Inflatable Restraint Sensing and Diagnostic Module Programming and Setup .

Circuit/System Testing

1. Vehicle in Service Mode. With a scan tool, verify SDM DTCs are not set.
   If SDM DTCs are set
   Refer to Diagnostic Trouble Code (DTC) List - Vehicle .
   If SDM DTCs are not set
2. With a scan tool command the Instrument Cluster to turn all instrument cluster indicators ON and OFF. The air bag indicator should turn ON and OFF as commanded.
   If air bag indicator does not turn on or off
   If the air bag indicator does not turn ON and OFF as expected, replace the P16 instrument cluster.
   If air bag indicator does turn on or off
3. Replace the K36 SDM.

Repair Instructions

Perform the Diagnostic Repair Verification after completing the diagnostic procedure.

- SIR/SRS Wiring Repairs
- Control Module References for instrument cluster or SDM replacement, programming and setup

© Copyright Chevrolet. All rights reserved

SIR Disabling and Enabling

SIR component location affects how a vehicle should be serviced. There are parts of the SIR system installed in various locations around a vehicle. To find the location of the SIR components refer to SIR Identification Views .

There are several reasons for disabling the SIR system, such as repairs to the SIR system or servicing a component near or attached to an SIR component. There are several ways to disable the SIR system depending on what type of service is being performed. The following information covers the proper procedures for disabling/enabling the SIR system.

Condition	Action
If the vehicle was involved in an accident with an air bag deployment.	Disconnect the negative battery cable(s)
When performing SIR diagnostics.	Follow the appropriate SIR service manual diagnostic procedure(s) *
When moving, removing or replacing an SIR component or a component attached to an SIR component. (Anytime you remove fasteners.)	Disconnect the negative battery cable(s) *
If the vehicle is suspected of having shorted electrical wires.	Disconnect the negative battery cable(s) *
When performing electrical diagnosis on components other than the SIR system.	Remove the SIR/Airbag fuse(s) when indicated by the diagnostic procedure to disable the SIR system
* DTCs will be lost when the negative battery cable is disconnected.	

SIR Service Precautions

Warning: When performing service on or near the SIR components or the SIR wiring, the SIR system must be disabled. Failure to observe the correct procedure could cause deployment of the SIR components. Serious injury can occur. Failure to observe the correct procedure could also result in unnecessary SIR system repairs.

The inflatable restraint sensing and diagnostic module (SDM) maintains a reserved energy supply. The reserved energy supply provides deployment power for the air bags if the SDM loses battery power during a collision. Deployment power is available for as much as 1 minute after disconnecting the vehicle power. Waiting 1 minute before working on the system after disabling the SIR system prevents deployment of the air bags from the reserved energy supply.

General Service Instructions

The following are general service instructions which must be followed in order to properly repair the vehicle and return it to its original integrity:

- Do not expose air bags to temperatures above 65°C (149°F).

- Verify the correct replacement part number. Do not substitute a component from a different vehicle.
- Use only original GM replacement parts available from your authorised GM dealer. Do not use salvaged parts for repairs to the SIR system.

Discard any of the following components if it has been dropped from a height of 92 cm (3 feet) or greater:

- Inflatable restraint sensing and diagnostic module (SDM)
- Any air bag
- Driver steering wheel air bag coil
- Any impact sensor
- Seat belt anchor and/or retractor pretensioners
- Passenger presence module and/or occupant sensor

Disabling Procedure - Air Bag Fuse

1. Turn the steering wheel so that the vehicles wheels are pointing straight ahead.
2. Vehicle OFF.

   Note: The SDM may have more than one fused power input. To ensure there is no unwanted SIR deployment, personal injury, or unnecessary SIR system repairs, remove all fuses supplying power to the SDM. With all SDM fuses removed and the ignition switch in the ON position, the AIR BAG warning indicator illuminates. This is normal operation, and does not indicate a SIR system malfunction.

3. Locate and remove the fuse(s) supplying power to the SDM. Refer to SIR Schematics or Electrical Centre Identification Views .
4. Wait 1 minute before working on the system.

Enabling Procedure - Air Bag Fuse

1. Vehicle OFF.
2. Install the fuse(s) supplying power to the SDM. Refer to SIR Schematics or Electrical Centre Identification Views .
3. Vehicle in Service Mode. The AIR BAG indicator will flash then turn OFF.
4. Perform the Diagnostic System Check - Vehicle if the AIR BAG warning indicator does not operate as described. Refer to Diagnostic System Check - Vehicle .

Disabling Procedure - Negative Battery Cable

1. Turn the steering wheel so that the vehicles wheels are pointing straight ahead.
2. Vehicle OFF.
3. Disconnect the negative battery cable from the battery. Refer to Battery Negative Cable Disconnection and Connection .
4. Wait 1 minute before working on system.

Enabling Procedure - Negative Battery Cable

1. Vehicle OFF.
2. Connect the negative battery cable to the battery. Refer to Battery Negative Cable Disconnection and Connection .
3. Vehicle in Service Mode. The AIR BAG indicator will flash then turn OFF.
4. Perform the Diagnostic System Check - Vehicle if the AIR BAG warning indicator does not operate as described. Refer to Diagnostic System Check - Vehicle .

&#169© Copyright Chevrolet. All rights reserved

SIR Service Precautions

General Service Instructions

Warning: When performing service on or near the SIR components or the SIR wiring, the SIR system must be disabled. Refer to SIR Disabling and Enabling. Failure to observe the correct procedure could cause deployment of the SIR components, personal injury, or unnecessary SIR system repairs.

Note: The inflatable restraint sensing and diagnostic module (SDM) maintains a reserved energy supply. The reserved energy supply provides deployment power for the SIR air bags. Deployment power may be available for up to 60 seconds after disconnecting the vehicle power. Disabling the SIR system prevents deployment of the SIR air bags from the reserved energy supply.

Note: The following are general service instructions which must be followed in order to properly repair the vehicle and return it to its original integrity:

- Do not expose air bags to temperatures above 65°C (149°F)
- Verify the correct replacement part number. Do not substitute a component from a different vehicle
- Use only original GM replacement parts available from your authorised GM dealer. Do not use salvaged parts for repairs to the SIR system

Note: Discard any of the following components if it has been dropped from a height of 92 cm (3 ft) or greater:

- SDM
- Passenger instrument panel air bag
- Driver steering wheel air bag
- Driver steering wheel air bag coil
- Roof rail air bags
- Front and /or side impact sensors
- Seat belt achor and/or retractor pretensioners
- Front seat side air bag

&#169© Copyright Chevrolet. All rights reserved

Front End Inflatable Restraint Discriminating Sensor Replacement

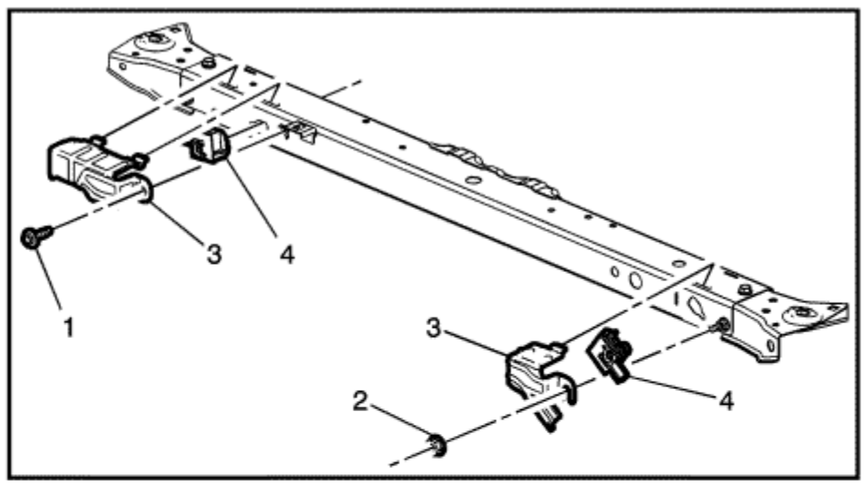

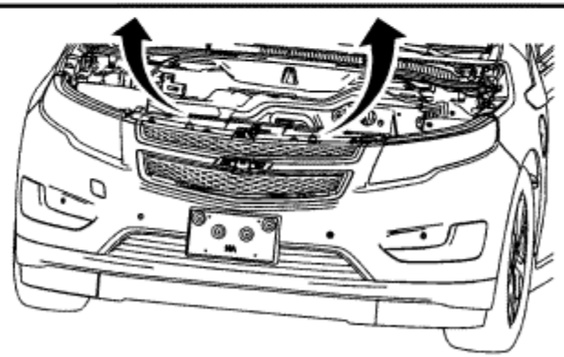

Callout	Component Name

Warning: Refer to SIR Warning in the Preface section.

Preliminary Procedures

1. Disable the supplemental inflatable restraint (SIR) system. Refer to SIR Disabling and Enabling .

2. Remove the front sight shield. Refer to Front Compartment Front Sight Shield Replacement : Volt → Ampera .

1	Inflatable Restraint Front End Sensor Adaptor Fastener **Caution:** Refer to Fastener Caution in the Preface section. **Tighten** 9 N·m (80 lb in)
2	Inflatable Restraint Front End Discriminating Sensor Nut **Tighten** 9 N·m (80 lb in)
3	Inflatable Restraint Front End Discriminating Sensor Bracket (Qty: 2)
4	Inflatable Restraint Front End Discriminating Sensor Assembly (Qty: 2) **Procedure** 1. Loosen the bolts and slide the sensor out of the keyhole slots. 2. The bolts are integral to the sensor assembly and DO NOT remove separately. **Tighten** 7.5 N·m (66 lb in)

© Copyright Chevrolet. All rights reserved

Inflatable Restraint Side Impact Sensor Replacement

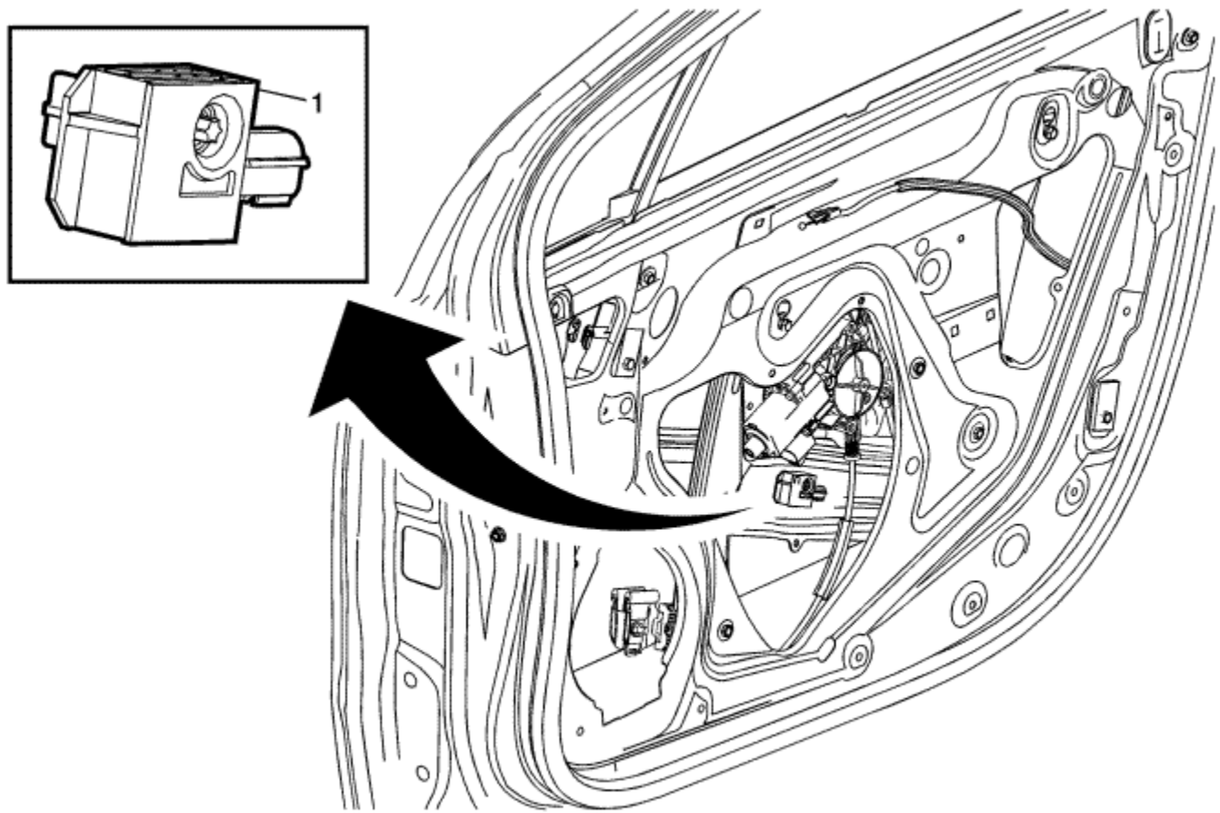

Callout	Component Name
Warning: When performing service on or near the SIR components or the SIR wiring, the SIR system must be disabled. Refer to SIR Disabling and Enabling. Failure to observe the correct procedure could cause deployment of the SIR components, personal injury, or unnecessary SIR system repairs. **Warning:** Do not strike or jolt the inflatable restraint side impact sensor (SIS). Before applying power to the SIS make sure that it is securely fastened. Failure to observe the correct installation procedures could cause SIR deployment, personal injury, or unnecessary SIR system repairs.	

Preliminary Procedures

1. Disable the supplemental inflatable restraint (SIR) system. Refer to SIR Disabling and Enabling .
2. Remove the front side door trim panel. Refer to Front Side Door Trim Replacement .

1	Inflatable Restraint Side Impact Sensor Assembly **Caution:** Refer to Fastener Caution in the Preface section. **Procedure** 1. Loosen the fasteners and slide the sensor out of the keyhole slots. 2. The bolts are integral to the sensor assembly, DO NOT remove separately. **Tip** The sensor is located on the inside of the front door inner panel. **Tighten** 7.5 N·m (66 lb in)

© Copyright Chevrolet. All rights reserved

Inflatable Restraint Sensing and Diagnostic Module Replacement

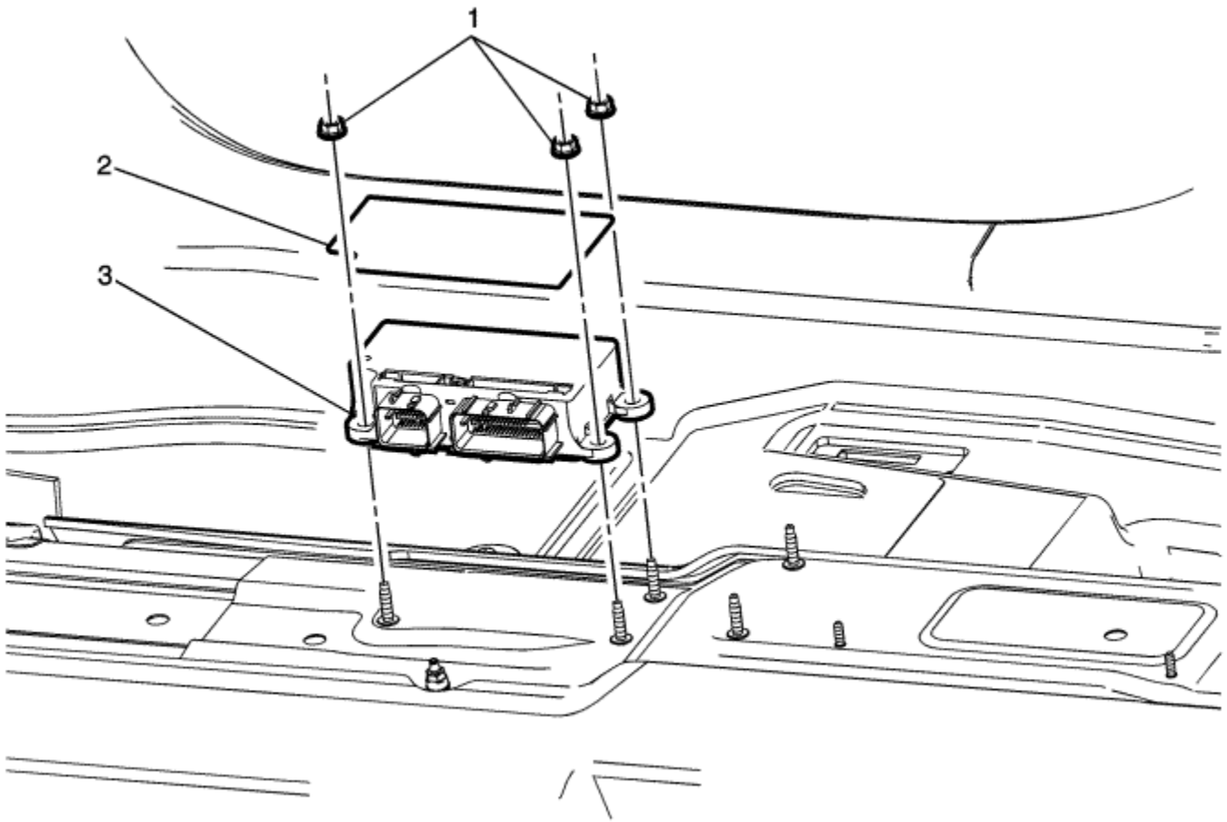

Callout	Component Name
Warning: Do not strike or jolt the inflatable restraint sensing and diagnostic module (SDM). Before applying power to the SDM, make sure that it is securely fastened with the arrow facing toward the front of the vehicle. Failure to observe the correct installation procedure could cause SIR deployment, personal injury, or unnecessary SIR system repairs. **Warning:** Refer to SIR Warning in the Preface section.	

Preliminary Procedures

1. Disable the supplemental inflatable restraint (SIR) system. Refer to SIR Disabling and Enabling .
2. Remove the console. Refer to Front Floor Console Replacement .
3. Disconnect the electrical connector.

1	Inflatable Restraint Sensing and Diagnostic Module Fastener (Qty: 3) **Caution:** Refer to Fastener Caution in the Preface section. **Tighten** 10 N·m (89 lb in)
2	Inflatable Restraint Diagnostic Energy Reserve Module Fastener Tape **Note:** This foil tape should be installed on the top of the SDM module whenever you are installing a replacement SDM module that was equipped with foil tape.
3	Inflatable Restraint Sensing and Diagnostic Module Assembly **Note:** • When installing, ensure the arrow on the module is pointed towards the front of the vehicle. • If installing a replacement module, program the module. Refer to Control Module References .

&#169© Copyright Chevrolet. All rights reserved

Steering Wheel Inflatable Restraint Module Replacement

Removal Procedure

Warning: Refer to SIR Inflator Module Handling and Storage Warning in the Preface section.

Warning: When carrying a live inflator module, make sure the bag opening is pointed away from you. This minimises the chance of injury in the case of an accidental deployment. Never carry the inflator module by the wires. Never carry the inflator module by the connector on the underside of the module.

Make sure that the bag and trim cover are facing up whenever you place a live inflator module on any surface. This is necessary to provide a free space for the bag to expand in the unlikely event of accidental deployment.

Never rest the steering column assembly on the steering wheel with the inflator module face down, and the column vertical. This may result in personal injury.

Warning: Refer to SIR Warning in the Preface section.

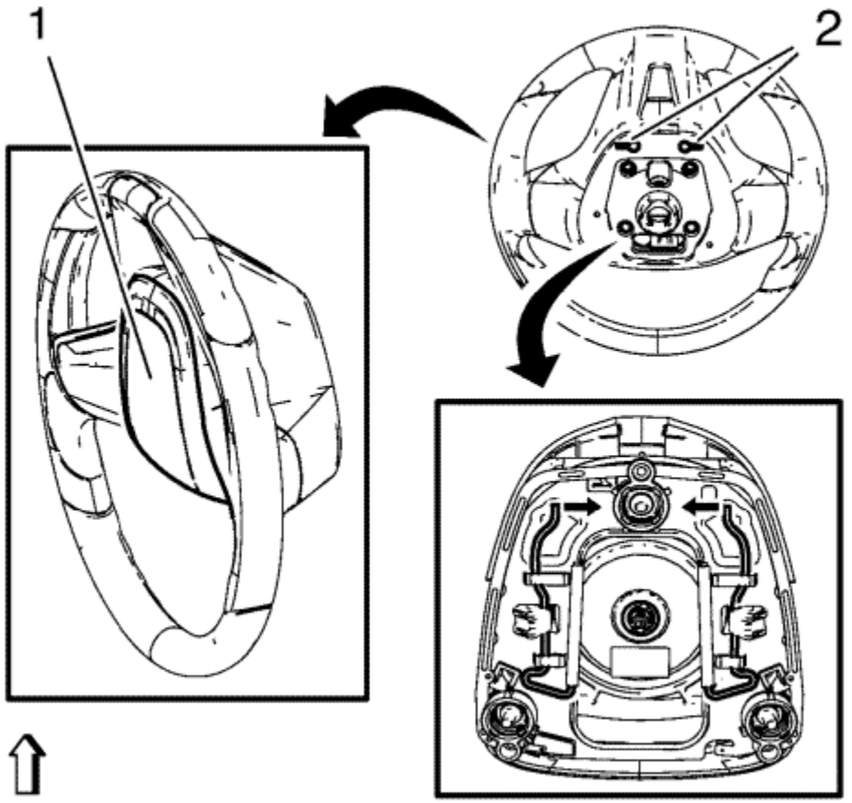

1. Disable the supplemental inflatable restraint (SIR) system. Refer to SIR Disabling and Enabling .
2. Turn steering wheel 180 degrees to access holes (2).
3. Insert suitable tools to the openings (2) on both sides of the steering wheel (1).
4. Release the springs in direction of the arrows.
5. Release the connector position assurance (CPA) retainer.
6. Disconnect the electrical connectors.

Installation Procedure

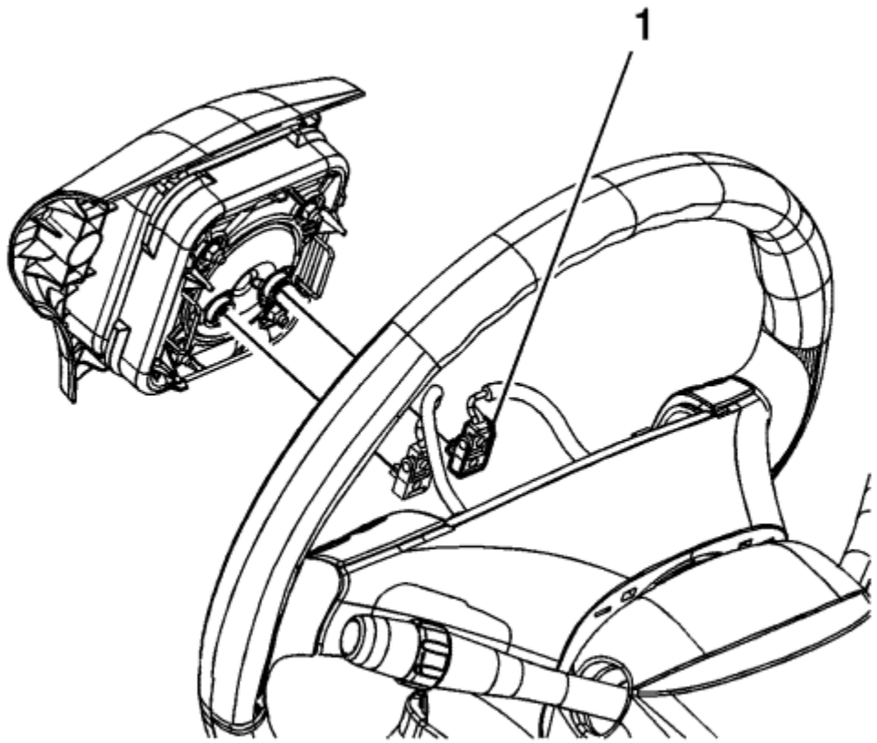

1. Connect the electrical connectors (1).

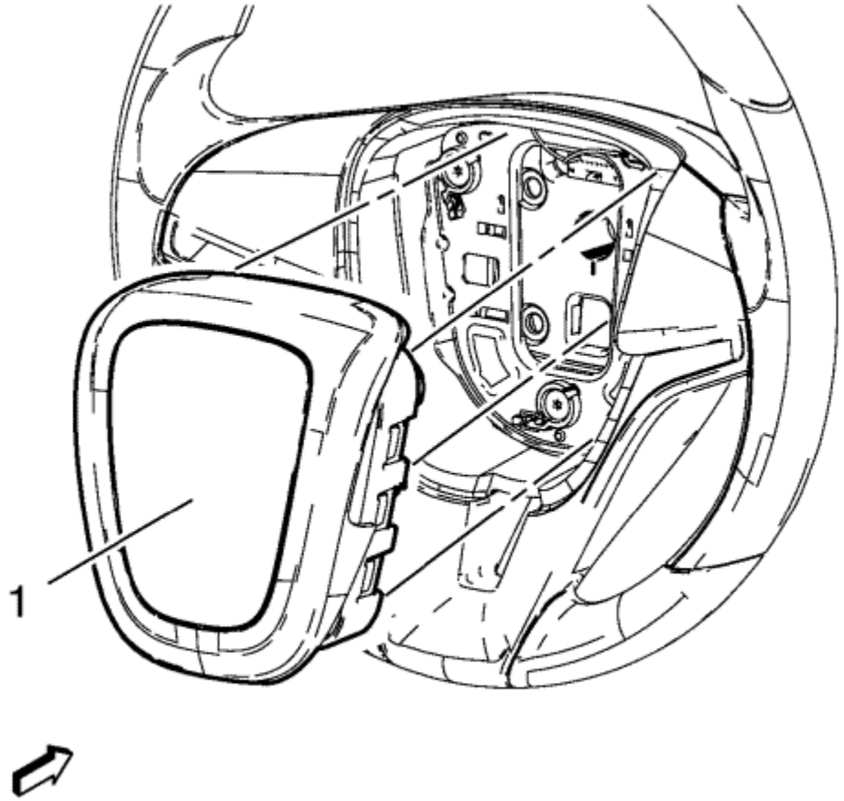

2. Align the steering wheel module fasteners to the steering column fastener holes.
3. Push the steering wheel module (1) firmly into the steering column in order the engage the fasteners.
4. Enable the SIR system. Refer to SIR Disabling and Enabling .
5. After replacing the module, fully deploy the old module before disposal. If the module was replaced under warranty, fully deploy and dispose of the module after the required retention period. Refer to Inflatable Restraint Module Handling and Scrapping .

© Copyright Chevrolet. All rights reserved

Steering Wheel Airbag Coil Replacement

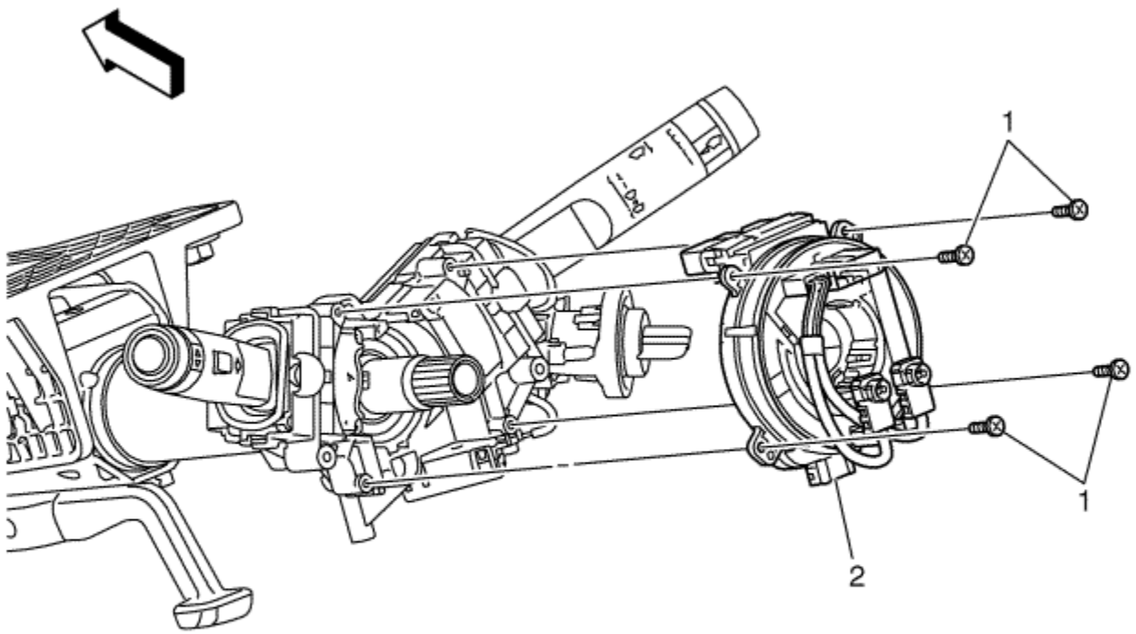

Callout	Component Name
Preliminary Procedures	

1. Remove the steering wheel. Refer to Steering Wheel Replacement .
2. Remove the steering column upper trim cover. Refer to Steering Column Upper Trim Cover Replacement .
3. Remove the steering column lower trim cover. Refer to Steering Column Lower Trim Cover Replacement .

1	Steering Wheel Inflatable Restraint Module Coil Bolt (Qty: 4) **Caution:** Refer to Fastener Caution in the Preface section. **Tighten** 1.5 N·m(13 lb in)
2	Steering Wheel Inflatable Restraint Module Coil **Procedure** 1. Disconnect any electrical connectors as necessary. 2. Use tape in order to secure the old coil in the centre position. 3. Remove the old coil from the steering column. 4. Transfer the steering angle sensor. Refer to Steering Angle Sensor Replacement . 5. Ensure the coil is centred during installation. If you are installing a NEW coil, ensure the centring tab is on the coil. If the coil is not centred, refer to Inflatable Restraint Steering Wheel Module Coil Centring .

© Copyright Chevrolet. All rights reserved

Inflatable Restraint Steering Wheel Module Coil Centring

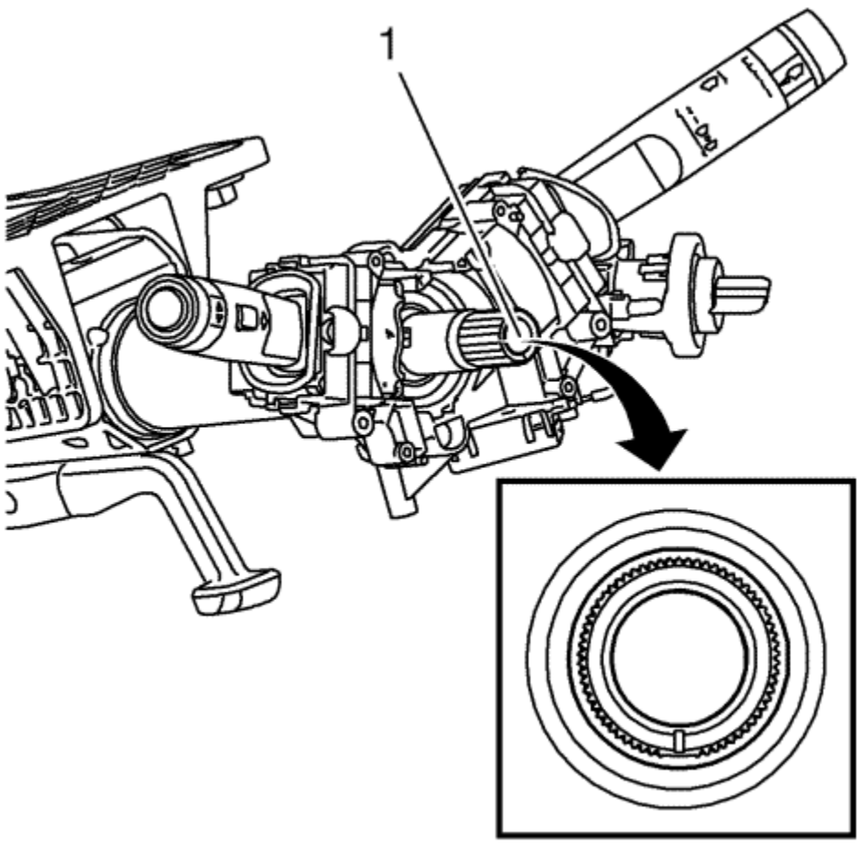

Caution: The new SIR coil assembly will be centered. Improper alignment of the SIR coil assembly may damage the unit, causing an inflatable restraint malfunction.

1. Verify the following conditions before centring the supplemental inflatable restraint (SIR) steering wheel module coil:
   - The wheels on the vehicle are straight ahead.
   - The centring mark (1) of the steering shaft is in the 6 o'clock position.

2. Turn the lobe of the clock spring clockwise until the coil ribbon stops. Do not force.
3. Turn the lobe of the clock spring counterclockwise approximately 3 turns to the Neutral position.

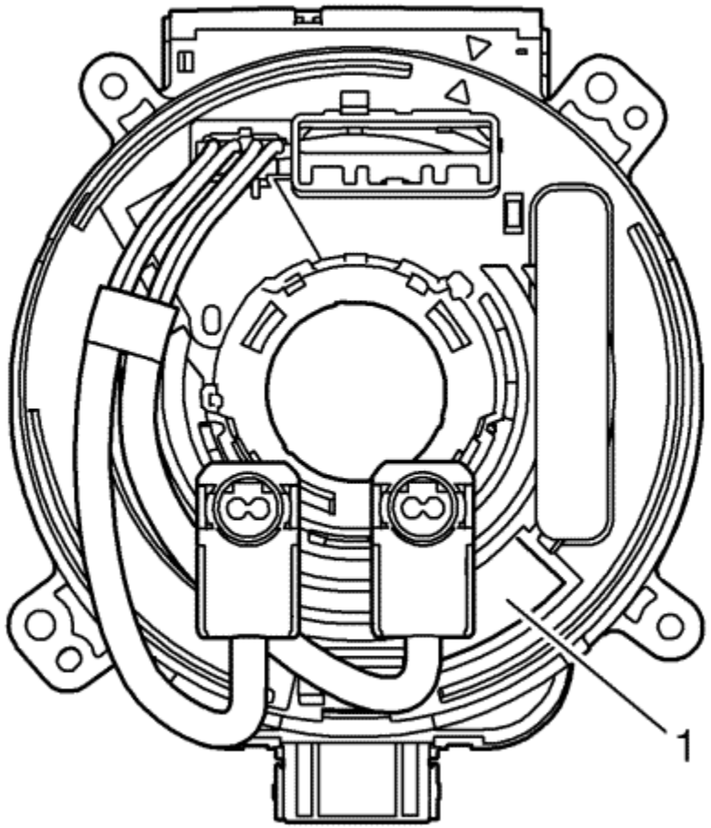

4. Properly align until the centring window turns yellow (1). This indicates the CENTER position.

&#169© Copyright Chevrolet. All rights reserved

Instrument Panel Inflatable Restraint Module Replacement

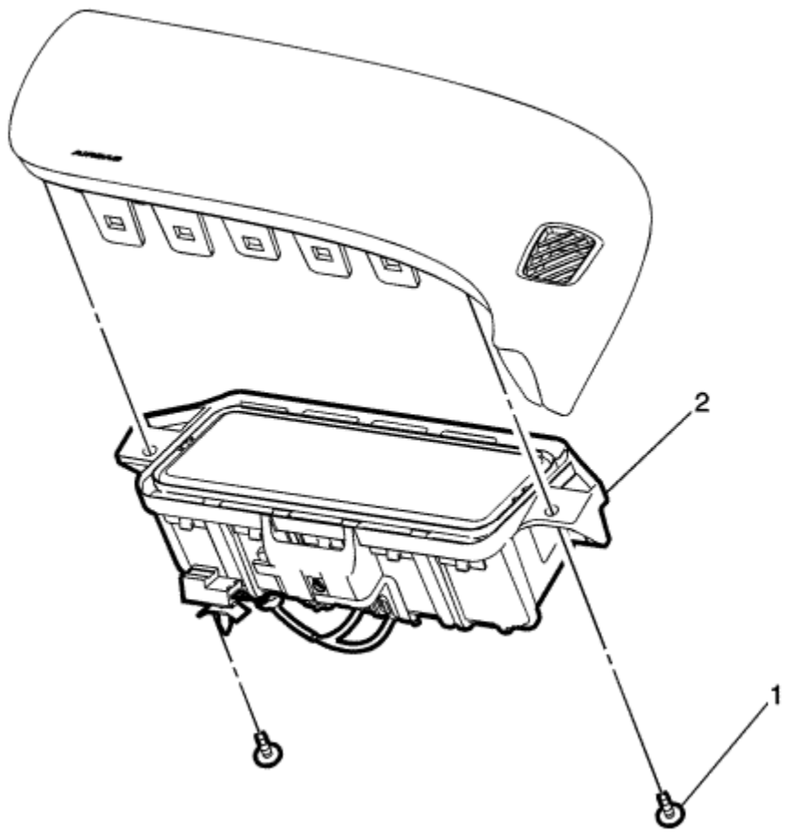

Callout	Component Name
Warning: Refer to SIR Inflator Module Handling and Storage Warning in the Preface section. **Warning:** Refer to SIR Warning in the Preface section. **Preliminary Procedure**	

1. Disable the SIR system. Refer to SIR Disabling and Enabling .
2. Remove the right side instrument panel upper outer trim panel. Refer to Instrument Panel Upper Outer Trim Panel Replacement - Right Side .

1	Instrument Panel Inflatable Restraint Module Fastener (Qty: 2) **Caution:** Refer to Fastener Caution in the Preface section.
2	Instrument Panel Inflatable Restraint Module Assembly **Procedure** 1. Ensure that the instrument panel inflatable restraint module is fully deployed before disposal. If the module was replaced under warranty, fully deploy and dispose of the module after the required retention period. Refer to Inflatable Restraint Module Handling and Scrapping . 2. Enable the SIR system. Refer to SIR Disabling and Enabling . **Note:** The instrument upper outer trim panel must be replaced if the passenger airbag is replaced.

© Copyright Chevrolet. All rights reserved

Inflatable Restraint Instrument Panel Lower Module Replacement - Driver Side

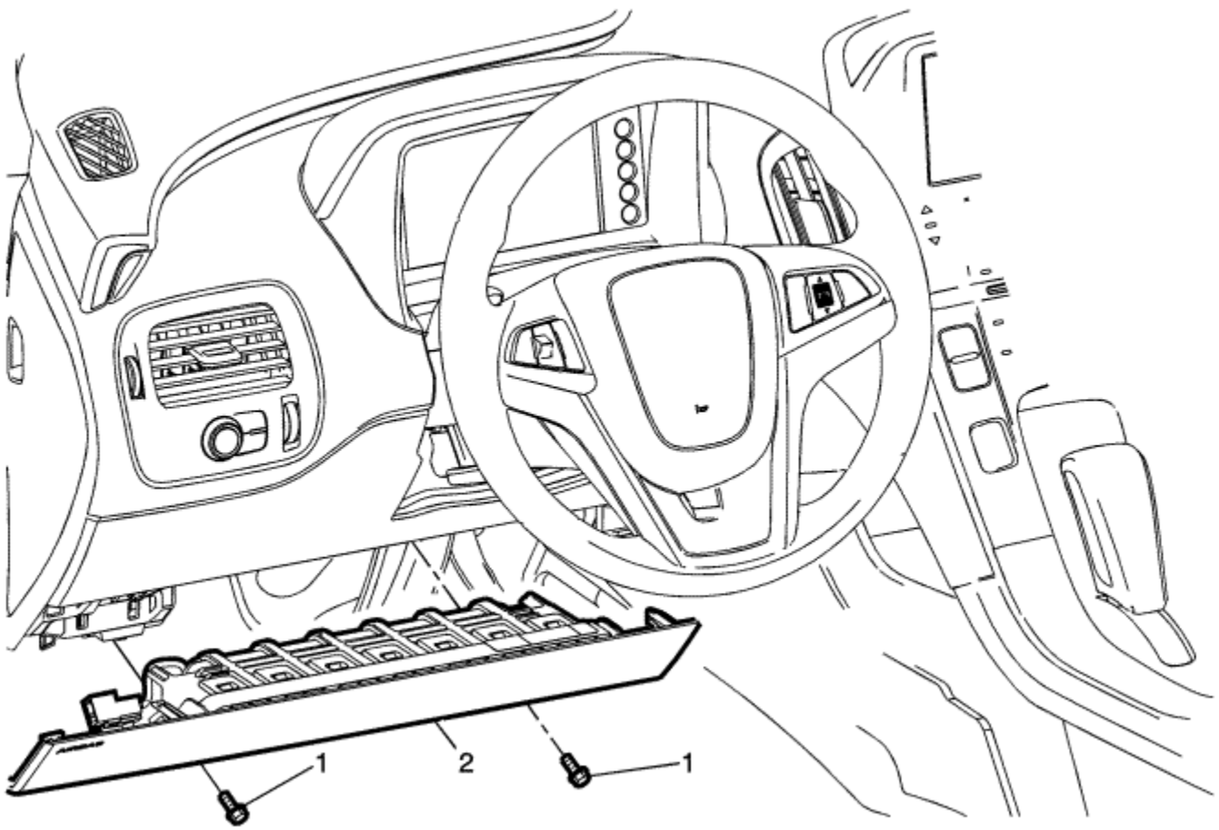

Callout	Component Name
Warning: Refer to SIR Warning in the Preface section. **Preliminary Procedure** Disable the SIR system. Refer to SIR Disabling and Enabling .	

1	Inflatable Restraint Instrument Panel Lower Module Fastener (Qty: 2) **Caution:** Refer to Fastener Caution in the Preface section. **Tighten:** 9 N·m (80 lb in)
2	Inflatable Restraint Instrument Panel Lower Driver Side Module Assembly **Procedure** Disconnect electrical connector.

© Copyright Chevrolet. All rights reserved

Inflatable Restraint Instrument Panel Lower Module Replacement - Passenger Side

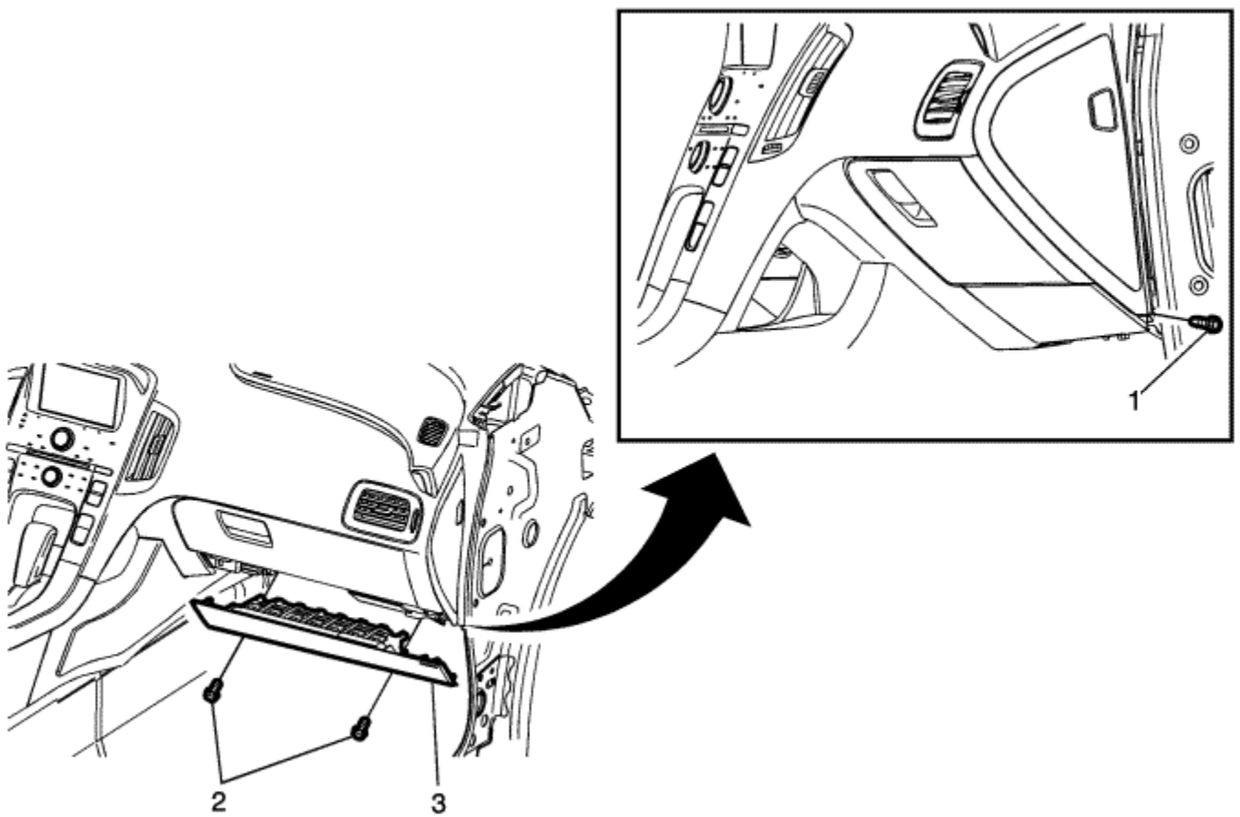

Callout	Component Name

Warning: Refer to SIR Warning in the Preface section.

Preliminary Procedures

1. Disable the SIR system. Refer to SIR Disabling and Enabling .

2. Remove the right side instrument panel side trim panel. Refer to Instrument Panel Side Trim Panel Replacement .
3. Remove the front side door opening floor carpet retainer. Refer to Front Side Door Opening Floor Carpet Retainer Replacement .

1	Instrument Panel Lower Airbag Fastener
2	Inflatable Restraint Instrument Panel Lower Module Fastener (Qty: 2) **Caution:** Refer to Fastener Caution in the Preface section. **Tighten** 9 N·m (80 lb in)
3	Inflatable Restraint Instrument Panel Lower Passenger Side Module Assembly **Procedure** Slide the connector from the data link connector bracket to disconnect the electrical connector.

© Copyright Chevrolet. All rights reserved

Driver or Passenger Seat Side Inflatable Restraint Module Replacement

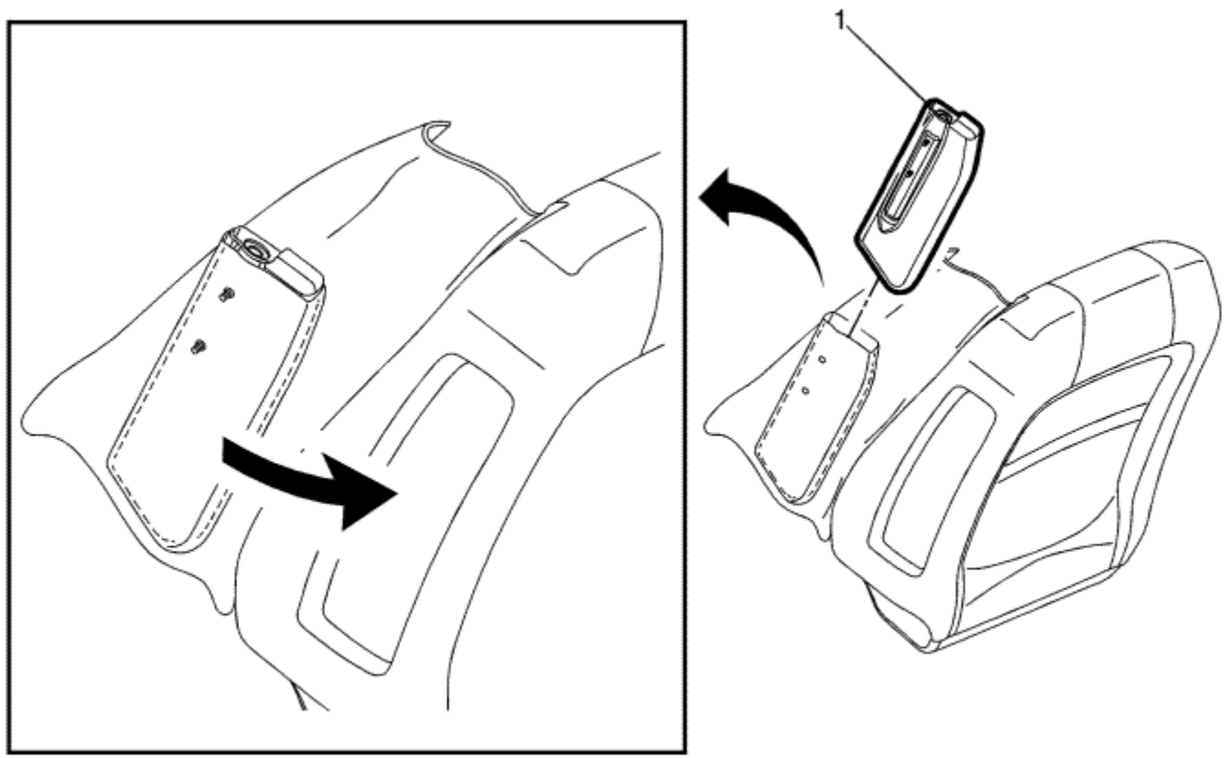

Callout	Component Name
Warning: Following the deployment of a side impact air bag, inspect the following parts for damage. Replace these parts if necessary: • The seat cushion frame • The seat recliner, if equipped • The seat adjuster	

- The seat back frame

Failure to do so may cause future personal injury.

Warning: Do not repair or replace the seat stitching or seams in the seat back trim cover with an internal mounted seat side airbag module. Replace the complete seat back trim cover from the OEM. Non-OEM seat stitching may cause improper airbag deployment which could result in personal injury.

Preliminary Procedure

1. Disable the SIR system. Refer to SIR Disabling and Enabling .
2. Remove the driver or passenger seat. Refer to Driver or Passenger Seat Replacement .
3. Remove the driver or passenger seat back cushion cover and pad. Refer to Driver or Passenger Seat Back Cushion Cover and Pad Replacement .

1	Driver or Passenger Seat Side Inflatable Restraint Module **Procedure** 1. Remove the module out of the chute by removing it through the top opening of the chute. 2. When installing the airbag module into the seat trim cover chute, ensure there is no twisting of the chute by fitting the module studs through the chute holes for proper alignment. The chute should then be folded into the pad opening and the airbag should be secured to the seat back frame.

&#169© Copyright Chevrolet. All rights reserved

Inflatable Restraint Rear Side Door Side Impact Sensor Replacement

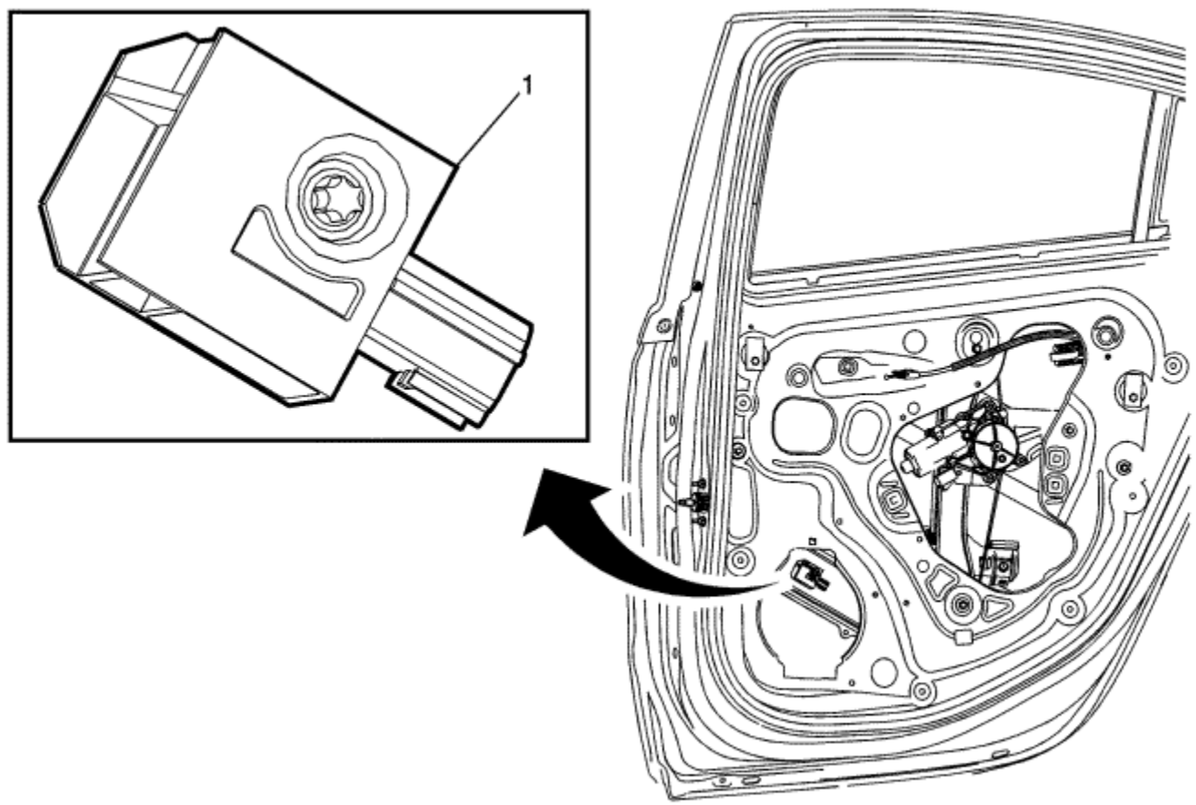

Callout	Component Name
Warning: When performing service on or near the SIR components or the SIR wiring, the SIR system must be disabled. Refer to SIR Disabling and Enabling. Failure to observe the correct procedure could cause deployment of the SIR components, personal injury, or unnecessary SIR system repairs. **Warning:** Do not strike or jolt the inflatable restraint side impact sensor (SIS). Before applying power to the SIS make sure that it is securely fastened. Failure to observe the correct installation procedures could cause SIR deployment, personal injury, or unnecessary SIR system repairs.	

Preliminary Procedures

1. Disable the supplemental inflatable restraint (SIR) system. Refer to SIR Disabling and Enabling .
2. Remove the rear side door trim panel. Refer to Rear Side Door Trim Replacement .

1	Inflatable Restraint Rear Side Door Impact Sensor Assembly **Caution:** Refer to Fastener Caution in the Preface section. **Procedure** 1. Loosen the fasteners and slide sensor out of key hole slots. 2. The bolts are integral to the sensor assembly, DO NOT remove separately. **Tip** The sensor is located on the inside of the rear door inner panel. **Tighten** 7.5 N·m (66 lb in)

© Copyright Chevrolet. All rights reserved

Inflatable Restraint Instrument Panel Module Indicator Replacement

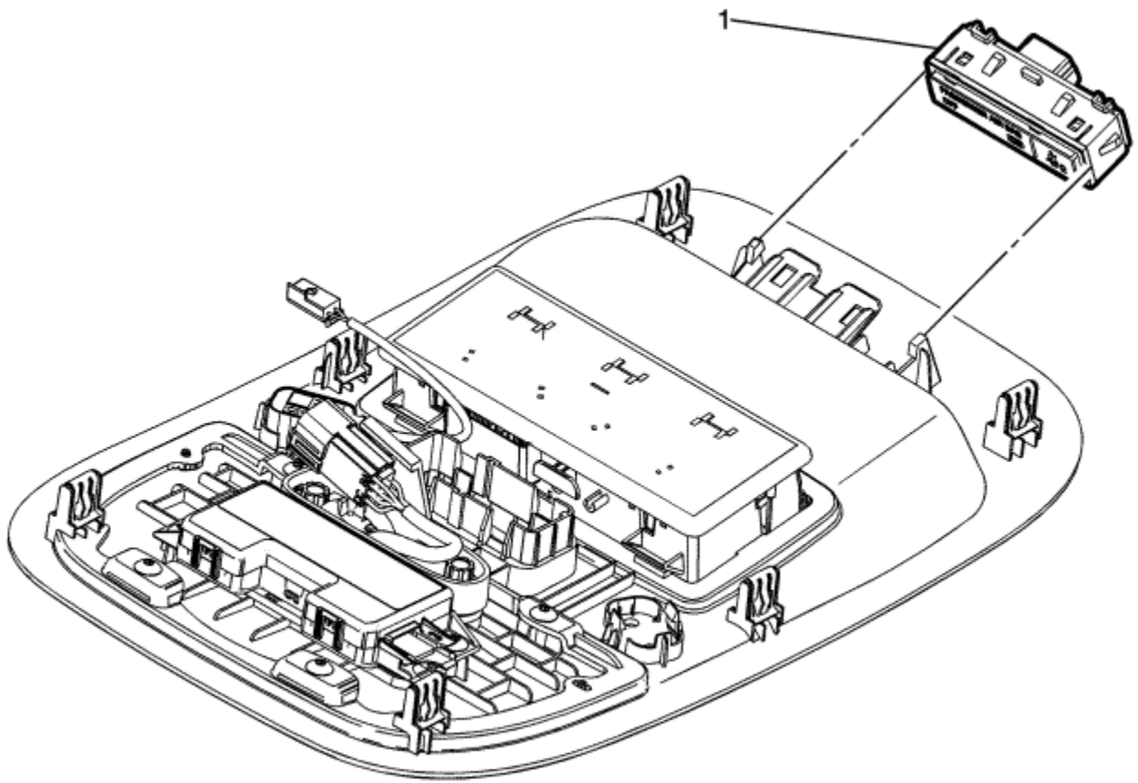

Callout	Component Name
Preliminary Procedure Remove the roof console. Refer to Roof Console Replacement .	
	Inflatable Restraint Instrument Panel Module Indicator Assembly

1	**Procedure** Unsnap the indicator from the roof console bezel.

© Copyright Chevrolet. All rights reserved

Roof Side Rail Inflatable Restraint Module Replacement

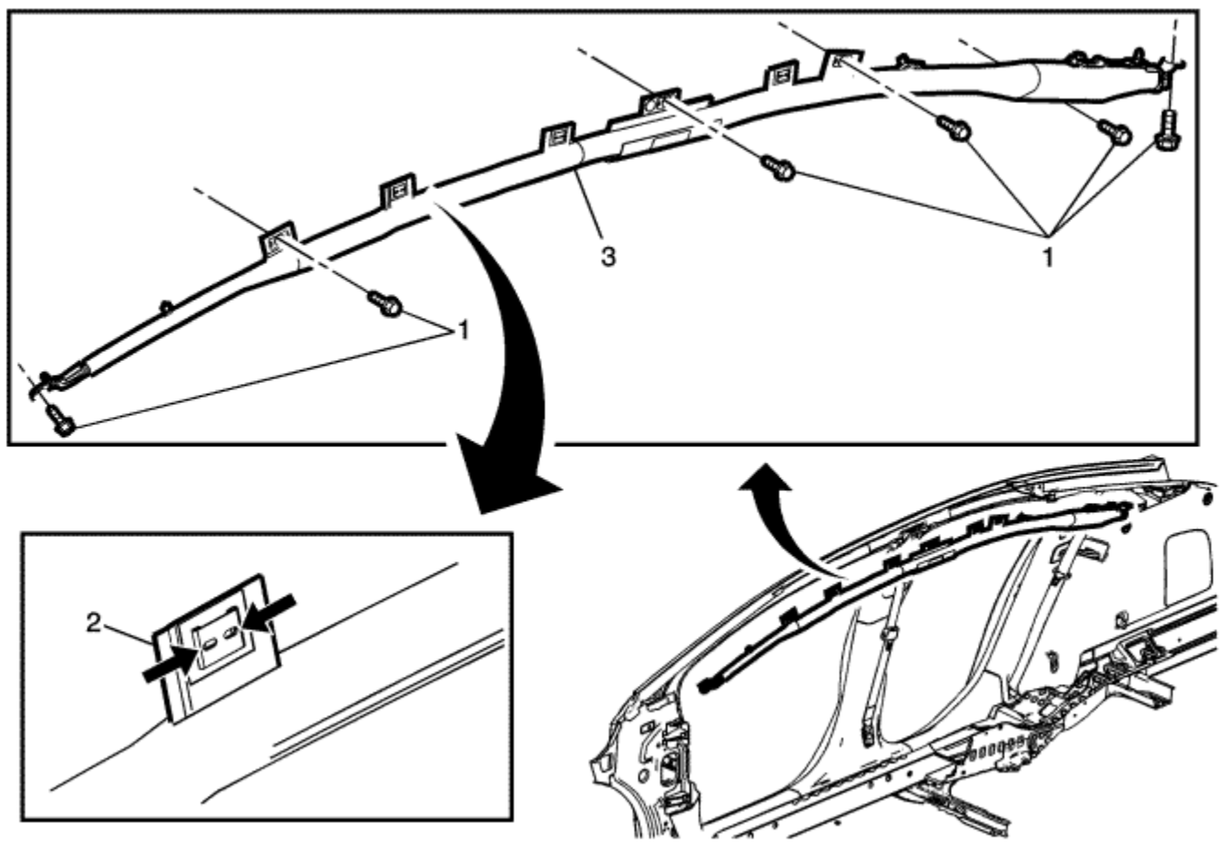

Callout	Component Name
Warning: In order to prevent SIR deployment, personal injury, or unnecessary SIR system repairs, do not strike the door or the door pillar in the area of the side impact sensor (SIS). Turn OFF the ignition and remove the key when performing service in the area of the SIS. **Warning:** When installing the roof rail airbag, do not twist or turn the airbag 360 degrees. Securing the roof rail airbag with an airbag twisted or turned 360 degrees may cause the airbag not to deploy correctly and could cause personal injury.	

Warning: Refer to SIR Warning in the Preface section.

Warning: Refer to SIR Inflator Module Handling and Storage Warning in the Preface section.

Preliminary Procedures

1. Disable the SIR system. Refer to SIR Disabling and Enabling .
2. It is only necessary to lower the headliner. Only do those steps in headliner replacement that will lower the headliner enough to gain access to the part. Refer to Headlining Trim Panel Replacement .

1	Roof Side Rail Inflatable Restraint Module Fastener (Qty: 6) **Caution:** Refer to Fastener Caution in the Preface section. **Tighten** 9 N·m (80 lb in)
2	Roof Side Rail Inflatable Restraint Module Clips (Qty: 4) **Procedure** Press the locking tabs together to remove the clip.
3	Roof Side Rail Inflatable Restraint Module Assembly **Procedure** 1. Disconnect the electrical connector. 2. Remove the 4 push in retainers securing the roof side rail inflatable restraint module to the vehicle. 3. Remove the roof side rail inflatable restraint module from the vehicle. 4. Fully deploy the module before disposal. If the module was replaced under warranty, fully deploy and dispose of the module after the required retention period. Refer to Inflatable Restraint Module Handling and Scrapping . **Tip** The bolts and the push in fasteners are an integral part of the module and should remain with the module.

© Copyright Chevrolet. All rights reserved

Front Seat Belt Anchor Plate Tensioner Replacement

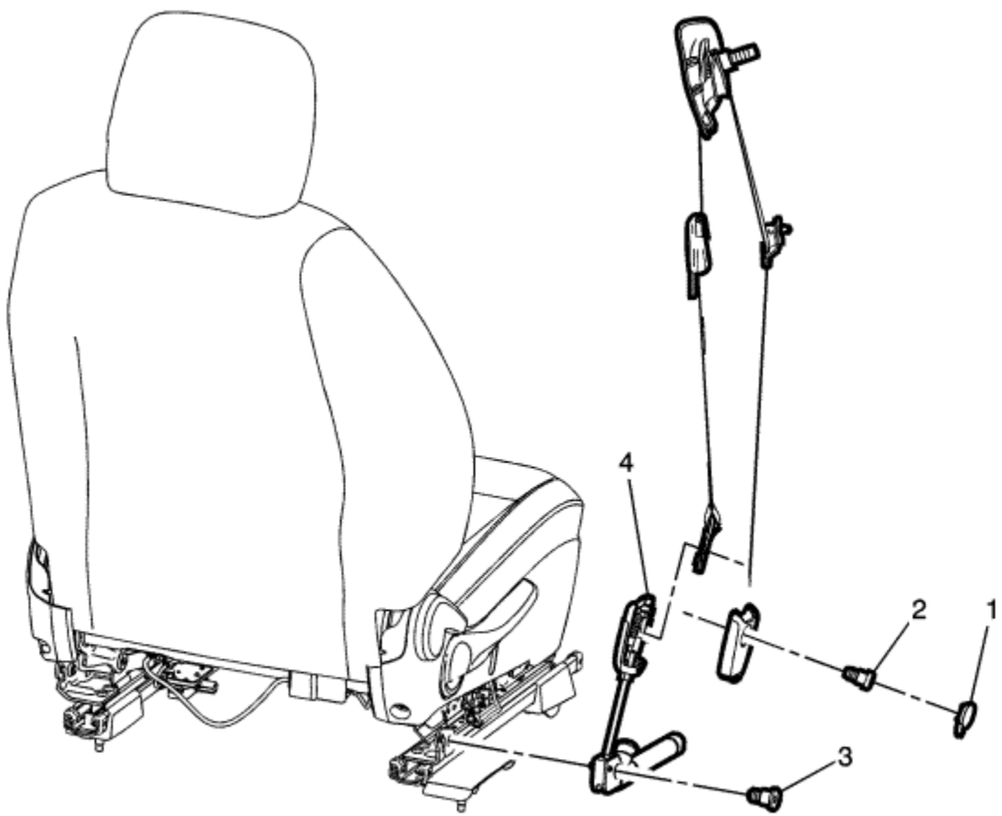

Callout	Component Name
Warning: Refer to SIR Warning in the Preface section. **Warning:** Refer to SIR Seatbelt Pretensioner Handling Warning in the Preface section. **Warning:** In order to prevent accidental deployment and the risk of personal injury, do not dispose of an undeployed inflatable restraint seat belt pretensioner as normal shop waste. Undeployed seat belt pretensioners contain substances that could cause severe illness or personal injury if their sealed containers are damaged during disposal. Use	

the following deployment procedures to safely dispose of an undeployed seat belt pretensioner. Failure to observe the following disposal methods may be a violation of federal, state, or local laws.

Preliminary Procedures

1. Move the front seat to the full forward and full up position.
2. Disable the SIR. Refer to SIR Disabling and Enabling .
3. Remove the driver or passenger seat cushion closeout cover. Refer to Driver or Passenger Seat Cushion Closeout Cover Replacement .

1	Front Seat Belt Anchor Plate Tensioner Cover Assembly
2	Front Seat Belt Anchor Plate Tensioner Fastener **Caution:** Refer to Fastener Caution in the Preface section. **Tighten** 7.5 N·m (66 lb in)
3	Front Seat Belt Anchor Plate Tensioner Assembly Fastener **Tighten** 45 N·m (33 lb ft)
4	Front Seat Belt Anchor Plate Tensioner Assembly **Procedure** Disconnect the electrical connector.

© Copyright Chevrolet. All rights reserved

Driver or Passenger Seat Retractor Side Belt Replacement

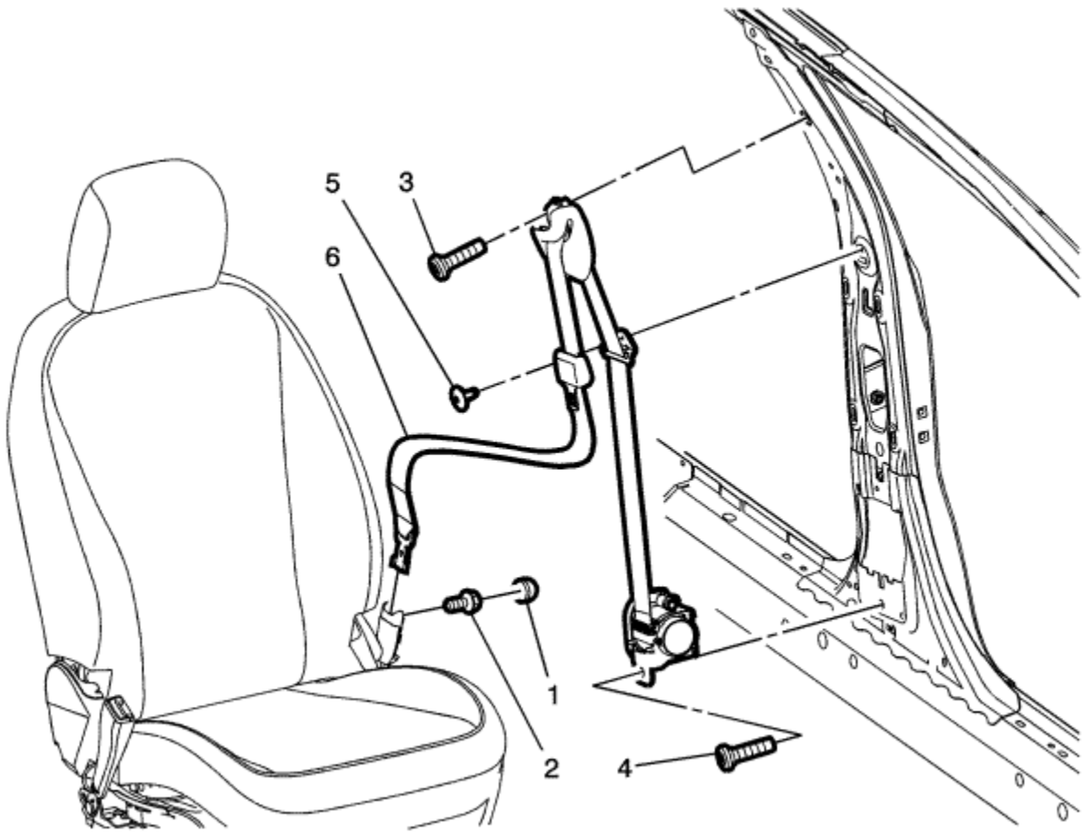

Callout	Component Name
Warning: Refer to SIR Warning in the Preface section. **Warning:** Refer to SIR Inflator Module Handling and Storage Warning in the Preface section. **Preliminary Procedures**	

1. Move the front seat to a full forward and full up position.
2. Disable the SIR. Refer to SIR Disabling and Enabling .
3. Remove the centre pillar trim panel. Refer to Centre Pillar Trim Panel Replacement .

1	Driver or Passenger Seat Belt Tensioner Cover Assembly
2	Driver or Passenger Seat Belt Tensioner Fastener **Caution:** Refer to Fastener Caution in the Preface section. **Tighten** 7.5 N·m (66 lb in)
3	Driver or Passenger Seat Shoulder Belt Fastener **Tighten** 45 N·m (33 lb ft)
4	Driver or Passenger Shoulder Belt Retractor Fastener **Tighten** 45 N·m (33 lb ft)
5	Driver or Passenger Seat Belt Push On Retainer **Procedure** Use a flat-bladed tool to remove locking pin in retainer.
6	Driver or Passenger Seat Shoulder Belt Retractor Assembly **Procedure** Disconnect the electrical connector.

© Copyright Chevrolet. All rights reserved

Inflatable Restraint Module Handling and Scrapping

Live and Undeployed Air Bag

Warning: Refer to SIR Inflator Module Handling and Storage Warning in the Preface section.

Take special care when handling or storing an undeployed air bag. An air bag deployment produces a rapid generation of gas. This may cause the air bag, or an object in front of the air bag, to project through the air in the event of an unlikely deployment.

Dual Stage Air Bags

Dual stage air bags have two deployment stages. If stage 1 was used to deploy a dual stage air bag, stage 2 may still be active. Therefore, a deployed dual stage air bag must be treated as an active air bag. If disposal of a dual stage air bag is required, both deployment loops must be energised to deploy the air bag.

Scrapping Procedure

At the end of a vehicle's useful life, certain situations may arise which will require the disposal of a live and undeployed air bag. Do NOT dispose a live and undeployed air bag through normal disposal channels until the air bag has been deployed.

Do not deploy the air bag in the following situations:

- After replacement of an air bag under warranty--the air bag may need to be returned undeployed to the manufacturer.
- If the vehicle is the subject of a product liability claim, related to the SIR system and is subject to a preliminary investigation -- do NOT alter the SIR system in any manner.
- If the vehicle is involved in a campaign affecting the air bags -- follow the instructions in the campaign service bulletin for proper SIR handling procedures.

Deployment Procedures

Note: Some countries, states or localities may not allow service deployment of air bags without special permission or training. Local laws regarding deploying and scrapping of air bags/devices with pyrotechnics must be followed.

You can only deploy the air bag inside of the vehicle.

Deployment Inside Vehicle - Vehicle Scrapping Procedure

Deploy the air bags inside of the vehicle when destroying the vehicle or when salvaging the vehicle for parts. This includes, but is not limited to, the following situations:

- The vehicle has completed all useful life.
- Irreparable damage occurred to the vehicle in a non-deployment type accident.
- Irreparable damage occurred to the vehicle during a theft.
- The vehicle is being salvaged for parts to be used on a vehicle with a different VIN, as opposed to rebuilding as the same VIN.

Warning: Refer to SIR Inflatable Module Deployment Outside Vehicle Warning in the Preface section.

1. Lower the driver and passenger windows.
2. Turn the ignition switch to the OFF position and remove the ignition key.
3. Check that all air bags which will be deployed are mounted securely.
4. Remove all loose objects from the front seats.

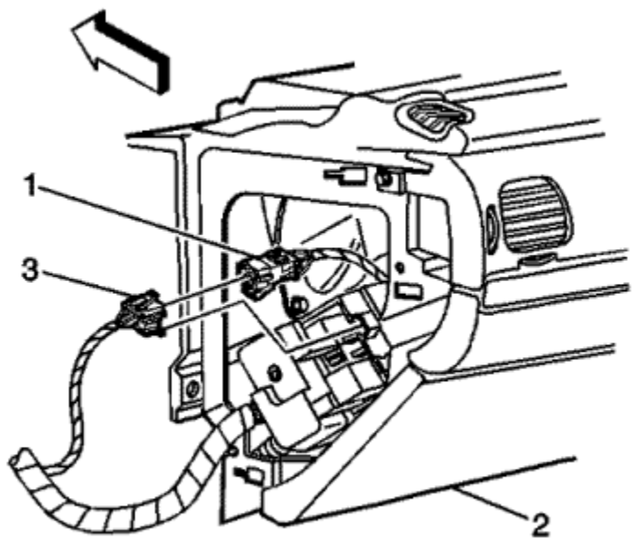

Warning: A deployed dual stage inflator module will look the same whether one or both stages were used. Always assume a deployed dual stage inflator module has an active stage 2. Improper handling or servicing can activate the inflator module and cause personal injury.

5. Disconnect the steering wheel air bag yellow connector (1) from vehicle harness yellow connector (3).

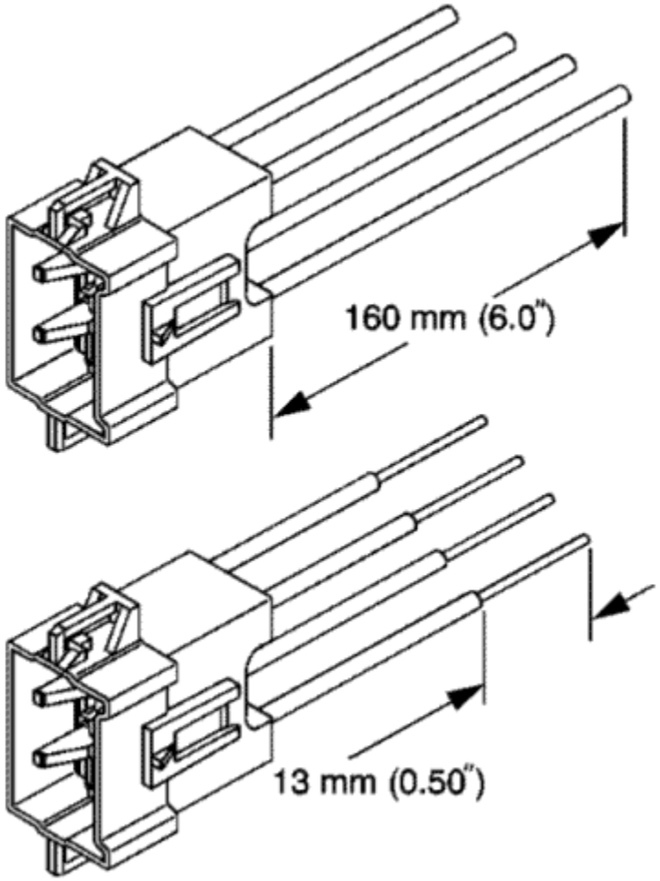

Note: If the vehicle is equipped with dual stage air bags the steering wheel air bag and instrument panel air bag will each have 4 wires. Refer to Component Connector End Views for determining high and low circuits.

6. Cut the yellow harness connector out of the vehicle, leaving at least 16 cm (6 in) of wire at the connector.
7. Strip 13 mm (0.5 in) of insulation from each of the connector wire leads.

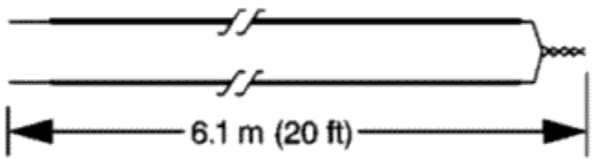

8. Cut two 6.1 m (20 ft) deployment wires from a 0.8 mm (18 gauge) or thicker multi-strand wire. Use these wires to fabricate the driver deployment harness.
9. Strip 13 mm (0.5 in) of insulation from both ends of the wires.
10. Twist together one end from each of the wires in order to short the wires. Deployment wires shall remain shorted, and not connected to a power source until you are ready to deploy the air bag.

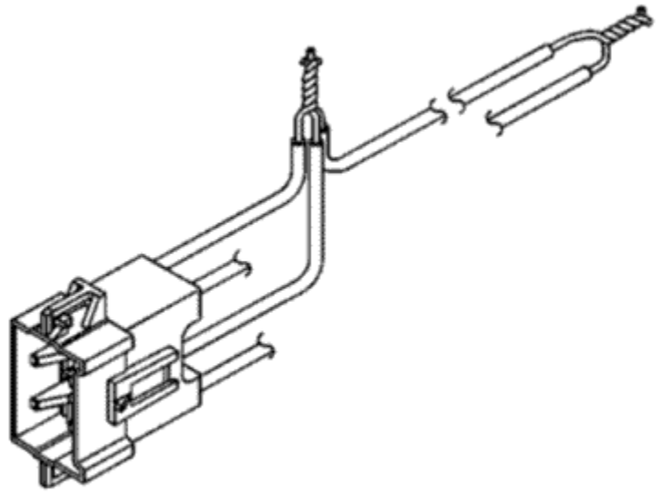

11. Twist together the 2 connector wire leads from the high circuits from both stages of the steering wheel air bag, to one set of deployment wires. Refer to Component Connector End Views in order to determine the correct circuits.
12. Inspect that the 3-wire connection is secure.
13. Secure and insulate the 3-wire connection to the deployment harness using electrical tape.

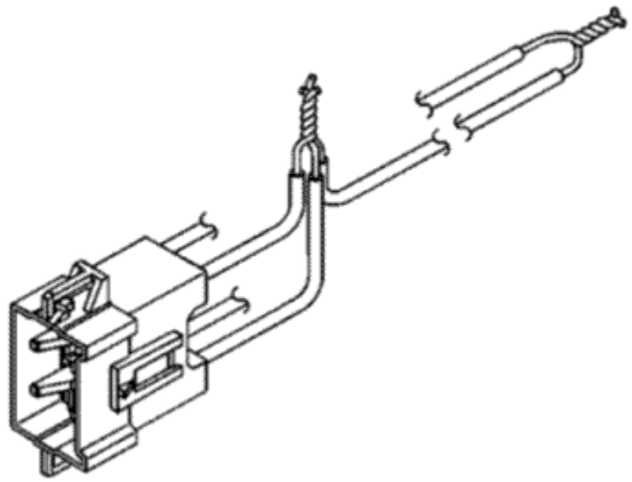

14. Twist together the 2 connector wire leads from the low circuits from both stages of the steering wheel air bag, to one set of deployment wires. Refer to Component Connector End Views in order to determine the correct circuits.
15. Inspect that the 3-wire connection is secure.
16. Secure and insulate the 3-wire connection to the deployment harness using electrical tape.
17. Connect the deployment harness to the connector on the steering wheel air bag.
18. Route the deployment harness out of the driver side of the vehicle.
19. Disconnect the yellow left roof rail harness connector from the vehicle harness connector.
20. Cut the harness connector out of the vehicle, leaving at least 16 cm (6 in) of wire at the connector.
21. Strip 13 mm (0.5 in) of insulation from each of the connector wire leads.
22. Cut two 6.1 m (20 ft) deployment wires from a 0.8 mm (18 gauge) or thicker multi-strand wire. These wires will be used to fabricate the roof rail air bag deployment harness.
23. Strip 13 mm (0.5 in) of insulation from both ends of the wires.
24. Twist together one end from each of the wires in order to short the wires.
25. Twist together one connector wire lead to one deployment wire.
26. Secure and insulate the connection using electrical tape.
27. Twist together and tape the remaining connector wire lead to the remaining deployment wire.
28. Connect the deployment harness to the yellow connector of the roof rail air bag.
29. Route the deployment harness out of the driver side of the vehicle.

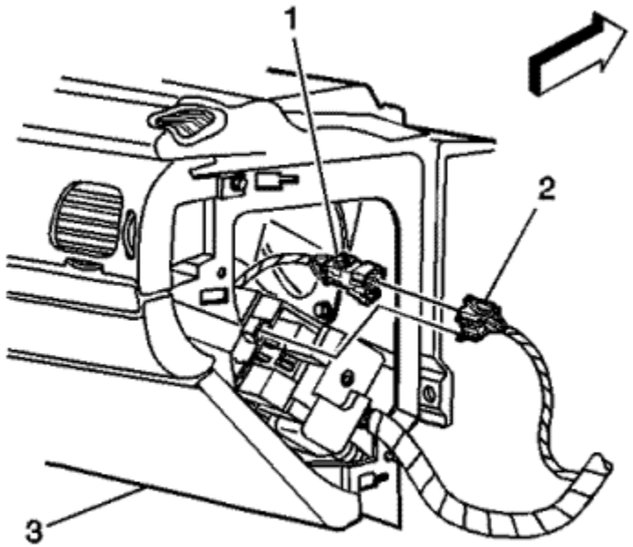

30. Disconnect the instrument panel air bag yellow harness connector (1) from the vehicle harness connector (2).

    Note: If the vehicle is equipped with dual stage air bags the steering wheel air bag and instrument panel air bag will each have 4 wires. Refer to Component Connector End Views for determining high and low circuits.

31. Cut the yellow harness connector out of the vehicle, leaving at least 16 cm (6 in) of wire at the connector.
32. Strip 13 mm (0.5 in) of insulation from each of the connector wire leads.
33. Cut two 6.1 m (20 ft) deployment wires from a 0.8 mm (18 gauge) or thicker multi-strand wire. These wires will be used to fabricate the passenger deployment harness.
34. Strip 13 mm (0.5 in) of insulation from both ends of the wires.
35. Twist together one end from each of the wires in order to short the wires.
36. Twist together the 2 connector wire leads from the high circuits from both stages of the instrument panel air bag to one set of deployment wires. Refer to Component Connector End Views in order to determine the correct circuits.
37. Inspect that the 3-wire connection is secure.
38. Secure and insulate the 3-wire connection to the deployment harness using electrical tape.
39. Twist together the 2 connector wire leads from the low circuits from both stages of the instrument panel air bag to one set of deployment wires. Refer to Component Connector End Views in order to determine the correct circuits.
40. Inspect that the 3-wire connection is secure.
41. Secure and insulate the 3-wire connection to the deployment harness using electrical tape.
42. Connect the deployment harness to the instrument panel air bag in-line connector.
43. Route the deployment harness out of the passenger side of the vehicle.
44. Disconnect the yellow harness connector to the right roof rail air bag from the vehicle harness connector.
45. Cut the harness connector out of the vehicle, leaving at least 16 cm (6 in) of wire at the connector.

46. Strip 13 mm (0.5 in) of insulation from each of the connector wire leads.
47. Cut two 6.1 m (20 ft) deployment wires from a 0.8 mm (18 gauge) or thicker multi-strand wire. These wires will be used to fabricate the roof rail air bag deployment harness.
48. Strip 13 mm (0.5 in) of insulation from both ends of the wires.
49. Twist together one end from each of the wires in order to short the wires.
50. Twist together one connector wire lead to one deployment wire.
51. Secure and insulate the connection using electrical tape.
52. Twist together and tape the remaining connector wire lead to the remaining deployment wire.
53. Connect the deployment harness to the roof rail air bag yellow connector.
54. Route the deployment harness out of the passenger side of the vehicle.
55. Completely cover the windscreen and the front door window openings with a drop cloth.
56. Stretch to the full length all of the deployment harness wires on the right side of the vehicle.
57. Deploy each deployment loop one at a time.
58. Place a power source, 12 V minimum/2A minimum, such as a vehicle battery, near the shorted end of the harnesses.
59. Separate one set of wires and touch the wire ends to the power source in order to deploy the selected air bag.
60. Disconnect the deployment harness from the power source and twist the wire ends together.
61. Continue the same process with the remaining deployment harnesses.
62. Disconnect all harnesses from the vehicle.
63. Discard the harnesses.
64. Scrap the vehicle in the same manner as a non-SIR equipped vehicle.
65. If one or all of the air bags did not deploy, remove the undeployed air bags from the vehicle.

&#169© Copyright Chevrolet. All rights reserved

Pretensioner Handling and Scrapping

Scrapping Procedure

During the course of a vehicle's service life, certain situations may arise which will necessitate the disposal of a live (undeployed) pretensioner. The following information covers the proper procedures for the disposing of a live (undeployed) pretensioner. Do not dispose of a live (undeployed) pretensioner through normal disposal channels until the pretensioner has been deployed. The following information covers the proper procedures for the disposing of a live (undeployed) pretensioner.

- After replacement of a pretensioner under warranty. The pretensioner may need to be returned undeployed to the original manufacturer of pretensioner.
- If the vehicle is the subject of a Product Liability report related to the SIR system and is subject to a Preliminary Investigation (GM-1241). Do not alter the SIR system in any manner.
- If the vehicle is involved in a campaign affecting the pretensioners. Follow the instructions in the Campaign Service Bulletin for proper SIR handling procedures.

Deployment Procedures

Note: Some countries, states or localities may not allow service deployment of air bags without special permission or training. Local laws regarding deploying and scrapping of air bags/devices with pyrotechnics must be followed.

The pretensioner can only be deployed inside of the vehicle. Refer to Inflatable Restraint Module Handling and Scrapping for deploying the pretensioner inside vehicle under Vehicle Scrapping Procedure.

&#169© Copyright Chevrolet. All rights reserved

SIR System Description and Operation

SIR System Overview

The supplemental inflatable restraint (SIR) system supplements the protection offered by the seat belts. The SIR system contains an inflatable restraint sensing and diagnostic module (SDM), air bags, seat belt pretensioners (anchor and retractor), and impact sensors. The SDM determines the severity of a collision with the assistance of impact sensors located at strategic points on the vehicle. When the SDM detects a collision, the SDM will process the information provided by the impact sensors to further support air bag or pretensioner deployment. The SDM will deploy the air bags and pretensioners if it detects a collision of sufficient force. If the force of the impact is not sufficient to warrant air bag deployment, the SDM may still deploy the seat belt pretensioners. The SDM contains a sensing device that converts vehicle velocity changes to an electrical signal. The SDM compares these signals to values stored in memory. If the signals exceed a stored value, the SDM will determine the severity of the impact and either cause current to flow through the frontal deployment loops deploying the frontal air bags and pretensioners, or it will deploy the pretensioners only. The SDM continuously monitors the deployment loops for malfunctions and illuminates the AIR BAG indicator if a fault is detected.The SDM performs continuous diagnostic monitoring of the SIR system electrical components. Upon detection of a circuit malfunction, the SDM will set a DTC and inform the driver by illuminating the AIR BAG indicator. The steering column and knee bolsters are designed to absorb energy and compress during frontal collisions in order to limit leg movement and decrease the chance of injury to the driver and passenger.

AIR BAG Indicator (Driver)

The AIR BAG indicator, located in the instrument cluster, is used to notify the driver of SIR system malfunctions and to verify that the inflatable restraint sensing and diagnostic module (SDM) is communicating with the instrument cluster. When the ignition is turned ON, the SDM is supplied with ignition positive voltage. The instrument cluster will momentarily turn on the AIR BAG indicator. While the indicator is on, the SDM conducts tests on all SIR system components and circuits. If no malfunctions are detected the SDM will communicate with the instrument cluster through the serial data circuit and command the AIR BAG indicator OFF. The SDM provides continuous monitoring of the air bag circuits by conducting a sequence of checks. If a malfunction is detected the SDM will store a diagnostic trouble code (DTC) and command the instrument cluster to illuminate the AIR BAG indicator via serial data. The presence of a SIR system malfunction could result in non-deployment of the air bags or deployment in conditions less severe than intended. The AIR BAG indicator will remain ON until the malfunction has been repaired.

Inflatable Restraint Sensing and Diagnostic Module (SDM)

The inflatable restraint sensing and diagnostic module (SDM) is a microprocessor and the control center for the supplemental inflatable restraint (SIR) system. The SDM contains internal sensors along with external impact sensors, mounted at strategic locations on the vehicle. In the event of a collision, the SDM compares the signals from the internal and external impact sensors to a value stored in memory. When the generated signals exceed the stored value, the SDM will cause current to flow through the appropriate deployment loops to deploy the air bags. The SDM records the SIR system status when a deployment occurs and illuminates the AIR BAG indicator located in the instrument cluster. The SDM performs continuous diagnostic monitoring of the SIR system electrical components and circuitry when the ignition is turned ON. If the SDM detects a malfunction, a DTC will be stored and the SDM will request the instrument cluster to illuminate the AIR BAG indicator, notifying the driver that a malfunction exists. In

the event that ignition positive voltage is lost during a collision, the SDM maintains a 23-volt loop reserve for deployment of the air bags. It is important when disabling the SIR system for servicing or rescue operations to allow the 23-volt loop reserve to dissipate, which could take up to 1 minute.

Air Bags

This vehicle contains 8 air bags. The 8 air bags are located in the steering wheel (dual air bags), instrument panel (passenger side) (dual air bags), driver seat side (B-pillar), passenger seat side (B-pillar), left roof rail, right roof rail, driver knee (instrument panel), passenger knee (instrument panel). To view the locations of the air bags refer to SIR Identification Views . Air bags contain a housing, inflatable air bag, two initiating devices (if dual air bag), canister of gas generating material and, in some cases, stored compressed gas. The deployment loops supply current through the air bags to deploy the air bags. The steering wheel and passenger instrument panel air bags have two stages of deployment, which varies the amount of restraint to the occupant according to the collision severity. For moderate frontal collisions the air bags deploy at less than full deployment which consists of stage 1 of the air bag. For more severe frontal collisions a full deployment is initiated which consists of stage 1 and stage 2 of the air bag. The current passing through the air bags ignite the material in the canister producing a rapid generation of gas and is some cases, the release of compressed gas. The gas produced from this reaction rapidly inflates the air bag. Once the air bag is inflated it quickly deflates through the air bag vent holes and/or the bag fabric. Each air bag is equipped with a shorting bar located in the connectors of the air bag. The shorting bar shorts the air bag deployment loop circuitry to prevent unwanted deployment of the air bag when it is disconnected.

Seat Belt Pretensioners (Anchor and Retractor)

The seat belt pretensioners (driver and passenger) consist of a housing, seat belt retractor (located in the B-pillar), seat belt anchor (located on the floor), seat belt webbing, an initiator, and a canister of gas generating materials. To view the locations of the seat belt pre-tensioners refer to SIR Identification Views . The initiator is part of the seat belt pretensioner deployment loop. When the vehicle is involved in a collision of sufficient force, the SDM causes current to flow through the seat belt deployment loops to the initiator. Current passing through the initiator ignites the material in the canister producing a rapid generation of gas. The gas produced from this reaction deploys the seat belt pretensioners which removes all of the slack in the seat belts. Depending on the severity of the collision, the seat belt pretensioners may deploy without the frontal air bags deploying, or they will deploy immediately before the frontal air bags deploy. Each seat belt pretensioner is equipped with a shorting bar that is located in the connector of the seat belt pretensioner. The shorting bar shorts the seat belt pretensioner circuitry to prevent unwanted deployment of the seat belt pretensioner when the connector is disconnected.

Impact Sensors

This vehicle contains 6 impact sensors. The 6 impact sensors are located in the front of the vehicle (2, left and right), and one in each of the four doors. To view the locations of the impact sensors refer to SIR Identification Views . The impact sensors contain a sensing device which monitors vehicle acceleration and velocity changes to detect side collisions that are severe enough to warrant air bag deployment. The impact sensors are not part of the deployment loop, but instead provide input to the SDM. The SDM contains a microprocessor that performs calculations using the measured accelerations and compares these calculations to a value stored in memory. When the generated calculations exceed the stored value, the SDM will cause current to flow through the deployment loops deploying the appropriate air bags.

Passenger Presence Detection System and Air Bag Indicator (Passenger)

Note: The passenger presence system (PPS) is a calibrated unit. When replacing the assembly all parts in the service kit must remain together. Do not mix any of the old parts with the new parts. After repairing or replacing the PPS, the preload test must be performed in order to function properly.

The passenger presence detection system (PPS) is used to monitor the type of occupant that is sitting in the front passenger seat and communicate the status to the inflatable

restraint sensing and diagnostic module (SDM). The SDM then uses this information to determine whether to enable or suppress the deployment of the passenger instrument panel air bag. The PPS consists of an electronic control module, a sensor mat in the seat, a harness, and PASSENGER AIR BAG ON/OFF indicators. The PPS transmits and receives a low-level electric field. The measured capacitance value of this field is used to determine the type of occupant sitting in the front passenger seat. If the measured capacitance is less than a calibrated value, then the passenger presence module will send a serial data signal to the SDM to disable the passenger instrument panel air bag. If the measured capacitance is greater than a calibrated value, then the passenger presence module will send a serial data signal to the SDM to enable the passenger instrument panel air bag. The SDM will notify the customer of the enable/disable status by illuminating one of the PASSENGER AIR BAG ON/OFF indicator. PPS monitors itself for faults and will displays diagnostic trouble codes (DTCs) on the scan tool. When a fault is detected, the passenger presence module sends out a message to the SDM. The SDM responds by sending a command message to the IPC to illuminate the AIR BAG indicator.

Seat Belt Indicators

The seat belt indicators are controlled through the inflatable restraint sensing and diagnostic module (SDM). For further information on seat belt indicators refer to Seat Belt System Description and Operation .

© Copyright Chevrolet. All rights reserved

Special Tools

Illustration	Tool Number/ Description
	EL 38826 J 38826 SIR Deployment Harness
	EL 39401-B J 39401-B

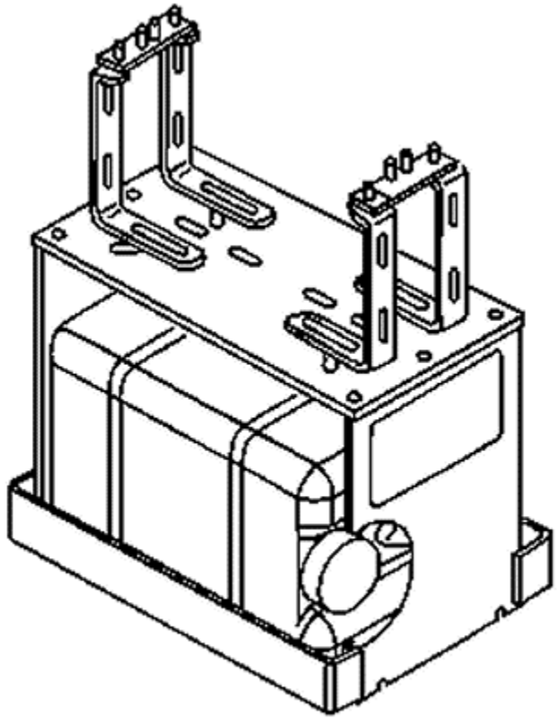	SIR Deployment Fixture

© Copyright Chevrolet. All rights reserved

Theft Deterrent System Schematics

Theft Deterrent System

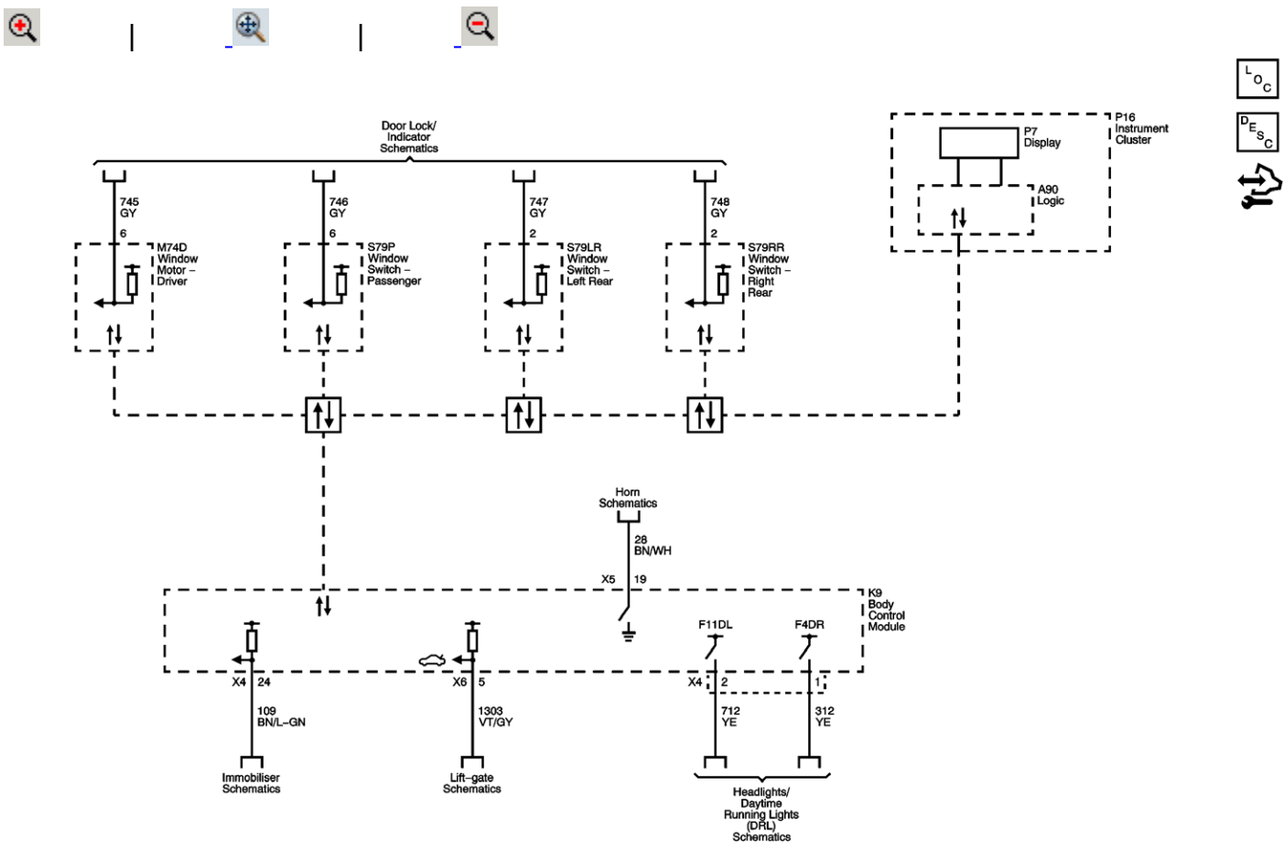

Master Electrical Component List

Theft Systems Description and Operation

Door Ajar Switches

Data Communication Schematics

Horns

F1DL, F2DL, F3DL, F4DL, F5DL, F6DL, F7DL, F10DL, F11DL and F15DL Fuses

F4DR, F5DR, F6DR, F7DR, F8DR, F9DR, F10DR, F11DR and F12DR Fuses

Immobiliser

Tailgate Release

Daytime Running Lamps and Dipped Beams

© Copyright Chevrolet. All rights reserved

Symptoms - Theft Deterrent

Note: The following steps must be completed before using the symptom tables.

1. Perform Diagnostic System Check - Vehicle in order to verify that all of the following are true:
   - There are no DTCs set.
   - The control modules can communicate via the serial data link.
2. Review the system operation in order to familiarize yourself with the system functions. Refer to the following Theft Systems Description and Operation .

Visual/Physical Inspection

- Inspect for aftermarket devices which could affect the operation of the Theft Deterrent System. Refer to Checking Aftermarket Accessories .
- Inspect the easily accessible or visible system components for obvious damage or conditions which could cause the symptom.

Intermittent

Faulty electrical connections or wiring may be the cause of intermittent conditions. Refer to Testing for Intermittent Conditions and Poor Connections .

Symptom List

Refer to a symptom diagnostic procedure from the following list in order to diagnose the symptom:

- Content Theft Deterrent Malfunction
- Inclination/Intrusion Sensor Malfunction
- Theft Deterrent Alarm Malfunction

&#169© Copyright Chevrolet. All rights reserved

Content Theft Deterrent Malfunction

Diagnostic Instructions

- Perform the Diagnostic System Check - Vehicle prior to using this diagnostic procedure.
- Review Strategy Based Diagnosis for an overview of the diagnostic approach.
- Diagnostic Procedure Instructions provides an overview of each diagnostic category.

Circuit/System Description

The content theft deterrent system is a software based system in which the body control module (BCM) actively monitors certain inputs to determine if unauthorised vehicle access is being attempted. Based on inputs such as the door ajar switches, the rear compartment ajar switch, and the bonnet ajar switch, the BCM determines whether a content theft deterrent alarm is warranted. If unauthorised access is being detected, the BCM will pulse the vehicle horn and flash the exterior lamps as a means of theft deterrence.

Diagnostic Aids

The scan tool BCM Content Theft Deterrent Trigger History 1, 2, and 3 parameters can be used to help isolate an intermittent unwanted content theft deterrent alarm. These parameters are a rolling history of the previous three causes of a theft deterrent alarm. If all three parameters are indicating the same alarm trigger, the indicated input should be the starting point when diagnosing an intermittent concern.

Reference Information

Schematic Reference

Theft Deterrent System Schematics

Connector End View Reference

Component Connector End Views

Description and Operation

Theft Systems Description and Operation

Electrical Information Reference

- Circuit Testing
- Connector Repairs
- Testing for Intermittent Conditions and Poor Connections
- Wiring Repairs

Scan Tool Reference

Control Module References for scan tool information

Circuit/System Verification

1. Vehicle OFF.
2. Verify the intrusion sensor disable indicator turn ON and OFF when pressing and releasing the intrusion/inclination sensor disable switch.
   If the indicator does not turn ON and OFF
   Refer to Inclination/Intrusion Sensor Malfunction
   If the indicator turns ON and OFF
3. Verify each indicator/message transition between the ajar and closed state while opening and closing each vehicle door, bonnet, and rear compartment.
   If the indicator/message does not change
   Refer to Door Ajar Indicator Malfunction or Rear Hatch/Gate Ajar Indicator Malfunction .
   If each indicator/message changes
4. Vehicle in Service Mode, completely lower the driver door window and close all vehicle doors, vehicle OFF.
5. Arm the content theft deterrent system by locking the door with the keyless entry transmitter.
6. Verify the scan tool BCM Content Theft Deterrent Alarm Status parameter is Armed.
   If not Armed
   Refer to Keyless Entry System Malfunction : Passive → Active .
   If Armed
7. Without disarming the system, reach in through the open driver window and open the driver door.
8. Verify the scan tool BCM Content Theft Deterrent Alarm Status parameter is Alarm.
   If not Alarm
   Replace the K9 BCM.
   If Alarm
9. Verify the theft deterrent alarm is sounding.
   If the theft deterrent alarm is not sounding
   Refer to Theft Deterrent Alarm Malfunction

If the theft deterrent alarm is sounding

10. All OK.

Repair Instructions

Perform the Diagnostic Repair Verification after completing the diagnostic procedure.

Control Module References for BCM replacement, setup, and programming

&#169© Copyright Chevrolet. All rights reserved

Inclination/Intrusion Sensor Malfunction

Diagnostic Instructions

- Perform the Diagnostic System Check - Vehicle prior to using this diagnostic procedure.
- Review Strategy Based Diagnosis for an overview of the diagnostic approach.
- Diagnostic Procedure Instructions provides an overview of each diagnostic category.

Diagnostic Fault Information

Circuit	Short to Ground	Open/High Resistance	Short to Voltage	Signal Performance
Intrusion/inclination Sensor B+	1	1	--	--
Intrusion/inclination Sensor Disable Indicator Control	2	2	3	-
Intrusion/inclination Sensor Disable Switch Signal	4	4	4	-
Intrusion/inclination Sensor Ground	--	1	--	--
Intrusion/inclination Sensor Disable Switch Ground	-	4	--	--

1. Intrusion/inclination Sensor Inoperative
2. Intrusion/inclination Sensor Indicator Inoperative
3. Intrusion/inclination Sensor Indicator Always On
4. Intrusion/inclination Sensor Indicator Will Not Turn ON and OFF

Circuit/System Description

The content theft deterrent intrusion/inclination sensor is a multifunction sensor which detects motion inside the vehicle (intrusion), as well as change in the vehicle level (inclination). The intrusion/inclination sensor is supplied power and ground for operation and communicates with the body control module (BCM) via a dedicated LAN circuit. The sensor may be turned on or off using the disable switch and will display its status through the status LED.

Reference Information

Schematic Reference

Immobiliser Schematics

Connector End View Reference

Component Connector End Views

Description and Operation

Keyless Entry System Description and Operation

Electrical Information Reference

- Circuit Testing
- Connector Repairs
- Testing for Intermittent Conditions and Poor Connections
- Wiring Repairs

Scan Tool Reference

Control Module References for scan tool information

Circuit/System Verification

1. Vehicle in Service Mode.
2. Verify the intrusion sensor disable indicator turn ON and OFF when pressing and releasing the intrusion/inclination sensor disable switch.
   If the indicator does not turn ON and OFF
   Refer to Circuit/System Testing.

Circuit/System Testing

1. Vehicle OFF and all vehicle systems OFF, disconnect the harness connector at the S48B multi-function switch - overhead console. It may take up to 2 minutes for all vehicle systems to power down.
2. Test for less than 10 Ω between the ground circuit terminal 2 and ground.
   If 10 Ω or greater
   2.1. Vehicle OFF
   2.2. Test for less than 2 Ω in the ground circuit end to end.
   If 2 Ω or greater, repair the open/high resistance in the circuit.
   If less than 2 Ω, repair the open/high resistance in the ground connection.

If less than 10 Ω

3. Connect the harness connector at the S48B multi-function switch - overhead console. Disconnect the harness connector at the B67 ultrasonic intrusion sensor. It may take up to 2 minutes for all vehicle systems to power down.
4. Test for less than 10 Ω between the ground circuit terminal 5 and ground.

If 10 Ω or greater

4.1. Vehicle OFF
4.2. Test for less than 2 Ω in the ground circuit end to end.
If 2 Ω or greater, repair the open/high resistance in the circuit.
If less than 2 Ω, repair the open/high resistance in the ground connection.

If less than 10 Ω

5. Vehicle in Service Mode.
6. Verify a test lamp illuminates between the B+ circuit terminal 3 and ground.

If the test lamp does not illuminate and the circuit fuse is good

6.1. Vehicle OFF.
6.2. Test for less than 2 Ω in the B+ circuit end to end.
If 2 Ω or greater, repair the open/high resistance in the circuit.
If less than 2 Ω, verify the fuse is not open and there is voltage at the fuse.

If the test lamp does not illuminate and the circuit fuse is open

6.1. Vehicle OFF.
6.2. Test for infinite resistance between the B+ circuit and ground.
If less than infinite resistance, repair the short to ground on the circuit.
If infinite resistance, replace the B67 ultrasonic intrusion sensor.

If the test lamp illuminates

7. Test for less than 1 V between the signal circuit terminal 1 and ground.

If 1 V or greater

7.1. Vehicle OFF, disconnect the harness connector at the S48B multi-function switch - overhead console, vehicle in Service Mode.
7.2. Test for less than 1 V between the signal circuit and ground.
If 1 V or greater, repair the short to voltage in the circuit.
If less than 1 V, replace the S48B multi-function switch - overhead console.

If less than 1 V

8. Vehicle OFF.
9. Test for infinite resistance between the signal circuit terminal 1 and ground.

If less than infinite resistance

9.1. Vehicle OFF, disconnect the harness connector at the S48B multi-function switch - overhead console.
9.2. Test for infinite resistance between the signal circuit and ground.
If less than infinite resistance, repair the short to ground on the circuit.
If infinite resistance, replace the S48B multi-function switch - overhead console.

If infinite resistance

10. Test for less than 10 Ω between the signal circuit terminal 1 and ground with the intrusion/inclination sensor switch pressed.
    If 10 Ω or greater
    10.1. Vehicle OFF, disconnect the harness connector at the S48B multi-function switch - overhead console.
    10.2. Test for less than 2 Ω in the signal circuit end to end.
    If 2 Ω or greater, repair the open/high resistance in the circuit.
    If less than 2 Ω, replace the S48B multi-function switch - overhead console.
    If less than 10 Ω
11. Vehicle in Service Mode.
12. Verify the intrusion/inclination sensor indicator is not illuminated.
    If the indicator is illuminated
    Repair the short to voltage in the circuit.
    If the indicator is not illuminated
13. Install a 3 A fused jumper wire between the control circuit terminal 2 and B+.
14. Verify the intrusion/inclination sensor indicator is illuminated.
    If the indicator is not illuminated
    14.1. Vehicle OFF, disconnect the harness connector at the S48B multi-function switch - overhead console.
    14.2. Test for infinite resistance between the signal circuit and ground.
    If less than infinite resistance, repair the short to ground on the circuit.
    If infinite resistance.
    14.3. Test for less than 2 Ω in the signal circuit end to end.
    If 2 Ω or greater, repair the open/high resistance in the circuit.
    If less than 2 Ω, replace the S48B multi-function switch - overhead console.
    If the indicator is illuminated
15. Vehicle OFF, disconnect the X6 harness connector at the K9 BCM, vehicle in Service Mode.
16. Test for less than 1 V between the serial data circuit terminal 16 X2 and ground.
    If 1 V or greater
    Repair the short to voltage in the circuit.
    If less than 1 V
17. Test for infinite resistance between the serial data circuit terminal 16 X2 and ground.
    If less than infinite resistance
    Repair the short to ground in the circuit.
    If infinite resistance
18. Test for less than 2 Ω between the serial data circuit terminal 16 at the K9 BCM X2 harness connector and the serial data circuit terminal 4 at the B67 ultrasonic intrusion sensor.
    If 2 Ω or greater
    Repair the open/high resistance in the circuit.

If less than 2 Ω

19. Test or replace the B67 ultrasonic intrusion sensor.

Repair Instructions

Perform the Diagnostic Repair Verification after completing the diagnostic procedure.

Control Module References for BCM replacement, programming and setup

&#169© Copyright Chevrolet. All rights reserved

Theft Deterrent Alarm Malfunction

Diagnostic Instructions

- Perform the Diagnostic System Check - Vehicle prior to using this diagnostic procedure.
- Review Strategy Based Diagnosis for an overview of the diagnostic approach.
- Diagnostic Procedure Instructions provides an overview of each diagnostic category.

Diagnostic Fault Information

Circuit	Short to Ground	Open/High Resistance	Short to Voltage	Signal Performance
Power Sounder B+	1	1	--	--
Power Sounder Serial Data	1	1	1	--
Power Sounder Ground	--	1	--	--
1. Power Sounder Inoperative				

Circuit/System Description

The content theft deterrent system uses the security siren as an audible alert device to alert individuals near the vehicle that a vehicle intrusion is occurring. The security is supplied power and ground for operation and communicates with the body control module (BCM) via a dedicated LAN circuit.

Reference Information

Schematic Reference

Immobiliser Schematics

Connector End View Reference

Component Connector End Views

Description and Operation

Keyless Entry System Description and Operation

Electrical Information Reference

- Circuit Testing
- Connector Repairs
- Testing for Intermittent Conditions and Poor Connections
- Wiring Repairs

Scan Tool Reference

Control Module References for scan tool information

Circuit/System Verification

1. Vehicle in Service Mode, completely lower the driver door window and close all vehicle doors, vehicle OFF.
2. Arm the content theft deterrent system by locking the door with the keyless entry transmitter.
3. Without disarming the system, reach in through the open driver window and open the driver door.
4. Verify the theft deterrent alarm is sounding.
   If the theft deterrent alarm is not sounding
   Refer to Circuit/System Testing.

Circuit/System Testing

1. Vehicle OFF and all vehicle systems OFF, disconnect the harness connector at the P25 power sounder content theft deterrent alarm module. It may take up to 2 minutes for all vehicle systems to power down.
2. Test for less than 10 Ω between the ground circuit terminal 4 and ground.
   If 10 Ω or greater
   2.1. Vehicle OFF
   2.2. Test for less than 2 Ω in the ground circuit end to end.
   If 2 Ω or greater, repair the open/high resistance in the circuit.
   If less than 2 Ω, repair the open/high resistance in the ground connection.
   If less than 10 Ω
   If less than 10 Ω
3. Vehicle in Service Mode.
4. Verify a test lamp illuminates between the B+ circuit terminal 2 and ground.
   If the test lamp does not illuminate and the circuit fuse is good
   4.1. Vehicle OFF.

4.2. Test for less than 2 Ω in the B+ circuit end to end.
If 2 Ω or greater, repair the open/high resistance in the circuit.
If less than 2 Ω, verify the fuse is not open and there is voltage at the fuse.

If the test lamp does not illuminate and the circuit fuse is open

4.1. Vehicle OFF.
4.2. Test for infinite resistance between the B+ circuit and ground.
If less than infinite resistance, repair the short to ground on the circuit.
If infinite resistance, replace the B67 ultrasonic intrusion sensor.

If the test lamp illuminates

5. Vehicle OFF, disconnect the X6 harness connector at the K9 BCM, vehicle in Service Mode.
6. Test for less than 1 V between the serial data circuit terminal 9 X6 and ground.
   If 1 V or greater
   Repair the short to voltage in the circuit.
   If less than 1 V
7. Test for infinite resistance between the serial data circuit terminal 9 X6 and ground.
   If less than infinite resistance
   Repair the short to ground in the circuit.
   If infinite resistance
8. Test for less than 2 Ω between the serial data circuit terminal 9 at the K9 BCM X6 harness connector and the serial data circuit terminal 3 at the P25 power sounder content theft deterrent alarm module.
   If 2 Ω or greater
   Repair the open/high resistance in the circuit.
   If less than 2 Ω
9. Test or replace the P25 power sounder content theft deterrent alarm module.

Repair Instructions

Perform the Diagnostic Repair Verification after completing the diagnostic procedure.

Control Module References for BCM replacement, programming and setup

&#169© Copyright Chevrolet. All rights reserved

Theft Systems Description and Operation

When armed, the content theft deterrent system is designed to deter vehicle content theft by pulsing the horns and exterior lamps for approximately 30 seconds when an unauthorised vehicle entry is detected. However, the content theft deterrent system does not affect engine starting.

An unauthorised entry can be any of the following with the content theft deterrent system armed:

- Unauthorized entry into the underbonnet area
- Unauthorised entry into the rear compartment
- When any door is opened without using the UNLOCK command from a keyless entry transmitter.
- After a battery reconnect, if the battery was disconnected with the content theft deterrent system armed

The components of the content theft deterrent system are:

- Body Control Module (BCM)
- Keyless entry control module
- Remote control door lock receiver
- Security indicator
- Door ajar switches
- Tailgate ajar switch
- Bonnet ajar switch
- Intrusion sensor (RPO UA2 or UTC)
- Intrusion sensor disable switch (RPO UA2 or UTC)
- Glass breakage sensor (RPO UA2 or UTC)
- Alarm siren (RPO UA2 or UTC)

Arming the Content Theft Deterrent System

Use the following procedure in order to arm the system:

1. Place the gear lever in P (park).
2. Turn OFF the vehicle.
3. Open any door.

Note: The system is not armed if the doors are locked manually; the power door lock switch or remote keyless entry transmitter must be used to arm the content theft deterrent system.

4. Lock the doors with the power door lock switch or by pressing the LOCK button on the transmitter. The system is in standby mode and will not start the arming timer until all doors are closed.
5. The system will begin the arm sequence immediately after the last door is closed. If the keyless entry transmitter is used the arm the system after the vehicle doors are closed, the arm sequence will begin as soon as the LOCK command is received by the transmitter.
6. Pressing the LOCK button on the keyless entry transmitter a second time will bypass the delayed arming function and force the system to arm.

Locking the Vehicle Without Arming the Content Theft Deterrent System

Locking the vehicle may be accomplished without arming the content theft deterrent system. Use of the manual door locks will lock the vehicle, but will not arm the content theft deterrent system.

Disarming an Armed System/Silencing an Alarm

If system arming has been requested by the power door lock switch or the keyless entry transmitter, it must be disarmed.

Note: Disconnecting the battery or removing fuses does not disable the arm or alarm modes, since the BCM stores the content theft deterrent mode status in memory.

- To disarm the content theft deterrent system in standby mode, perform one of the following:
  - Press the UNLOCK button on the keyless entry transmitter.
  - Approach the vehicle with a valid keyless entry transmitter and pull the vehicle door handle (RPO ATH).
  - Press the ignition mode switch with a valid key in the vehicle
- To disarm the content theft deterrent system in the armed mode (non-event) or when activated (during an alarm event):
  - Press the UNLOCK button on the keyless entry transmitter.
  - Press the ignition mode switch with a valid key in the vehicle

Content Theft Deterrent Circuit Description

The following is a description of each component used in the content theft deterrent system:

Body Control Module

The content theft deterrent system is an internal function of the BCM which utilises serial data and various switch inputs information to perform content theft deterrent functions. When the BCM detects an unauthorized entry, it activates the horns and exterior lamps. The BCM has 4 basic modes (disarmed, standby, armed, and alarm) for operating the content theft deterrent system. The different modes are described below.

1. The BCM has the content theft deterrent system in a disarmed mode until the doors locked by either the power door lock switch or the LOCK button on the transmitter.

2. The BCM enters the standby mode when the above conditions are detected. If a door was already opened when the arm mode was requested, the standby mode does not start the timer until the last door is closed.
3. When the last door is closed, a 15 second timer is activated. Once the timer has expired, the BCM enters the armed mode. After this delay, any unauthorised entry will activate the alarm mode.
4. When the BCM detects an unauthorised entry, the BCM enters the alarm mode. The BCM activates the horns and exterior lamps for 30 seconds. This is followed by a three minute time-out with the horn no longer active. If no new intrusions are detected after the time-out, the horn is not active. The system must be disarmed or the intrusion condition removed after the time-out for the system to exit alarm mode.

Keyless Entry Control Module

The passive keyless entry system can arm and disarm the content theft deterrent system. When a valid keyless entry transmitter is detected while attempting to passively access the vehicle, the keyless entry module will send a message via serial data to disarm the content theft deterrent system.

Remote Control Door Lock Receiver

The keyless entry system can arm and disarm the content theft deterrent system. When the remote control door lock receiver receives a door lock or unlock signal from the transmitter, the remote control door lock receiver sends a message to the BCM via serial data to perform the appropriate arm/disarm functions.

Security Indicator

The security LED is illuminated on the upper I/P by the BCM. The content theft deterrent system uses the security LED to inform the driver of system status prior to arming.

Door Ajar Switches

The content theft deterrent system uses the door ajar switches as a status indicator to activate the alarm. The door ajar switches are monitored by the body control module via a discrete input from each door ajar switch. If the BCM receives a signal indicating a door is opened when the content theft deterrent system is armed, the BCM activates the alarm.

Bonnet Ajar Switch

The content theft deterrent system uses the bonnet ajar switch as a status indicator to activate the alarm. The BCM monitors the bonnet ajar switch via a discrete input from the switch. If the BCM receives a signal indicating the bonnet has been opened when the content theft deterrent system is armed, the BCM activates the alarm.

Tailgate Ajar Switch

The content theft deterrent system uses the tailgate ajar switch as a status indicator to activate the alarm. The BCM monitors the tailgate ajar switch via a discrete input from the switch. If the BCM receives a signal indicating the tailgate has been opened when content theft deterrent system is armed, the BCM activates the alarm.

Intrusion Sensor (RPO UTT)

The intrusion sensor is located in the overhead console and uses two ultrasonic sensors to detect any motion inside the vehicle. If motion is detected inside the vehicle while the content theft deterrent system is armed, the system will transition to the alarm mode. The intrusion sensor also acts as an inclination sensor. The inclination sensor determines the vehicles level when the content theft deterrent system is armed. If the vehicle level is changed while the system is armed, such as being lifted by a tow truck or raised with a jack, the alarm will be activated. The intrusion sensor can be disabled using the intrusion sensor disable switch. The intrusion sensor disable switch also shows the intrusion sensor status using a status LED.

Alarm Siren (RPO UTT)

The content theft deterrent system uses the alarm siren as an audible alert device to alert individuals near the vehicle that a vehicle intrusion is occurring. The siren is supplied power and ground for operation and communicates with the body control module (BCM) via a dedicated LAN circuit.

Inputs

The BCM monitors the following inputs for content theft deterrent:

- Door ajar switches
- Keyless entry transmitter LOCK/UNLOCK buttons; a message from the remote control door lock receiver
- Immobiliser status--The BCM uses the immobiliser status for disarming the system or silencing an alarm when the correct vehicle key is used to start the vehicle
- Tailgate ajar switch
- Bonnet ajar switch
- Intrusion sensor (RPO UTT)

Outputs

The BCM controls the following for content theft deterrent:

- Horn relay
- Exterior lamps
- Alarm siren (RPO UTT)

&#169© Copyright Chevrolet. All rights reserved

Driver or Passenger Seat Replacement

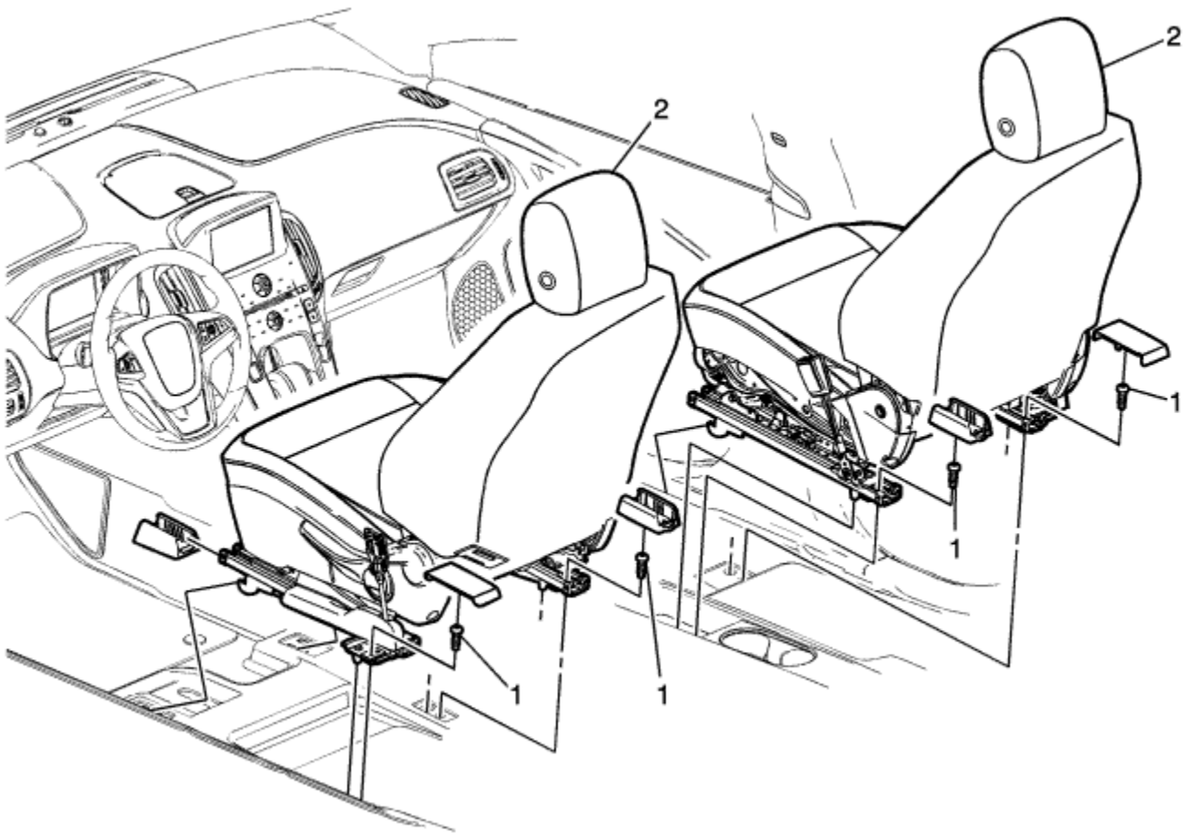

Callout	Component Name

Warning: Refer to SIR Warning in the Preface section.

Preliminary Procedures

1. Disable the SIR system. Refer to SIR Disabling and Enabling .

2. Disconnect the front seat belt tensioner fastener by removing the cap, bolt, and cover. Refer to Driver or Passenger Seat Retractor Side Belt Replacement .

1	Front Seat Bolt (Qty: 4) **Caution:** Refer to Fastener Caution in the Preface section. **Procedure** 1. Adjust the seat to the full forward position to gain access to the rear bolts. 2. Remove the foot cover by pulling up on the rear of the cover and then pushing forward to gain access to the rear outboard bolts. 3. Re-cut the threads of the body. Refer to Thread Inserts . 4. Bolts are microencapsulated. Install NEW front seat bolts. DO NOT reuse the old bolts. **Tighten** 45 N·m (33 lb ft)
2	Front Seat Assembly (Qty: 2) **Procedure** 1. Disconnect the electrical. 2. With the aid of an assistant remove the front seat, by tilting the seat forward and then lifting and pulling the seat rearwards to disengage the front hooks. 3. Transfer components as necessary.

© Copyright Chevrolet. All rights reserved

Driver or Passenger Seat Cushion Outer Finish Panel Replacement

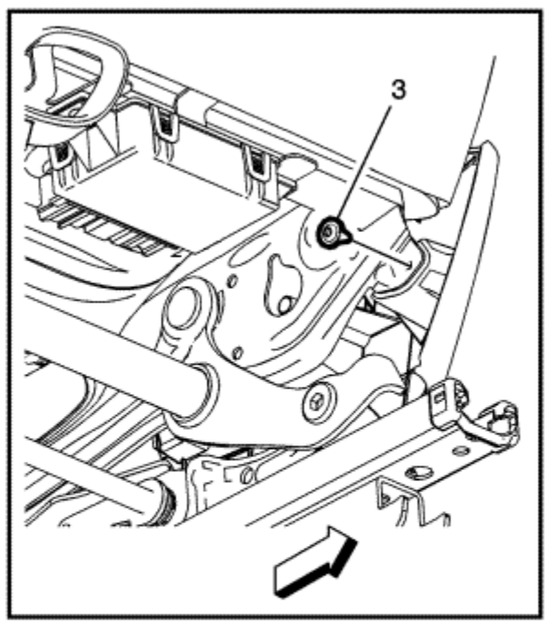

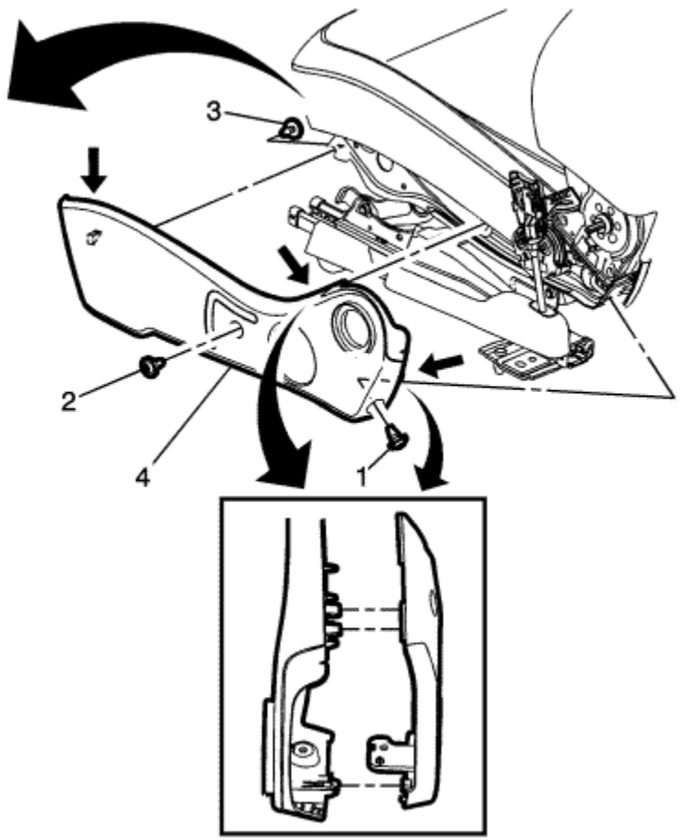

Callout	Component Name

Preliminary Procedure

1. Remove the seat belt from the seat belt anchor. Refer to Driver or Passenger Seat Retractor Side Belt Replacement .
2. Remove the driver or passenger seat adjuster vertical actuator handle. Refer to Driver or Passenger Seat Adjuster Vertical Actuator Handle Replacement .
3. Remove the driver or passenger seat recliner handle. Refer to Driver or Passenger Seat Recliner Handle Replacement .

1	Driver or Passenger Seat Outer Adjuster Finish Cover Rear Fastener **Procedure** 1. Make sure the seat is in the full up position. 2. After removal of the fastener, using a flat bladed tool, pry upward on the tab connecting the inner and outer panels..
2	Driver or Passenger Seat Outer Adjuster Finish Cover Side Fastener **Procedure** After removal of the fastener, using a flat bladed tool, pry upward on the two tabs connectng the inner and outer panels.
3	Driver or Passenger Seat Outer Adjuster Finish Cover Front Fastener
4	Driver or Passenger Seat Outer Adjuster Finish Cover **Procedure** 1. Push downward on the front hidden clip to release the panel from the frame. 2. Pull upward on the finish trim top edge to release the panel ribs from the frame. 3. Disconnect any electrical connector, if equipped. 4. If replacing the cover, transfer components as necessary.

© Copyright Chevrolet. All rights reserved

Driver or Passenger Seat Wiring Harness Replacement - Seat Back

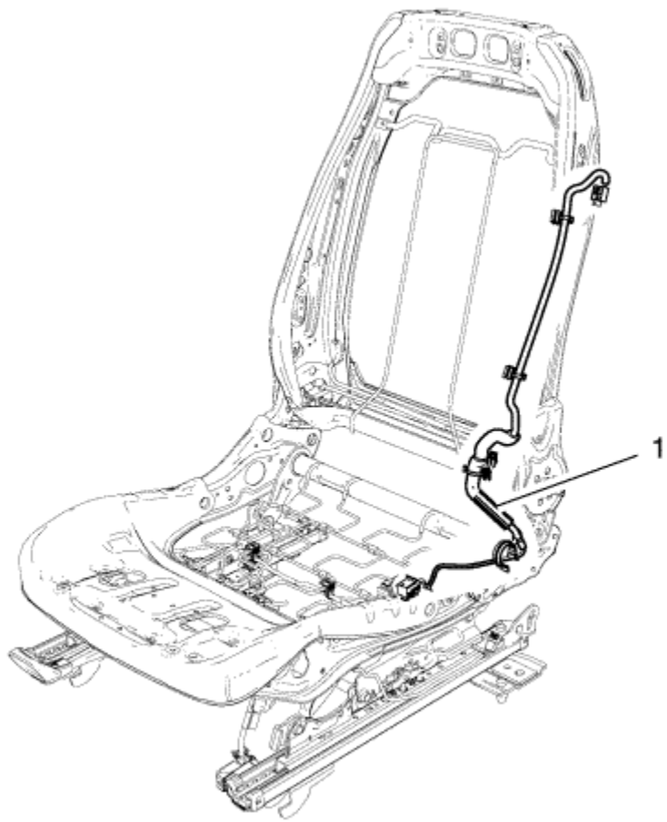

Callout	Component Name
Preliminary Procedures 1. Remove the front seat cushion cover and pad. Refer to Front Seat Cushion Cover and Pad Replacement . 2. Remove the front seat back cushion cover and pad. Refer to Driver or Passenger Seat Back Cushion Cover and Pad Replacement .	

1	Driver or Passenger Seat Wiring Harness **Procedure** 1. Remove the wiring harness from front seat back frame. 2. Note location and routing of the wiring harness prior to ensure proper reinstallation.

© Copyright Chevrolet. All rights reserved

Driver or Passenger Seat Wiring Harness Replacement - Cushion

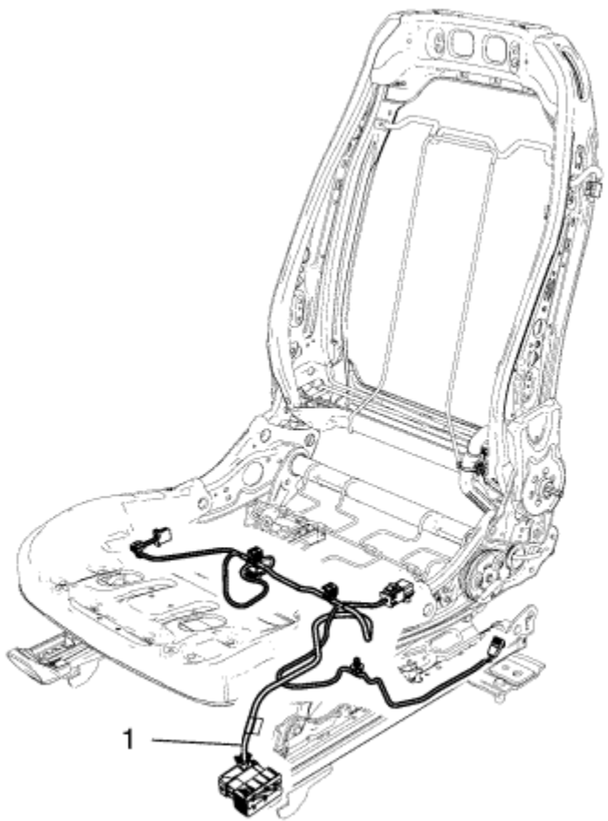

Callout	Component Name
Preliminary Procedures 1. Remove the front seat cushion cover and pad. Refer to Front Seat Cushion Cover and Pad Replacement . 2. Remove the front seat back cushion cover and pad. Refer to Driver or Passenger Seat Back Cushion Cover and Pad Replacement .	

1	Driver or Passenger Seat Wiring Harness **Procedure** 1. Remove the wiring harness from front seat frame. 2. Note location and routing of the wiring harness prior to ensure proper reinstallation.

© Copyright Chevrolet. All rights reserved

Driver or Passenger Seat Adjuster Vertical Actuator Handle Replacement

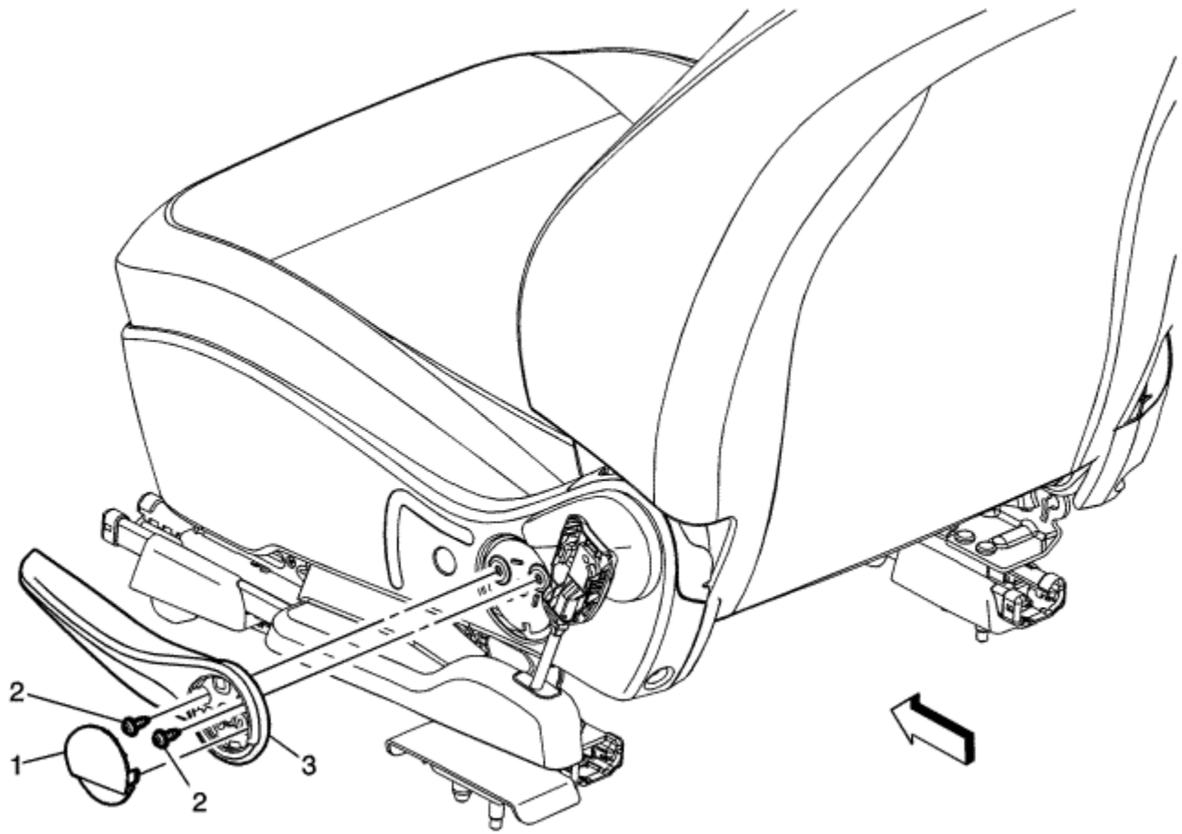

Callout	Component Name
1	Driver or Passenger Seat Adjuster Vertical Actuator Handle Cover **Procedure** Use a flat-bladed tool to push inward on the three tabs to release the handle cover from the handle assembly.

2	Driver or Passenger Seat Adjuster Vertical Actuator Handle Fastener (Qty: 2) **Caution:** Refer to Fastener Caution in the Preface section.
3	Driver or Passenger Seat Adjuster Vertical Actuator Handle **Procedure** Use a flat-bladed tool to release the adjuster handle from the seat frame assembly.

© Copyright Chevrolet. All rights reserved

Driver or Passenger Seat Adjuster Handle Replacement

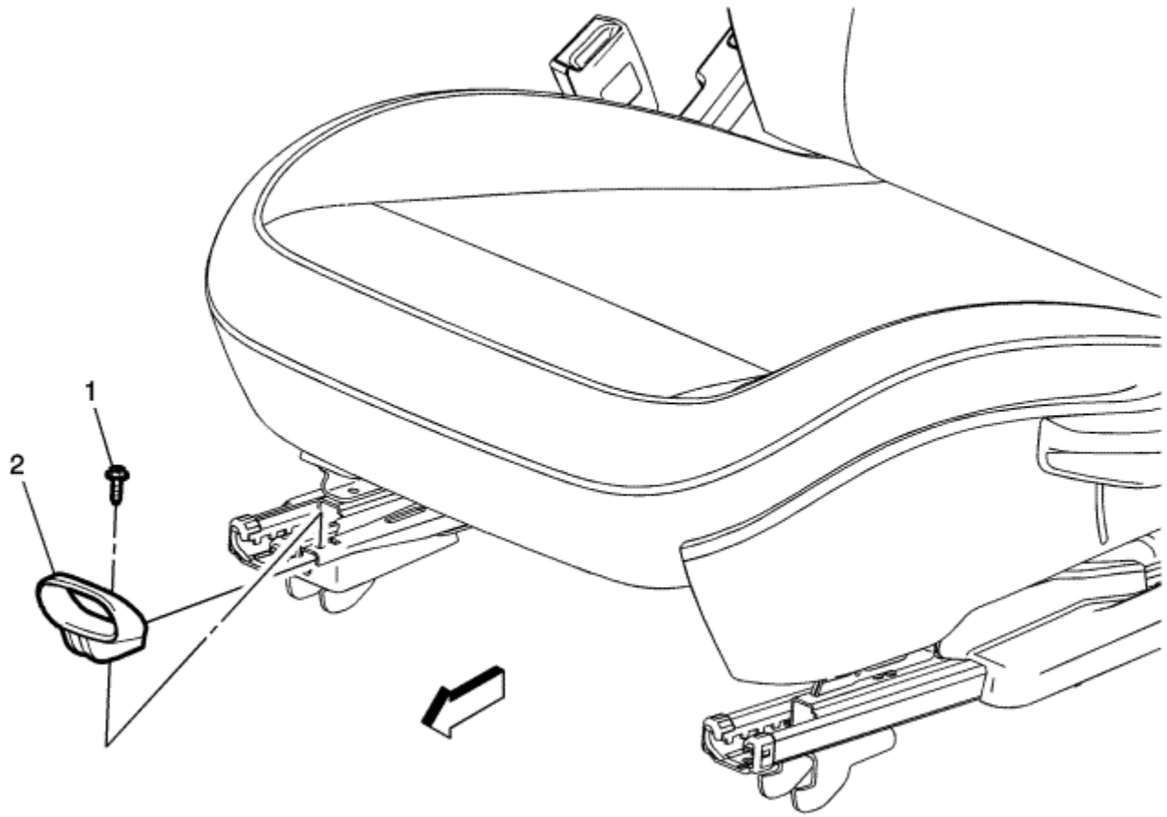

Callout	Component Name
1	Driver or Passenger Seat Adjuster Handle Fastener **Caution:** Refer to Fastener Caution in the Preface section.
2	Driver or Passenger Seat Adjuster Handle

© Copyright Chevrolet. All rights reserved

Front Seat Adjuster Track Finish Cover Replacement

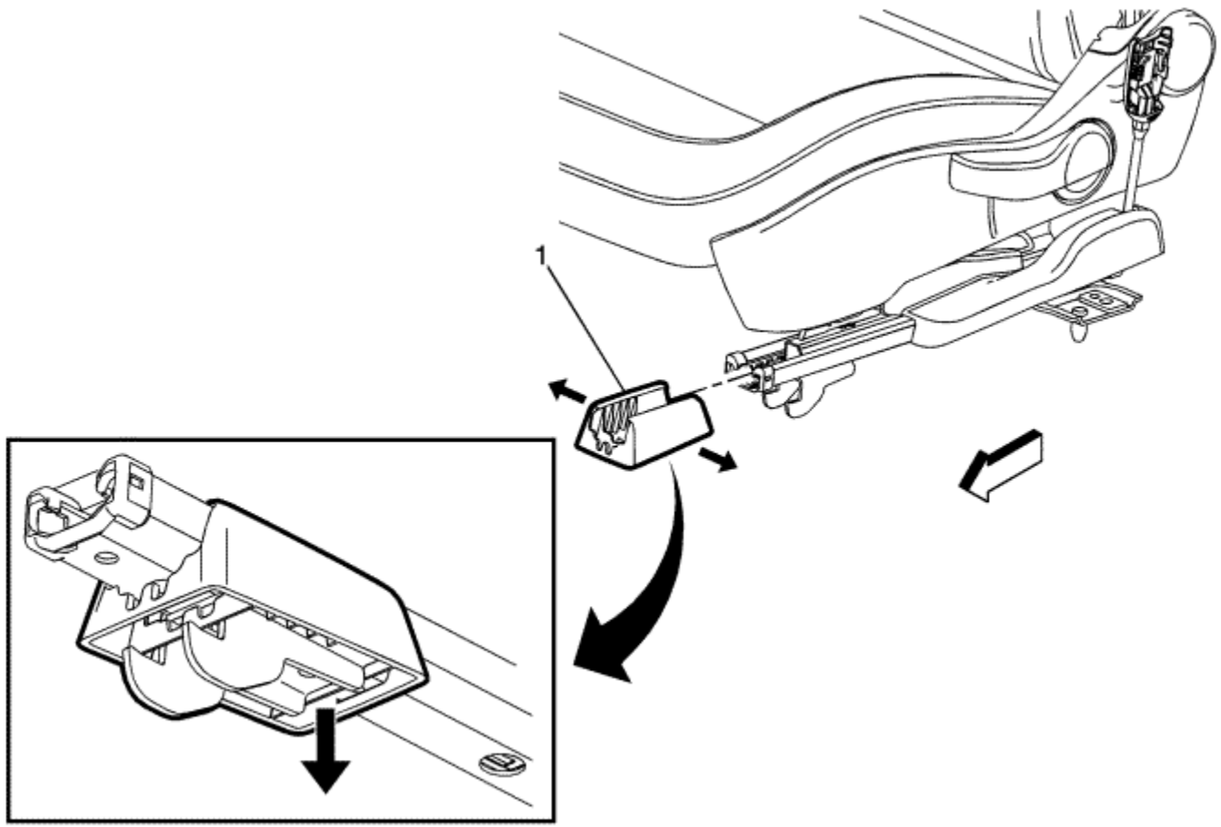

Callout	Component Name
Preliminary Procedure Remove the driver or passenger seat. Refer to Driver or Passenger Seat Replacement	
	Front Seat Adjuster Track Finish Cover

	Caution: Do not twist the cover during removal. Twisting the cover may cause the component to break.
1	**Procedure** 1. Firmly grasp both sides of the finish cover pulling the sides outward to disengage the top of the cover off of the track. 2. Pull down on the finish cover and disengage it from the front seat hooks and track.

© Copyright Chevrolet. All rights reserved

Driver or Passenger Seat Head Restraint Replacement

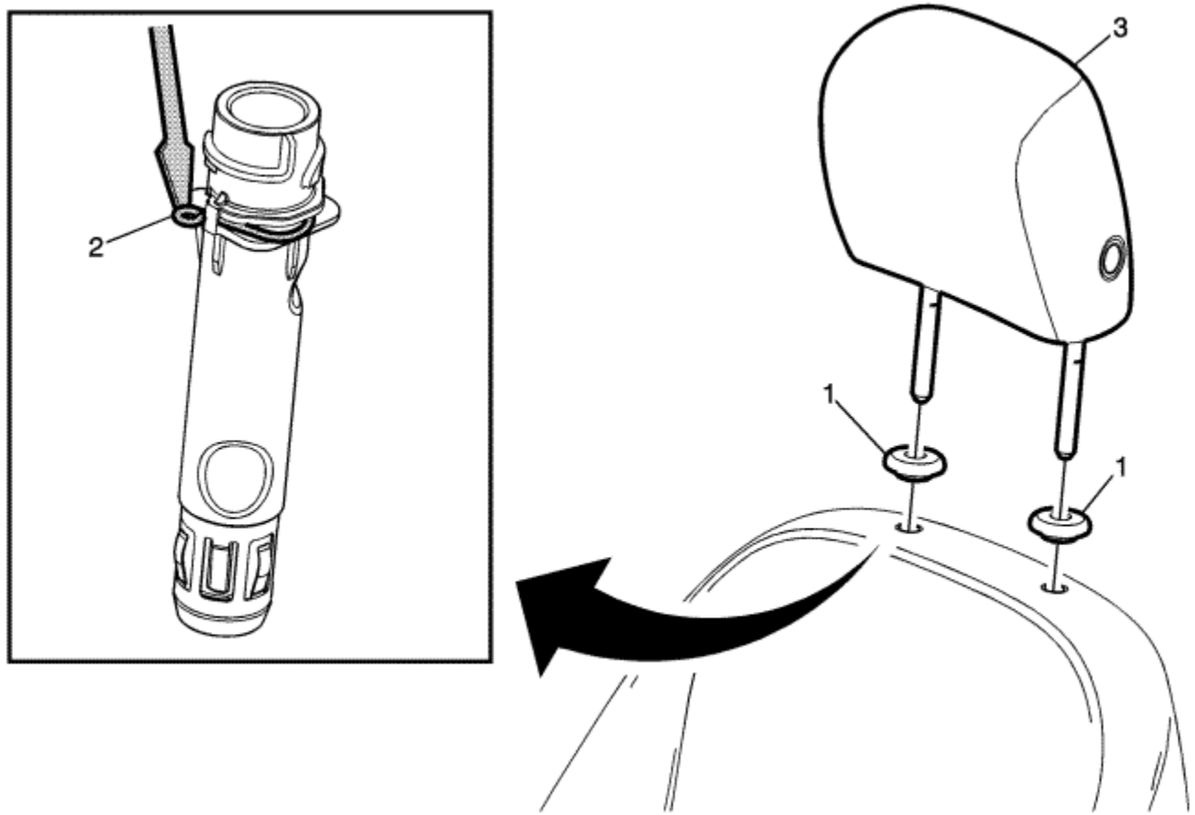

Callout	Component Name
1	Driver or Passenger Seat Head Restraint Bezel (Qty: 2) **Procedure** 1. Raise the headrest to gain access to the head restraint bezel.

	2. Twist the bezel counter clockwise and push the bezel upward on the head restraint adjuster rod.
2	Driver or Passenger Seat Head Restraint Clip (Qty: 2) **Procedure** Using a suitable pointed or flat bladed tool, push the metal clip rearward while pulling upward on the head restraint.
3	Driver or Passenger Seat Head Restraint

© Copyright Chevrolet. All rights reserved

Front Seat Head Restraint Adjust Rod Guide Replacement

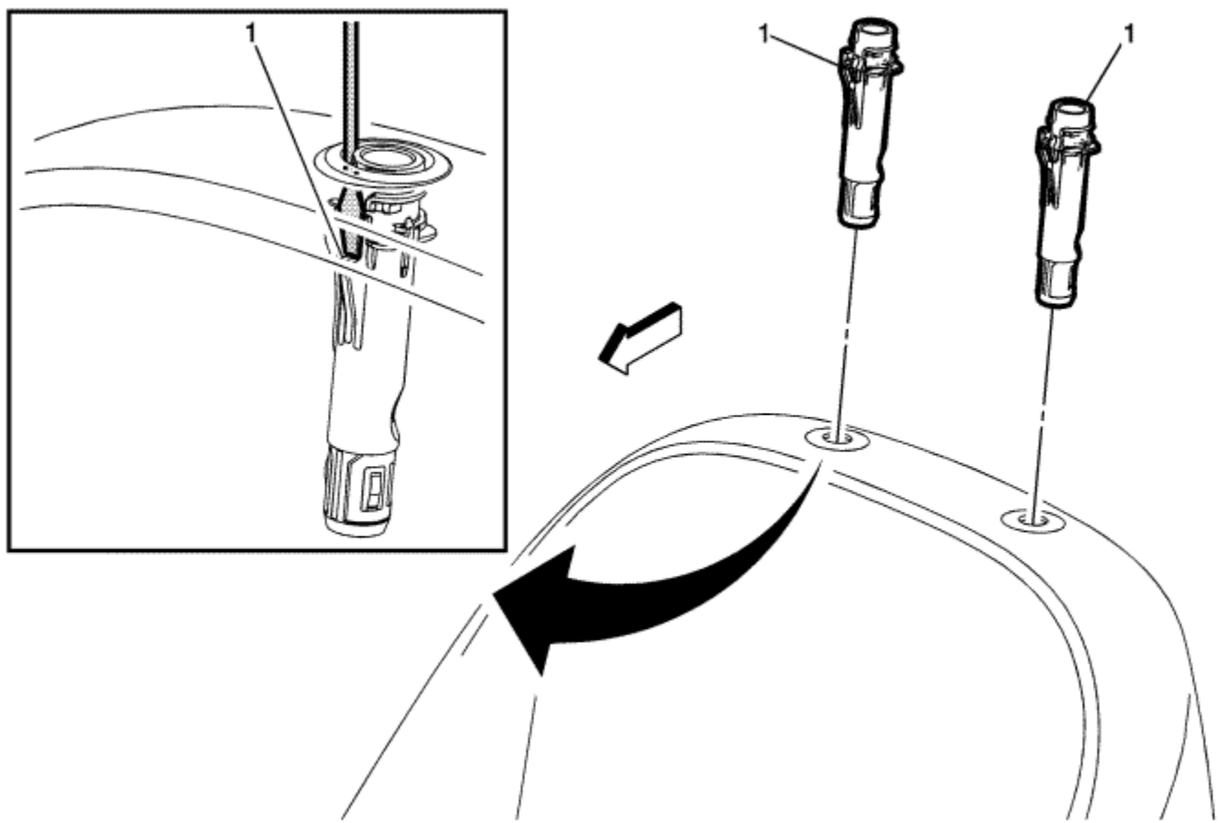

Callout	Component Name
Preliminary Procedure Remove the driver or passenger seat head restraint. Refer to Driver or Passenger Seat Head Restraint Replacement .	
	Front Seat Head Restraint Adjuster Rod Guide

1	**Procedure** Using a suitable flat-bladed tool, slide the tool on the outside of the guide until it finds the slot. Then push the plastic slot inward and pull upward to remove the guide from the seat back frame.

© Copyright Chevrolet. All rights reserved

Front Seat Head Restraint Adjust Knob Replacement

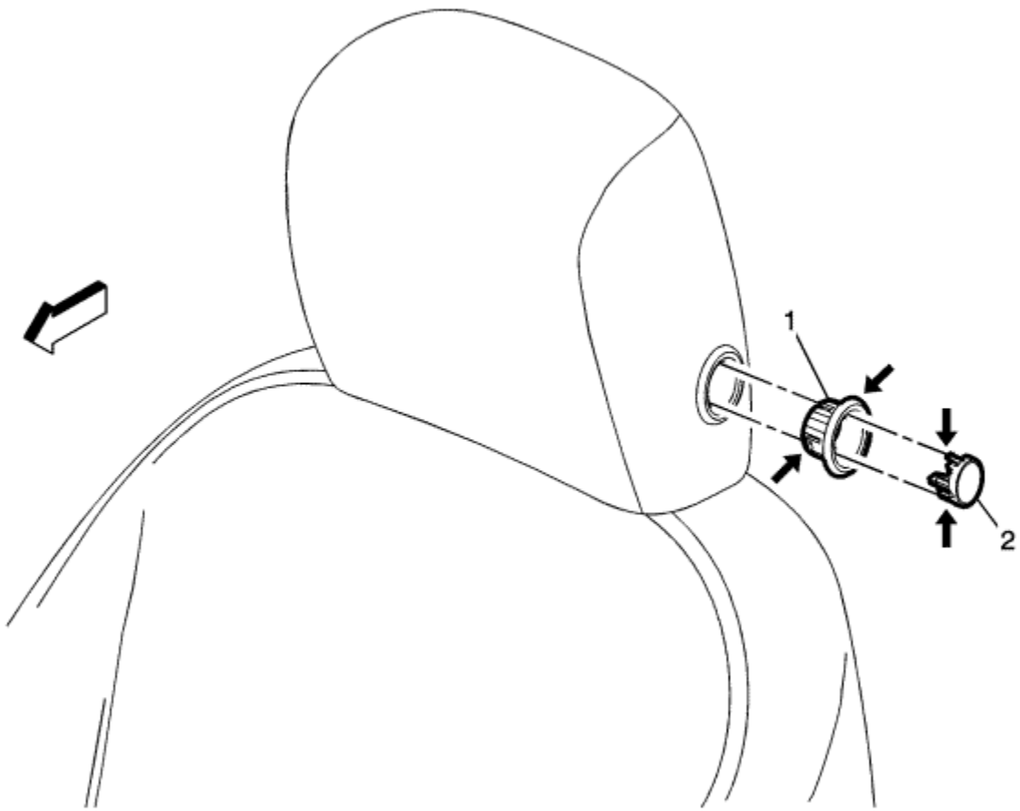

Callout	Component Name
1	Front Seat Head Restraint Adjuster Knob Bezel **Procedure** Use a flat-bladed tool to push inward on the adjuster bezel tabs to release the bezel from the front seat head restraint.

	Front Seat Head Restraint Adjuster Knob Replacement
2	**Procedure** Use a flat-bladed tool to push inward on the adjuster knob tabs to release it from the bezel.

© Copyright Chevrolet. All rights reserved

Driver or Passenger Seat Cushion Closeout Cover Replacement

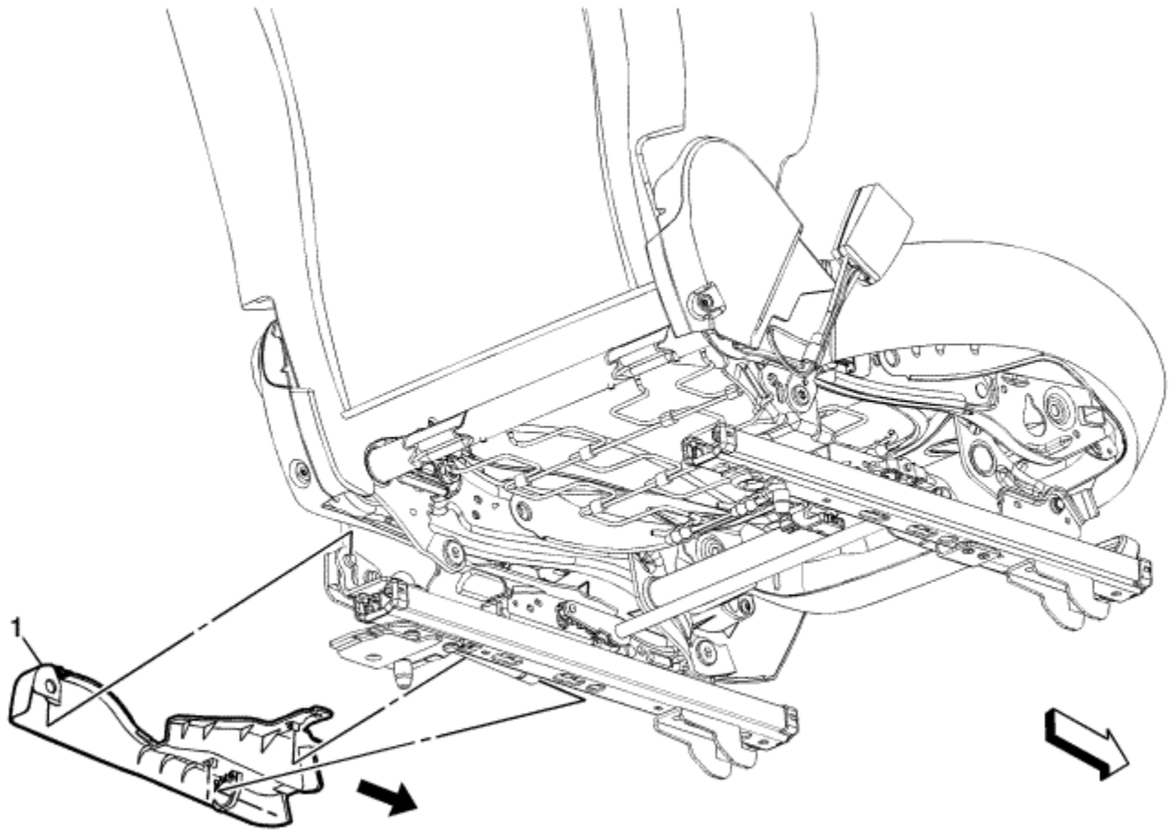

Callout	Component Name
	Driver or Passenger Seat Cushion Closeout Cover **Procedure**
1	1. Raise the seat to the highest seat position.

	2. Unclip the seat tensioner wiring harness from the finish cover. 3. Release the rear tab of the finish cover. 4. Release the middle tabs of the finish cover by gently pulling up on the finish cover. 5. Slide the finish cover forward off the tensioner rod.

© Copyright Chevrolet. All rights reserved

Driver or Passenger Seat Outer Recliner Finish Cover Replacement

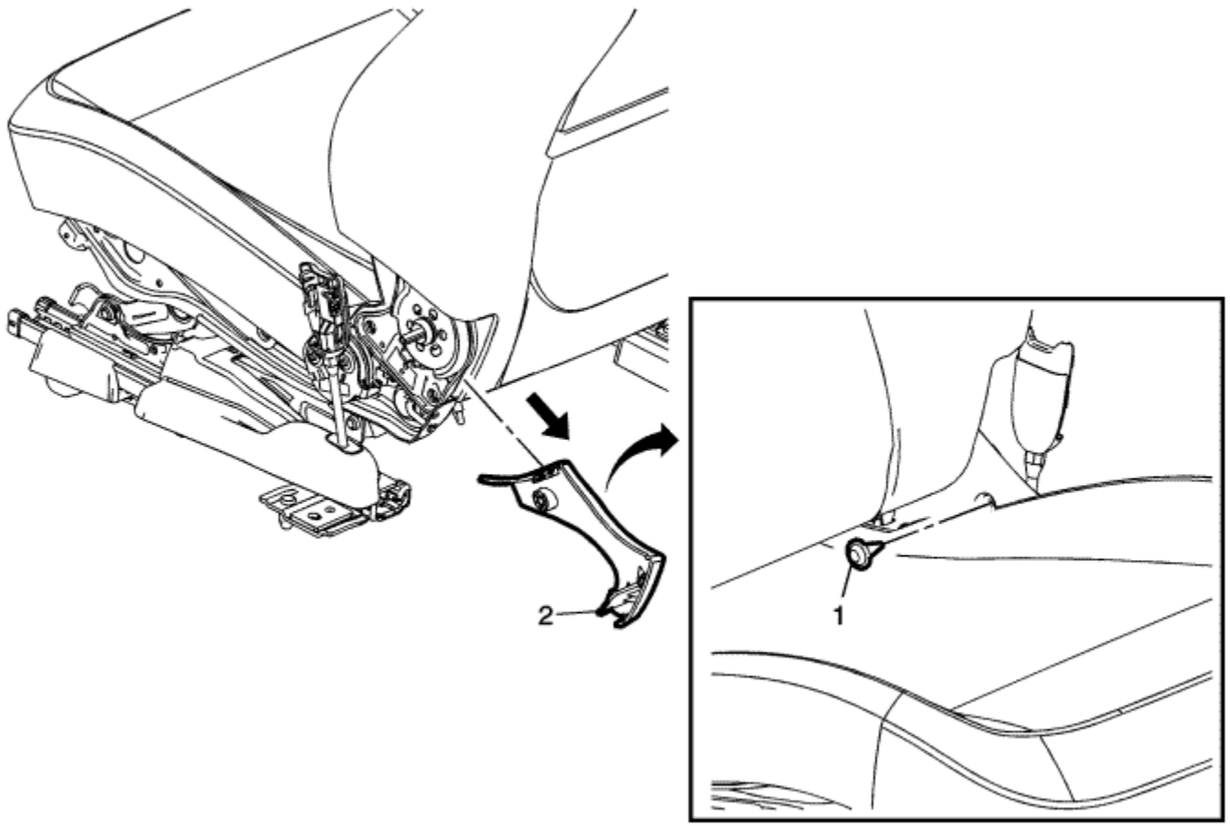

Callout	Component Name
Preliminary Procedure	
1. Remove the driver or passenger seat. Refer to Driver or Passenger Seat Replacement . 2. Remove the driver or passenger seat cushion outer finish panel. Refer to Driver or Passenger Seat Cushion Outer Finish Panel Replacement .	

1	Driver or Passenger Seat Outer Recliner Finish Cover Fastener **Caution:** Refer to Fastener Caution in the Preface section.
2	Driver or Passenger Seat Outer Recliner Finish Cover **Procedure** Firmly grasp the upper portion of the finish cover that folds over the seat cushion frame, this area needs to be flexed inward while sliding the finish cover rearward.

© Copyright Chevrolet. All rights reserved

Driver or Passenger Seat Inner Recliner Finish Cover Replacement

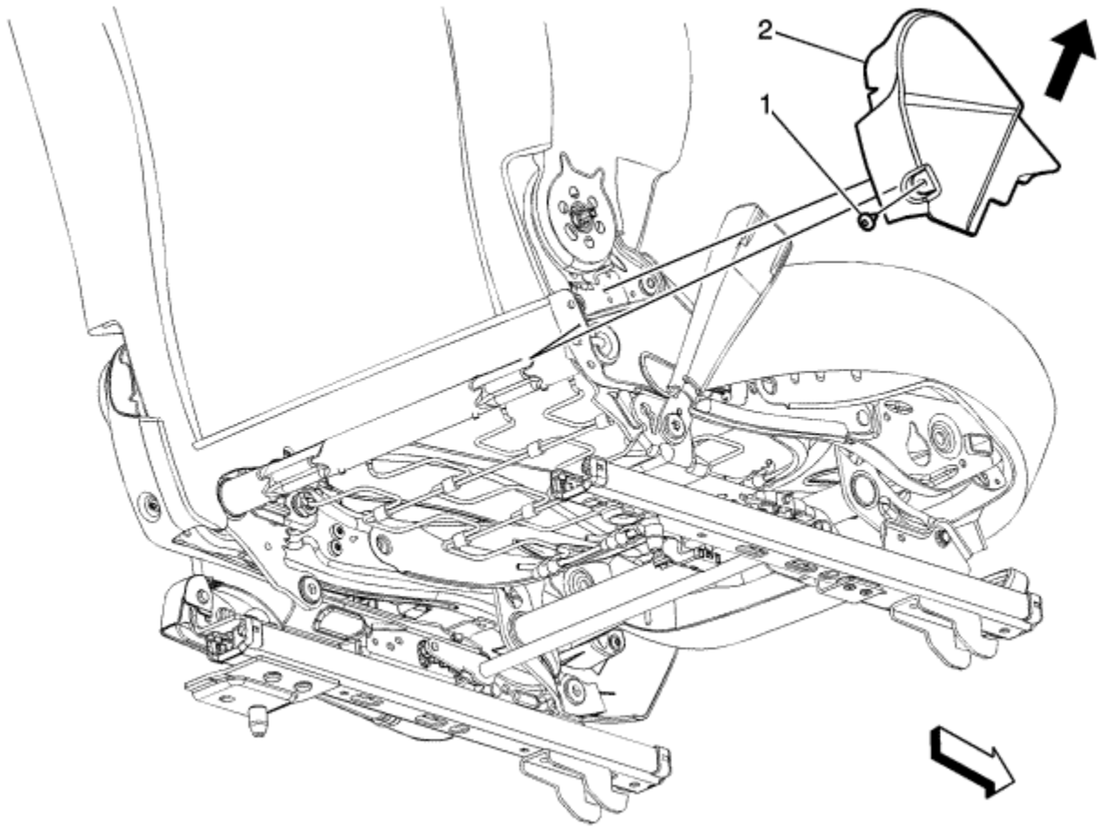

Callout	Component Name
1	Driver or Passenger Seat Inner Recliner Finish Cover Fastener
2	Driver or Passenger Seat Inner Recliner Finish Cover **Caution:** Refer to Fastener Caution in the Preface section.

	Procedure Firmly grasp the upper area of the finish cover that folds over the seat cushion frame, pull upward and then outboard to disengage the finish cover from the seat cushion frame.

© Copyright Chevrolet. All rights reserved

Driver or Passenger Seat Cushion Frame Replacement

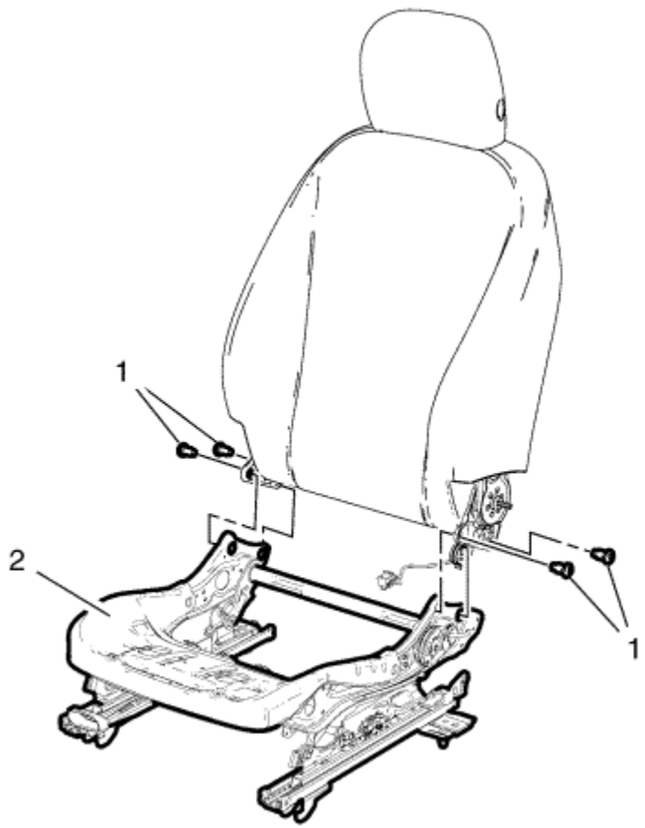

Callout	Component Name

Warning: Refer to SIR Warning in the Preface section.

Preliminary Procedures

1. Remove the front seat. Refer to Driver or Passenger Seat Replacement .

2. Remove the front seat belt tensioner. Refer to Front Seat Belt Anchor Plate Tensioner Replacement .
3. Remove the front seat belt buckle. Refer to Front Seat Belt Buckle Replacement .
4. Remove the front seat cushion and pad. Refer to Front Seat Cushion Cover and Pad Replacement .
5. Remove the front seat outer recliner finish cover. Refer to Driver or Passenger Seat Outer Recliner Finish Cover Replacement .
6. Remove the front seat cushion wiring harness. Refer to Driver or Passenger Seat Wiring Harness Replacement - Cushion .

1	Driver or Passenger Seat Back Cushion Frame Bolt (Qty: 4) **Caution:** Refer to Fastener Caution in the Preface section. **Tighten** 35 N·m (26 lb ft)
2	Driver or Passenger Seat Cushion Frame **Procedure** If replacing with a new front seat cushion frame, transfer components as necessary.

© Copyright Chevrolet. All rights reserved

Front Seat Cushion Cover and Pad Replacement

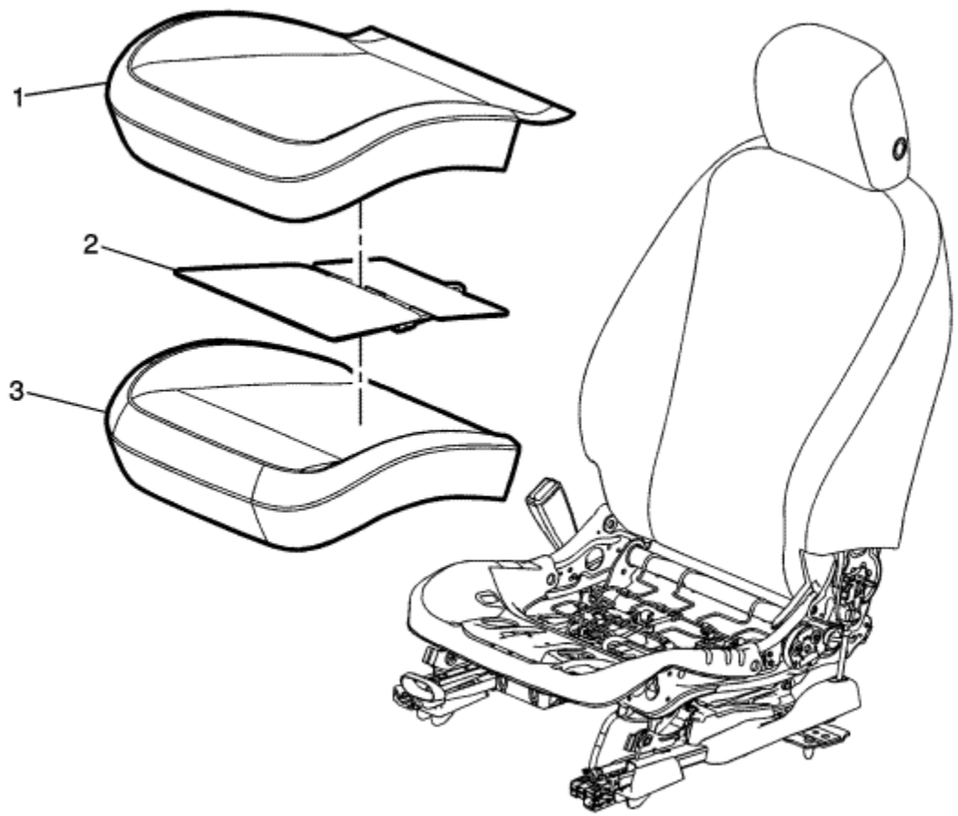

Callout	Component Name

Warning: Refer to SIR Warning in the Preface section.

Preliminary Procedures

1. Remove the driver or passenger seat. Refer to Driver or Passenger Seat Replacement .

2. Remove the driver or passenger seat cushion outer finish panel. Refer to Driver or Passenger Seat Cushion Outer Finish Panel Replacement .
3. Remove the driver or passenger seat inner recliner finish cover. Refer to Driver or Passenger Seat Inner Recliner Finish Cover Replacement .

1	Front Seat Cushion Cover **Procedure** 1. Disengage the J-channel retainers from the seat cushion frame. 2. Disconnect the electrical connectors that attach to the seat cushion, if equipped. 3. Remove the seat cushion cover and pad from the seat cushion frame as an assembly. 4. Separate the seat cushion from the seat cushion pad by pulling the cover away from the pad.
2	Front Seat Cushion Heater, if equipped **Procedure** Remove the driver or passenger seat cushion heater. Refer to Driver Seat Cushion Heater Replacement or Passenger Seat Cushion Heater Replacement .
3	Front Seat Cushion Pad

© Copyright Chevrolet. All rights reserved

Driver or Passenger Seat Cushion Pad Wire Replacement

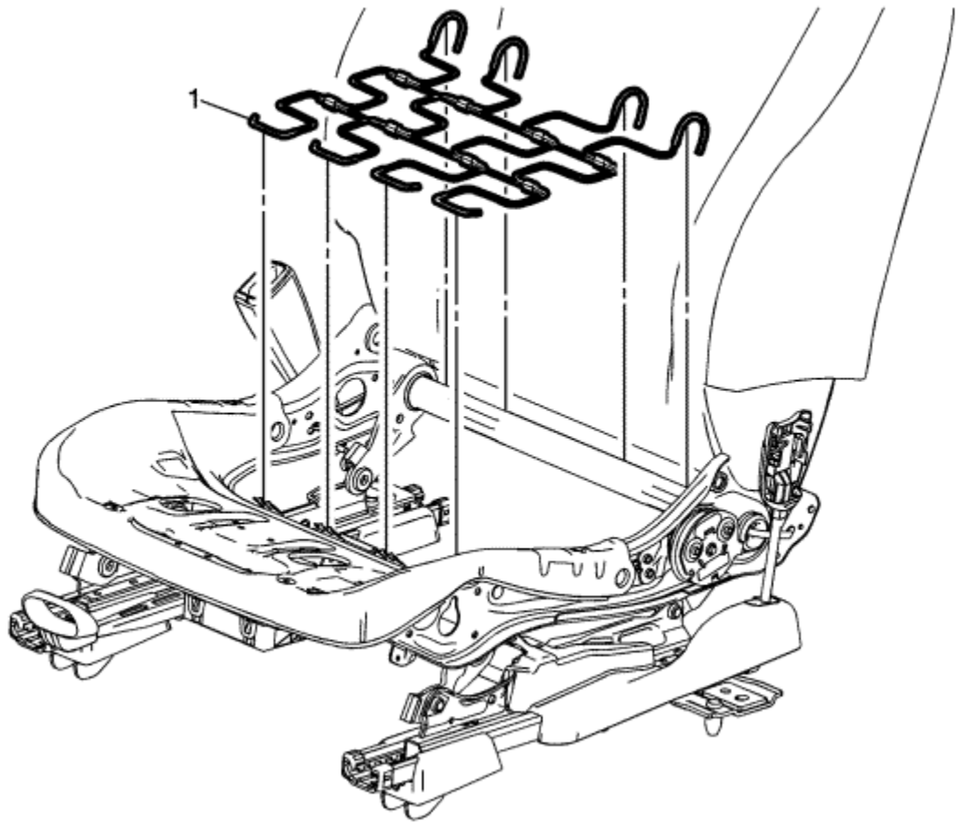

Callout	Component Name

Warning: Refer to SIR Warning in the Preface section.

Preliminary Procedure

1. Remove the front seat cushion cover and pad. Refer to Front Seat Cushion Cover and Pad Replacement .

2. Remove the driver or passenger seat outer recliner finish cover. Refer to Driver or Passenger Seat Outer Recliner Finish Cover Replacement .

1	Driver or Passenger Seat Cushion Pad Wire **Procedure** Disconnect electrical connectors.

© Copyright Chevrolet. All rights reserved

Driver or Passenger Seat Back Cushion Cover and Pad Replacement

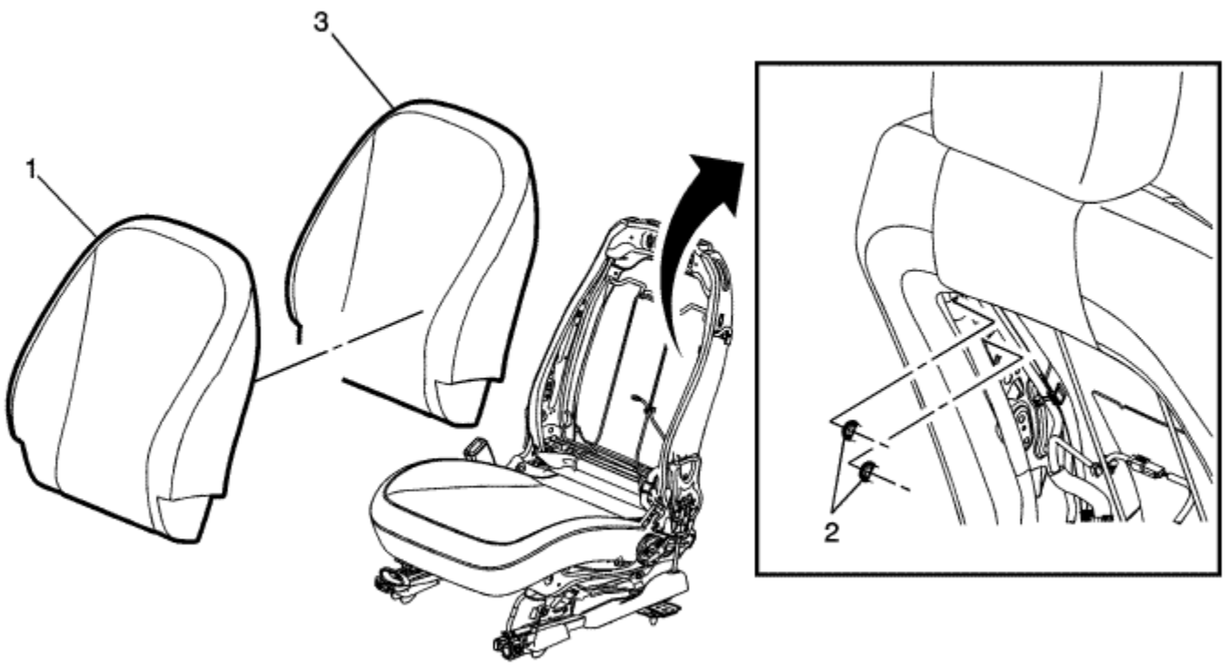

Callout	Component Name
Warning: Refer to SIR Warning in the Preface section. **Warning:** Do not repair or replace the seat stitching or seams in the seat back trim cover with an internal mounted seat side airbag module. Replace the complete seat back trim cover from the OEM. Non-OEM seat stitching may cause improper airbag deployment which could result in personal injury.	

Preliminary Procedure

1. Remove the driver or passenger seat. Refer to Driver or Passenger Seat Replacement .
2. Remove the driver or passenger seat back cushion finish panel. Refer to Driver or Passenger Seat Back Cushion Finish Panel Replacement .
3. Remove the driver or passenger seat cushion outer finish panel. Refer to Driver or Passenger Seat Cushion Outer Finish Panel Replacement .
4. Remove the driver or passenger seat outer recliner finish cover. Refer to Driver or Passenger Seat Outer Recliner Finish Cover Replacement .
5. Remove the front seat head restraint. Refer to Driver or Passenger Seat Head Restraint Replacement .

1	Seat Back Cushion Cover **Procedure** 1. Disengage the J-channel retainers and tabs at the bottom of the seat back cover from the seat back cushion frame. 2. Disconnect the electrical connector that is attached to the seat back cushion, if equipped. 3. Remove the inflatable restraint side impact module nuts (2) from the seat back frame. 4. Remove the connector position assurance (CPA) from the SIR module electrical connector. 5. Disconnect the SIR electrical connector. 6. Remove the seat back cushion cover, airbag module and pad from the seat cushion frame as an assembly.
2	Driver or Passenger Seat Side Inflatable Restraint Module Nut (Qty: 2) **Caution:** Refer to Fastener Caution in the Preface section. **Tighten** 5.5 N·m (49 lb in)
3	Front Seat Back Cushion Pad **Procedure** 1. Slide the inflatable restraint side impact module out of the chute. Refer to Driver or Passenger Seat Side Inflatable Restraint Module Replacement 2. Separate the seat cushion from the seat cushion pad by pulling the cover away from the pad. 3. Transfer the seat heater, if equipped. **Tip** Seat back cover can be damaged upon reinstalling cover to seat back pad. When reinstalling the seat cushion cover to the seat pad, start in upper outboard corner and install outboard side of the cover. Then start at the upper inboard corner and install inboard side of cover.

© Copyright Chevrolet. All rights reserved

Driver or Passenger Seat Back Cushion Pad Wire Replacement

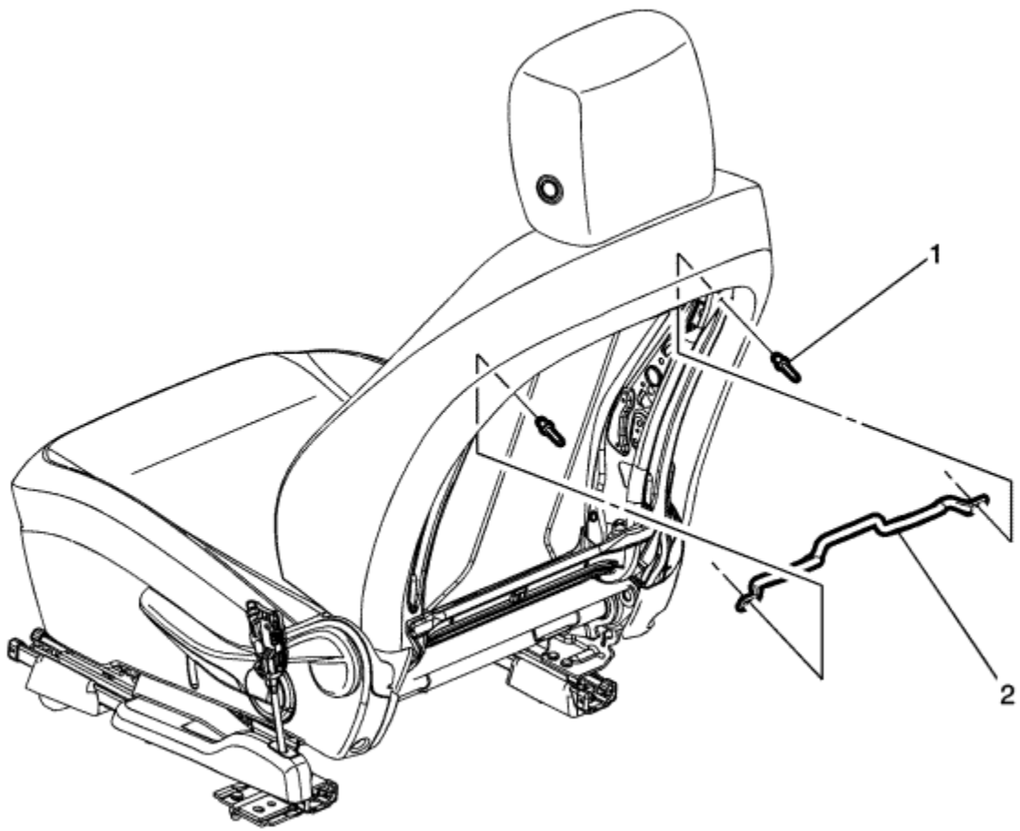

Callout	Component Name
Preliminary Procedure Remove the driver or passenger seat back cushion finish cover. Refer to Driver or Passenger Seat Back Cushion Finish Panel Replacement	
	Driver or Passenger Seat Back Cushion Pad Wire Rivet (Qty: 2)

1	**Warning:** Use the proper eye protection when drilling to prevent metal chips from causing physical injury. **Procedure** 1. Unhook seat back cushion cover J-hooks. 2. Disengage the seat back lumbar wire from the cushion wire. 3. Drill out all of the guide rivets before removing the pad wire.
2	Driver or Passenger Seat Back Cushion Pad Wire **Procedure** When re-installing the cushion pad wire, re-rivet at the same location on the cushion frame with new rivets.

© Copyright Chevrolet. All rights reserved

Driver or Passenger Seat Back Cushion Frame Replacement

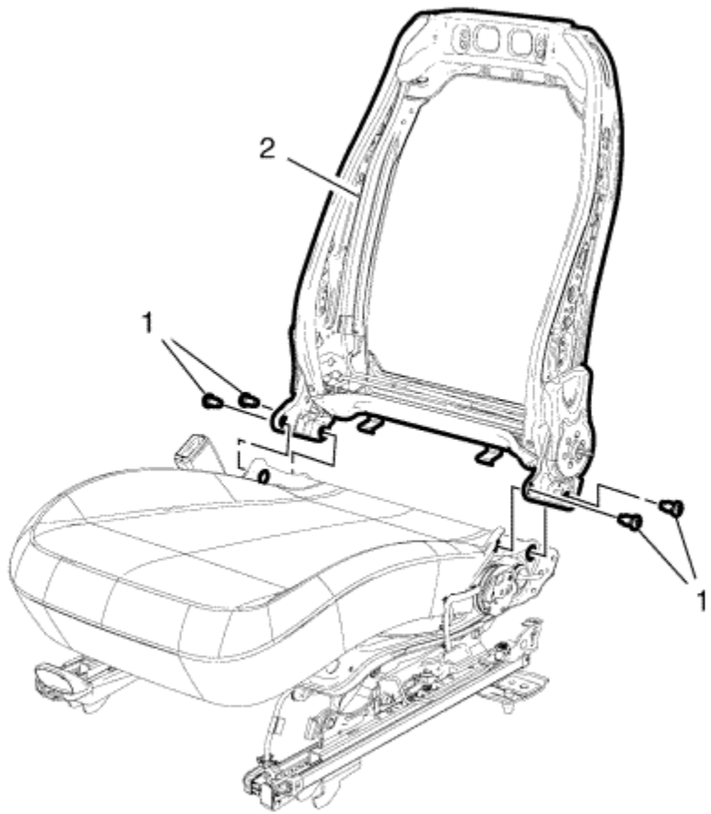

Callout	Component Name

Warning: Refer to SIR Warning in the Preface section.

Preliminary Procedures

1. Remove the front seat. Refer to Driver or Passenger Seat Replacement .

2. Remove the front seat back cushion cover and pad. Refer to Driver or Passenger Seat Back Cushion Cover and Pad Replacement .
3. Remove the front seat head restraint adjust rod guide. Refer to Front Seat Head Restraint Adjust Rod Guide Replacement .
4. Remove the front seat back cushion wiring harness. Refer to Driver or Passenger Seat Wiring Harness Replacement - Cushion .

1	Driver or Passenger Seat Back Cushion Frame Bolt (Qty: 4) **Caution:** Refer to Fastener Caution in the Preface section. **Tighten** 35 N·m(26 lb ft)
2	Driver or Passenger Seat Back Cushion Frame **Procedure** If replacing with a new front seat back cushion frame, transfer components as necessary.

© Copyright Chevrolet. All rights reserved

Driver or Passenger Seat Recliner Handle Replacement

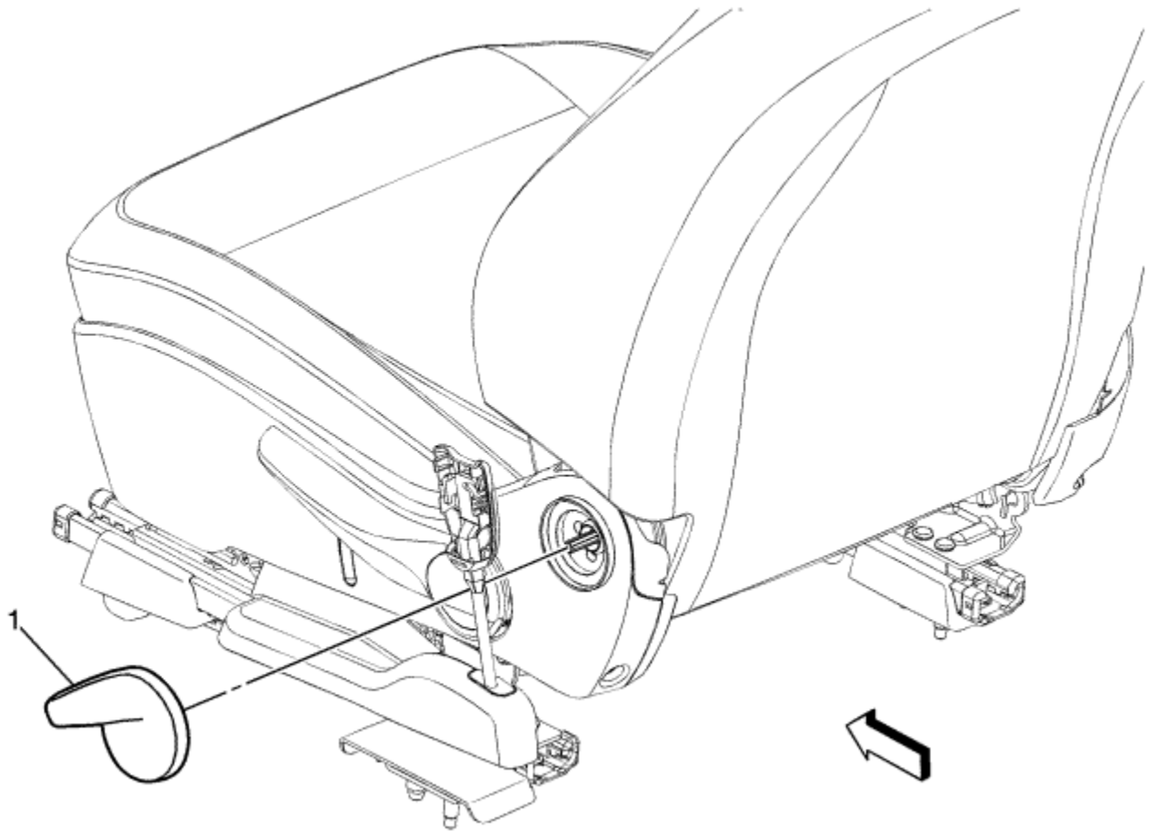

Callout	Component Name
1	Driver or Passenger Recliner Handle **Procedure** Use a flat-bladed tool to remove the recliner handle from the torsion bar.

© Copyright Chevrolet. All rights reserved

Driver or Passenger Seat Back Cushion Finish Panel Replacement

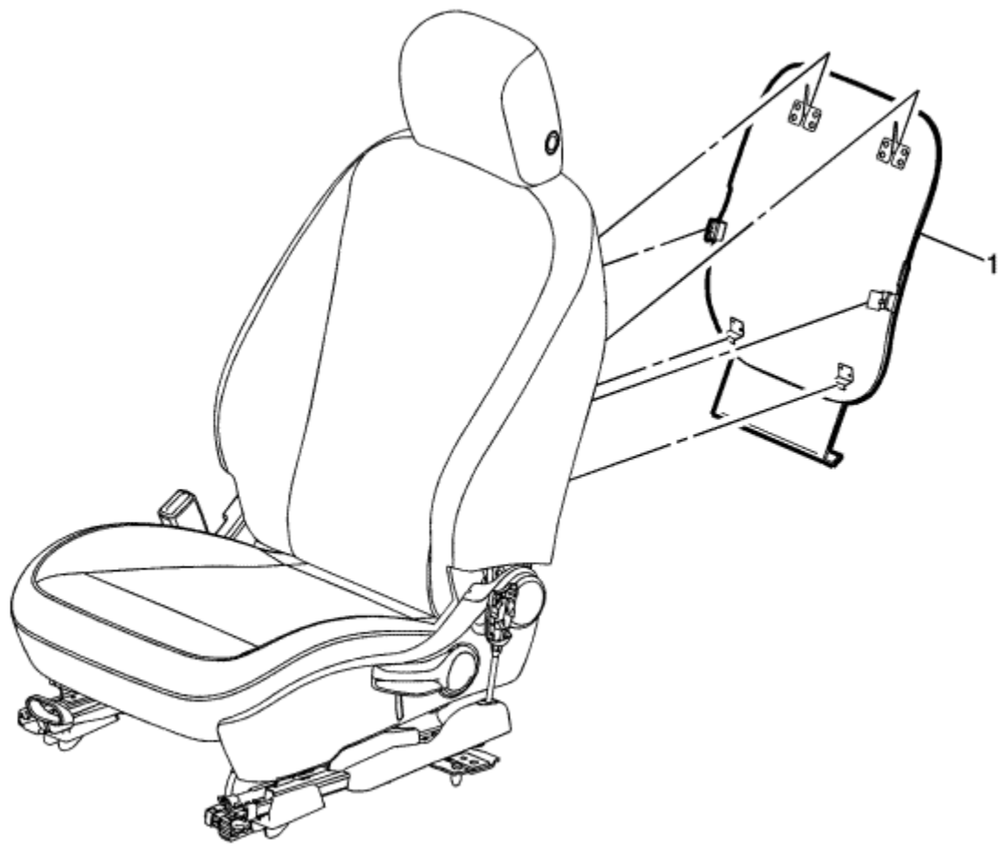

Callout	Component Name
1	Front Seat Back Cushion Filler Panel **Procedure** 1. Recline seat back to full forward tilt angle.

2. Disengage the J-channel at the bottom of the finish panel.
3. Use a flat-bladed to disengage the tabs securing the panel to the bottom of the seat back frame. Push up on the tabs to disengage.
4. For panel removal, turn panel counter-clockwise to release lower left tab and then rotate clockwise to release the right side of panel.

© Copyright Chevrolet. All rights reserved

Rear Seat Latch Striker Bezel Replacement

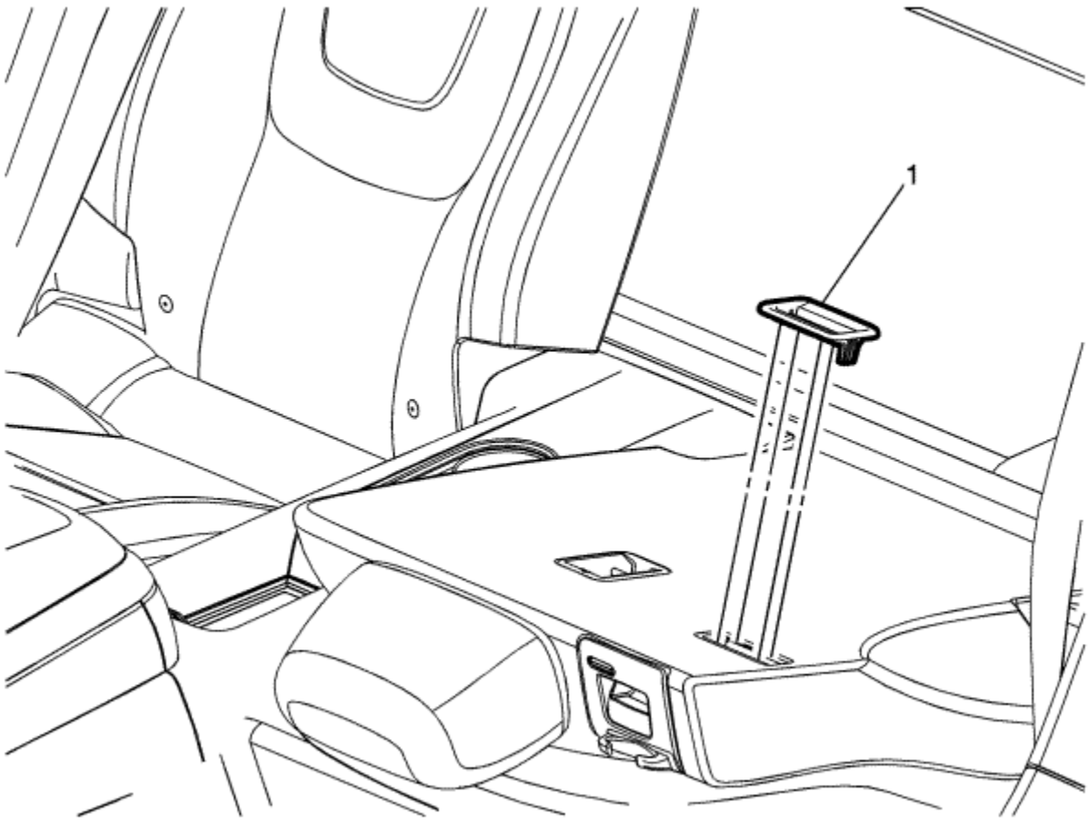

Callout	Component Name
1	Rear Seat Latch Striker Bezel **Procedure** 1. Lay the rear seat back down before trying to remove the bezel cover.

	2. Use a flat bladed tool to release the top tab to avoid breakage.

© Copyright Chevrolet. All rights reserved

Rear Seat Head Restraint Replacement

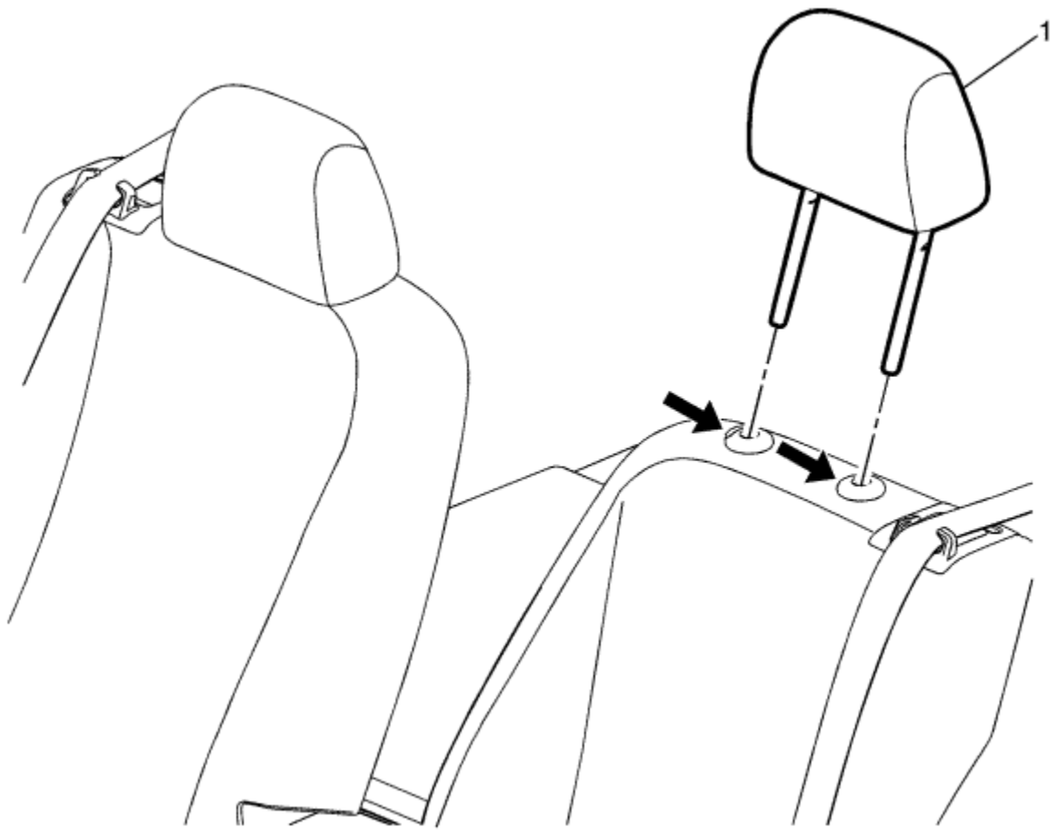

Callout	Component Name
1	Rear Seat Head Restraint **Procedure** 1. Depress the large button on the head restraint guide and raise the head restraint to the full up position.

	2. Depress the small button on the opposite head restraint guide and pull upward to remove from the seat.

© Copyright Chevrolet. All rights reserved

Rear Seat Head Restraint Guide Replacement

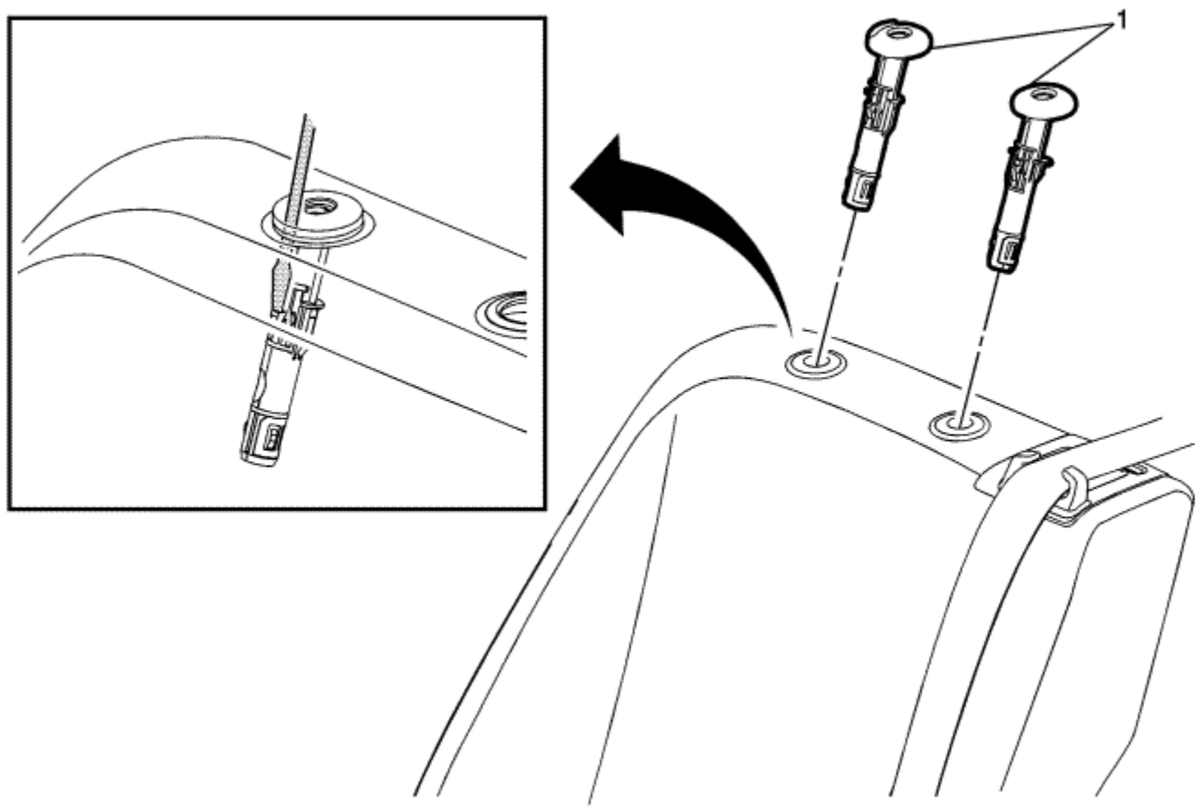

Callout	Component Name
Preliminary Procedure Remove the rear seat head restraint. Refer to Rear Seat Head Restraint Replacement .	
	Rear Seat Head Restraint Guide

1	**Procedure** Using a suitable flat-bladed tool, slide the tool between the cushion and the guide until you find the slot on the outboard side of the guide. Push inward on the guide slot tab, while pulling upward to remove the guide from the seat back frame.

© Copyright Chevrolet. All rights reserved

Rear Seat Back Cushion Pivot Support Replacement

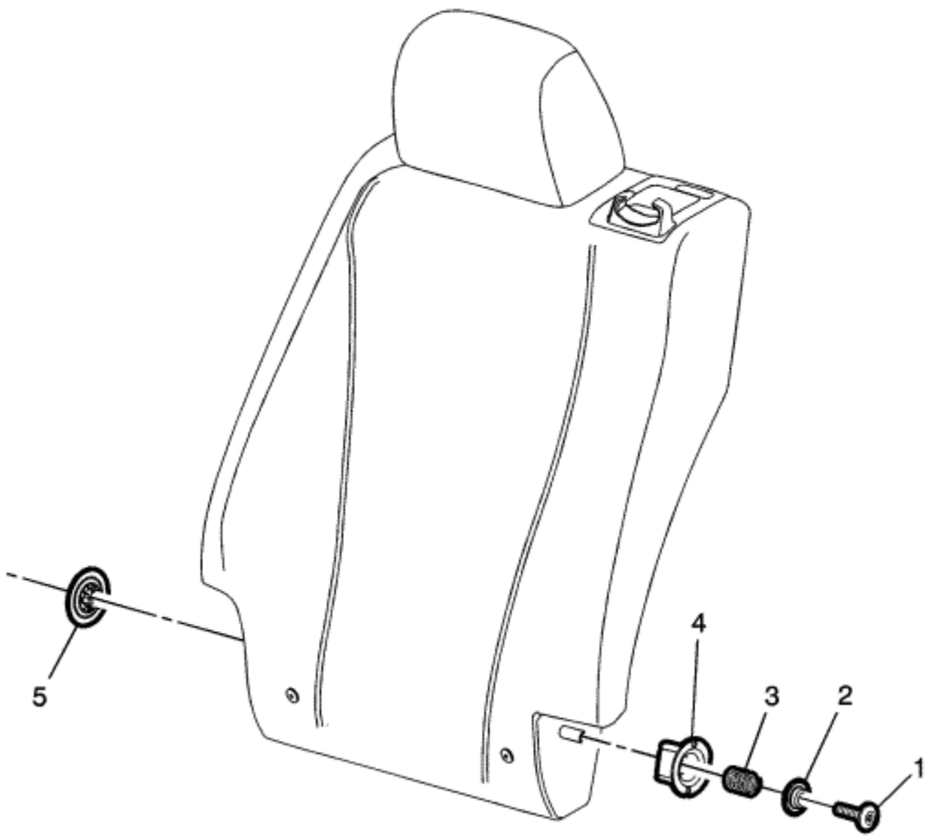

Callout	Component Name
Preliminary Procedure Remove the rear seat back cushion. Refer to Rear Seat Back Cushion Replacement .	
	Rear Seat Back Outer Pivot Bolt

1	**Caution:** Refer to Fastener Caution in the Preface section. **Tighten** 23 N·m (17 lb ft)
2	Rear Seat Back Cushion Outer Pivot Bushing
3	Rear Seat Back Cushion Outer Pivot Bolt Spring
4	Rear Seat Back Cushion Pivot Support Housing
5	Rear Seat Back Centre Finish Cover

© Copyright Chevrolet. All rights reserved

Rear Seat Cushion Cover and Pad Replacement

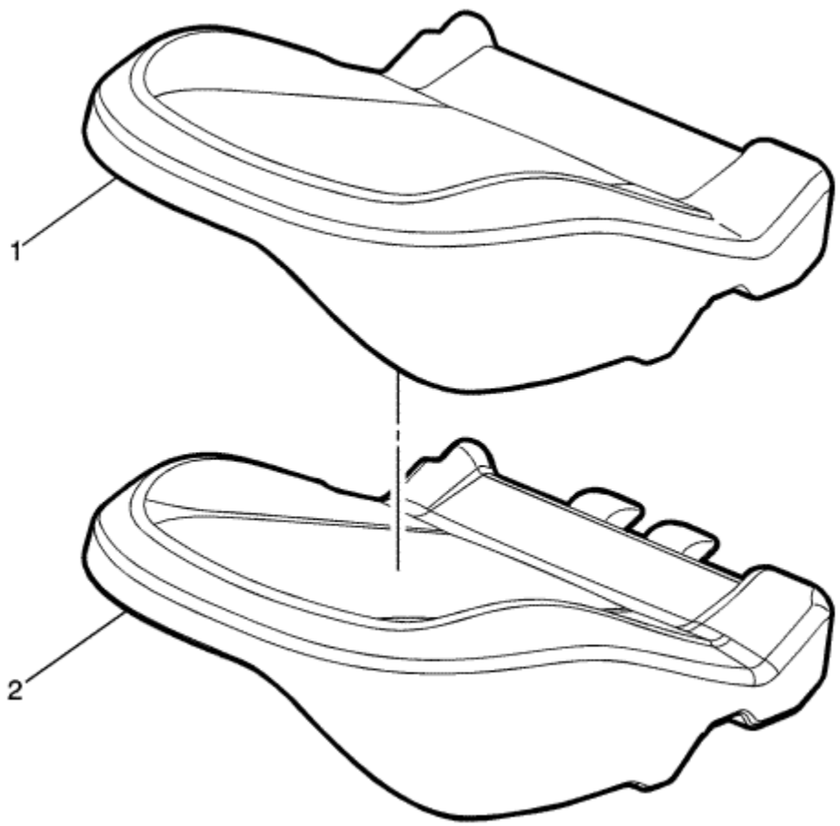

Callout	Component Name
Preliminary Procedure Remove the rear seat cushion. Refer to Rear Seat Cushion Replacement	
	Rear Seat Cushion Cover

1	**Procedure** Remove the push pin retainers and u-clips that secure the rear seat cushion cover to the pad. **Tip** When installing the rear seat cushion cover, pull the cover tightly in all corners to ensure that no creasing occurs.
2	Rear Seat Cushion Pad

© Copyright Chevrolet. All rights reserved

Rear Seat Cushion Replacement

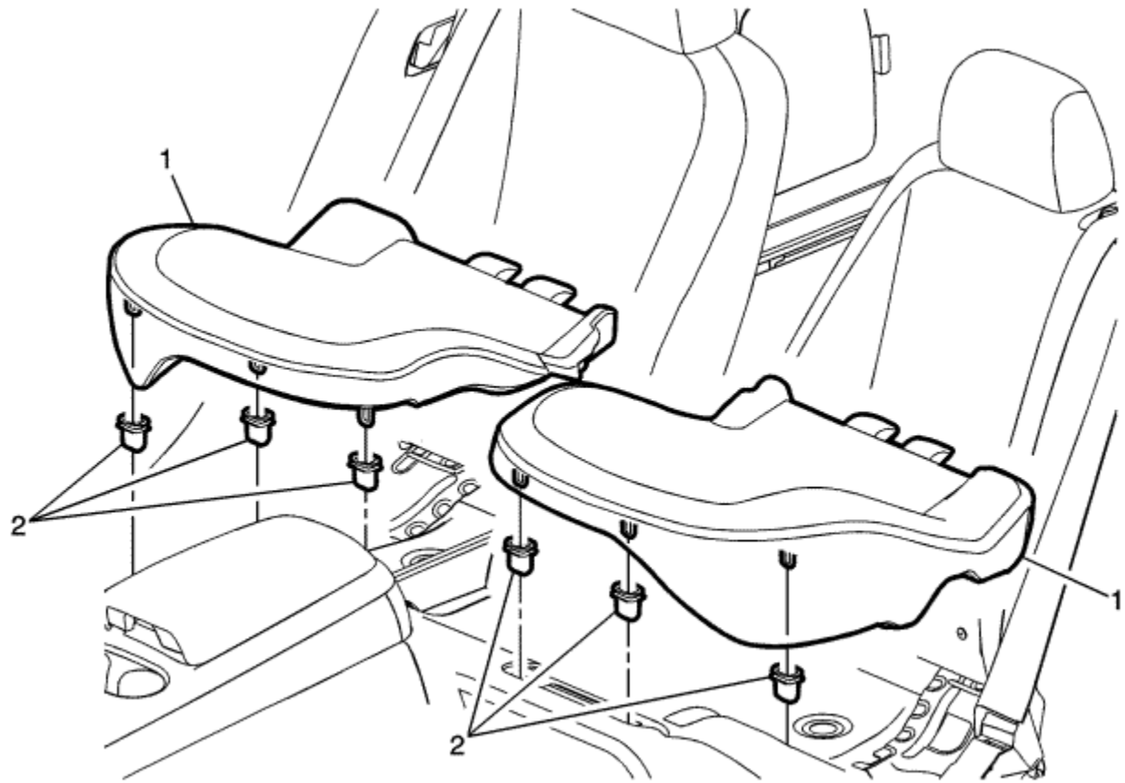

Callout	Component Name
1	Rear Seat Cushion (Qty: 2) **Procedure** 1. Lift up on the front of the seat cushion to disengage the cushion from the floor retainers.

	2. Push down on the rear of the seat to unhook the cushion from the lower cross bar. 3. Transfer components as necessary.
2	Rear Seat Cushion Retainer (Qty: 6)

© Copyright Chevrolet. All rights reserved

Rear Seat Latch Replacement

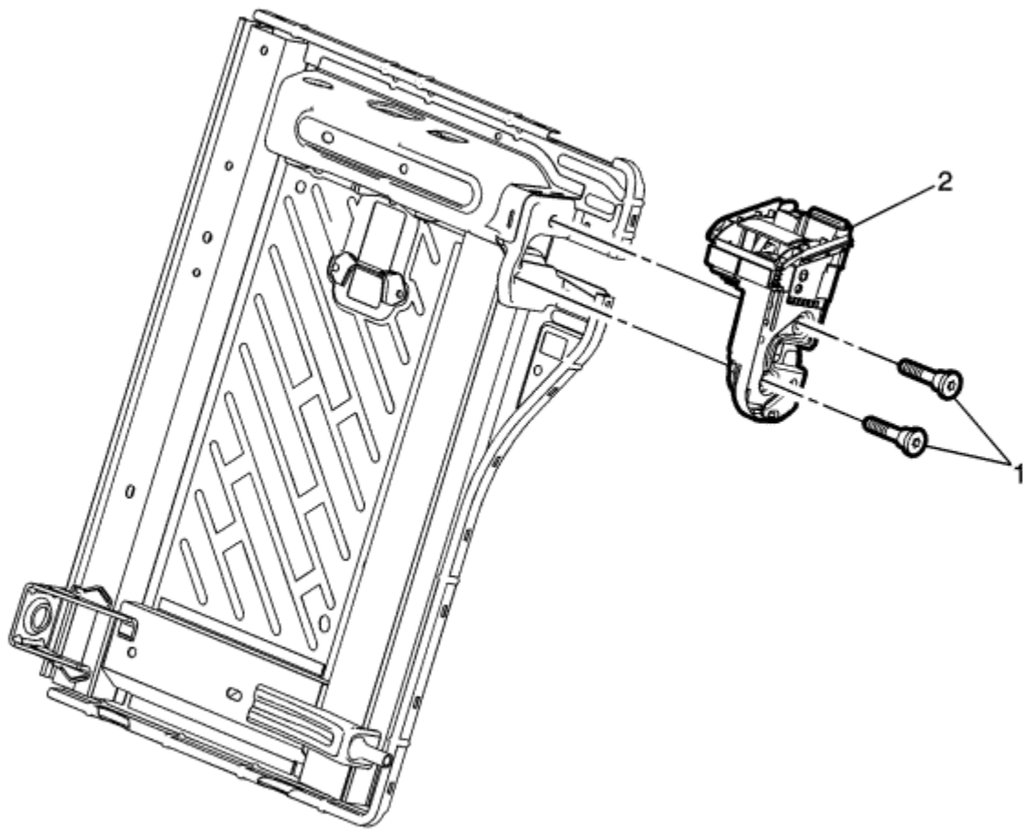

Callout	Component Name
Preliminary Procedure 1. Remove the rear seat back cushion. Refer to Rear Seat Back Cushion Replacement . 2. Remove the rear seat back cushion cover and pad. Refer to Rear Seat Back Cushion Cover and Pad Replacement .	

1	Rear Seat Latch Fasteners (Qty: 2) **Caution:** Refer to Fastener Caution in the Preface section. **Tighten** 45 N·m (33 lb ft)
2	Rear Seat Latch

© Copyright Chevrolet. All rights reserved

Rear Seat Back Cushion Replacement

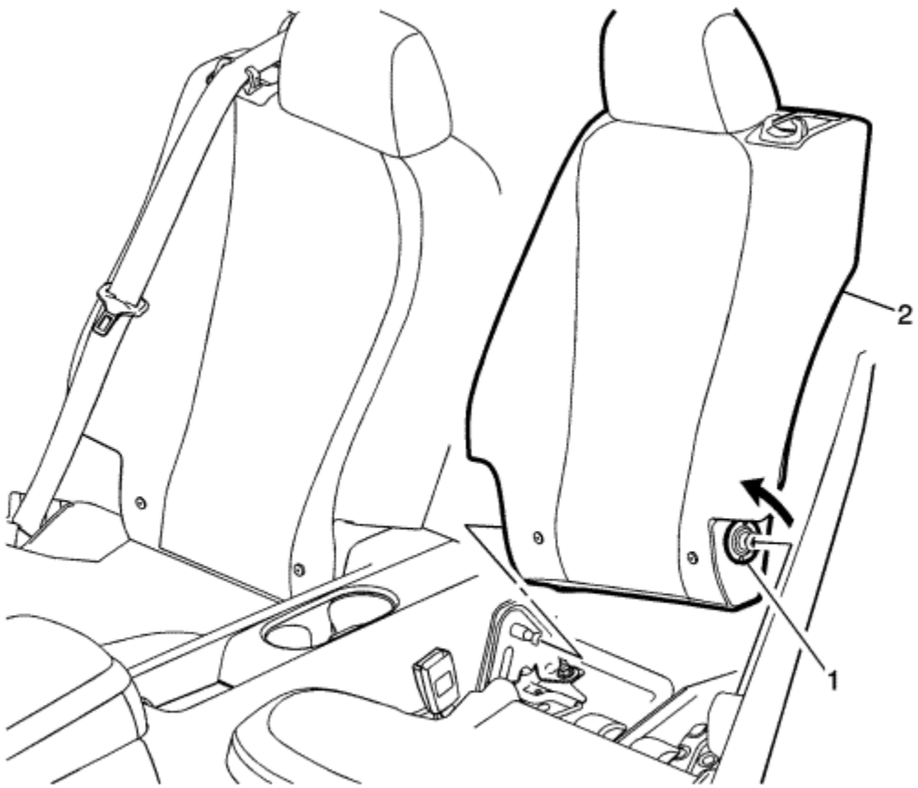

Callout	Component Name
1	Rear Seat Back Cushion Pivot Support **Procedure** 1. Pull the rear seat back cushion latch release located on the top of the rear seat back cushion, and fold the rear seat back cushion forward.

	2. Push in on the rear seat back cushion pivot support, and release from bracket.
2	Rear Seat Back Cushion **Procedure** 1. Pull up on the outer side of the rear seat back cushion and remove the rear seat back cushion from the bracket and hinge. 2. Transfer components as necessary.

© Copyright Chevrolet. All rights reserved

Rear Seat Back Cushion Panel Replacement

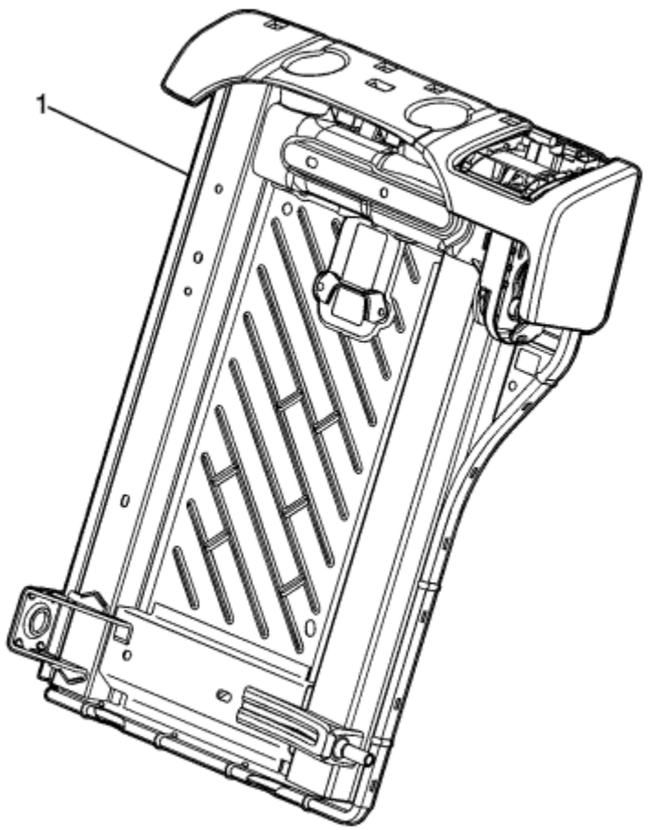

Callout	Component Name
Preliminary Procedure Remove the rear seat latch. Refer to Rear Seat Latch Replacement	
	Rear Seat Back Cushion Panel

1	**Procedure** If replacing the seat back panel, transfer components as necessary.

© Copyright Chevrolet. All rights reserved

Rear Seat Back Cushion Cover and Pad Replacement

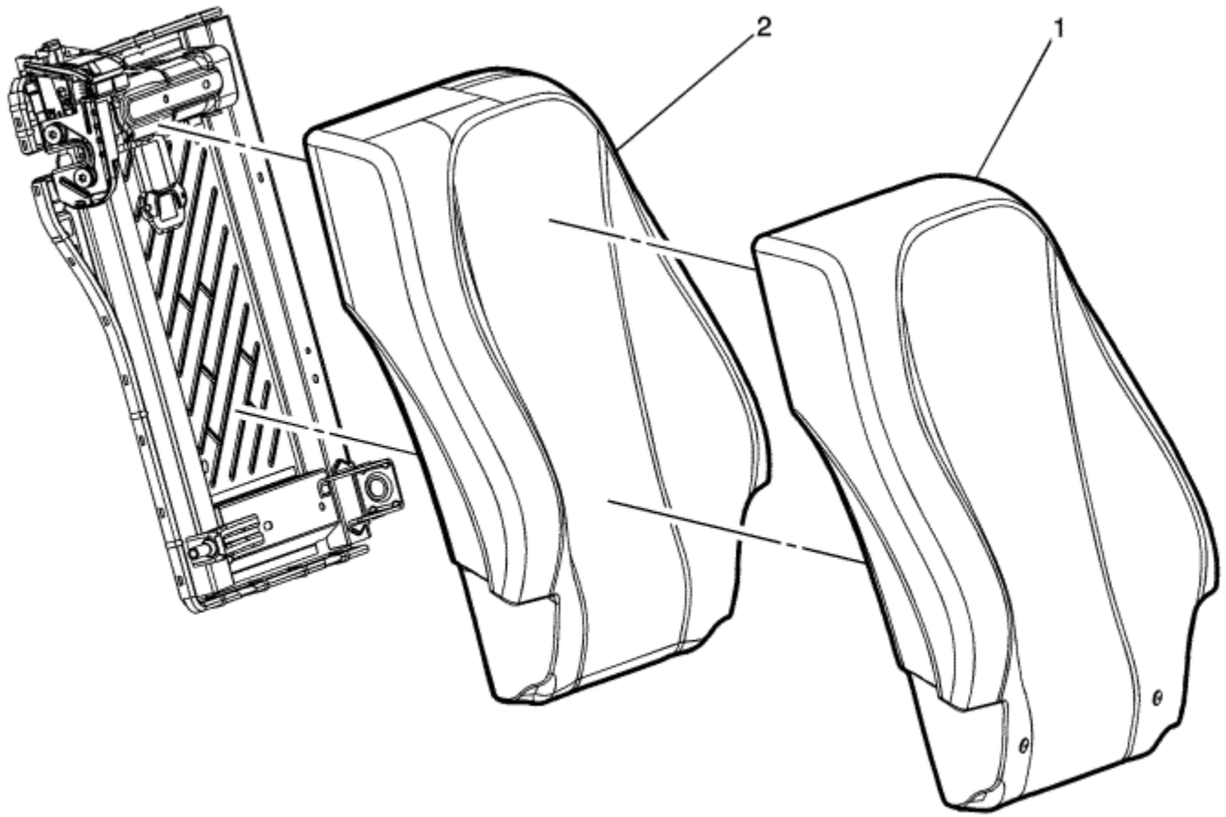

Callout	Component Name
Preliminary Procedures	

1. Remove the rear seat back cushion. Refer to Rear Seat Back Cushion Replacement
2. Remove the rear seat head restraint guide. Refer to Rear Seat Head Restraint Guide Replacement
3. Remove the rear seat back cushion latch release handle bezel. Refer to Rear Seat Back Cushion Latch Release Handle Bezel Replacement

4. Remove the rear seat anchor plate bezel. Refer to Rear Seat Anchor Plate Bezel Replacement
5. Remove the rear seat latch striker bezel. Refer to Rear Seat Latch Striker Bezel Replacement
6. Remove the rear seat back cushion pivot support. Refer to Rear Seat Back Cushion Pivot Support Replacement

1	Rear Seat Back Cushion Cover **Procedure** 1. Release the channels securing the cover to the seat back cushion panel. 2. Remove the hook and loop fasteners that secure the rear seat back cushion cover to the pad.
2	Rear Seat Back Cushion Pad

© Copyright Chevrolet. All rights reserved

Rear Seat Back Cushion Hinge Replacement

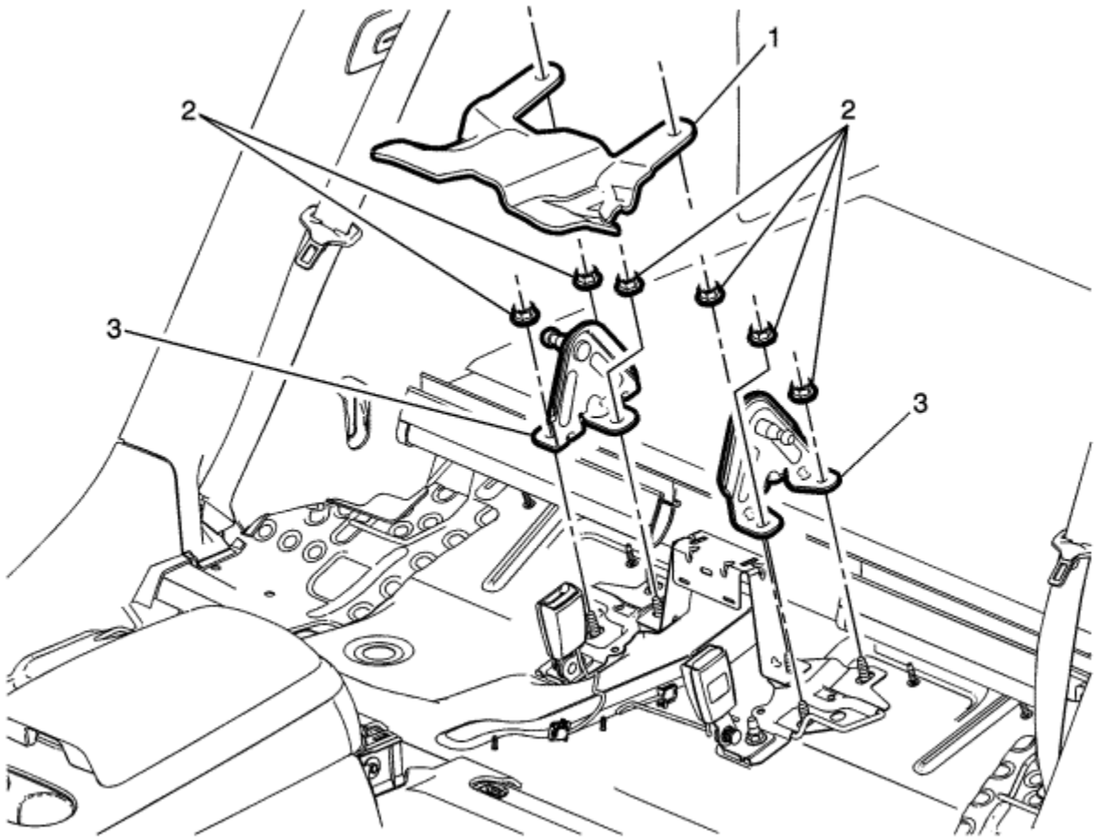

Callout	Component Name

Preliminary Procedure

1. Remove the rear seat cushion. Refer to Rear Seat Cushion Replacement
2. Remove the front floor rear console. Refer to Front Floor Rear Console Replacement
3. Remove the rear seat back cushion. Refer to Rear Seat Back Cushion Replacement

1	Rear Floor Carpet Panel
2	Rear Seat Back Cushion Hinge Fastener (Qty: 6) **Caution:** Refer to Fastener Caution in the Preface section. **Tighten** 43 N·m (32 lb ft)
3	Rear Seat Back Cushion Hinge (Qty: 2)

© Copyright Chevrolet. All rights reserved

Rear Seat Back Cushion Latch Release Handle Bezel Replacement

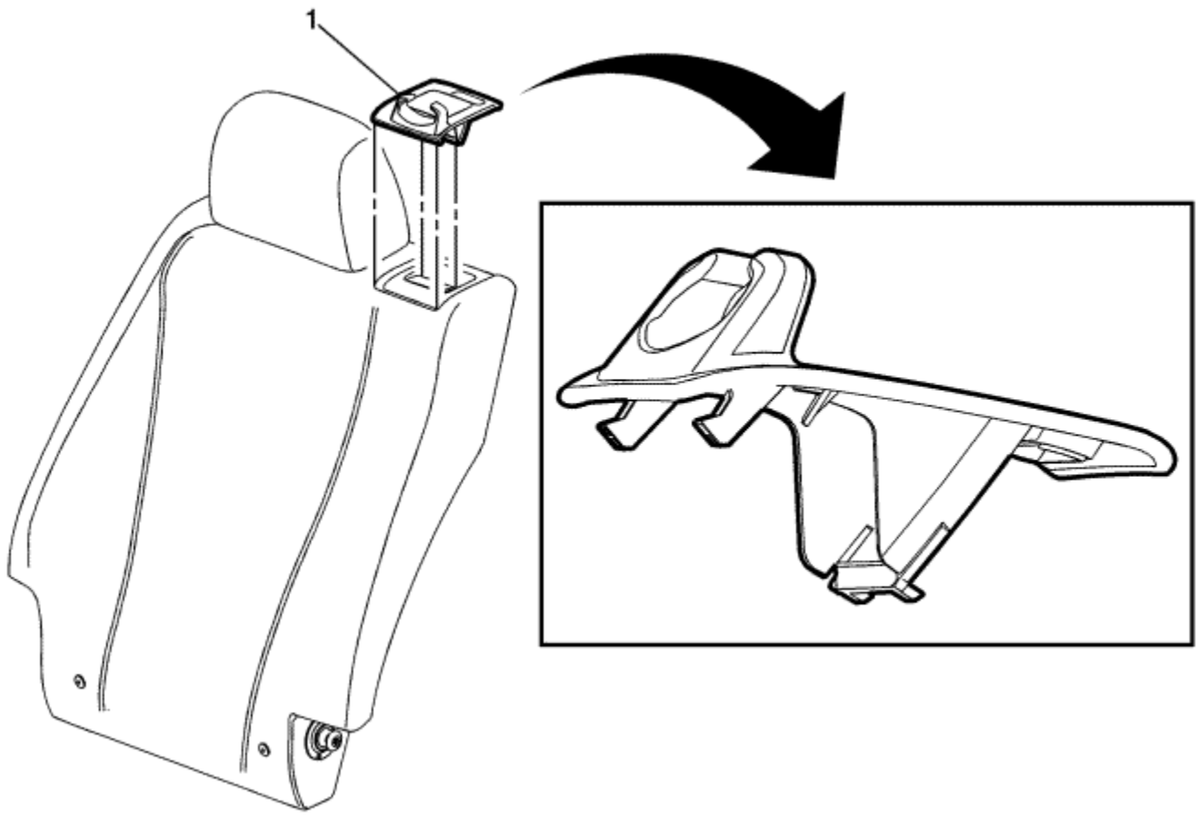

Callout	Component Name
1	Rear Seat Back Cushion Latch Release Handle Bezel **Procedure** Use a flat-bladed tool to tilt the rear of the handle upward, then lifting and pulling the bezel rearward to disengage the front hooks.

© Copyright Chevrolet. All rights reserved

Rear Seat Anchor Plate Bezel Replacement

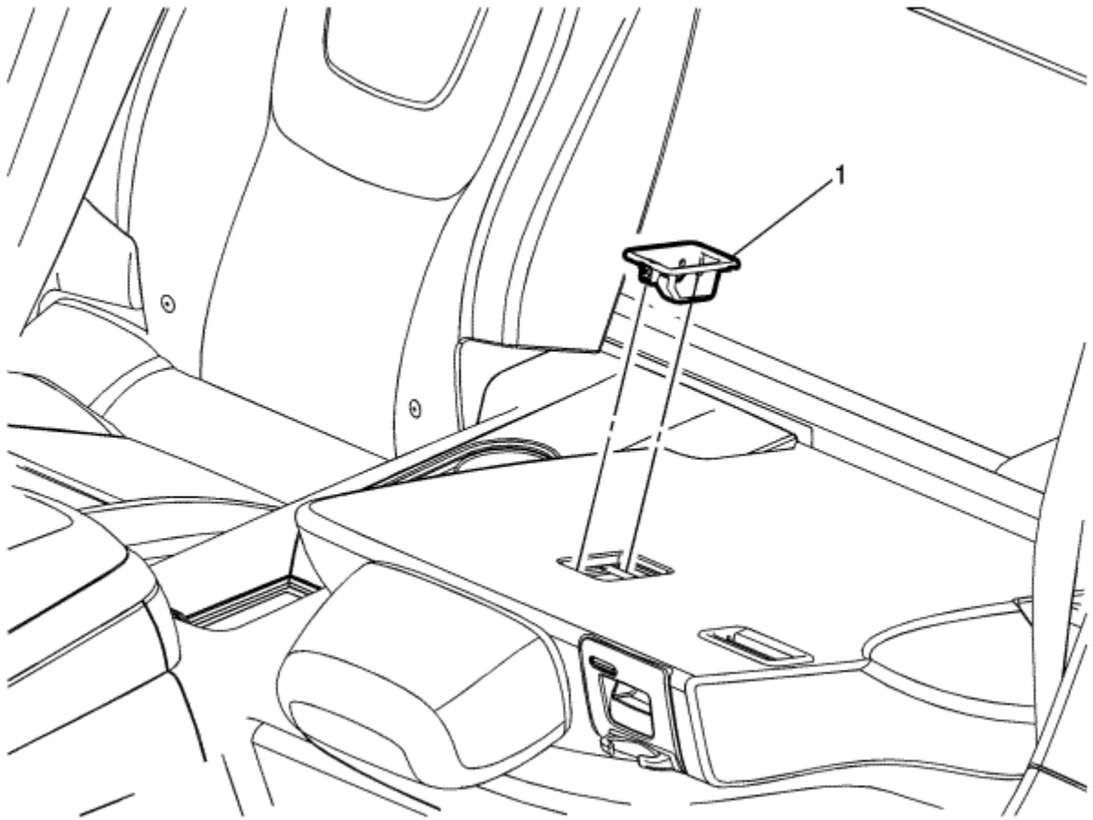

Callout	Component Name
1	Rear Seat Anchor Plate Bezel **Procedure** 1. Fold the rear seat back down before removing the bezel cover.

	2. Use a flat bladed tool to release the cover to avoid breakage.

© Copyright Chevrolet. All rights reserved

Heated/Cooled Seat Schematics

Heated Seats

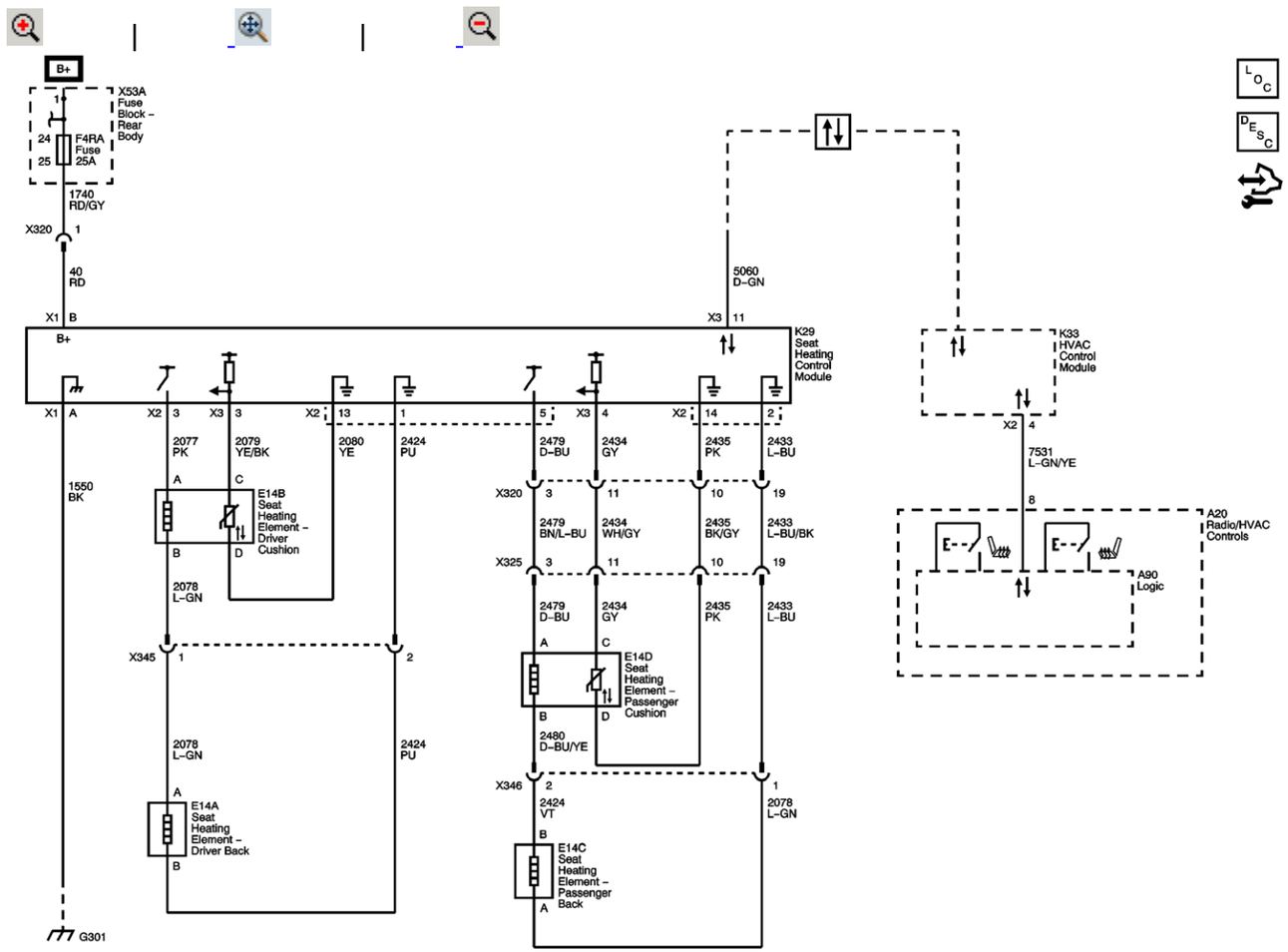

Master Electrical Component List

Heated Seats Description and Operation

F2RA, F3RA, F4RA, F5RA, F7RA, F8RA, F10RA, F12RA and F13RA Fuses

Data Communication Schematics

G301 and G406

© Copyright Chevrolet. All rights reserved

DTC B1925 or B2170

Diagnostic Instructions

- Perform the Diagnostic System Check - Vehicle prior to using this diagnostic procedure.
- Review Strategy Based Diagnosis for an overview of the diagnostic approach.
- Diagnostic Procedure Instructions provides an overview of each diagnostic category.

DTC Descriptors

DTC B1925 02: Driver Seat Cushion Heater Sensor Circuit Short to Ground

DTC B1925 05: Driver Seat Cushion Heater Sensor Circuit High Voltage/Open

DTC B2170 02: Passenger Seat Cushion Heater Sensor Circuit Short to Ground

DTC B2170 05: Passenger Seat Cushion Heater Sensor Circuit High Voltage/Open

Diagnostic Fault Information

Circuit	Short to Ground	Open/High Resistance	Short to Voltage	Signal Performance
Driver Heated Seat Element Voltage Control	B242A 02	B2425 0D	B242A 01	B2425 0B, B2425 0E
Driver Heated Seat Element Ground Control	B242A 02	B2425 0D	B242A 01	B2425 0B, B2425 0E
Driver Heated Seat Cushion Temperature Sensor Signal	B1925 02	B1925 05	B1925 05	B2345 13
Driver Heated Seat Cushion Temperature Sensor Low Reference	-	B1925 05	-	B2345 13
Passenger Heated Seat Element Voltage Control	B242A 02	B2430 0D	B242A 01	B2430 0B, B2430 0E
Passenger Heated Seat Element Ground Control	B242A 02	B2430 0D	B242A 01	B2430 0B, B2430 0E
Passenger Heated Seat Cushion Temperature Sensor Signal	B2170 02	B2170 05	B2170 05	B2345 13
Passenger Heated Seat Cushion Temperature Sensor Low Reference	-	B2170 05	-	B2345 13

Circuit/System Description

The heated seat temperature sensor that set this diagnostic trouble code (DTC) is located in the seat cushion just under the seat cover with the seat heating element. The seat heating control module supplies a 5 V reference voltage through the temperature sensor signal circuit and a ground through the low reference circuit to the sensor. The module monitors the voltage of the sensor signal circuit to determine the temperature of the seat. The temperature sensor varies in resistance based on the temperature of the heating element causing the signal voltage to change. Once the seat reaches the set temperature, the module will then cycle the control circuit of the heating elements ON and OFF in order to maintain the desired seat temperature based on the feedback voltage from the sensor.

Conditions for Running the DTC

- DTC B1325 must not be present.
- The seat heating control module must be powered.

Conditions for Setting the DTC

B1925 02 or B2170 02

The temperature sensor voltage drops below 0.6 V for more than 1 second.

B1925 05 or B2170 05

The temperature sensor voltage is greater than 5 V for more than 1 second.

Action Taken When the DTC Sets

The heated seat function for the affected seat will be disabled.

Conditions for Clearing the DTC

- The current DTC will clear and set the code to history 3 seconds after the reference voltage returns to normal operating range and the vehicle is cycled Vehicle OFF then back to Vehicle ON or Vehicle in Service Mode.
- The history DTC will clear after 40 consecutive fault-free Vehicle On cycles have occurred.

Reference Information

Schematic Reference

Heated/Cooled Seat Schematics

Connector End View Reference

Component Connector End Views

Description and Operation

Heated Seats Description and Operation

Electrical Information Reference

- Circuit Testing
- Connector Repairs
- Testing for Intermittent Conditions and Poor Connections
- Wiring Repairs

Scan Tool Reference

Control Module References for scan tool information

Circuit/System Testing

1. Vehicle OFF, disconnect the harness connector at the appropriate E14B or E14D seat cushion heating element.
2. Test for less than 10 Ω between the low reference circuit terminal D and ground.
   If greater than the specified range, test the low reference circuit for an open/high resistance. If the circuit test normal, replace the K29 seat heating control module.
3. Vehicle in Service Mode, test for 4.8 - 5.2 V between the signal circuit terminal C and ground.
   If less than the specified range, test the signal circuit for a short to ground or an open/high resistance. If the circuit tests normal, replace the K29 seat heating control module.
   If greater than the specified range, test the signal circuit for a short to voltage. If the circuit tests normal, replace the K29 seat heating control module.
4. If all circuits test normal, test or replace the E14 seat cushion heating element.

Component Testing

E14B or E14D Seat Cushion Heating Element

1. Vehicle OFF, disconnect the harness connector at the appropriate E14B or E14D seat cushion heating element.
2. Test for 500 Ω - 300 kΩ between the signal circuit terminal C and the low reference circuit terminal D.
   If not within the specified range, replace the E14 seat cushion heating element.

Repair Instructions

Perform the Diagnostic Repair Verification after completing the diagnostic procedure.

- Driver Seat Cushion Heater Replacement
- Passenger Seat Cushion Heater Replacement
- Control Module References for seat heating control module replacement, setup, and programming

&#169© Copyright Chevrolet. All rights reserved

DTC B2345

Diagnostic Instructions

- Perform the Diagnostic System Check - Vehicle prior to using this diagnostic procedure.
- Review Strategy Based Diagnosis for an overview of the diagnostic approach.
- Diagnostic Procedure Instructions provides an overview of each diagnostic category.

DTC Descriptors

DTC B2345 13: Seat Heater Disable Circuit Low Voltage/High Temperature

Diagnostic Fault Information

Circuit	Short to Ground	Open/High Resistance	Short to Voltage	Signal Performance
Driver Heated Seat Element Voltage Control	B242A 02	B2425 0D	B242A 01	B2425 0B, B2425 0E
Driver Heated Seat Element Ground Control	B242A 02	B2425 0D	B242A 01	B2425 0B, B2425 0E
Driver Heated Seat Cushion Temperature Sensor Signal	B1925 02	B1925 05	B1925 05	B2345 13
Driver Heated Seat Cushion Temperature Sensor Low Reference	-	B1925 05	-	B2345 13
Passenger Heated Seat Element Voltage Control	B242A 02	B2430 0D	B242A 01	B2430 0B, B2430 0E
Passenger Heated Seat Element Ground Control	B242A 02	B2430 0D	B242A 01	B2430 0B, B2430 0E
Passenger Heated Seat Cushion Temperature Sensor Signal	B2170 02	B2170 05	B2170 05	B2345 13
Passenger Heated Seat Cushion Temperature Sensor Low Reference	-	B2170 05	-	B2345 13

Circuit/System Description

The seat heating control module controls seat heating operation for both the driver and front passenger seats. The heating elements are controlled through individual high side and low side control circuits. The low side control circuits for both seats are connected to a common reference point internal to the module. This reference point is biased to approximately 2.5 V. Before the seat heating control module will allow heated seat operation, it checks to see if this biased voltage is shorted to ground or voltage. Once the module verifies that it is not closing to a shorted heating element, it allows for heated seat operation. The module will then continue to monitor the heating elements for a shorted circuit.

Conditions for Running the DTC

- DTC B1325 must not be present.
- The seat heating control module must be powered.

Conditions for Setting the DTC

B2345 13

Any temperature sensor input that remains below 1.5 V for more than 1 second.

Action Taken When the DTC Sets

The heated seat function for both front seats will be disabled.

Conditions for Clearing the DTC

- The current DTC will clear and set the code to history 3 seconds after the reference voltage returns to normal operating range and the vehicle is cycled Vehicle OFF then back to Vehicle ON or Vehicle in Service Mode.
- The history DTC will clear after 40 consecutive fault-free Vehicle On cycles have occurred.

Reference Information

Schematic Reference

Heated/Cooled Seat Schematics

Connector End View Reference

Component Connector End Views

Description and Operation

Heated Seats Description and Operation

Electrical Information Reference

- Circuit Testing

- Connector Repairs
- Testing for Intermittent Conditions and Poor Connections
- Wiring Repairs

Scan Tool Reference

Control Module References for scan tool information

Circuit/System Testing

1. Vehicle OFF, disconnect the X2, X3 harness connectors at the K29 seat heating control module.
2. Test for greater than 3.0 kΩ between the signal and the low reference circuits listed below:
   - E14B driver seat cushion terminal 3 X3 and terminal 13 X2
   - E14D passenger seat cushion terminal 4 X3 and terminal 14 X2

     If less than the specified range, test for a short between the signal and low reference circuits. If the circuits test normal, replace the appropriate E14 seat cushion heating element.
3. If all circuits test normal, replace the K29 seat heating control module.

Repair Instructions

Perform the Diagnostic Repair Verification after completing the diagnostic procedure.

- Driver Seat Cushion Heater Replacement
- Passenger Seat Cushion Heater Replacement
- Control Module References for seat heating control module replacement, setup and programming

&#169© Copyright Chevrolet. All rights reserved

DTC B2425 or B2430

Diagnostic Instructions

- Perform the Diagnostic System Check - Vehicle prior to using this diagnostic procedure.
- Review Strategy Based Diagnosis for an overview of the diagnostic approach.
- Diagnostic Procedure Instructions provides an overview of each diagnostic category.

DTC Descriptors

DTC B2425 0B: Driver Seat Cushion Heater Circuit High Current

DTC B2425 0D: Driver Seat Cushion Heater Circuit High Resistance

DTC B2425 0E: Driver Seat Cushion Heater Circuit Low Resistance

DTC B2430 0B: Passenger Seat Cushion Heater Circuit High Current

DTC B2430 0D: Passenger Seat Cushion Heater Circuit High Resistance

DTC B2430 0E: Passenger Seat Cushion Heater Circuit Low Resistance

Diagnostic Fault Information

Circuit	Short to Ground	Open/High Resistance	Short to Voltage	Signal Performance
Driver Heated Seat Element Voltage Control	B242A 02	B2425 0D	B242A 01	B2425 0B, B2425 0E
Driver Heated Seat Element Ground Control	B242A 02	B2425 0D	B242A 01	B2425 0B, B2425 0E
Driver Heated Seat Cushion Temperature Sensor Signal	B1925 02	B1925 05	B1925 05	B2345 13
Driver Heated Seat Cushion Temperature Sensor Low Reference	-	B1925 05	-	B2345 13
Passenger Heated Seat Element Voltage Control	B242A 02	B2430 0D	B242A 01	B2430 0B, B2430 0E
Passenger Heated Seat Element Ground Control	B242A 02	B2430 0D	B242A 01	B2430 0B, B2430 0E

Passenger Heated Seat Cushion Temperature Sensor Signal	B2170 02	B2170 05	B2170 05	B2345 13
Passenger Heated Seat Cushion Temperature Sensor Low Reference	-	B2170 05	-	B2345 13

Circuit/System Description

The driver and front passenger heated seats are controlled by the seat heating control module that is located under the driver seat cushion. When the heated seat is active, the module applies power through a common voltage supply circuit to the seat heater elements. The module controls the seat temperature by providing a pulse width modulation (PWM) ground through the seat heater element control circuit to the heater elements. The module then monitors the current flow through the heating elements and the rate of change of the temperature sensor to verify correct heated seat operation.

Conditions for Running the DTC

- DTC B1325 must not be present.
- The seat heating control module must be powered and the heated seat must be enabled.

Conditions for Setting the DTC

B2425 0D or B2430 0D

By measuring current and voltage output to the seat heating elements every 10 seconds, the seat heating control module calculates that the heating element resistance is above the maximum resistance.

B2425 0B, B2425 0E, B2430 0B, or B2430 0E

By measuring current and voltage output to the seat heating elements every 10 seconds, the seat heating control module calculates that the heating element resistance is below the minimum resistance.

Action Taken When the DTC Sets

The heated seat function for the affected seat will be disabled.

Conditions for Clearing the DTC

- The current DTC will clear and set the code to history 3 seconds after the reference voltage returns to normal operating range and the vehicle is cycled Vehicle OFF then back to Vehicle ON or Vehicle in Service Mode.
- The history DTC will clear after 40 consecutive fault-free Vehicle On cycles have occurred.

Reference Information

Schematic Reference

Heated/Cooled Seat Schematics

Connector End View Reference

Component Connector End Views

Description and Operation

Heated Seats Description and Operation

Electrical Information Reference

- Circuit Testing
- Connector Repairs
- Testing for Intermittent Conditions and Poor Connections
- Wiring Repairs

Scan Tool Reference

Control Module References for scan tool information

Circuit/System Testing

B2425 0B, B2425 0D, or B2425 0E

1. Vehicle OFF, disconnect the harness connector at the E14A seat back heating element.

   Note: Element resistance must be measured twice to ensure that all failure conditions are simulated. First with the seat unoccupied, then with the seat occupied.

2. Test for 0.5 - 5 Ω between terminal A and terminal B.
   If not within the specified range, replace the E14A seat back heating element.
3. Connect the harness connector at the E14A seat backrest heating element and disconnect the X2 harness connector at the K29 seat heating control module.

   Note: Element resistance must be measured twice to ensure that all failure conditions are simulated. First with the seat unoccupied, then with the seat occupied.

4. Test for 1 - 7 Ω between control circuit terminal 3 and control circuit terminal 1.
   If less than the specified range, test for a short between the control circuits. If the circuits test normal, replace the E14B seat cushion heating element.
   If greater than the specified range, test the control circuits for an open/high resistance. If the circuits test normal, replace the E14B seat cushion heating element.

5. If all circuits test normal, replace the K29 seat heating control module.

B2430 0B, B2430 0D, or B2430 0E

1. Vehicle OFF, disconnect the harness connector at the E14C seat back heating element.

   Note: Element resistance must be measured twice to ensure that all failure conditions are simulated. First with the seat unoccupied, then with the seat occupied.

2. Test for 0.5 - 5 Ω between terminal A and terminal B.
   If not within the specified range, replace the E14C seat back heating element.
3. Connect the harness connector at the E14C seat backrest heating element and disconnect the X2 harness connector at the K29 seat heating control module.

   Note: Element resistance must be measured twice to ensure that all failure conditions are simulated. First with the seat unoccupied, then with the seat occupied.

4. Test for 1 - 7 Ω between control circuit terminal 5 and control circuit terminal 2.
   If less than the specified range, test for a short between the control circuits. If the circuits test normal, replace the E14D seat cushion heating element.
   If greater than the specified range, test the control circuits for an open/high resistance. If the circuits test normal, replace the E14D seat cushion heating element.
5. If all circuits test normal, replace the K29 seat heating control module.

Repair Instructions

Perform the Diagnostic Repair Verification after completing the diagnostic procedure.

- Driver Seat Cushion Heater Replacement
- Passenger Seat Cushion Heater Replacement
- Control Module References for seat heating control module replacement, setup, and programming

&#169© Copyright Chevrolet. All rights reserved

DTC B242A

Diagnostic Instructions

- Perform the Diagnostic System Check - Vehicle prior to using this diagnostic procedure.
- Review Strategy Based Diagnosis for an overview of the diagnostic approach.
- Diagnostic Procedure Instructions provides an overview of each diagnostic category.

DTC Descriptors

DTC B242A 01: Seat Heaters Common Circuit Short to Battery

DTC B242A 02: Seat Heaters Common Circuit Short to Ground

Diagnostic Fault Information

Circuit	Short to Ground	Open/High Resistance	Short to Voltage	Signal Performance
Driver Heated Seat Element Voltage Control	B242A 02	B2425 0D	B242A 01	B2425 0B, B2425 0E
Driver Heated Seat Element Ground Control	B242A 02	B2425 0D	B242A 01	B2425 0B, B2425 0E
Driver Heated Seat Cushion Temperature Sensor Signal	B1925 02	B1925 05	B1925 05	B2345 13
Driver Heated Seat Cushion Temperature Sensor Low Reference	-	B1925 05	-	B2345 13
Passenger Heated Seat Element Voltage Control	B242A 02	B2430 0D	B242A 01	B2430 0B, B2430 0E
Passenger Heated Seat Element Ground Control	B242A 02	B2430 0D	B242A 01	B2430 0B, B2430 0E
Passenger Heated Seat Cushion Temperature Sensor Signal	B2170 02	B2170 05	B2170 05	B2345 13
Passenger Heated Seat Cushion Temperature Sensor Low Reference	-	B2170 05	-	B2345 13

Circuit/System Description

The seat heating control module controls the seat heating operation for both the driver and front passenger seats. The module controls the heating elements through individual high side and low side control circuits. The low side control circuits for both seats are connected to a common reference point internal to the module. This reference point is biased to approximately 2.5 V. Before the seat heating control module will allow heated seat operation, it checks to see if this biased voltage is shorted to ground or

voltage. Once the module verifies that it is not closing to a shorted heating element, it allows for heated seat operation. The module will then continue to monitor the heating elements for a shorted circuit.

Conditions for Running the DTC

- DTC B1325 must not be present.
- The seat heating control module must be powered.

Conditions for Setting the DTC

B242A 01

The seat heating control module detects a short to voltage on the heater element control circuits.

B242A 02

The seat heating control module detects a short to ground on the heater element control circuits.

Action Taken When the DTC Sets

The heated seat function for both seats will be disabled.

Conditions for Clearing the DTC

- The current DTC will clear and set the code to history 3 seconds after the reference voltage returns to normal operating range and the vehicle is cycled Vehicle OFF then back to Vehicle ON or Vehicle in Service Mode.
- The history DTC will clear after 40 consecutive fault-free Vehicle On cycles have occurred.

Reference Information

Schematic Reference

Heated/Cooled Seat Schematics

Connector End View Reference

Component Connector End Views

Description and Operation

Heated Seats Description and Operation

Electrical Information Reference

- Circuit Testing
- Connector Repairs
- Testing for Intermittent Conditions and Poor Connections
- Wiring Repairs

Scan Tool Reference

Control Module References for scan tool information

Circuit/System Testing

1. Vehicle OFF, disconnect the X2 harness connector at the K29 seat heating control module.
2. Test for infinite resistance between the control circuit terminal 3 and ground.
   If not the specified value, test the control circuit for a short to ground.
3. Test for infinite resistance between the control circuit terminal 5 and ground.
   If not the specified value, test the control circuit for a short to ground.
4. Vehicle in service mode, verify that a test lamp does not illuminate between the control circuit terminal 3 and ground.
   If the test lamp illuminates, test the control circuit for a short to voltage.
5. Verify that a test lamp does not illuminate between the control circuit terminal 5 and ground.
   If the test lamp illuminates, test the control circuit for a short to voltage.
6. If all circuits test normal, replace the K29 seat heating control module.

Repair Instructions

Perform the Diagnostic Repair Verification after completing the diagnostic procedure.

Control Module References for seat heating control module replacement, setup, and programming

&#169© Copyright Chevrolet. All rights reserved

Symptoms - Seat Heating and Cooling

Note: The following steps must be completed before using the symptom tables.

1. When diagnosing a heated seat system condition perform the Diagnostic System Check - Vehicle , before using the symptom tables in order to verify that all of the following are true:
   - There are no DTCs set.
   - The control module(s) can communicate via the serial data link.
2. Review the system operation in order to familiarize yourself with the system functions. Refer to Heated Seats Description and Operation .

Visual/Physical Inspection

- Inspect for aftermarket devices which could affect the operation of the power seats. Refer to Checking Aftermarket Accessories .
- Inspect the easily accessible or visible system components for obvious damage or conditions which could cause the symptom.
- Inspect the seat adjuster track for conditions which may cause binding or objects within the seat adjustment range which obstruct movement or interfere with wiring.

Intermittent

Faulty electrical connections or wiring may be the cause of intermittent conditions. Refer to Testing for Intermittent Conditions and Poor Connections .

Symptom List

Refer to the Front Heated Seat Malfunction diagnostic procedure in order to diagnose the symptom.

&#169© Copyright Chevrolet. All rights reserved

Front Heated Seat Malfunction

Diagnostic Instructions

- Perform the Diagnostic System Check - Vehicle prior to using this diagnostic procedure.
- Review Strategy Based Diagnosis for an overview of the diagnostic approach.
- Diagnostic Procedure Instructions provides an overview of each diagnostic category.

Diagnostic Fault Information

Circuit	Short to Ground	Open/High Resistance	Short to Voltage	Signal Performance
Driver Heated Seat Element Voltage Control	B242A 02	B2425 0D	B242A 01	B2425 0B, B2425 0E
Driver Heated Seat Element Ground Control	B242A 02	B2425 0D	B242A 01	B2425 0B, B2425 0E
Driver Heated Seat Cushion Temperature Sensor Signal	B1925 02	B1925 05	B1925 05	B2345 13
Driver Heated Seat Cushion Temperature Sensor Low Reference	-	B1925 05	-	B2345 13
Passenger Heated Seat Element Voltage Control	B242A 02	B2430 0D	B242A 01	B2430 0B, B2430 0E
Passenger Heated Seat Element Ground Control	B242A 02	B2430 0D	B242A 01	B2430 0B, B2430 0E
Passenger Heated Seat Cushion Temperature Sensor Signal	B2170 02	B2170 05	B2170 05	B2345 13
Passenger Heated Seat Cushion Temperature Sensor Low Reference	-	B2170 05	-	B2345 13

Circuit/System Description

The driver and passenger heated seats are controlled by separate heated seat switches that are located in the HVAC control. When a heated seat switch is pressed, a serial data message is sent from the HVAC control to the HVAC control module indicating the heated seat command. The HVAC control module serves as a gateway to transmit the message to the heated seat control module via the serial data line. In response to this message, the seat heating control module applies battery positive voltage through the element supply voltage circuit to the appropriate seat heating elements. The seat heating control module then sends a serial data message back to the HVAC control module to gateway the information to the HVAC control to either illuminate or turn off the appropriate temperature indicator.

Reference Information

Schematic Reference

Heated/Cooled Seat Schematics

Connector End View Reference

Component Connector End Views

Description and Operation

Heated Seats Description and Operation

Electrical Information Reference

- Circuit Testing
- Connector Repairs
- Testing for Intermittent Conditions and Poor Connections
- Wiring Repairs

Scan Tool Reference

Control Module References for scan tool information

Circuit/System Verification

1. Vehicle in Service Mode, observe the scan tool Driver Seat Heating/Venting/Cooling Mode parameter while pressing the driver HEATED seat switch. The reading should change between Off and Back & Cushion Heat.
   If not the specified value, replace the A26 HVAC control.
2. Observe the scan tool Passenger Seat Heating/Venting/Cooling Mode parameter while pressing the passenger HEATED seat switch. The reading should change between Off and Back & Cushion Heat.
   If not the specified value, replace the A26 HVAC control.
3. If all scan tool parameter readings are normal, there are no DTCs set, and the driver and/or passenger heated seat is inoperative, replace the K29 seat heating control module.

Repair Instructions

Perform the Diagnostic Repair Verification after completing the diagnostic procedure.

- Radio Control Assembly Replacement
- Control Module References for seat heating control module replacement, setup, and programming

&#169© Copyright Chevrolet. All rights reserved

Front Seat Heater Control Module Replacement

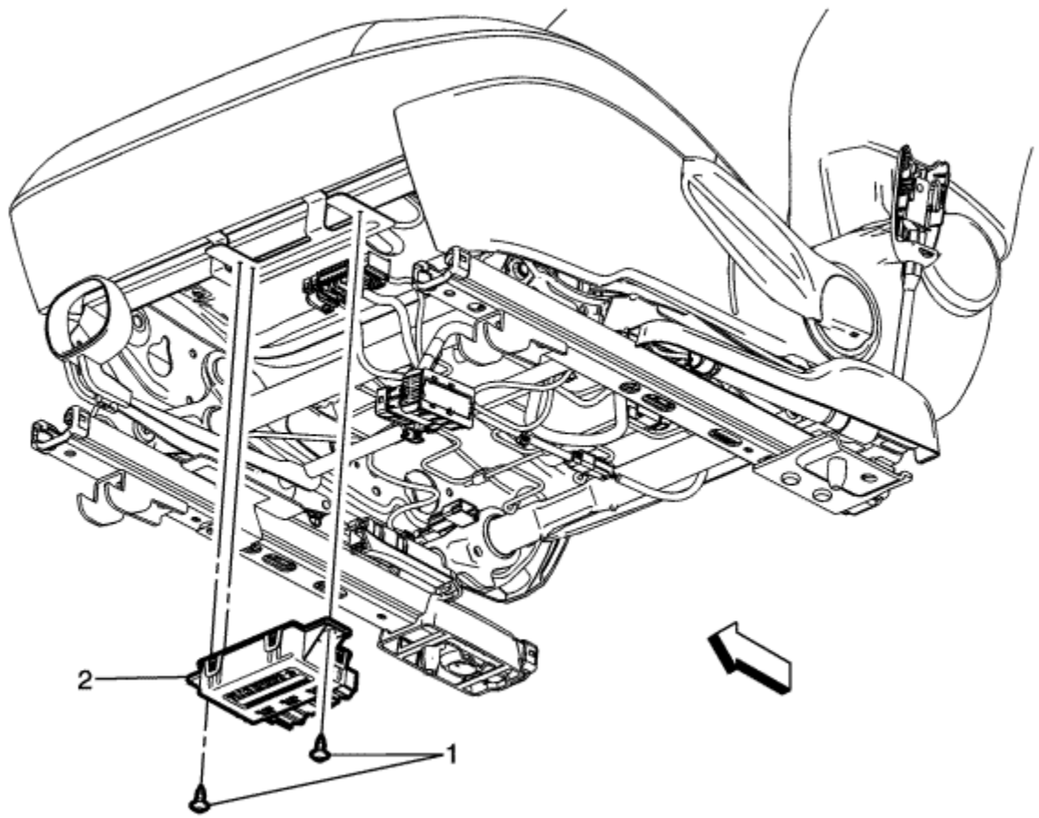

Callout	Component Name
Preliminary Procedure Disconnect the battery negative cable. Refer to Battery Negative Cable Disconnection and Connection .	
	Front Seat Heater Control Module Fastener (Qty: 2)

1	**Caution:** Refer to Fastener Caution in the Preface section. **Tighten** 3 N·m(27 lb in)
2	Front Seat Heater Control Module **Procedure** 1. Disconnect the electrical connector. 2. Disconnect the module from the bracket, then pull downward away from the bottom of the seat. 3. Refer to Control Module References for programming and setup information.

© Copyright Chevrolet. All rights reserved

Driver or Passenger Seat Back Cushion Heater Replacement

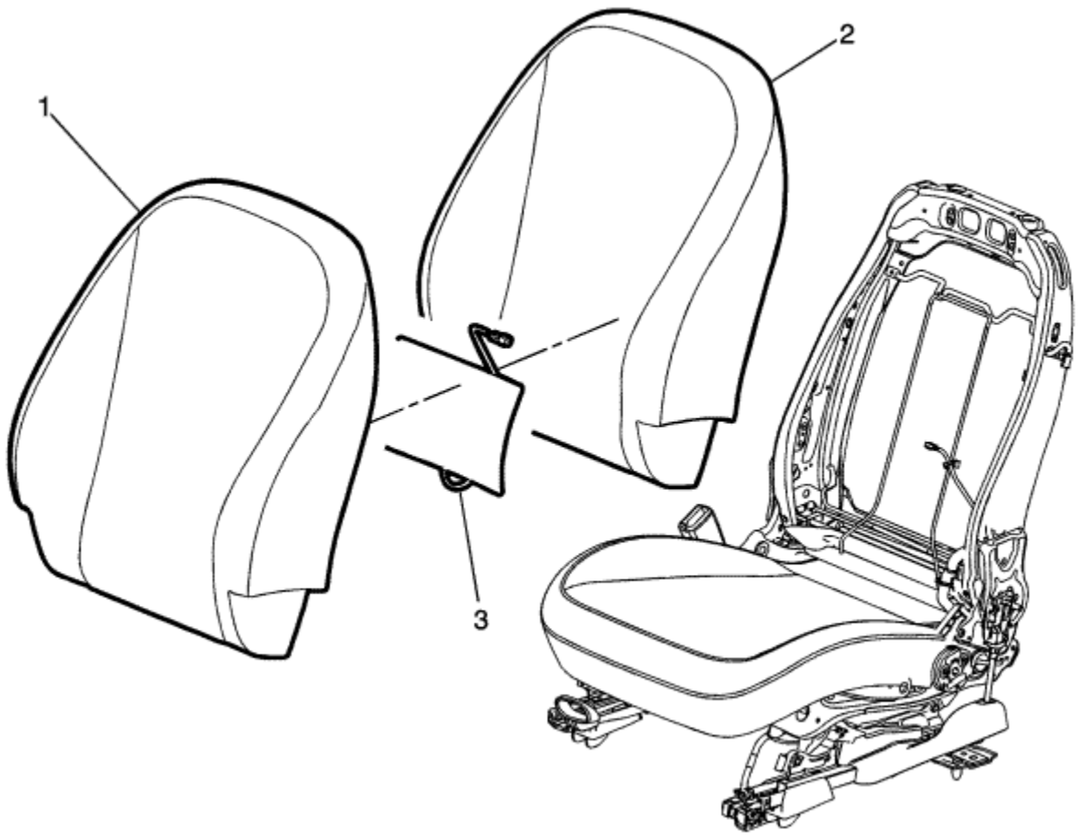

Callout	Component Name
Warning: Refer to SIR Warning in the Preface section. **Warning:** Do not repair or replace the seat stitching or seams in the seat back trim cover with an internal mounted seat side airbag module. Replace the complete seat back trim cover from the OEM. Non-OEM seat stitching may cause improper airbag deployment which could result in personal injury.	

Preliminary Procedure

1. Remove the driver or passenger seat. Refer to Driver or Passenger Seat Replacement
2. Remove the driver or passenger seat back cushion cover and pad. Refer to Driver or Passenger Seat Back Cushion Cover and Pad Replacement

1	Seat Back Cushion Cover **Procedure** Separate the seat cushion from the seat cushion pad.
2	Driver or Passenger Seat Back Cushion Pad
3	Driver or Passenger Seat Back Cushion Heater **Procedure** 1. Disconnect the electrical connector. 2. Remove the heater element leaving the old adhesive strips intact on the seat cushion. The new seat heater adhesive strips will be placed over the old adhesive strips.

© Copyright Chevrolet. All rights reserved

Driver Seat Cushion Heater Replacement

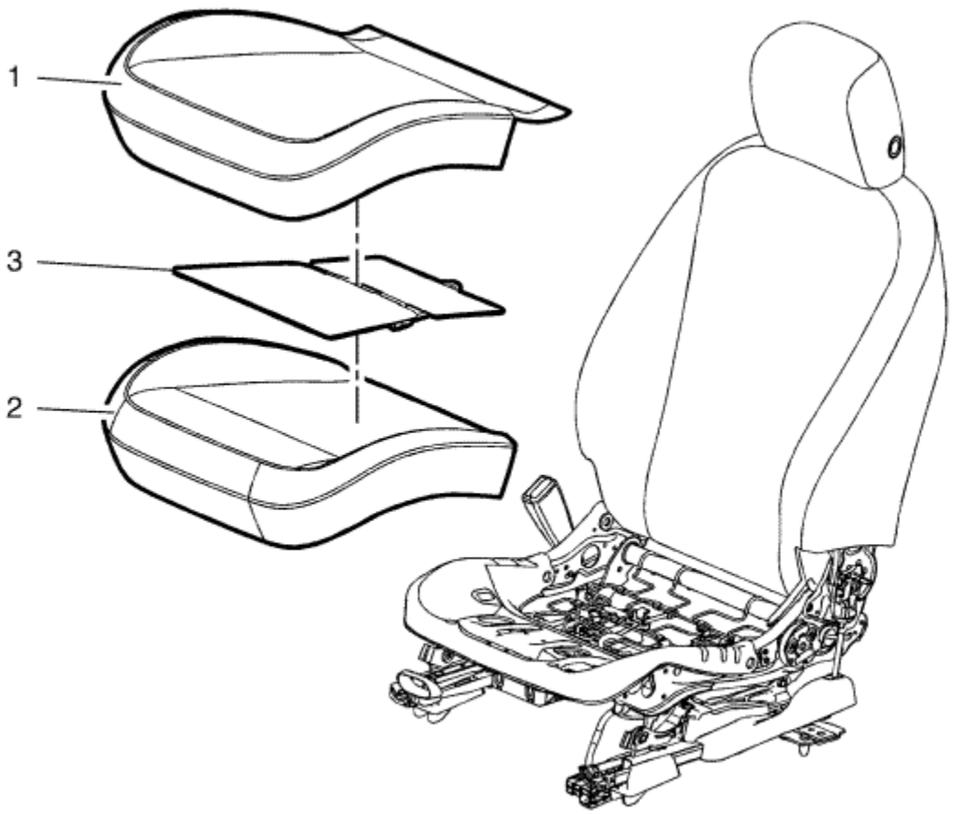

Callout	Component Name

Warning: Refer to SIR Warning in the Preface section.

Preliminary Procedure

1. Remove the driver seat. Refer to Driver or Passenger Seat Replacement .

2. Remove the driver seat cushion cover and pad. Refer to Front Seat Cushion Cover and Pad Replacement .

1	Driver Seat Cushion Cover **Procedure** Separate the seat cushion cover from the seat cushion pad by pulling the cover away from the pad.
2	Driver Seat Cushion Pad
3	Driver Seat Cushion Heater **Procedure** 1. The heater is retained to the pad with adhesive, carefully peel the heater from the seat cushion to remove. 2. Note the routing of the wiring harness and connector location for installation.

© Copyright Chevrolet. All rights reserved

Passenger Seat Cushion Heater Replacement

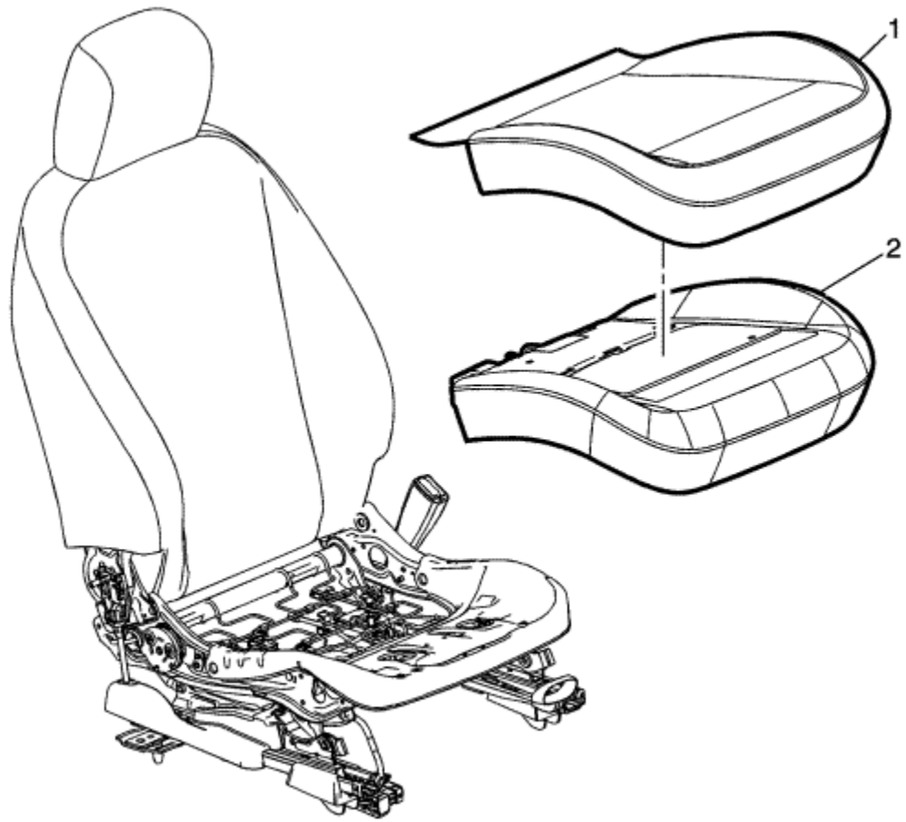

Callout	Component Name

Warning: Refer to SIR Warning in the Preface section.

Preliminary Procedure

1. Remove the passenger seat. Refer to Driver or Passenger Seat Replacement

2. Remove the passenger seat cushion cover and pad. Refer to Front Seat Cushion Cover and Pad Replacement

1	Passenger Seat Cushion Cover **Procedure** Separate the seat cushion cover from the seat cushion pad by pulling the cover away from the pad.
2	Passenger Seat Cushion Heater Assembly **Procedure** The heater and seat cushion pad must be replaced as a unit. **Tip** Note the routing of the wiring harness and connector location for installation.

© Copyright Chevrolet. All rights reserved

Heated Seats Description and Operation

Heated Seat Components

The driver and passenger heated seats consist of the following components:

- Left heated seat switch
- Right heated seat switch
- HVAC control
- Seat heating control module
- Driver seat cushion heating element
- Driver seat backrest heating element
- Driver seat cushion temperature sensor
- Passenger seat cushion heating element
- Passenger seat backrest heating element
- Passenger seat cushion temperature sensor

Power and Ground

Battery positive voltage is supplied at all times to the seat heating control module through a 30 A fuse located in the underbonnet fuse block. This voltage is used by the module to supply power to the seat heating elements. Ground for the module is provided at G307.

Heated Seat Operation

The driver and passenger heated seats are controlled by a single seat heating control module that is located under the driver seat cushion. Both heated seats are controlled by separate heated seat switches that are located in the HVAC control. When a heated seat switch is pressed, a serial data message is sent from the HVAC control to the HVAC control module indicating the heated seat command. The HVAC control module serves as a gateway to transmit the message to the heated seat control module via the serial data line. In response to this signal, the seat heating control module applies battery positive voltage through the element supply voltage circuit to the appropriate seat heating elements. The seat heating control module then sends a serial data message back to the HVAC control module to gateway the information to the HVAC control to either illuminate or turn off the appropriate temperature indicator.

Temperature Regulation

When the engine is ON, the heated seats will initialise in the OFF state. With each activation of the heated seat switch, the seat heating control module will cycle the temperature setting in the following manner: HIGH, MEDIUM, LOW, and OFF.

The seat heating control module monitors the seat temperature through the temperature sensor signal circuit and the temperature sensor (thermistor) that is located in the seat cushion. The temperature sensor is a variable resistor, it's resistance changes as the temperature of the seat changes. When the temperature sensor resistance indicates to the seat heating control module that the seat has reached the desired temperature, the module opens the ground path of the seat heating elements through the heated seat element control circuit. The module will then cycle the element control circuit open and closed in order to maintain the desired temperature.

&#169© Copyright Chevrolet. All rights reserved

Fastener Tightening Specifications

Application	Specification	
	Metric	English
Power Steering Assist Motor Bolt	8 N·m	71 lb in
Steering Gear Bolt (1)		
First Pass	110 N·m	81 lb ft
Final Pass	160 degrees	
Steering Linkage Inner Tie Rod	100 N·m	74 lb ft
Steering Linkage Outer Tie Rod Nut (2)	35 N·m	26 lb ft

1. Use a NEW bolt.
2. Use a NEW nut.

© Copyright Chevrolet. All rights reserved

Power Steering Schematics

Power Steering

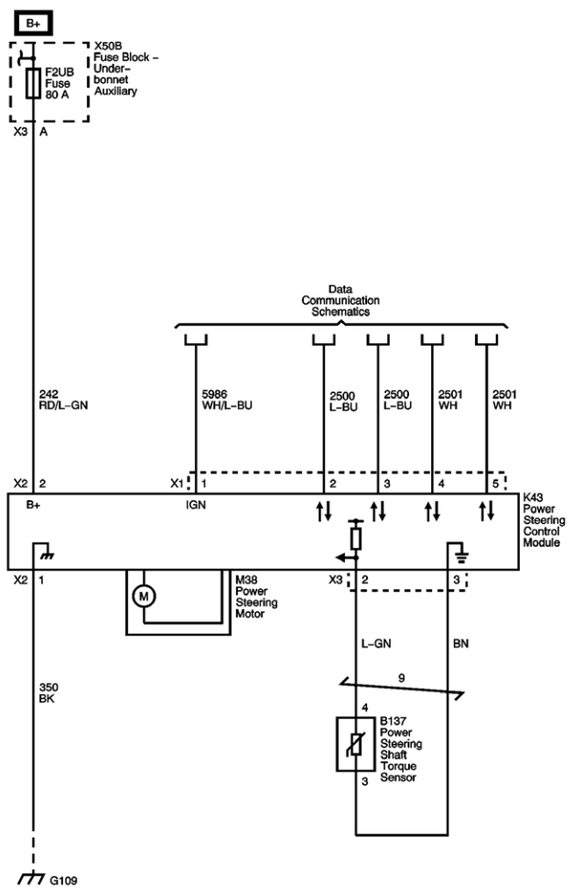

Master Electrical Component List

Power Steering System Description and Operation Electronic Power Steering

X50D Fuse Block - Battery and X50B Fuse Block - Underhood Auxiliary Bussing

Data Communication Schematics

Master Electrical Schematic Icons

G106, G109, G110, G112, G113 and G117

© Copyright Chevrolet. All rights reserved

DTC C0176

Diagnostic Instructions

- Perform the Diagnostic System Check - Vehicle prior to using this diagnostic procedure.
- Review Strategy Based Diagnosis for an overview of the diagnostic approach.
- Diagnostic Procedure Instructions provides an overview of each diagnostic category.

DTC Descriptor

DTC C0176 54: Control Module Temperature Sensor High Temperature

Circuit/System Description

The power steering control module monitors the temperature of the Power Steering System. The power steering control module uses voltage, current levels and input from an internal temperature sensor to calculate an estimated system temperature. If the power steering control module detects a high system temperature event is occurring, the amount of assist is decreased to reduce system temperature, in effort to prevent thermal damage to the power steering components.

Conditions for Running the DTC

- Vehicle ON.
- Power steering system voltage is 9-16 volts.
- Repetitive steering input applied.

Conditions for Setting the DTC

The power steering control module detects a high system temperature.

Action Taken When the DTC Sets

- DTC C0176 54 is stored in memory.
- Steering assist is reduced.

Conditions for Clearing the DTC

- A current DTC will clear on the next malfunction free ignition cycle.
- A history DTC will clear after 40 consecutive malfunction free ignition cycles.

Diagnostic Aids

- DTC C0176 54 does not indicate that a malfunction has occurred. Rather that the power steering control module had to limit current to the power steering motor to avoid thermal damage to the power steering system components. Discuss with the customer about driving conditions when the steering assist was reduced.
- Ensure that no steering components down stream of the power steering column assembly, such as ball joints, track rod ends, universal joints, or the steering gear assembly, are mechanically binding.

Reference Information

Schematic Reference

Power Steering Schematics

Connector End View Reference

Component Connector End Views

Description and Operation

Power Steering System Description and Operation : Electronic Power Steering

Electrical Information Reference

- Circuit Testing
- Connector Repairs
- Testing for Intermittent Conditions and Poor Connections
- Wiring Repairs

Scan Tool Reference

Control Module References for scan tool information

Circuit/System Verification

1. Verify that the DTC sets outside of the conditions for running and setting. Since most occurrences of this DTC are caused by excessive driver inputs, review with the customer the conditions under which the DTC set.
   If the DTC set within the normal conditions for running and setting, the power steering is operating as designed.
2. Operate the vehicle within the conditions that the customer experienced, avoiding excessive inputs, and verify the DTC does not reset.
   If the DTC resets, replace the K43 Power Steering Control Module.

Repair Instructions

Perform the Diagnostic Repair Verification after completing the diagnostic procedure.

- Steering Gear Replacement
- Power Steering Assist Motor Replacement for power steering control module replacement
- Control Module References for power steering control module programming and setup

&#169© Copyright Chevrolet. All rights reserved

DTC C044A

Diagnostic Instructions

- Perform the Diagnostic System Check - Vehicle prior to using this diagnostic procedure.
- Review Strategy Based Diagnosis for an overview of the diagnostic approach.
- Diagnostic Procedure Instructions provides an overview of each diagnostic category.

DTC Descriptor

DTC C044A 71: Steering System Engine Speed Signal Circuit Invalid Data

Circuit/System Description

The power steering control module receives the engine speed signal from the engine control module.

Conditions for Running the DTC

The ignition is ON.

Conditions for Setting the DTC

The power steering control module detects a invalid engine speed signal on the CAN Bus.

Action Taken When the DTC Sets

- DTC C044A is stored in memory.
- The driver information centre displays the SERVICE POWER STEERING warning message.

Conditions for Clearing the DTC

- A current DTC will clear on the next malfunction-free ignition cycle.

- A history DTC will clear after 40 consecutive malfunction-free ignition cycles.

Reference Information

Schematic Reference

Power Steering Schematics

Connector End View Reference

Component Connector End Views

Description and Operation

Power Steering System Description and Operation : Electronic Power Steering

Electrical Information Reference

- Circuit Testing
- Connector Repairs
- Testing for Intermittent Conditions and Poor Connections
- Wiring Repairs

Scan Tool Reference

Control Module References for scan tool information

Circuit/System Verification

Verify that DTC C044A 71 is not set.

If the DTC is set, replace the K43 Power Steering Control Module.

Repair Instructions

Perform the Diagnostic Repair Verification after completing the diagnostic procedure.

- Steering Gear Replacement
- Control Module References for power steering control module replacement, setup, and programming

&#169© Copyright Chevrolet. All rights reserved

DTC C0456

Diagnostic Instructions

- Perform the Diagnostic System Check - Vehicle prior to using this diagnostic procedure.
- Review Strategy Based Diagnosis for an overview of the diagnostic approach.
- Diagnostic Procedure Instructions provides an overview of each diagnostic category.

DTC Descriptor

DTC C0456 4B: Steering Position Sensor Calibration not Learned

Circuit/System Description

If the power steering control module is replaced, the calibration needs to be learned to the new power steering control module using a scan tool.

Conditions for Running the DTC

The ignition is ON.

Conditions for Setting the DTC

The calibration is not learned to the new power steering control module.

Action Taken When the DTC Sets

- DTC C0456 is stored in memory.
- The driver information centre displays the SERVICE POWER STEERING warning message.
- No steering assist.

Conditions for Clearing the DTC

The scan tool function Steering Angle Sensor Centring procedure must be completed successfully.

Reference Information

Schematic Reference

Power Steering Schematics

Connector End View Reference

Component Connector End Views

Description and Operation

Power Steering System Description and Operation : Electronic Power Steering

Electrical Information Reference

- Circuit Testing
- Connector Repairs
- Testing for Intermittent Conditions and Poor Connections
- Wiring Repairs

Scan Tool Reference

Control Module References for scan tool information

Circuit/System Verification

1. With a scan tool, verify that DTC C0456 4B is not set.
   If the DTC is set, calibrate the steering position sensor and verify the DTC does not reset. Refer to Power Steering Control Module Calibration .
2. If the DTC resets, replace the steering gear.

Repair Instructions

Perform the Diagnostic Repair Verification after completing the diagnostic procedure.

- Steering Gear Replacement
- Power Steering Assist Motor Replacement for power steering control module replacement

- Control Module References for power steering control module programming and setup

&#169© Copyright Chevrolet. All rights reserved

DTC C0475

Diagnostic Instructions

- Perform the Diagnostic System Check - Vehicle prior to using this diagnostic procedure.
- Review Strategy Based Diagnosis for an overview of the diagnostic approach.
- Diagnostic Procedure Instructions provides an overview of each diagnostic category.

DTC Descriptor

DTC C0475 00: Electric Steering Motor Circuit Malfunction

DTC C0475 59: Electric Steering Motor Circuit Protection Time-Out

Circuit/System Description

C0475 00

The power steering control module continuously monitors the voltage and current levels being commanded to the 3-phase steering motor. The power steering control module compares the desired and actual current levels to detect malfunctions in the power steering motor, or the circuits to the motor.

C0475 59

The power steering control module continuously monitors the thermal cycle counter of the steering gear. If the thermal cycle counter exceeds the maximum allowable limit, the steering gear has reached its end of life and must be replaced.

Conditions for Running the DTC

The ignition is ON.

Conditions for Setting the DTC

C0475 00

The power steering control module detects a short to ground, short to voltage, or an open/high resistance on any of the internal motor circuits.

C0475 59

The power steering control module detects the thermal cycle counter has exceeded the maximum allowable limit and the whole steering gear system must be replaced.

Action Taken When the DTC Sets

- The DTC is stored in memory.
- The driver information centre displays the SERVICE POWER STEERING warning message.
- No steering assist.

Conditions for Clearing the DTC

C0475 00

- A current DTC will clear on the next malfunction-free ignition cycle.
- A history DTC will clear after 40 consecutive malfunction-free ignition cycles.

C0475 59

This DTC cannot be cleared.

Reference Information

Schematic Reference

Power Steering Schematics

Connector End View Reference

Component Connector End Views

Description and Operation

Power Steering System Description and Operation : Electronic Power Steering

Electrical Information Reference

- Circuit Testing
- Connector Repairs
- Testing for Intermittent Conditions and Poor Connections
- Wiring Repairs

Scan Tool Reference

Control Module References for scan tool information

Circuit/System Verification

C0475 00

1. Vehicle OFF, disconnect the X1 harness connector at the K43 power steering control module.
2. Test for less than 1 Ω between the ground circuit terminal 1 and ground.
   If greater than the specified range, test the ground circuit for an open/high resistance.
3. Vehicle in Service Mode, verify that a test lamp illuminates between the B+ circuit terminal 2 and earth.
   If the test lamp does not illuminate, test the B+ circuit for a short to ground or an open/high resistance.
4. If all circuits test normal, replace the K43 power steering control module.

C0475 59

Verify that DTC C0475 59 is not set.

If the DTC is set, replace the K43 power steering control module.

Repair Instructions

Perform the Diagnostic Repair Verification after completing the diagnostic procedure.

- Steering Gear Replacement
- Control Module References for power steering control module replacement, programming and setup

&#169© Copyright Chevrolet. All rights reserved

DTC C047A

Diagnostic Instructions

- Perform the Diagnostic System Check - Vehicle prior to using this diagnostic procedure.
- Review Strategy Based Diagnosis for an overview of the diagnostic approach.
- Diagnostic Procedure Instructions provides an overview of each diagnostic category.

DTC Descriptor

DTC C047A: Electric Steering Motor Position Sensor Circuit Malfunction

Circuit/System Description

The power steering control module continuously monitors the motor position sensor voltage signals. The voltage signals of the motor position sensor and the digital torque sensor index current signal are both processed by the power steering control module to detect and calculate the steering wheel angle.

Conditions for Running the DTC

The ignition is ON.

Conditions for Setting the DTC

The power steering control module detects a short to ground, short to voltage, or an open/high resistance on any of the internal motor position sensor circuits.

Action Taken When the DTC Sets

- No steering assist.
- The driver information centre displays the SERVICE POWER STEERING warning message.

Conditions for Clearing the DTC

- A current DTC will clear on the next malfunction-free ignition cycle.
- A history DTC will clear after 40 consecutive malfunction-free ignition cycles.

Reference Information

Schematic Reference

Power Steering Schematics

Connector End View Reference

Component Connector End Views

Description and Operation

Power Steering System Description and Operation : Electronic Power Steering

Electrical Information Reference

- Circuit Testing
- Connector Repairs
- Testing for Intermittent Conditions and Poor Connections
- Wiring Repairs

Scan Tool Reference

Control Module References for scan tool information

Circuit/System Verification

1. With a scan tool verify that DTC C047A is not set.
   If the DTC is set
   Refer to Circuit/System Testing below.
   If the DTC is not set
2. All OK.

Circuit/System Testing

1. With a scan tool perform the Power Steering Control Module Calibration procedure Steering Angle Sensor Centring and Software Endstop Learning.

2. Verify that DTC C047A does not set.
   If the DTC does set
   Replace the K43 Power Steering Control Module.
   If the DTC does not set
3. All OK.

Repair Instructions

Perform the Diagnostic Repair Verification after completing repair procedures.

- Steering Gear Replacement
- Control Module References for power steering control module replacement, programming and setup

&#169© Copyright Chevrolet. All rights reserved

DTC C0545

Diagnostic Instructions

- Perform the Diagnostic System Check - Vehicle prior to using this diagnostic procedure.
- Review Strategy Based Diagnosis for an overview of the diagnostic approach.
- Diagnostic Procedure Instructions provides an overview of each diagnostic category.

DTC Descriptor

DTC C0545 00: Steering Wheel Torque Sensor Malfunction

Circuit/System Description

The power steering control module continuously monitors the digital torque sensor's torque and index current signals. As the steering wheel is turned and torsional twist is applied to the steering shaft, the steering input and output shafts are monitored via the torque signal circuit and then processed by the power steering control module to calculate the steering torque.

Conditions for Running the DTC

The ignition is ON.

Conditions for Setting the DTC

The power steering control module detects a short to ground, short to voltage, or an open/high resistance on any of the internal motor position sensor circuits.

Action Taken When the DTC Sets

- DTC C0545 is stored in memory.
- The driver information centre displays the SERVICE POWER STEERING warning message.
- No steering assist.

Conditions for Clearing the DTC

- A current DTC will clear on the next malfunction-free ignition cycle.
- A history DTC will clear after 40 consecutive malfunction-free ignition cycles.

Reference Information

Schematic Reference

Power Steering Schematics

Connector End View Reference

Component Connector End Views

Description and Operation

Power Steering System Description and Operation : Electronic Power Steering

Electrical Information Reference

- Circuit Testing
- Connector Repairs
- Testing for Intermittent Conditions and Poor Connections
- Wiring Repairs

Scan Tool Reference

Control Module References for scan tool information

Circuit/System Verification

Verify that DTC C0545 00 is not set.

If the DTC is set, replace the steering gear.

Repair Instructions

Perform the Diagnostic Repair Verification after completing the diagnostic procedure.

- Steering Gear Replacement
- Control Module References for power steering control module replacement, setup and programming

&#169© Copyright Chevrolet. All rights reserved

DTC C0565

Diagnostic Instructions

- Perform the Diagnostic System Check - Vehicle prior to using this diagnostic procedure.
- Review Strategy Based Diagnosis for an overview of the diagnostic approach.
- Diagnostic Procedure Instructions provides an overview of each diagnostic category.

DTC Descriptor

DTC C0565 5A: Vehicle Identification Number Not Plausible

Circuit/System Description

The vehicle identification number (VIN) is programmed into the power steering control module during initial programming of the module.

Conditions for Running the DTC

Vehicle in Service Mode

Conditions for Setting the DTC

The power steering control module is not properly programmed.

Action Taken When the DTC Sets

- DTC C0565 is stored in memory.
- The driver information centre displays the SERVICE POWER STEERING warning message.

Conditions for Clearing the DTC

- A current DTC will clear on the next malfunction-free ignition cycle.

- A history DTC will clear after 40 consecutive malfunction-free ignition cycles.

Diagnostic Aids

A newly replaced power steering control module can set one or more DTC on its initial Vehicle in Service Mode cycle.

Reference Information

Schematic Reference

Power Steering Schematics

Connector End View Reference

Component Connector End Views

Description and Operation

Power Steering System Description and Operation : Electronic Power Steering

Electrical Information Reference

- Circuit Testing
- Connector Repairs
- Testing for Intermittent Conditions and Poor Connections
- Wiring Repairs

Scan Tool Reference

Control Module References for scan tool information

Circuit/System Verification

1. Verify that DTC C0565 is not present.
   If the DTC is present, program the K43 power steering control module and verify the DTC does not reset.
2. If the DTC resets, replace the K43 power steering control module.

Repair Instructions

Perform the Diagnostic Repair Verification after completing the diagnostic procedure.

- Steering Gear Replacement
- Control Module References for power steering control module replacement, programming and setup

&#169© Copyright Chevrolet. All rights reserved

DTC C0569

Diagnostic Instructions

- Perform the Diagnostic System Check - Vehicle prior to using this diagnostic procedure.
- Review Strategy Based Diagnosis for an overview of the diagnostic approach.
- Diagnostic Procedure Instructions provides an overview of each diagnostic category.

DTC Descriptor

DTC C0569 3A: System Configuration Incorrect Component Installed

Circuit/System Description

The power steering control module continuously monitors the thermal cycle counter of the steering gear. If the power steering control module is replaced, the stored information in the existing power steering control module must be transferred over to the new power steering control module using the Power Steering Control Module Programming and Setup Procedure.

Conditions for Running the DTC

The ignition is ON.

Conditions for Setting the DTC

The calibration is not learned to the new power steering control module.

Action Taken When the DTC Sets

- DTC C0569 is stored in memory.
- The driver information centre displays the SERVICE POWER STEERING warning message.
- No Steering assist.

Conditions for Clearing the DTC

- A current DTC will clear on the next malfunction free ignition cycle.
- A history DTC will clear after 40 consecutive malfunction free ignition cycles.

Reference Information

Schematic Reference

Power Steering Schematics

Connector End View Reference

Component Connector End Views

Description and Operation

Power Steering System Description and Operation : Electronic Power Steering

Electrical Information Reference

- Circuit Testing
- Connector Repairs
- Testing for Intermittent Conditions and Poor Connections
- Wiring Repairs

Scan Tool Reference

Control Module References for scan tool information

Circuit/System Verification

1. Ignition ON.
2. With a scan tool verify that DTC C0569 3A is not set.
   If the DTC is set
   Refer to Circuit/System Testing below.
   If the DTC is not set.
3. All OK.

Circuit/System Testing

1. With a scan tool complete the power steering control module programming and setup procedure.
2. Verify that the DTC C0569 3A does not reset.
   If the DTC resets
   Replace the steering gear.
   If the DTC does not reset
3. All OK.

Repair Instructions

Perform the Diagnostic Repair Verification after completing repair procedures.

- Steering Gear Replacement
- Control Module References for power steering control module replacement, programming and setup

&#169© Copyright Chevrolet. All rights reserved

DTC C0710

Diagnostic Instructions

- Perform the Diagnostic System Check - Vehicle prior to using this diagnostic procedure.
- Review Strategy Based Diagnosis for an overview of the diagnostic approach.
- Diagnostic Procedure Instructions provides an overview of each diagnostic category.

DTC Descriptor

DTC C0710 71: Steering Position Signal Invalid Data

Diagnostic Fault Information

Circuit	Short to Ground	Open/High Resistance	Short to Voltage	Signal Performance
CAN Bus High Serial Data	U0073, U0100, U0101, U0125, U0126, U0140	U0073, U0100, U0101, U0125, U0126, U0140	U0073, U0100, U0101, U0125, U0126, U0140	C0710 5A, C0710 71
CAN Bus Low Serial Data	U0073, U0100, U0101, U0125, U0126, U0140	U0073, U0100, U0101, U0125, U0126, U0140	U0073, U0100, U0101, U0125, U0126, U0140	C0710 5A, C0710 71

Circuit/System Description

The power steering control module monitors the steering angle sensor signal via the GMLAN serial data circuit. The power steering control module utilizes this signal to determine a center point for Active Return and Soft End Stops. Upon detecting an invalid steering angle sensor signal, the power steering control module will disable Active Return and Soft End Stops, then set a DTC.

Note: To most drivers the loss of Active Return and Soft End Stops may not be noticeable as there is no visual indicator activated on the instrument cluster or driver information display.

There is no cause that can be diagnosed with the power steering control module when this DTC is set, DO NOT REPLACE POWER STEERING CONTROL MODULE OR STEERING GEAR DUE TO THIS DTC.

For diagnosis of an invalid steering angle sensor signal, refer to Antilock Brake System Diagnostic Information and Procedures.

Conditions for Running the DTC

Ignition ON

Conditions for Setting the DTC

The power steering control module has received on of the following serial data messages listed below from the external steering angle sensor.

- Steering angle range is exceeded
- Steering angle sensor is not calibrated
- Steering angle sensor is initialized
- Steering angle sensor message: Roll Counter is INVALID
- Steering angle sensor message: Present Bit is FALSE (not common)
- Steering angle sensor message: Error Flag is set to TRUE

Action Taken When the DTC Sets

- The electronic brake control module disables the stability control for the duration of the ignition cycle.
- Active Return and Software End Stops are deactivated.

Conditions for Clearing the DTC

- A current DTC clears when the diagnostic runs and passes.
- When the steering angle sensor signal becomes valid, the fault will set to History and can be cleared with a scan tool.

Diagnostic Aids

The car should not pull in either direction causing the steering wheel to be OFF center while driving straight ahead on a level surface.

Reference Information

Schematic Reference

Antilock Brake System Schematics

Connector End View Reference

Component Connector End Views

Description and Operation

ABS Description and Operation

Electrical Information Reference

- Circuit Testing
- Connector Repairs
- Testing for Intermittent Conditions and Poor Connections
- Wiring Repairs

Scan Tool Reference

Control Module References for scan tool information

Circuit/System Verification

1. Ignition ON.
2. With a scan tool, verify that DTC C0710 71 is not set.
   If DTC C0710 71 is set
   Refer to DTC C0710 in Antilock Brake System Diagnostic Information and Procedures.
   If DTC C0710 71 is not set
3. All OK.

&#169© Copyright Chevrolet. All rights reserved

Rattle, Clunk, or Shudder Noise from the Power Steering System

Step	Action	Yes	No
1	Review the system description and operation in order to familiarize yourself with the system functions. Did you review the Power Steering System Description and Operation?	Go to Step 2	Go to Power Steering System Description and Operation : Electronic Power Steering
2	1. Inspect the easily accessible or visible system components for obvious damage or conditions which could cause the symptom. 2. Inspect for aftermarket devices which could affect the operation of the power steering system. 3. Verify that a rattle, clunk or shudder noise is present. Is a rattle, clunk or shudder noise present?	Go to Step 3	System OK
3	Inspect the power steering gear for the proper installation. Refer to Steering Gear Replacement . Is the power steering gear installation incorrect?	Go to Step 6	Go to Step 4
4	Inspect the intermediate shaft. Is the intermediate shaft worn?	Go to Step 8	Go to Step 5
5	Inspect the suspension. Is the suspension worn?	Go to Step 7	—
6	Install the power steering gear correctly. Refer to Steering Gear Replacement . Did you complete the repair?	Go to Step 9	—
7	Replace the worn suspension components. Did you complete the repair?	Go to Step 9	—
8	Replace the intermediate shaft. Refer to Intermediate Steering Shaft Replacement . Did you complete the repair?	Go to Step 9	—
	Operate the system in order to verify the repair.		

9	Did you correct the condition?	System OK	Go to Step 3

© Copyright Chevrolet. All rights reserved

Steering Linkage Outer Track rod Replacement

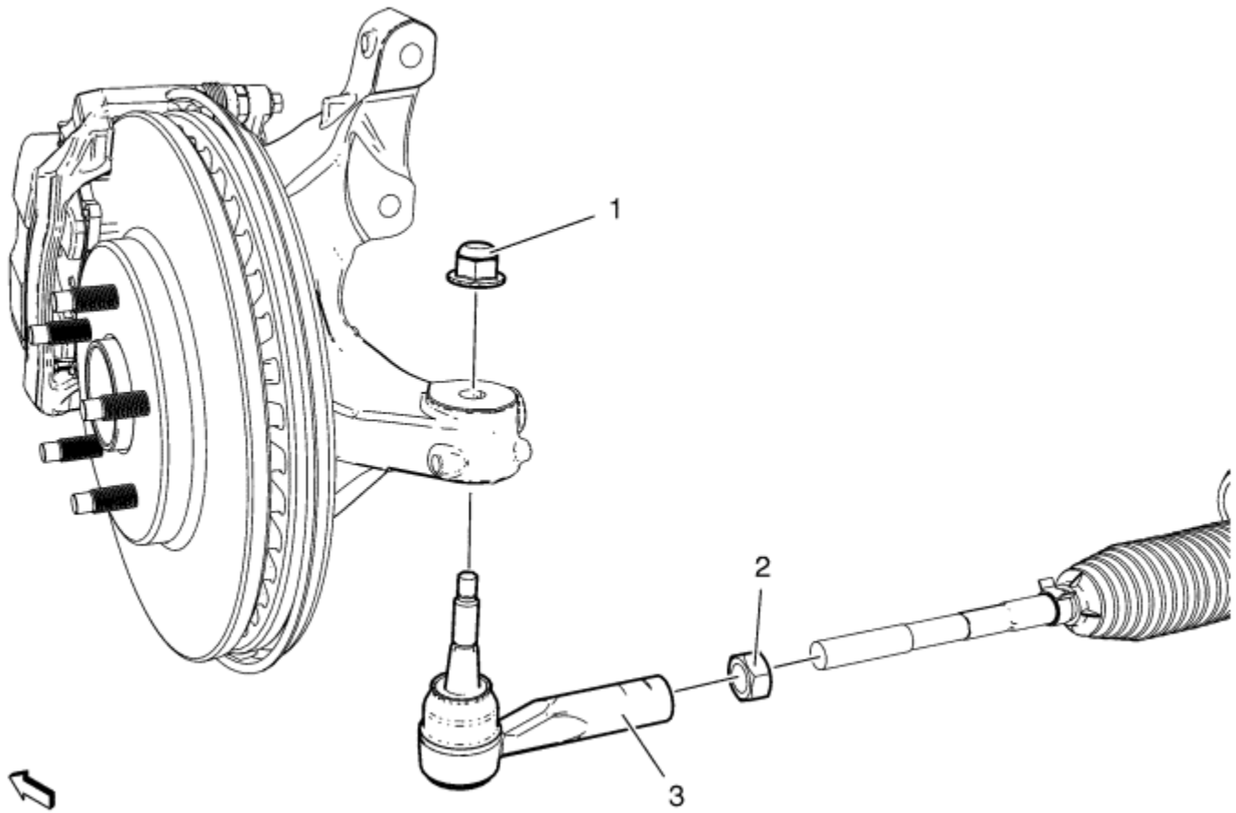

Callout	Component Name
Preliminary Procedures 1. Raise and support the vehicle. Refer to Lifting and Jacking the Vehicle . 2. Remove the front tyre and wheel assembly. Refer to Tyre and Wheel Removal and Installation .	

1	Steering Linkage Outer Tie Rod Nut **Caution:** Refer to Fastener Caution in the Preface section. **Procedure** 1. Remove the steering linkage outer track rod nut. Discard the nut. 2. Install a NEW steering linkage outer track rod nut. **Tighten** 35 N·m (26 lb ft)
2	Steering Linkage Inner Track rod Nut **Procedure** 1. Use paint in order to place match marks on the steering linkage inner track rod nut and on the steering linkage inner track rod. 2. During installation, align the match marks. 3. Do not tighten the nut during installation. Tighten the nut after adjusting the front toe. Refer to Wheel Alignment - Steering Wheel Angle and/or Front Toe Adjustment .
3	Steering Linkage Outer Track rod **Caution:** Do not free the ball stud by using a pickle fork or a wedge-type tool. Damage to the seal or bushing may result. **Procedure** 1. Use the *CH-24319-B* puller in order to separate the steering linkage outer tie rod from the steering knuckle. 2. Inspect the steering linkage inner track rod for bent or damaged threads. 3. Clean the tapered surface of the steering knuckle. 4. After installation, measure and adjust the front toe. Refer to Wheel Alignment - Steering Wheel Angle and/or Front Toe Adjustment . 5. Centre the steering angle sensor. Refer to Steering Angle Sensor Centreing . **Special Tools** *CH-24319-B* Steering Linkage and Track Rod Puller For equivalent regional tools, refer to Special Tools .

© Copyright Chevrolet. All rights reserved

Steering Gear Boot Replacement

Special Tools

CH-22610 Keystone Clamp Pliers

For equivalent regional tools, refer to Special Tools .

Removal Procedure

1. Raise and support the vehicle. Refer to Lifting and Jacking the Vehicle .
2. Remove the steering linkage outer track rod. Refer to Steering Linkage Outer Track rod Replacement .
3. Remove the steering linkage inner track rod nut.

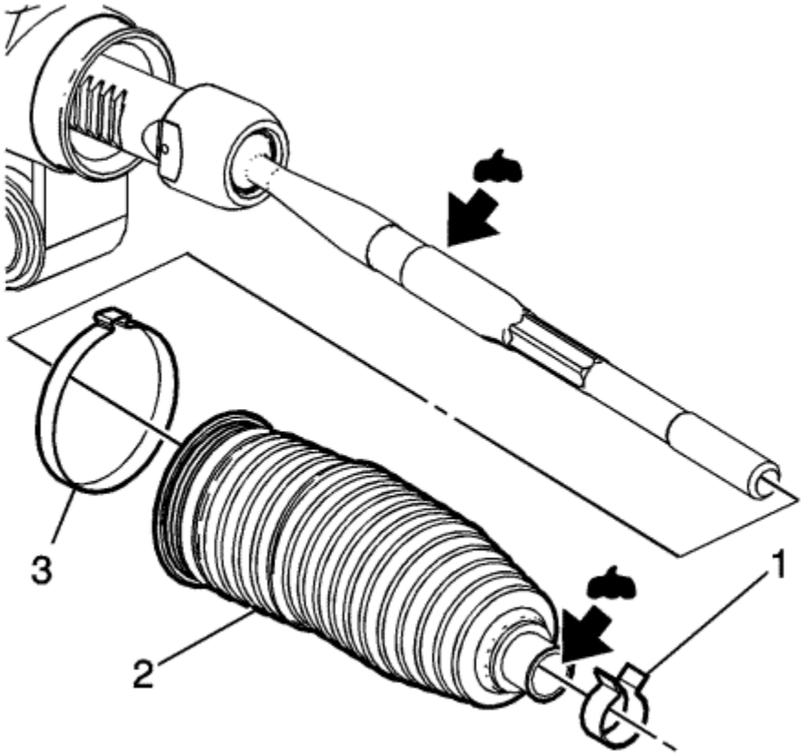

4. Remove the outer boot clamp (1).

   Discard the clamp.

5. Cut the inner boot clamp (3).

   Discard the clamp.

6. Remove the steering gear boot (2).
7. Clean the steering linkage inner tie rod and the steering gear boot contact area of any lubricant or debris.

Installation Procedure

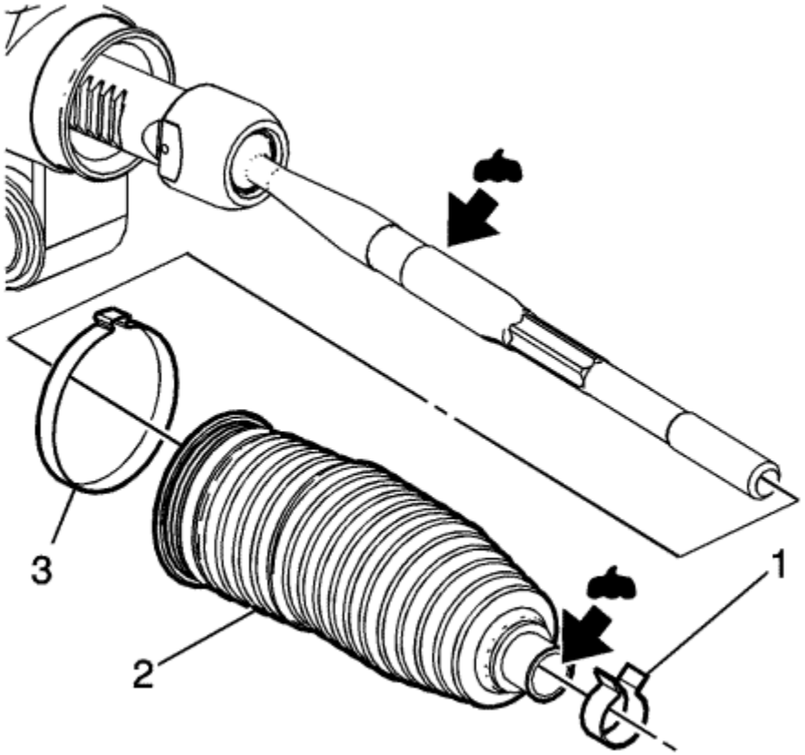

Note:

- The steering linkage inner tie rod and the steering gear boot must be free from moisture and debris.
- Ensure that the larger end of the steering gear boot is firmly seated in the correct location on the steering gear.

1. Install the steering gear boot with the NEW inner boot clamp (3) loosely attached.

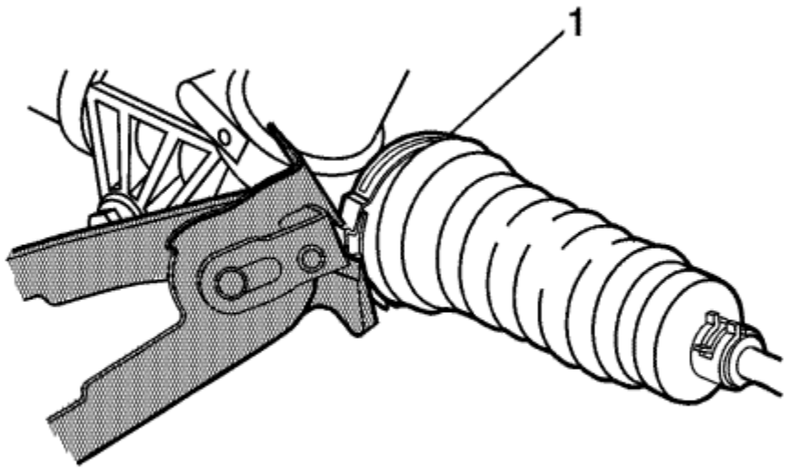

2. Use the *CH-22610* pliers in order to install the NEW inner boot clamp (1).

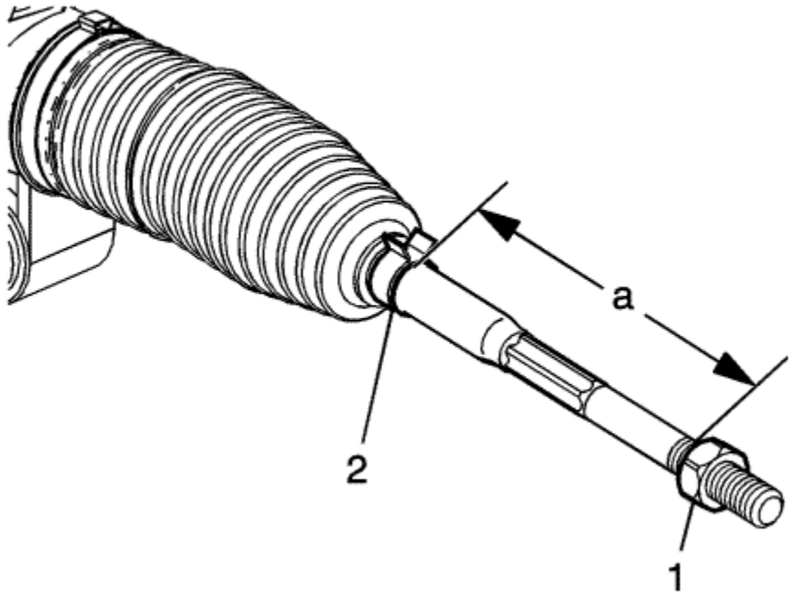

Note: Ensure that the small end of the steering gear boot is firmly seated in the correct location on the steering linkage inner tie rod.

3. Install the NEW outer boot clamp (2).
4. Install the steering linkage inner track rod nut (1).
5. Install the steering linkage outer track rod. Refer to Steering Linkage Outer Track rod Replacement .
6. Measure and adjust the front toe. Refer to Wheel Alignment - Steering Wheel Angle and/or Front Toe Adjustment .
7. Lower the vehicle.

&#169© Copyright Chevrolet. All rights reserved

Steering Gear Replacement

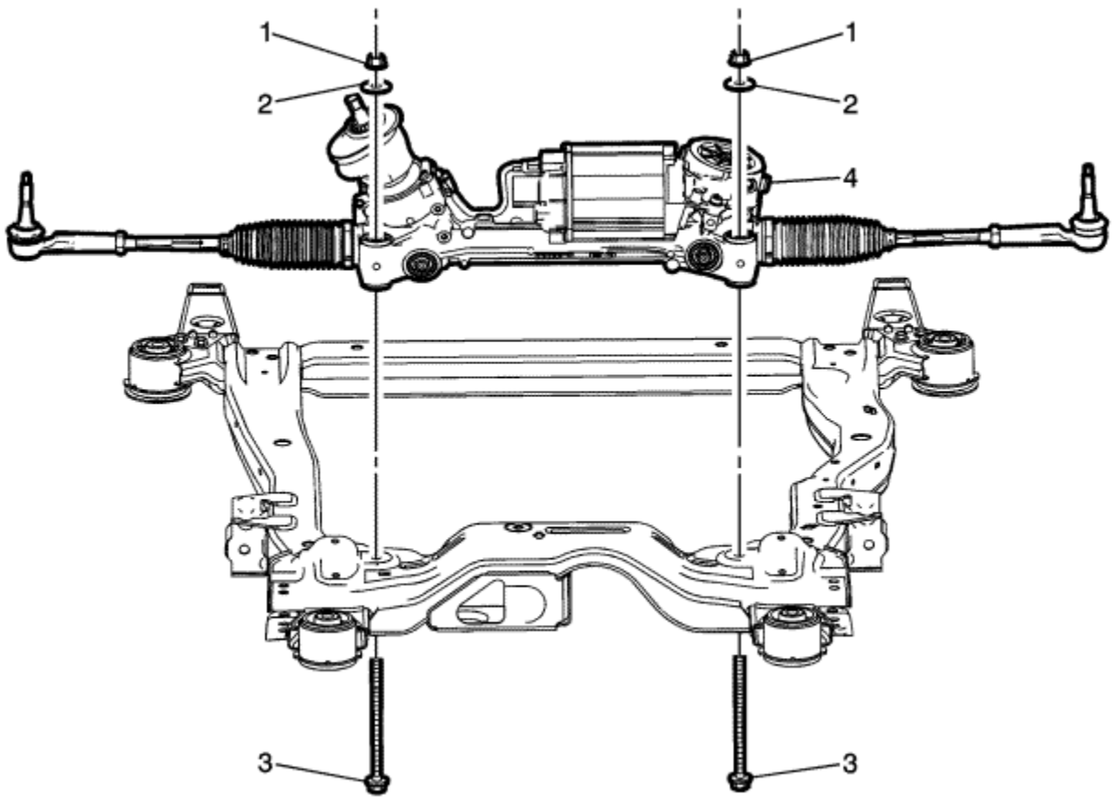

Callout	Component Name
Caution: Electrostatic discharge (ESD) can damage many solid-state electrical components. ESD-susceptible components may or may not be labelled with the ESD- symbol. Handle all electrical components carefully. Use the following precautions in order to avoid ESD damage: • Touch a metal ground point in order to discharge your body's static charge before servicing any electronic component; especially after sliding across the vehicle seat. • Do not touch exposed terminals. Terminals may connect to circuits susceptible to ESD damage. • Do not allow tools to contact exposed terminals when servicing connectors.	

- Do not remove components from their protective packaging until required to do so.
- Avoid the following actions unless required by the diagnostic procedure:
  - Jumpering or grounding of the components or connectors.
  - Connecting test equipment probes to components or connectors. Connect the ground lead first when using test probes.
- Ground the protective packaging of any component before opening. Do not rest solid-state components on metal workbenches, or on top of TVs, radios, or other electrical devices.

Caution: With wheels of the vehicle facing straight ahead, secure the steering wheel utilising steering column anti-rotation pin, steering column lock, or a strap to prevent rotation. Locking of the steering column will prevent damage and a possible malfunction of the SIR system. The steering wheel must be secured in position before disconnecting the following components:

- The steering column
- The intermediate shaft(s)
- The steering gear

After disconnecting these components, do not rotate the steering wheel or move the front tires and wheels. Failure to follow this procedure may cause the SIR coil assembly to become un-centered and cause possible damage to the SIR coil. If you think the SIR coil has became un-centered, refer to your specific SIR coil's centering procedure to re-center SIR Coil.

Preliminary Procedures

1. With the front wheels in the straight ahead position, pull the driver's seatbelt between the spokes on the steering wheel and buckle the seatbelt in order to lock the steering column.
2. Raise and support the vehicle. Refer to Lifting and Jacking the Vehicle .
3. Disconnect the outer tie rods from the steering knuckles. Refer to Steering Linkage Outer Track rod Replacement .
4. Disconnect the intermediate steering shaft from the steering gear. Refer to Intermediate Steering Shaft Replacement .
5. Disconnect the steering column dash seal from the dash panel.
6. Lower the drivetrain and front suspension frame in order to gain clearance for the steering gear. Refer to Drivetrain and Front Suspension Frame Replacement .
7. Disconnect the front stabiliser shaft insulator clamps from the frame and reposition the shaft in order to gain clearance for the steering gear. Refer to Stabiliser Shaft Replacement .

1	Steering Gear Nut (Qty: 2) **Caution:** Refer to Fastener Caution in the Preface section. **Procedure** 1. Remove the 2 steering gear nuts. 2. Install 2 steering gear nuts. Hold the steering gear nuts while tightening the steering gear bolts.

2	Steering Gear Washer (Qty: 2)
3	Steering Gear Bolt (Qty: 2) **Warning:** This component is equipped with torque-to-yield fasteners. Install a NEW torque-to-yield fastener when installing this component. Failure to replace the torque-to-yield fastener could cause bodily injury and damage to the vehicle or component. **Procedure** 1. Remove the 2 steering gear bolts. Discard the bolts. 2. Install 2 NEW steering gear bolts. Hold the steering gear nuts while tightening the steering gear bolts using the *EN-45059* meter . **Tighten** 1. 110 N·m (81 lb ft) 2. 160 degrees **Special Tools** *EN-45059* Angle Meter For equivalent regional tools, refer to Special Tools .
4	Steering Gear **Procedure** 1. Disconnect the electrical connectors. Refer to FEP Connectors : Steering Gear . 2. After the installation is complete, measure the wheel alignment and adjust the alignment as necessary. Refer to Wheel Alignment Measurement . 3. Programme the power steering control module. Refer to Power Steering Control Module Programming and Setup . 4. Centre the steering angle sensor and learn the software end stops. Refer to Power Steering Control Module Calibration .

&#169© Copyright Chevrolet. All rights reserved

Steering Linkage Inner Tie Rod Replacement

Removal Procedure

1. Raise and support the vehicle. Refer to Lifting and Jacking the Vehicle .
2. Remove the steering gear boot. Refer to Steering Gear Boot Replacement .
3. Turn the steering wheel in order to position the steering gear rack so that only 2 rack teeth and the flat surface of the rack are visible outside the steering gear housing.

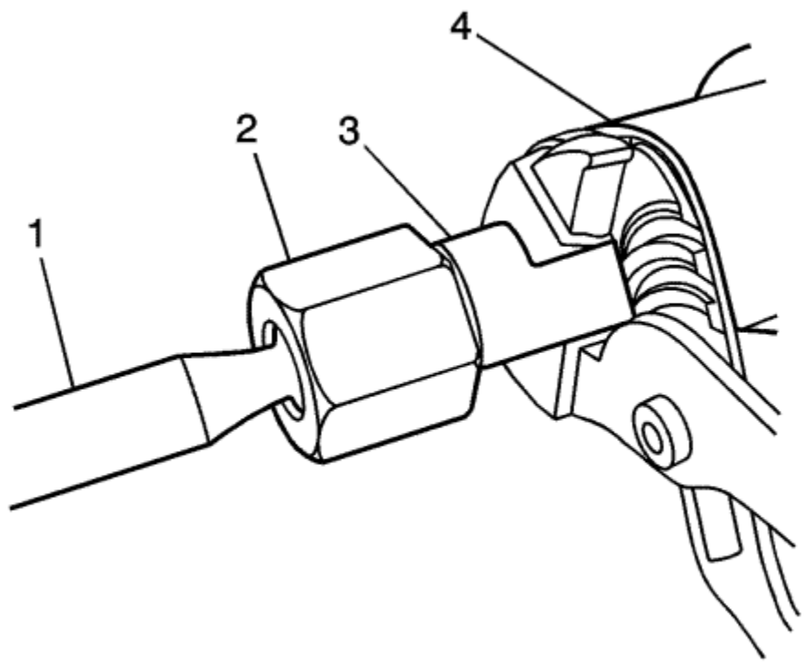

4. Place a soft jaw pipe wrench or soft jaw pliers on the flat surface of the steering gear rack (3) between the steering gear housing (4) and the inner tie rod housing (2).
5. Place a crow's foot spanner on the flats of the inner tie rod housing.

Caution: Do not change the steering gear preload adjustment before moving the inner tie rod from the steering gear. Changing the steering gear preload adjustment before moving the inner tie rod could result in damage to the pinion and the steering gear.

6. Rotate the steering linkage inner tie rod housing counter-clockwise while holding the steering gear rack stationary until the steering linkage inner tie rod separates from the steering gear rack.

Installation Procedure

1. Install the steering linkage inner tie rod to the steering gear rack.

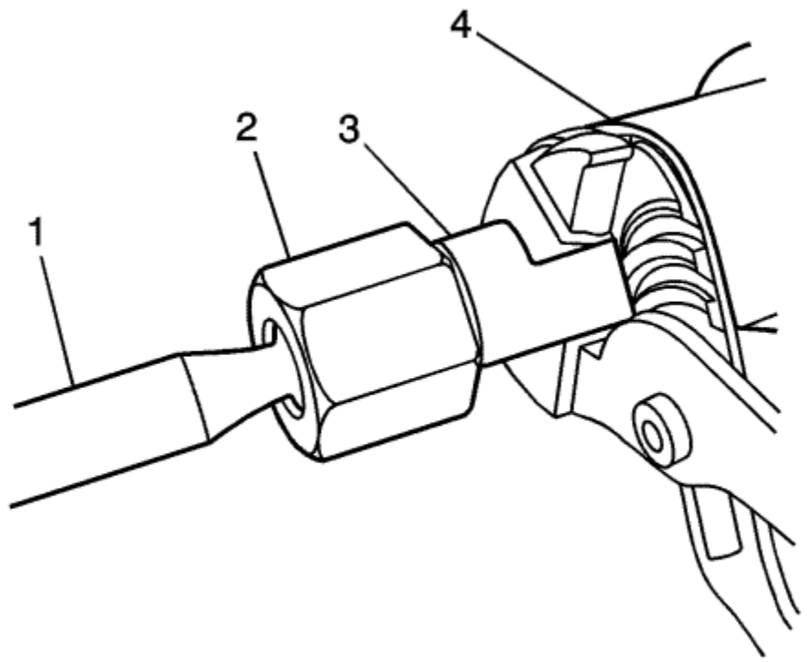

2. Place a soft jaw pipe wrench or soft jaw pliers on the flat surface of the steering gear rack (3) between the steering gear housing (4) and the inner tie rod housing (2).

   Caution: Refer to Fastener Caution in the Preface section.

3. Place a torque spanner with a crow's foot spanner attachment on the flats of the inner tie rod housing and tighten to **100 N·m (74 lb ft)**.
4. Install the steering gear boot. Refer to Steering Gear Boot Replacement .
5. Lower the vehicle.

© Copyright Chevrolet. All rights reserved

Steering Gear Drive Coupling Replacement

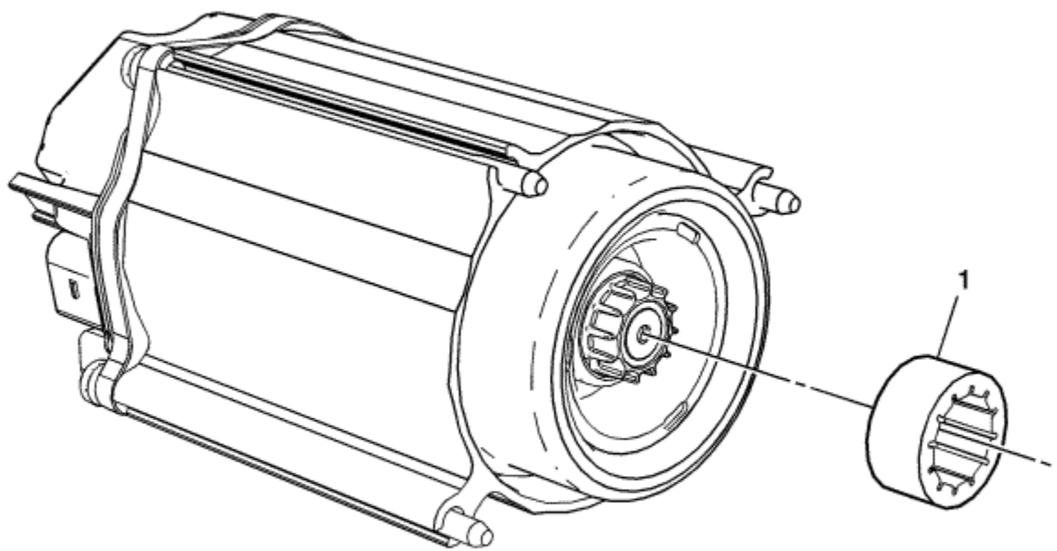

Callout	Component Name
Preliminary Procedure 1. Raise and support the vehicle. Refer to Lifting and Jacking the Vehicle . 2. Remove the power steering assist motor. Refer to Power Steering Assist Motor Replacement .	

1	Steering Gear Coupling **Tip** The steering gear coupling connects the power steering assist motor to the steering gear.

© Copyright Chevrolet. All rights reserved

Power Steering Assist Motor Replacement

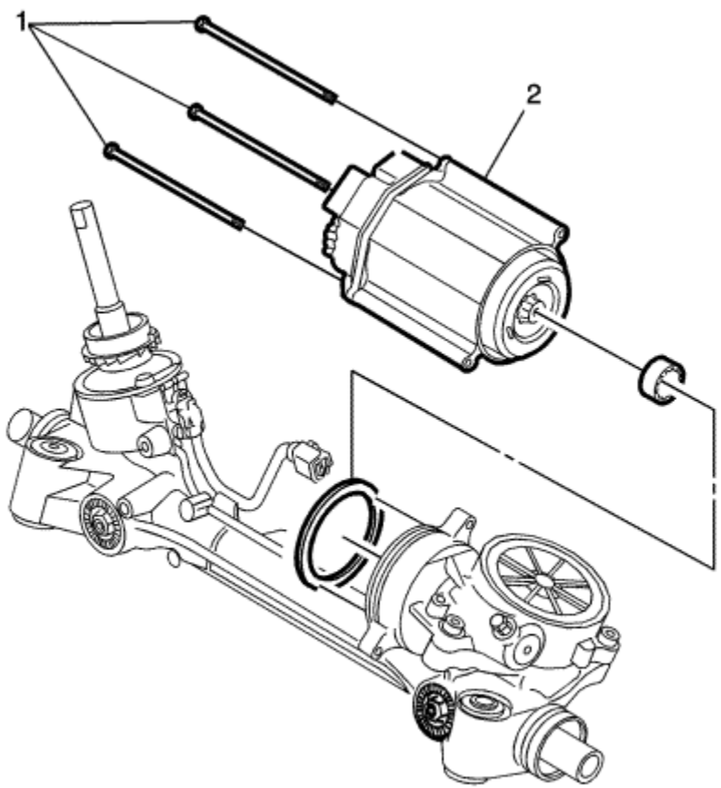

Callout	Component Name
Caution: Electrostatic discharge (ESD) can damage many solid-state electrical components. ESD susceptible components may or may not be labelled with the ESD symbol. Handle all electrical components carefully. Use the following precautions in order to avoid ESD damage: • Touch a metal ground point in order to remove your body's static charge before servicing any electronic component; especially after sliding across the vehicle seat. • Do not touch exposed terminals. Terminals may connect to circuits susceptible to ESD damage. • Do not allow tools to contact exposed terminals when servicing connectors.	

- Do not remove components from their protective packaging until required to do so.
- Avoid the following actions unless required by the diagnostic procedure:
  - Jumpering or grounding of the components or connectors.
  - Connecting test equipment probes to components or connectors. Connect the ground lead first when using test probes.
- Ground the protective packaging of any component before opening. Do not rest solid-state components on metal workbenches, or on top of TVs, radios, or other electrical devices.

Preliminary Procedures

1. Capture the data from the old power steering assist motor. Refer to Power Steering Control Module Programming and Setup .
2. Raise and support the vehicle. Refer to Lifting and Jacking the Vehicle .
3. Remove the steering gear. Refer to Steering Gear Replacement .

1	Power Steering Assist Motor Bolt (Qty: 3) **Caution:** Refer to Fastener Caution in the Preface section. **Procedure** 1. Remove the 3 power steering assist motor bolts. Discard the bolts. 2. Install 3 NEW power steering assist motor bolts. **Tighten** 8 N·m (71 lb in)
2	Power Steering Assist Motor **Procedure** 1. Remove the O-ring from the steering gear housing. Discard the O-ring. 2. Install a NEW O-ring around the steering gear housing. 3. Install the steering gear coupling to the assist motor armature. 4. Align the steering gear coupling on the assist motor armature to the steering gear. 5. Align the power steering assist motor bolts to the steering gear while pressing the motor over the gear housing O-ring. 6. After the installation is complete, transfer the data from the old power steering assist motor to the new power steering assist motor. Refer to Power Steering

	Control Module Programming and Setup .

&#169© Copyright Chevrolet. All rights reserved

Power Steering Control Module Calibration

Steering Angle Sensor Centring and Software Endstop Learning

Warning: An inaccurate or not centred steering angle sensor could limit the operation of the electric power steering (EPS) and result in personal injury.

Centring of the steering angle sensor and software endstop learning might be required after certain service procedures are performed. Some of these procedures are as follows:

- Steering angle sensor replacement
- Steering gear replacement
- Power steering assist motor replacement
- Steering column replacement
- Steering linkage inner track rod replacement
- Steering linkage outer track rod replacement

Note: It is necessary to perform the steering angle sensor centring before the software endstop learning.

Steering Angle Sensor Centreing

For the centring procedure of the external steering angle sensor (electronic stability program) refer to Steering Angle Sensor Centreing . The centring procedure of the internal steering angle sensor (w/o electronic stability program) can be completed with the following steps:

Conditions: Front axle measured and set, engine running, vehicle speed 0 km/h (0 MPH), internal steering angle sensor is activated.

1. Using the steering wheel, align the front wheels in the center forward position.
2. Using a scan tool, perform the Configuration/Reset Functions, Steering Wheel Angle Sensor Centring procedure.
3. Steer from the centre position slowly 90° to the left.
4. Steer slowly back to the centre position and then slowly 90° to the right.
5. Steer slowly back to the centre position.
6. Perform the steering movements again.
7. Centring procedure is completed.

Software Endstop Learning

The software endstop learning procedure can be completed with the following steps:

Conditions: Front axle measured and set, vehicle speed 0 km/h (0 MPH), internal steering angle sensor is calibrated or external steering angle sensor sends a valid CAN signal.

1. Using a scan tool, perform the Configuration/Reset Functions, Power Steering Softstops Reset procedure and follow the on-screen instructions.
2. Using a scan tool, perform the Configuration/Reset Functions, Power Steering Softstops Learn procedure and follow the on-screen instructions.
3. Software endstop learning procedure is completed.

&#169© Copyright Chevrolet. All rights reserved

Power Steering System Description and Operation — Electronic Power Steering

The power steering system consists of the following components:

- The power steering control module
- The power steering motor
- The power steering motor rotational sensor
- The torque sensor
- The steering gear (rack and dual pinion)

The rack and dual pinion electric power steering system reduces the amount of effort needed to steer the vehicle utilising the power steering control module to control the power steering motor to manoeuvre the steering gear. The power steering control module also uses a combination of the torque sensor, motor rotational sensor, battery voltage circuit and GMLAN serial data circuit to perform the system functions. The power steering control module monitors vehicle speed and engine speed from the engine control module via the GMLAN serial data circuit to determine the amount of steering assist needed to steer the vehicle. At low speeds more assist is provided for easy turning during parking manoeuvres. At higher speeds less assist is provided for improved road feel and directional stability.

The power steering control module uses a combination of the torque sensor, motor rotational sensor, vehicle speed, and calculated system temperature inputs to determine the amount of assist needed. The power steering control module continuously monitors the digital torque sensor's torque and index current signals. As the steering wheel is turned and torsional twist is applied to the steering shaft, the steering input and output shafts are monitored via the torque signal circuit and then processed by the power steering control module to calculate the steering torque. The voltage signals of the motor position sensor and the digital torque sensor's index current signal are both processed by the power steering control module to detect and calculate the steering wheel angle.

The power steering control module responds to the change in the digital torque sensor signals as well as the motor rotational sensor's voltage signals by commanding current to the power steering motor. The power steering control module controls the pulse width modulated motor drive circuit to drive the 3-phase motor. The power steering control module and motor assembly is attached to the base of the steering gear housing and assists the steering gear pinion to manoeuvre the rack from left to right according to turning the steering wheel.

The power steering control module has the ability to calculate an internal system temperature to protect the power steering system from damage caused by high temperature. To reduce a high system temperature, the power steering control module will reduce the amount of current commanded to the power steering motor, which reduces the amount of steering assist. The power steering control module has the ability to detect malfunctions within the electric power steering system. Any malfunction detected that disables steering assist will cause the SERVICE POWER STEERING message to be displayed on the driver information centre.

© Copyright Chevrolet. All rights reserved

Special Tools

Illustration	Tool Number/ Description
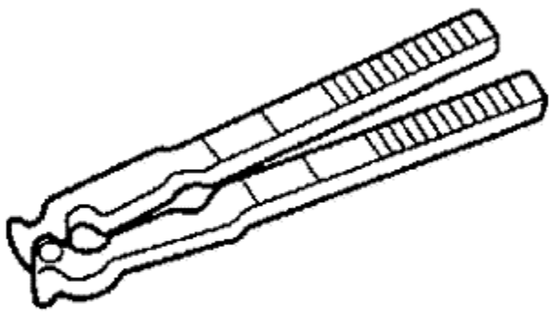	CH-22610 J-22610 Keystone Clamp Pliers
	CH-24319-B J-24319-B Steering Linkage and Tie Rod Puller

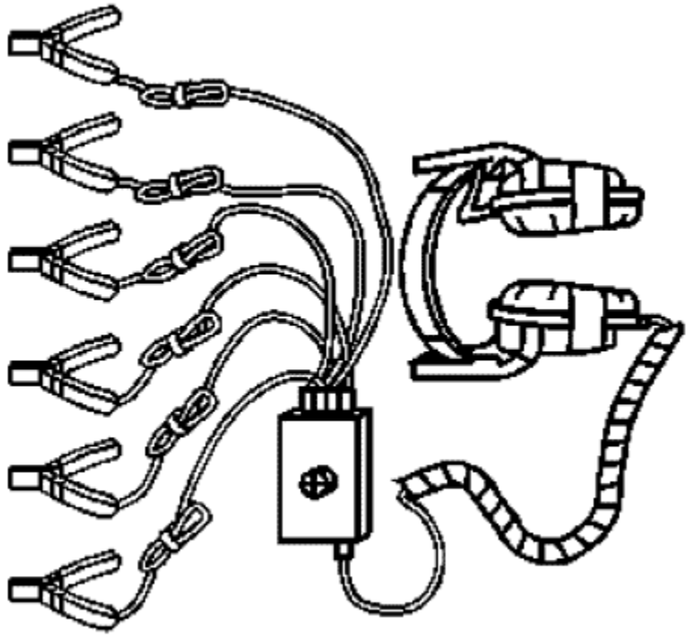	CH-39570 J-39570 Chassis Ear
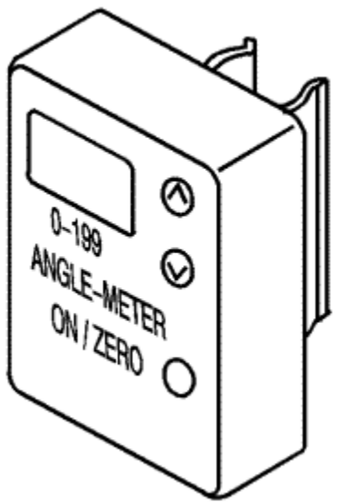	EN-45059 J-45059 Angle Meter

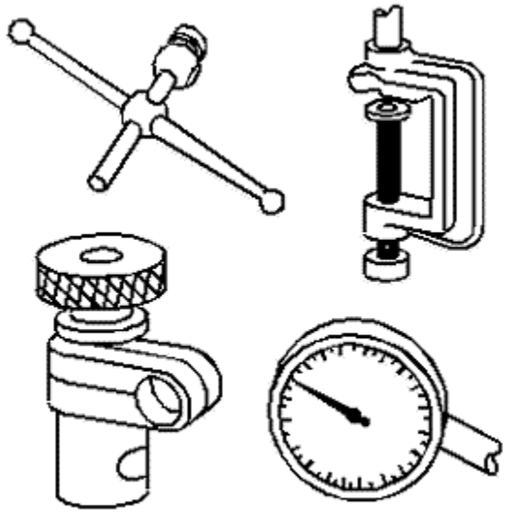	GE-8001 J-8001 Dial Indicator Set

© Copyright Chevrolet. All rights reserved

Fastener Tightening Specifications

Application	Specification	
	Metric	English
Intermediate Steering Shaft Lower Bolt	34 N·m	25 lb ft
Intermediate Steering Shaft Upper Bolt	34 N·m	25 lb ft
Steering Column Lock Control Module Bolts -- left and right sides of the module	9.5 N·m	84 lb in
Steering Column Nut	22 N·m	16 lb ft
Steering Wheel Bolt	30 N·m	22 lb ft

© Copyright Chevrolet. All rights reserved

Adhesives, Fluids, Lubricants, and Sealers

Application	Type of Material	GM Part Number	
		United States	Canada
Intermediate Steering Shaft Lower Bolt Thread Locking Adhesive	Medium Strength Threadlocker - Blue Loctite® 242	12345382	10953489
Intermediate Steering Shaft Upper Bolt Thread Locking Adhesive	Medium Strength Threadlocker - Blue Loctite® 242	12345382	10953489

© Copyright Chevrolet. All rights reserved

Column Lock Schematics

Steering Column Lock

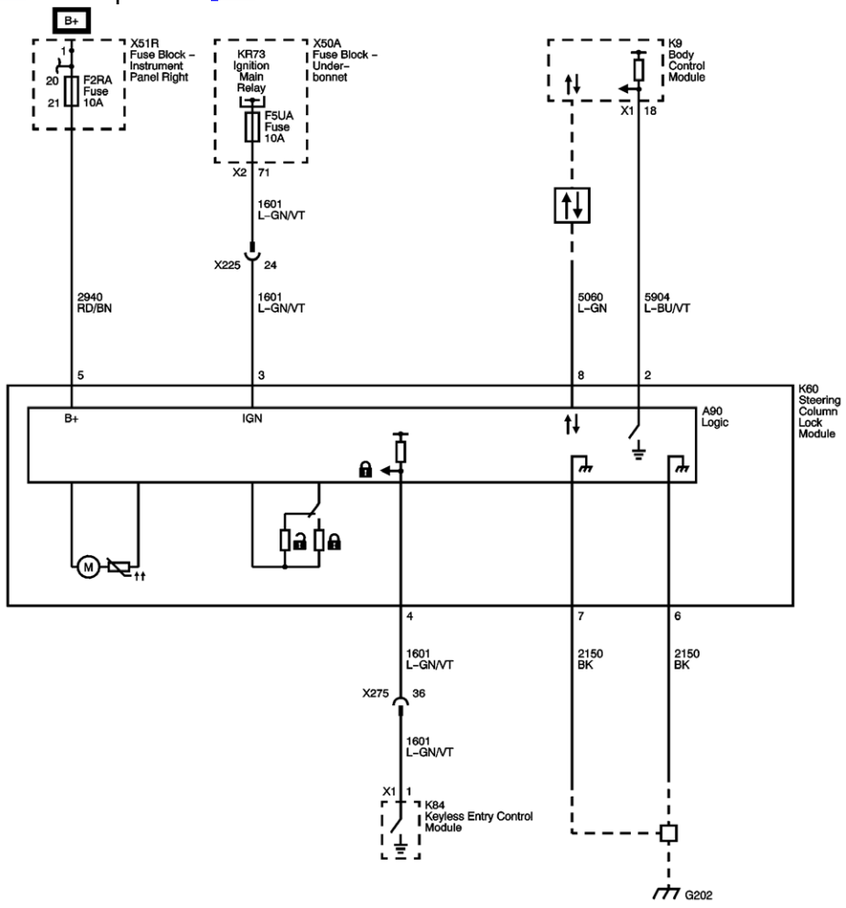

Master Electrical Component List

Steering Wheel and Column Description and Operation

© Copyright Chevrolet. All rights reserved

DTC B1023

Diagnostic Instructions

- Perform the Diagnostic System Check - Vehicle prior to using this diagnostic procedure.
- Review Strategy Based Diagnosis for an overview of the diagnostic approach.
- Diagnostic Procedure Instructions provides an overview of each diagnostic category.

DTC Descriptor

DTC B1023 00: Integral Switch Malfunction

Circuit/System Description

The vehicle theft deterrent subsystem provides the capability to lock or unlock the steering electrically. The steering column lock control module is allowed to unlock when power mode transitions to a non off power mode and an authenticated driver identification device is present. Once the column is unlocked, a crank request can be allowed.

Conditions for Running the DTC

- The ignition is in OFF, ACCESSORY or RUN position.
- The system voltage is between 9–16 V.

Conditions for Setting the DTC

The steering column lock control module detects an internal sensor malfunction resulting in lock status of invalid to be transmitted on serial data.

Action Taken When the DTC Sets

- DTC B1023 is stored in memory.
- The driver information centre displays the service column lock system warning message.
- The steering column lock indicator is ON.

Conditions for Clearing the DTC

- No steering column lock control module internal sensor malfunction so lock status of valid is transmitted on serial data.
- The condition for setting the DTC is no longer present.

Reference Information

Schematic Reference

Column Lock Schematics

Connector End View Reference

Component Connector End Views

Description and Operation

Steering Wheel and Column Description and Operation

Electrical Information Reference

- Circuit Testing
- Connector Repairs
- Testing for Intermittent Conditions and Poor Connections
- Wiring Repairs

Scan Tool Reference

Control Module References for scan tool information

Circuit/System Verification

Clear all DTCs and operate the integral switch at the steering column lock within the conditions for running the DTC. The DTC should not set.

If the DTC sets, replace the K60 Steering Column Lock Control Module.

Repair Instructions

Perform the Diagnostic Repair Verification after completing the diagnostic procedure.

Control Module References for steering column lock control module replacement, setup and programming

&#169© Copyright Chevrolet. All rights reserved

DTC B144C

Diagnostic Instructions

- Perform the Diagnostic System Check - Vehicle prior to using this diagnostic procedure.
- Review Strategy Based Diagnosis for an overview of the diagnostic approach.
- Diagnostic Procedure Instructions provides an overview of each diagnostic category.

DTC Descriptors

DTC B144C 01: Inverted Run/Start Power Relay Circuit Short to Battery

DTC B144C 06: Inverted Run/Start Power Relay Circuit Low Voltage/Open

Diagnostic Fault Information

Circuit	Short to Ground	Open/High Resistance	Short to Voltage	Signal Performance
Run Crank Relay B+	B144C 06	B144C 06	—	—
Off/Accessory Voltage	B144C 06	B144C 06	B144C 01	—

Circuit/System Description

The vehicle theft deterrent subsystem provides the capability to lock or unlock the steering column electrically. The steering column lock control module is allowed to unlock when power mode transitions to a non off power mode and an authenticated driver identification device is present. Once the column is unlocked, a crank request can be allowed.

Conditions for Running the DTC

- The system voltage is between 9–16 V.
- The DTC can only run when the steering column lock control module is awake.

Conditions for Setting the DTC

B144C 01

The steering column lock control module detects a short to voltage when the power mode is in the RUN or CRANK for greater than 5 seconds.

B144C 06

The steering column lock control module detects a short to ground or an open in the Off/Accessory circuit when the power mode is in the OFF/ACC for greater than 3 seconds.

Action Taken When the DTC Sets

- The steering column lock control module will command the driver information centre to display the service column lock warning message.
- The steering column lock control module indicator is ON.

Conditions for Clearing the DTC

- The DTC will be current for as long as the fault is present.
- The DTC will be a history DTC when the voltage is present and the power mode is OFF or ACC or when voltage is not present and the power mode is RUN or CRANK.
- A history DTC will clear after 50 ignition cycles.

Diagnostic Aids

Verify that DTC B144B is not set prior to performing extensive electrical diagnostics.

Reference Information

Schematic Reference

- Column Lock Schematics
- Power Moding Schematics

Connector End View Reference

Component Connector End Views

Description and Operation

Steering Wheel and Column Description and Operation

Electrical Information Reference

- Circuit Testing
- Connector Repairs
- Testing for Intermittent Conditions and Poor Connections
- Wiring Repairs

Scan Tool Reference

Control Module References for scan tool information

Circuit/System Testing

1. Ignition OFF, disconnect the KR73 RUN/CRNK relay.
2. Ignition ON, verify that a test lamp does not illuminate between the control circuit terminal 87A and ground.
   If the test lamp illuminates, test the control circuit for a short to voltage. If the circuit tests normal, replace the K60 Steering Column Lock Control Module.
3. Verify that a test lamp illuminates between the B+ circuit terminal 30 and ground.
   If the test lamp does not illuminate, test the B+ circuit for an open/high resistance.
4. Ignition OFF, disconnect the harness connector at the K60 steering column lock control module.
5. Connect a test lamp between the voltage circuit terminal 3 and ground.
6. Ignition ON, connect a 5 A fused jumper wire between the B+ circuit terminal 30 and the control circuit terminal 87A. Verify the test lamp is illuminated.
   If the test lamp is not illuminated and the control circuit fuse is good, test the control circuit for an open/high resistance.
   If the test lamp is not illuminated and the control circuit fuse is open, test the control circuit for a short to ground. If the circuit tests normal, replace the K60 steering column lock control module.
7. If all circuits test normal, test or replace the KR73 RUN/CRNK relay.

Component Testing

Relay Test

1. Ignition OFF, disconnect the KR73 RUN/CRNK relay.
2. Test for 60-200 Ω between terminals 85 and 86.
   If not within the specified range, replace the KR73 RUN/CRNK relay.
3. Test for infinite resistance between the following terminals:
   - 30 and 86
   - 30 and 87
   - 30 and 85

- 85 and 87

  If not the specified value, replace the KR73 RUN/CRNK relay.

4. Test for less than 2 Ω between terminals 30 and 87A.
   If greater than the specified range, replace the KR73 RUN/CRNK relay.
5. Install a 3 A fused jumper wire between the relay terminal 85 and 12 V. Install a jumper wire between the relay terminal 86 and ground. Test for less than 2 Ω between terminals 30 and 87.
   If greater than specified range, replace the KR73 RUN/CRNK relay.

Repair Instructions

Perform the Diagnostic Repair Verification after completing the diagnostic procedure.

- Relay Replacement : Within an Electrical Centre → Attached to Wire Harness
- Control Module References for the steering column lock control module replacement, setup and programming

&#169© Copyright Chevrolet. All rights reserved

DTC B2515

Diagnostic Instructions

- Perform the Diagnostic System Check - Vehicle prior to using this diagnostic procedure.
- Review Strategy Based Diagnosis for an overview of the diagnostic approach.
- Diagnostic Procedure Instructions provides an overview of each diagnostic category.

DTC Descriptor

DTC B2515 5A: Steering Column Lock Motor Feedback Circuit Not Plausible

Circuit/System Description

The vehicle theft deterrent subsystem provides the capability to lock or unlock the steering electrically. The steering column lock control module is allowed to unlock when power mode transitions to a non off power mode and an authenticated driver identification device is present. Once the column is unlocked, a crank request can be allowed.

Conditions for Running the DTC

- The ignition is in OFF, ACCESSORY or RUN position.
- The system voltage is between 9–16 V.

Conditions for Setting the DTC

The body control module (BCM) detects a not plausible feedback from the steering column lock control module.

Action Taken When the DTC Sets

- DTC B2515 is stored in memory.
- The driver information centre displays the service column lock system warning message.
- The steering column lock indicator is ON.

Conditions for Clearing the DTC

- The condition for setting the DTC is no longer present.
- The BCM detects a plausible feedback from the steering column lock control module.

Reference Information

Schematic Reference

Column Lock Schematics

Connector End View Reference

Component Connector End Views

Description and Operation

Steering Wheel and Column Description and Operation

Electrical Information Reference

- Circuit Testing
- Connector Repairs
- Testing for Intermittent Conditions and Poor Connections
- Wiring Repairs

Scan Tool Reference

Control Module References for scan tool information

Circuit/System Verification

Clear all DTCs and operate the steering column lock control module within the conditions for running the DTC. The DTC should not set.

If the DTC sets, replace the K60 Steering Column Lock Control Module. If the DTC resets replace K9 Body Control Module.

Repair Instructions

Perform the Diagnostic Repair Verification after completing the diagnostic procedure.

Control Module References for steering column lock control module and BCM replacement, setup and programming

&#169© Copyright Chevrolet. All rights reserved

DTC B2897

Diagnostic Instructions

- Perform the Diagnostic System Check - Vehicle prior to using this diagnostic procedure.
- Review Strategy Based Diagnosis for an overview of the diagnostic approach.
- Diagnostic Procedure Instructions provides an overview of each diagnostic category.

DTC Descriptors

DTC B2897 02: Steering Column Lock Motor Lock Circuit Short to Ground

DTC B2897 05: Steering Column Lock Motor Lock Circuit High Voltage/Open

Diagnostic Fault Information

Circuit	Short to Ground	Open/High Resistance	Short to Voltage	Signal Performance
Steering Column Lock Motor Lock Signal	B2897 02	B2897 05	B2897 05	—

Circuit/System Description

The vehicle theft deterrent subsystem provides the capability to lock or unlock the steering electrically. The steering column lock control module is allowed to unlock when power mode transitions to a non off power mode and an authenticated driver identification device is present. Once the column is unlocked, a crank request can be allowed.

Conditions for Running the DTC

- The ignition is in OFF, ACCESSORY or RUN position.
- The system voltage is between 9–16 V.

Conditions for Setting the DTC

B2897 02

The steering column lock enable input circuit is shorted to ground.

B2897 05

The steering column lock enable input circuit is open or shorted to battery.

Action Taken When the DTC Sets

- DTC B2897 is stored in the steering column lock control module memory.
- The steering column lock control module will command the driver information centre to display the service column lock warning message.
- The steering column lock control module indicator is ON.

Conditions for Clearing the DTC

The steering column lock control module has received a lock command and detects no longer a malfunction in the steering column lock circuit.

Reference Information

Schematic Reference

Column Lock Schematics

Connector End View Reference

Component Connector End Views

Description and Operation

Steering Wheel and Column Description and Operation

Electrical Information Reference

- Circuit Testing
- Connector Repairs
- Testing for Intermittent Conditions and Poor Connections
- Wiring Repairs

Scan Tool Reference

Control Module References for scan tool information

Circuit/System Testing

1. Ignition OFF, disconnect the harness connector at the K60 Steering Column Lock Control Module.
2. Test for less than 10 Ω between the ground circuit terminals 6 and 7 and ground.
   If greater than the specified value, test the ground circuit for an open/high resistance.
3. Verify that a test lamp illuminates between the B+ circuit terminal 5 and ground.
   If the test lamp does not illuminate, test the B+ circuit for a short to ground or an open/high resistance.
4. Ignition ON, verify that a test lamp illuminates between the ignition circuit terminal 3 and ground
   If the test lamp does not illuminate, test the ignition circuit for a short to ground or an open/high resistance.
5. Test for less than 0.3 V between the control circuit terminal 4 and ground.
   If greater than the specified value, test the control circuit for a short to voltage.
6. Disconnect the connector at the K84 Keyless Entry Control Module.
7. Test for less than 5 Ω between the K60 Steering Column Lock Control Module circuit terminal 4 and the K84 Keyless Entry Control Module circuit terminal 1.
   If greater than the specified range, test the control circuit for a open/high resistance.
8. If all circuits test normal, test or replace the K60 Steering Column Lock Control Module. If the DTC resets replace the K84 Keyless Entry Control Module.

Repair Instructions

Perform the Diagnostic Repair Verification after completing the diagnostic procedure.

Control Module References for Steering Column Lock Control Module or Keyless Entry Control Module replacement, setup and programming

&#169© Copyright Chevrolet. All rights reserved

DTC B2910

Diagnostic Instructions

- Perform the Diagnostic System Check - Vehicle prior to using this diagnostic procedure.
- Review Strategy Based Diagnosis for an overview of the diagnostic approach.
- Diagnostic Procedure Instructions provides an overview of each diagnostic category.

DTC Descriptor

DTC B2910 00: Steering Column Lock Password Incorrect

Circuit/System Description

The vehicle theft deterrent subsystem provides the capability to lock or unlock the steering electrically. The steering column lock control module is allowed to unlock when power mode transitions to a non off power mode and an authenticated driver identification device is present. Once the column is unlocked, a crank request can be allowed.

Conditions for Running the DTC

- The ignition is in OFF, ACCESSORY or RUN position.
- The system voltage is between 9–16 V.

Conditions for Setting the DTC

The steering column lock control module has not received the correct password or did not receive a password with the command to unlock the steering column.

Action Taken When the DTC Sets

- DTC B2910 is stored in memory.
- The driver information centre displays the service column lock system warning message.
- The steering column lock indicator is ON.
- The engine will not crank.

Conditions for Clearing the DTC

- The condition for setting the DTC is no longer present.
- The steering column lock control module has received the correct password with the command to unlock the steering column.

Diagnostic Aids

This DTC may set if the BCM was replaced and the steering column lock control module was not reprogrammed.

Reference Information

Schematic Reference

Column Lock Schematics

Connector End View Reference

Component Connector End Views

Description and Operation

Steering Wheel and Column Description and Operation

Electrical Information Reference

- Circuit Testing
- Connector Repairs
- Testing for Intermittent Conditions and Poor Connections
- Wiring Repairs

Scan Tool Reference

Control Module References for scan tool information

Circuit/System Verification

Clear all DTCs and operate the steering column lock control module within the conditions for running the DTC. The DTC should not set.

If the DTC sets, reprogram the K60 Steering Column Lock Control Module. If the DTC resets, replace the K60 Steering Column Lock Control Module.

Repair Instructions

Perform the Diagnostic Repair Verification after completing the diagnostic procedure.

Control Module References for steering column lock control module replacement, setup and programming

&#169© Copyright Chevrolet. All rights reserved

DTC B305A

Diagnostic Instructions

- Perform the Diagnostic System Check - Vehicle prior to using this diagnostic procedure.
- Review Strategy Based Diagnosis for an overview of the diagnostic approach.
- Diagnostic Procedure Instructions provides an overview of each diagnostic category.

DTC Descriptor

DTC B305A 00: No Response From Steering Column Lock Received

Circuit/System Description

The vehicle theft deterrent subsystem provides the capability to lock or unlock the steering electrically. The steering column lock control module is allowed to unlock when power mode transitions to a non off power mode and an authenticated driver identification device is present. Once the column is unlocked, a crank request can be allowed.

Conditions for Running the DTC

- The ignition is in OFF, ACCESSORY or RUN position.
- The system voltage is between 9–16 V.

Conditions for Setting the DTC

The body control module (BCM) has not received any response from the steering column lock control module.

Action Taken When the DTC Sets

- DTC B305A is stored in the BCM memory.
- The driver information centre displays the service column lock system warning message.
- The steering column lock indicator is ON.

Conditions for Clearing the DTC

- The condition for setting the DTC is no longer present.
- The BCM has received response from the steering column lock control module.

Reference Information

Schematic Reference

Column Lock Schematics

Connector End View Reference

Component Connector End Views

Description and Operation

Steering Wheel and Column Description and Operation

Electrical Information Reference

- Circuit Testing
- Connector Repairs
- Testing for Intermittent Conditions and Poor Connections
- Wiring Repairs

Scan Tool Reference

Control Module References for scan tool information

Circuit/System Verification

Clear all DTCs and operate the steering column lock within the conditions for running the DTC. The DTC should not set.

If the DTC sets, replace the K60 Steering Column Lock Control Module. If the DTC resets replace the K9 Body Control Module.

Repair Instructions

Perform the Diagnostic Repair Verification after completing the diagnostic procedure.

Control Module References for steering column lock control module and body control module replacement, setup and programming

&#169© Copyright Chevrolet. All rights reserved

Intermediate Steering Shaft Replacement

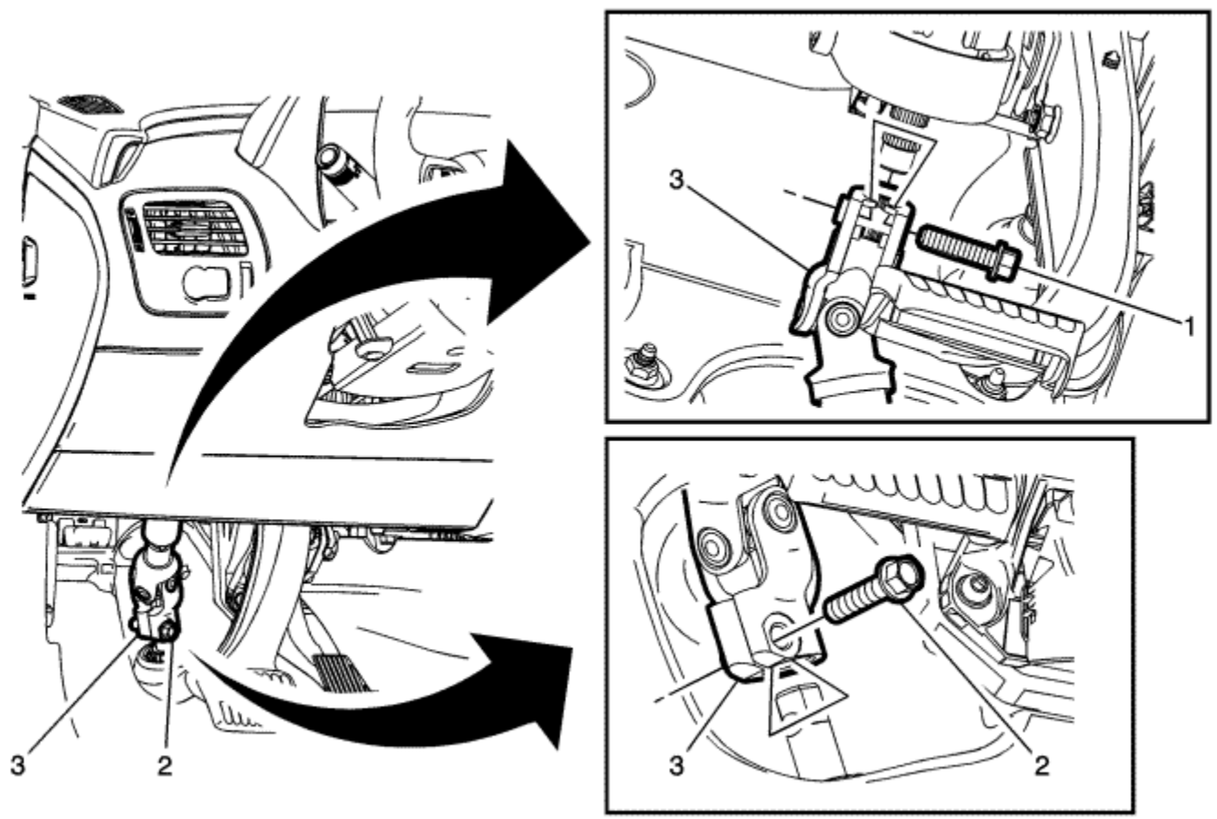

Callout	Component Name
Caution: With wheels of the vehicle facing straight ahead, secure the steering wheel utilizing steering column anti-rotation pin, steering column lock, or a strap to prevent rotation. Locking of the steering column will prevent damage and a possible malfunction of the SIR system. The steering wheel must be secured in position before disconnecting the following components: • The steering column • The intermediate shaft(s)	

- The steering gear

After disconnecting these components, do not rotate the steering wheel or move the front tyres and wheels. Failure to follow this procedure may cause the SIR coil assembly to become un-centred and cause possible damage to the SIR coil. If you think the SIR coil has became uncentred, refer to your specific SIR coil's centring procedure to re-centre SIR Coil.

Preliminary Procedures

1. With the front wheels in the straight ahead position, pull the driver's seat belt between the spokes on the steering wheel and buckle the seat belt in order to secure the steering wheel.
2. Use paint in order to place match marks on the steering gear pinion shaft and on the intermediate steering shaft.
3. Use paint in order to place match marks on the steering column shaft and on the intermediate steering shaft.

1	Intermediate Steering Shaft Upper Bolt **Caution:** Refer to Fastener Caution in the Preface section. **Procedure** 1. Remove all traces of the original adhesive patch. 2. Clean the threads of the bolt with denatured alcohol, or equivalent, and allow to dry. 3. Apply thread locking adhesive. Refer to Adhesives, Fluids, Lubricants, and Sealers . **Tighten** 34 N·m (25 lb ft)
2	Intermediate Steering Shaft Lower Bolt **Procedure** 1. Remove all traces of the original adhesive patch. 2. Clean the threads of the bolt with denatured alcohol, or equivalent, and allow to dry. 3. Apply thread locking adhesive. Refer to Adhesives, Fluids, Lubricants, and Sealers . **Tighten** 34 N·m (25 lb ft)
3	Intermediate Steering Shaft **Procedure** 1. If you are replacing the intermediate steering shaft, copy the match marks from the old intermediate steering shaft to the new intermediate steering shaft. 2. After installation, center the steering angle sensor. Refer to Steering Angle Sensor Centreing .

&#169© Copyright Chevrolet. All rights reserved

Steering Column Upper Trim Cover Replacement

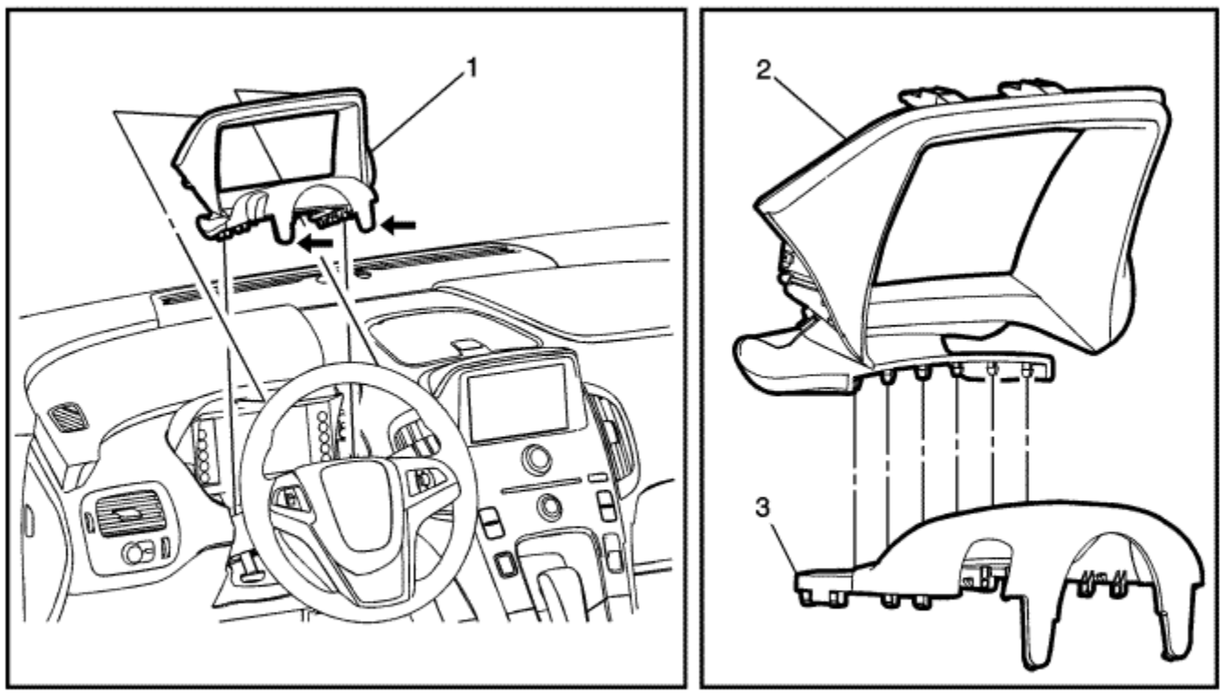

Callout	Component Name
Note: The instrument panel cluster trim plate and the steering column upper trim cover must be removed as an assembly, do not attempt to separate. **Preliminary Procedures** Disable the SIR system. Refer to SIR Disabling and Enabling .	

1	Instrument Panel Cluster Trim Plate and Steering Column Upper Trim Cover Assembly **Procedures** 1. Turn the steering wheel to the left in order to release the left tab securing the upper trim cover to the lower trim cover. 2. Release the retainers along the left side of the upper trim cover securing it to the lower trim cover. 3. While holding the left side of the trim cover up, turn the steering wheel enough to release the right retainer tab securing the right side of the upper trim cover to the lower trim cover. 4. Release the retainers along the right side of the upper trim cover securing it to the lower trim cover. 5. Grasp the instrument panel cluster trim plate and steering column upper trim cover assembly and pull rearward releasing the clips securing the assembly to the instrument panel.
2	Instrument Panel Cluster Trim Plate Assembly
3	Steering Column Upper Trim Cover **Procedure** When replacing either the instrument panel cluster trim plate or the steering column upper trim cover snap the two pieces together prior to installing them into the vehicle.

© Copyright Chevrolet. All rights reserved

Steering Column Lower Trim Cover Replacement

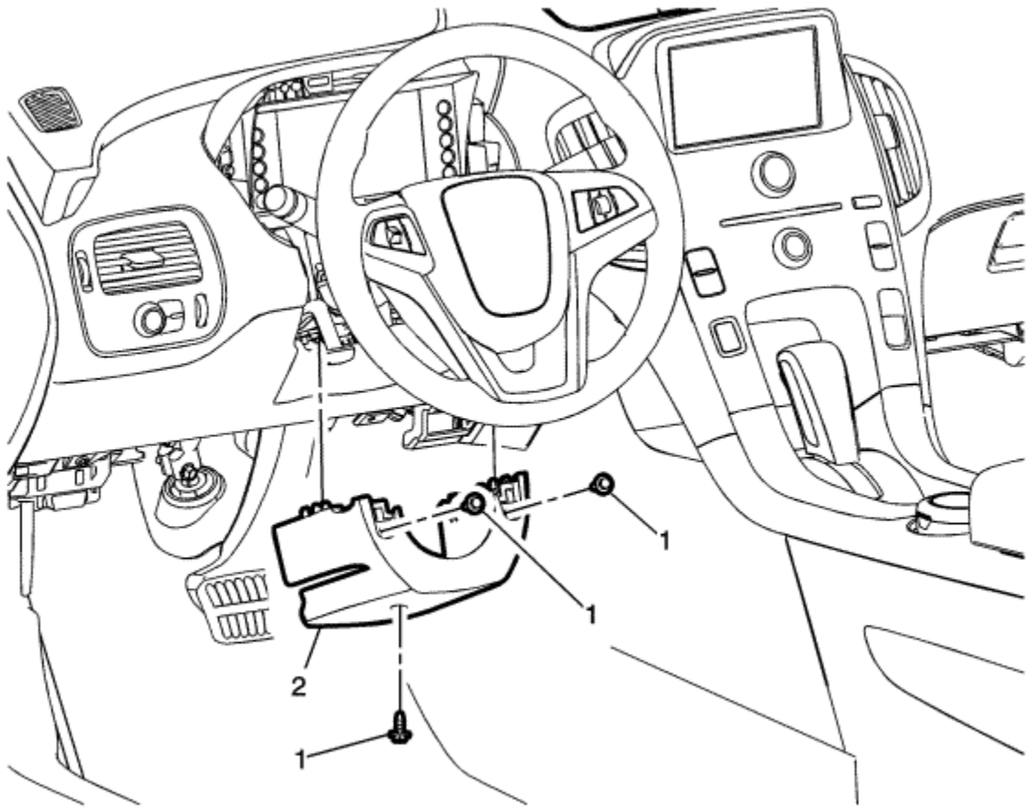

Callout	Component Name
Preliminary Procedure Remove the instrument panel cluster trim plate and steering column upper trim cover assembly. Refer to Steering Column Upper Trim Cover Replacement .	
	Steering Column Lower Trim Cover Fastener (Qty: 3)

1	**Caution:** Refer to Fastener Caution in the Preface section. **Procedure** Turn the steering wheel right or left enough to access the fasteners.
2	Steering Column Lower Trim Cover

© Copyright Chevrolet. All rights reserved

Steering Column Lock Control Module Replacement

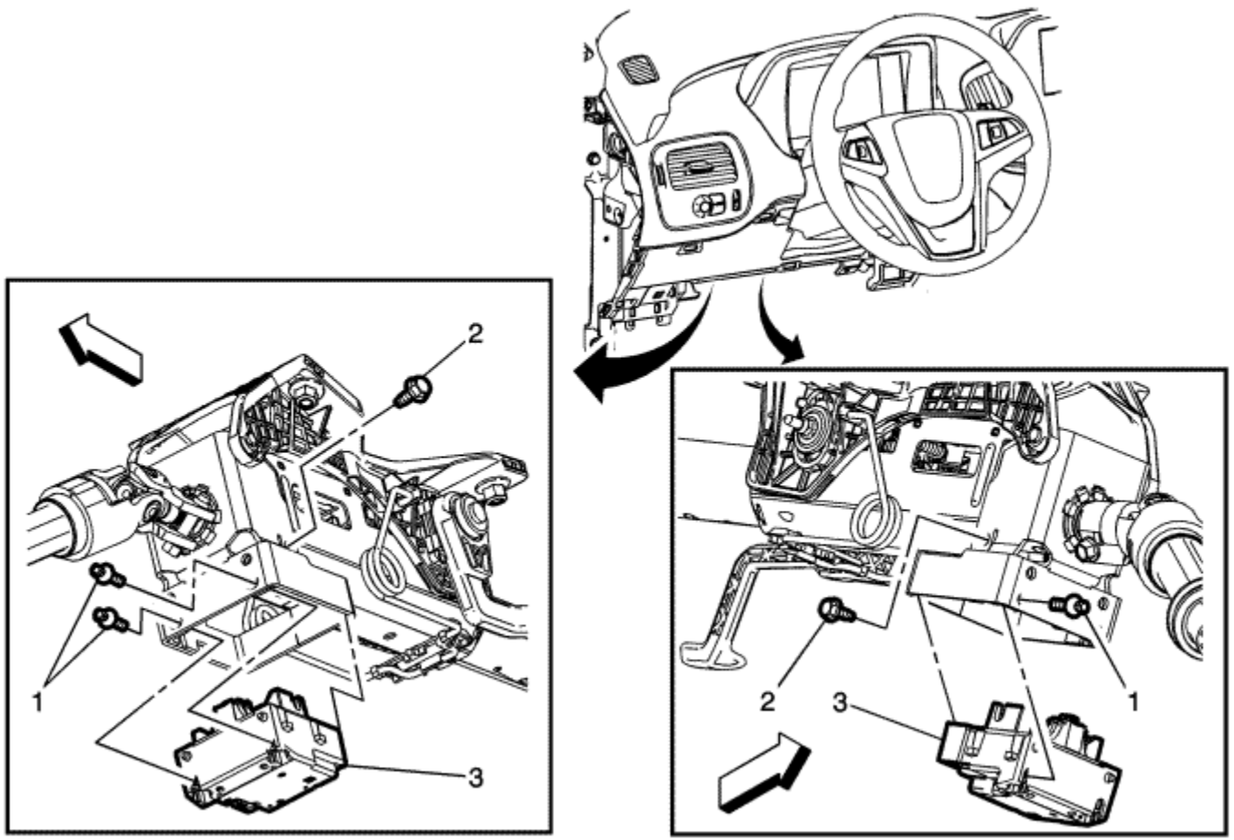

Callout	Component Name

Preliminary Procedures

1. Ensure that the steering wheel and the front wheels are in the straight ahead position.
2. Remove the steering column opening lower filler. Refer to Steering Column Opening Lower Filler Replacement .
3. With your foot off of the brake pedal and the shift lever in the PARK position, press the ignition and start switch once. This will place the ignition system in the

ACCESSORY (ACC) mode and unlock the steering column for 5 minutes.
4. Turn the steering wheel in order to verify the steering column is not locked.
5. Disconnect any electrical connectors as necessary.
6. With your foot off of the brake pedal and the shift lever in the PARK position, press the ignition and start switch once. This will place the ignition system in the OFF mode. With the electrical connector disconnected, the steering column lock module will remain in the unlocked position.

1	Steering Column Lock Control Module Bolt (Qty: 2) **Caution:** Refer to Fastener Caution in the Preface section. **Procedure** **Note:** The 2 steering column lock control module bolts on the forward end of the steering column lock control module are shear bolts. 1. Use any of the following common tools in order to remove the bolts: • An angle grinder and a screwdriver • A hammer and a chisel • A screw extractor • A centre punch 2. Discard the old bolts. 3. Install 2 NEW bolts and tighten until the bolt heads break off.
2	Steering Column Lock Control Module Bolt (Qty: 2) **Note:** The 2 steering column lock control module bolts on the left and right sides of the steering column lock control module are standard bolts. **Tighten** 9.5 N·m (84 lb in)
3	Steering Column Lock Control Module **Procedure** 1. Disconnect any electrical connectors as necessary. 2. After installation is complete, programme and setup the steering column lock control module. Refer to Control Module References .

&#169© Copyright Chevrolet. All rights reserved

Turn Signal Switch Bracket Replacement

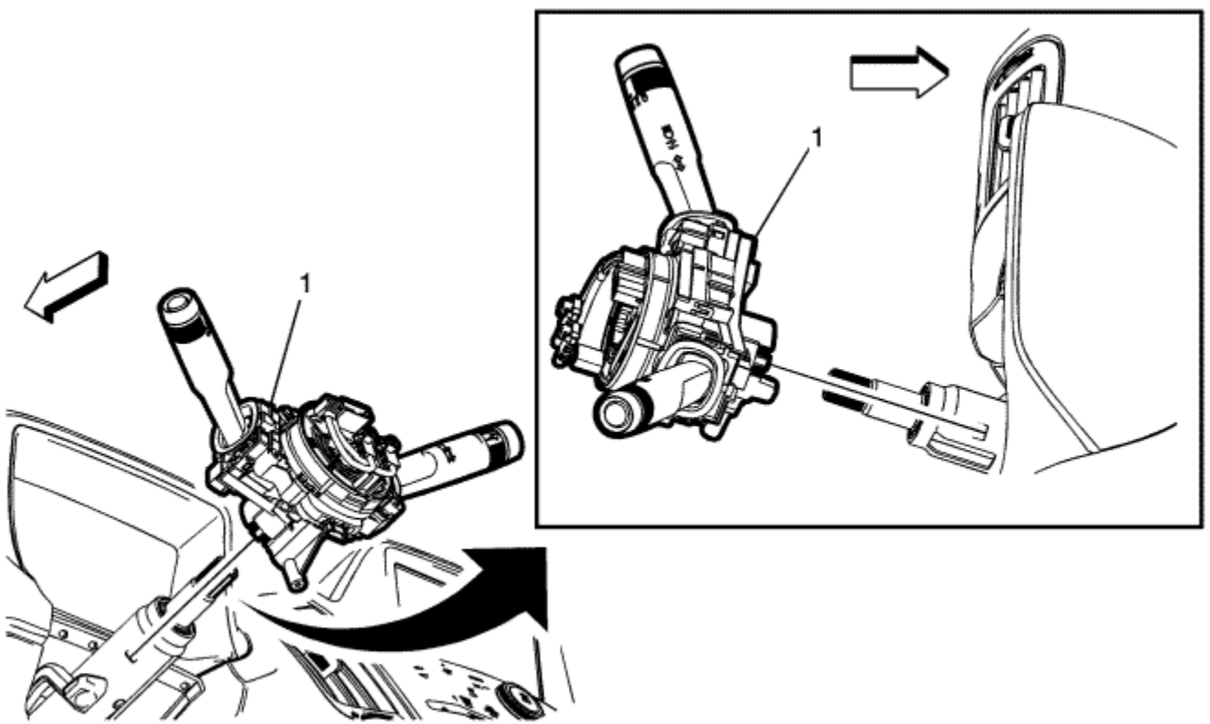

Callout	Component Name
Preliminary Procedures 1. Remove the steering wheel. Refer to Steering Wheel Replacement . 2. Remove the upper trim cover and the lower trim cover from the steering column. Refer to Steering Column Lower Trim Cover Replacement .	

1	Turn Signal Switch Bracket **Procedure** 1. Disconnect any electrical connectors as necessary. 2. Release the 2 tabs in order to release the direction indicator switch bracket from the steering column. 3. Transfer any parts as necessary. Refer to the following procedures: • Turn Signal Multifunction Switch Replacement • Windscreen Wiper and Washer Switch Replacement • Steering Wheel Airbag Coil Replacement • Steering Angle Sensor Replacement

&#169© Copyright Chevrolet. All rights reserved

Turn Signal Multifunction Switch Replacement

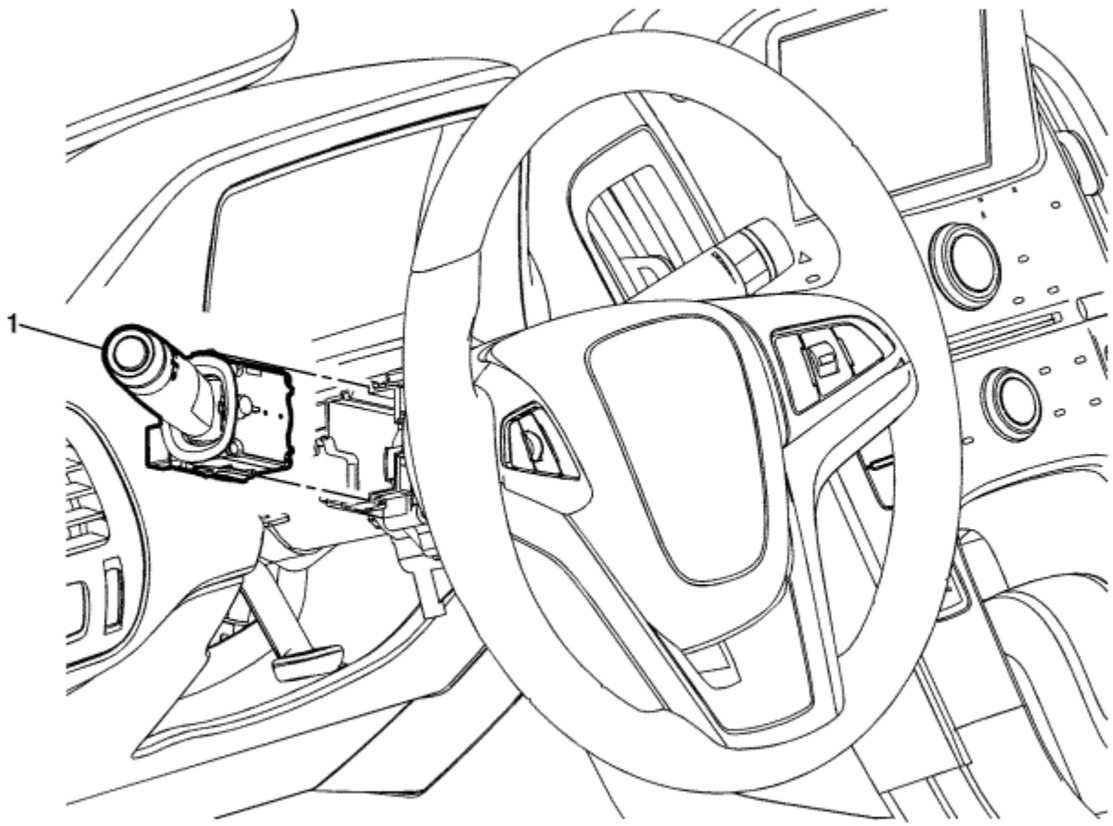

Callout	Component Name
Preliminary Procedure Remove the upper trim cover and the lower trim cover from the steering column. Refer to Steering Column Lower Trim Cover Replacement .	
	Indicator Switch

1	**Procedure** 1. Disconnect any electrical connectors as necessary. 2. Release the plastic retaining tabs and remove the direction indicator multifunction switch from the direction indicator switch bracket.

© Copyright Chevrolet. All rights reserved

Steering Wheel Replacement

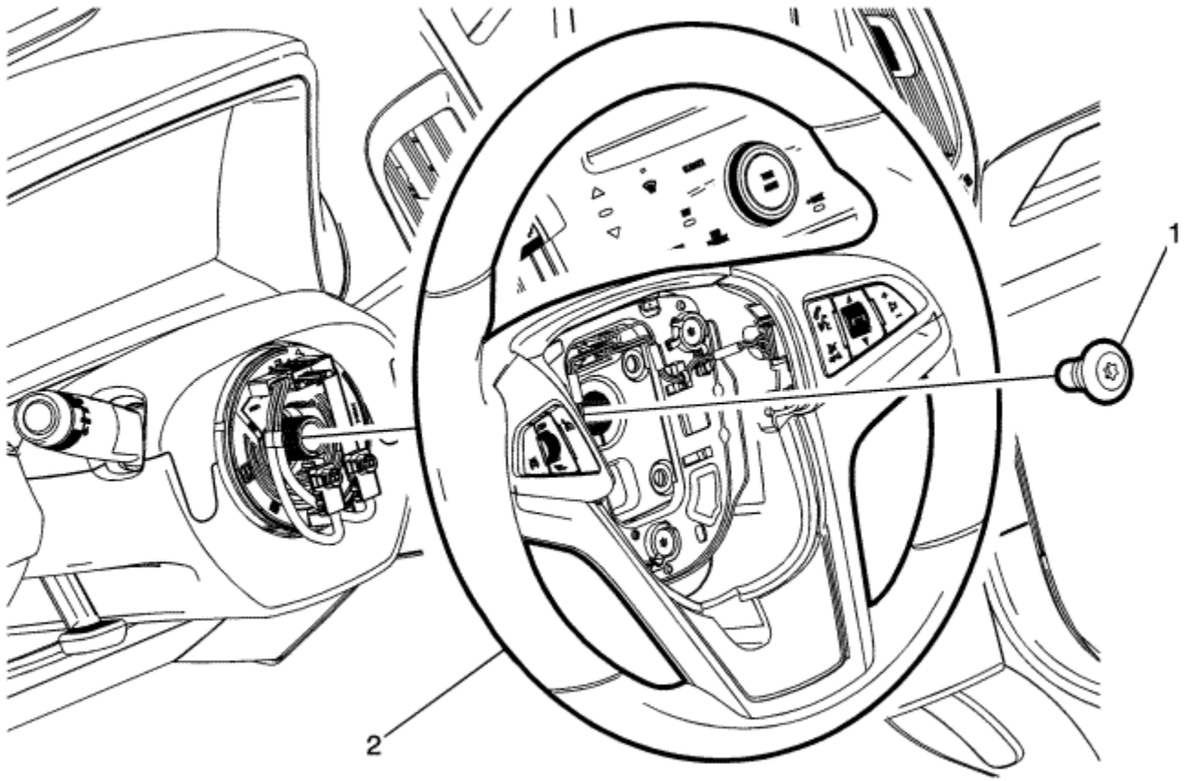

Callout	Component Name
Preliminary Procedure Remove the steering wheel inflatable restraint module. Refer to Steering Wheel Inflatable Restraint Module Replacement .	
	Steering Wheel Bolt

1	**Caution:** Refer to Fastener Caution in the Preface section. **Tighten** 30 N·m (22 lb ft)
2	Steering Wheel **Procedure** 1. Disconnect any electrical connectors as necessary. 2. Loosen the steering wheel bolt until 2 to 3 threads are left engaged. 3. Wiggle the steering wheel until the steering wheel disengages completely. 4. Remove the steering wheel bolt. 5. Ensure that there are match marks on the steering wheel and on the steering column shaft. 6. Remove the steering wheel. 7. Transfer any parts as necessary. Refer to Steering Wheel Spoke Lower Cover Replacement as necessary.

© Copyright Chevrolet. All rights reserved

Steering Wheel Spoke Lower Cover Replacement

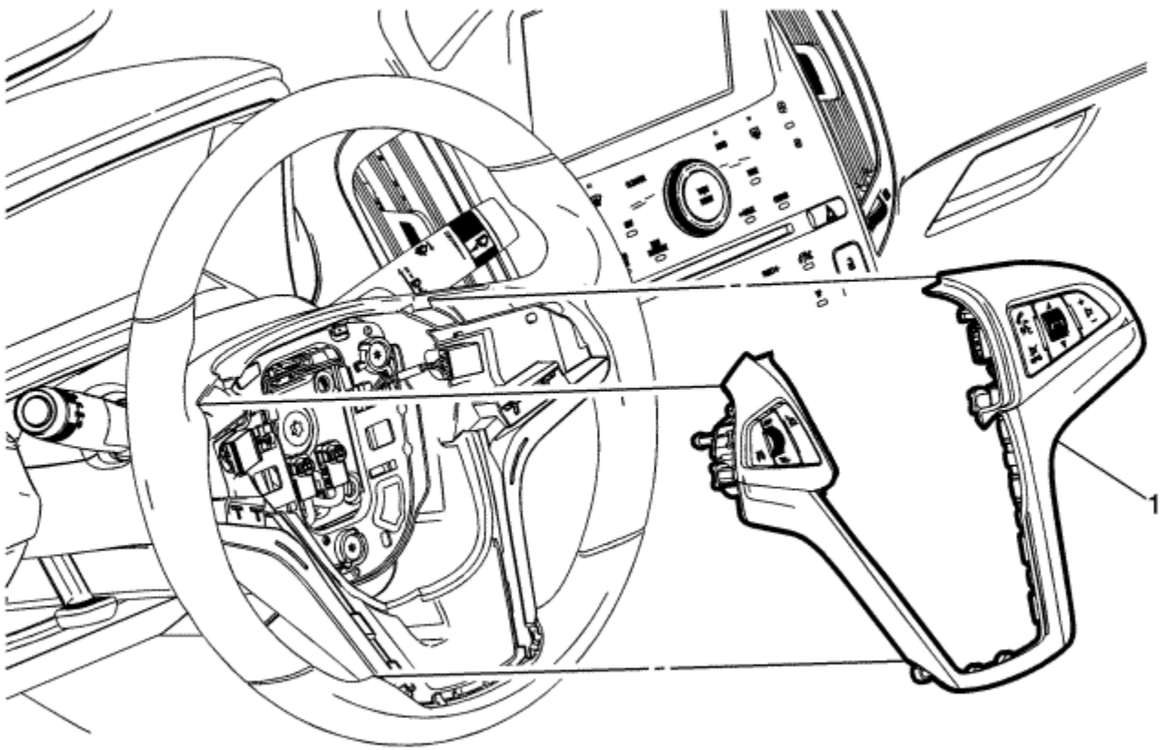

Callout	Component Name
Preliminary Procedure Remove the steering wheel inflatable restraint module. Refer to Steering Wheel Inflatable Restraint Module Replacement .	
	Steering Wheel Lower Cover

1	**Procedure** 1. Use a trim tool in order to remove the steering wheel lower cover and the components covering the spokes of the steering wheel. 2. Disconnect any electrical connectors as necessary. 3. Remove the cruise control switch. Refer to Cruise Control Switch Replacement . 4. Remove the radio and telephone control switch. Refer to Radio and Telephone Control Switch Replacement . 5. Transfer any parts as necessary.

© Copyright Chevrolet. All rights reserved

Steering Column Replacement

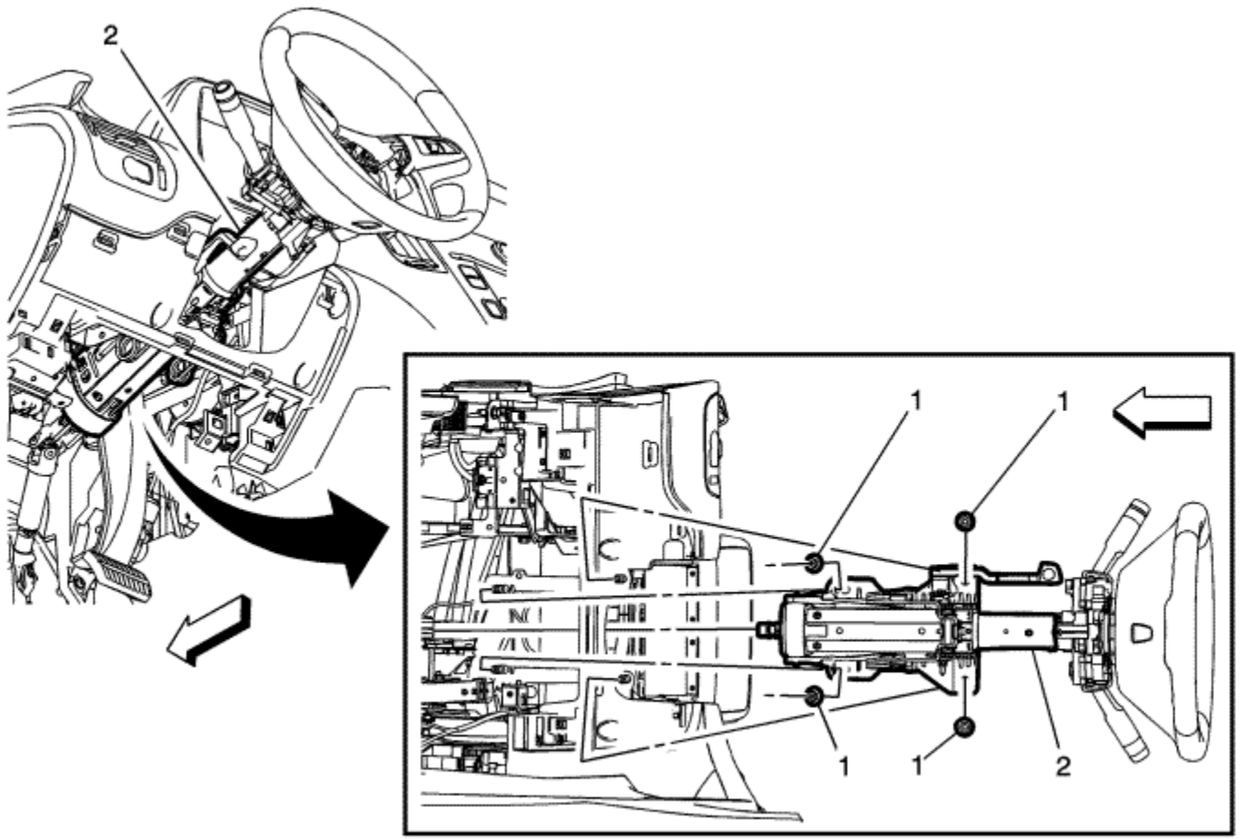

Callout	Component Name
Caution: With wheels of the vehicle facing straight ahead, secure the steering wheel utilizing steering column anti-rotation pin, steering column lock, or a strap to prevent rotation. Locking of the steering column will prevent damage and a possible malfunction of the SIR system. The steering wheel must be secured in position before disconnecting the following components: • The steering column • The steering shaft coupling	

- The intermediate shaft(s)

After disconnecting these components, do not rotate the steering wheel or move the front tyres and wheels. Failure to follow this procedure may cause the SIR coil assembly to become un-centred and cause possible damage to the SIR coil. If you think the SIR coil has became uncentred, refer to your specific SIR coil's centring procedure to re-centre SIR Coil.

Preliminary Procedures

1. With the front wheels in the straight ahead position, secure the steering wheel.
2. Disable the supplemental inflatable restraint system. Refer to SIR Disabling and Enabling .
3. Remove the upper trim cover and the lower trim cover from the steering column. Refer to Steering Column Lower Trim Cover Replacement .
4. Remove the driver's knee air bag and the steering column opening lower filler. Refer to Steering Column Opening Lower Filler Replacement .
5. Use paint in order to place match marks on the steering column shaft and on the intermediate steering shaft.
6. Disconnect the intermediate steering shaft from the steering column. Refer to Intermediate Steering Shaft Replacement .

1	Steering Column Nut (Qty: 4) **Caution:** Refer to Fastener Caution in the Preface section. **Tip** The steering column nut attaches to a stud that is welded to a bracket. **Tighten** 22 N·m (16 lb ft)
2	Steering Column **Caution:** Once the steering column is removed from the vehicle, the column is extremely susceptible to damage. Dropping the column assembly on the end could collapse the steering shaft or loosen the plastic injections, which maintain column rigidity. Leaning on the column assembly could cause the jacket to bend or deform. Any of the above damage could impair the column's collapsible design. Do NOT hammer on the end of the shaft, because hammering could loosen the plastic injections, which maintain column rigidity. If you need to remove the steering wheel, refer to the Steering Wheel Replacement procedure in this section. **Procedure** 1. Disconnect any electrical connectors as necessary. 2. Push the steering column down on the lower instrument panel retainer in order to clear the studs. 3. Transfer any parts as necessary. Refer to the following procedures as necessary: • Steering Wheel Inflatable Restraint Module Replacement • Steering Wheel Replacement • Turn Signal Switch Bracket Replacement • Turn Signal Multifunction Switch Replacement

- Windscreen Wiper and Washer Switch Replacement
- Steering Wheel Airbag Coil Replacement
- Steering Angle Sensor Replacement

4. If you are replacing the steering column, copy the match marks from the old steering column to the new steering column.
5. After installation, center the steering angle sensor. Refer to Steering Angle Sensor Centreing .

&#169© Copyright Chevrolet. All rights reserved

Steering Angle Sensor Replacement

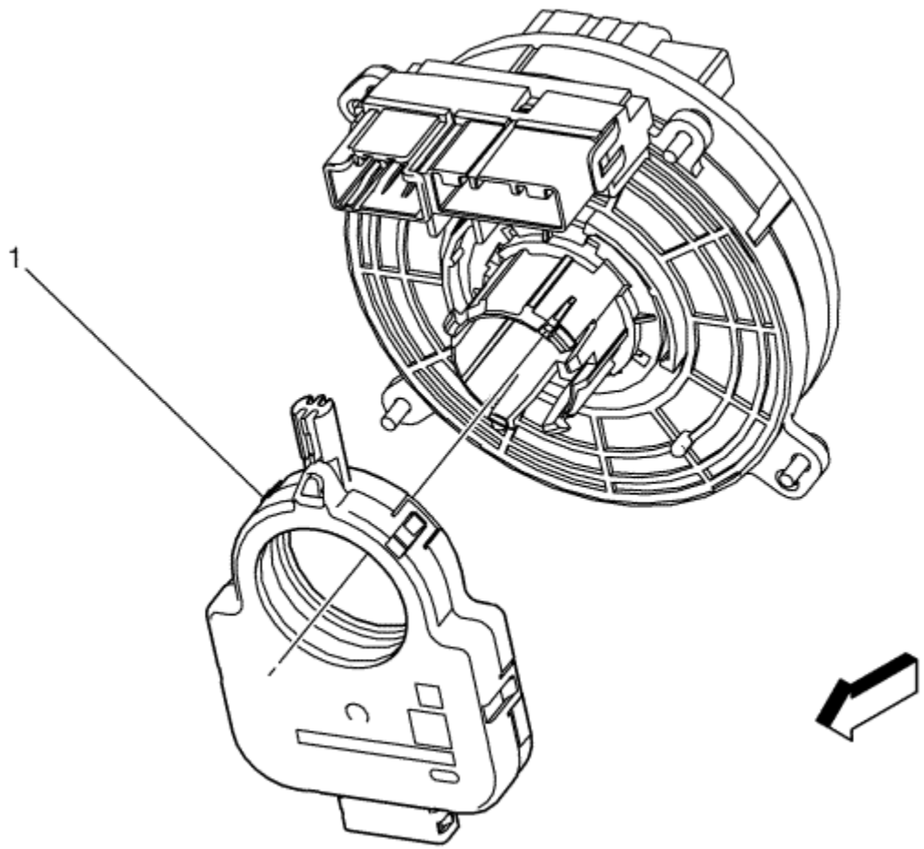

Callout	Component Name
Preliminary Procedure Remove the steering wheel airbag coil. Refer to Steering Wheel Airbag Coil Replacement .	
	Steering Angle Sensor

1	**Procedure** 1. Press in the clip on the steering wheel airbag coil in order to remove the steering angle sensor. 2. After the installation is complete, centre the steering angle sensor. Refer to Steering Angle Sensor Centring .

© Copyright Chevrolet. All rights reserved

Steering Wheel and Column Description and Operation

Steering Column Lock

The Steering Column Lock Module (SCLM) controls the steering wheel theft deterrent lock function, which allows the column to be electronically locked. When a valid key is used to start the vehicle, the BCM recognises this and will send the encrypted password to the SCLM. The SCLM will compare its own stored password to the encrypted password sent by the BCM. If the data matches, the steering column will be unlocked.

In order for the steering column to be locked the SCLM has to see 3 inputs.

1. The BCM power mode is OFF.
2. The vehicle is stationary based on zero speed reported from all ABS wheel speed sensors.
3. The driver or passenger door is opened reported by the PEPS module.

When the SCLM receives these inputs, the steering column will be locked.

The SCLM monitors the column lock system and will set DTC codes when the module detects malfunctions within the system. When a malfunction occurs the driver information centre (DIC) will display the Service Column Lock Now message indicating DTC codes are set within the SCLM.

Driver Safety

The steering wheel and column has safety features to protect the driver. The following components may be mounted on or near the steering column:

Energy-Absorbing Steering Column: The energy-absorbing steering column compresses in the event of a front-end collision, which reduces the chance of injury to the driver. The energy-absorbing feature, collapsible steering shaft, and break away mounting features help reduce the injury in the event of an accident.

Heated Steering Wheel

The heated steering wheel system consists of a heated steering wheel, a heated steering wheel switch, and a steering wheel heat module. The heated steering wheel includes non-serviceable heating elements and a temperature sensor. The heating elements and sensor are located in the left and right sides of the rim of the steering wheel. The heated steering wheel switch is located in the left steering wheel control switch assembly. The steering wheel heat control module is located at the bottom of the steering wheel centre hub. When the switch is pressed, the switch signal circuit is earthed and the heat module turns the heated steering wheel on. The system then remains on until the customer turns it off. The wheels normal operating temperature is 32°C (89.6°F). The wheel takes approximately 3 to 4 minutes to reach the normal operating temperature. The wheel will take longer to heat up if the vehicle temperature is below -21°C (-5.8°F). The built-in temperature sensor provides input to the controller to limit the temperature to normal operating temperature. The wheel will not operate if the vehicle temperature is at or above 32°C (89.6°F).

© Copyright Chevrolet. All rights reserved

Fastener Tightening Specifications

Application	Specification	
	Metric	English
Front Lower Control Arm Bushing Bolt (1)		
First Pass	55 N·m	41 lb ft
Final Pass	plus 100 degrees	
Front Lower Control Arm Rear Mount Bolts (1)		
First Pass	70 N·m	52 lb ft
Final Pass	plus 85 degrees	
Front Lower Control Arm Bolt at the Frame (1)		
First Pass	70 N·m	52 lb ft
Final Pass	plus 80 degrees	
Front Stabiliser Shaft Link Nuts (2)	65 N·m	48 lb ft
Front Stabiliser Shaft Insulator Bolts (1)		
First Pass	22 N·m	16 lb ft
Final Pass	plus 40 degrees	
Front Strut Nuts (at the knuckle) (2)		
First Pass	85 N·m	63 lb ft
Final Pass	plus 65 degrees	
Front Strut Nut (at the upper mount)	70 N·m	52 lb ft
Front Strut Shaft Nut	45 N·m	33 lb ft

Front Wheel Bearing and Hub Bolts		
First Pass	100 N·m	74 lb ft
Final Pass	plus 60 degrees	
Lower Control Arm Ball Joint Nut (1)		
First Pass	50 N·m	37 lb ft
Second Pass	loosen 120 degrees	
Third Pass	50 N·m	37 lb ft
Final Pass	plus 35 degrees	

1. (1) Use only NEW Bolts
2. (2) Use only NEW Nuts

© Copyright Chevrolet. All rights reserved

Stabiliser Shaft Replacement

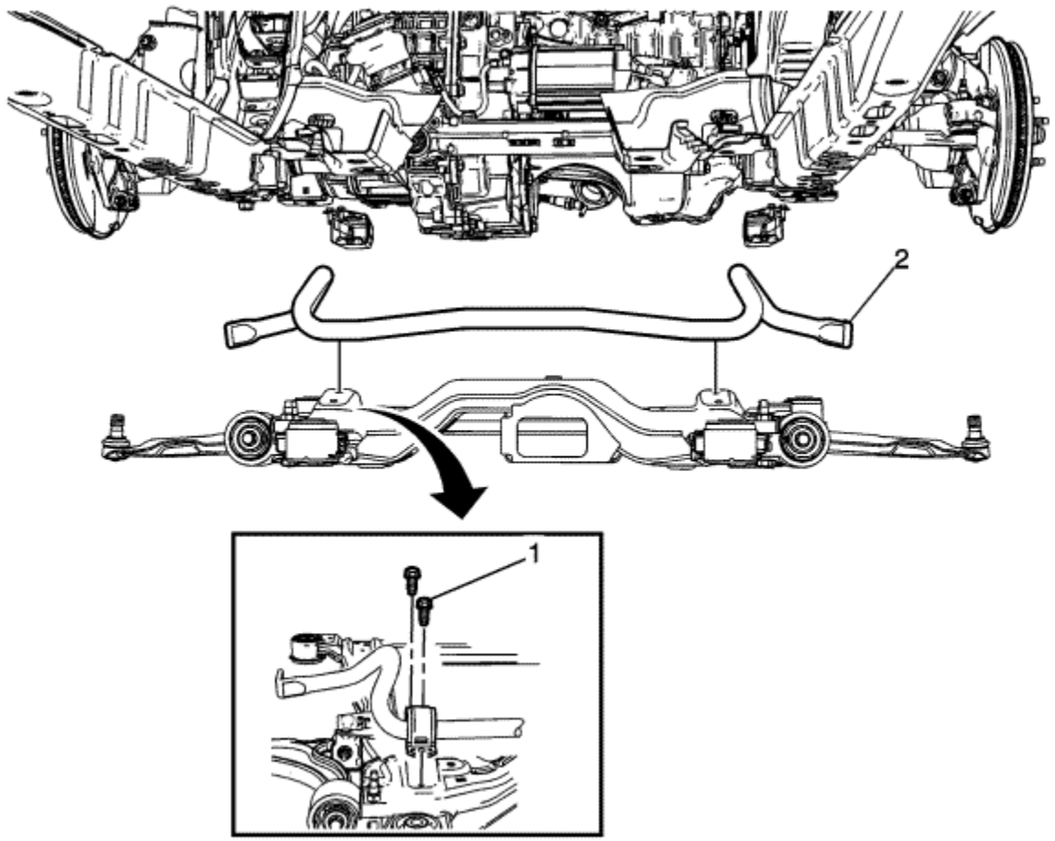

Callout	Component Name
Preliminary Procedure	
1. Raise and support the vehicle. Refer to Lifting and Jacking the Vehicle . 2. Remove the stabiliser shaft link from the stabiliser shaft. Refer to Stabilizer Shaft Link Replacement .	

1	Front Stabiliser Shaft Insulator Clamp Bolt (Qty: 2) **Warning:** This component is equipped with torque-to-yield fasteners. Install a NEW torque-to-yield fastener when installing this component. Failure to replace the torque-to-yield fastener could cause bodily injury and damage to the vehicle or component. **Caution:** This component is equipped with torque-to-yield fasteners. Install a NEW torque-to-yield fastener when installing this component. Failure to replace the torque-to-yield fastener could cause damage to the vehicle or component. **Caution:** Refer to Fastener Caution in the Preface section. **Procedure** Lower the Drivetrain and Front Suspension Frame Assembly. Refer to Drivetrain and Front Suspension Frame Replacement . **Tip** Lower the front suspension frame assembly enough to gain access to the stabiliser shaft insulator bolts. **Tighten** 1. First Pass: 22 N·m (16 lb ft). 2. Final Pass: 40 degrees.
2	Front Stabiliser Shaft **Tip** The stabiliser shaft insulator and the clamps are serviced with the stabiliser shaft. They are Not service separately.

© Copyright Chevrolet. All rights reserved

Stabilizer Shaft Link Replacement

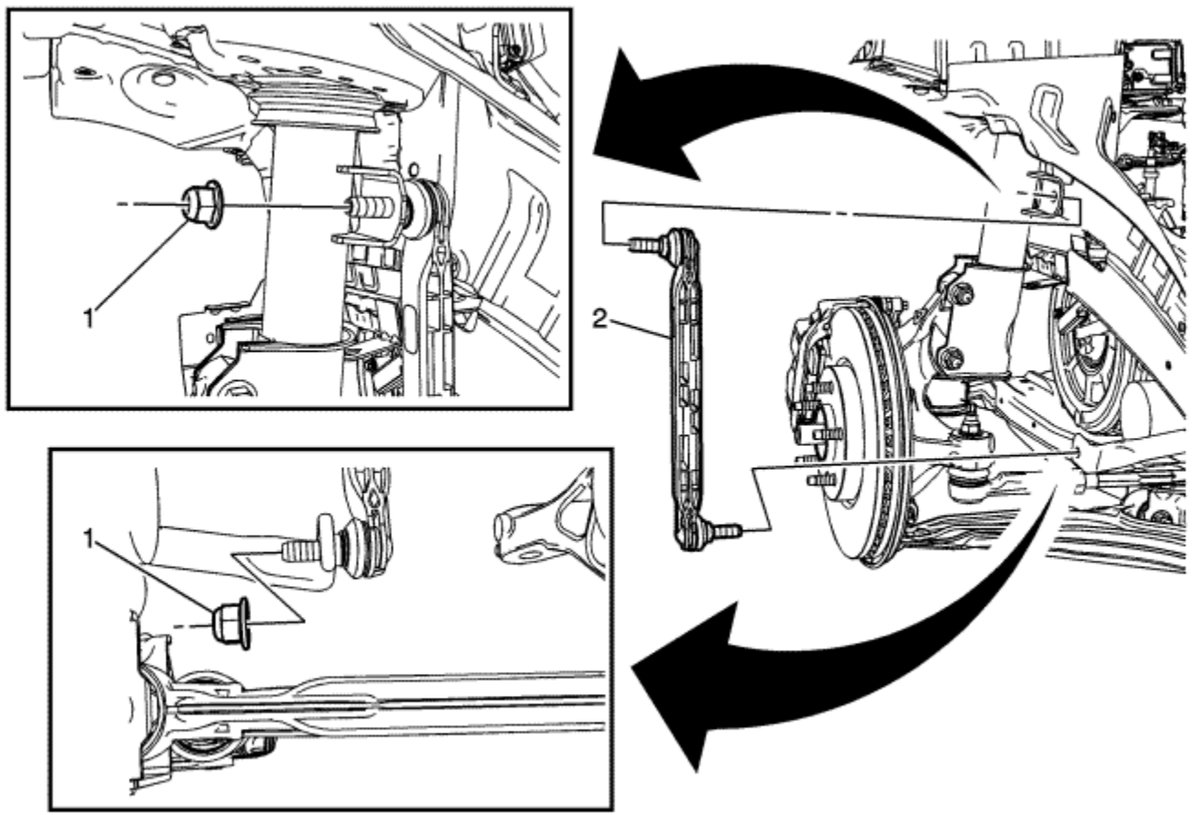

Callout	Component Name
Preliminary Procedure 1. Raise and support the vehicle. Refer to Lifting and Jacking the Vehicle . 2. Remove the tyre and wheel assembly. Refer to Tyre and Wheel Removal and Installation .	

1	Front Stabiliser Shaft Nut (Qty: 2) **Caution:** Refer to Fastener Caution in the Preface section. **Procedure** 1. Using the proper size allen key, hold the stabiliser shaft link ball stud while removing the stabiliser shaft nut. 2. Remove and discard the nut. DO NOT re-use the nut, replace with NEW only. **Tighten** 65 N·m (48 lb ft)
2	Front Stabiliser Shaft Link **Caution:** This component is equipped with torque-to-yield fasteners. Install a NEW torque-to-yield fastener when installing this component. Failure to replace the torque-to-yield fastener could cause damage to the vehicle or component.

© Copyright Chevrolet. All rights reserved

Front Wheel Bearing and Hub Replacement

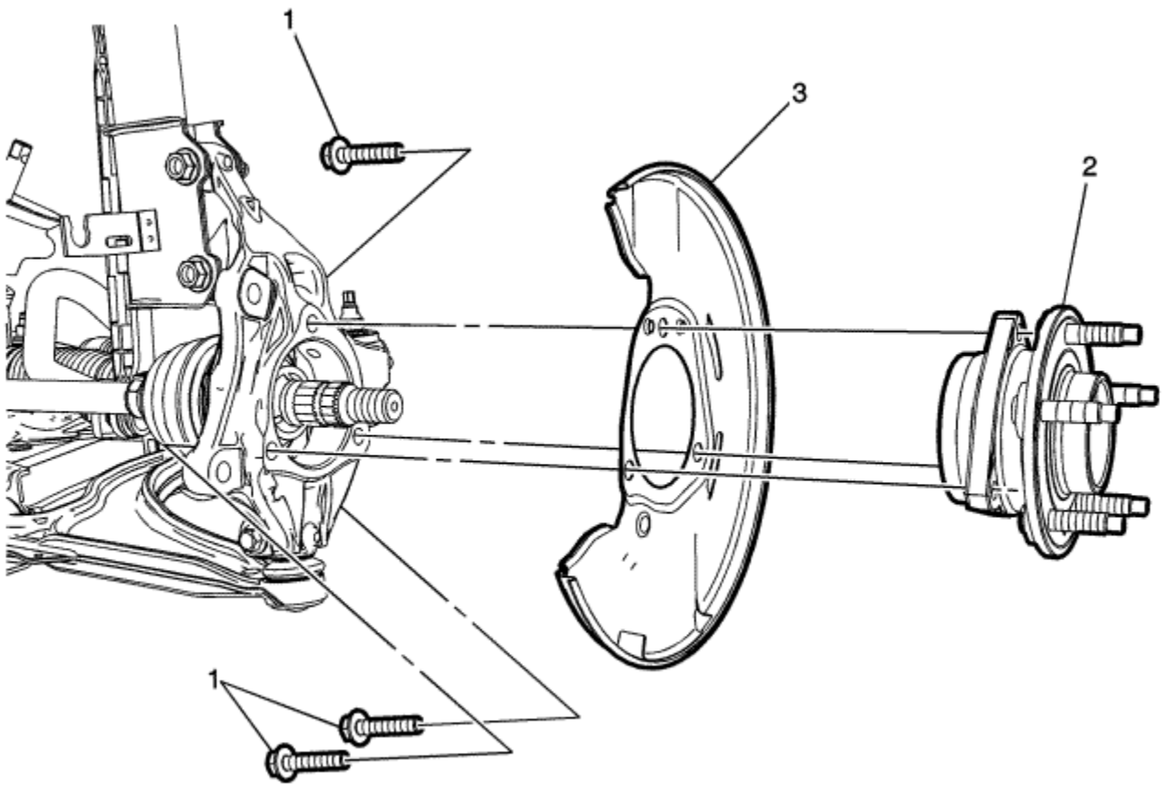

Callout	Component Name
Preliminary Procedure	

1. Raise and support the vehicle. Refer to Lifting and Jacking the Vehicle .
2. Remove the tyre and wheel assembly. Refer to Tyre and Wheel Removal and Installation .
3. Remove the wheel speed sensor. Refer to Front Wheel Speed Sensor Replacement .

4. Remove the front brake rotor. Refer to Front Brake Disc Replacement .
5. Remove the wheel drive shaft nut from the wheel drive shaft. Refer to Front Wheel Drive Shaft Replacement .

1	Front Wheel Hub Bolt (Qty: 3) **Warning:** Refer to Torque-to-Yield Fastener Warning in the Preface section. **Caution:** Refer to Fastener Caution in the Preface section. **Procedure** Remove and discard the bolt and replace with NEW only. **Tighten** 1. First Pass: 100 N·m (74 lb ft). 2. Final Pass: additional 60 degrees.
2	Front Wheel Hub.
3	Front Brake Shield

© Copyright Chevrolet. All rights reserved

Steering Knuckle Replacement

Removal Procedure

1. Raise and support the vehicle. Refer to Lifting and Jacking the Vehicle .
2. Remove the tyre and wheel assembly. Refer to Tyre and Wheel Removal and Installation .
3. Remove the wheel bearing and hub assembly. Refer to Front Wheel Bearing and Hub Replacement .
4. Remove the front suspension strut bolts from the knuckle. Refer to Strut Assembly Removal and Installation .

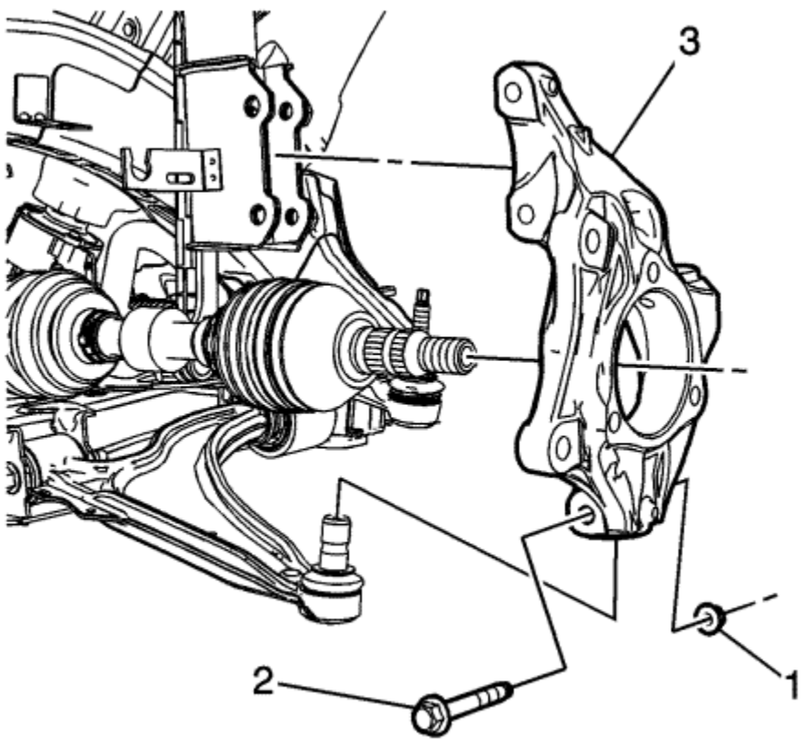

5. Remove and discard the lower ball joint nut (1) and the bolt (2) from the steering knuckle. Replace with NEW only.

Caution: Do not free the ball stud by using a pickle fork or a wedge-type tool. Damage to the seal or bushing may result.

Caution: This component is equipped with torque-to-yield fasteners. Install a NEW torque-to-yield fastener when installing this component. Failure to replace the torque-to-yield fastener could cause damage to the vehicle or component.

6. DO NOT use any type of pry bars or power tools to separate ball joint from the steering knuckle.
7. Remove the steering knuckle (3) from the vehicle.

Installation Procedure

1. Position the steering knuckle in the front suspension strut and in the lower control arm.

Caution: Refer to Fastener Caution in the Preface section.

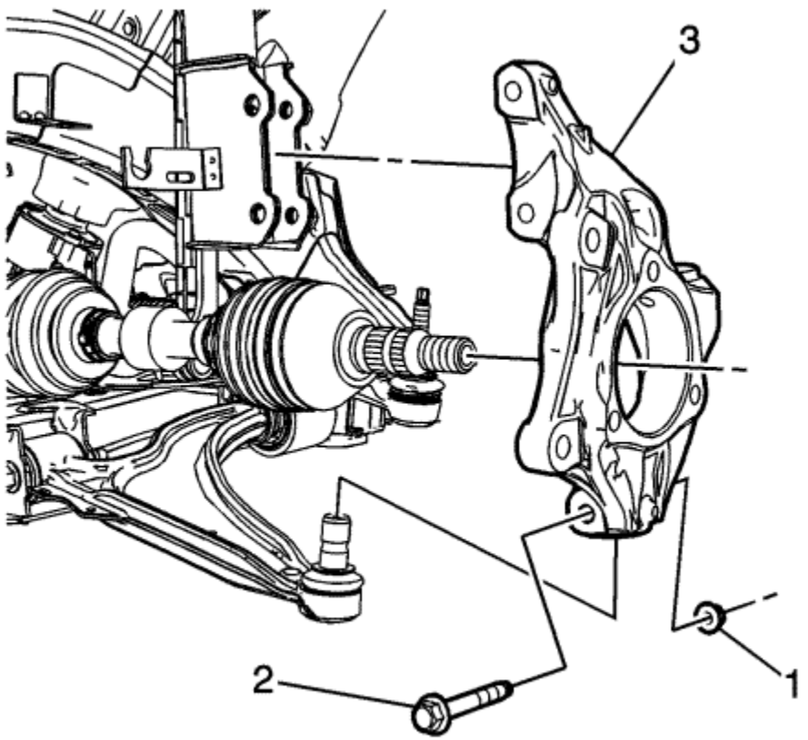

Caution: This component is equipped with torque-to-yield fasteners. Install a NEW torque-to-yield fastener when installing this component. Failure to replace the torque-to-yield fastener could cause damage to the vehicle or component.

2. Install the lower ball joint nut (1) and the NEW bolt (2) in the steering knuckle and tighten:
   - **First Pass: 50 N·m (37 lb ft)**
   - **Second Pass: loosen 120 degrees**
   - **Third Pass: 50 N·m (37 lb ft)**
   - **Final Pass: additional 35 degrees**

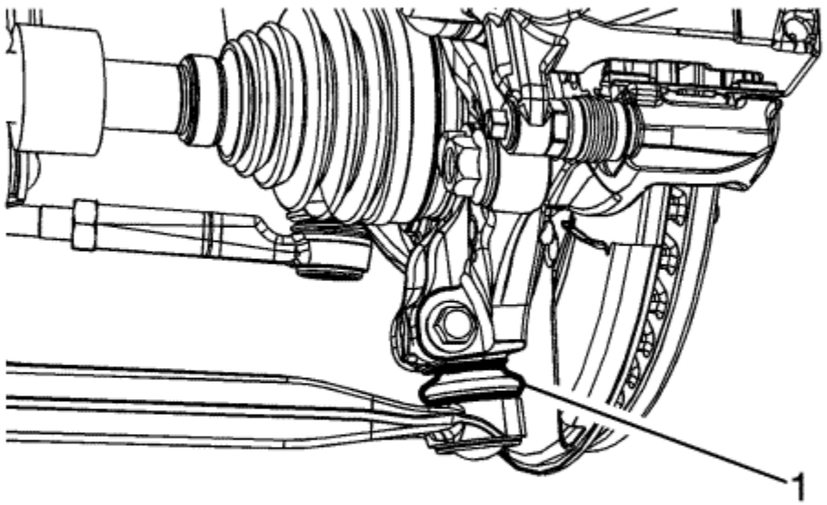

3. Ensure that the ball joint boot (1) is properly seated between the lower control arm and the knuckle.
4. Install the front suspension strut bolts in the steering knuckle. Refer to Strut Assembly Removal and Installation .
5. Install the wheel bearing and hub assembly. Refer to Front Wheel Bearing and Hub Replacement
6. Install the tyre and wheel assembly. Refer to Tyre and Wheel Removal and Installation .
7. Remove the supports and lower the vehicle.

&#169© Copyright Chevrolet. All rights reserved

Lower Control Arm Replacement

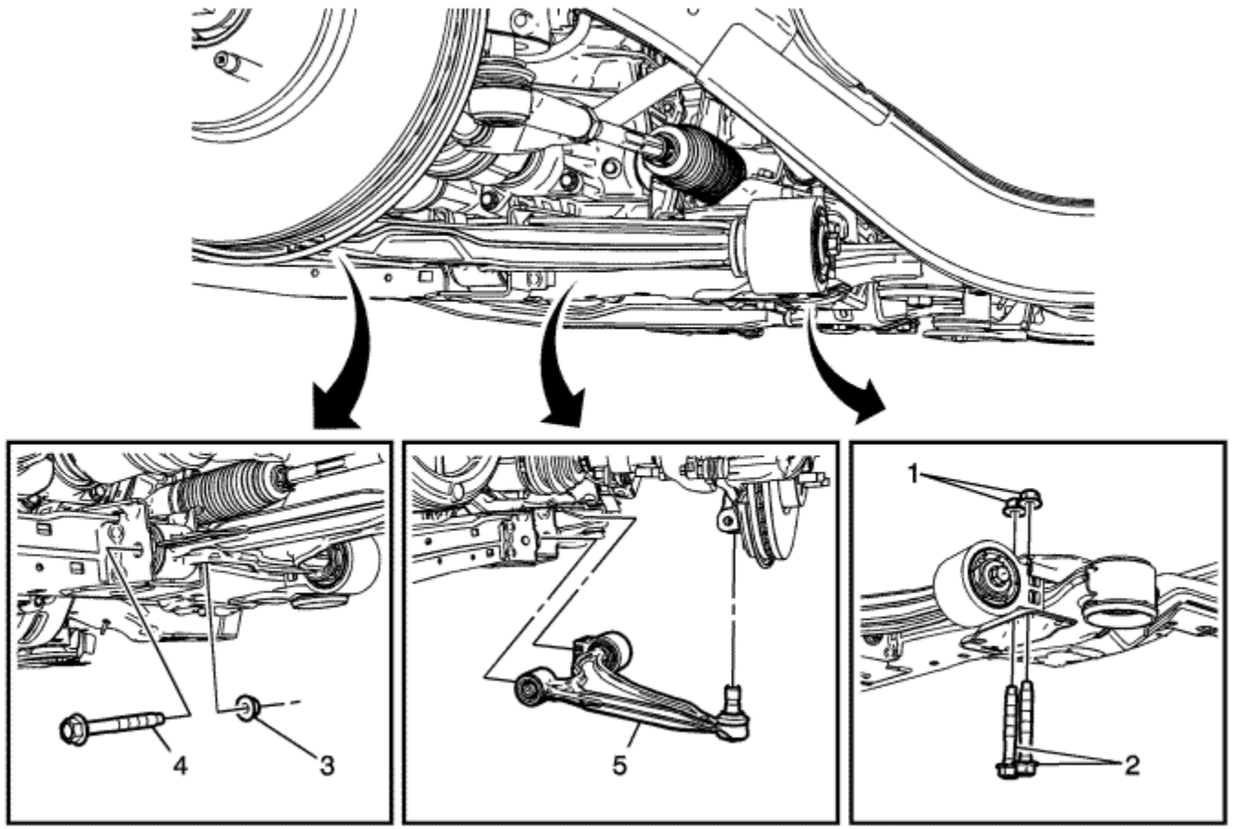

Callout	Component Name

Preliminary Procedure

1. Raise and support the vehicle. Refer to Lifting and Jacking the Vehicle .
2. Remove the tyre and wheel assembly. Refer to Tyre and Wheel Removal and Installation .
3. Remove the wheel house splash shield. Refer to Front Wheelhouse Front Liner Replacement .

4. If servicing the right wheel drive shaft, reposition the heater water auxiliary pump to the side. DO NOT drain the cooling system. Refer to Heater Water Auxiliary Pump Replacement

1	Front Lower Control Rear Mount Nut (Qty: 2)
2	Front Lower Control Rear Mount Bolt (Qty: 2) **Caution:** Refer to Fastener Caution in the Preface section. **Procedure** DO NOT re-use the bolts. Discard and replace with NEW only. **Tighten** 1. First Pass: 70 N·m (52 lb ft). 2. Final Pass: plus 85 degrees.
3	Front Lower Control Front Mount Nut
4	Front Lower Control Front Rear Mount Bolt **Procedure** DO NOT re-use the bolts. Discard and replace with NEW only. **Tighten** 1. First Pass: 70 N·m (52 lb ft). 2. Final Pass: plus 85 degrees.
5	Front Lower Control Arm **Procedure** 1. Remove the speed sensor electrical harness from the front lower control arm. 2. Remove the lower control arm from the knuckle. Refer to Steering Knuckle Replacement . **Note:** If removing the lower control arm to service the lower control arm bushing, loosen the bolt before removing the lower control arm. 3. If removing the lower control arm to service the bushing, refer to Front Lower Control Arm Bush Replacement .

© Copyright Chevrolet. All rights reserved

Front Lower Control Arm Bush Replacement

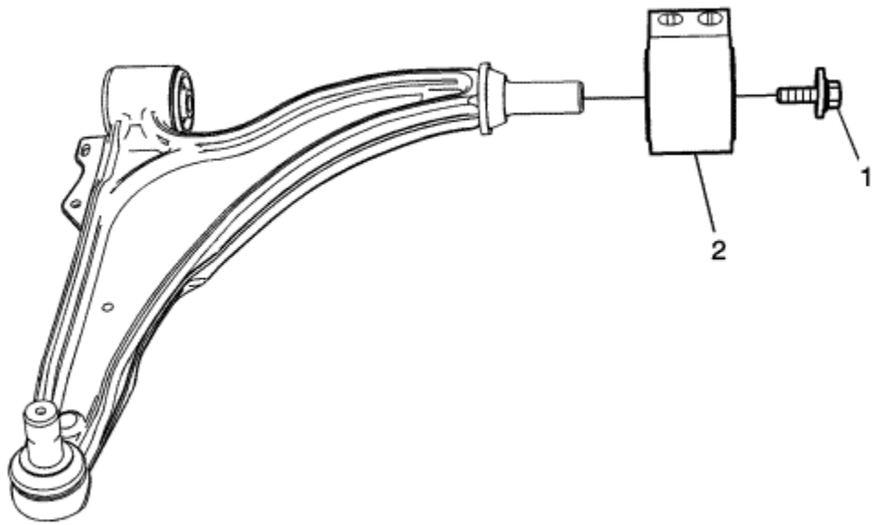

Callout	Component Name
Preliminary Procedure Remove the front lower control arm. Refer to Lower Control Arm Replacement .	
1	Front Lower Control Arm Bushing Bolt **Caution:** Refer to Fastener Caution in the Preface section. **Procedure** 1. Install the lower control arm in a soft jawed vice. 2. Discard the front lower control arm bushing bolt and replace with new ONLY. 3. Tighten the bolt to specifications when the vehicle is sitting on a level surface. **Tighten**

	1. First Pass: 55 N·m (41 lb ft) 2. Final Pass: additional 100 degrees
2	Front Lower Control Arm Rear Bushing

© Copyright Chevrolet. All rights reserved

Wheel Stud Replacement

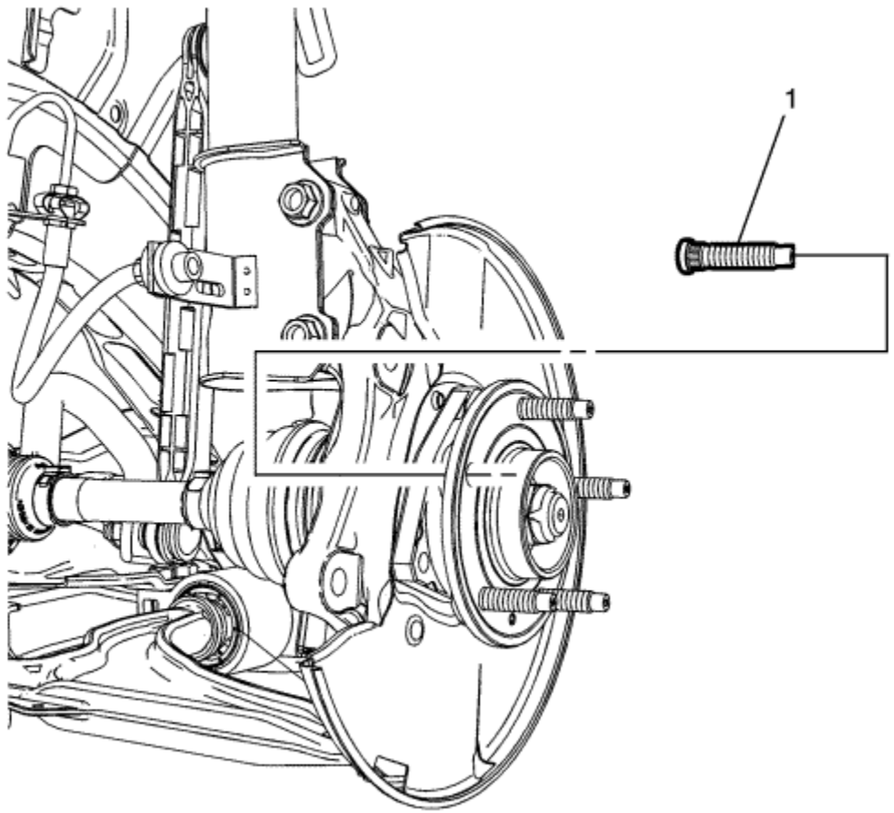

Callout	Component Name
Preliminary Procedure	
1. Raise and support the vehicle. Refer to Lifting and Jacking the Vehicle . 2. Remove the tyre and wheel assembly. Refer to Tyre and Wheel Removal and Installation . 3. Remove the front wheel bearing and hub. Front Wheel Bearing and Hub Replacement .	

1	Wheel Stud (Qty: 5) **Procedure** 1. Rotate the wheel hub so that the wheel stud to be removed is located where the front brake caliper mounts to the knuckle. 2. Using the *CH 43631* remover, remove and discard the wheel stud from the wheel hub. Replace with NEW only. 3. When installing the wheel stud, use the proper amount of washers to allow the wheel stud to be fully seated against the wheel bearing flange. 4. Use a wheel nut with the flat side of the wheel nut facing the washers to fully seat the wheel stud. **Special Tools** *CH 43631* Ball Joint Remover For equivalent regional tools, refer to Special Tools

© Copyright Chevrolet. All rights reserved

Strut Assembly Removal and Installation

Special Tools

CH 35669 Wrench

For regional equivalent tools, refer to Special Tools .

Removal Procedure

1. Remove the air inlet grille panel. Refer to Air Inlet Grille Panel Replacement .
2. Raise and support the vehicle. Refer to Lifting and Jacking the Vehicle .
3. Remove the tyre and wheel assembly. Refer to Tyre and Wheel Removal and Installation .
4. Remove the stabilizer shaft link from the front strut. Refer to Stabilizer Shaft Link Replacement .
5. Remove the front brake hose from the front strut. Refer to Front Brake Hose Replacement .

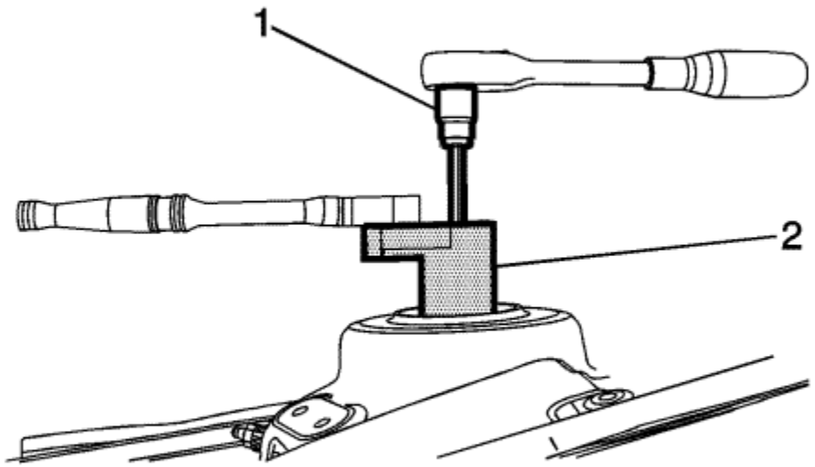

6. Using the *CH 35669* spanner (2) and the Torx® (1), loosen the upper strut nut.

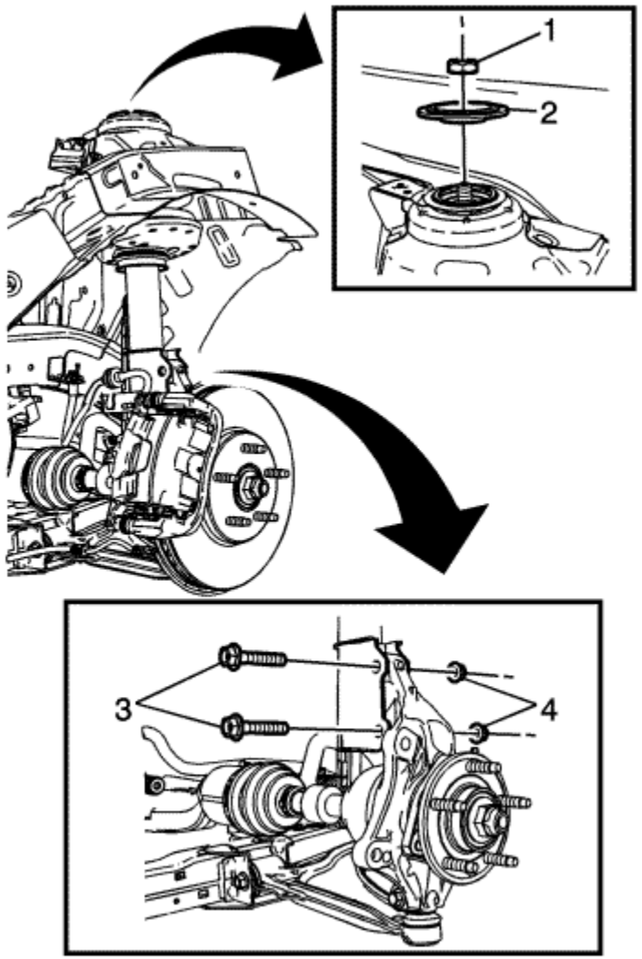

7. Remove the front strut nuts (4) and the front suspension strut mount (3).

   Note: Before removing the front strut assembly, place a clean workshop towel over the wheel drive shaft boot.

8. Remove the front suspension strut mount nut (1) and the front suspension strut mount (2).

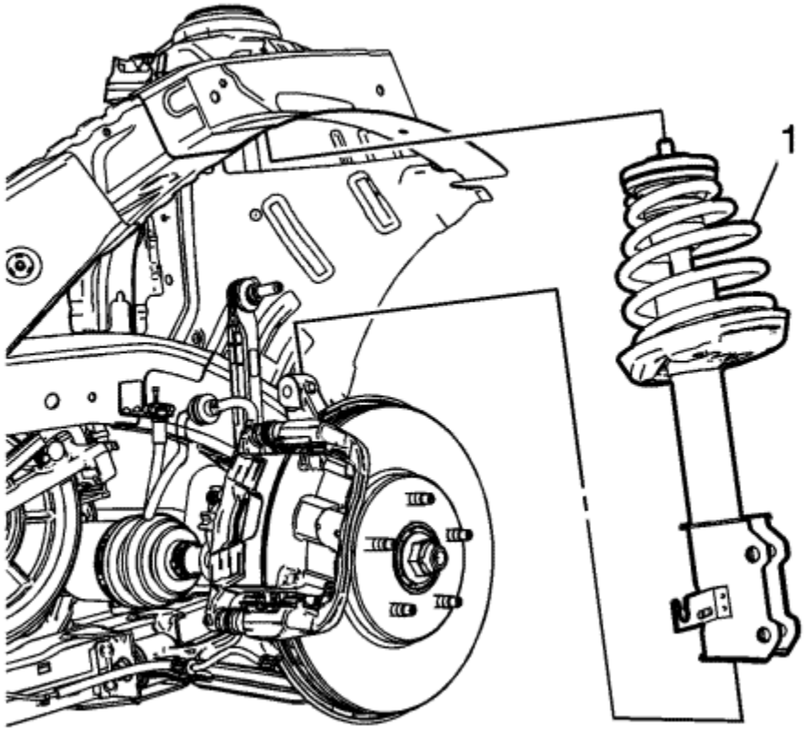

9. Remove the front suspension strut assembly (1).

Installation Procedure

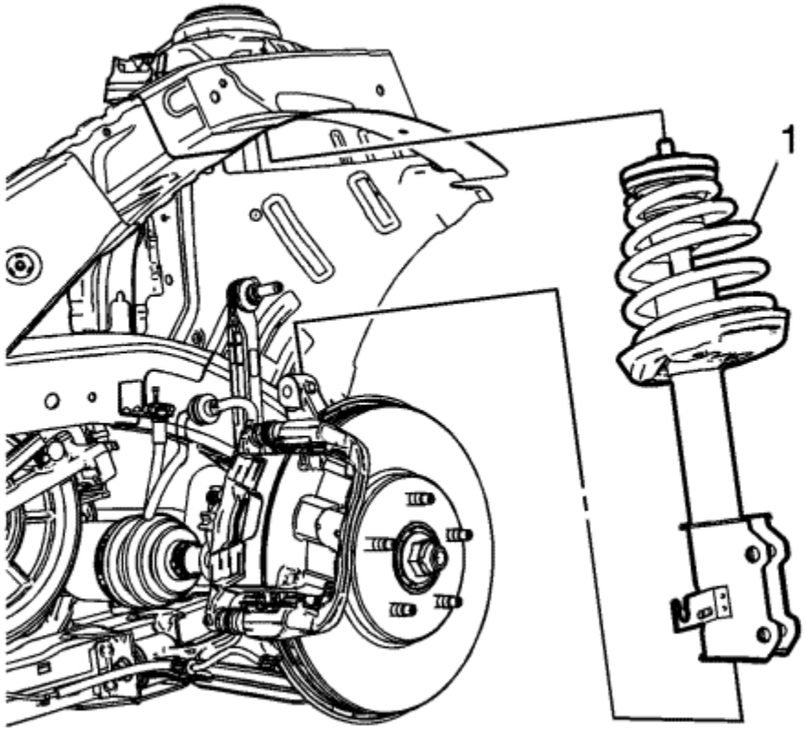

1. Position the front suspension strut assembly (1) in the vehicle.

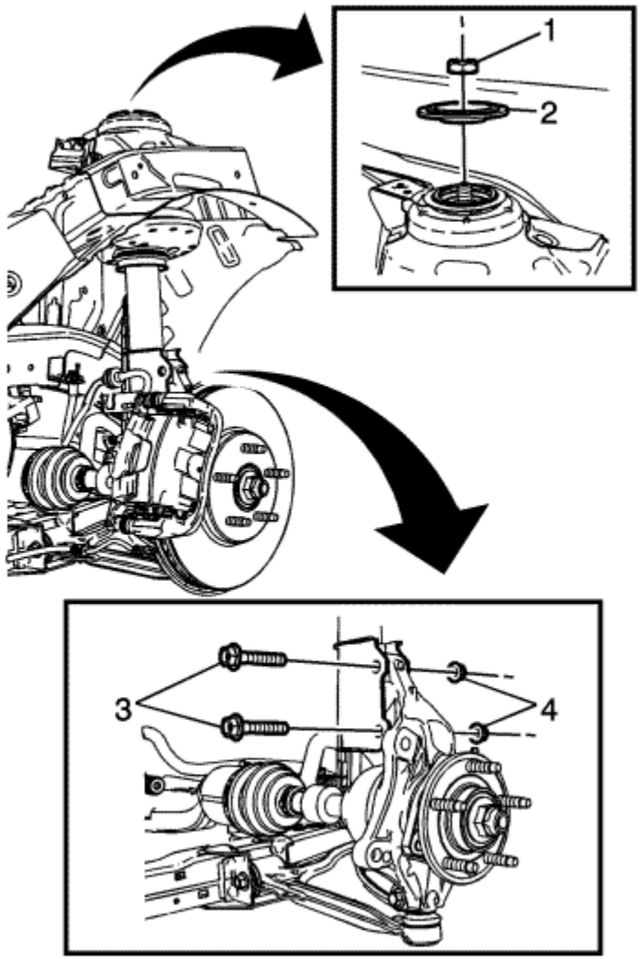

Note: Finger tighten the nut to hold the front suspension strut assembly in place.

2. Install the front suspension strut mount upper mount nut (1) and the front suspension strut mount (2).

   Caution: Refer to Fastener Caution in the Preface section.

3. Install the front suspension strut nuts (4) and bolts (3) and tighten the nuts to:
   3.1. First Pass: **85 N·m (63 lb ft).**
   3.2. Final Pass: **additional 65 degrees.**

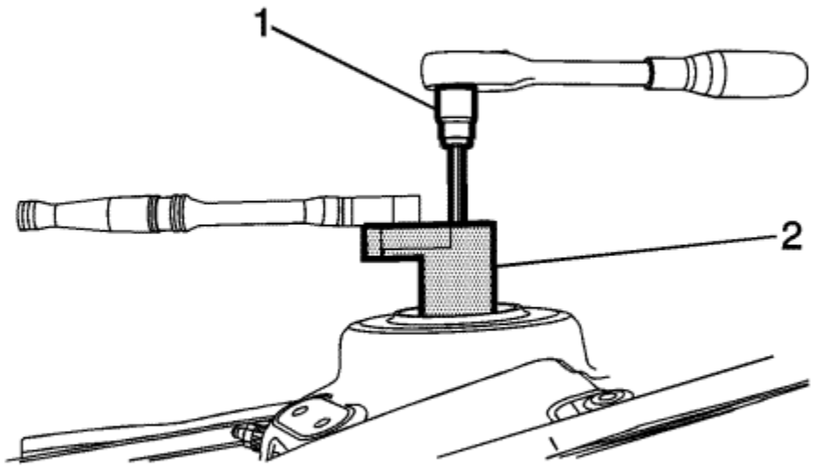

4. Using the *CH 35669* spanner (2) and the TORX® (1), tighten the front suspension strut mounting nut (1) to **45 N·m (33 lb ft)**.
5. Install the stabiliser shaft link to the front suspension strut. Refer to Stabilizer Shaft Link Replacement .
6. Install the front brake hose to the front suspension strut. Refer to Front Brake Hose Replacement
7. Install the tyre and wheel assembly. Refer to Tyre and Wheel Removal and Installation .
8. Remove the support and lower the vehicle.
9. Install the air inlet grille panel. Refer to Air Inlet Grille Panel Replacement

© Copyright Chevrolet. All rights reserved

Suspension Shock/Strut Disposal

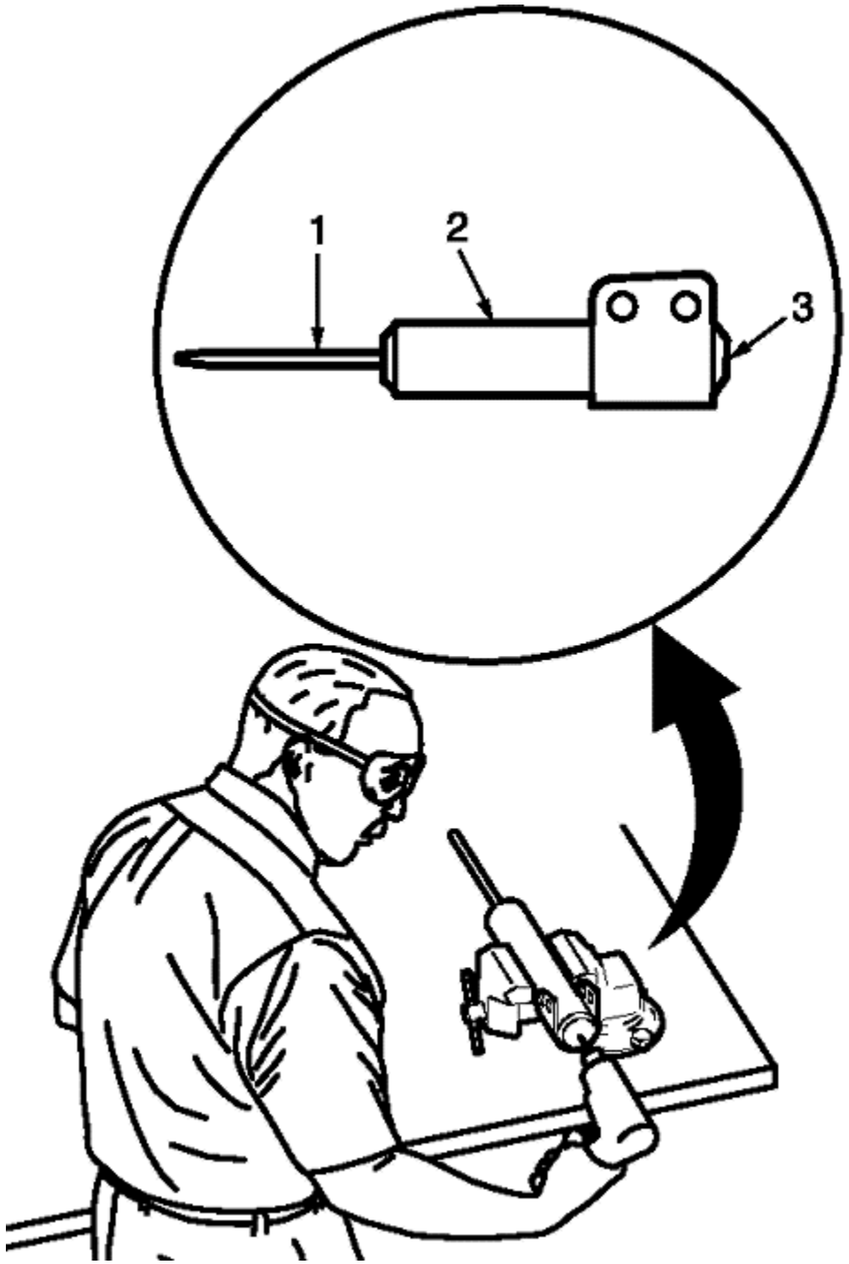

Warning: Use the proper eye protection when drilling to prevent metal chips from causing physical injury.

1. Clamp the strut in a vice horizontally with the rod (1) completely extended.
2. Drill a hole in the strut at the centre of the end cap (3) using a 5 mm (3/16 in) drill bit. Gas or a gas/oil mixture will exhaust when the drill bit penetrates the strut. Use

workshop towels in order to contain the escaping oil.

3. Remove the strut from the vice.
4. Hold the strut over a drain pan vertically with the hole down.
5. Move the rod (1) in and out of the tube (2) to completely drain the oil from the strut.

© Copyright Chevrolet. All rights reserved

Strut, Strut Component, or Spring Replacement

Special Tools

- *CH 6066* Strut Spring Compressor
- *CH 35669* Spanner

For equivalent regional tools, refer to Special Tools

Disassembly Procedure

1. Remove the front suspension strut from the vehicle. Refer to Strut Assembly Removal and Installation .

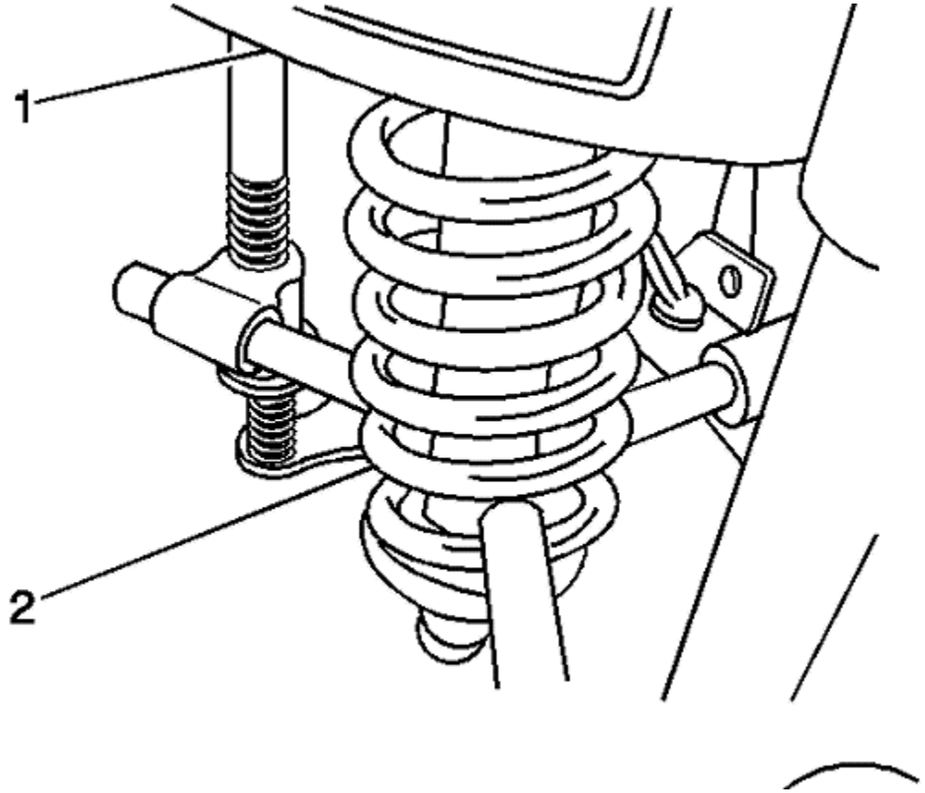

2. Install the front suspension strut (2) in the *CH 6066* compressor (1).

   Note: The spring is compressed when the strut moves freely.

3. Using the *CH 6066* compressor , compress the front spring.

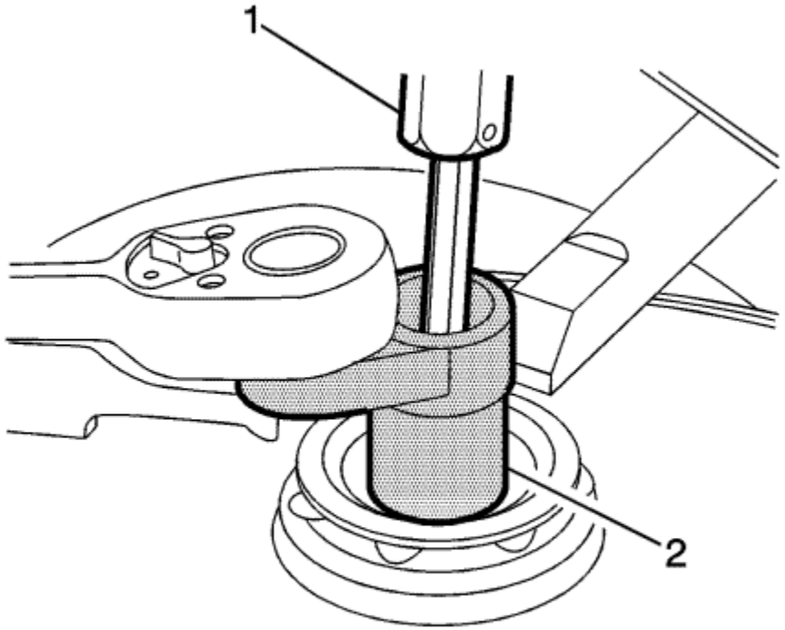

4. Using a TORX® bit (1) and the *CH 35669* spanner (2), remove the front suspension strut nut.

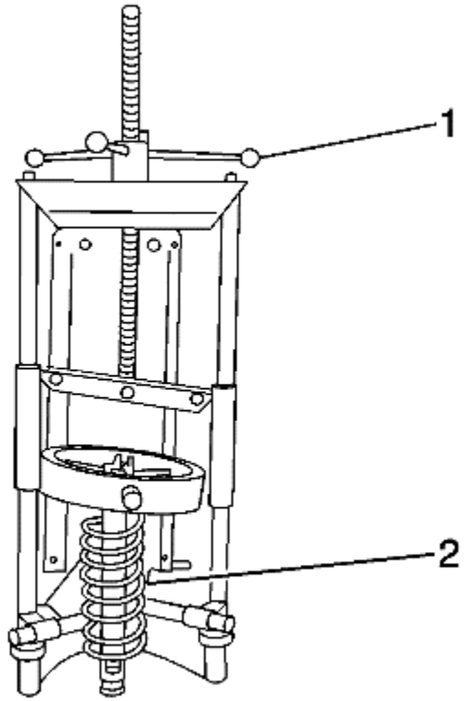

5. Remove the front suspension strut (2) from the *CH 6066* compressor .
6. Remove the front suspension strut mount and the front spring from the *CH 6066* compressor .

Assembly Procedure

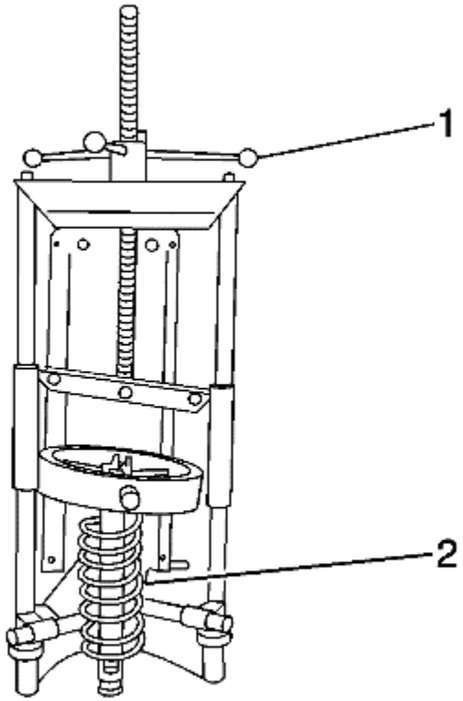

1. Install the front spring and front suspension strut mount (2) to the *CH 6066* compressor (1).
2. Using the *CH 6066* compressor (1), compress the front spring (2).
3. Hand-tighten the front suspension strut nut.

Caution: Refer to Fastener Caution in the Preface section.

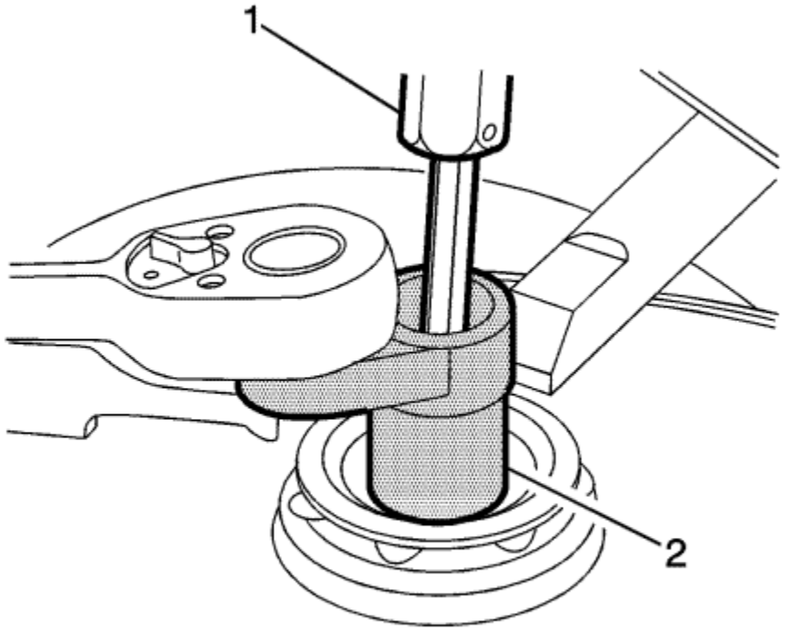

Note: Use the proper size TORX® bit, hold the strut shaft.

4. Using the *CH 35669* spanner (2) and the TORX® bit (1), tighten the front suspension strut nut to **70 N·m (52 lb ft).**
5. Remove the front suspension strut from the *CH 6066* compressor .
6. Install the front suspension strut to the vehicle. Refer to Strut Assembly Removal and Installation .

&#169© Copyright Chevrolet. All rights reserved

Front Suspension Description and Operation

The front suspension has 2 primary purposes:

- Isolate the driver from irregularities in the road surface.
- Define the ride and handling characteristics of the vehicle.

The front suspension absorbs the impact of the tyres travelling over irregular road surfaces and dissipates this energy throughout the suspension system. This process isolates the vehicle occupants from the road surface. The rate at which the suspension dissipates the energy and the amount of energy that is absorbed is how the suspension defines the vehicles ride characteristics. Ride characteristics are designed into the suspension system and are not adjustable. The ride characteristics are mentioned in this description in order to aid in the understanding of the functions of the suspension system. The suspension system must allow for the vertical movement of the tyre and wheel assembly as the vehicle travels over irregular road surfaces while maintaining the tyre's horizontal relationship to the road.

This requires that the steering knuckle be suspended between a lower control arm and a strut assembly. The lower control arm attaches from the steering knuckle at the outermost point of the control arm. The attachment is through a ball and socket type joint. The innermost end of the control arm attached at 2 points to the vehicle frame through semi-rigid bushes. The upper portion of the steering knuckle is attached to a strut assembly. The strut assembly then connects to the vehicle body by way of an upper bearing. The steering knuckle is allowed to travel up and down independent of the vehicle body structure and frame.

This up and down motion of the steering knuckle as the vehicle travels over bumps is absorbed predominantly by the coil spring. This spring is retained under tension over the strut assembly. A strut is used in conjunction with this system in order to dampen out the oscillations of the coil spring. A strut is a basic hydraulic cylinder. The strut is filled with oil and has a moveable shaft that connects to a piston inside the strut. Valves inside the shock absorber offer resistance to oil flow and consequently inhibit rapid movement of the piston and shaft. Each end of the shock absorber is connected in such a fashion to utilize this recoil action of a spring alone. Each end of the strut is designed as the connection point of the suspension system to the vehicle and acts as the coil spring seat. This allows the strut to utilize the dampening action to reduce the recoil of a spring alone. The lower control arm is allowed to pivot at the vehicle frame in a vertical fashion. The ball joint allows the steering knuckle to maintain the perpendicular relationship to the road surface.

Front suspensions systems utilize a stabiliser shaft. The anti-roll bar connects between the left and right lower control arm assemblies through the stabiliser link and stabiliser shaft insulators. This bar controls the amount of independent movement of the suspension when the vehicle turns. Limiting the independent movement defines the vehicles handling characteristics on turns.

&#169© Copyright Chevrolet. All rights reserved

Special Tools

Illustration	Tool Number/Description
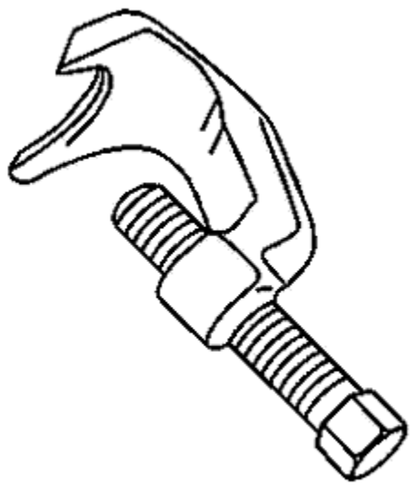	CH 43631 CH 49455 J 43631 Ball Joint Remover
	CH 6066 CH 6068 CH 48845 J-45400 KM 6066 KM 6068

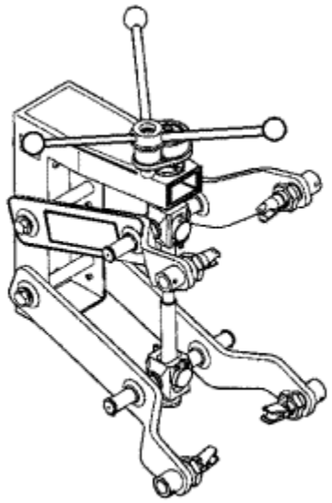	MKM 6068 Spring Compressor
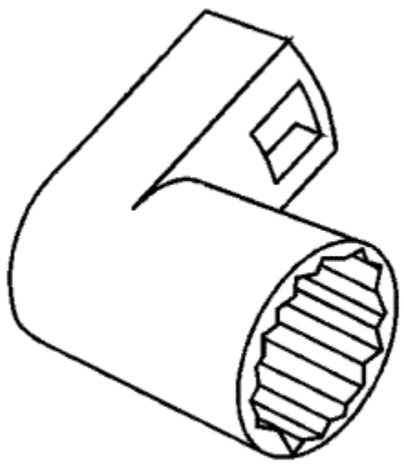	CH 35669 CH 49375 CH 899662 J 35669 Wrench

© Copyright Chevrolet. All rights reserved

Fastener Tightening Specifications

Application	Specification	
	Metric	English
Rear Axle Mounting Bracket Bolts (1)		
First Pass	90 N·m	66 lb ft
Final Pass	plus 45 degrees	
Rear Suspension Trailing Arm Nut (2)		
First Pass	70 N·m	52 lb ft
Final Pass	plus 120 degrees	
Rear Wheel Bearing and Hub Bolts		
First Pass	50 N·m	37 lb ft
Final Pass	plus 40 degrees	
Shock Absorber Lower Bolt (1)		
First Pass	150 N·m	111 lb ft
Final Pass	plus 65 degrees	
Shock Absorber Bolt at Upper Mount	20 N·m	15 lb ft
Shock Absorber Upper Bolts	100 N·m	74 lb ft
(1) Use only new bolts		
(2) Use only new nuts		

© Copyright Chevrolet. All rights reserved

Adhesives, Fluids, Lubricants, and Sealers

Application	Type of Material	GM Part Number	Canadian Part Number
Rear Wheel Bearing Hub Bolts	Threadlock	89021297	10953488

© Copyright Chevrolet. All rights reserved

Rear Wheel Bearing and Hub Replacement

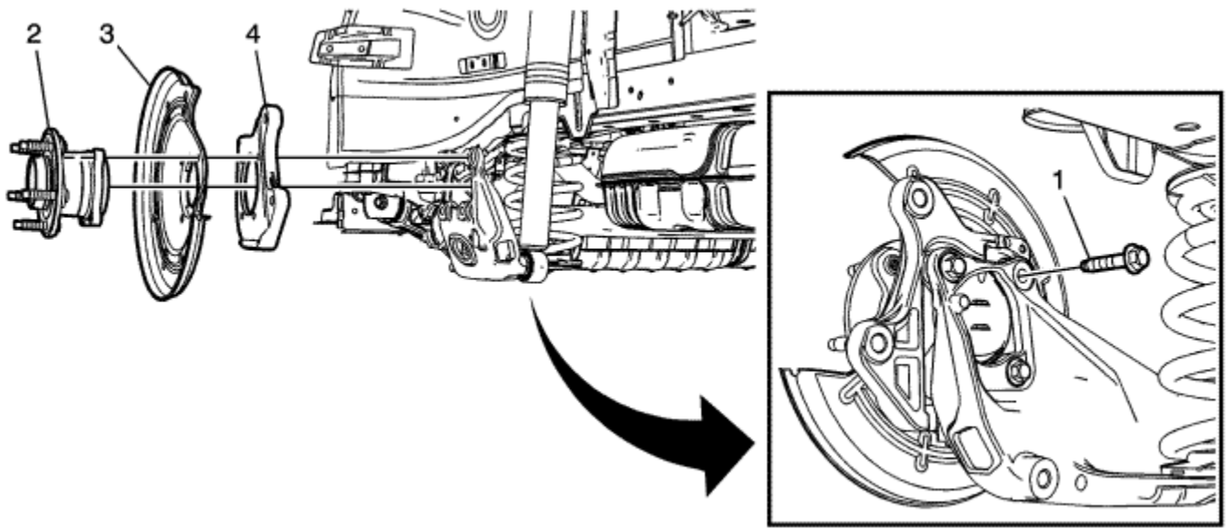

Callout	Component Name
Preliminary Procedure 1. Raise and support the vehicle. Refer to Lifting and Jacking the Vehicle . 2. Remove the tyre and wheel assembly. Refer to Tyre and Wheel Removal and Installation . 3. Remove the rear brake rotor. Refer to Rear Brake Rotor Replacement . 4. Remove the rear speed sensor, if equipped. Refer to Rear Wheel Speed Sensor Replacement .	
1	Rear Wheel Hub Bolt (Qty: 4) **Caution:** Refer to Fastener Caution in the Preface section. **Procedure** 1. Remove the bolt and replace with NEW only.

	2. Apply thread locker the rear wheel hub bolts. Refer to Adhesives, Fluids, Lubricants, and Sealers . **Tighten** 1. First Pass: 50 N·m (37 lb ft). 2. Final Pass: additional 40 degrees.
2	Rear Wheel Hub Assembly
3	Rear Disc Brake Backing Plate
4	Rear Brake Caliper Mounting Bracket

© Copyright Chevrolet. All rights reserved

Shock Absorber Replacement

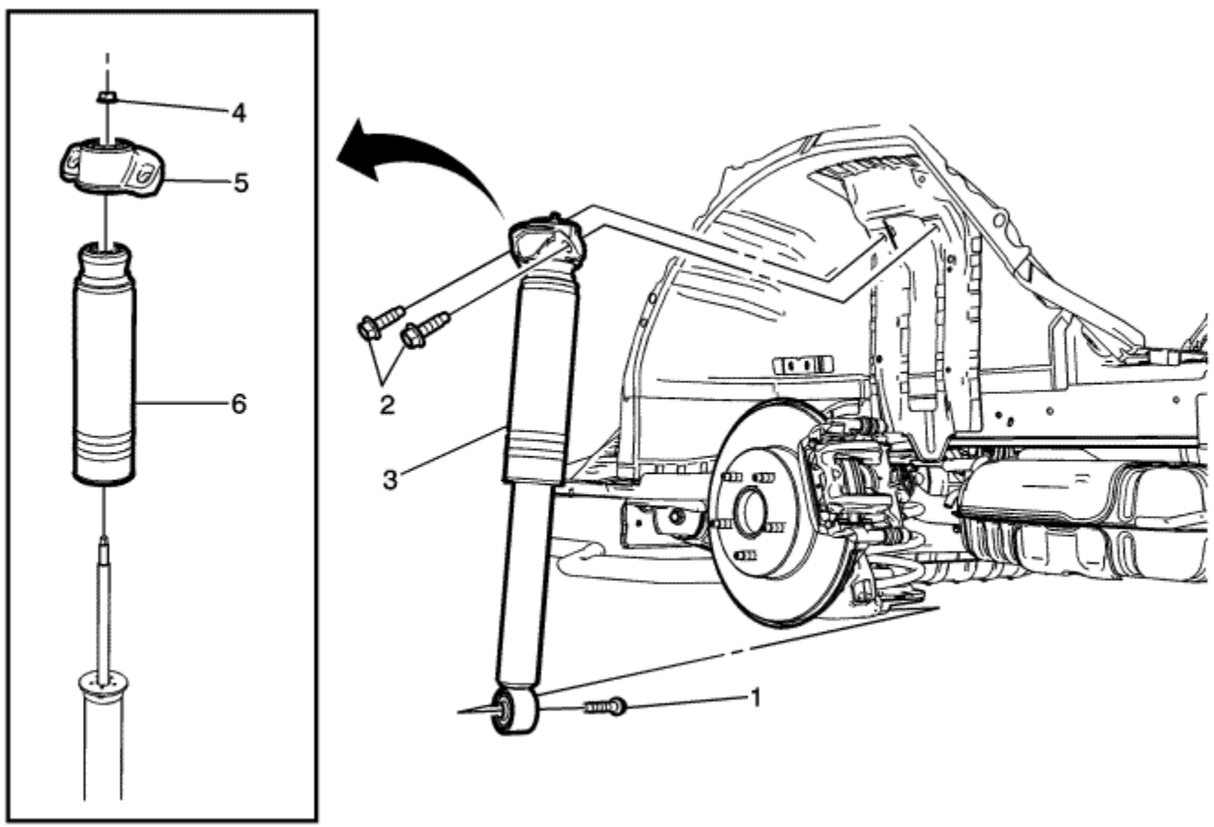

Callout	Component Name
Preliminary Procedure	
1. Raise and support the vehicle. Refer to Lifting and Jacking the Vehicle . 2. Remove the tyre and wheel assembly. Refer to Tyre and Wheel Removal and Installation . 3. Remove the rear wheel house panel liner. Refer to Rear Wheelhouse Panel Liner Replacement .	

1	Rear Shock Absorber Bolt. **Caution:** This component is equipped with torque-to-yield fasteners. Install a NEW torque-to-yield fastener when installing this component. Failure to replace the torque-to-yield fastener could cause damage to the vehicle or component. **Caution:** Refer to Fastener Caution in the Preface section. **Procedure** 1. Support the rear axle with a suitable jack stand. 2. Remove and discard the bolt. DO NOT re-use, replace with NEW only. 3. Support the front end of the vehicle and raise the rear axle to the proper D Height. Refer to Trim Height Inspection . **Tighten** 1. First Pass: 150 N·m (111 lb ft) 2. Final Pass: additional 65 degrees.
2	Rear Shock Absorber Bolt (Qty:2) **Tighten** 100 N·m (74 lb ft)
3	Rear Shock Absorber
4	Rear Shock Absorber Nut **Tighten** 20 N·m (15 lb ft)
5	Rear Shock Absorber Upper Mount
6	Rear Shock Absorber Bumper Upper

© Copyright Chevrolet. All rights reserved

Shock Absorber Disposal

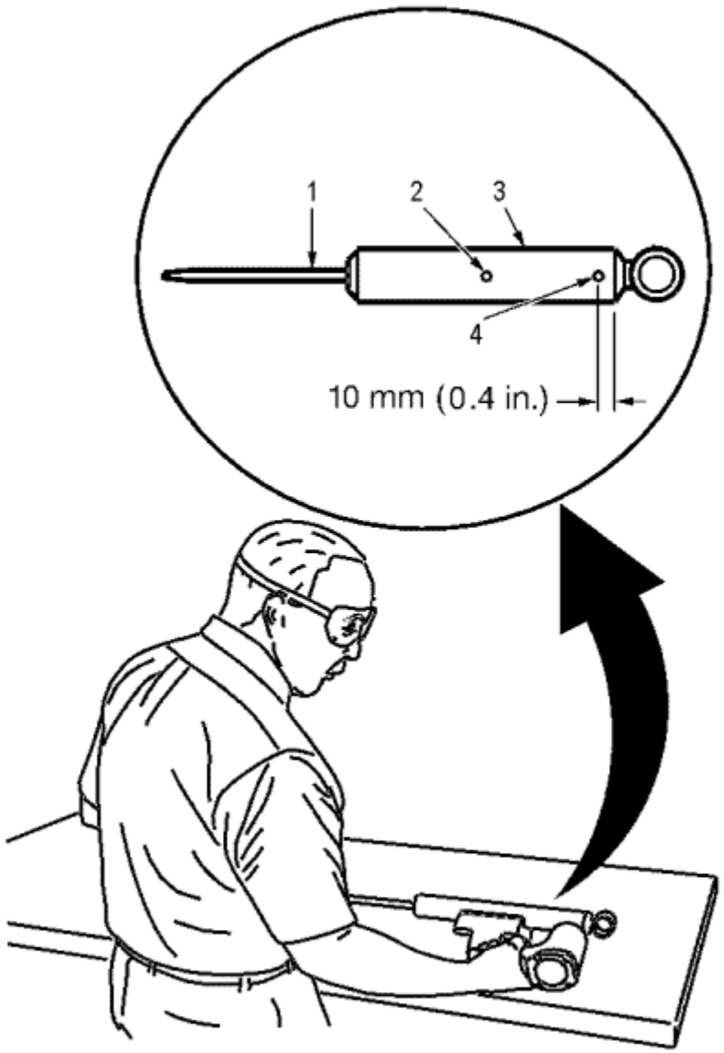

Warning: Gas charged shock absorbers contain high pressure gas. Do not remove the snap ring from inside the top of the tube. If the snap ring is removed, the contents of the shock absorber will come out with extreme force which may result in personal injury.

Warning: To prevent personal injury, wear safety glasses when centre punching and drilling the shock absorber. Use care not to puncture the shock absorber tube with the centre punch.

1. Make an indentation 10 mm (0.4 in) from the bottom (4) of the tube (3) using a centre punch.
2. Clamp the shock absorber in a vice horizontally with the shock absorber rod (1) completely extended.
3. Drill a hole in the shock absorber at the centre punch (4) using a 5 mm (3/16 in) drill bit. Gas or a gas/oil mixture will exhaust when the drill bit penetrates the shock absorber. Use workshop towels in order to contain the escaping oil.
4. Make an indentation in the middle (2) of the tube (3) with a centre punch.
5. Drill a second hole in the shock absorber at the centre punch (2) using a 5 mm (3/16 in) drill bit. Oil will exhaust when the drill bit penetrates the shock absorber. Use workshop towels in order to contain the escaping oil.
6. Remove the shock absorber from the vice. Hold the shock absorber over a drain pan horizontally with the holes down. Move the rod (1) in and out of the tube (3) to completely drain the oil from the shock absorber.

© Copyright Chevrolet. All rights reserved

Rear Spring, Insulator, and Jounce Bumper Replacement

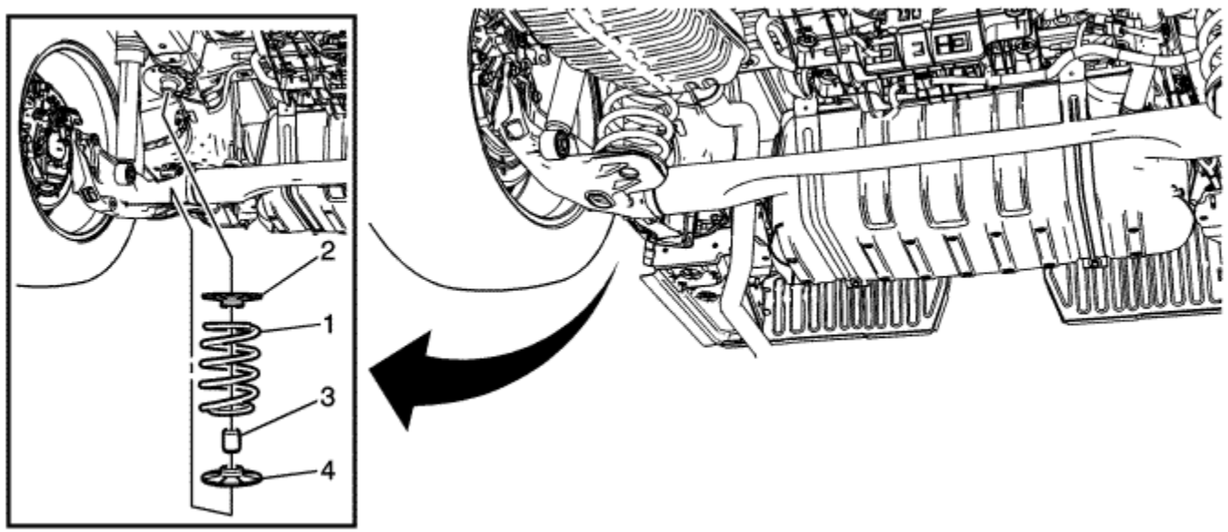

Callout	Component Name
Preliminary Procedure Raise and support the vehicle. Refer to Lifting and Jacking the Vehicle	
1	Rear Suspension Spring **Procedure** 1. Support the rear axle with a suitable jack stand. 2. If the springs are being removed to service or to service other suspension components and the tags are missing, mark the relationship of the rear spring prior to removal for the proper installation. 3. Remove the lower shock absorber bolt. Refer to Shock Absorber Replacement . **Tip** The rear springs are indexed with color are tags toward the rear of the vehicle and towards the top of the spring.

2	Rear Suspension Spring Insulator
3	Rear Suspension Stop
4	Rear Suspension Spring Insulator

© Copyright Chevrolet. All rights reserved

Rear Axle Replacement

Removal Procedure

1. Raise and support the vehicle. Refer to Lifting and Jacking the Vehicle .
2. Remove the tires and wheels. Refer to Tyre and Wheel Removal and Installation .

   Note:
   - It is not necessary to remove the brake rotor from the rear wheel bearing/hubs. The brake rotors can remain on the rear wheel bearing/hub assembly.
   - When removing the rear brake caliper assemblies, it is not necessary to remove the hydraulic brakes lines, or the park brake cable from the rear brake caliper. Relocate the brake caliper assembly to the side and support with mechanic's wire.

3. Remove the rear wheel bearing/hubs assemblies. Refer to Rear Wheel Bearing and Hub Replacement .

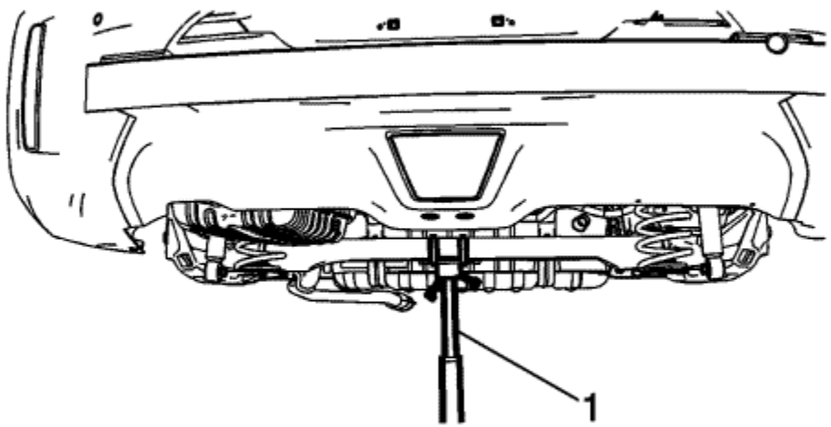

4. Secure the rear axle assembly to the hydraulic transmission jack (1).

   Note: Replace the rear spring insulators or the rear suspension jounce bumper if they are found to be damaged.

5. Remove the rear springs and the insulators. Refer to Rear Spring, Insulator, and Jounce Bumper Replacement .
6. Remove two lower fasteners for the rear wheel house panel liner to allow enough clearance to remove the trailing arm through bolt. Refer to Rear Wheelhouse Panel Liner Replacement .

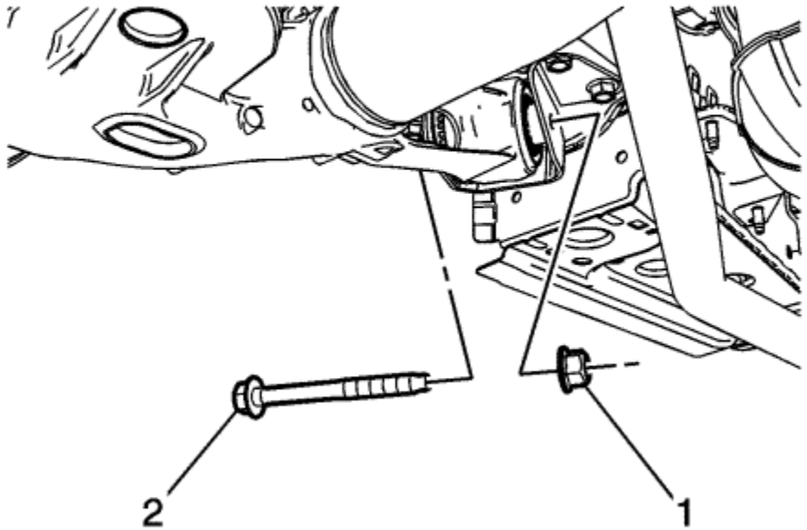

7. Remove the rear axle bushing nuts (1) and discard the bolts (2). Replace with NEW only.

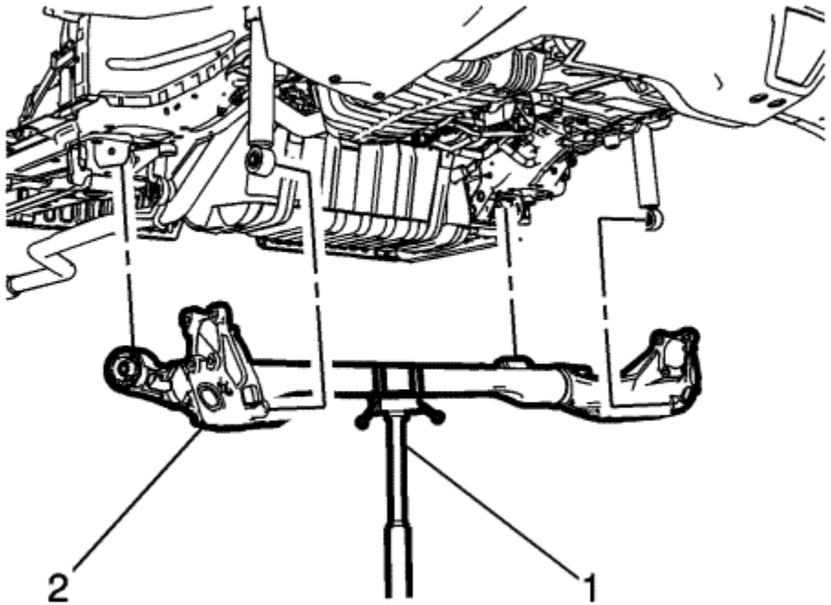

Note: It maybe necessary to have an assistant to help remove the rear axle from the vehicle.

8. Using the hydraulic transmission jack (1), remove the rear axle (2) from the vehicle.
9. With the aid of an assistant, remove the rear axle assembly from the hydraulic transmission jack.

Installation Procedure

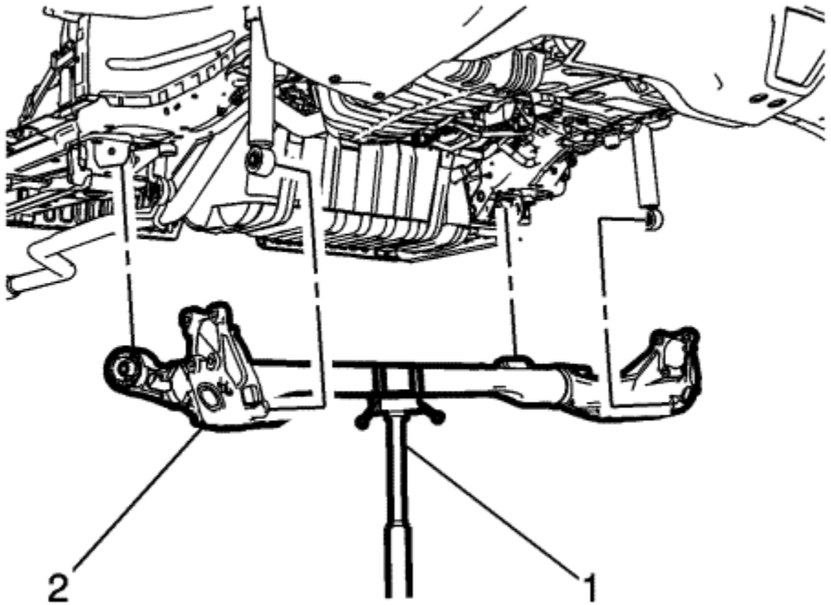

1. With the aide of an assistant, position the rear axle assembly (2) on the hydraulic transmission jack (1).

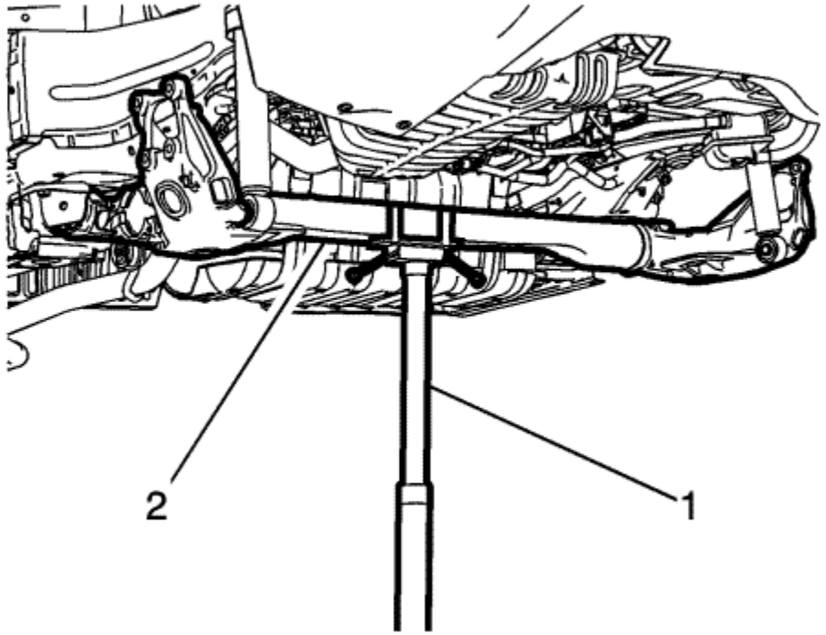

2. Using the hydraulic transmission jack (1) and the aid of an assistant, position the rear axle (2) in the rear axle brackets.

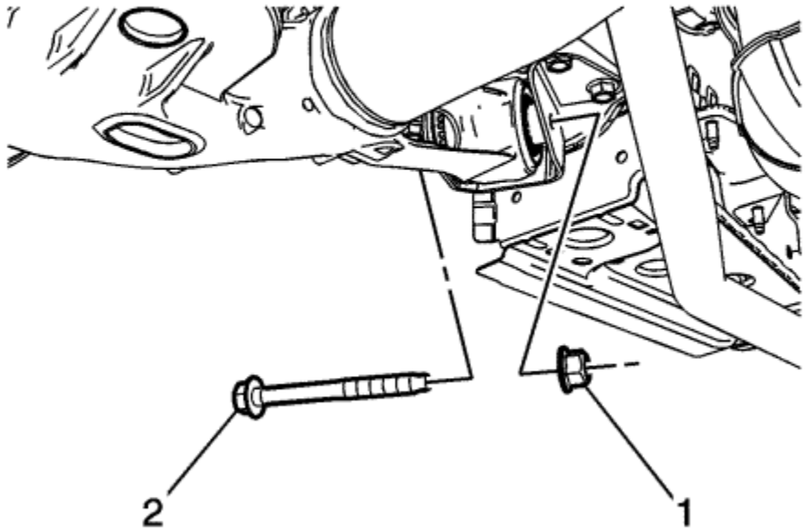

3. Install the rear axle bushing nuts (1) and the NEW bolts (2) and hand tighten.
4. Install the rear springs. Refer to Rear Spring, Insulator, and Jounce Bumper Replacement
5. Install the rear wheel bearings/hub assemblies. Refer to Rear Wheel Bearing and Hub Replacement .
6. Install the two front lower rear wheel house panel liner fasteners. Refer to Rear Wheelhouse Panel Liner Replacement .
7. Install the tyre and wheels. Refer to Tyre and Wheel Removal and Installation
8. Remove the support and lower the vehicle.
9. Inspect the trim height and adjust as required. Refer to Trim Height Inspection .

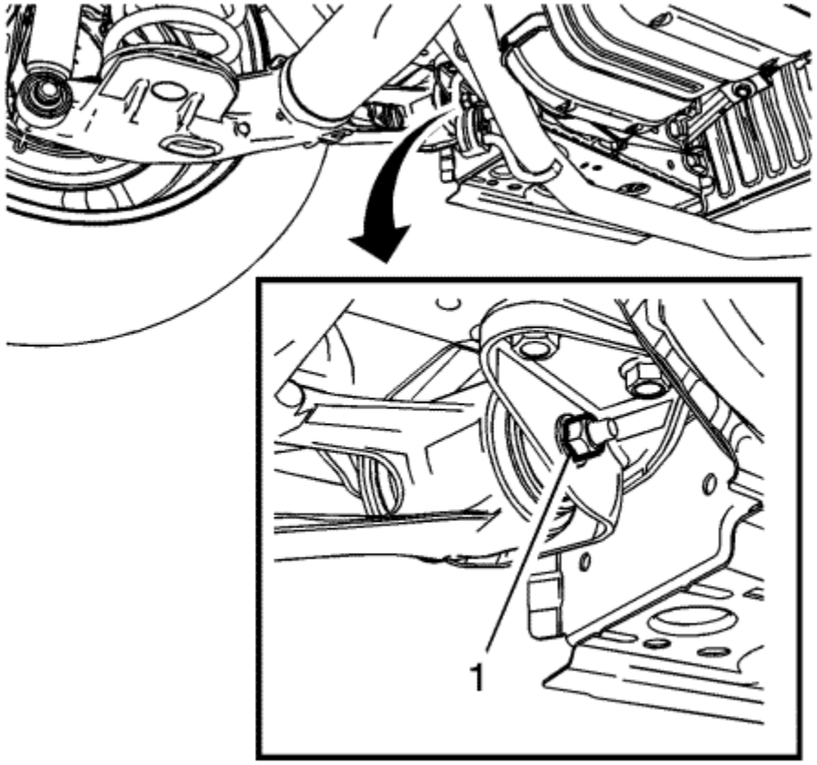

Warning: This component is equipped with torque-to-yield fasteners. Install a NEW torque-to-yield fastener when installing this component. Failure to replace the torque-to-yield fastener could cause bodily injury and damage to the vehicle or component.

10. Once the trim heights have been checked, tighten the trailing arm nuts (1) to:
    - First Pass: **70 N·m (52 lb ft)**
    - Final Pass: **additional 120 degrees**

&#169© Copyright Chevrolet. All rights reserved

Wheel Stud Replacement

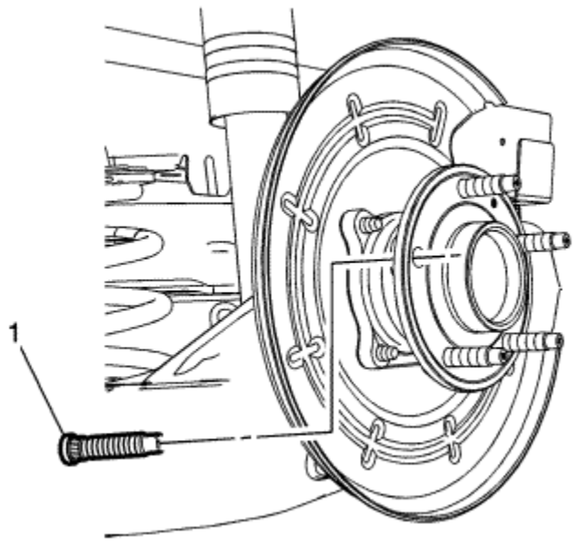

Callout	Component Name
Preliminary Procedure 1. Raise and support the vehicle. Refer to Lifting and Jacking the Vehicle . 2. Remove the tyre and wheel assembly. Refer to Tyre and Wheel Removal and Installation . 3. Remove the rear brake rotor. Refer to Rear Brake Rotor Replacement	
1	Wheel Stud (Qty: 5) **Procedure** 1. Rotate the wheel hub to gain enough worker area to remove the wheel stud. 2. Using the *CH 43631* remover, remove and discard the wheel stud from the wheel hub. Replace with new only. 3. When installing the wheel stud, use the proper amount of washers to allow the wheel stud to be fully seated against the wheel hub flange. 4. Use a wheel nut with the flat side of the wheel nut facing the washers to fully seat the wheel stud.

Special Tools

CH 43631 Ball Joint Remover

For equivalent regional tools, refer to Special Tools .

© Copyright Chevrolet. All rights reserved

Rear Suspension Description and Operation

This vehicle has a semi-independent twist-beam rear suspension system consisting of the following components:

- An axle with integral trailing arms
- A "V" shaped twisting cross beam
- Two coil springs
- Two shock absorbers

Axle Assembly

The axle assembly attaches to the underbody through a rubber bushing and bracket located at the front of each integral trailing arm. The brackets are bolted to the underbody side rails. The axle structure itself maintains the geometrical relationship of the wheels relative to the centreline of the body.

&#169© Copyright Chevrolet. All rights reserved

Special Tools

Illustration	Tool Number / Description
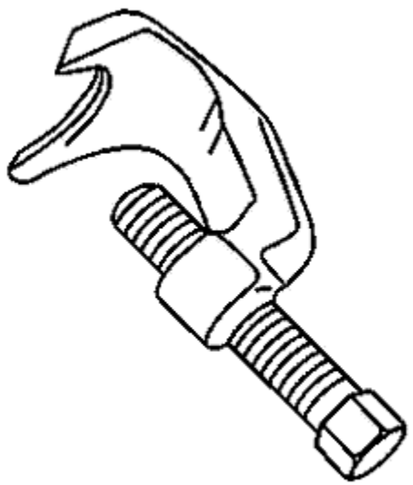	CH 43631 J-43461 Ball Joint Remover

© Copyright Chevrolet. All rights reserved

Trim Height Specifications

Model	Tyre Size	P	R	Z	D
All	P 215/55R17	706 ± 12 mm (27.8 ± 0.5 in)	714 ± 12 mm (28.1 ± 0.5 in)	39 ± 10 mm (1.54 ± 0.4 in)	236 ± 10 mm (9.29 ± 0.4 in)
All measurements have a cross tolerance of ± 10 mm (0.39 in)					

© Copyright Chevrolet. All rights reserved

Body Leans or Sways in Corners

Step	Action	Yes	No
1	Did you review the General Description and perform the necessary inspections?	Go to Step 2	
2	Verify the vehicle leans or sways in corners. Does the vehicle operate normally?	System OK	Go to Step 3
3	Inspect the following components for wear or damage: • Rear Coil Springs • Front Coil Springs Are the components worn or damaged?	Go to Step 5	Go to Step 4
4	1. Inspect the stabiliser shaft link for wear or damage. 2. Repair as necessary. Did you find and correct the condition?	Go to Step 6	Go to Step 2
5	Replace the springs as necessary. Did you complete the repair?	Go to Step 6	-
6	Operate the vehicle in order to verify the repair. Did you correct the condition?	System OK	Go to Step 3

&#169© Copyright Chevrolet. All rights reserved

Torque Steer

Step	Action	Yes	No
DEFINITION: On a dry, smooth, flat road, the vehicle has a left or right steering force only during acceleration.			
1	Did you review the General Description and perform the necessary inspections?	Go to Step 2	
2	1. Drive the vehicle on a straight, smooth, flat road. 2. Press the accelerator and determine if any additional steering input is required to maintain a straight ahead direction. 3. Repeat this test with the vehicle travelling in the opposite direction in order to eliminate crosswind effects. Lead/pull caused by uneven roads and crosswinds are considered normal. Does the vehicle exhibit torque steer when the accelerator is pressed?	Go to Step 3	System OK
3	1. Drive the vehicle on a straight, smooth, flat road at 64-97 km/h (40-60 mph). 2. Remove your foot from the accelerator. 3. Shift the transmission into NEUTRAL in order to allow the vehicle to freewheel. 4. Is any additional steering input required to maintain a straight ahead direction. 5. Repeat this test with the vehicle travelling in the opposite direction in order to eliminate crosswind effects. Lead/pull caused by uneven roads and crosswinds are considered normal. Does the vehicle direction change when the steering wheel is momentarily released?		Go to Step 4
4	Inspect the front suspension and powertrain mounts for worn or damaged components and repair as necessary. Did you find and correct the condition?	Go to Step 6	Go to Step 5
5	Inspect the vehicle trim height. Refer to Trim Height Inspection . Did you find and correct the condition?	Go to Step 6	-
6	Operate the vehicle in order to verify the repair. Did you correct the condition?	System OK	-

© Copyright Chevrolet. All rights reserved

Memory Steer

Step	Action	Yes	No
DEFINITION: A lead or pull in the direction the driver previously turned the vehicle. Additionally, after turning in the opposite direction, the vehicle will want to lead or pull in that direction.			
1	Did you review the General Description and perform the necessary inspections?	Go to Step 2	
2	Verify that memory steer is present. Does the system operate normally?	System OK	Go to Step 3
3	1. Raise and support the vehicle. Refer to Lifting and Jacking the Vehicle . 2. Lubricate the track rod ends and the ball joints if applicable. 3. Inspect the suspension system for worn or damaged components. 4. Repair as necessary. Did you find and correct the condition?	Go to Step 7	Go to Step 4
4	Inspect for binding strut bearings. 1. Disconnect the strut from the steering knuckle. 2. If the strut is abnormally difficult to rotate, repair or replace the upper bearing mount. Did you find and complete the repair?	Go to Step 7	Go to Step 5
5	Inspect for binding in the lower ball joints. If joint is binding, replace the joint. Did you find and complete the repair?	Go to Step 7	Go to Step 6
6	Inspect the wheel alignment and adjust as necessary. Refer to Wheel Alignment Measurement . Did you complete the wheel alignment?	Go to Step 7	-
7	Operate the vehicle in order to verify the repair. Did you correct the condition?	System OK	-

© Copyright Chevrolet. All rights reserved

Trim Height Inspection

Trim Height Measurement

Trim height is a predetermined measurement relating to vehicle ride height. Incorrect trim heights can cause the vehicle to bottom out over bumps, damage to the suspension components and symptoms similar to wheel alignment problems. Check the trim heights when diagnosing suspension concerns and before checking the wheel alignment.

Perform the following before measuring the trim heights:

- Set the tyre pressure to the specifications shown on the certification label. Refer to Vehicle Certification, Tyre Placard, Anti-Theft, and Service Parts ID Label .

  Note: One U.S. gallon of petrol weighs approximately **6.5 lbs**. One litre of petrol weighs approximately **0.7 kg.**

- Check the fuel level. Add additional weight if necessary to simulate a full tank.
- Make sure the passenger and rear compartments are empty, except for the spare tyre.
- Make sure the vehicle is on a flat and level surface, such as an alignment rack.
- Check that all the vehicle doors are securely closed.
- Check that the vehicle bonnet and rear deck lids are securely closed.
- Check for installed after market accessories or modifications that could affect trim height measurement:
  - Larger or smaller than production wheels and tyres.
  - Lifting or Lowering Kits
  - Wheel Opening Flares or Ground Affects

Measuring the P and R Dimension

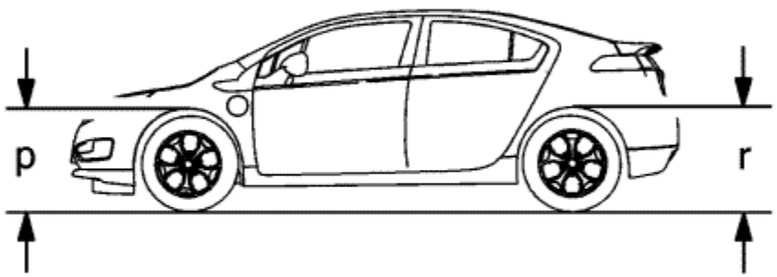

Measurement Definitions

P Height: The vertical distance from the ground to the top of the wheel opening through the centreline of the front wheel.

R Height: The vertical distance from the ground to the top of the wheel opening through the centreline of the rear wheel.

Use the following procedures to measure the P and R dimensions:

Note:

- Measure from the centre of the wheel well opening to the ground.
- The left and right P and R height differences should be no more than **10 mm (0.39 in)**.

1. Push the front bumper down a minimum of **25 mm (1 in)** and release. Perform this step three times.
2. Measure and record the trim height per the "Measurement Definitions" above.
3. Lift the bumper up a minimum of **25 mm (1 in)** and release. Perform this step three times.
4. Measure and record the trim height per the "Measurement Definitions" above.

5. The true P height measurement is the average of the measurements taken in step 2 and 4. Refer to Trim Height Specifications
6. Repeat the above steps at the rear of the vehicle for the R heights.
7. If the P and R heights are outside of the specifications, measure the Z & D heights.

Measuring the Z Dimension

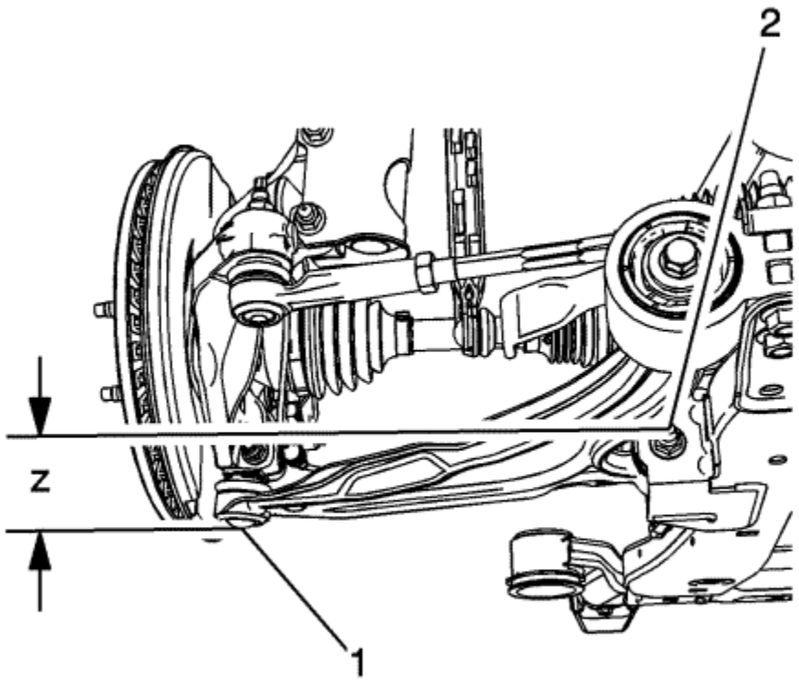

Measurement Definitions

The Z Height: The vertical distance from the forward front lower control arm (2) attachment bolt tip to the centre of the ball joint cup (1).

Use the following procedures to measure the Z dimensions:

Note: The left and right Z height differences should be no more than **10 mm (0.39 in)**.

1. Push the front bumper down a minimum of **25 mm (1 in)** and release. Perform this step three times.

2. Measure and record the trim height per the "Measurement Definitions" above.
3. Lift the front bumper a minimum of **25 mm (1 in)** and release. Perform this step three times.
4. Measure and record the trim height per the "Measurement Definitions" above.
5. The true Z height dimension is the average of the measurements taken in steps 2 and 4. Refer to Trim Height Specifications .
6. If these measurements are out of specifications, inspect for the following conditions:
   - Worn or damaged suspension components
   - Collision damage

D Height Measurement

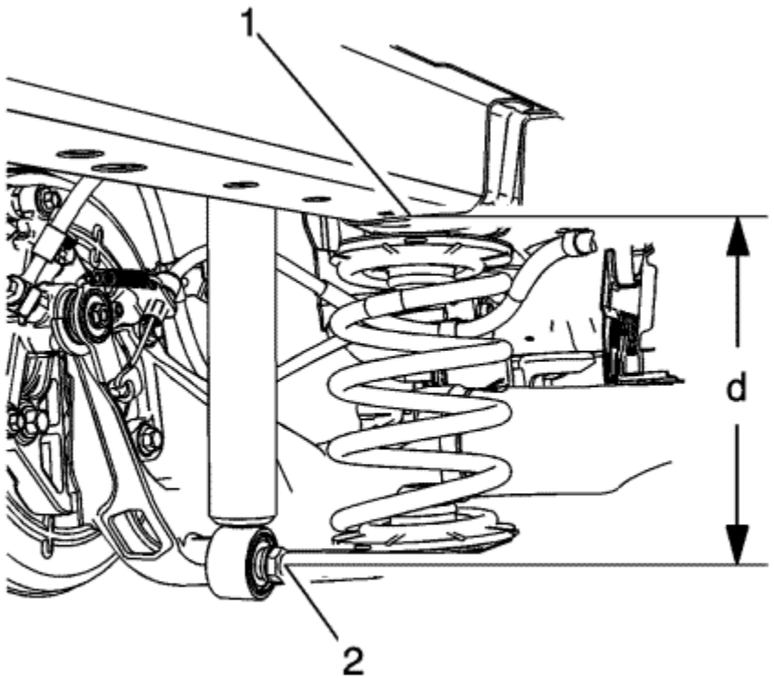

Measurement Definitions

The D Height: The vertical distance from the bottom surface of the body side rail (1) to the centre of the lower shock attaching bolt head (2).

Use the following procedure to check the D dimension:

Note: The left and right D height difference should be no more than **10 mm (0.39 in)**.

1. Push the rear bumper down a minimum of **25 mm (1 in)** and release. Perform this step three times.
2. Measure and record the trim height per the "Measurement Definitions" above.
3. Lift the rear bumper up a minimum of **25 mm (1 in)** and release. Perform this step three times.
4. Measure and record the trim height per the "Measurement Definitions" above.
5. The true D height is the average of the measurements taken in steps 2 and 4. Refer to Trim Height Specifications .
6. If these measurements are out of specifications, inspect for the following conditions:
   - Worn or damaged suspension components
   - Collision damage

&#169© Copyright Chevrolet. All rights reserved

Tire Pressure Monitoring System Schematics

Tyre Pressure Monitoring

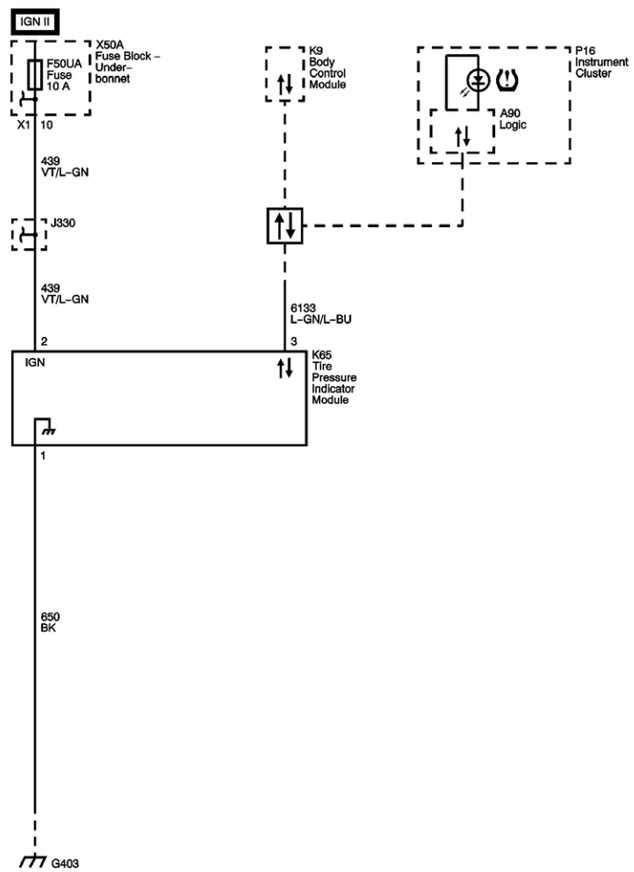

Master Electrical Component List

Tyre Pressure Monitor Description and Operation

© Copyright Chevrolet. All rights reserved

DTC C0569

Diagnostic Instructions

- Perform the Diagnostic System Check - Vehicle prior to using this diagnostic procedure.
- Review Strategy Based Diagnosis for an overview of the diagnostic approach.
- Diagnostic Procedure Instructions provides an overview of each diagnostic category.

DTC Descriptor

DTC C0569 00: System Configuration Malfunction

Circuit/System Description

If the tyre type and pressure information is not entered with the scan tool during the body control module (BCM) setup, the tyre pressure monitor system indicator icon on the instrument cluster will flash for 1 min. and then remain illuminated after the power switch is cycled ON and the instrument cluster bulb check is complete. If equipped, the driver information center will also display a service tire monitor type message. Under these circumstances, DTC C0569 will be set and the tire type and pressure information will need to be entered for the system to function correctly.

Conditions for Running the DTC

Vehicle ON or Vehicle in Service Mode.

Conditions for Setting the DTC

The tyre type and pressure information is not entered into the BCM during programming and setup.

Action Taken When the DTC Sets

- The tyre pressure monitor system indicator icon on the instrument cluster flashes for 1 min. and then remains illuminated after the power switch is cycled ON and the instrument cluster bulb check is complete.
- If equipped, the driver information center displays a service tire monitor type message.

Conditions for Clearing the DTC

A current DTC will clear when the BCM has undergone the tyre type and pressure selection setup procedure and 1 power switch cycle has occurred.

Diagnostic Aids

A newly replaced BCM will set DTC C0569 after programming on its initial power switch ON cycle if the module setup information has not been entered.

Reference Information

Schematic Reference

Tire Pressure Monitoring System Schematics

Connector End View Reference

Component Connector End Views

Description and Operation

Tyre Pressure Monitor Description and Operation

Electrical Information Reference

- Circuit Testing
- Connector Repairs
- Testing for Intermittent Conditions and Poor Connections
- Wiring Repairs

Scan Tool Reference

Control Module References for scan tool information

Circuit/System Verification

1. Vehicle in Service Mode.
2. Enter the Tyre Type and Pressure information with a scan tool into the K9 body control module. Refer to Vehicle Certification, Tyre Placard, Anti-Theft, and Service Parts ID Label .
3. Vehicle OFF then Vehicle in Service Mode.

4. Verify DTC C0569 is not set.
   If the DTC is set
   Replace the K9 body control module.
   If the DTC is not set.
5. All OK.

Repair Instructions

Perform the Diagnostic Repair Verification after completing the repair.

Control Module References for BCM replacement, programming, and setup.

&#169© Copyright Chevrolet. All rights reserved

DTC C0750, C0755, C0760, or C0765

Diagnostic Instructions

- Perform the Diagnostic System Check - Vehicle prior to using this diagnostic procedure.
- Review Strategy Based Diagnosis for an overview of the diagnostic approach.
- Diagnostic Procedure Instructions provides an overview of each diagnostic category.

DTC Descriptor

DTC C0750 03: Left Front Tire Pressure Sensor Low Voltage

DTC C0750 29: Left Front Tire Pressure Sensor Too Few Pulses

DTC C0750 39: Left Front Tire Pressure Sensor Internal Malfunction

DTC C0755 03: Right Front Tire Pressure Sensor Low Voltage

DTC C0755 29: Right Front Tire Pressure Sensor Too Few Pulses

DTC C0755 39: Right Front Tire Pressure Sensor Internal Malfunction

DTC C0760 03: Left Rear Tire Pressure Sensor Low Voltage

DTC C0760 29: Left Rear Tire Pressure Sensor Too Few Pulses

DTC C0760 39: Left Rear Tire Pressure Sensor Internal Malfunction

DTC C0765 03: Right Rear Tire Pressure Sensor Low Voltage

DTC C0765 29: Right Rear Tire Pressure Sensor Too Few Pulses

DTC C0765 39: Right Rear Tire Pressure Sensor Internal Malfunction

Circuit/System Description

The tire pressure monitor system has a radio frequency transmitting pressure sensor in each wheel/tire assembly. As vehicle speed increases, centrifugal force closes the sensors internal roll switch, which puts the sensor into Drive mode. The remote control door lock receiver receives and then sends the tyre pressure and temperature data to the body control module (BCM). The tyre pressure indicator module sends sensor ID and location data to the BCM. The BCM translates the data contained in the tire pressure sensor radio frequency transmissions into sensor presence, sensor mode, and tire pressure. Once vehicle speed is greater than 40 km/h (25 MPH), the remote control door lock receiver waits for the sensors to go into Drive mode. If one or more sensors do not go into Drive mode, or do not transmit at all, the BCM will set DTC C0750, C0755, C0760, or C0765 respectively.

Conditions for Running the DTC

Vehicle speed is greater than 40 km/h (25 MPH).

Conditions for Setting the DTC

- A sensor does not transmit or transmits invalid data to the BCM.
- The tyre pressure indicator module does not send or sends invalid data to the BCM.
- A sensor low battery condition.

Action Taken When the DTC Sets

- The tyre pressure monitor system indicator icon on the instrument cluster flashes for 1 min and then remains illuminated after the power switch is cycled ON and the instrument cluster bulb check is complete.
- If equipped, the driver information center displays a service tire monitor type message.

Conditions for Clearing the DTC

A current DTC will clear when the malfunction is no longer present and 1 power cycle occurs.

Diagnostic Aids

- Aftermarket wheel valve system locations can cause a sensor to not function correctly.
- A sensor may have been damaged due to a previous wheel/tire service or flat tire event.
- Occasionally sensor transmissions are not received by the remote control door lock receiver due to vehicle level radio frequency interference from items such as but not limited to aftermarket power systems, DVD players, CB radios, or metallic type window tinting.

Reference Information

Schematic Reference

Tire Pressure Monitoring System Schematics

Connector End View Reference

Component Connector End Views

Description and Operation

Tyre Pressure Monitor Description and Operation

Electrical Information Reference

- Circuit Testing
- Connector Repairs
- Testing for Intermittent Conditions and Poor Connections
- Wiring Repairs

Scan Tool Reference

Control Module References for scan tool information

Circuit/System Verification

1. Verify DTC C0750, C0755, C0760, or C0765 is not set.
   If the DTC is set
   1.1. Replace the appropriate B2 tyre pressure sensor.
   1.2. Drive the vehicle for at least 9 minutes above 40 km/h (25 MPH).
   If the DTC is not set
2. All OK.

Repair Instructions

Perform the Diagnostic Repair Verification after completing the repair.

Tire Pressure Indicator Sensor Replacement

&#169© Copyright Chevrolet. All rights reserved

DTC C0775

Diagnostic Instructions

- Perform the Diagnostic System Check - Vehicle prior to using this diagnostic procedure.
- Review Strategy Based Diagnosis for an overview of the diagnostic approach.
- Diagnostic Procedure Instructions provides an overview of each diagnostic category.

DTC Descriptor

DTC C0775 00: Tire Pressure Monitoring System Sensors Malfunction

Circuit/System Description

If the body control module (BCM) has been reprogrammed or replaced and the tyre pressure sensor autolearn process has not occurred, the tyre pressure monitor system indicator icon on the instrument cluster will flash for 1 min. and then remain illuminated after the power switch is cycled ON and the instrument cluster bulb check is complete. If equipped, the driver information center will also display a service tire monitor type message. Under these circumstances, DTC C0775 will be set in the BCM and the tyre pressure sensor autolearn process will need to be performed for the system to function correctly. The remote control door lock receiver receives and then sends the tyre pressure and temperature data to the body control module (BCM). The tyre pressure indicator module receives and then sends sensor ID and location data to the BCM. The tyre pressure indicator module determines tyre side to side position by the rotating direction of the tyres and the front to rear position by the strength of the signals received. To complete the tyre pressure indicator module autolearn process it is required that the vehicle be driven for at least 9 minutes above 40 km/h (25 MPH).

Conditions for Running the DTC

Vehicle ON or Vehicle in Service Mode.

Conditions for Setting the DTC

The body control module (BCM) has not received tyre sensor ID and location information from the tyre pressure indicator module.

Action Taken When the DTC Sets

- The tyre pressure monitor system indicator icon on the instrument cluster will flash for 1 min. and then remain illuminated after the power switch is cycled ON and the

instrument cluster bulb check is complete.
- If equipped, the driver information center displays a service tire monitor type warning message.

Conditions for Clearing the DTC

A current DTC will clear when the BCM has received tyre sensor ID and location information from the tyre pressure indicator module and at least 1 power switch cycle has occurred.

Reference Information

Schematic Reference

Tire Pressure Monitoring System Schematics

Connector End View Reference

Component Connector End Views

Description and Operation

Tyre Pressure Monitor Description and Operation

Electrical Information Reference

- Circuit Testing
- Connector Repairs
- Testing for Intermittent Conditions and Poor Connections
- Wiring Repairs

Scan Tool Reference

Control Module References for scan tool information

Circuit/System Verification

1. Drive the vehicle for at least 9 minutes above 40 km/h (25 MPH).
2. Verify DTC C0775 is not set.
   If the DTC is set
   2.1. Replace the K65 tyre pressure indicator module.

2.2. Drive the vehicle for at least 9 minutes above 40 km/h (25 MPH).
2.3. Verify DTC C0775 is not set.
If the DTC is set, replace the K9 body control module.
If the DTC is not set
2.4. All OK.

If the DTC is not set

3. All OK.

Repair Instructions

Perform the Diagnostic Repair Verification after completing the repair.

Control Module References for tyre pressure indicator module and BCM replacement, programming, and setup.

&#169© Copyright Chevrolet. All rights reserved

Symptoms - Tyre Pressure Monitoring

1. Perform the Diagnostic System Check - Vehicle before using the Symptom Tables in order to verify that all of the following are true:
   - There are no DTCs set.
   - The control modules can communicate via the serial data link.
2. Review the system operation in order to familiarize yourself with the system functions. Refer to Tyre Pressure Monitor Description and Operation .

Visual/Physical Inspection

- Inspect for aftermarket devices which could affect the operation of the Tire Pressure Monitoring (TPM) System. Refer to Checking Aftermarket Accessories .
- Inspect the easily accessible or visible system components for obvious damage or conditions which could cause the symptom.

Intermittent

Faulty electrical connections or wiring may be the cause of intermittent conditions. Refer to Testing for Intermittent Conditions and Poor Connections .

Symptom List

Refer to Low Tyre Pressure Indicator Malfunction in order to diagnose the symptom.

&#169© Copyright Chevrolet. All rights reserved

Low Tyre Pressure Indicator Malfunction

Diagnostic Instructions

- Perform the Diagnostic System Check - Vehicle prior to using this diagnostic procedure.
- Review Strategy Based Diagnosis for an overview of the diagnostic approach.
- Diagnostic Procedure Instructions provides an overview of each diagnostic category.

Circuit/System Description

The tire pressure monitor system has a radio frequency transmitting pressure sensor in each wheel/tire assembly. As vehicle speed increases, centrifugal force closes the sensors internal roll switch, which puts the sensor into Drive mode. The remote control door lock receiver receives and then sends the tyre pressure and temperature data to the body control module (BCM). The tyre pressure indicator module sends sensor ID and location data to the BCM. The BCM translates the data contained in the tire pressure sensor radio frequency transmissions into sensor presence, sensor mode, and tire pressure. Once vehicle speed is greater than 40 km/h (25 MPH), the remote control door lock receiver waits for the sensors to go into Drive mode.

Each sensor has its own unique identification (ID) code, which it transmits as part of each RF message, that must be learned into the BCM memory. Once all 4 IDs have been learned and vehicle speed is greater than 40 km/h (25 mph), the BCM continuously compares IDs and pressure data in the received transmissions to the learned IDs and pressures to determine if all 4 sensors are present and if one or more tyres are low. If the BCM detects a low tyre pressure condition, a variation in pressure between 2 tyres on the same axle, or a malfunction in the system, it will send a serial data message to the instrument cluster requesting the appropriate tyre pressure monitor indicator illumination and also to display the appropriate data message on the driver information centre, if equipped.

Diagnostic Aids

- If unsure about the condition, cycle the power switch and observe the tyre pressure monitor indicator icon. If the tire pressure monitor indicator icon is continuously illuminated after the instrument cluster bulb check is completed, a low tire pressure condition is present. Check the tires for damage or leaks and inflate to the tire placard specifications. Refer to Vehicle Certification, Tyre Placard, Anti-Theft, and Service Parts ID Label . If the tyre pressure monitor indicator icon flashes for 1 minute after the instrument cluster bulb check is completed and then remains illuminated, a tyre pressure monitor system DTC is set. Perform the Diagnostic System Check - Vehicle to proceed with the proper diagnosis.
- Temperature can greatly affect tyre pressures. Low tyre pressure on a cold morning may cause the tyre pressure monitor indicator icon to turn ON. The air pressure in the tyre increases as the ambient temperature rises or as the tyre warms up while the vehicle is driven. The pressure may increase enough to exceed the predetermined low pressure threshold which will turn OFF the tyre pressure monitor indicator icon.
- Aftermarket wheel value stem locations can cause a sensor to not function correctly.
- A sensor may have been damaged due to a previous wheel/tire service or flat tire event.

- The use of other than GM approved tire sealants can obstruct the sensor pressure sensing port and cause inaccurate tire pressure readings. If this condition is verified, remove the sealer from the tire and replace the sensor. Refer to Tire Pressure Indicator Sensor Replacement .
- Occasionally sensor transmissions are not received by the BCM due to vehicle level RF interference from items such as but not limited to aftermarket ignition systems, DVD players, CB radios, or metallic type window tinting.

Reference Information

Description and Operation

Tyre Pressure Monitor Description and Operation

Electrical Information Reference

- Circuit Testing
- Connector Repairs
- Testing for Intermittent Conditions and Poor Connections
- Wiring Repairs

Scan Tool Reference

Control Module References for scan tool information

Circuit/System Verification

Note: Low tyre pressure in one or more tyres is indicated by a continuously illuminated tyre pressure monitor indicator icon after the instrument cluster bulb check is completed. If equipped with a driver information centre, a check tyre pressure type message will also be displayed.

When a tyre pressure monitor DTC is set, the tyre pressure monitor indicator icon will flash for 1 minute after the instrument cluster bulb check is completed and then remains illuminated. If equipped with a driver information center, a service tire monitor type message will also be displayed.

1. Adjust all tyre pressures to the correct pressure. Refer to Vehicle Certification, Tyre Placard, Anti-Theft, and Service Parts ID Label
2. Drive the vehicle over 40 km/h (25 mph) for greater than 9 minutes.
3. Verify the low tyre pressure indicator is OFF.

   If the low tyre pressure indicator is ON

   3.1. Record each sensor tyre pressure parameter from the scan tool.

   3.2. Check and record the tyre pressures with a known accurate hand held tyre pressure gauge.

   3.3. Verify that the pressure readings from the scan tool do not differ more than 27.6 kPa (4 psi) from the actual tyre pressure readings.

   If the pressure readings differ more than 27.6 kPa (4 psi), replace the appropriate B2 tyre pressure sensor then drive the vehicle over 40 km/h (25 mph) for more than 9 minutes.

If the pressure readings do not differ more than 27.6 kPa (4 psi)

3.4. Verify the BCM Tyre Type and Pressure selections are setup correctly with a scan tool. Refer to the Vehicle Certification, Tyre Placard, Anti-Theft, and Service Parts ID Label .

If the BCM Tire Type and Pressure selections are incorrect, input the proper placard values for the vehicle with the scan tool then drive the vehicle over 40 km/h (25 mph) for more than 9 minutes.

If the BCM Tyre Type and Pressure selections are correct

3.5. Vehicle in Service Mode.

3.6. Verify the tyre pressure monitor indicator icon turns ON and OFF when commanding the instrument cluster All Indicators ON and OFF with a scan tool.

If the tyre pressure monitor icon does not turn ON and OFF, replace the P16 instrument cluster.

If the tyre pressure monitor icon turns ON and OFF

3.7. All OK

If the tyre pressure indicator is OFF

4. All OK

Repair Instructions

Perform the Diagnostic Repair Verification after completing the repair.

- Tire Pressure Indicator Sensor Replacement
- Control Module References for instrument cluster replacement, programming, and setup.

&#169© Copyright Chevrolet. All rights reserved

Tire Pressure Indicator Sensor Replacement

Removal Procedure

1. Raise the vehicle on a suitable support. Refer to Lifting and Jacking the Vehicle .
2. Remove the tyre/wheel assembly from the vehicle. Refer to Tyre and Wheel Removal and Installation .
3. Dismount the tire from the rim.

Note: When servicing the tyre pressure sensor always use a new Schrader® tyre pressure monitoring (TPM) sensor and a new TORX screw during installation.

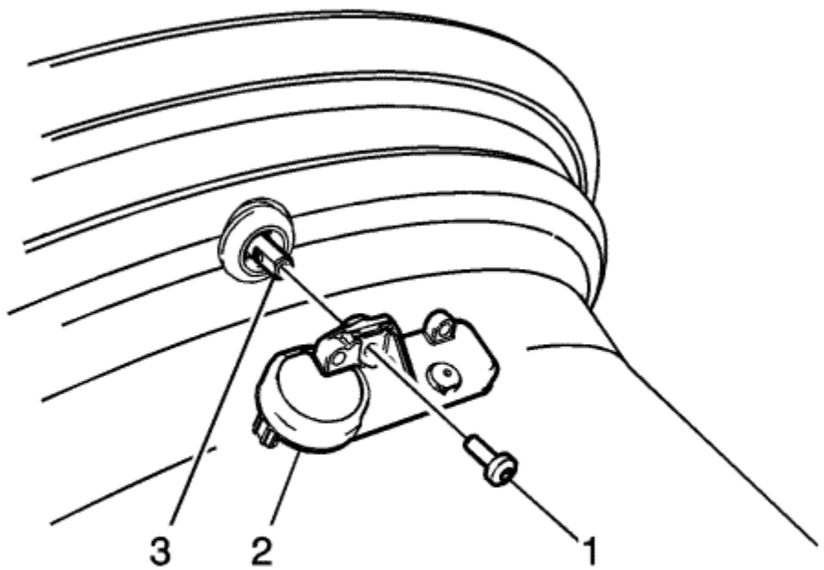

4. Remove the TORX screw (1) from the tyre pressure sensor (2) and pull it straight off the tyre pressure valve stem (3).

   Caution: Do not scratch or damage the clear coating on aluminium wheels with the tyre changing equipment. Scratching the clear coating could cause the aluminium wheel to corrode and the clear coating to peel from the wheel.

5. Remove the tyre pressure valve stem by pulling it through the rim.

Installation Procedure

Caution: Refer to Fastener Caution in the Preface section.

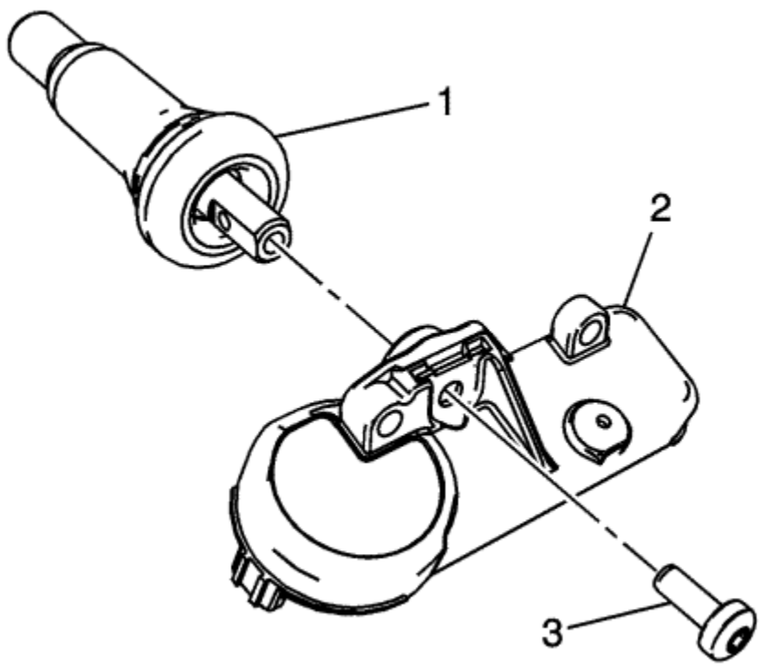

Note:

- Ensure the flat of the valve lines up with the flats of the snap in the enclosure.
- TPM valves and TORX screws are single use items.

1. Assemble the tyre pressure sensor (2) to the valve stem and install the new TORX screw (3), tighten to **1.3 N·m (11.5 lb in)**.

   Note: Use an approved tyre mounting lubricant. DO NOT use silicon or corrosive base compounds to lubricate the tyre bead and the wheel rim. A corrosive type compound can cause tyre or rim deterioration.

2. Apply tyre soap to the rubber portion of the valve stem (1).

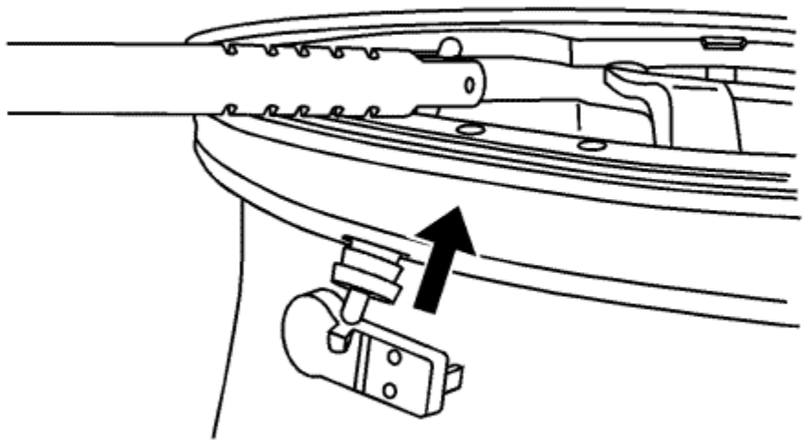

3. Using a tyre valve stem mounting tool, pull the valve stem through in a direction parallel to the valve hole on the rim.

   Note: Snap Fit TPM sensors are shipped in the OFF mode. The sensor will exit its OFF state when the tyre is inflated.

4. Mount the tyre to the rim.
5. Install the tyre/wheel assembly on the vehicle. Refer to Tyre and Wheel Removal and Installation .
6. Lower the vehicle.
7. Re-learn the tyre pressure sensors.

&#169© Copyright Chevrolet. All rights reserved

Tyre Pressure Monitor Description and Operation

Tire Pressure Monitoring System Operation

The tyre pressure monitor system warns the driver when a significant loss or gain of tyre pressure occurs in any of the 4 tyres. It allows the driver to display the individual tyre pressures and their locations on the driver information centre.

The system uses the body control module (BCM), driver information centre, instrument cluster, remote control door lock receiver, tyre pressure indicator module and a radio frequency transmitting pressure sensor in each tyre assembly. Each sensor has an internal power supply.

When the vehicle is stationary, the sensors internal accelerometer is inactive which puts the sensors into a Stationary state. In this state the sensors sample tire pressure once every 30 seconds and do not transmit at all if the tire pressure does not change. As vehicle speed increases, centrifugal force closes the sensors internal roll switch, which puts the sensor into Wake and then Drive mode. The remote control door lock receiver receives and then sends the tyre pressure and temperature data to the body control module (BCM). The tyre pressure indicator module sends sensor ID and location data to the BCM. The BCM translates the data contained in the tire pressure sensor radio frequency transmissions into sensor presence, sensor mode, and tire pressure. Once vehicle speed is greater than 40 km/h (25 MPH), the remote control door lock receiver waits for the sensors to go into Drive mode.

Each sensor has its own unique identification (ID) code which it transmits as part of each RF message and must be learned into the BCM memory. Once all 4 ID's have been learned and vehicle speed is greater than 40 km/h (25 mph), the BCM continuously compares ID's and pressure data in the received transmissions to the learned ID's and pressures to determine if all 4 sensors are present and if one or more tyres are low. If the BCM detects a low tyre pressure condition, a variation in pressure between 2 tyres on the same axle, or a malfunction in the system, it will send a serial data message to the instrument cluster requesting the appropriate tyre pressure monitor indicator illumination and also to display the appropriate data message on the driver information centre, if equipped.

The sensors continuously compare their last pressure sample to their current pressure sample and will transmit in Learn Mode-Pressure Triggered if a 8.3 kPa (1.2 PSI) change in tyre pressure has been detected in either a Stationary or Drive state. When the tyre pressure system detects a significant loss, or gain of tyre pressure, the tyre pressure monitor indicator icon is continuously illuminated on the instrument cluster and if equipped, a check tyre pressure type message is displayed on the driver information centre.

Both the indicator icon and driver information centre message can be cleared by adjusting the tyre pressures to the recommended kPa/PSI and driving the vehicle above 40 km/h (25 MPH) for at least 9 minutes.

If power is disconnected from the BCM or if the vehicle battery is disconnected each tire pressure sensor ID is retained but all of the tire pressure information is lost. Under these circumstances the BCM cannot assume that the tire pressures were maintained over an unknown period of time. Cars equipped with the driver information centre will display dashes and the scan tool will indicate a default tyre pressure value of 1020 kPa (148 PSI) for each tyre. To reactivate the sensors, the vehicle must be driven above 40 km/h (25 MPH) for at least 9 minutes. When the sensors are activated, the driver information centre displays the current tyre pressures.

The BCM has the ability to detect malfunctions within the tire pressure monitor system. In the event a DTC is set, the tyre pressure monitor indicator icon on the instrument cluster will flash for 1 min. and then remain illuminated after the power switch is turned ON and the instrument cluster bulb check has been completed. Any malfunction detected will cause the driver information center to display a service tire monitor system type message.

© Copyright Chevrolet. All rights reserved

Fastener Tightening Specifications

Application	Specification	
	Metric	English
Wheel Nuts	140 N·m	100 lb ft

© Copyright Chevrolet. All rights reserved

Adhesives, Fluids, Lubricants, and Sealers

Application	Type of Material	GM Part Number	Canadian Part Number
Aluminium Wheels	Adhesive/Sealant	12378478	88900041
Wheels	Mounting Lubricant	12345884	5728223

© Copyright Chevrolet. All rights reserved

Tyre and Wheel Removal and Installation

Special Tools

- *CH 41013* Rotor Resurfacing Kit
- *CH 42450-A* Wheel Hub Resurfacing Kit

For equivalent regional tools, refer to Special Tools

Removal Procedure

1. Raise and support the vehicle. Refer to Lifting and Jacking the Vehicle .
2. Remove the wheel center cap, if equipped.
3. Remove the wheel centre cap nuts, if equipped.
4. Remove the wheel nuts.
5. Remove the tyre and wheel assembly.

   Caution: Never use heat to loosen a tight wheel bolt or nut. This can shorten the life of wheel and damage wheel bearings.

6. If the tyre and wheel assembly is difficult to remove or cannot be removed, perform the following steps:
   6.1. Apply a small amount of penetrating oil to the wheel nuts, and the centre hub. Allow a few moments for the penetrating oil to work.
   6.2. Loosen each wheel nut 2 complete turns.
   6.3. Lower the vehicle.
   6.4. Rock the vehicle from side to side.
   6.5. Repeat the procedure if necessary.
7. If the tyre and wheel assembly still does not loosen, perform the following:
   7.1. Start the engine.
   7.2. Allow the vehicle to move forward, and quickly apply the brakes. Repeat this procedure in reverse.
   7.3. Repeat this procedure if necessary.
8. With the tyre and wheel assembly loose, raise and support the vehicle.
9. Remove the tyre and wheel assembly.

   Caution: Before installing wheels, remove any build-up of corrosion on the wheel mounting surface by scraping and wire brushing. Installing wheels without good metal-to-metal contact at the mounting surfaces can cause wheel bolts or nuts to loosen, which can later allow a wheel bolt or nut to come off while the vehicle is moving.

Wheel bolts or nuts must be tightened in sequence and to proper torque to avoid bending the wheel, brake drum or rotor.

Note:

- Wear approved safety glasses when performing the following service procedures.
- DO NOT use power grinders to clean any of the brake rotor or brake drum to wheel contact areas.

10. Using a wire brush or wire wheel, clean the rotor to the wheel or brake drum to wheel hub contact area.
11. Where possible, use the *CH 41013* kit to clean the contact areas of the wheel to brake rotor or brake drum.

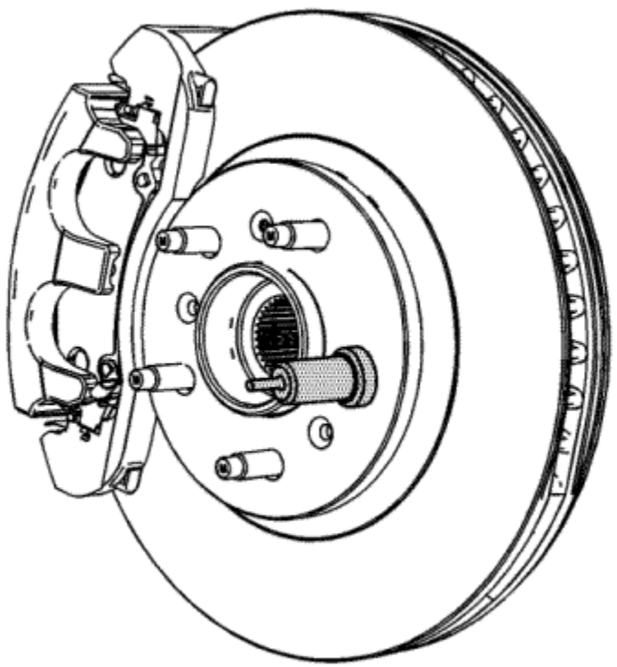

12. Using the *CH 42450-A* kit, clean the surface around the wheel studs.
13. Clean the threads of the wheel studs. If the threads are damaged, replace the wheel stud.
    - For the front wheel stud replacement, refer to Wheel Stud Replacement .
    - For the rear wheel stud replacement, refer to Wheel Stud Replacement .
14. After cleaning all the contact areas, use brake clean or denatured alcohol to remove all the penetrating oil, dirt and debris from the wheel nuts, brake rotor or brake drum.

Installation Procedure

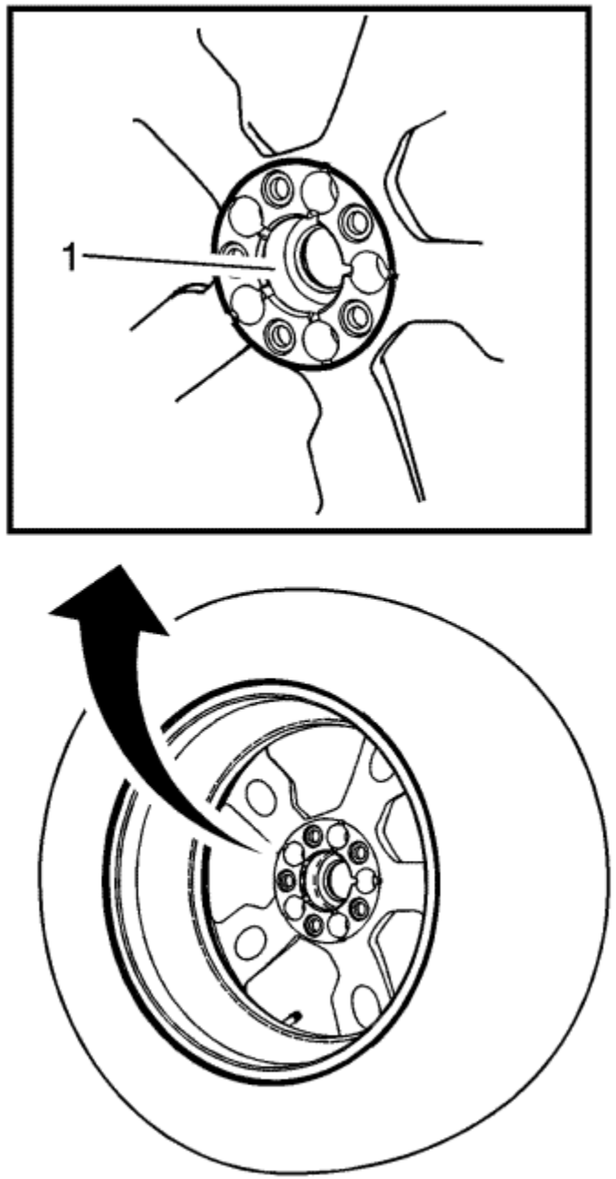

Note: Only apply a small amount the lubricant to the pilot hole of the wheel and NOT the wheel bearing flange. DO NOT apply it to the entire pilot hole of the wheel.

1. Apply a small amount of lubricant to the inner diameter of the wheel hub pilot hole (1) where it contacts the with the wheel bearing/hub flange. Refer to Adhesives, Fluids, Lubricants, and Sealers
2. Install the tyre and wheel assembly.
3. Hand start the wheel nuts.

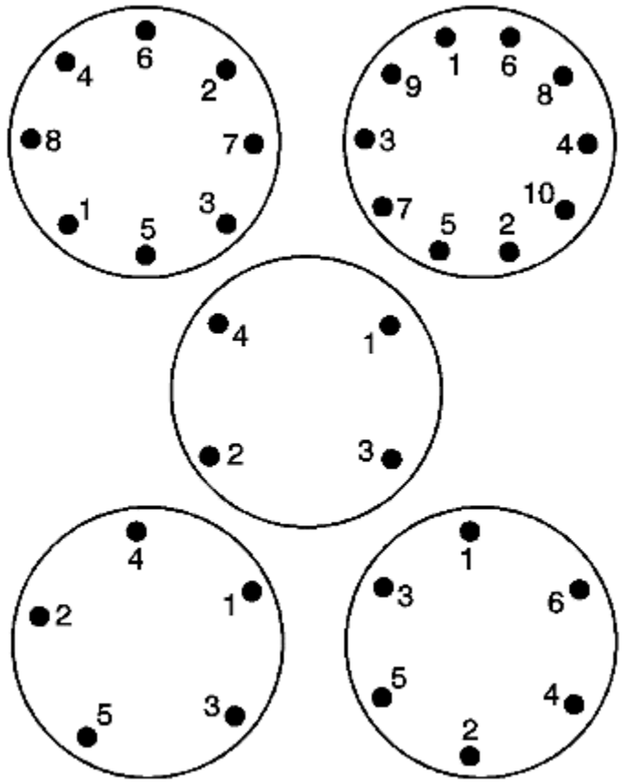

Caution: Improperly tightened wheel bolts or nuts can lead to brake pulsation and rotor damage. In order to avoid expensive brake repairs, evenly tighten the wheel bolts or nuts to the proper torque specification.

4. Using the proper size socket and the torque wrench, tighten the wheel nuts in the proper sequence. Refer to Fastener Tightening Specifications
5. Install the wheel centre cap, if required.
6. Install the wheel cap nuts, if required.
7. Remove the support and lower the vehicle.

&#169© Copyright Chevrolet. All rights reserved

Special Tools

Illustration	Tool Number/ Description
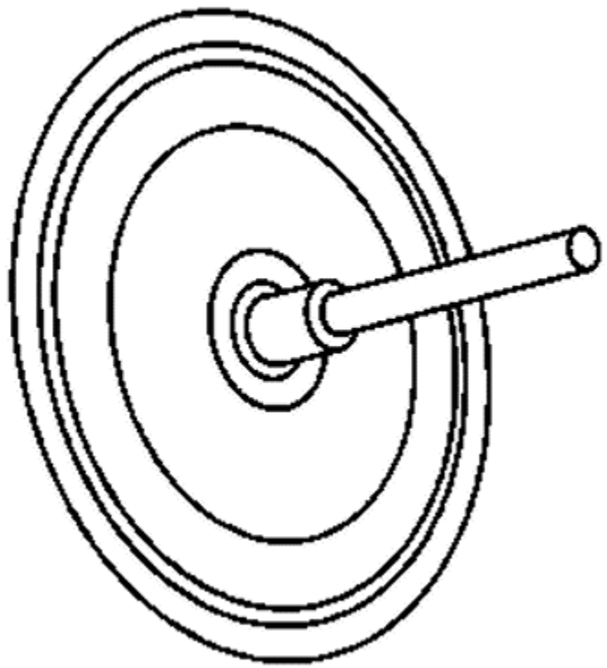	CH 41013 J 41013 Rotor Resurfacing kit
	CH 42450-A J 42450-A

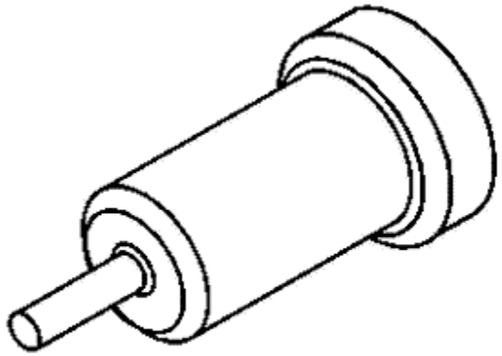	Wheel Hub Resurfacing Kit

© Copyright Chevrolet. All rights reserved

Wheel Alignment Specifications

Suspension	Camber		Cross Camber (L-R)	Caster		Cross Caster (L-R)	Total Toe	Steering Wheel Angle	Thrust Angle
	Left	Right		Left	Right				
All Front	-0.45° ± 0.75°	-0.45° ± 0.75°	0.00° ± 0.75°	4.35° ± 0.75°	4.35° ± 0.75°	0.00° ± 0.75°	+0.20° ± 0.20°	0.00° ± 3.50°	-
All Rear	-1.40° ± 0.75°	-1.40° ± 0.75°	NR	NR	NR	NR	0.00° ± 0.40°	-	0.00°±0.30°

© Copyright Chevrolet. All rights reserved

Fastener Tightening Specifications

Application	Specification	
	Metric	English
Steering Linkage Inner Tie Rod Nut	60 N·m	44 lb ft
Front Strut to Knuckle Nuts		
First Pass	85 N·m	63 lb ft
Final Pass	additional 65 degrees	
Rear Axle Bracket Bolts (1)		
First Pass	90 N·m	66 lb ft
Final Pass	additional 45 degrees	
Replace Bolts (1)		

© Copyright Chevrolet. All rights reserved

Wheel Alignment Measurement

Steering and vibration complaints are not always the result of improper alignment. One possible cause is wheel and tyre imbalance. Another possibility is tyre lead due to worn or improperly manufactured tyres. Lead/pull is defined as follows: At a constant motorway speed on a typical straight road, lead/pull is the amount of effort required at the steering wheel to maintain the vehicle's straight path. Lead is the vehicle deviation from a straight path on a level road without pressure on the steering wheel.

Before performing any adjustment affecting wheel alignment, perform the following inspections in order to ensure correct alignment readings:

- Inspect for visible damage to the suspension components and replace as necessary.
- Inspect the tyres for the proper inflation and irregular tyre wear. Refer to Vehicle Certification, Tyre Placard, Anti-Theft, and Service Parts ID Label .
- Inspect the runout of the wheels and the tyres. Refer to Tire and Wheel Runout Specifications .
- Inspect the wheel bearings for backlash and excessive play.
- Inspect the ball joints for looseness or wear.
- Inspect the track rod ends for looseness or wear.
- Inspect the control arms and stabiliser shaft for looseness or wear.
- Inspect the steering gear for looseness at the frame. Refer to Fastener Tightening Specifications .
- Inspect the struts/shock absorbers for wear, leaks, and any noticeable noises.
- Inspect the vehicle trim height. Refer to Trim Height Inspection .
- Inspect the steering wheel for excessive drag or poor return due to stiff or rusted linkage or suspension components.
- Inspect the fuel level. The fuel tank should be full or the vehicle should have a compensating load added.

Give consideration to excess loads, such as tool boxes, sample cases, etc. If normally carried in the vehicle, these items should remain in the vehicle during alignment adjustments. Give consideration also to the condition of the equipment being used for the alignment. Follow the equipment manufacturer's instructions.

Satisfactory vehicle operation may occur over a wide range of alignment settings. However, if the setting exceeds the service allowable specifications, correct the alignment to the service preferred specifications. Refer to Wheel Alignment Specifications .

Perform the following steps in order to measure the front and rear alignment angles:

1. Install the alignment equipment according to the manufacturer's instructions.
2. Jounce the front and the rear bumpers 3 times prior to checking the wheel alignment.
3. Measure the alignment angles and record the readings.

Note:
- Record the "Before" and "After" alignment measurements.

- When performing adjustments to vehicles requiring a 4-wheel alignment, set the rear toe adjustment first in order to obtain proper front alignment angles.

4. Adjust alignment angles to vehicle specification, if necessary. Refer to Wheel Alignment Specifications .

&#169© Copyright Chevrolet. All rights reserved

Wheel Alignment - Steering Wheel Angle and/or Front Toe Adjustment

Note: Before performing any adjustments affecting the wheel alignment, refer to Wheel Alignment Measurement .

1. Ensure that the steering wheel is set in a straight ahead position and centred.
2. Loosen the tie rod nut (5).
3. Adjust the toe to specification. Refer to Wheel Alignment Specifications

   Caution: Refer to Fastener Caution in the Preface section.

4. Tighten the tie rod nut (5).

   Tighten
   Tighten the tie rod nut (5) to 60 N·m (44 lb ft).

© Copyright Chevrolet. All rights reserved

Rear Camber Adjustment

The rear camber is not adjustable. If the rear camber angle is not within specifications, inspect for suspension support misalignment or rear suspension damage. Replace any damaged suspension components as necessary.

© Copyright Chevrolet. All rights reserved

Rear Toe Adjustment

The rear toe is not adjustable. If the rear toe angle is not within specifications, inspect for suspension support misalignment or rear suspension damage. Replace any damaged suspension components as necessary.

© Copyright Chevrolet. All rights reserved

Caster Description

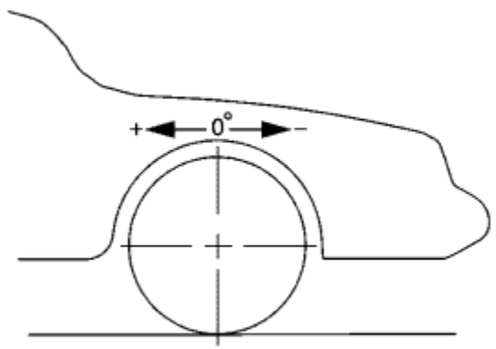

Caster is the tilting of the uppermost point of the steering axis either forward or backward, when viewed from the side of the vehicle. A backward tilt is positive (+) and a forward tilt is negative (-). Caster influences directional control of the steering but does not affect the tyre wear. Caster is affected by the vehicle height, therefore it is important to keep the body at its designed height. Overloading the vehicle or a weak or sagging rear spring will affect caster. When the rear of the vehicle is lower than its designated trim height, the front suspension moves to a more positive caster. If the rear of the vehicle is higher than its designated trim height, the front suspension moves to a less positive caster.

With too little positive caster, steering may be touchy at high speed and wheel returnability may be diminished when coming out of a turn. If one wheel has more positive caster than the other, that wheel will pull toward the centre of the vehicle. This condition will cause the vehicle to pull or lead to the side with the least amount of positive caster.

Cross Caster is the difference between the left caster value and the right caster value.

Cross caster = L caster - R caster

© Copyright Chevrolet. All rights reserved

Fastener Tightening Specifications

Application	Ref No.*	Quantity	Size	Specification	
				Metric	English
A/Trans Auxiliary Fluid Pump Bolt	438	1	M5x16 mm	4 N·m	35 lb in
A/Trans Auxiliary Fluid Pump Bolt	431	4	M8x51 mm	9 N·m	80 lb in
A/Trans Auxiliary Fluid Pump Wiring Harness Bolt	302	1	M6x20 mm	9 N·m	80 lb in
A/Trans Case Cover Bolt	48	9	M8x30 mm	22 N·m	16 lb ft
A/Trans Control Wiring Harness Shield Bolt - External	600	3	M6x16 mm	9 N·m	80 lb in
A/Trans Fluid Pressure Test Hole Plug	316	1	1/8"-27 NPTF	11 N·m	97 lb in
A/Trans Fluid Pump Bolt	300	8	M6x25 mm	9 N·m	80 lb in
A/Trans Fluid Pump Cover Bolt	403	19	M6x25 mm	9 N·m	80 lb in
A/Trans Fluid Trough Bolt	313	2	M6x20 mm	9 N·m	80 lb in
A/Trans Manual Shift Shaft Position Switch Bolt	512	2	M6x25 mm	9 N·m	80 lb in
A/Trans Output Speed Sensor Bolt	37	1	M6x30 mm	9 N·m	80 lb in
A/Trans Wiring Harness Shield Bolt - External	46	1	M6x20 mm	9 N·m	80 lb in
Auxiliary Fluid Motor Retainer Bolt	304	1	M6x20 mm	9 N·m	80 lb in
Auxiliary Pump Press Plug	307	1	1/8"-27 NPTF	11 N·m	97 lb in
Case Cover Stud	49	2	M8x30 mm	22 N·m	16 lb ft
Case Extension Bolt	228	3	M8x35.7 mm	22 N·m	16 lb ft
Centre Support Bolt	90	9	M10x25 mm	58 N·m	42 lb ft
Control Valve Body Bolt	10	1	M6x80 mm	9.5 N·m	84 lb in
Control Valve Body Bolt	13	5	M6x65 mm	9.5 N·m	84 lb in
Control Valve Body Bolt	16	4	M6x80 mm	9.5 N·m	84 lb in
Control Valve Body Bolt	17	5	M6x42 mm	9.5 N·m	84 lb in
Control Valve Body Bolt	21	12	M6x48 mm	9.5 N·m	84 lb in
Control Valve Body Cover Bolt	1	10	M6x35 mm	9 N·m	80 lb in
Control Valve Channel Plate Bolt	501	3	M6x20 mm	9 N·m	80 lb in
Drive Motor Generator Position Switch Sensor Bolt	654	3	M5x16 mm	7.25 N·m	64 lb in

Drive Motor/Generator Stator Bolt	72	8	M6x20 mm	10 N·m	89 lb in
Filler Hole Plug	312	1	M20x17.6 mm	20 N·m	15 lb ft
Fluid Cooler Outlet Pipe Assembly Bolt	6	2	M5x16 mm	7.25 N·m	64 lb in
Fluid Level Control Valve Stud	3 and 232	7	M6x40 mm	9 N·m	80 lb in
Front Differential Carrier Baffle Bolt	223	3	M6x20 mm	9 N·m	80 lb in
Front Differential Carrier Baffle Bolt	322	2	M6x20 mm	9 N·m	80 lb in
Front Differential Carrier Lubricant Pipe Bolt	219	1	M5x16 mm	7.25 N·m	64 lb in
Generator/Drive Motor Position Sensor Bolt	606	3	M5x16 mm	7.25 N·m	64 lb in
Park Pawl Actuator Bolt	700	2	M6x25 mm	9 N·m	80 lb in
Power Inverter Module Cable Connector Bolt - Internal	76	6	M6x20 mm	9 N·m	80 lb in
Power Inverter Module Cable Stud	99	6	M6x20 mm	9 N·m	80 lb in
Power Inverter Module Cable Terminal Insulator Block Bolt	208	2	M6x20 mm	9 N·m	80 lb in
Torque Damper and Differential Housing Bolt	34	17	M10x35 mm	65 N·m	48 lb ft
Transmission Fluid Drain Plug	224 and 225	2	1/8"-27 NPTF	11 N·m	97 lb in
Variable Drive Pulley Retaining Nut	11	1	M6x1 mm	9 N·m	80 lb in
Transmission Mount Transmission - Side Bracket Bolts (Qty: 5) (1)					
First Pass	--	--	--	50 N·m	37 lb ft
Final Pass	--	--	--	Additional 50 degrees	Additional 50 degrees
Transmission Mount - Left Side Bolts to Bracket (Qty: 3) (1)					
First Pass	--	--	--	100 N·m	74 lb ft
Final Pass	--	--	--	Additional 90-105 degrees	Additional 90-105 degrees
Transmission Mount - Left Side Nut (Qty: 1)	--	--	--	50 N·m	37 lb ft
Transmission Mount - Left Side Bolts to Body	--	--	--	58 N·m	43 lb ft
Transmission Mount Bracket Rear Bolts (Qty: 4)	--	--	--	100 N·m	74 lb ft
Transmission Rear Mount Bolt (Qty: 1)	--	--	--	100 N·m	74 lb ft
Variable Low and 1-2 Reverse Clutch Housing Bolt	651	7	M6x39.5 mm	15 N·m	11 lb ft
*Reference number refers to the component callout number in Disassembled Views (1) Use NEW fastener.					

© Copyright Chevrolet. All rights reserved

Transmission General Specifications

Name	4ET50
RPO Codes	MKA
Production Location	Ramos, Mexico
Transmission Drive	Front Wheel Drive Transaxle
1-EV Charge Deplete	Electrically Variable Drive Motor B Only
LS-EV Charge Deplete	Load Sharing Electrically Variable Drive Motor A & B
1-ICE Charge Sustaining	Drive Motor A Charging Drive Motor B Propulsion
LS-ICE	Load Sharing Electrically Variable Drive Motor & ICE
EV-Reverse	Electrically Variable
Torque Damper Size	266.4 mm
Pressure Tap	Line Pressure (Main and Auxiliary Pump same plug)
Transmission Fluid Type	DEXRON VI®
Transmission Type: Electric	Electrically Variable
Transmission Type: EV	58 kW(Drive Motor A (1) and 116 kW(Drive Motor B (2) Internal Motor
Transmission Type: T	Transaxle Mount
Transmission Type: 50	Product Series
Position Quadrant	P, R, N, D
Case Material	Die Cast Aluminium
Transmission Net Weight (Wet)	185 kg (407 pounds)
Maximum Trailer Towing Capacity	NA

© Copyright Chevrolet. All rights reserved

Fluid Pump Selective Specifications

Table 1: Fluid Main Pump Selective Specifications
Table 2: Fluid Auxiliary Pump Selective Specifications

Fluid Main Pump Selective Specifications

Fluid Pump Body Pocket Depth		Fluid Pump Gear Thickness		End-face Clearance	
Metric	English	Metric	English	Metric	English
10.064-10.056 mm	0.3962-0.3959 in	10.029-10.019 mm	0.3948-0.3944 in	0.045-0.029 mm	0.0017-0.0011 in
10.055-10.045 mm	0.3958-0.3954 in	10.018-10.008 mm	0.3944-0.3940 in	0.047-0.027 mm	0.0018-0.0010 in
10.044-10.036 mm	0.3954-0.3951 in	10.007-9.997 mm	0.3939-0.3935 in	0.045-0.029 mm	0.0017-0.0011 in

Fluid Auxiliary Pump Selective Specifications

Fluid Pump Body Pocket Depth		Fluid Pump Gear Thickness		End-face Clearance	
Metric	English	Metric	English	Metric	English
16.027-16.017 mm	0.6309-0.6305 in	15.997-15.987 mm	0.6298-0.6294 in	0.040-0.020 mm	0.0017-0.0011 in
16.016-16.006 mm	0.6305-0.6301 in	15.986-15.976 mm	0.6293-0.6289 in	0.040-0.020 mm	0.0018-0.0010 in
16.005-15.995 mm	0.6301-0.6297 in	15.975-15.965 mm	0.6289-0.6285 in	0.040-0.020 mm	0.0017-0.0011 in

© Copyright Chevrolet. All rights reserved

Taper Bearing Preload Selective Specifications

Front Differential Drive Pinion Gear and Differential Thrust Washer Selection Chart Thrust Washer O.D. Colour Chart	Washer Thickness	
	Metric	English
Dark Blue (Left Side)	0.429 mm	0.016 in
Light Green (Left Side)	0.561 mm	0.022 in
Plain (Left Side)	0.696 mm	0.027 in
White (Left Side)	0.823 mm	0.032 in
Light Blue (Left Side)	0.957 mm	0.037 in
Dark Blue (Right Side)	0.609 mm	0.023 in
Light Green (Right Side)	0.721 mm	0.028 in
Plain (Right Side)	0.810 mm	0.031 in
White (Right Side)	0.912 mm	0.035 in
Light Blue (Right Side)	1.026 mm	0.040 in

© Copyright Chevrolet. All rights reserved

Range Reference

Range	CB1-2R Clutch (C1)	C2-3-4 Clutch (C2)	C1-3R Clutch (C3)	DBC C5*
Park/Neutral	--	--	--	--
Engine Start	--	--	Applied	Applied
Reverse Output Split Engine Off	-	Applied	--	--
Reverse Output Split Engine On	--	Applied	Applied	--
Reverse Series Mode Engine Off	Applied	--	--	--
Reverse Series Mode Engine On	Applied	-	Applied	-
Drive Series Mode Engine Off	Applied	--	--	--
Drive Series Mode Engine On	Applied	-	Applied	-
Drive Output Split Engine Off	-	Applied	--	--
Drive Output Split Engine On	--	Applied	Applied	--
Power Off Low Default	Applied	--	--	--
Power Off High Default	-	Applied	--	--
* Damper Bypass Clutch				

© Copyright Chevrolet. All rights reserved

Shift Solenoid Valve State and Gear Ratio

Gear	Shift SOL 1 (Y)	Shift SOL 2 (X)	Modulated Line Pressure PC SOL 1 N.H.	C 2-3-4 CL PC SOL 2 N.H.	CB 1-2R CL PC SOL 3 N.H.	C1-3R CL PC SOL 4 N.L.	Damper Bypass Valve PC SOL 5 N.L.	Gear Ratio
Park/Neutral	OFF	OFF	ON	OFF	OFF	OFF	OFF	-
Engine Start	OFF	ON	ON	OFF	OFF	ON	ON	-
Reverse Output Split Engine OFF	ON	OFF	ON	ON	OFF	OFF	OFF	EV
Reverse Output Split Engine On	ON	ON	ON	ON	OFF	ON	OFF	-
Reverse Series Mode Engine Off	OFF	OFF	ON	OFF	ON	OFF	OFF	EV
Reverse Series Mode Engine On	OFF	ON	ON	OFF	ON	ON	OFF	EV
Drive Series Mode Engine Off	OFF	OFF	ON	OFF	ON	OFF	OFF	EV
Drive Series Mode Engine On	OFF	ON	ON	OFF	ON	ON	OFF	EV
Drive Output Split Engine Off	ON	OFF	ON	ON	OFF	OFF	OFF	EV
Drive Output Split Engine On	ON	ON	ON	ON	OFF	ON	OFF	EV
Power Off High Default	OFF	OFF	ON	ON	ON	OFF	OFF	-

For shift solenoids 1 and 2, "ON" = Solenoid Energised (Pressurised) "OFF" = Solenoid De-energised (No Pressure).

EV = Electrically Variable

For pressure control solenoids, "ON" = Pressurised, "OFF" = No Pressure

© Copyright Chevrolet. All rights reserved

Solenoid Valve Pressure Specifications

Table 1: Main Pump (Engine On Hood Open)
Table 2: Auxiliary Pump (Engine Off Hood Closed)

Note: Pressure readings must be taken with transmission at normal operating temperatures.

Main Pump (Engine On Hood Open)

Line PC Solenoid Valve Pressure	Actual Pressure	
Requested Pressure (kPa)	Metric	English
0	172-448 kPa	25-65 psi
90	310-586 kPa	45-85 psi
213	413-827 kPa	60-120 psi
336	620-1034 kPa	90-150 psi
459	861-1275 kPa	125-185 psi
582	1068-1482 kPa	155-215 psi
705	1275-1689 kPa	185-245 psi
829	1482-1896 kPa	215-275 psi

Auxiliary Pump (Engine Off Hood Closed)

Line PC Solenoid Valve Pressure	Actual Pressure	
Requested Pressure (kPa)	Metric	English
0	172-448 kPa	25-65 psi
90	275-551 kPa	40-80 psi
213	413-827 kPa	60-120 psi
336	551-965 kPa	80-140 psi
459	586-999 kPa	85-145 psi
582	620-1034 kPa	90-150 psi

705	655-1068 kPa	95-155 psi
829	827-1241 kPa	120-180 psi

© Copyright Chevrolet. All rights reserved

Transmission Internal Mode Switch Logic

Internal Mode Switch (IMS) IMS Circuits/Parameter	Selector Position			
	Park	Reverse	Neutral	Drive
Direction Switch Operating Conditions: Ignition ON, range selector in appropriate gear				
Direction IMS D1	HIGH	HIGH	LOW	LOW
Direction IMS D2	LOW	LOW	HIGH	HIGH
Direction IMS R1	HIGH	LOW	LOW	HIGH
Direction IMS R2	LOW	HIGH	HIGH	LOW
Direction IMS Start	LOW	HIGH	LOW	HIGH
Range Switch Operating Conditions: Ignition ON, range selector in appropriate gear				
IMS A	LOW	LOW	HI	HI
IMS B	HI	LOW	LOW	LOW
IMS C	HI	HI	HI	LOW
IMS P	LOW	HI	LOW	HI
Always HIGH status: Open/short to voltage condition Always LOW status: Short to ground condition Every status HIGH for either switch indicates an open ground circuit or connector for that portion of the IMS.				

© Copyright Chevrolet. All rights reserved

Transmission Fluid Pressure Switch Logic

Transmission Fluid Pressure (TFP) Switch Logic Gear	TFP SW 1	*TFP SW 3	TFP SW 4	TFP SW 5
Park	High	Low	Low	High
Engine Start	High	High	Low	High
Reverse - Output Split (Engine OFF)	High	High	High	High
Reverse - Output Split (Engine ON)	High	Low	High	High
Reverse - Series Mode (Engine OFF)	High	Low	Low	Low
Reverse - Series Mode (Engine ON)	High	High	Low	Low
Neutral	High	Low	Low	High
Drive - Series Mode (Engine OFF)	High	Low	Low	Low
Drive - Series Mode (Engine ON)	High	High	Low	Low
Drive - Output Split (Engine OFF)	High	High	High	High
Drive - Output Split (Engine ON)	High	Low	High	High
Power Off - Default	Low	Low	Low	Low

High = 12V (Switch Open or Pressurised)

Low = 0 volts (Switch Closed or No Pressure)

Note: All TFP switches are normally closed (NC)

*TFP switch 2 does not exist

© Copyright Chevrolet. All rights reserved

Automatic Transmission Controls Schematics

Figure 1: Internal Mode Switch
Figure 2: S109 Sport Mode Switch
Figure 3: Pressure Controls, Shift Controls and Speed Sensor

© Copyright Chevrolet. All rights reserved

Disassembled Views

Figure 1: Case and Associated Parts
Figure 2: Transmission Case Assembly (1 of 2)
Figure 3: Transmission Case Assembly (2 of 2)
Figure 4: Torque Damper and Differential (w/Fluid Pump) Housing Assembly
Figure 5: Fluid Pump Assembly
Figure 6: Control Valve Body Assembly (1 of 2)
Figure 7: Control Valve Body Assembly (2 of 2)
Figure 8: Case Cover Assembly
Figure 9: Variable Hi and 2-3-4 Clutch Assembly
Figure 10: Centre (w/Variable Low and 1-2 Reverse Clutch) Support Assembly (1 of 2)
Figure 11: Centre (w/Variable Low and 1-2 Reverse Clutch Support Assembly (2 of 2)
Figure 12: 1-3 Reverse Clutch Assembly
Figure 13: Front Differential Drive Pinion (w/Transfer Gear) Gear Assembly
Figure 14: Front Differential Carrier Assembly
Figure 15: Park System Components

© Copyright Chevrolet. All rights reserved

Component Location

Component Locations

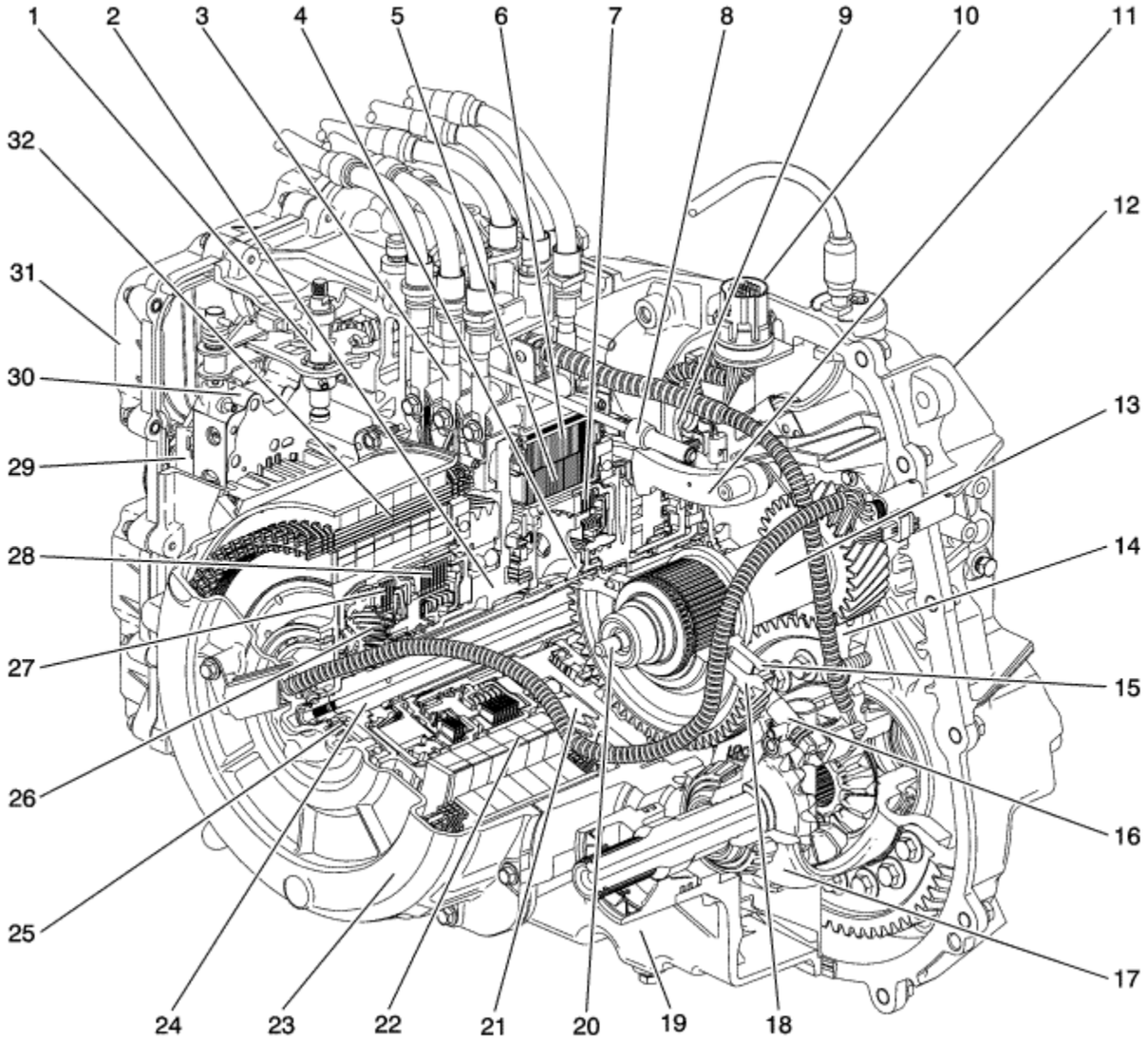

(1) Manual Shift Shaft
(2) Centre Support
(3) Drive Motor/Generator Power Inverter Module Cable Assembly - 3 Phase - B
(4) Input Clutch Hub
(5) Generator/Drive Motor Rotor Assembly - Unit A
(6) Generator/Drive Motor Stator Assembly - Unit A
(7) 1-3 Reverse Clutch Assembly

(8) Park Pawl Actuator Assembly
(9) A/Trans Torque Damper Assembly
(10) A/Trans Wiring Harness Assembly
(11) Park Pawl
(12) Torque Damper and Differential (w/Fluid Pump) Housing Assembly
(13) Front Differential Drive Pinion Gear
(14) Front Differential Ring Gear
(15) Park Gear
(16) A/Trans Output Speed Sensor Assembly
(17) Front Differential Carrier Assembly
(18) Front Differential Transfer Driven Gear
(19) A/Trans Case Assembly
(20) Front Differential Transfer Drive Gear Fluid Passage Tube Assembly
(21) Front Differential Transfer Drive Gear
(22) Drive Motor/Generator Rotor Assembly - Unit B
(23) A/Trans Case Cover Assembly
(24) Output Sun Gear Shaft
(25) Drive Motor/Generator Position Sensor Stator Assembly
(26) Output Carrier Assembly - C2
(27) Variable Hi and 2-3-4 Clutch Assembly
(28) Variable Low and 1-2 Reverse Clutch Assembly
(29) Control Solenoid (w/Body and TCM) TEHCM Valve Assembly
(30) Control Valve Body
(31) Control Valve Body Cover Assembly
(32) Drive Motor/Generator Rotor Assembly - Unit B

© Copyright Chevrolet. All rights reserved

Bushing, Bearing, and Washer Locations

Location Of The Bushings, Bearings, and Washers

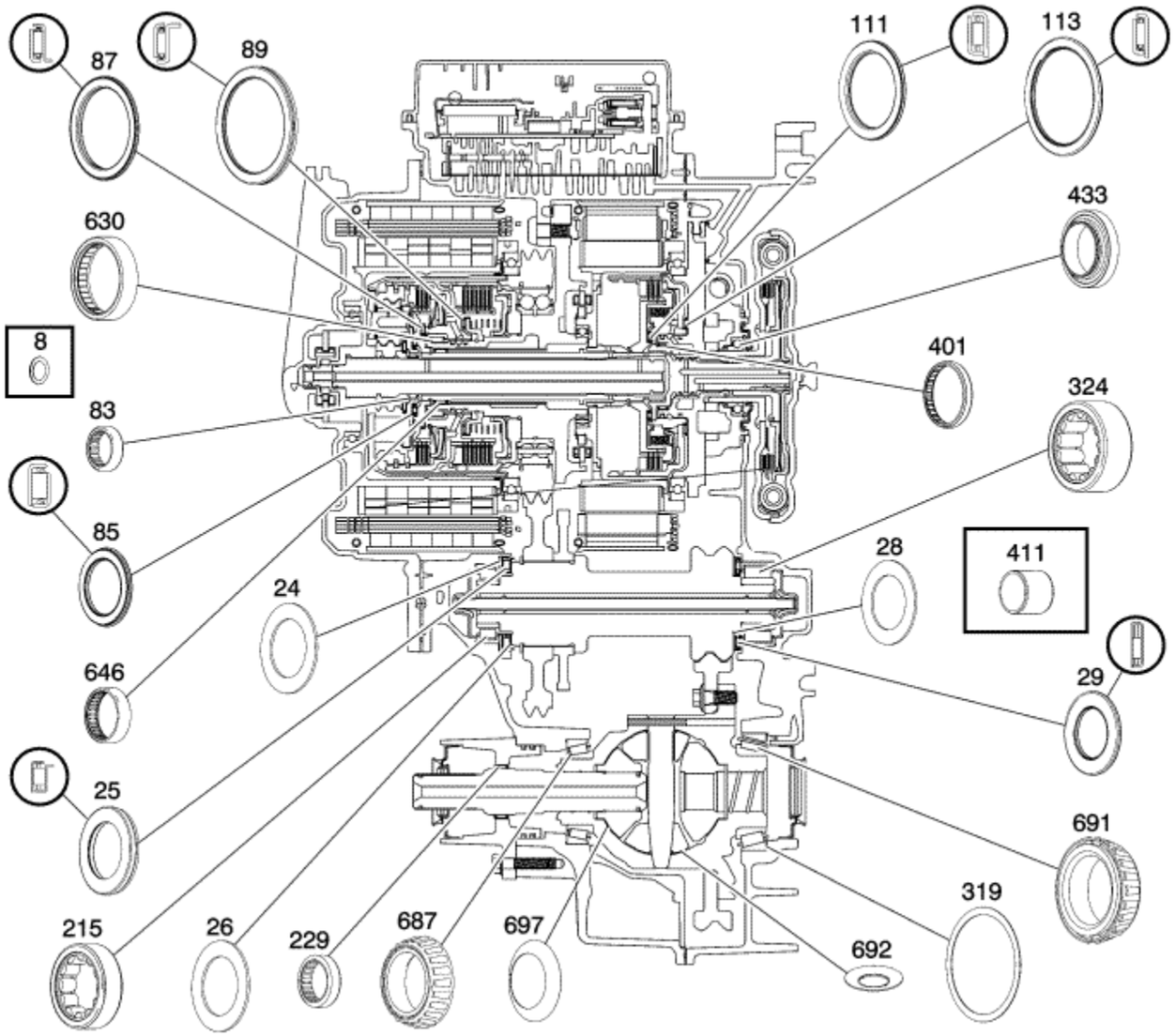

(8) Transmission Fluid Cooler Outlet Washer
(24) Front Differential Bearing Spacer
(25) Front Drive Pinion Gear Shaft Thrust Bearing Assembly (LHS)
(26) Front Differential Drive Pinion Gear Bearing Thrust Washer -Selective (LHS)
(28) Front Differential Drive Pinion Gear Bearing Thrust Washer -Selective (RHS)
(29) Front Drive Pinion Gear Shaft Thrust Bearing Assembly Selective (RHS)
(83) Output Carrier Roller Bearing Assembly

(85) Output Carrier Thrust Bearing Assembly
(87) Variable Hi and 2-3-4 Clutch Hub Thrust Bearing Assembly
(89) Variable Hi and 2-3-4 Clutch Housing Thrust Bearing Assembly
(111) Input Carrier Thrust Bearing Assembly
(113) 1-3 Reverse Clutch Thrust Bearing Assembly
(215) Front Differential Drive Pinion Gear Roller Bearing Assembly
(229) Front Wheel Drive Shaft Bearing Assembly
(319) Front Differential Bearing Washer - Selective
(324) Front Differential Drive Pinion Gear Roller Bearing Assembly
(401) Input Shaft Bearing Assembly
(411) A/Trans Fluid Pump Drive Shaft Bushing
(433) A/Trans Torque Damper Bearing Assembly
(630) Centre Support Roller Bearing Assembly
(646) Input Sun Gear Shaft Roller Bearing Assembly
(687) Front Differential Carrier Bearing Assembly (LHS)
(691) Front Differential Carrier Bearing Assembly (RHS)
(692) Differential Pinion Gear Thrust Washer
(697) Differential Side Gear Thrust Washer

© Copyright Chevrolet. All rights reserved

Seal Locations

Figure 1: Seal Locations #1
Figure 2: Seal Locations #2

© Copyright Chevrolet. All rights reserved

Ball Check Valve Locations

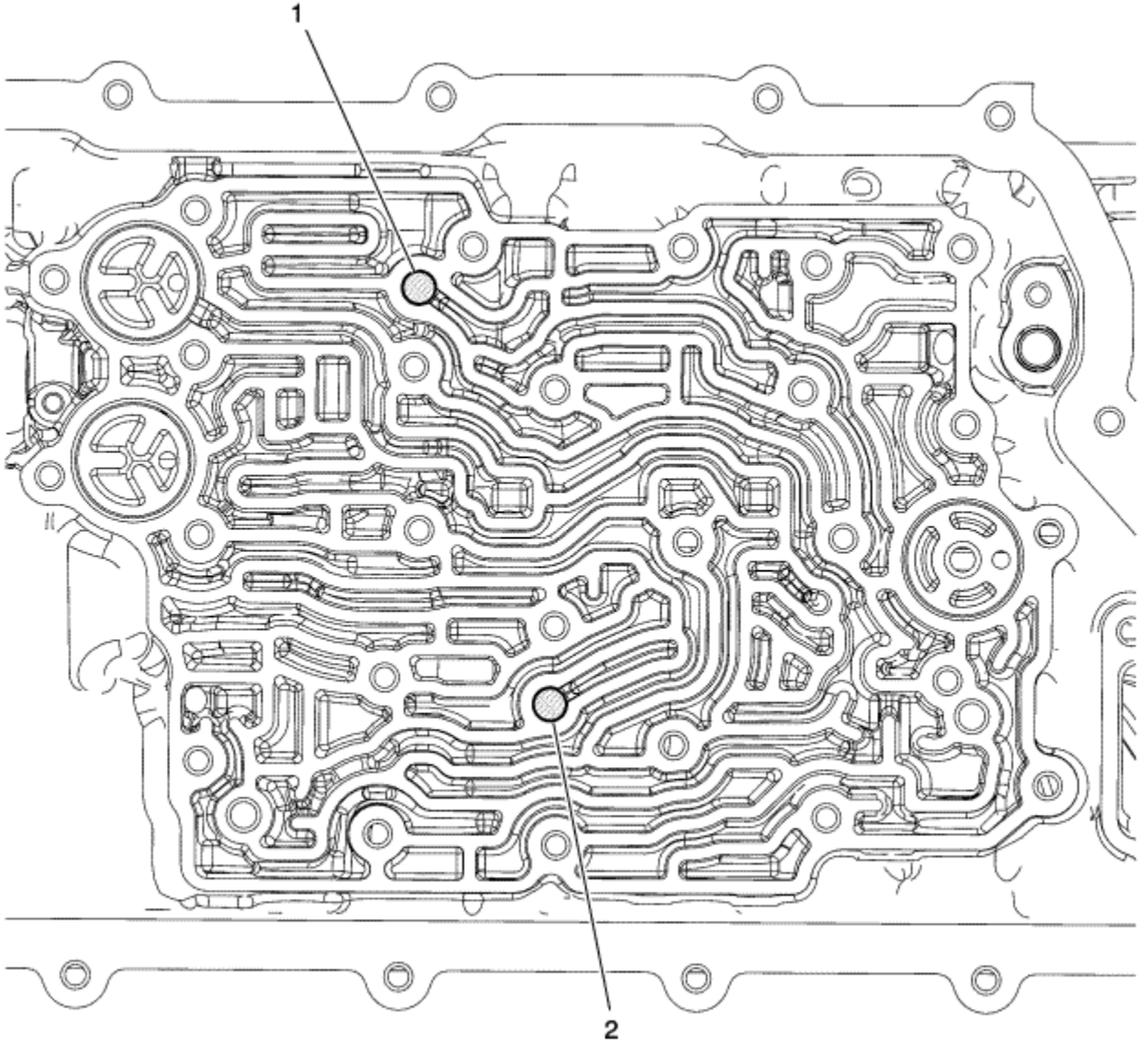

Transmission Case - Ball Check Valve Location

Callout	Ball Check Valve I.D.	Input Oil	Output Oil
1	#2	B Cooling Feed	Motor B Cooling
2	#1	A Cooling Feed	Motor A Cooling

© Copyright Chevrolet. All rights reserved

Fluid Passages

Figure 1: Torque Damper and Differential Housing - Case Side
Figure 2: Fluid Pump Body - Torque Damper and Differential Housing Side
Figure 3: Fluid Pump Body - Fluid Pump Cover Side
Figure 4: Fluid Pump Cover - Fluid Pump Body Side
Figure 5: Fluid Pump Cover - Case Side
Figure 6: Centre Support - Case Side
Figure 7: Case - Torque Damper and Differential Housing Side
Figure 8: Case - Case Cover Side
Figure 9: Case Cover - Case Side
Figure 10: Case - Control Valve Body Side
Figure 11: Control Valve Body Spacer Plate - Case Side
Figure 12: Control Valve Body Spacer Plate - Control Valve Body Side
Figure 13: Control Valve Body - Case Side
Figure 14: Control Valve Body - Control Valve Channel Plate Side
Figure 15: Control Valve Channel Plate - Control Valve Body Side
Figure 16: Control Valve Channel Plate - Control Solenoid (w/Body and TCM) TECHM Valve Side
Figure 17: Control Solenoid (w/Body and TCM) TEHCM Valve - Control Valve Channel Plate Side
Figure 18: Case Extension Assembly - Case Side

© Copyright Chevrolet. All rights reserved

DTC P0601-P0606, P060B, P062F, P16F3, P16F7, P16F8, or P179B - TCM

Diagnostic Instructions

- Perform the Diagnostic System Check - Vehicle prior to using this diagnostic procedure.
- Review Strategy Based Diagnosis for an overview of the diagnostic approach.
- Diagnostic Procedure Instructions provides an overview of each diagnostic category.

DTC Descriptor

DTC P0601: Control Module Read Only Memory

DTC P0602: Control Module Not Programmed

DTC P0603: Control Module Long Term Memory Reset

DTC P0604: Control Module Random Access Memory

DTC P0606: Control Module Internal Performance

DTC P060B: Control Module Analog to Digital Performance

DTC P062F: Control Module Long Term Memory Performance

DTC P16F3: Control Module Redundant Memory Performance

DTC P16F7: Control Module Pressure Control Solenoid Command Incorrect

DTC P16F8: Control Module Clutch Command Incorrect

DTC P179B: Range State Command Circuit

Circuit/System Description

This is an internal fault detection of the transmission control module (TCM). The transmission control module is part of the control solenoid valve assembly, and is not serviced separately. This fault is handled inside the transmission control module and no external circuits are involved.

Conditions for Running the DTC

The system voltage is 9.5-18V.

Conditions for Setting the DTC

The transmission control module has detected an internal malfunction.

Action Taken When the DTC Sets

- DTCs P0601, P0602, P0603, P0604, P0606, P060B, P062F, P16F3, P16F7, P16F8, and P179B are Type A DTCs.
- The TCM shifts to a default mode and turns OFF.

Conditions for Clearing the DTC

DTCs P0601, P0602, P0603, P0604, P0606, P060B, P062F, P16F3, P16F7, P16F8, and P179B are Type A DTCs.

Diagnostic Aids

When attempting to set transmission control module internal DTCs, vehicle ON for at least 1 minute, and then vehicle OFF for 30 seconds. Following this procedure will allow for a complete transmission control module shutdown.

Reference Information

Schematic Reference

Automatic Transmission Controls Schematics

Connector End View Reference

Component Connector End Views

Description and Operation

Electronic Component Description

Electrical Information Reference

- Circuit Testing
- Connector Repairs
- Testing for Intermittent Conditions and Poor Connections
- Wiring Repairs

DTC Type Reference

Powertrain Diagnostic Trouble Code (DTC) Type Definitions

Scan Tool Reference

Control Module References for scan tool information

Circuit/System Verification

Verify that DTC P0601, P0602, P0603, P0604, P0606, P060B, P062F, P16F3, P16F7, P16F8 or P179B is not set.

If the DTC is set, program the Q8 Control Solenoid Valve Assembly. If the DTC resets, replace the Q8 Control Solenoid Valve Assembly.

Component Testing

Perform the Control Solenoid Valve and Transmission Control Module Assembly Inspection .

Repair Instructions

Perform the Diagnostic Repair Verification after completing the diagnostic procedure.

Control Module References for Control Solenoid Valve Assembly and Transmission Control Module Assembly replacement, programming, and setup.

© Copyright Chevrolet. All rights reserved

DTC P0634

Diagnostic Instructions

- Perform the Diagnostic System Check - Vehicle prior to using this diagnostic procedure.
- Review Strategy Based Diagnosis for an overview of the diagnostic approach.
- Diagnostic Procedure Instructions provides an overview of each diagnostic category.

DTC Descriptor

DTC P0634: Transmission Control Module (TCM) Overtemperature

Circuit/System Description

The transmission control module (TCM) has a built-in temperature sensor to detect possible over-temperature condition of the transmission control module. This temperature sensor is used to protect the TCM from heat damage due to an over temperature condition. The transmission control module is part of the control solenoid valve assembly and is not serviced separately.

Conditions for Running the DTC

- The system voltage is 11-18V.
- The TCM temperature is at least -50°C (-58°F) and no more than 146°C (295°F) for 5 seconds.

Conditions for Setting the DTC

- The TCM temperature is greater than 141°C (286°F) for 2 seconds.
- The system voltage is greater than 18 V and the transmission control module temperature is greater than 50°C (122°F).

Action Taken When the DTC Sets

- DTC P0634 is a Type A DTC.
- The TCM shifts to a default gear and turns OFF.

Conditions for Clearing the DTC

DTC P0634 is a Type A DTC.

Diagnostic Aids

Inspect the transmission cooler, transmission fluid lines, engine cooling system, and transmission fluid level, inspect for any obstructions in the cooling system airflow which may cause an overheat condition. Enquire about any towing by the customer or extreme driving conditions. An engine cooling system or transmission cooling system malfunction may cause this diagnostic to set.

Reference Information

Schematic Reference

Automatic Transmission Controls Schematics

Connector End View Reference

Component Connector End Views

Description and Operation

Electronic Component Description

Electrical Information Reference

- Circuit Testing
- Connector Repairs
- Testing for Intermittent Conditions and Poor Connections
- Wiring Repairs

DTC Type Reference

Powertrain Diagnostic Trouble Code (DTC) Type Definitions

Scan Tool Reference

Control Module References for scan tool information

Circuit/System Verification

1. Verify that DTC P0563 is not set.
   If DTC is set, refer to DTC B1325, B1330, B1517, C0800, C0899, C0900, C12E1, C12E2, P0562, P0563, P1A0C, P1A0D, or P1EFC .
2. Vehicle ON, observe the scan tool Transmission Fluid Temperature parameter. The reading should be less than 141°C (286°F).
   If greater than the specified range, test for a transmission overheat condition. Refer to Automatic Transmission Overheating .
3. Observe the scan tool TCM temperature parameter. The reading should be less than 141°C (286°F).
   If greater than the specified range, replace the Q8 control solenoid assembly.

Component Testing

Control Solenoid Valve and Transmission Control Module Assembly Inspection

Repair Instructions

Perform the Diagnostic Repair Verification after completing the diagnostic procedure.

Control Module References for Control Solenoid Valve Assembly and Transmission Control Module Assembly replacement, programming, and setup.

&#169© Copyright Chevrolet. All rights reserved

DTC P0667, P0668, or P0669

Diagnostic Instructions

- Perform the Diagnostic System Check - Vehicle prior to using this diagnostic procedure.
- Review Strategy Based Diagnosis for an overview of the diagnostic approach.
- Diagnostic Procedure Instructions provides an overview of each diagnostic category.

DTC Descriptor

DTC P0667: Transmission Control Module (TCM) Temperature Sensor Performance

DTC P0668: Transmission Control Module (TCM) Temperature Sensor Circuit Low Voltage

DTC P0669: Transmission Control Module (TCM) Temperature Sensor Circuit High Voltage

Circuit/System Description

The transmission control module (TCM) temperature sensor is located inside of the transmission control module. The transmission control module is located within the control solenoid valve assembly and is not serviced separately. The TCM temperature sensor provides the transmission control module temperature. This temperature reading is used in various shifting and diagnostic routines in the transmission control module software.

Conditions for Running the DTC

- The system voltage is 11 to 18 V.
- Engine speed is greater than 450 RPM.
- DTC P0722 or P0723 is not set.

P0667

- DTC P0711, P0712, P077B, or P215C is not set.
- DTC P0667 has not passed this key ON.

- The TCM temperature is at least -39°C (-38°F) and no more than +149°C (+300°F).

P0668

DTC P0668 has not failed this ignition cycle.

P0669

- The transmission OSS parameter is greater than 200 RPM for greater than 200 seconds.
- DTC P0669 has not failed this ignition cycle.

Conditions for Setting the DTC

- The difference between the TCM temperature and Trans. Fluid Temp. is greater than 15-50°C (59-122°F), depending on the highest of the Trans. Fluid Temp., TCM temperature and TCM power-up temperatures.
- The difference between the TCM power-up temperature and TCM substrate temperature is greater than 15-50°C (59-122°F), depending on the highest of the Trans. Fluid Temp., TCM temperature and TCM power-up temperatures.
- The above conditions have to be met for 5 minutes.

P0668

The TCM temperature parameter is less than or equal to -60°C (-76°F) for greater than 60 seconds.

P0669

The TCM temperature parameter is greater than or equal to 160°C (320°F) for greater than 60 seconds.

Action Taken When the DTC Sets

DTCs P0667, P0668 and P0669 are Type B DTCs.

Conditions for Clearing the DTC

DTCs P0667, P0668 and P0669 are Type B DTCs.

Diagnostic Aids

This DTC may be set due to an overheating condition. The system is operating normally when the Transmission Fluid Temperature parameter is within 10°C (18°F) of the TCM temperature parameter.

Reference Information

Schematic Reference

Automatic Transmission Controls Schematics

Connector End View Reference

Component Connector End Views

Electrical Information Reference

- Circuit Testing
- Connector Repairs
- Testing for Intermittent Conditions and Poor Connections
- Wiring Repairs

DTC Type Reference

Powertrain Diagnostic Trouble Code (DTC) Type Definitions

Scan Tool Reference

Control Module References for scan tool information

Circuit/System Verification

Verify that DTC P0667, P0668 or P0669 is not set.

If the DTC is set, program the Q8 control solenoid valve assembly. If the DTC resets, replace the Q8 control solenoid valve assembly.

Component Testing

Perform the Control Solenoid Valve and Transmission Control Module Assembly Inspection .

Repair Instructions

Perform the Diagnostic Repair Verification after completing the diagnostic procedure.

Control Module References for Control Solenoid Valve Assembly and Transmission Control Module Assembly replacement, programming, and setup.

&#169© Copyright Chevrolet. All rights reserved

DTC P06AC, P06AD, or P06AE

Diagnostic Instructions

- Perform the Diagnostic System Check - Vehicle prior to using this diagnostic procedure.
- Review Strategy Based Diagnosis for an overview of the diagnostic approach.
- Diagnostic Procedure Instructions provides an overview of each diagnostic category.

DTC Descriptor

DTC P06AC: Control Module Power Up Temperature Sensor Performance

DTC P06AD: Control Module Power Up Temperature Sensor Circuit Low Voltage

DTC P06AE: Control Module Power Up Temperature Sensor Circuit High Voltage

Circuit/System Description

The transmission control module (TCM) power-up temperature sensor is located within the transmission control module. The transmission control module is located within the control solenoid valve assembly and is not serviced separately. The transmission control module power-up temperature sensor provides the transmission control module temperature at power-up. This temperature reading is used in various shifting and diagnostic routines in the transmission control module software.

Conditions for Running the DTC

- The engine is running for greater than or equal to 60 seconds.
- Vehicle speed is less than 201 km/h (124 mph).

P06AC

- DTC P0712, P0713, P0721, P0722, P0723, P0658, P0668, P0669, P06AD, P06AE, or P215C is not set.
- The TCM power-up temperature is at least -39°C (-38°F) and no more than +149°C (+300°F).
- The vehicle is not in Park or Neutral.

- No engine torque or accelerator position sensor faults.

P06AD

- DTC P0721, P0722, P0723 or P215C is not set.
- The transmission output shaft speed is greater than 200 RPM for greater than 200 seconds.
- Estimated drive motor power loss is greater than or equal to 0.4 kW for 200 seconds.

P06AE

DTC P06AE has not failed this ignition cycle.

Conditions for Setting the DTC

P06AC - Condition 1

- Vehicle speed is greater than 8 km/h (5 mph) for 300 seconds cumulative.
- The TCM power-up temperature is at least -40°C (-58°F) and no more than +21°C (+70°F).
- The TCM power-up temperature has changed by less than 2°C (3.6°F) in 100 seconds.
- The transmission fluid temperature is greater than 70°C (158°F).
- The transmission fluid temperature has increased by 55°C (99°F) since startup.

P06AC - Condition 2

- Vehicle speed is greater than 8 km/h (5 mph) for 300 seconds cumulative.
- The TCM temperature sensor is between 120-150°C (248-302°F).
- The TCM power-up temperature has changed by less than 2°C (3.6°F) in 100 seconds.
- The transmission fluid temperature is greater than 70°C (158°F).
- The transmission fluid temperature has increased by 55°C (99°F) since startup.

P06AC - Condition 3

The TCM power-up temperature changes by greater than 20°C (36°F) 14 times over 7 seconds.

P06AD

The TCM power-up temperature is less than or equal to -61°C (-77°F) for greater than 10 seconds.

P06AE

The TCM power-up temperature is greater than or equal to 161°C (321°F) for greater than 10 seconds.

Action Taken When the DTC Sets

DTCs P06AC, P06AD and P06AE are Type B DTCs.

Conditions for Clearing the DTC

DTCs P06AC, P06AD and P06AE are Type B DTCs.

Diagnostic Aids

This DTC may be set due to an overheating condition. The system is operating normally when the Transmission Fluid Temperature parameter is within 10°C (18°F) of the TCM Power Up Temperature parameter.

Reference Information

Schematic Reference

Automatic Transmission Controls Schematics

Connector End View Reference

Component Connector End Views

Description and Operation

Electronic Component Description

Electrical Information Reference

- Circuit Testing
- Connector Repairs
- Testing for Intermittent Conditions and Poor Connections
- Wiring Repairs

DTC Type Reference

Powertrain Diagnostic Trouble Code (DTC) Type Definitions

Scan Tool Reference

Control Module References for scan tool information

Circuit/System Verification

Verify that DTC P06AC, P06AD, or P06AE is not set.

If the DTC is set, program the Q8 control solenoid valve assembly. If the DTC resets, replace the Q8 control solenoid valve assembly.

Component Testing

Perform the Control Solenoid Valve and Transmission Control Module Assembly Inspection .

Repair Instructions

Perform the Diagnostic Repair Verification after completing the diagnostic procedure.

Control Module References for Control Solenoid Valve Assembly and Transmission Control Module Assembly replacement, programming, and setup.

&#169© Copyright Chevrolet. All rights reserved

DTC P0711, P0712, or P0713

Diagnostic Instructions

- Perform the Diagnostic System Check - Vehicle prior to using this diagnostic procedure.
- Review Strategy Based Diagnosis for an overview of the diagnostic approach.
- Diagnostic Procedure Instructions provides an overview of each diagnostic category.

DTC Descriptors

DTC P0711: Transmission Fluid Temperature (TFT) Sensor Performance

DTC P0712: Transmission Fluid Temperature (TFT) Sensor Circuit Low Voltage

DTC P0713: Transmission Fluid Temperature (TFT) Sensor Circuit High Voltage

Diagnostic Fault Information

Circuit	Short to Ground	Open/High Resistance	Short to Voltage	Signal Performance
TFT Sensor Signal	P0712	P0713	P0713	P0711
Low Reference	--	P0713	-	P0711

Typical Scan Tool Data

Transmission Fluid Temperature

Circuit	Short to Ground	Open/High Resistance	Short to Voltage
Operating Conditions: Engine running in Park, normal operating temperature ***Parameter Normal Range:*** -39 to +149°C (-38 to +300°F)			
TFT Signal	Greater than 149°C (300°F)	Less than -39°C (-38°F)	Less than -39°C (-38°F)*

Low Reference	--	Less than -39°C (-38°F)	Less than -39°C (-38°F)*
* Internal TFT sensor damage may result if shorted to B+			

Circuit/System Description

The primary sources of heat in the transmission are the drive motor generators. The drive motor generators are cooled by the transmission fluid. Hot fluid exits the drive motor generators and flows to the transmission cooler supply line. The supply line connects to the transmission cooler, which is internal to the radiator. The transmission fluid cooler pipe assembly is equipped with an internal thermostat that opens at 80°C (176°F) for optimum transmission operation and fuel economy. The transmission cooler pipe thermostat is part of the transmission fluid cooler pipe assembly, located near the transmission and is not serviced separately. From the cooler, the fluid returns through the transmission fluid cooler pipe assembly and enters the lubrication circuits. After lubricating the internal components, the fluid returns to the oil pan. The transmission fluid temperature sensor is part of the control solenoid valve assembly and is not serviced separately.

Conditions for Running the DTC

- No OSS DTCs P0721, P0722, or P0723, P077B, P215C.
- The ignition is greater than 5 seconds.
- The system voltage is 11-18 V.
- The estimated drive motor power loss is greater than 0.4 kw for 200 seconds.

P0711

The TCM temperature parameter is -49 to +169°C (-56 to +336°F).

P0712

DTC P0712 is not failed this ignition cycle.

P0713

DTC P0713 is not failed this ignition cycle.

Conditions for Setting the DTC

P0711

- The difference between the TCM temperature and Trans. Fluid Temp. is greater than 15-50°C (59-122°F), depending on the highest of the Trans. Fluid Temp., TCM temperature and TCM power-up temperatures.
- The difference between the TCM power-up temperature and TCM substrate temperature is greater than 15-50°C (59-122°F), depending on the highest of the Trans. Fluid Temp., TCM temperature and TCM power-up temperatures.

- The above conditions have to be met for 5 minutes.

P0712

The Transmission Fluid Temperature parameter is less than or equal to -60°C (-76°F) for greater than 60 seconds.

P0713

The Transmission Fluid Temperature parameter is greater than or equal to 160°C (320°F) for greater than 60 seconds.

Action Taken When the DTC Sets

- DTC P0711 is a Type B DTC.
- DTCs P0712 and P0713 are Type A DTCs.

Conditions for Clearing the DTC

- DTC P0711 is a Type B DTC.
- DTCs P0712 and P0713 are Type A DTCs.

Diagnostic Aids

The Transmission Fluid Temperature parameter on the scan tool should rise steadily to a normal operating temperature, and then stabilise. Ask about the customer's driving habits, overloading, etc. Ensure the engine and transmission cooling system is functioning normally.

Reference Information

Schematic Reference

Automatic Transmission Controls Schematics

Connector End View Reference

Component Connector End Views

Electrical Information Reference

- Circuit Testing
- Connector Repairs

- Testing for Intermittent Conditions and Poor Connections
- Wiring Repairs

DTC Type Reference

Powertrain Diagnostic Trouble Code (DTC) Type Definitions

Special Tools

GE 24731 Tempil Stick

Circuit/System Verification

Vehicle ON, observe the scan tool Transmission Fluid Temperature and the TCM temperature parameters. The readings should vary less than 30°C (86°F).

If within the specified range, test for a transmission overheat condition. Refer to Automatic Transmission Overheating .
If greater than the specified range, replace the Q8 control solenoid valve assembly.

Component Testing

- Perform the Fluid Leak Diagnosis .
- Perform the Transmission Fluid Level and Condition Check procedure.
- Perform the Line Pressure Check procedure.
- Perform the Main Fluid Pump Pressure High or Low procedure.
- With a hand held infra red thermometer, or *GE 24731* tempil stick test for the transmission cooler supply line thermostat for opening at 80°C (176°F). The transmission cooler supply line temperature should be higher on the transmission side of the thermostat than the cooler side until 80°C (176°F) is reached.
  If the test indicates that the thermostat is stuck open or closed, replace the transmission cooler supply pipe assembly.

Perform the Control Solenoid Valve and Transmission Control Module Assembly Inspection .

Repair Instructions

Perform the Diagnostic Repair Verification after completing the diagnostic procedure.

- Transmission Fluid Cooler Thermal Bypass Valve Replacement
- Control Module References for Control Solenoid Valve Assembly and Transmission Control Module Assembly replacement, programming, and setup.

&#169© Copyright Chevrolet. All rights reserved

DTC P0721

Diagnostic Instructions

- Perform the Diagnostic System Check - Vehicle prior to using this diagnostic procedure.
- Review Strategy Based Diagnosis for an overview of the diagnostic approach.
- Diagnostic Procedure Instructions provides an overview of each diagnostic category.

DTC Descriptors

DTC P0721: Output Speed Sensor Performance

Diagnostic Fault Information

Circuit	Short to Ground	Open/High Resistance	Short to Voltage	Signal Performance
OSS Supply Voltage	P215C	P215C	P215C	P0721, P077B
Low Reference	P215C	P215C	P215C	P0721, P077B

Typical Scan Tool Data

Output Shaft Direction

Circuit	Normal Range	Open/High Resistance	Short to Voltage	Short to Ground
Operating Conditions: Vehicle moving, normal operating temperature				
OSS Signal	Forward/Reverse	Invalid/Unknown	Invalid/Unknown	Invalid/Unknown
OSS Supply Voltage	OK	Out of Range	Out of Range	Out of Range

Circuit/System Description

The A/Trans Output Speed Sensor Assembly has 2 internal hall-effect type sensors, and is capable of sensing both speed and direction. The output speed sensor is internal to the transmission and mounts to the A/Trans case assembly and is connected to the transmission control module (TCM) through the control solenoid valve assembly and

transmission internal harness. The A/Trans Output Speed Sensor Assembly faces the park gear machined teeth surface. The sensor receives 8.3-9.3 volts on the OSS supply voltage circuit from the TCM. As the output shaft rotates, the sensor produces a signal frequency based on the machined surface of the output shaft.

The two sensor elements in the output speed sensor assembly are spaced approximately 1/2 a tooth apart.

- When the vehicle is moving in a forward direction, sensor A detects a particular tooth before sensor B.
- When the vehicle is moving in a reverse direction, sensor B detects a particular tooth before sensor A.

The electronics in the sensor combine the two signals and send a signal with a different pulse width. This signal is interpreted by the transmission control module for speed and direction and is transmitted through the serial data circuits to the engine control module (ECM) and the hybrid powertrain control module. The ECM, hybrid powertrain control module, and transmission control module compare the output speed sensor signal with the antilock brake system (ABS) wheel speed sensor signal. The TCM is part of the control solenoid valve assembly and is not serviced separately. The hybrid powertrain control module is part of the drive motor generator power inverter module and is not serviced separately.

Conditions for Running the DTC

The vehicle is ON.

Conditions for Setting the DTC

The transmission control module detects an invalid Automatic Transmission Output Shaft Speed Sensor direction.

Action Taken When the DTC Sets

The hybrid powertrain control module 1 calculates vehicle direction based on the drive motor direction. The vehicle speed is calculated by the antilock brake system (ABS) wheel speed sensors.

Conditions for Clearing the DTC

DTC P0721 is a Type A DTC.

Reference Information

Schematic Reference

Automatic Transmission Controls Schematics

Connector End View Reference

Component Connector End Views

Electrical Information Reference

- Circuit Testing
- Connector Repairs
- Testing for Intermittent Conditions and Poor Connections
- Wiring Repairs

DTC Type Reference

Powertrain Diagnostic Trouble Code (DTC) Type Definitions

Scan Tool Reference

Control Module References for scan tool information.

Special Tools

EL 38522 Variable Signal Generator

Circuit/System Verification

1. Operate the vehicle at 16-32 km/h (10-20 mph), observe the scan tool Transmission OSS parameter. The reading should be greater than 150 RPM and not drop out.
2. Observe the scan tool OSS Supply Voltage parameter. The reading should display OK.

Circuit/System Testing

Perform the Control Solenoid Valve and Transmission Control Module Assembly Output Shaft Speed Input Test .

Repair Instructions

Perform the Diagnostic Repair Verification after completing the diagnostic procedure.

- Transmission Replacement
- Automatic Transmission Wiring Harness and Output Speed Sensor Removal and Automatic Transmission Wiring Harness and Output Speed Sensor Installation for Automatic Transmission Output Shaft Speed Sensor replacement
- Control Module References for Control Solenoid Valve Assembly and Transmission Control Module Assembly replacement, programming, and setup

&#169© Copyright Chevrolet. All rights reserved

DTC P0751

Diagnostic Instructions

- Perform the Diagnostic System Check - Vehicle prior to using this diagnostic procedure.
- Review Strategy Based Diagnosis for an overview of the diagnostic approach.
- Diagnostic Procedure Instructions provides an overview of each diagnostic category.

DTC Descriptor

DTC P0751: Shift Solenoid (SS) 1 Valve Performance - Stuck Off

Circuit/System Description

The shift solenoid 1 and transmission control module are part of the control solenoid valve assembly and are not serviced separately. The transmission control module supplies 12 V to shift solenoid 1 on the high side driver 1 circuit. The transmission control module controls the normally closed shift solenoid 1 on the shift solenoid 1 control circuit. The shift solenoid 1 controls the transmission fluid to the shift solenoid valve (523).

Conditions for Running the DTC

- Any transmission shift or engine On command.
- Line pressure command is greater than 325 kPa.

Conditions for Setting the DTC

The transmission control module detects shift solenoid valve 1 is OFF when commanded ON.

Action Taken When the DTC Sets

- P0751 is a Type A DTC.
- The driver information centre may display ENGINE NOT AVAILABLE SERVICE SOON.
- The internal combustion engine may not start.

Conditions for Clearing the DTC

P0751 is a Type A DTC.

Reference Information

DTC Type Reference

Powertrain Diagnostic Trouble Code (DTC) Type Definitions

Circuit/System Verification

1. Verify that P0966, P0967, P0969, P0970, P0971, P0973, P0974, P0976, P0977, P2720, P2721, P2728, P2729, or P2730 is not set.
   If any of the DTCs are set, refer to Diagnostic Trouble Code (DTC) List - Vehicle .
2. Vehicle ON, in Park, open the hood. The internal combustion engine should start and transmission fluid pressure switch 1 on the scan tool should change from Low to High.
   If the engine does not start and the transmission fluid pressure switch 1 parameter does change from Low to High, inspect the control valve body shift solenoid valve (523) for a stuck off condition. Refer to Control Valve Body Diagnostic Inspection .
   If the engine starts and the transmission fluid pressure switch 1 parameter does not change from Low to High, inspect the transmission fluid pressure switch 1 for a stuck Low condition. Refer to Control Solenoid Valve and Transmission Control Module Assembly Solenoid Performance Test .
3. Perform the Control Solenoid Valve and Transmission Control Module Assembly Inspection .
4. Perform the Control Solenoid Valve and Transmission Control Module Assembly Solenoid Performance Test .
   If the shift solenoid 1 is found to be leaking or stuck OFF, replace the Q8 control solenoid valve assembly.
   If the control solenoid valve assembly tests normal, inspect the shift solenoid valve (523) and hydraulic circuits for a leak or a stuck valve. Refer to Control Valve Body Diagnostic Inspection .

Repair Instructions

Perform the Diagnostic Repair Verification after completing the diagnostic procedure.

- Control Valve Body Replacement for control valve body replacement.
- Control Valve Body Diagnostic Inspection
- Control Module References for Control Solenoid Valve Assembly and Transmission Control Module Assembly replacement, programming, and setup.

&#169© Copyright Chevrolet. All rights reserved

DTC P0752

Diagnostic Instructions

- Perform the Diagnostic System Check - Vehicle prior to using this diagnostic procedure.
- Review Strategy Based Diagnosis for an overview of the diagnostic approach.
- Diagnostic Procedure Instructions provides an overview of each diagnostic category.

DTC Descriptor

DTC P0752: Shift Solenoid (SS) 1 Valve Performance - Stuck On

Circuit/System Description

The shift solenoid 1 and transmission control module (TCM) are part of the control solenoid valve assembly and are not serviced separately. The transmission control module supplies 12 V to shift solenoid 1 on the high side driver 1 circuit. The transmission control module controls the normally closed shift solenoid 1 on the shift solenoid 1 control circuit. The shift solenoid 1 controls the transmission fluid to the 1-3 clutch regulator valve assembly.

Conditions for Running the DTC

- Any transmission shift without engine or engine transition to Off.
- Line pressure is greater than 325 kPa.

Conditions for Setting the DTC

The transmission control module detects shift solenoid valve 1 is commanded OFF and TCM is unable to confirm transition.

Action Taken When the DTC Sets

P0752 is a Type A DTC.

Conditions for Clearing the DIC/DTC

P0752 is a Type A DTC.

Reference Information

DTC Type Reference

Powertrain Diagnostic Trouble Code (DTC) Type Definitions

Circuit/System Verification

1. Verify that P0966, P0967, P0969, P0970, P0971, P0973, P0974, P0976, P0977, P2720, P2721, P2728, P2729, or P2730 is not set.
   If any of the DTCs are set, refer to Diagnostic Trouble Code (DTC) List - Vehicle .
2. Perform the Transmission Fluid Level and Condition Check .
3. Perform the Line Pressure Check .
4. Perform the Control Solenoid Valve and Transmission Control Module Assembly Inspection .
5. Perform the Control Solenoid Valve and Transmission Control Module Assembly Solenoid Performance Test .
   If the shift solenoid 1 is found to be leaking or stuck OFF, replace the Q8 control solenoid valve assembly.
   If the Q8 control solenoid valve assembly tests normal, inspect the valve body and hydraulic circuits for a leak or a stuck valve. Refer to Control Valve Body Diagnostic Inspection .

Repair Instructions

Perform the Diagnostic Repair Verification after completing the diagnostic procedure.

- Control Valve Body Replacement for control valve body replacement.
- Control Module References for Control Solenoid Valve Assembly and Transmission Control Module Assembly replacement, programming, and setup.

&#169© Copyright Chevrolet. All rights reserved

DTC P0756

Diagnostic Instructions

- Perform the Diagnostic System Check - Vehicle prior to using this diagnostic procedure.
- Review Strategy Based Diagnosis for an overview of the diagnostic approach.
- Diagnostic Procedure Instructions provides an overview of each diagnostic category.

DTC Descriptor

DTC P0756: Shift Solenoid (SS) 2 Valve Performance - Stuck Off

Circuit/System Description

The shift solenoid valve 2 is part of the control solenoid valve assembly and is not serviced separately. The shift solenoid valve 2 is a normally closed solenoid valve and controls fluid to the hybrid low, 1-2 clutch boost valve assembly and related clutches. During this diagnostic test, intrusive actions are taken by the transmission control module to test the shift solenoid valve 2 to see if the valve is stuck OFF when in dual motor or dual motor and ICE modes.

Conditions for Running the DTC

- Shifting to dual motor or dual motor and ICE.
- Line pressure is greater than 325 kPa.

Conditions for Setting the DTC

The transmission control module detects shift solenoid valve 2 is OFF when commanded ON.

Action Taken When the DTC Sets

P0756 is a Type A DTC.

Conditions for Clearing the DTC

P0756 is a Type A DTC.

Reference Information

DTC Type Reference

Powertrain Diagnostic Trouble Code (DTC) Type Definitions

Circuit/System Verification

1. Verify that P0966, P0967, P0969, P0970, P0971, P0973, P0974, P0976, P0977, P2720, P2721, P2728, P2729, or P2730 is not set.
   If any of the DTCs are set, refer to Diagnostic Trouble Code (DTC) List - Vehicle .
2. Perform the Transmission Fluid Level and Condition Check .
3. Perform the Line Pressure Check .
4. Perform the Control Solenoid Valve and Transmission Control Module Assembly Inspection .
5. Perform the Control Solenoid Valve and Transmission Control Module Assembly Solenoid Performance Test .
   If the shift solenoid 2 is found to be leaking or stuck OFF, replace the Q8 control solenoid valve assembly.
   If the Q8 control solenoid valve assembly tests normal, inspect the valve body and hydraulic circuits for a leak or a stuck valve. Refer to Control Valve Body Diagnostic Inspection .

Repair Instructions

Perform the Diagnostic Repair Verification after completing the diagnostic procedure.

- Control Valve Body Replacement for control valve body replacement.
- Control Module References for Control Solenoid Valve Assembly and Transmission Control Module Assembly replacement, programming, and setup.

&#169© Copyright Chevrolet. All rights reserved

DTC P0757

Diagnostic Instructions

- Perform the Diagnostic System Check - Vehicle prior to using this diagnostic procedure.
- Review Strategy Based Diagnosis for an overview of the diagnostic approach.
- Diagnostic Procedure Instructions provides an overview of each diagnostic category.

DTC Descriptor

DTC P0757: Shift Solenoid (SS) 2 Valve Performance - Stuck On

Circuit/System Description

The shift solenoid valve 2 and transmission control module are part of the control solenoid valve assembly and are not serviced separately. The shift solenoid valve 2 is a normally closed solenoid valve and controls fluid to the hybrid low, 1-2 clutch boost valve assembly and related clutches. During this diagnostic test, intrusive actions are taken by the transmission control module to test the shift solenoid valve 2 to see if the valve is stuck ON when in dual motor or dual motor and ICE modes. If the correct gear ratio is not achieved in a predetermined period of time, the transmission control module commands second gear and if second gear ratio is attained this indicates a stuck ON shift solenoid valve 2 and the DTC will set.

Conditions for Running the DTC

- Shift from two motor to any other state.
- Line pressure is greater than 325 kPa.

Conditions for Setting the DTC

Transmission pressure switch 1 is high when shift solenoid valve 2 is commanded Off.

Action Taken When the DTC Sets

P0757 is a Type A DTC.

Conditions for Clearing the DTC

P0757 is a Type A DTC.

Reference Information

DTC Type Reference

Powertrain Diagnostic Trouble Code (DTC) Type Definitions

Circuit/System Verification

1. Verify that P0966, P0967, P0969, P0970, P0971, P0973, P0974, P0976, P0977, P2720, P2721, P2728, P2729, or P2730 is not set.
   If any of the DTCs are set, refer to Diagnostic Trouble Code (DTC) List - Vehicle .
2. Perform the Transmission Fluid Level and Condition Check .
3. Perform the Line Pressure Check .
4. Perform the Control Solenoid Valve and Transmission Control Module Assembly Inspection .
5. Perform the Control Solenoid Valve and Transmission Control Module Assembly Solenoid Performance Test .
   If the shift solenoid 2 is found to be leaking or stuck ON, replace the Q8 control solenoid valve assembly.
   If the Q8 control solenoid valve assembly tests normal, inspect the valve body and hydraulic circuits for a leak or a stuck valve. Refer to Control Valve Body Diagnostic Inspection
6. Operate the vehicle within the Conditions for Running the DTC to verify the DTC does not reset. You may also operate the vehicle within the conditions that you observed from the Freeze Frame/Failure Records data.

Repair Instructions

Perform the Diagnostic Repair Verification after completing the diagnostic procedure.

- Control Valve Body Replacement for control valve body replacement.
- Control Module References for Control Solenoid Valve Assembly and Transmission Control Module Assembly replacement, programming, and setup.

&#169© Copyright Chevrolet. All rights reserved

DTC P0776 or P0777

Diagnostic Instructions

- Perform the Diagnostic System Check - Vehicle prior to using this diagnostic procedure.
- Review Strategy Based Diagnosis for an overview of the diagnostic approach.
- Diagnostic Procedure Instructions provides an overview of each diagnostic category.

DTC Descriptors

DTC P0776: Pressure Control Solenoid 2 - Stuck OFF

DTC P0777: Pressure Control Solenoid 2 - Stuck ON

Circuit/System Description

The clutch pressure control solenoid 2 is part of the control solenoid valve assembly and is not serviced separately. The clutch pressure control solenoid 2 controls transmission fluid pressure to the variable hi and 2-3-4 clutch regulator valve. The transmission control module monitors the transmission fluid pressure switch 3 state, in order to determine function of the clutch pressure control solenoid 2 and the variable hi and 2-3-4 clutch regulator valve. When the clutch pressure control solenoid 2 is commanded ON, the transmission fluid pressure switch 3 state should be High. When the clutch pressure control solenoid 2 is commanded Off, the transmission fluid pressure switch 3 parameter state should be Low.

Conditions for Running the DTC

P0776 or P0777

- Shift solenoid valve 1 is not in a transition state.
- The transmission line pressure is greater than 325 kPa (47 psi).

P0776

The clutch pressure control solenoid 2 commanded pressure is greater than 1800 kPa (261 psi) for up to 5 seconds depending on transmission temperature.

P0777

The clutch pressure control solenoid 2 commanded pressure is less than 5 kPa (1 psi) for up to 5 seconds depending on transmission temperature.

Conditions for Setting the DTC

P0776 - Condition 1

The clutch pressure control solenoid 2 commanded pressure is 1800 kPa (261 psi) and the transmission fluid pressure switch 3 state is Low for 30 seconds.

P0776 - Condition 2

The clutch pressure control solenoid 2 commanded pressure is 1800 kPa (261 psi) and the transmission fluid pressure switch 3 state is Low for 2 seconds greater than 5 times during a key cycle.

P0777 - Condition 1

The clutch pressure control solenoid 2 commanded pressure is 5 kPa (1 psi) and the transmission fluid pressure switch 3 state is High for 36 seconds.

P0777 - Condition 2

The clutch pressure control solenoid 2 commanded pressure is 5 kPa (1 psi) and the transmission fluid pressure switch 3 state is High for 2 seconds greater than 5 times during a key cycle.

Action Taken When the DTC Sets

- DTC P0776 is a type B and DTC P0777 is a Type A DTC.
- The transmission control module commands maximum line pressure.
- The transmission control module freezes transmission adaptive functions.

Conditions for Clearing the DTC

DTC P0776 is a type B and DTC P0777 is a Type A DTC.

Diagnostic Aids

When attempting to set transmission performance DTCs, observe the Freeze Frame and Failure Records to assist in duplicating the failure conditions. With a scan tool, monitor the pressure control solenoid valve 2 pressure command and the transmission fluid pressure switch 3 state parameters. Drive the vehicle to obtain two motor EV. The most likely cause of this DTC is an intermittent transmission pressure switch 3 -- verify transmission fluid pressure -- fault. Perform this operation 2 times. When the pressure

control solenoid valve 2 pressure command is Yes, the transmission fluid pressure switch 3 state should be high. When the pressure control solenoid valve 2 pressure command is No, the transmission fluid pressure switch 3 state should be Low. The most likely cause of this DTC is an intermittent transmission pressure switch problem.

Reference Information

Schematic Reference

Automatic Transmission Controls Schematics

Connector End View Reference

Component Connector End Views

Electrical Information Reference

- Circuit Testing
- Connector Repairs
- Testing for Intermittent Conditions and Poor Connections
- Wiring Repairs

DTC Type Reference

Powertrain Diagnostic Trouble Code (DTC) Type Definitions

Special Tools

DT-47825 Control Solenoid Test Plate

Circuit/System Verification

1. Verify that DTCs P0966, P0967, P0969, P0970, P0971, P0973, P0974, P0976, P0977, P2720, P2721, P2728, P2729, or P2730 are not set.
   If any of the DTCs are set, refer to Diagnostic Trouble Code (DTC) List - Vehicle .
2. Perform the Transmission Fluid Level and Condition Check .
3. Perform the Line Pressure Check .
   If the pressure is out of specification, correct this first.
4. Perform the Control Solenoid Valve and Transmission Control Module Assembly Inspection .
   If cause for concern is found, repair or replace the Q8 control solenoid valve assembly.
5. Perform the Control Solenoid Valve and Transmission Control Module Assembly Solenoid Performance Test .
   If the solenoid is found to be leaking or stuck closed, replace the Q8 control solenoid valve assembly.

6. Inspect the control valve body assembly for sticking valves, damage, scored bores, or debris. Refer to Control Valve Body Diagnostic Inspection .
   If there is cause for concern in the valve body, repair or replace the valve body as necessary.
7. Inspect for P079B or P07A5 after repair.

Repair Instructions

Perform the Diagnostic Repair Verification after completing the diagnostic procedure.

- Control Solenoid Valve and Transmission Control Module Assembly Removal for Control Valve Assembly removal.
- Control Valve Body Assembly Disassemble for Control Valve Assembly inspection and overhaul.
- Variable High and 2-3-4 Clutch Hub and Clutch Removal and Variable High and 2-3-4 Clutch and Hub Installation for Variable Hi and 2-3-4 Clutch Assembly replacement.
- Control Module References for Control Solenoid Valve Assembly and Transmission Control Module Assembly replacement, programming, and setup.

&#169© Copyright Chevrolet. All rights reserved

DTC P077B

Diagnostic Instructions

- Perform the Diagnostic System Check - Vehicle prior to using this diagnostic procedure.
- Review Strategy Based Diagnosis for an overview of the diagnostic approach.
- Diagnostic Procedure Instructions provides an overview of each diagnostic category.

DTC Descriptor

DTC P077B: Output Speed Sensor Direction Incorrect

Diagnostic Fault Information

Circuit	Short to Ground	Open/High Resistance	Short to Voltage	Signal Performance
OSS Supply Voltage	P215B	P0721, P215B	P0721, P215B	P077B, P0721, P215C
OSS Signal	P215B	P0721, P215B	P0721, P215B	P077B, P0721, P215C

Typical Scan Tool Data

Output Shaft Direction

Circuit	Normal Range	Open/High Resistance	Short to Voltage
Operating Conditions: Engine running, normal operating temperature			
OSS Signal	Forward/Reverse	Out of Range	Out of Range
OSS Supply Voltage	OK	Out of Range	Out of Range

Circuit/System Description

The transmission output shaft speed sensor has 2 internal hall-effect type sensors, and is capable of sensing both speed and direction. The transmission output shaft speed sensor mounts to the A/Trans case assembly and is connected to the control solenoid valve assembly through a wire harness and connector. The sensor faces the front

differential drive pinion, w/transfer gear, gear assembly machined teeth surface. The sensor receives 8.3-9.3 volts on the OSS supply voltage circuit from the transmission control module (TCM). As the output shaft rotates, the sensor produces a signal frequency based on the machined surface of the output shaft.

The two sensor elements in the transmission output shaft speed sensor are spaced approximately 1/2 a tooth apart.

- When the vehicle is moving in a forward direction, sensor A detects a particular tooth before sensor B.
- When the vehicle is moving in a reverse direction, sensor B detects a particular tooth before sensor A.

The electronics in the sensor combine the two signals and send a signal with a different pulse width. This signal is interpreted by the TCM for speed and direction and is transmitted through the GMLAN circuits to the engine control module (ECM) and the hybrid powertrain control module. The ECM, hybrid powertrain control module, and TCM compare the OSS signal with hybrid motor speed/direction and the ABS wheel speed sensor signal.

Conditions for Running the DTC

- The OSS speed parameter is less than 50 RPM.
- The drive motor estimated output speed is greater than 50 RPM.

Conditions for Setting the DTC

The hybrid powertrain control module or the transmission control module detects an incorrect OSS direction.

Action Taken When the DTC Sets

Hybrid Powertrain Control Module

The hybrid powertrain control module calculates OSS direction based on drive motor 1 and drive motor 2 direction.

Transmission Control Module

The hybrid powertrain control module 1 and ECM use the ABS wheel speed to calculate vehicle speed.

Conditions for Clearing the DTC

Hybrid Powertrain Control Module

P077B is a Type A DTC.

Transmission Control Module

P077B is a Type A DTC.

Diagnostic Aids

Inspect the output speed sensor, harness, connector and control solenoid valve assembly pins for metallic debris and output shaft machined face for damage or misalignment. Proper torque of the output speed sensor mounting bolt is critical to proper output speed sensor operation. Use a terminal test kit for any test that requires probing the control solenoid valve assembly harness connector or a component harness connector.

Reference Information

Schematic Reference

Automatic Transmission Controls Schematics

Connector End View Reference

Component Connector End Views

Description and Operation

Electronic Component Description

Electrical Information Reference

- Circuit Testing
- Connector Repairs
- Testing for Intermittent Conditions and Poor Connections
- Wiring Repairs

DTC Type Reference

Powertrain Diagnostic Trouble Code (DTC) Type Definitions

Scan Tool Reference

Control Module References for scan tool information.

Special Tools

EL 38522 Variable Signal Generator

Circuit/System Verification

1. Verify that DTCs P0721, P0966, P0967, P0969, P0970, P0971, P0973, P0974, P0976, P0977, P2720, P2721, P2728, P2729, or P2730 are not set.
   If any of the DTCs are set, refer to Diagnostic Trouble Code (DTC) List - Vehicle .
2. Operate the vehicle at 16-32 km/h (10-20 mph) while observing the Transmission Data OSS Direction parameter on the scan tool. The OSS Direction parameter should match vehicle direction.
   If the OSS parameter corresponds with the vehicle direction and the DTC is set in the hybrid powertrain control module and not the transmission control module, replace the T6 power inverter module.

Circuit/System Testing

Perform the Control Solenoid Valve and Transmission Control Module Assembly Output Shaft Speed Input Test .

Component Testing

Control Solenoid Valve and Transmission Control Module Assembly Output Shaft Speed Input Test

Repair Instructions

Perform the Diagnostic Repair Verification after completing the diagnostic procedure.

Control Module References for Drive Motor Generator Power Inverter Module, also called the power inverter module, and Control Solenoid Valve Assembly and Transmission Control Module Assembly replacement, programming, and setup.

&#169© Copyright Chevrolet. All rights reserved

DTC P0796 or P0797

Diagnostic Instructions

- Perform the Diagnostic System Check - Vehicle prior to using this diagnostic procedure.
- Review Strategy Based Diagnosis for an overview of the diagnostic approach.
- Diagnostic Procedure Instructions provides an overview of each diagnostic category.

DTC Descriptors

DTC P0796: Pressure Control Solenoid 3 - Stuck Off

DTC P0797: Pressure Control Solenoid 3 - Stuck On

Circuit/System Description

The clutch pressure control solenoid 3 is part of the control solenoid valve assembly and is not serviced separately. The transmission control module (TCM) supplies 12 volts to the clutch pressure control solenoid 3 on the high side driver 1 circuit. The TCM controls the pressure control solenoid 3 through the clutch pressure control solenoid 3 control circuit. The normally high clutch pressure control solenoid 3 controls fluid to the following components:

- Variable low 1-2 reverse clutch
- Drive motor 2 cooling

Conditions for Running the DTC

P0796 or P0797

- Shift solenoid valve 1 is not in a transition state.
- The transmission line pressure is greater than 325 kPa (47 psi).

P0796

The clutch pressure control solenoid 3 commanded pressure is greater than 1800 kPa (261 psi) for up to 5 seconds depending on transmission temperature.

P0797

The clutch pressure control solenoid 3 commanded pressure is less than 5 kPa (1 psi) for up to 5 seconds depending on transmission temperature.

Conditions for Setting the DTC

P0796 - Condition 1

The clutch pressure control solenoid 3 commanded pressure is 1800 kPa (261 psi) and the transmission fluid pressure switch state is Low for 30 seconds.

P0796 - Condition 2

The clutch pressure control solenoid 3 commanded pressure is 1800 kPa (261 psi) and the transmission fluid pressure switch 5 state is Low for seconds greater than 5 times during a key cycle.

P0797 - Condition 1

The clutch pressure control solenoid 3 commanded pressure is 5 kPa (1 psi) and the transmission fluid pressure switch 5 state is High for 30 seconds.

P0797 - Condition 2

The clutch pressure control solenoid 3 commanded pressure is 5 kPa (1 psi) and the transmission fluid pressure switch 5 state is High for 2 seconds greater than 5 times during a key cycle.

Action Taken When the DTC Sets

- DTC P0796 is a Type B and DTC P0797 is a Type A DTC.
- The TCM commands 450 kPa (65 psi) line pressure.
- The TCM freezes transmission adaptive functions.

Conditions for Clearing the DTC

DTC P0796 is a Type B and DTC P0797 is a Type A DTC.

Diagnostic Aids

When attempting to set transmission performance DTCs, observe the Freeze Frame and Failure Records to assist in duplicating the failure conditions.

Reference Information

Schematic Reference

Automatic Transmission Controls Schematics

Connector End View Reference

Component Connector End Views

Electrical Information Reference

- Circuit Testing
- Connector Repairs
- Testing for Intermittent Conditions and Poor Connections
- Wiring Repairs

DTC Type Reference

Powertrain Diagnostic Trouble Code (DTC) Type Definitions

Scan Tool Reference

Control Module References for scan tool information.

Special Tools

DT-47825 Control Solenoid Test Plate Kit

Circuit/System Verification

1. Verify that DTCs P0966, P0967, P0969, P0970, P0971, P0973, P0974, P0976, P0977, P2720, P2721, P2728, P2729, or P2730 are not set.
   If any of the DTCs are set, refer to Diagnostic Trouble Code (DTC) List - Vehicle .
2. Perform the Line Pressure Check .
3. Perform the Control Solenoid Valve and Transmission Control Module Assembly Inspection .
4. Perform the Control Solenoid Valve and Transmission Control Module Assembly Solenoid Performance Test .
5. Inspect the control valve body assembly for sticking valves, damage, scored bores, or debris. Refer to Control Valve Body Diagnostic Inspection .
   If there is cause for concern in the valve body, repair or replace the valve body as necessary.

6. Verify no DTCs P079A or P07A3 after repair.

Component Testing

1. Perform the Control Solenoid Valve and Transmission Control Module Assembly Inspection .
2. Perform the Control Solenoid Valve and Transmission Control Module Assembly Solenoid Performance Test .

Repair Instructions

Perform the Diagnostic Repair Verification after completing the diagnostic procedure.

- Control Valve Body Diagnostic Inspection .
- Control Valve Body Replacement for control valve body replacement.
- Control Module References for Control Solenoid Valve Assembly and Transmission Control Module Assembly replacement, programming, and setup.

&#169© Copyright Chevrolet. All rights reserved

DTC P079A

Diagnostic Instructions

- Perform the Diagnostic System Check - Vehicle prior to using this diagnostic procedure.
- Review Strategy Based Diagnosis for an overview of the diagnostic approach.
- Diagnostic Procedure Instructions provides an overview of each diagnostic category.

DTC Descriptor

DTC P079A: Transmission Clutch 1 Slip Detected

Typical Scan Tool Data

Variable Low and 1-2 Reverse Clutch Reference

Parameter	Commanded ON	Commanded OFF	Slipping when Commanded ON
Operating Conditions: Vehicle speed 0-161 km/h (0-100 mph) ***Parameter Normal Range:*** 0-6,000 RPM			
Clutch 1 Slip Speed	0 RPM	0-6,000 RPM	0-6,000 RPM
Clutch 1 Status	Applied	Released	Applied

Circuit/System Description

The transmission control module (TCM) monitors the Clutch 1 Slip Speed for each Hybrid Transmission Mode Commanded state. The transmission control module monitors clutch slip when the variable Low and 1-2 reverse clutch is applied. The transmission control module is part of the control solenoid valve assembly and is not serviced separately.

Conditions for Running the DTC

- The clutch pressure control solenoid valve 3 commanded pressure is 1800 kPa (261 psi) for 3 seconds.

- The variable low and 1-2 reverse clutch torque estimated is greater than 200 N·m (148 lb ft).
- The variable low and 1-2 reverse clutch fill detected.
- The commanded mode is:
  - Reverse
  - Dual Electric Motors
  - Dual Electric Motors and ICE

Conditions for Setting the DTC

- The transmission control module detects Hybrid low, 1-2 clutch slip greater than 200 RPM for 3 seconds.
- C1 slip greater than 200 RPM for greater than 1 second 3 times during one key cycle. Retries are 30 seconds apart.
- Motor 1 or 2 are approaching over-speed limits due to clutch slip, the fault will set instantly.

Action Taken When the DTC Sets

- P079A is a Type A DTC.
- The transmission control module inhibits:
  - Dual Electric Motors
  - Dual Electric Motors and ICE

Conditions for Clearing the DTC

P079A is a Type A DTC.

Diagnostic Aids

When attempting to set transmission performance DTCs, observe the Freeze Frame and Failure Records to assist in duplicating the failure conditions. Ensure the transmission fluid level is correct and there are no leaks. If there are any other transmission DTCs set, diagnose those first.

Reference Information

Description and Operation

- Transmission General Description
- Transmission Component and System Description
- Electronic Component Description

DTC Type Reference

Powertrain Diagnostic Trouble Code (DTC) Type Definitions

Circuit/System Verification

1. Verify that DTCs P0721, P0796, P0966, P0967, P0969, P0970, P0971, P0973, P0974, P0976, P0977, P215C, P2720, P2721, P2728, P2729, or P2730 is not set.
   If any of the DTCs are set, refer to Diagnostic Trouble Code (DTC) List - Vehicle .
2. Perform the Transmission Fluid Level and Condition Check to verify correct fluid level and condition.
3. Perform the Line Pressure Check to verify correct oil pressure.
4. Operate the vehicle in Duel Electric Motors and Duel Electric Motors and ICE mode. The Clutch 1 Slip Speed parameter reading should be less than 200 RPM when the Clutch 1 Status parameter reading is Applied.

Component Testing

1. Perform the Control Solenoid Valve and Transmission Control Module Assembly Inspection to verify control solenoid valve assembly condition.
2. Perform the Control Solenoid Valve and Transmission Control Module Assembly Solenoid Performance Test to verify control solenoid valve assembly function.
   If a malfunction is found, replace the Q8 control solenoid valve assembly.
3. Inspect the a/trans fluid level control valve for stuck closed or damaged condition.
   If you found cause for concern in the a/trans fluid level control valve, replace the a/trans fluid level control valve.
4. Inspect the valve body components and hydraulic circuits listed below for a leak or a stuck valve:
   - Control valve body spacer (w/gasket) plate assembly
   - 1-3 reverse clutch and drive motor/generator stator cooling regulator valve

   If you found cause for concern in the valve body, repair or replace the valve or valve body.
5. Inspect the 1-3 reverse clutch assembly snap ring, piston, clutch discs, and housing for a slipping or damaged condition.
   If you found cause for concern in the 1-3 reverse clutch assembly, repair or replace the 1-3 reverse assembly as necessary.

Repair Instructions

Perform the Diagnostic Repair Verification after completing the diagnostic procedure.

- Control Valve Body Assembly Disassemble for Valve Body inspection procedures.
- Control Valve Body Replacement for control valve body replacement.
- Variable Low and 1-2 Reverse Clutch Piston Removal and Variable Low and 1-2 Reverse Clutch Piston Installation for 1-3-Reverse Clutch Assembly replacement.
- Control Module References for Control Solenoid Valve Assembly and Transmission Control Module Assembly replacement, programming, and setup.

&#169© Copyright Chevrolet. All rights reserved

DTC P079B

Diagnostic Instructions

- Perform the Diagnostic System Check - Vehicle prior to using this diagnostic procedure.
- Review Strategy Based Diagnosis for an overview of the diagnostic approach.
- Diagnostic Procedure Instructions provides an overview of each diagnostic category.

DTC Descriptor

DTC P079B: Transmission Clutch 2 Slip Detected

Typical Scan Tool Data

Variable Hi and 2-3-4 Clutch Reference

Parameter	Commanded ON	Commanded OFF	Slipping when Commanded ON
Operating Conditions: Vehicle speed 0-80 km/h (0-50 mph) ***Parameter Normal Range:*** 0-6,000 RPM			
Clutch 2 Slip Speed	0 RPM	0-6,000 RPM	0-6,000 RPM
Clutch 2 Status	Applied	Released	Applied

Circuit/System Description

The transmission control module (TCM) monitors Clutch 2 Slip Speed for each Hybrid Transmission Mode Commanded state. The transmission control module monitors clutch slip when the variable high, 2-3-4 clutch is commanded ON.

Conditions for Running the DTC

- Variable hi and 2-3-4 clutch is applied.
- The clutch pressure control solenoid valve 2 commanded pressure is 1800 kPa (261 psi) for 3 seconds.

Conditions for Setting the DTC

- The TCM detects the variable hi and 2-3-4 clutch slip is greater than 200 RPM for greater than 1 second 3 times within the same key cycle. The TCM retries at 30 seconds apart.
- Motor 1 or 2 are approaching over-speed limits due to clutch slip, the fault will set instantly.

Action Taken When the DTC Sets

- P079B is a Type A DTC.
- The TCM inhibits Single Electric Motor and Duel Electric Motors and ICE mode.

Conditions for Clearing the DTC

P079B is a Type A DTC.

Diagnostic Aids

When attempting to set transmission performance DTCs, observe the Freeze Frame and Failure Records to assist in duplicating the failure conditions. Ensure the transmission fluid level is correct and there are no leaks. If there are any other transmission DTCs set, diagnose those first.

Reference Information

Schematic Reference

Automatic Transmission Controls Schematics

Connector End View Reference

Component Connector End Views

Description and Operation

- Transmission General Description
- Electronic Component Description

Electrical Information Reference

- Circuit Testing

- Connector Repairs
- Testing for Intermittent Conditions and Poor Connections
- Wiring Repairs

DTC Type Reference

Powertrain Diagnostic Trouble Code (DTC) Type Definitions

Scan Tool Reference

Control Module References for scan tool information

Circuit/System Verification

1. Verify that DTCs P0721, P0723, P0776, P0777, P0966, P0967, P0969, P0970, P0971, P0973, P0974, P0976, P0977, P215C, P2720, P2721, P2728, P2729, or P2730 is not set.
   If any of the DTCs are set, refer to Diagnostic Trouble Code (DTC) List - Vehicle .
2. Perform the Transmission Fluid Level and Condition Check to verify correct fluid level and condition.
3. Perform the Line Pressure Check to verify correct oil pressure.
4. Operate the vehicle in Dual Motors mode. The Clutch 2 Slip Speed parameter reading should be less than 200 RPM when the Clutch 2 Status parameter reading is Applied.

Component Testing

1. Perform the Control Solenoid Valve and Transmission Control Module Assembly Inspection to verify Q8 control solenoid valve assembly condition.
2. Perform the Control Solenoid Valve and Transmission Control Module Assembly Solenoid Performance Test to verify Q8 control solenoid valve assembly function.
   If a malfunction is found, replace the Q8 control solenoid valve assembly.
3. Inspect the a/trans fluid level control valve for stuck closed or damaged condition.
   If you found cause for concern in the a/trans fluid level control valve, replace the a/trans fluid level control valve.
4. Inspect the variable hi and 2-3-4 clutch and drive motor/generator stator cooling regulator boost valve for sticking or damage.
   If you found cause for concern in the variable hi and 2-3-4 clutch and drive motor/generator stator cooling regulator boost valve, repair or replace the valve or valve body.
5. Inspect the variable hi and 2-3-4 clutch assembly piston, snap ring, and clutch discs for a damaged condition.
   If you found the variable hi, 2-3-4 clutch to be damaged, repair or replace the variable high, 2-3-4 clutch as necessary.

Repair Instructions

Perform the Diagnostic Repair Verification after completing the diagnostic procedure.

- Variable High and 2-3-4 Clutch Hub and Clutch Removal and Variable High and 2-3-4 Clutch and Hub Installation for variable High, 2-3-4 Clutch replacement
- Control Valve Body Replacement for control valve body replacement.
- Control Valve Body Diagnostic Inspection
- Transmission Replacement for Transmission removal
- Control Module References for Control Solenoid Valve Assembly and Transmission Control Module Assembly replacement, programming, and setup.

&#169© Copyright Chevrolet. All rights reserved

DTC P079C

Diagnostic Instructions

- Perform the Diagnostic System Check - Vehicle prior to using this diagnostic procedure.
- Review Strategy Based Diagnosis for an overview of the diagnostic approach.
- Diagnostic Procedure Instructions provides an overview of each diagnostic category.

DTC Descriptor

DTC P079C: Transmission Clutch 3 Slip Detected

Typical Scan Tool Data

1-3 Reverse Clutch Reference

Parameter	Commanded ON	Commanded OFF	Slipping when Commanded ON
Operating Conditions: Vehicle speed 0-161 km/h (0-100 mph) ***Parameter Normal Range:*** 0-6,000 RPM			
Clutch 3 Slip Speed	0 RPM	0-6,300 RPM	0-6,300 RPM
Clutch 3 Status	Applied	Released	Applied

Circuit/System Description

The transmission control module (TCM) monitors the Clutch Slip 3 Speed for each Hybrid Transmission Mode Commanded state. The TCM is part of the control solenoid valve assembly and is not serviced separately.

Conditions for Running the DTC

- The clutch pressure control solenoid 3 commanded pressure is 1800 kPa (261 psi) for 1 second.
- Clutch fill is detected.

- Clutch torque commanded is greater than 50 N·m (37 lb ft).

Conditions for Setting the DTC

- The TCM detects the clutch 3 Slip Speed is greater than 300 RPM for greater than 1 second. The TCM retries 3 times at 30 second intervals.
- Motor 1 or 2 are approaching over-speed limits due to clutch slip, the fault will set instantly.

Action Taken When the DTC Sets

P079C is a Type A DTC.

Conditions for Clearing the DTC

P079C is a Type A DTC.

Diagnostic Aids

When attempting to set transmission performance DTCs, observe the Freeze Frame and Failure Records to assist in duplicating the failure conditions. Ensure the transmission fluid level is correct and there are no leaks. If there are any other transmission DTCs set, diagnose those first.

Reference Information

Schematic Reference

Automatic Transmission Controls Schematics

Connector End View Reference

Component Connector End Views

Electrical Information Reference

- Circuit Testing
- Connector Repairs
- Testing for Intermittent Conditions and Poor Connections
- Wiring Repairs

DTC Type Reference

Powertrain Diagnostic Trouble Code (DTC) Type Definitions

Scan Tool Reference

Control Module References for scan tool information

Circuit/System Verification

1. Verify that DTC P0721, P0966, P0967, P0969, P0970, P0971, P0973, P0974, P0976, P0977, P215C, P2714, P2715, P2720, P2721, P2728, P2729, or P2730 is not set.
   If any of the DTCs are set, refer to Diagnostic Trouble Code (DTC) List - Vehicle .
2. Perform the Transmission Fluid Level and Condition Check to verify correct fluid level and condition.
3. Perform the Line Pressure Check to verify correct oil pressure.
4. Operate the vehicle in LS-ICE mode. The Clutch 3 Slip Speed parameter should be less than 100 RPM when the Clutch 3 Status parameter displays Applied.

Component Testing

1. Perform the Control Solenoid Valve and Transmission Control Module Assembly Inspection to verify control solenoid valve assembly condition.
2. Perform the Control Solenoid Valve and Transmission Control Module Assembly Solenoid Performance Test to verify control solenoid valve assembly function.
   If a malfunction is found, replace the Q8 control solenoid valve assembly.
3. Inspect the a/trans fluid level control valve for stuck closed or damaged condition.
   If you found cause for concern in the a/trans fluid level control valve, replace the a/trans fluid level control valve.
4. Inspect the valve body components and hydraulic circuits listed below for a leak or a stuck valve:
   - Control valve body spacer (w/gasket) plate assembly
   - 1-3 reverse and drive motor/generator stator cooling regulator valve
   - 1-3 reverse and drive motor/generator stator cooling regulator feedback valve

   If you found cause for concern in the valve body, repair or replace the valve or valve body.
5. Inspect the 1-3 reverse clutch assembly, piston, snap ring, discs, and housing for a damaged condition.
   If you found the 1-3 reverse clutch assembly to be damaged, repair or replace the 1-3 reverse clutch assembly as necessary.

Repair Instructions

Perform the Diagnostic Repair Verification after completing the diagnostic procedure.

- Control Valve Body Replacement for control valve body replacement.
- 1-3-Reverse Clutch, Input Clutch Hub, and Hub Shaft Removal
- Transmission Replacement for Transmission removal
- Control Module References for Control Solenoid Valve Assembly and Transmission Control Module Assembly replacement, programming, and setup.

&#169© Copyright Chevrolet. All rights reserved

DTC P07A3

Diagnostic Instructions

- Perform the Diagnostic System Check - Vehicle prior to using this diagnostic procedure.
- Review Strategy Based Diagnosis for an overview of the diagnostic approach.
- Diagnostic Procedure Instructions provides an overview of each diagnostic category.

DTC Descriptor

DTC P07A3: Transmission Clutch 1 Stuck On

Typical Scan Tool Data

Variable Low and 1-2 Reverse Clutch Reference

Parameter	Commanded ON	Commanded OFF	Stuck/Welded When Commanded OFF
Operating Conditions: Vehicle speed 0-50 MPH (80 km/h) ***Parameter Normal Range:*** 0-6,000 RPM			
Clutch 1 Slip Speed	0 RPM	0-9,500 RPM	0 RPM
Clutch 1 Status	Applied	Released	Released

Circuit/System Description

The hybrid/electric vehicle (EV) powertrain control module 1 monitors the variable low and 1-2 reverse clutch slip speed for each Hybrid/EV Transmission Mode Command state. Low clutch slip speed when the clutch is commanded Off indicates a stuck or welded clutch condition. If the hybrid/EV powertrain control module 1 detects a stuck clutch condition, the hybrid/EV powertrain control module 1 will cycle the clutch 3 times within 30 seconds. The customer may feel 3 bumps before the DTC sets.

Conditions for Running the DTC

Variable low and 1-2 reverse clutch (C1) is commanded OFF.

Conditions for Setting the DTC

Clutch slip is less than 30 RPM 3 times within 30 seconds.

Action Taken When the DTC Sets

- P07A3 is a Type A DTC.
- Inhibits dual motor operation.

Conditions for Clearing the DTC

P07A3 is a Type A DTC.

Diagnostic Aids

When attempting to set transmission performance DTCs, observe the Freeze Frame and Failure Records to assist in duplicating the failure conditions. Ensure the transmission fluid level is correct and there are no leaks. If there are any other transmission DTCs set, diagnose those first.

Reference Information

Schematic Reference

Automatic Transmission Controls Schematics

Connector End View Reference

Component Connector End Views

Electrical Information Reference

- Circuit Testing
- Connector Repairs
- Testing for Intermittent Conditions and Poor Connections
- Wiring Repairs

DTC Type Reference

Powertrain Diagnostic Trouble Code (DTC) Type Definitions

Scan Tool Reference

Control Module References for scan tool information.

Circuit/System Verification

1. Verify that P0721, P0797, P0966, P0967, P0969, P0970, P0971, P0973, P0974, P0976, P0977, P1B03, P1B04, P215C, P2720, P2721, P2728, P2729, or P2730 is not set.
   If any of the DTCs are set, refer to Diagnostic Trouble Code (DTC) List - Vehicle .
2. Perform the Transmission Fluid Level and Condition Check to verify correct fluid level and condition.
   If the transmission fluid is low or discoloured, refer to Transmission Fluid Replacement .
3. Operate the vehicle in Dual Electric Motors and ICE mode while monitoring the Clutch 1 Slip Speed parameter. The Clutch 1 Slip Speed parameter should display greater than 30 RPM when the Clutch 1 Status parameter displays Released.
   If the DTC P07A3 resets, go to Component Testing.

Component Testing

1. Perform the Line Pressure Check .
2. Perform the Control Solenoid Valve and Transmission Control Module Assembly Solenoid Performance Test .
   If a malfunction is found, replace the Q8 control solenoid valve assembly.
3. Inspect the valve body assembly for sticking or damaged valves. Refer Control Valve Body Diagnostic Inspection .
   If you found a stuck or damaged valve, repair or replace the valve or valve body.
4. Inspect the variable low and 1-2 reverse clutch for a stuck On or damaged condition.
   If you found cause for concern in the variable low and 1-2 reverse clutch, repair or replace the variable low and 1-2 reverse clutch assembly as necessary.

Repair Instructions

Perform the Diagnostic Repair Verification after completing the diagnostic procedure.

- Variable Low and 1-2 Reverse Clutch Piston Removal and Variable Low and 1-2 Reverse Clutch Piston Installation for variable low and 1-2 reverse clutch repair or replacement.
- Control Valve Body Replacement for control valve body replacement.
- Perform the valve body inspection procedure, refer to Control Solenoid Valve and Transmission Control Module Assembly Inspection . If the inspection procedure indicates to replace the valve body, refer toControl Valve Body Replacement .
- Transmission Replacement for transmission removal.
- Control Module References for Control Solenoid Valve Assembly and Transmission Control Module Assembly replacement, programming and setup.

&#169© Copyright Chevrolet. All rights reserved

DTC P07A5

Diagnostic Instructions

- Perform the Diagnostic System Check - Vehicle prior to using this diagnostic procedure.
- Review Strategy Based Diagnosis for an overview of the diagnostic approach.
- Diagnostic Procedure Instructions provides an overview of each diagnostic category.

DTC Descriptor

DTC P07A5: Transmission Clutch 2 Stuck On

Typical Scan Tool Data

Variable High and 2-3-4 Clutch Reference

Parameter	Commanded ON	Commanded OFF	Stuck/Welded When Commanded OFF
Operating Conditions: Vehicle speed 0-50 MPH (80 km/h) ***Parameter Normal Range:*** 0-6,000 RPM			
Clutch 2 Slip Speed	0 RPM	0-6,000 RPM	0 RPM
Clutch 2 Status	Applied	Released	Released

Circuit/System Description

The hybrid/electric vehicle (EV) powertrain control module monitors the Clutch Slip parameters for each Hybrid/EV Transmission Mode Command state. Low clutch slip speed when the clutch is commanded Off indicates a stuck or welded clutch condition. If the hybrid/EV powertrain control module 1 detects a stuck clutch condition, the hybrid/EV powertrain control module 1 will cycle the clutch 3 times within 30 seconds. The customer may feel 3 bumps before the DTC sets.

Conditions for Running the DTC

Variable high and 2-3-4 clutch is commanded Off.

Conditions for Setting the DTC

- Clutch slip is less than 30 RPM 2 times within 20 seconds,
  or
- Engine speed is greater than 360 RPM and actual Variable high and 2-3-4 clutch slip speed is below 100 RPM 2 times within 20 seconds.

Action Taken When the DTC Sets

P07A5 is a Type A DTC.

Conditions for Clearing the DTC

P07A5 is a Type A DTC.

Diagnostic Aids

When attempting to set transmission performance DTCs, observe the Freeze Frame and Failure Records to assist in duplicating the failure conditions. Ensure the transmission fluid level is correct and there are no leaks. If there are any other transmission DTCs set, diagnose those first.

Reference Information

Schematic Reference

Automatic Transmission Controls Schematics

Connector End View Reference

Component Connector End Views

Electrical Information Reference

- Circuit Testing
- Connector Repairs
- Testing for Intermittent Conditions and Poor Connections
- Wiring Repairs

DTC Type Reference

Powertrain Diagnostic Trouble Code (DTC) Type Definitions

Scan Tool Reference

Control Module References for scan tool information.

Circuit/System Verification

1. Verify that P0721, P0776, P0777, P0966, P0967, P0969, P0970, P0971, P0973, P0974, P0976, P0977, P0AB9, P1B03, P1B04, P215C, P2720, P2721, P2728, P2729, or P2730 is not set.
   If any of the DTCs are set, refer to Diagnostic Trouble Code (DTC) List - Vehicle .
2. Perform the Transmission Fluid Level and Condition Check to verify correct fluid level and condition.
   If the transmission fluid is low or discoloured, refer to Transmission Fluid Replacement .
3. Operate the vehicle in Single Electric Motor or Single Electric Motor and ICE mode while observing the Clutch 2 Slip Speed parameter. The Clutch 2 Slip Speed parameter should display greater than 30 RPM when the Clutch 2 Status parameter displays Released.
   If the DTC P07A5 is set, go to Component Testing.

Component Testing

1. Perform the Line Pressure Check .
   If you found cause for concern, take corrective action.
2. Perform the Control Solenoid Valve and Transmission Control Module Assembly Solenoid Performance Test .
   If a malfunction is found, replace the Q8 control solenoid valve assembly.
3. Inspect the valve body assembly for sticking or damaged valves. Refer Control Valve Body Diagnostic Inspection .
   If you found cause for concern, repair or replace the valve or valve body.
4. Inspect the variable high and 2-3-4 clutch for a stuck On or damaged condition.
   If you found cause for concern in the variable high and 2-3-4 clutch, repair or replace the variable high and 2-3-4 clutch assembly as necessary.

Repair Instructions

Perform the Diagnostic Repair Verification after completing the diagnostic procedure.

- Variable High and 2-3-4 Clutch Hub and Clutch Removal and Variable High and 2-3-4 Clutch and Hub Installation for variable high and 2-3-4 clutch replacement or overhaul.
- Control Valve Body Replacement for control valve body replacement.
- Perform the valve body inspection procedure, refer to Control Solenoid Valve and Transmission Control Module Assembly Inspection . If the inspection procedure indicates to replace the valve body, refer toControl Valve Body Replacement .
- Transmission Replacement for transmission removal.
- Control Module References for Control Solenoid Valve Assembly and Transmission Control Module Assembly replacement, programming, and setup.

&#169© Copyright Chevrolet. All rights reserved

DTC P07A7

Diagnostic Instructions

- Perform the Diagnostic System Check - Vehicle prior to using this diagnostic procedure.
- Review Strategy Based Diagnosis for an overview of the diagnostic approach.
- Diagnostic Procedure Instructions provides an overview of each diagnostic category.

DTC Descriptor

DTC P07A7: Transmission Clutch 3 Stuck On

Typical Scan Tool Data

1-3 Reverse Clutch Reference

Parameter	Commanded ON	Commanded OFF	Stuck/Welded When Commanded OFF
Operating Conditions: Vehicle speed 0-50 MPH (80 km/h) ***Parameter Normal Range:*** 0-6,000 RPM			
Clutch 3 Slip Speed	0 RPM	0-6,000 RPM	0 RPM
Clutch 3 Status	Applied	Released	Released

Circuit/System Description

The hybrid/electric vehicle (EV) powertrain control module 1 monitors the clutch slip speed for each Hybrid/EV Transmission Mode Command. When the 1-3 Reverse Clutch is commanded OFF, low clutch slip speed indicates a stuck or welded clutch condition. If the hybrid/EV powertrain control module 1 detects a stuck clutch condition, the hybrid/EV powertrain control module 1 will cycle the clutch 3 times within 30 seconds. The customer may feel 3 bumps before the DTC sets.

Conditions for Running the DTC

- 1-3 Reverse Clutch is commanded Off.

- The Calculated Trans Input Speed is greater than 360 RPM.

Conditions for Setting the DTC

The 1-3 Reverse Clutch is commanded OFF for 3 seconds and the hybrid/EV powertrain control module 1 detects the clutch 3 slip speed is less than 100 RPM for 3 seconds, when commanded OFF.

Action Taken When the DTC Sets

DTC P07A7 is a Type A DTC.

Conditions for Clearing the DTC

DTC P07A7 is a Type A DTC.

Diagnostic Aids

When attempting to set transmission performance DTCs, observe the Freeze Frame and Failure Records to assist in duplicating the failure conditions. Ensure the transmission fluid level is correct and there are no leaks. If there are any other transmission DTCs set, diagnose those first.

Reference Information

Schematic Reference

Automatic Transmission Controls Schematics

Connector End View Reference

Component Connector End Views

Electrical Information Reference

- Circuit Testing
- Connector Repairs
- Testing for Intermittent Conditions and Poor Connections
- Wiring Repairs

DTC Type Reference

Powertrain Diagnostic Trouble Code (DTC) Type Definitions

Scan Tool Reference

Control Module References for scan tool information.

Circuit/System Verification

1. Verify that P0721, P0966, P0967, P0969, P0970, P0971, P0973, P0974, P0976, P0977, P2720, P2721, P2728, P2729, or P2730 is not set.
   If any of the DTCs are set, refer to Diagnostic Trouble Code (DTC) List - Vehicle .
2. Perform the Transmission Fluid Level and Condition Check to verify correct fluid level and condition.
   If the transmission fluid is low or discoloured, refer to Transmission Fluid Replacement .
3. Operate the transmission in Single Electric Motor or Dual Electric Motors modes while observing the Clutch 3 Slip Speed parameter. The Clutch 3 Slip Speed parameter display should be greater than 100 RPM when the Clutch 3 Status parameter displays Released.
   If the DTC P07A7 is set, refer to Component Testing.

Component Testing

1. Perform the Line Pressure Check .
   If you found cause for concern, take corrective action.
2. Perform the Control Solenoid Valve and Transmission Control Module Assembly Solenoid Performance Test .
   If a malfunction is found, replace the Q8 control solenoid valve assembly.
3. Inspect the shift solenoid valve for stuck or damaged condition.
   If you found cause for concern in the shift solenoid, repair or replace the valve or valve body.
4. Inspect the 1-3 reverse clutch assembly for a stuck ON or damaged condition. Refer Control Valve Body Diagnostic Inspection .
   If you found cause for concern in the 1-3 reverse clutch assembly, repair or replace the low and reverse clutch assembly as necessary.

Repair Instructions

Perform the Diagnostic Repair Verification after completing the diagnostic procedure.

- Control Valve Body Replacement for control valve body replacement.
- Control Valve Body Diagnostic Inspection .
- 1-3-Reverse Clutch Disassemble and 1-3-Reverse Clutch Assemble for 1-3 Reverse Clutch assembly repair or replacement.
- Transmission Replacement for transmission removal.
- Control Module References for Control Solenoid Valve Assembly and Transmission Control Module Assembly replacement, programming and setup.

&#169© Copyright Chevrolet. All rights reserved

DTC P0961-P0963

Diagnostic Instructions

- Perform the Diagnostic System Check - Vehicle prior to using this diagnostic procedure.
- Review Strategy Based Diagnosis for an overview of the diagnostic approach.
- Diagnostic Procedure Instructions provides an overview of each diagnostic category.

DTC Descriptor

DTC P0961: Line Pressure Control Solenoid System Performance

DTC P0962: Line Pressure Control Solenoid Control Circuit Low Voltage

DTC P0963: Line Pressure Control Solenoid Control Circuit High Voltage

Diagnostic Fault Information

Circuit	Short to Ground	Open/High Resistance	Short to Voltage	Signal Performance
Line Pressure Control Solenoid Low Side Driver	P0962	P0963	P0963	P0961

Circuit/System Description

The line pressure control solenoid regulates the transmission fluid line pressure. The transmission control module varies the current to the normally high line pressure control solenoid valve from 0.1 amp for maximum line pressure, to 1.1 amps for minimum line pressure. This is accomplished by varying the current in order to obtain the desired line pressure in kPa (psi). The line pressure control solenoid is part of the control solenoid valve assembly and is not serviced separately.

Conditions for Running the DTC

- The propulsion system is active.
- The system voltage is 11-18 volts.

Conditions for Setting the DTC

P0961

The transmission control module detects an internal electrical performance malfunction of the line pressure control solenoid control circuit for 5 seconds.

P0962

The transmission control module detects an internal low voltage electrical malfunction of the line pressure control solenoid control circuit for 300 milliseconds.

P0963

The transmission control module detects an internal high voltage electrical malfunction of the line pressure control solenoid control circuit for 300 milliseconds.

Action Taken When the DTC Sets

- DTC P0961 is a Type B DTC.
- DTCs P0962 and P0963 are Type A DTCs.

DTC P0962

The transmission control module commands maximum line pressure.

Conditions for Clearing the DTC

- DTC P0961 is a Type B DTC.
- DTCs P0962 and P0963 are Type A DTCs.

Reference Information

Schematic Reference

Automatic Transmission Controls Schematics

Connector End View Reference

Component Connector End Views

Electrical Information Reference

- Circuit Testing
- Connector Repairs
- Testing for Intermittent Conditions and Poor Connections
- Wiring Repairs

DTC Type Reference

Powertrain Diagnostic Trouble Code (DTC) Type Definitions

Scan Tool Reference

Control Module References for scan tool information.

Circuit/System Verification

1. Vehicle ON, verify the transmission fluid temperature is between 50-80°C (122-176°F).
2. Drive the vehicle, observe the scan tool Line Pressure Control Solenoid Valve Test Status parameters. The reading should display OK.
   If the reading is not within the specified value, replace the Q8 control solenoid valve assembly.

Repair Instructions

Perform the Diagnostic Repair Verification after completing the diagnostic procedure.

- Control Solenoid Valve and Transmission Control Module Assembly Inspection for Control Solenoid Valve Assembly inspection.
- Control Module References for Control Solenoid Valve Assembly and Transmission Control Module Assembly replacement, programming, and setup.

&#169© Copyright Chevrolet. All rights reserved

DTC P0965-P0967

Diagnostic Instructions

- Perform the Diagnostic System Check - Vehicle prior to using this diagnostic procedure.
- Review Strategy Based Diagnosis for an overview of the diagnostic approach.
- Diagnostic Procedure Instructions provides an overview of each diagnostic category.

DTC Descriptor

DTC P0965: Pressure Control Solenoid 2 System Performance

DTC P0966: Pressure Control Solenoid 2 Control Circuit Low Voltage

DTC P0967: Pressure Control Solenoid 2 Control Circuit High Voltage

Diagnostic Fault Information

Circuit	Short to Ground	Open/High Resistance	Short to Voltage	Signal Performance
Clutch Pressure Control Solenoid 2 Control	P0966	P0967	P0967	P0965

Circuit/System Description

The transmission control module supplies 12 volts to the clutch pressure control solenoid 2 on the high side driver 2 circuit. The transmission control module controls the pressure control solenoid 2 through the clutch pressure control solenoid 2 control circuit. The normally high clutch pressure control solenoid 2 directs fluid flow to the variable high and 2-3-4 clutch assembly and drive motor 2 when commanded ON. The clutch pressure control solenoid 2 is part of the control solenoid valve assembly and is not serviced separately.

Conditions for Running the DTC

The system voltage is 11-16 V.

Conditions for Setting the DTC

P0965

The transmission control module detects an internal electrical performance malfunction of the clutch pressure control solenoid control circuit for 5 seconds.

P0966

The transmission control module detects an internal low voltage electrical malfunction of the clutch pressure control solenoid control circuit for 1 second.

P0967

The transmission control module detects an internal high voltage electrical malfunction of the clutch pressure control solenoid control circuit for 1 second.

Action Taken When the DTC Sets

- DTC P0965 is a Type B DTC.
- DTCs P0966 and P0967 are Type A DTCs.

Conditions for Clearing the DTC

- DTC P0965 is a Type B DTC.
- DTCs P0966 and P0967 are Type A DTCs.

Reference Information

Schematic Reference

Automatic Transmission Controls Schematics

Connector End View Reference

Component Connector End Views

Electrical Information Reference

- Circuit Testing
- Connector Repairs

- Testing for Intermittent Conditions and Poor Connections
- Wiring Repairs

DTC Type Reference

Powertrain Diagnostic Trouble Code (DTC) Type Definitions

Scan Tool Reference

Control Module References for scan tool information.

Circuit/System Verification

1. Vehicle ON, verify the transmission fluid temperature is between 50-80°C (122-176°F).
2. Drive the vehicle in order to obtain dual motor or dual motor and ICE mode, observe the scan tool Pressure Control Solenoid Valve 2 Performance Test Status parameters. The readings should display OK.
   If the reading is not within the specified range, replace the Q8 control solenoid valve assembly.

Repair Instructions

Perform the Diagnostic Repair Verification after completing the diagnostic procedure.

Control Module References for Control Solenoid Valve Assembly and Transmission Control Module Assembly replacement, programming, and setup.

&#169© Copyright Chevrolet. All rights reserved

DTC P0969-P0971

Diagnostic Instructions

- Perform the Diagnostic System Check - Vehicle prior to using this diagnostic procedure.
- Review Strategy Based Diagnosis for an overview of the diagnostic approach.
- Diagnostic Procedure Instructions provides an overview of each diagnostic category.

DTC Descriptor

DTC P0969: Pressure Control Solenoid 3 System Performance

DTC P0970: Pressure Control Solenoid 3 Control Circuit Low Voltage

DTC P0971: Pressure Control Solenoid 3 Control Circuit High Voltage

Diagnostic Fault Information

Circuit	Short to Ground	Open/High Resistance	Short to Voltage	Signal Performance
Clutch Pressure Control Solenoid 3 Control	P0970	P0971	P0971	P0969

Circuit/System Description

The transmission control module (TCM) supplies 12 volts to the clutch pressure control solenoid 3 on the high side driver 1 circuit. The transmission control module controls the clutch pressure control solenoid 3 through the clutch pressure control solenoid 3 control circuit. The normally high clutch pressure control solenoid 3 controls fluid to the variable low and 1-2 reverse clutch when commanded ON and exhausts fluid when commanded OFF. The clutch pressure control solenoid 3 regulates the transmission fluid pressure to the variable low and 1-2 reverse clutch. The clutch pressure control solenoid 3 is part of the control solenoid valve assembly and is not serviced separately.

Conditions for Running the DTC

- Propulsion system is active.
- The system voltage is 11-16 V.

Conditions for Setting the DTC

P0969

The transmission control module detects an internal electrical performance malfunction of the clutch pressure control solenoid control circuit for 5 seconds.

P0970

The transmission control module detects an internal low voltage electrical malfunction of the clutch pressure control solenoid control circuit for 1 second.

P0971

The transmission control module detects an internal high voltage electrical malfunction of the clutch pressure control solenoid control circuit for 1 second.

Action Taken When the DTC Sets

- DTC P0969 is a Type B DTC.
- DTCs P0970 and P0971 are Type A DTCs.

Conditions for Clearing the DTC

- DTC P0969 is a Type B DTC.
- DTCs P0970 and P0971 are Type A DTCs.

Reference Information

Schematic Reference

Automatic Transmission Controls Schematics

Connector End View Reference

Component Connector End Views

Electrical Information Reference

- Circuit Testing
- Connector Repairs

- Testing for Intermittent Conditions and Poor Connections
- Wiring Repairs

DTC Type Reference

Powertrain Diagnostic Trouble Code (DTC) Type Definitions

Circuit/System Verification

1. Vehicle ON, verify the transmission fluid temperature is between 50-80°C (122-176°F).
2. Drive the vehicle in order to obtain dual motor or dual motor and ICE mode, observe the scan tool Pressure Control Solenoid Valve 3 Performance Test Status parameters. The reading should display OK.
   If the reading is not within the specified range, replace the Q8 control solenoid valve assembly.

Repair Instructions

Perform the Diagnostic Repair Verification after completing the diagnostic procedure.

Control Module References for Control Solenoid Valve Assembly and Transmission Control Module Assembly replacement, programming, and setup.

&#169© Copyright Chevrolet. All rights reserved

DTC P0973 or P0974

Diagnostic Instructions

- Perform the Diagnostic System Check - Vehicle prior to using this diagnostic procedure.
- Review Strategy Based Diagnosis for an overview of the diagnostic approach.
- Diagnostic Procedure Instructions provides an overview of each diagnostic category.

DTC Descriptor

DTC P0973: Shift Solenoid (SS) 1 Control Circuit Low Voltage

DTC P0974: Shift Solenoid (SS) 1 Control Circuit High Voltage

Diagnostic Fault Information

Circuit	Short to Ground	Open/High Resistance	Short to Voltage	Signal Performance
Shift Solenoid (SS) 1 Control	P0973	P0974	P0974	--

Circuit/System Description

The control solenoid valve assembly supplies 12 volts to shift solenoid 1 on the high side driver 1 circuit. The control solenoid valve assembly controls the normally closed shift solenoid 1 on the shift solenoid 1 control circuit. The shift solenoid 1 is part of the control solenoid valve assembly and is not serviced separately.

Conditions for Running the DTC

The system voltage is 11-16 V.

Conditions for Setting the DTC

P0973

The control solenoid valve assembly detects an internal low voltage electrical malfunction of the shift solenoid 1 control circuit for 1 second.

P0974

The control solenoid valve assembly detects an internal high voltage electrical malfunction of the shift solenoid 1 control circuit for 1 second.

Action Taken When the DTC Sets

DTCs P0973 and P0974 are Type A DTCs.

Conditions for Clearing the DTC

DTCs P0973 and P0974 are Type A DTCs.

Diagnostic Aids

This fault may set transmission over-temperature DTCs.

Reference Information

Schematic Reference

Automatic Transmission Controls Schematics

Connector End View Reference

Component Connector End Views

Electrical Information Reference

- Circuit Testing
- Connector Repairs
- Testing for Intermittent Conditions and Poor Connections
- Wiring Repairs

DTC Type Reference

Powertrain Diagnostic Trouble Code (DTC) Type Definitions

Scan Tool Reference

Control Module References for scan tool information.

Circuit/System Verification

1. Vehicle ON, verify the transmission fluid temperature is between 50-80°C (122-176°F).
2. Drive the vehicle, observe the scan tool Shift Solenoid Valve 1 Control Circuit Test Status parameters. The reading should display OK.
   If the reading is not within the specified range, replace the Q8 control solenoid valve assembly.

Repair Instructions

Perform the Diagnostic Repair Verification after completing the diagnostic procedure.

Control Module References for Control Solenoid Valve Assembly and Transmission Control Module Assembly replacement, programming, and setup.

&#169© Copyright Chevrolet. All rights reserved

DTC P0976 or P0977

Diagnostic Instructions

- Perform the Diagnostic System Check - Vehicle prior to using this diagnostic procedure.
- Review Strategy Based Diagnosis for an overview of the diagnostic approach.
- Diagnostic Procedure Instructions provides an overview of each diagnostic category.

DTC Descriptor

DTC P0976: Shift Solenoid (SS) 2 Control Circuit Low Voltage

DTC P0977: Shift Solenoid (SS) 2 Control Circuit High Voltage

Diagnostic Fault Information

Circuit	Short to Ground	Open/High Resistance	Short to Voltage	Signal Performance
Shift Solenoid Valve 2 Control	P0976	P0977	P0977	--

Circuit/System Description

The control solenoid valve assembly supplies 12 volts to shift solenoid 2 on the high side driver 1 circuit. The control solenoid valve assembly controls the normally closed shift solenoid 2 on the shift solenoid 2 control circuit. The shift solenoid 2 is part of the control solenoid valve assembly and is not serviced separately.

Conditions for Running the DTC

- The propulsion system is active.
- The system voltage is 11-16 V.

Conditions for Setting the DTC

P0976

The transmission control module detects an internal low voltage electrical malfunction of the shift solenoid 2 control circuit for 1 second.

P0977

The transmission control module detects an internal high voltage electrical malfunction of the shift solenoid 2 control circuit for 1 second.

Action Taken When the DTC Sets

- DTCs P0976 and P0977 are Type A DTCs.
- P0976 Inhibit motor 2 cooling and dual motor modes P0977 generator function will not be available, inhibit motor 2 cooling and single motor modes.

Conditions for Clearing the DTC

DTCs P0976 and P0977 are Type A DTCs.

Diagnostic Aids

This fault may cause transmission over-temperature DTCs to set.

Reference Information

Schematic Reference

Automatic Transmission Controls Schematics

Connector End View Reference

Component Connector End Views

Electrical Information Reference

- Circuit Testing
- Connector Repairs
- Testing for Intermittent Conditions and Poor Connections
- Wiring Repairs

DTC Type Reference

Powertrain Diagnostic Trouble Code (DTC) Type Definitions

Scan Tool Reference

Control Module References for scan tool information.

Circuit/System Verification

1. Vehicle ON, verify the transmission fluid temperature is between 50-80°C (122-176°F).
2. Drive the vehicle, observe the scan tool Shift Solenoid Valve 2 Control Circuit Test Status parameters. The reading should display OK.
   If the reading is not within the specified range, replace the Q8 control solenoid valve assembly.

Repair Instructions

Perform the Diagnostic Repair Verification after completing the diagnostic procedure.

Control Module References for Control Solenoid Valve Assembly and Transmission Control Module Assembly replacement, programming, and setup.

&#169© Copyright Chevrolet. All rights reserved

DTC P1762

Diagnostic Instructions

- Perform the Diagnostic System Check - Vehicle prior to using this diagnostic procedure.
- Review Strategy Based Diagnosis for an overview of the diagnostic approach.
- Diagnostic Procedure Instructions provides an overview of each diagnostic category.

DTC Descriptor

DTC P1762: Transmission Mode Switch Signal Message Counter Incorrect

Circuit/System Description

The ECM monitors the state of the drive mode switch signal message from the body control module (BCM), over the serial data circuits. The ECM uses this message to determine the following driver selected mode of operation:

- Normal
- Sport
- Mountain

Conditions for Running the DTC

The propulsion system is active.

Conditions for Setting the DTC

The ECM has detected a drive mode signal rolling count error for 0.8 seconds.

Action Taken When the DTC Sets

DTC P1762 is a Type C DTC.

Conditions for Clearing the DTC

DTC P1762 is a Type C DTC.

Diagnostic Aids

When attempting to set ECM serial data DTCs, run the vehicle in propulsion system active mode for at least 1 minute, and then shut the vehicle off for 30 seconds. Following this procedure will allow for a complete ECM shutdown.

Reference Information

Schematic Reference

Automatic Transmission Controls Schematics

Connector End View Reference

Component Connector End Views

Electrical Information Reference

- Circuit Testing
- Connector Repairs
- Testing for Intermittent Conditions and Poor Connections
- Wiring Repairs

DTC Type Reference

Powertrain Diagnostic Trouble Code (DTC) Type Definitions

Scan Tool Reference

Control Module References for scan tool information.

Circuit/System Verification

Run the vehicle in propulsion system active mode for 1 minute, then vehicle OFF for 30 seconds.

The DTC should not reset.

Circuit/System Testing

1. Verify DTC P1824, P182A-P182F, P1838, or P1839 is not set.
   If any of the DTCs are set, refer to Diagnostic Trouble Code (DTC) List - Vehicle .
2. If the DTC is set, program the K20 ECM. If the DTC resets, replace the K20 ECM.

Repair Instructions

Perform the Diagnostic Repair Verification after completing the diagnostic procedure.

Control Module References for ECM replacement, programming and setup.

&#169© Copyright Chevrolet. All rights reserved

DTC P1824, P182A-P182F, P1838, or P1839

Diagnostic Instructions

- Perform the Diagnostic System Check - Vehicle prior to using this diagnostic procedure.
- Review Strategy Based Diagnosis for an overview of the diagnostic approach.
- Diagnostic Procedure Instructions provides an overview of each diagnostic category.

DTC Descriptor

DTC P1824: Internal Mode Switch P Circuit High Voltage

DTC P182A: Internal Mode Switch A Circuit Low Voltage

DTC P182B: Internal Mode Switch B Circuit Low Voltage

DTC P182C: Internal Mode Switch B Circuit High Voltage

DTC P182D: Internal Mode Switch P Circuit Low Voltage

DTC P182E: Internal Mode Switch-Invalid Range

DTC P182F: Internal Mode Switch C Circuit High Voltage

DTC P1838: Internal Mode Switch A Circuit High Voltage

DTC P1839: Internal Mode Switch C Circuit Low Voltage

Diagnostic Fault Information

Circuit	Short to Ground	Open/High Resistance	Short to Voltage	Signal Performance
Transmission Range Signal A	P182A	P1838	P1838	P182E

Transmission Range Signal B	P182B	P182C	P182C	P182E
Transmission Range Signal C	P1839	P182F	P182F	P182E
Transmission Range Signal P	P182D	P1824	P1824	P182E
Ground	--	P182A, P182C, P182F, P1838	--	P182E

Typical Scan Tool Data

IMS A/B/C/P

Circuit	Normal Range	Short to Ground	Open	Short to Voltage
Operating Conditions: Vehicle ON, range selector in Park				
Transmission Range Signal A	LOW	LOW	HI	HI
Transmission Range Signal B	HI	LOW	HI	HI
Transmission Range Signal C	HI	LOW	HI	HI
Transmission Range Signal P	LOW	LOW	HI	HI
HI = 12 volts LOW = 0 volts				

Transmission Internal Mode Switch Logic

Gear Selector Position	Signal A	Signal B	Signal C	Signal P
Park (P)	LOW	HI	HI	LOW
Reverse (R)	LOW	LOW	HI	HI
Neutral (N)	HI	LOW	HI	LOW
Drive (D)	HI	LOW	LOW	HI
Low (L)	HI	HI	LOW	LOW

Circuit/System Description

The automatic transmission manual shift shaft position switch assembly, also called the internal mode switch assembly, is a dual sliding hall-effect switch attached to the control valve body within the transmission. The 9 outputs from the switch indicate which position is selected by the transmission manual shaft. Four outputs (A, B, C, P) are range selection inputs to the transmission control module (TCM). Five outputs (R1, R2, D1, D2, S) are direction selection inputs to the hybrid powertrain control module. The input voltage at the modules is high when the switch is open and low when the switch is closed to ground. The state of each input is displayed on the scan tool as Internal Mode Switch A/B/C/P and Internal Mode Switch Status D1/D2/R1/R2/S. The Internal Mode Switch Range input parameters represented are transmission range signal A, signal B, signal C, and signal P. The Internal Mode Switch Direction input parameters represented as Internal Mode Switch Status signal R1, signal R2, signal D1, signal D2, and signal Start.

Conditions for Running the DTC

- No Output Shaft Speed DTCs P0722 or P077B.
- The system voltage is 11-18 V.

P182E

- Vehicle ON greater than 5 seconds.
- The system voltage is 11-18 V.

Conditions for Setting the DTC

Any one or more of the following conditions:

- The IMS signal circuit A, B, or P are Low in Park for greater than 8 seconds.
- The IMS signal circuit A is Low in D for 8 seconds.
- The IMS signal circuit C is High in D for 8 seconds.
- The TCM detects an invalid range from the IMS for 3.25 seconds.
- The IMS signal circuit C is high in D for greater than 8 seconds.
- Park/Neutral Switch equals P/N and the IMS state is not Park or Neutral, or the Park/Neutral switch is not Park or Neutral and the IMS state equals Park or Neutral for 4 seconds.
- Or the automatic transmission manual shift shaft position switch assembly indicates a transitional state for 8 seconds.

Action Taken When the DTC Sets

The PRNDL position indicator on the instrument cluster will be blank.

Conditions for Clearing the DTC

DTCs P1824, P182A-P182F, P1838, and P1839 are Type B DTCs.

Diagnostic Aids

The automatic transmission manual shift shaft position switch assembly connects electrically to the control solenoid valve assembly. Inspect the automatic transmission manual shift shaft position switch, harness, connector, and control solenoid assembly pins for metallic debris. Use a terminal test kit for any test that requires probing the control solenoid assembly harness connector or a component harness connector. The automatic transmission manual shift shaft position switch assembly can be damaged by currents exceeding 2 mA. Test the automatic transmission manual shift shaft position switch assembly for an open condition whenever a short to voltage condition is observed.

Reference Information

Schematic Reference

Automatic Transmission Controls Schematics

Connector End View Reference

Component Connector End Views

Electrical Information Reference

- Circuit Testing
- Connector Repairs
- Testing for Intermittent Conditions and Poor Connections
- Wiring Repairs

DTC Type Reference

Powertrain Diagnostic Trouble Code (DTC) Type Definitions

Scan Tool Reference

Control Module References for scan tool information.

Circuit/System Verification

1. Vehicle ON, observe the scan tool Internal Mode Switch A/B/C/P parameter while moving the gear shift lever from Park, through all gear selector positions, and back to Park. The parameter should match each gear range that is selected. Refer to Transmission Internal Mode Switch Logic .
2. Perform the Range Selector Lever Cable Adjustment procedure to verify correct adjustment.
3. Operate the vehicle within the Conditions for Running the DTC to verify the DTC does not reset. You may also operate the vehicle within the conditions that you observed from the Freeze Frame/Failure Records data.

Circuit/System Testing

1. Vehicle OFF, remove the control valve body cover. Refer to Control Valve Body Cover Removal .
2. Vehicle OFF, disconnect the X2 harness connector at the B15 Transmission Internal Mode Switch.
3. Vehicle OFF, all systems OFF. It may take up to 2 minutes for all vehicle systems to power down. Test for less than 10.0 Ω between the ground circuit terminal 7 and ground.

If greater than the specified range, test the ground circuit for an open/high resistance. If the circuit tests normal, replace the Q8 control solenoid assembly.

4. Vehicle ON, Verify the scan tool Internal Mode Switch A/B/C/P parameter displays HI for all four signal circuits.
   If not the specified value, test the signal circuits for a short to ground or short together. If the circuits test normal, replace the Q8 control solenoid valve assembly.
5. Vehicle ON, test for 9.6-12.5V between the voltage circuit terminal 2 and terminal 7.
   If not within the specified range, test the voltage circuit for an open/high resistance. If the circuit tests normal, replace the Q8 control solenoid assembly.
6. Vehicle ON, Install a 3 A fused jumper wire between each signal circuit listed below and the ground circuit terminal 7. Verify the scan tool Internal Mode Switch A/B/C/P parameter is Low:
   - Switch Signal A: terminal 6 to terminal 7
   - Switch Signal B: terminal 5 to terminal 7
   - Switch Signal C: terminal 4 to terminal 7
   - Switch Signal P: terminal 3 to terminal 7

   If not the specified value, test the signal circuit for a short to voltage or an open/high resistance. If the circuit tests normal, replace the Q8 control solenoid assembly.
7. If all circuits test normal, replace the B15 Transmission Internal Mode Switch.

Repair Instructions

Perform the Diagnostic Repair Verification after completing the diagnostic procedure.

Note: Perform the Control Solenoid Valve and Transmission Control Module Assembly Inspection for the following components before replacing the components.

- Manual Shift Shaft Position Switch and Fluid Level Control Valve Removal and Manual Shift Shaft Position Switch and Fluid Level Control Valve Installation for Manual Shift Shaft Position Switch, also called the Internal Mode Switch, replacement.
- Automatic Transmission Wiring Harness and Output Speed Sensor Removal and Automatic Transmission Wiring Harness and Output Speed Sensor Installation for Automatic Transmission Control Wiring Extension Harness Assembly replacement.
- Control Module References for Control Solenoid Valve Assembly and Transmission Control Module Assembly replacement, programming, and setup.

&#169© Copyright Chevrolet. All rights reserved

DTC P215B

Diagnostic Instructions

- Perform the Diagnostic System Check - Vehicle prior to using this diagnostic procedure.
- Review Strategy Based Diagnosis for an overview of the diagnostic approach.
- Diagnostic Procedure Instructions provides an overview of each diagnostic category.

DTC Descriptor

DTC P215B: Vehicle Speed - Output Shaft Speed (OSS) Correlation

Diagnostic Fault Information

Circuit	Short to Ground	Open/High Resistance	Short to Voltage	Signal Performance
OSS Supply Voltage	P0722, P0723	P0722, P0723	P0722, P0723	P0721, P215B
OSS Signal	P0722, P0723	P0722, P0723	P0722, P0723	P0721, P215B

Typical Scan Tool Data

Transmission Output Shaft Speed Sensor

Circuit	Normal Range	Open/High Resistance	Short to Voltage
Operating Conditions: Engine running, normal operating temperature			
Signal	0-7,000 RPM	0 RPM	0 RPM
Supply Voltage	-	0 RPM	0 RPM

OSS Supply Voltage

Circuit	Normal Range	Open/High Resistance	Short to Voltage

Operating Conditions: Key ON, Engine OFF or Engine running, normal operating temperature			
Signal	OK	OK	OK
Supply Voltage	OK	Out of Range	Out of Range
8.3-9.3 Volts = OK, Any other voltage = Out of range			

Circuit/System Description

The A/Trans Output Speed Sensor Assembly has 2 internal hall-effect type sensors, and is capable of sensing both speed and direction. The output speed sensor is internal to the transmission and mounts to the A/Trans case assembly and is connected to the transmission control module (TCM) through the control solenoid valve assembly and transmission internal harness. The A/Trans Output Speed Sensor Assembly faces the park gear machined teeth surface. The sensor receives 8.3-9.3 volts on the OSS supply voltage circuit from the TCM. As the output shaft rotates, the sensor produces a signal frequency based on the machined surface of the output shaft.

The two sensor elements in the output speed sensor assembly are spaced approximately 1/2 a tooth apart.

- When the vehicle is moving in a forward direction, sensor A detects a particular tooth before sensor B.
- When the vehicle is moving in a reverse direction, sensor B detects a particular tooth before sensor A.

The electronics in the sensor combine the two signals and send a signal with a different pulse width. This signal is interpreted by the transmission control module for speed and direction and is transmitted through the serial data circuits to the engine control module (ECM) and the hybrid powertrain control module. The ECM, hybrid powertrain control module, and transmission control module compare the output speed sensor signal with the anti lock brake system (ABS) wheel speed sensor signal. The TCM is part of the control solenoid valve assembly and is not serviced separately. The hybrid powertrain control module is part of the drive motor generator power inverter module and is not serviced separately.

Conditions for Running the DTC

- The vehicle speed is greater than 10 km/h (6 mph).
- The vehicle is not in Park or neutral.

Conditions for Setting the DTC

ECM

The ECM OSS signal and the ABS wheel speed sensor signals differ by greater than 10 km/h (6 mph) for more than 10 seconds.

Hybrid Powertrain Control Module

The ECM OSS signal and the ABS wheel speed sensor signals differ by greater than 10 km/h (6 mph) for more than 10 seconds.

Action Taken When the DTC Sets

ECM

- The ECM commands reduced vehicle power.
- PROPULSION POWER REDUCED message is displayed on the driver information centre.

Hybrid Powertrain Control Module

The hybrid powertrain control module calculates the transmission output speed.

Conditions for Clearing the DTC

ECM

P215B is a Type A DTC.

Hybrid Powertrain Control Module

P215B is a Type B DTC.

Diagnostic Aids

The hybrid system is very sensitive to the OSS signal for overall operation.

Reference Information

Schematic Reference

Automatic Transmission Controls Schematics

Connector End View Reference

Component Connector End Views

Electrical Information Reference

- Circuit Testing
- Connector Repairs
- Testing for Intermittent Conditions and Poor Connections

- Wiring Repairs

DTC Type Reference

Powertrain Diagnostic Trouble Code (DTC) Type Definitions

Scan Tool Reference

Control Module References for scan tool information.

Circuit/System Verification

1. Inspect for broken driveline components.
2. Operate the vehicle at 16-32 km/h (10-20 mph) while observing the Transmission OSS and ABS wheel parameters on the scan tool.

The OSS and ABS wheel speed signal displays should not vary by greater than 10 km/h (6 mph).

Circuit/System Testing

1. Verify that DTC C0035-C0050, C1207-C1210, C1221-C1228, C1232-C1235, C005A, C0245, C122E, P0721, P0722, P0723, U0073, U0074, U0077, U0101, U0129, or U1833 is not set.
   If any of the DTCs are set, refer to Diagnostic Trouble Code (DTC) List - Vehicle .
2. Program the control module which set the DTC with the latest software version and retest for DTCs.
   If the DTC resets, replace the control module which set the DTC.

Repair Instructions

Perform the Diagnostic Repair Verification after completing the diagnostic procedure.

Control Module References for ECM or Drive Motor Generator Power Inverter Module, also called the Power Inverter Module, replacement, programming, and setup.

&#169© Copyright Chevrolet. All rights reserved

DTC P215C

Diagnostic Instructions

- Perform the Diagnostic System Check - Vehicle prior to using this diagnostic procedure.
- Review Strategy Based Diagnosis for an overview of the diagnostic approach.
- Diagnostic Procedure Instructions provides an overview of each diagnostic category.

DTC Descriptor

DTC P215C: Output Shaft Speed (OSS) - Wheel Speed Correlation

Diagnostic Fault Information

Circuit	Short to Ground	Open/High Resistance	Short to Voltage	Signal Performance
OSS Supply Voltage	P215C	P0721, P215C	P0721, P215C	P077B, P0721, P215C
OSS Signal	P215C	P0721, P215C	P0721, P215C	P077B, P0721, P215C

Typical Scan Tool Data

Transmission OSS

Circuit	Normal Range	Open/High Resistance	Short to Voltage
Operating Conditions: Engine running, normal operating temperature			
OSS Signal	0-7,000 RPM	0 RPM	0 RPM
OSS Supply Voltage	-	0 RPM	0 RPM

OSS Supply Voltage

Circuit	Normal Range	Open/High Resistance	Short to Voltage

Operating Conditions: Key ON, Engine OFF or Engine running, normal operating temperature			
OSS Signal	OK	OK	OK
OSS Supply Voltage	OK	Out of Range	Out of Range
8.3-9.3 Volts = OK, Any other voltage = Out of range			

Circuit/System Description

The A/Trans Output Speed Sensor Assembly has 2 internal hall-effect type sensors, and is capable of sensing both speed and direction. The output speed sensor is internal to the transmission and mounts to the A/Trans case assembly and is connected to the transmission control module (TCM) through the control solenoid valve assembly and transmission internal harness. The A/Trans Output Speed Sensor Assembly faces the park gear machined teeth surface. The sensor receives 8.3-9.3 volts on the OSS supply voltage circuit from the TCM. As the output shaft rotates, the sensor produces a signal frequency based on the machined surface of the output shaft.

The two sensor elements in the output speed sensor assembly are spaced approximately 1/2 a tooth apart.

- When the vehicle is moving in a forward direction, sensor A detects a particular tooth before sensor B.
- When the vehicle is moving in a reverse direction, sensor B detects a particular tooth before sensor A.

The electronics in the sensor combine the two signals and send a signal with a different pulse width. This signal is interpreted by the transmission control module for speed and direction and is transmitted through the serial data circuits to the engine control module (ECM) and the hybrid powertrain control module. The ECM, hybrid powertrain control module, and transmission control module compare the output speed sensor signal with the anti lock brake system (ABS) wheel speed sensor signal. The TCM is part of the control solenoid valve assembly and is not serviced separately. The hybrid powertrain control module is part of the drive motor generator power inverter module and is not serviced separately.

Conditions for Running the DTC

- The vehicle is moving.
- The transmission control module correlates the transmission output speed with the ABS wheel speed and motor speed to detect any failures in the transmission output speed sensor.

Conditions for Setting the DTC

The difference between transmission output speed and the calculated average of output speed from the drive motors and ABS wheel speed sensors is greater than 150 RPM. The difference between the average of wheel speed sensors and drive motors and the output speed sensor is greater than 175 RPM.

Action Taken When the DTC Sets

- P215C is a Type B DTC.
- The transmission control module calculates output speed based on the ABS wheel speed.
- The HCP calculates vehicle direction based on drive motor direction.

Conditions for Clearing the DTC

P215C is a Type B DTC.

Reference Information

Schematic Reference

Automatic Transmission Controls Schematics

Connector End View Reference

Component Connector End Views

Description and Operation

Electronic Component Description

Electrical Information Reference

- Circuit Testing
- Connector Repairs
- Testing for Intermittent Conditions and Poor Connections
- Wiring Repairs

DTC Type Reference

Powertrain Diagnostic Trouble Code (DTC) Type Definitions

Scan Tool Reference

Control Module References for scan tool information.

Special Tools

EL 38522 Variable Signal Generator

Circuit/System Verification

Operate the vehicle at 16-32 km/h (10-20 mph) while observing the Transmission OSS and ABS wheel parameters on the scan tool.

The Transmission OSS and ABS wheel speed signal parameters should not vary by greater than 10 km/h (6 mph).

Circuit/System Testing

1. Verify that DTC C0035-C0050, C1207-C1210, C1221-C1228, C1232-C1235, C005A, C0245, or C122E is not set in the electronic brake control module.
   If the DTC is set, refer to Diagnostic Trouble Code (DTC) List - Vehicle .
2. Perform the Control Solenoid Valve and Transmission Control Module Assembly Output Shaft Speed Input Test .

Repair Instructions

Perform the Diagnostic Repair Verification after completing the diagnostic procedure.

- Perform the Automatic Transmission Wiring Harness and Output Speed Sensor Removal and Automatic Transmission Wiring Harness and Output Speed Sensor Installation for OSS replacement.
- Control Module References for Control Solenoid Valve Assembly and Transmission Control Module Assembly replacement, programming, and setup.

&#169© Copyright Chevrolet. All rights reserved

DTC P2534 or P2535

Diagnostic Instructions

- Perform the Diagnostic System Check - Vehicle prior to using this diagnostic procedure.
- Review Strategy Based Diagnosis for an overview of the diagnostic approach.
- Diagnostic Procedure Instructions provides an overview of each diagnostic category.

DTC Descriptor

DTC P2534: Ignition 1 Switch Circuit Low Voltage

DTC P2535: Ignition 1 Switch Circuit High Voltage

Diagnostic Fault Information

Circuit	Short to Ground	Open/High Resistance	Short to Voltage	Signal Performance
Ignition Voltage	P2534	P2535	P2535	P2534

Typical Scan Tool Data

Ignition Voltage

Circuit	Short to Ground	Open/High Resistance	Short to Voltage
Operating Conditions: Key ON ***Parameter Normal Range:*** 8-18 volts			
IGN	0 volts	0 volts	B+

Circuit/System Description

The transmission control module (TCM) samples the system voltage on the Ignition 1 voltage circuit every 0.1 seconds. higher or lower than normal voltage may cause erratic transmission operation.

Conditions for Running the DTC

The transmission control module is communicating on the serial data circuits.

Conditions for Setting the DTC

The transmission control module detects less than 2 volts on the ignition voltage circuit at the transmission control module for greater than 10 seconds.

Action Taken When the DTC Sets

- DTCs P2534 and P2535 are Type A DTCs.
- The transmission control module turns OFF all solenoids.
- The transmission control module commands maximum line pressure.
- The transmission control module freezes transmission adaptive functions.

Conditions for Clearing the DTC

DTCs P2534 and P2535 are Type A DTCs.

Diagnostic Aids

- Verify the control solenoid valve assembly X1 connector and harness terminals are clean and not damaged.
- Verify the charging system is functioning correctly.

Reference Information

Schematic Reference

Automatic Transmission Controls Schematics

Connector End View Reference

Component Connector End Views

Electrical Information Reference

- Circuit Testing
- Connector Repairs
- Testing for Intermittent Conditions and Poor Connections
- Wiring Repairs

DTC Type Reference

Powertrain Diagnostic Trouble Code (DTC) Type Definitions

Circuit/System Testing

1. Vehicle OFF, disconnect control solenoid valve assembly X1 connector.
2. Vehicle ON, test for 8-18V between the Q8 control solenoid valve assembly X1 connector ignition voltage circuit terminal 13 and ground.
   If not within the specified range, test the ignition voltage circuit for a short to ground or an open/high resistance. If the circuit tests normal replace the Q8 control solenoid valve assembly.

Repair Instructions

Perform the Diagnostic Repair Verification after completing the diagnostic procedure.

Control Module References for Control Solenoid Valve Assembly and Transmission Control Module Assembly replacement, programming, and setup.

&#169© Copyright Chevrolet. All rights reserved

DTC P2537

Diagnostic Instructions

- Perform the Diagnostic System Check - Vehicle prior to using this diagnostic procedure.
- Review Strategy Based Diagnosis for an overview of the diagnostic approach.
- Diagnostic Procedure Instructions provides an overview of each diagnostic category.

DTC Descriptor

DTC P2537: Ignition Accessory Switch Circuit Low Voltage

Diagnostic Fault Information

Circuit	Short to Ground	Open/High Resistance	Short to Voltage	Signal Performance
Ignition Voltage	P2537	--	--	P2534

Typical Scan Tool Data

Accessory Voltage

Circuit	Short to Ground	Open/High Resistance	Short to Voltage
Operating Conditions: Key ON ***Parameter Normal Range:*** 8-18 volts			
Accessory	0 volts	0 volts	B+

Circuit/System Description

The transmission control module (TCM) samples the system voltage on the accessory voltage circuit every 0.1 seconds. Higher or lower than normal voltage may cause erratic transmission operation.

Conditions for Running the DTC

The transmission control module is communicating on the serial data circuits.

Conditions for Setting the DTC

The transmission control module detects less than 2 volts on the ignition voltage circuit at the transmission control module for greater than 10 seconds.

Action Taken When the DTC Sets

- P2537 is a Type A DTC.
- The transmission control module turns OFF all solenoids.
- The transmission control module commands maximum line pressure.
- The transmission control module freezes transmission adaptive functions.

Conditions for Clearing the DTC

P2537 is a Type A DTC.

Diagnostic Aids

- Verify the Q8 control solenoid valve assembly X1 connector and harness terminals are clean and not damaged.
- Verify the charging system is functioning correctly.

Reference Information

Schematic Reference

Automatic Transmission Controls Schematics

Connector End View Reference

Component Connector End Views

Electrical Information Reference

- Circuit Testing
- Connector Repairs

- Testing for Intermittent Conditions and Poor Connections
- Wiring Repairs

DTC Type Reference

Powertrain Diagnostic Trouble Code (DTC) Type Definitions

Circuit/System Testing

1. Vehicle OFF, disconnect Q8 control solenoid assembly X1 connector.
2. Vehicle ON, test for 8-18V between the Q8 control solenoid valve assembly X1 connector ignition voltage circuit terminal 15 and ground.
   If not within the specified range, test the accessory voltage circuit for a short to ground or an open/high resistance. If the circuit tests normal replace the Q8 control solenoid valve assembly.

Repair Instructions

Perform the Diagnostic Repair Verification after completing the diagnostic procedure.

Control Module References for Control Solenoid Valve Assembly and Transmission Control Module Assembly replacement, programming, and setup.

&#169© Copyright Chevrolet. All rights reserved

DTC P2714 or P2715

Diagnostic Instructions

- Perform the Diagnostic System Check - Vehicle prior to using this diagnostic procedure.
- Review Strategy Based Diagnosis for an overview of the diagnostic approach.
- Diagnostic Procedure Instructions provides an overview of each diagnostic category.

DTC Descriptors

DTC P2714: Pressure Control Solenoid 4 - Stuck Off

DTC P2715: Pressure Control Solenoid 4 - Stuck On

Circuit/System Description

The clutch pressure control solenoid 4 is part of the control solenoid valve assembly and is not serviced separately. The transmission control module supplies 12 volts to the clutch pressure control solenoid 4 through the high side driver 1 circuit. The transmission control module controls the clutch pressure control solenoid 4 through the clutch pressure control solenoid 4 control circuit. The normally low clutch pressure control solenoid 4 flows fluid to the 1-3 and reverse clutch when commanded ON and exhausts fluid when commanded OFF. The clutch pressure control solenoid 4 regulates the transmission fluid pressure to the 1-3 and reverse clutch.

Conditions for Running the DTC

- Shift solenoid valve 1 is not in a transition state.
- The transmission line pressure is greater than 325 kPa (47 psi).
- Propulsion system is active.

P2714

The clutch pressure control solenoid 4 commanded pressure is greater than 1800 kPa (261 psi) for 5 seconds.

P2715

The clutch pressure control solenoid 4 commanded pressure is less than 5 kPa (1 psi) for 5 seconds.

Conditions for Setting the DTC

P2714 - Condition 1

The clutch pressure control solenoid 4 commanded pressure is 1800 kPa (261 psi) and the transmission fluid pressure switch 4 state is Low for 30 seconds.

P2714 - Condition 2

The clutch pressure control solenoid 4 commanded pressure is 1800 kPa (261 psi) and the transmission fluid pressure switch 4 state is Low for 2 seconds greater than 5 times during a key cycle.

P2715 - Condition 1

The clutch pressure control solenoid 4 commanded pressure is 5 kPa (1 psi) and the transmission fluid pressure switch 4 state is High for 36 seconds.

P2715 - Condition 2

The clutch pressure control solenoid 4 commanded pressure is 5 kPa (1 psi) and the transmission fluid pressure switch 4 state is High for 2 seconds greater than 5 times during a key cycle.

Action Taken When the DTC Sets

- P2714 and P2715 are Type B DTCs.
- The transmission control module commands 450 kPa (65 psi) line pressure.
- The transmission control module freezes transmission adaptive functions.
- The driver information centre may display ENGINE NOT AVAILABLE SERVICE SOON.

Conditions for Clearing the DIC/DTC

P2714 and P2715 are Type B DTCs.

Diagnostic Aids

When attempting to set transmission performance DTCs, observe the Freeze Frame and Failure Records to assist in duplicating the failure conditions.

Reference Information

DTC Type Reference

Powertrain Diagnostic Trouble Code (DTC) Type Definitions

Scan Tool Reference

Control Module References for scan tool information.

Special Tools

DT-47825 Control Solenoid Test Plate

Circuit/System Verification

1. Perform the Transmission Fluid Level and Condition Check to verify correct fluid level.
2. Perform the Line Pressure Check to verify correct oil pressure.
3. Perform the Control Solenoid Valve and Transmission Control Module Assembly Inspection to verify control solenoid valve assembly condition.
4. Perform the Control Solenoid Valve and Transmission Control Module Assembly Solenoid Performance Test to verify control solenoid valve assembly function.
5. Inspect the control valve upper body assembly for sticking valves, damage, scored bores, or debris. Refer to Control Valve Body Diagnostic Inspection .
   If there is cause for concern in the valve body, repair or replace the valve body as necessary.

Component Testing

- Perform the Control Solenoid Valve and Transmission Control Module Assembly Inspection .
- Perform the Control Solenoid Valve and Transmission Control Module Assembly Solenoid Performance Test .

Repair Instructions

Perform the Diagnostic Repair Verification after completing the diagnostic procedure.

Verify P07A7, P079C, P0AB9 do not set after repair.

- Control Valve Body Diagnostic Inspection
- Control Valve Body Cover Removal
- Control Valve Body Replacement for control valve body replacement.
- Control Module References for Control Solenoid Valve Assembly and Transmission Control Module Assembly replacement, programming, and setup.

&#169© Copyright Chevrolet. All rights reserved

DTC P2719-P2721

Diagnostic Instructions

- Perform the Diagnostic System Check - Vehicle prior to using this diagnostic procedure.
- Review Strategy Based Diagnosis for an overview of the diagnostic approach.
- Diagnostic Procedure Instructions provides an overview of each diagnostic category.

DTC Descriptors

DTC P2719: Pressure Control Solenoid 4 System Performance

DTC P2720: Pressure Control Solenoid 4 Control Circuit Low Voltage

DTC P2721: Pressure Control Solenoid 4 Control Circuit High Voltage

Diagnostic Fault Information

Circuit	Short to Ground	Open/High Resistance	Short to Voltage	Signal Performance
Clutch Pressure Control Solenoid 4 Control	P2720	P2721	P2721	P2719

Circuit/System Description

The transmission control module supplies 12 volts to the clutch pressure control solenoid 4 through the high side driver 1 circuit. The transmission control module controls the clutch pressure control solenoid 4 through the clutch pressure control solenoid 4 control circuit. The normally low clutch pressure control solenoid 4 directs fluid flow to the 1-3 reverse clutch, or cools motor 1 depending on shift solenoid 1 position, when commanded ON and exhausts fluid when commanded OFF. The clutch pressure control solenoid 4 regulates the transmission fluid pressure to the 1-3 reverse clutch. The clutch pressure control solenoid 4 is part of the control solenoid valve assembly and is not serviced separately.

Conditions for Running the DTC

- The propulsion system is active.

- The system voltage is 11-16 V.

Conditions for Setting the DTC

P2719

The transmission control module detects an internal electrical performance malfunction of the clutch pressure control solenoid 4 control circuit for 1 second.

P2720

The transmission control module detects an internal low voltage electrical malfunction of the clutch pressure control solenoid 4 control circuit for 1 second.

P2721

The transmission control module detects an internal high voltage electrical malfunction of the clutch pressure control solenoid 4 control circuit for 1 second.

Action Taken When the DTC Sets

- P2719 is a Type B DTC.
- P2720 and P2721 are Type A DTCs.

Conditions for Clearing the DTC

- P2719 is a Type B DTC.
- P2720 and P2721 are Type A DTCs.

Diagnostic Aids

When this fault is present the system waits for a performance or clutch slip DTC to set.

Reference Information

Schematic Reference

Automatic Transmission Controls Schematics

Connector End View Reference

Component Connector End Views

Electrical Information Reference

- Circuit Testing
- Connector Repairs
- Testing for Intermittent Conditions and Poor Connections
- Wiring Repairs

DTC Type Reference

Powertrain Diagnostic Trouble Code (DTC) Type Definitions

Scan Tool Reference

Control Module References for scan tool information

Circuit/System Verification

1. Vehicle ON, verify the transmission fluid temperature is between 50-80°C (122-176°F).
2. Drive the vehicle, observe the scan tool Pressure Control Solenoid Valve 4 Test Status parameters. The reading should display OK.
   If the reading is not within the specified range, replace the Q8 control solenoid valve assembly.

Repair Instructions

Perform the Diagnostic Repair Verification after completing the diagnostic procedure.

Control Module References for Control Solenoid Valve Assembly and Transmission Control Module Assembly replacement, programming, and setup.

&#169© Copyright Chevrolet. All rights reserved

DTC P2728-P2730

Diagnostic Instructions

- Perform the Diagnostic System Check - Vehicle prior to using this diagnostic procedure.
- Review Strategy Based Diagnosis for an overview of the diagnostic approach.
- Diagnostic Procedure Instructions provides an overview of each diagnostic category.

DTC Descriptor

DTC P2728: Pressure Control Solenoid 5 System Performance

DTC P2729: Pressure Control Solenoid 5 Control Circuit Low Voltage

DTC P2730: Pressure Control Solenoid 5 Control Circuit High Voltage

Diagnostic Fault Information

Circuit	Short to Ground	Open/High Resistance	Short to Voltage	Signal Performance
Clutch Pressure Control Solenoid 5 Control	P2729	P2730	P2730	P2728

Circuit/System Description

The clutch pressure control solenoid 5 is part of the control solenoid valve assembly and is not serviced separately. The transmission control module supplies 12 volts to the pressure control solenoid 5 through the high side driver 1 circuit. The transmission control module controls the pressure control solenoid 5 through the pressure control solenoid 5 control circuit. The normally low pressure control solenoid 5 directs fluid flow to the damper clutch when commanded ON and exhausts fluid when commanded OFF. The clutch pressure control solenoid 5 regulates to the damper clutch during auto start/stop transitions.

Conditions for Running the DTC

- The propulsion system is active.
- The system voltage is 11-16 V.

Conditions for Setting the DTC

P2728

The transmission control module detects an internal electrical performance malfunction of the clutch pressure control solenoid 5 control circuit for 5 seconds.

P2729

The transmission control module detects an internal low voltage electrical malfunction of the clutch pressure control solenoid 5 control circuit for 1 second.

P2730

The transmission control module detects an internal high voltage electrical malfunction of the clutch pressure control solenoid 5 control circuit for 1 second.

Action Taken When the DTC Sets

- DTC P2728 is a Type B DTC.
- DTCs P2729 and P2730 are Type A DTCs.

Conditions for Clearing the DTC

- DTC P2728 is a Type B DTC.
- DTCs P2729 and P2730 are Type A DTCs.

Reference Information

Schematic Reference

Automatic Transmission Controls Schematics

Connector End View Reference

Component Connector End Views

Electrical Information Reference

- Circuit Testing
- Connector Repairs

- Testing for Intermittent Conditions and Poor Connections
- Wiring Repairs

DTC Type Reference

Powertrain Diagnostic Trouble Code (DTC) Type Definitions

Scan Tool Reference

Control Module References for scan tool information

Circuit/System Verification

1. Vehicle ON, verify the transmission fluid temperature is between 50-80°C (122-176°F).
2. Drive the vehicle, observe the scan tool Pressure Control Solenoid Valve 5 Performance Test Status parameters. The reading should display OK.
   If the reading is not within the specified range, replace the Q8 control solenoid valve assembly.

Repair Instructions

Perform the Diagnostic Repair Verification after completing the diagnostic procedure.

Control Module References for Control Solenoid Valve Assembly and Transmission Control Module Assembly replacement, programming, and setup.

&#169© Copyright Chevrolet. All rights reserved

Symptoms - Automatic Transmission

Note: Use the symptom tables only if the following conditions are met:

- Refer to Diagnostic Starting Point - Vehicle .
- There are no DTCs set.
- The control modules can communicate via the serial data link.
- Review the system operation in order to familiarise yourself with the system functions. Refer to Transmission General Description and Transmission Component and System Description .

Visual/Physical Inspection

Inspect the easily accessible or visible system components for obvious damage or conditions which could cause the symptom.

Intermittent

Faulty electrical connections or wiring may be the cause of intermittent conditions. Refer to Testing for Intermittent Conditions and Poor Connections .

Symptom List

Refer to a symptom diagnostic procedure from the following list in order to diagnose the symptom:

- Fluid Diagnosis
  - Transmission Fluid Level and Condition Check
  - Fluid Leak Diagnosis
- Noise and Vibration Diagnosis
  - Whine/Growl Noise That Changes with Vehicle Speed
  - Noise in Drive or Reverse Gear
  - Vibration
  - Noise and Vibration Analysis
- Range Performance Diagnosis
  - No Park or Drive

- No Drive in All Ranges
- No Reverse Gear
- No Drive or Reverse Gear

- Shift Quality Feel Diagnosis
  - Harsh Garage Shift
  - Harsh, Soft, Delayed or Slipping Drive or Reverse Gear
- Shift Pattern
  - No Drive in All Ranges
  - No Drive or Reverse Gear
  - Stuck in Drive or Reverse Gear
- Symptoms Not Found or No Symptom Detected
  - Transmission Fluid Level and Condition Check
  - Line Pressure Check
  - Road Test
  - Clutch Plate Diagnosis
  - Engine Coolant/Water in Transmission
  - Case Porosity Repair
  - Bushing and Mating Shaft Inspection

&#169© Copyright Chevrolet. All rights reserved

Drive Motor Generator Power Inverter Module Cable Inspection

Danger: Always perform the High Voltage Disabling procedure prior to servicing any High Voltage component or connection. Personal Protection Equipment (PPE) and proper procedures must be followed.

The High Voltage Disabling procedure will perform the following tasks:

- Identify how to disable high voltage.
- Identify how to test for the presence of high voltage.
- Identify condition under which high voltage is always present and personal protection equipment (PPE) and proper procedures must be followed.

Failure to follow the procedures exactly as written may result in serious injury or death.

Note: This procedure is for inspection and repair of the 3 phase high voltage cable outer sheathing only.

Visual/Physical Inspection

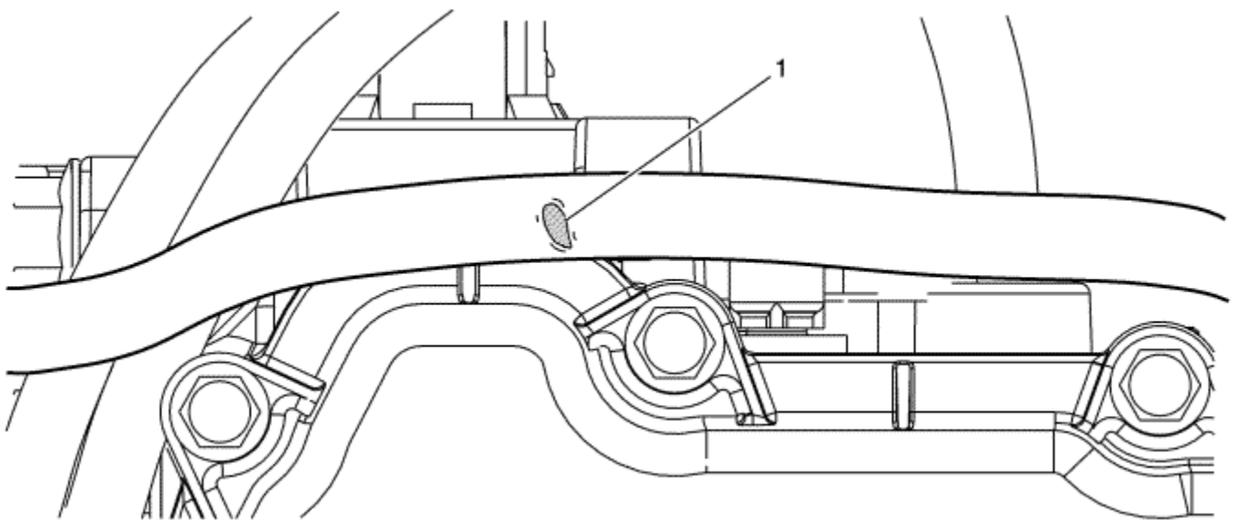

Cable Construction

- Outer Jacket or Sheathing
- Braided Shield
- Insulated Conductor
- 3 Individual Cables per Cable Assembly (Motor A or Motor B)

1. Disconnect or remove the drive motor with generator control module cover to gain better visibility of 3 phase cables.
2. Determine if the exposure is limited to the braided shield or has penetrated to the insulated conductor.
3. If the conductor wire is exposed, the cable assembly should be replaced.

   Note: If the 3 phase cable drive motor with generator control module connector is removed a new seal must be used.

4. Examine the cables for abrasion or damage. It may be necessary to disconnect the 3 phase cable from the drive motor with generator control module (TPIM) (1 bolt per connector) for proper examination.
5. If exposure is limited to the braided shield, the cable can be repaired using the instructions in this procedure.
6. If the damage (1) is within 100 mm of the end gate clamp on the cable then the cable should be replaced.
7. If the damage (1) is more than 25 mm in length then the cable should be replaced.
8. An example of a cable that can be repaired is shown above.

Cable Repair Process

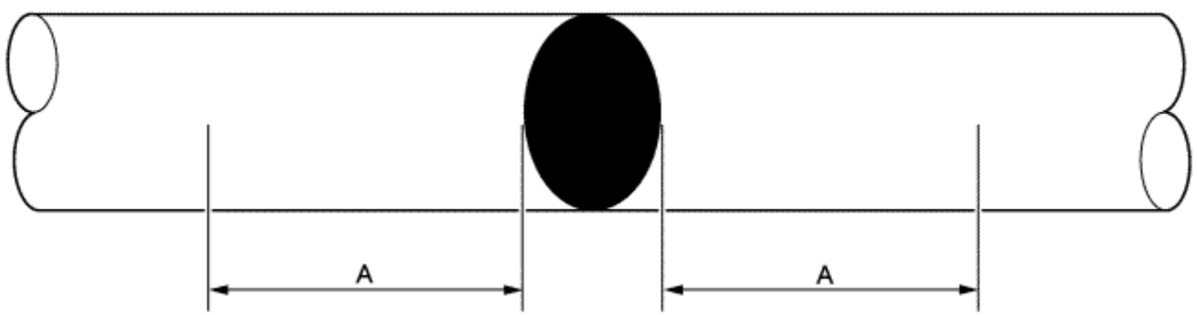

Note: This procedure requires the use of Self-fusing Silicone Repair Tape.

1. If abrasion or damage is evident on the outer sheathing and a repair can be made please follow the procedure below closely.
2. Clean the cable area on either side of the abrasion or damage approximately 6 inches.
3. Before beginning to tape the cable, you must cut the Silicone Repair Tape to the length you expect to use.
4. You must also remove the Silicone Repair Tape from the backing material.

   Note: Tape is pulled to half of it's original width during entire application (Very Important).

5. Wrap tape around cable twice while stretching tape.
6. Wrap tape along cable.
   6.1. Begin to spiral the tape along cable - Be sure to stretch tape while spiralling along cable.
   6.2. Tape must be overlapped on itself so that there are always 2 tape layers on cable.
7. Finish applying tape by ending spiral and then wrap the tape twice on itself (like step 5) and tear or cut remaining tape and smooth onto itself.
8. The Silicone Rescue Tape must wrap the cable to provide 1.25 in (A) of coverage from edge of damage on each side of the abrasion or damaged area.

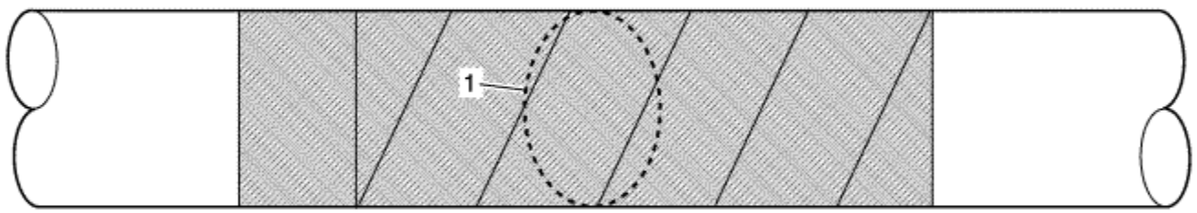

9. You can see above the abrasion or damage "spot (1)" covered by Silicone Rescue Tape.
10. If connector/s to TPIM were removed install with new seal and torque to **9.5 N·m +/-- 1.5 N·m (84 lb in +/-- 1 1/2 lb in)**.
11. Install drive motor with generator control module cover.

&#169© Copyright Chevrolet. All rights reserved

Control Solenoid Valve and Transmission Control Module Assembly Inspection

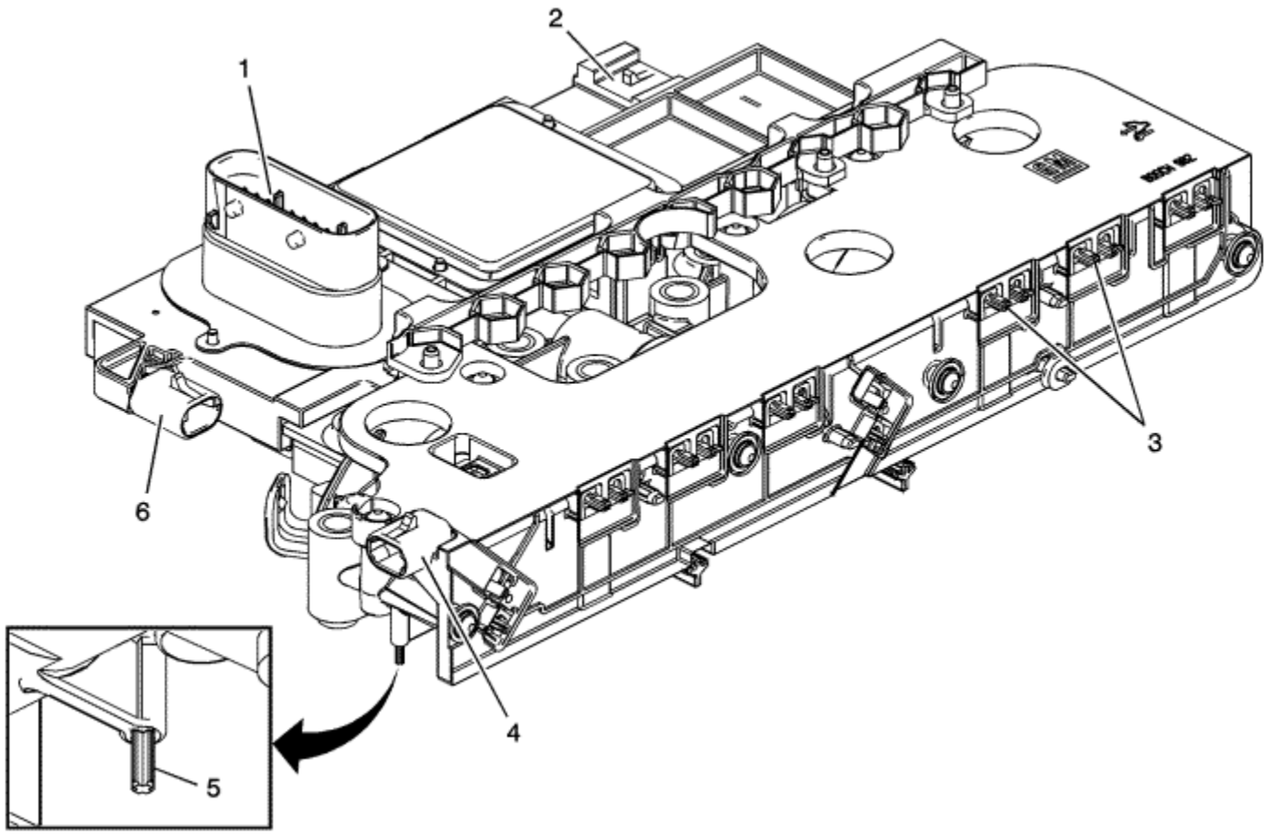

1. Inspect the control solenoid valve assembly connectors and pins (1, 2, 4, 6) for the following conditions:
   - Damage
   - Bent pins
   - Debris
   - Broken retaining tab

- Contamination

2. Ensure no metallic debris is inside the connectors near the terminal pins.
3. Inspect the control solenoid valve assembly solenoid leads (3) for contamination or metallic debris.
4. Inspect the 4 control solenoid valve assembly filter plate retaining tabs (5) for cracks and ensure proper tension when filter plate is attached.

&#169© Copyright Chevrolet. All rights reserved

Control Solenoid Valve and Transmission Control Module Assembly Output Shaft Speed Input Test

Special Tools

EL 38522 Variable Signal Generator

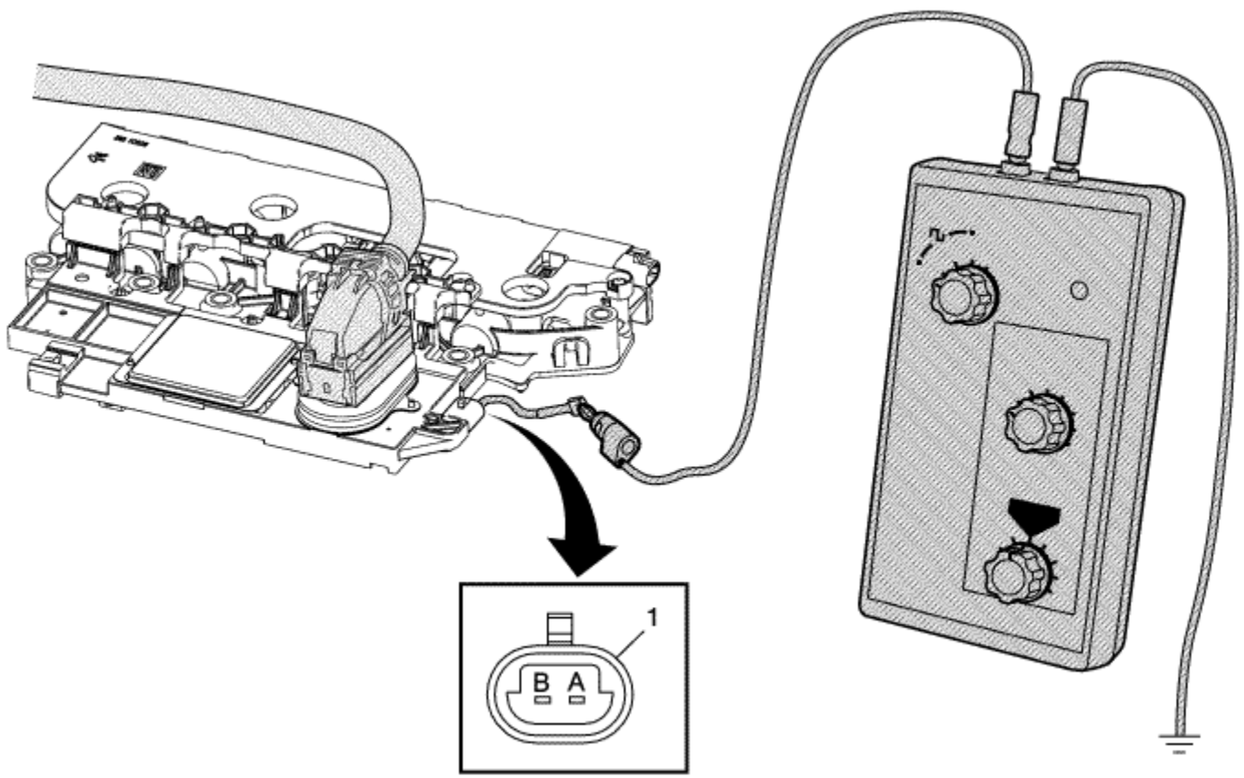

The purpose of this test is to provide a simulated output speed sensor signal to the control solenoid valve assembly Transmission Output Shaft Speed Sensor input circuits in order to verify the control solenoid valve assembly is able to process the output speed sensor signal.

1. Vehicle OFF, remove the control valve body cover. Refer to Control Valve Body Cover Removal .
2. Connect the Q8 control solenoid valve assembly X1 harness connector.
3. Vehicle OFF, disconnect the OSS wiring harness connector X4 (1) from the Q8 control solenoid valve assembly.
4. Vehicle ON, test for 8.3-9.3 volts at terminal A and ground.
   If not within the specified range, replace the Q8 control solenoid valve assembly.
5. Vehicle OFF, using the *EL 35616* terminal test kit , connect the *EL 38522* variable signal generator red lead to the OSS signal circuit terminal B on the TCM.
6. Connect the black lead from the *EL 38522* variable signal alternator to ground.
7. Set the *EL 38522* variable signal alternator to 8 volts, the frequency to 120 Hz, and the percent duty cycle to 50 or the normal position.
8. Vehicle ON, verify with a scan tool the Transmission OSS parameter is between 375-400 RPM.
   If not within the specified range, replace the Q8 control solenoid valve assembly. Refer to Control Solenoid Valve and Transmission Control Module Assembly Replacement .
9. Test the output speed sensor harness for an open circuit, short to ground or short to voltage.
   If all circuits test normal, test or replace the B14A Transmission Output Shaft Speed Sensor.

Repair Instructions

Perform the Diagnostic Repair Verification after completing the diagnostic procedure.

- Perform the Automatic Transmission Wiring Harness and Output Speed Sensor Removal and Automatic Transmission Wiring Harness and Output Speed Sensor Installation for OSS replacement.
- Control Module References for Control Solenoid Valve Assembly and Transmission Control Module Assembly replacement, programming, and setup.

&#169© Copyright Chevrolet. All rights reserved

Control Solenoid Valve and Transmission Control Module Assembly Solenoid Performance Test

Table 1: Control Solenoid Valve Assembly Solenoid Performance Test Block to Component Identification

Special Tools

- *DT-47825* Control Solenoid Test Kit
- *DT-47825-20* Adaptor Harness

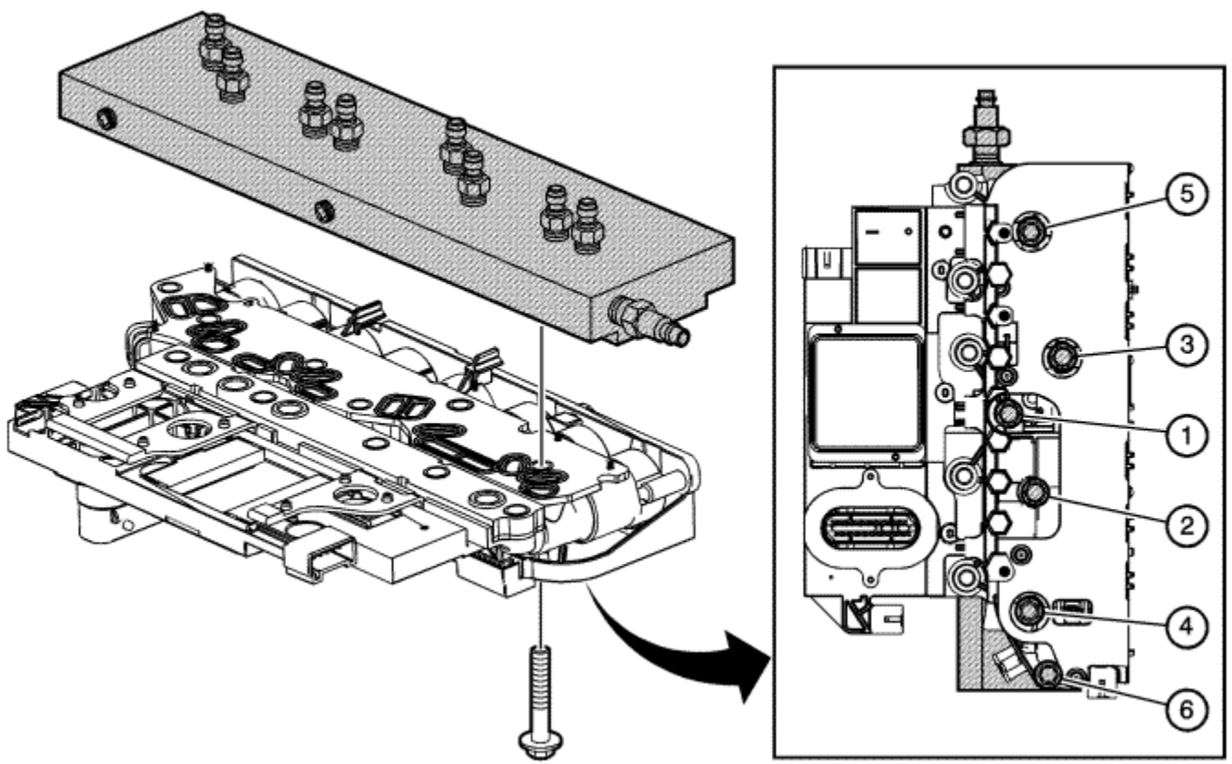

The purpose of this procedure is to test the control solenoid valve assembly solenoids for a stuck open or stuck closed condition, or a faulty transmission fluid pressure switch. *DT-47825* test block is bolted to the control solenoid valve assembly on the valve body mounting surface. Pressurised air is passed into the aluminium test block, through the control solenoid valve assembly solenoid passage and back to the outlet port on the test block. A scan tool is used to command the solenoids ON and OFF. While observing the airflow, one can check the valve function. The recommended shop air pressure for this test is regulated to 90-100 psi.

Preliminary Procedures

1. Raise and support the vehicle. Refer to Lifting and Jacking the Vehicle .
2. Remove the control solenoid valve assembly from the transmission. Refer to Control Solenoid Valve and Transmission Control Module Assembly Removal .
3. Perform the Control Solenoid Valve and Transmission Control Module Assembly Inspection procedure.

Solenoid Testing Procedure

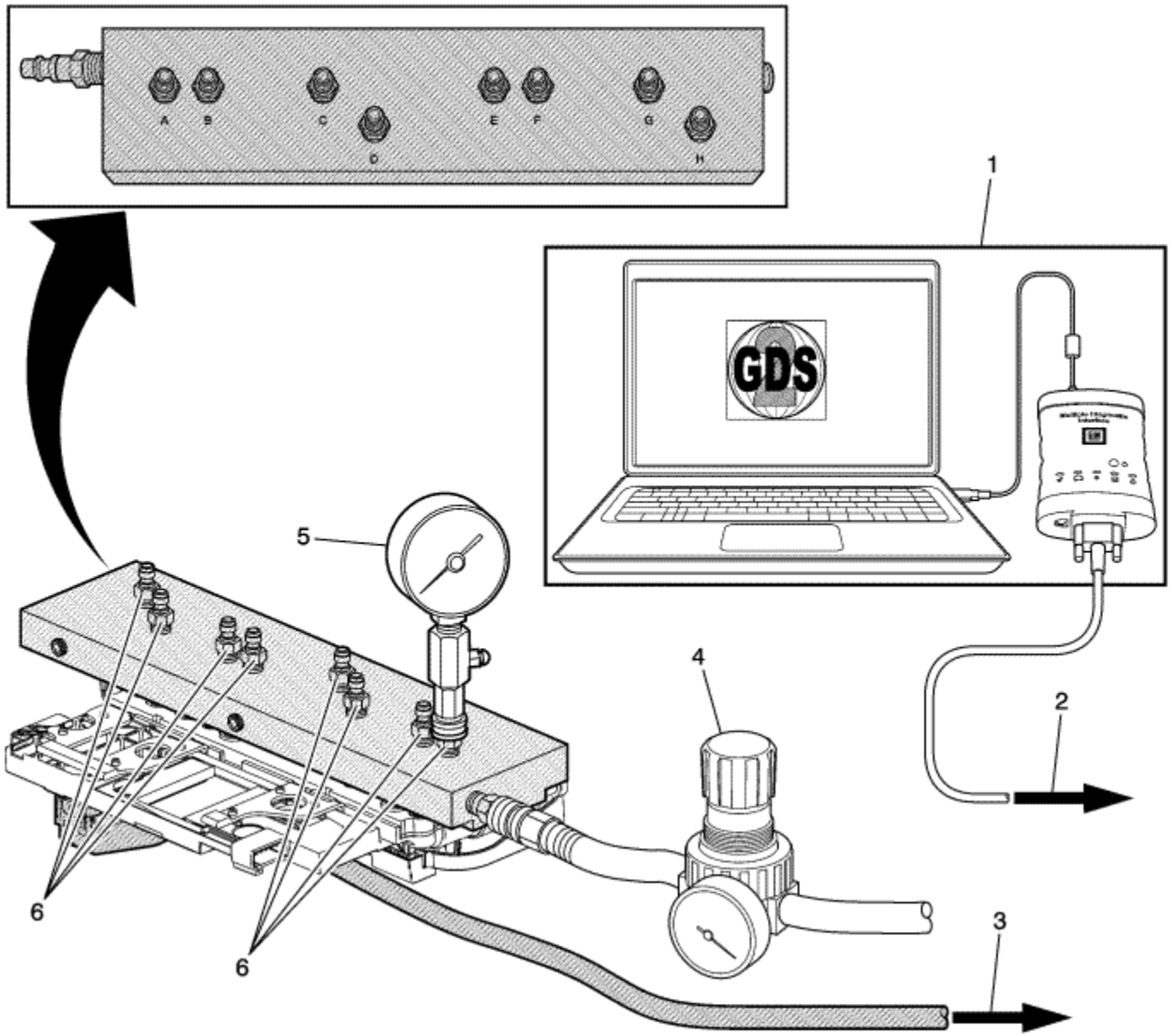

Caution: To avoid solenoid overheating and possible internal damage, do not continuously operate the solenoid for more than 2 minutes at a time. Drain the TCM of excess transmission fluid before attaching to test block and use caution when attaching air to test block air inlet.

Note: With the Vehicle in Service Mode and the engine OFF, the transmission control module will normally cycle some of the transmission solenoids On and Off to facilitate keeping the ports and solenoids clean and free of debris. This dither function is a normal activity and will cause the valves to cycle open and closed quickly when the TCM is powered up. This may cause some air to exit the ports where the pressure gauge is not connected as those solenoids cycle on and off.

1. Connect the *DT-47825-20* adaptor harness to the vehicle harness (3) and the control solenoid valve assembly.

2. If necessary, clean each side of the filter plate assembly and install the filter plate assembly back on the control solenoid valve assembly. Clean the mounting surface of the *DT-47825* test block .
3. Bolt the *DT-47825* test block to the control solenoid valve assembly mounting surface. Use the bolts and washers supplied with the tool to attach the test block. Tighten the bolts to **5 N·m (44 lb in)**.
4. Connect the *DT-47825-20* adaptor harness supplied with the *DT-47825* test kit to the vehicle harness and to the Q8 control solenoid valve assembly. Engage the connector locks.
5. Vehicle in Service Mode.
6. Cover the *DT-47825* test block ports (6) with a shop towel. Transmission fluid may exit these ports when the solenoids are commanded ON.
7. Connect regulated shop air (4) to the *DT-47825* test block air inlet. Do not exceed the recommended air pressure of 620.5-689.4 kPa (90-100 psi).
8. Vehicle in Service Mode and the scan tool (1) connected to the DLC connector (2) communicating with the vehicle, command the solenoid in question ON and OFF. Observe the airflow at the appropriate test port for a change as you command the solenoid. Refer to Control Solenoid Valve Assembly Solenoid Performance Test Block to Component Identification for correct solenoid function and test block port connections for the solenoid being tested.
9. The solenoid should allow air pressure to flow or prevent air pressure flow depending on the solenoid state. The test results are read on the pressure gauge (5).
10. Command the solenoid valve ON and OFF several times to determine the condition of the solenoid in question. Release the test air pressure from the pressure the gauge between solenoid tests.

Control Solenoid Valve Assembly Solenoid Performance Test Block to Component Identification

Commanded State	Port On Test Block	Expected Result
Vehicle OFF, no solenoids commanded and TCM not communicating	A, C, G	Air Flow
Vehicle in Service Mode, no solenoids commanded and TCM communicating	A, B, C, D, E, F, G, H	No air flow from any port and no control solenoid valve assembly air leaks. This may take up to 30 seconds after vehicle is On.
Shift Solenoid 1	D	Air Flow
Shift Solenoid 2	H	Air Flow
Pressure Control Solenoid 2	C	Air Flow
Pressure Control Solenoid 3	G	Air Flow
Pressure Control Solenoid 4	B	Air Flow
Pressure Control Solenoid 5 -- Command On	E	Air Flow
Line Pressure Control Solenoid -- Command Increase/Decrease	A	0 kPa = 0 psi 36.6 kPa = 20-30 psi 52.5 kPa = 32-56 psi 71.2 kPa = 44-74 psi 90 kPa = 70-90 psi

		108 kPa = 90-100+psi Greater than 108 kPa = Scan tool displays Device Control Not Allowed

Control Solenoid Valve Assembly

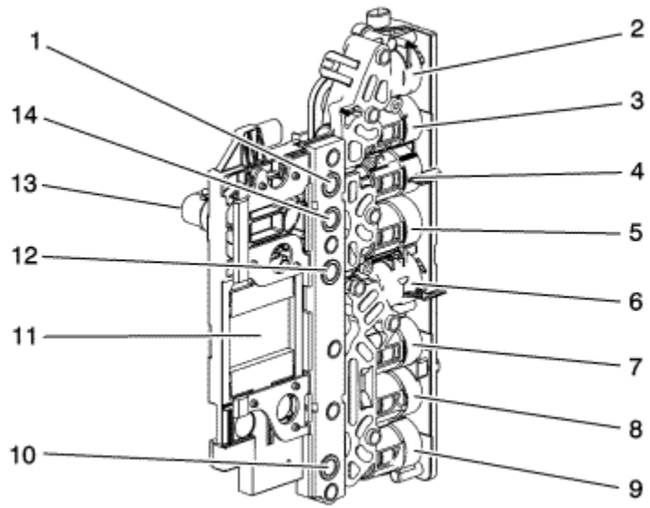

Callout	Component Name	DTC/Symptom Associated with Component
1	Transmission Fluid Pressure Switch 4	P0756, P0757
2	Shift Solenoid 2	P0756, P0757, P0976, P0977, Possible Engine Unavailable
3	Pressure Control Solenoid 3	P0796, P0797, P079A, P07A3, P0969, P0970, P0971
4	Pressure Control Solenoid 6 -- Not Used	No DTCs or symptoms associated with this component
5	Pressure Control Solenoid 5	P2728, P2729, P2730, Bump during engine start/stop transition
6	Shift Solenoid 1	P0751, P0752, P0973, P0974, Possible Engine Unavailable
7	Pressure Control Solenoid 2	P0776, P0777, P079B, P07A5, P0965, P0966, P0967
8	Pressure Control Solenoid 4	P079C, P07A7, P2714, P2715, P2719, P2720, P2721
9	Line Pressure Control Solenoid	P0961, P0962, P0963
10	Transmission Fluid Pressure Switch 1	P0751, P0752, P2714, P2715
11	Transmission Control Module	P0601-P0606, P060B, P062F, P0634, P0667, P0668, P0669, P06AC, P06AD, P06AE, P16F3, P16F7, P16F8, P179B
12	Transmission Fluid Pressure Switch 3	P0751, P0752, P0776, P0777
13	X1 20 Pin Connector	P2534, P2535
14	Transmission Fluid Pressure Switch 5	P0796, P0797

Transmission Fluid Pressure Switch Test Procedure

1. Remove the *DT-47825* test block from the Q8 control solenoid valve assembly.
2. With the Vehicle in Service Mode and the scan tool communicating with the vehicle, using a soft blunt object, depress each transmission fluid pressure switch port. The corresponding transmission fluid pressure switch parameter on the scan tool display should display HI when depressed and Low when released.

   If the Q8 control solenoid valve assembly fails any of the above tests, replace the Q8 control solenoid valve assembly.

   If the Q8 control solenoid valve assembly passes the above tests, the problem is internal to the transmission.

Repair Instructions

Perform the Diagnostic Repair Verification after completing the diagnostic procedure.

Control Module References for Control Solenoid Valve Assembly and Transmission Control Module replacement, programming, and setup.

&#169© Copyright Chevrolet. All rights reserved

Control Valve Body Diagnostic Inspection

The purpose of this inspection procedure is to determine if the control valve body assembly is the cause of a transmission DTC or symptom. The table will assist you in identifying which component within the control valve body is associated with a particular DTC or symptom. The components within the control valve body are not serviced separately.

Component Testing

Warning: Valve springs can be tightly compressed. Use care when removing retainers and plugs. Personal injury could result.

Caution: After cleaning the transmission components, allow to air dry. Do not use cloth or paper towels in order to dry any transmission components. Lint from the towels can cause component failure.

Caution: Do not reuse cleaning solvents. Previously used solvents may deposit sediment which may damage the component.

1. Remove the control valve body assembly . Refer to Control Valve Body Replacement .
2. Clean and inspect all control valve body assembly components for the following conditions listed below:
   - Stuck or scored control valve
   - Scored or damaged control valve body bore
   - Broken, weak, or damaged control valve return spring
   - Missing, damaged, or stuck check ball
   - Missing, restricted, or out of position modulated fluid pressure orifice
   - Missing or damaged control valve retainer
   - Debris or sediment

     If a condition is found, and cannot be repaired by cleaning, replace the control valve body assembly.

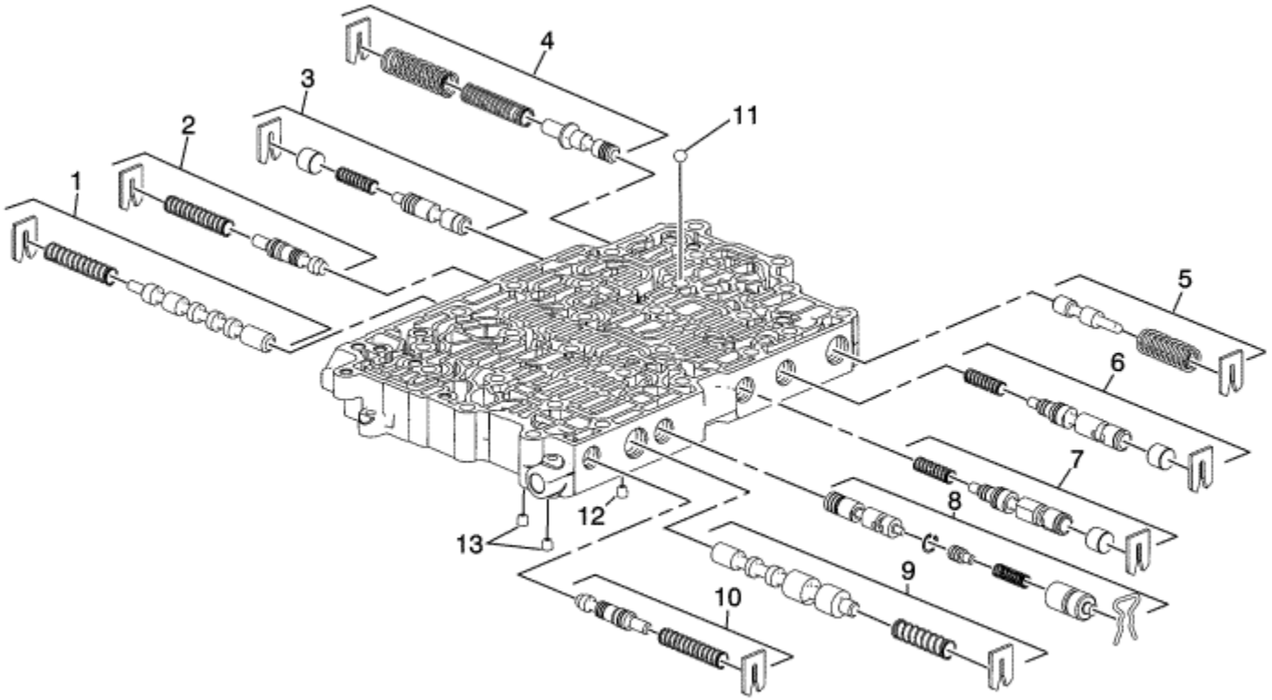

Callout	Component Name	DTC/Symptom Associated with Component
1	Shift Solenoid Valve Train	P0751, P0752, Possible Engine Unavailable
2	Variable Hi and 2-3-4 Clutch and Drive Motor/Generator Stator Cooling Regulator Boost Valve Train	P0776, P0777, P079B
3	A/Trans Torque Damper Bypass Clutch Valve Train	Bump during engine start/stop transition
4	Actuator Feed Limit Valve Train	High or low line pressure, P079A, P079B, P079C
5	Cooler Feed Limit Valve Train	P0634, Transmission Overheating
6	1-3 Reverse Clutch and Generator/Drive Motor Stator Cooling Regulator Valve Train	P2714, P2715, P07A7, P079C
7	Variable Hi and 2-3-4 Clutch and Drive Motor/Generator Stator Cooling Regulator Valve Train	P0776, P0777, P07A5, P079B
8	Variable Low and 1-2 Reverse and 4th Clutch and Drive Motor/Generator Stator Cooling Regulator Valve Train	P0796, P0797, P07A3, P079A
9	Shift Solenoid Valve Train	P0756, P0757
10	1-2 Reverse and 4th Clutch Regulator Boost Valve Train	P0796, P0797, P079A
11	Control Valve Body Ball Check Valve	P2714, P2715, P079C
12	Modulated Fluid Pressure Orifice	High or low line pressure
13	Modulated Fluid Pressure Orifice	High or low line pressure

Repair Instructions

Control Valve Body Replacement

&#169© Copyright Chevrolet. All rights reserved

Transmission Fluid Level and Condition Check

1. Ensure vehicle is off.
2. Remove oil fill cap on top of transmission.

   Note: The vehicles hood must be open or engine will NOT start.

3. Start vehicle.
4. Idle engine in Park (P) for 5 minutes (to ensure damper is full).
5. Move PRND to Park (P) and wait for transmission to heat up to **40-60 °C (104-140 °F)**.
6. Move PRND through Neutral (N), Drive (D), Park (P) and Reverse (R) 2 times.
7. Move PRND to Park (P).
8. Remove oil setting plug.
9. Allow oil to drain until it becomes a slow drip. If no oil drains add **.5 L (.52 qt)** until oil drips slowly from plug.
10. Reinstall oil setting plug.
11. Turn vehicle off.
12. Reinstall oil fill cap.
13. Grand total oil approximately **8.9 L (9.4 qt)**.

PROCEED WITH OIL FILL PROCEDURE IN ACCORDANCE WITH ALL HYBRID SAFETY MEASURES.

Fluid Condition Inspection

- Inspect the fluid colour. The fluid should be red in colour. The fluid may also turn brown form normal use, and does not always indicate contamination.

  Note: Fluid that is very dark or black and has a burnt odour usually indicates contamination or overheating.

- If the fluid colour is very dark or black and has a burnt odour, inspect the fluid for excessive metal particles or other debris which may indicate transmission damage. Refer to Road Test to verify transmission operation. Change the transmission fluid if no other conditions are found.
- Fluid that is cloudy or milky or appears to be contaminated with water indicates engine coolant or water contamination. Refer to Engine Coolant/Water in Transmission .

&#169© Copyright Chevrolet. All rights reserved

Line Pressure Check

Special Tools

EN 21867-A Pressure Gauge

For equivalent regional tools refer to Special Tools

Main Line Pressure Check

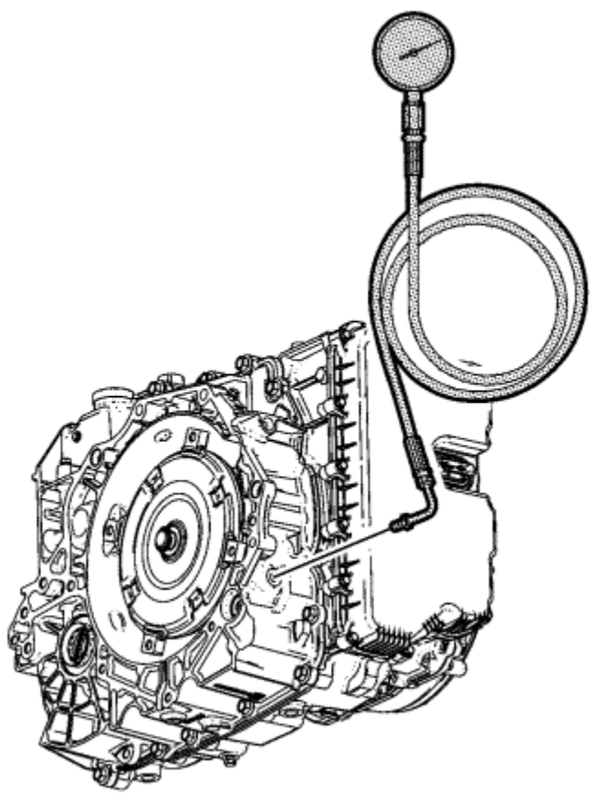

Warning: Keep the brakes applied at all times in order to prevent unexpected vehicle motion. Personal injury may result if the vehicle moves unexpectedly.

1. Install a scan tool.

   Note: Depending on the hybrid/EV battery state of charge the engine may not start. To start or keep the engine running open the hood.

2. Start the engine.
3. If the engine will not start, refer to Engine Cranks But Does Not Run .
4. Inspect the transmission for the proper fluid level. Refer to Transmission Fluid Level and Condition Check .
5. Inspect the manual linkage at the transmission for proper function.
6. Turn the engine OFF.

   Warning: When the transmission is at operating temperatures, take necessary precautions when removing the auxiliary pump pressure test hole plug, to avoid being burned by the catalytic converter.

   Note: You may need to remove or disconnect components in order to gain access to the transmission line pressure test hole plug.

7. Remove the line pressure test hole plug.
8. Install the *EN 21867-A* pressure gauge .
9. Access the Scan Tool Transmission Output Controls for the Line Pressure Control Solenoid.
10. Start the engine.

    Note: In order to achieve accurate line pressure readings, the following procedure must be performed at least 3 times in order to gather uniform pressure readings. Also if you do not have the hood open the engine may go in to AutoStop.

    The scan tool is only able to control the line Pressure Control solenoid in PARK and NEUTRAL with engine speeds below 1500 RPM. This protects the clutches from extreme high or low line pressures.

11. Use the scan tool to increase and decrease the Line Pressure Control Solenoid in increments of approximately 100 kPa (15 psi). The scan tool commands the increment values automatically.
12. Allow the pressure to stabilise between increments.
13. Compare your pressure readings on the scan tool to those indicated on the *EN 21867-A* pressure gauge . Refer to Solenoid Valve Pressure Specifications .
14. If the pressure readings vary greatly, refer to Main Fluid Pump Pressure High or Low

Auxiliary Transmission Fluid Pump Line Pressure Check

1. Close the hood and wait for the engine to shut off.
2. Use the scan tool to increase and decrease the line pressure control solenoid in increments of approximately 100 kPa (15 psi). The scan tool commands the increment values automatically.
3. Allow the pressure to stabilise between increments.
4. Compare your pressure readings on the scan tool to those indicated on the *EN 21867-A* pressure gauge . Refer to Solenoid Valve Pressure Specifications .
5. If the pressure readings vary greatly, refer to Auxiliary Fluid Pump Pressure High or Low .

6. Turn the engine OFF.
7. Remove the *EN 21867-A* pressure gauge .

   Caution: Refer to Fastener Caution in the Preface section.

8. Install the pressure test hole plug. Tighten the pressure plug to **11 N·m (97 lb in)**.

© Copyright Chevrolet. All rights reserved

Road Test

Note: The Road Test Procedure should be performed only as part of the Symptom Diagnosis. Refer to Symptoms - Automatic Transmission .

The following test provides a method of evaluating the condition of the automatic transmission. The test is structured for two most common driving conditions, which are Electrically Variable Engine Off and Electrically Variable Engine On. The test is structured so that most driving conditions would be achieved. The test is divided into the following parts:

- Electrical Function Check
- Torque Control
- Part Throttle Torque Control
- Coasting

Note: Complete the test in the sequence given. Incomplete testing cannot guarantee an accurate evaluation.

Before the road test, ensure the following:

- The engine is performing properly.
- Transmission fluid level is correct. Refer to Transmission Fluid Level and Condition Check .
- Tire pressure is correct.

During the road test:

- Perform the test only when traffic conditions permit.
- Operate the vehicle in a controlled, safe manner.
- Observe all traffic regulations.
- View the scan tool data while conducting this test.
  Take along qualified help in order to operate the vehicle safely.
- Observe any unusual sounds or smells.

After the road test, check the following:

- Inspect for proper transmission fluid level. Refer to Transmission Fluid Level and Condition Check .
- Inspect for any diagnostic trouble codes (DTCs) that may have set during the testing. Refer to the applicable DTC.
- Monitor the scan tool data for any abnormal readings or data.

- Inspect for fluid leaks. Refer to Fluid Leak Diagnosis .

Electrical Function Check

Perform this procedure first in order to ensure the electronic transmission components are functioning properly. If these components are not checked, a simple electrical condition could be misdiagnosed.

1. Connect the scan tool.
2. Ensure the gear selector is in PARK and set the parking brake.
3. Start the engine. To ensure the engine starts open the hood.

   Note: Note that the engine may not start depending on the state of charge in the battery. For more information refer to Hybrid Modes of Operation Description .

4. Verify that the following scan tool data can be obtained and is functioning properly.

   Refer to Transmission Control Module Scan Tool Information for typical data values. Data that is questionable may indicate cause for concern.

   - Engine Torque
   - Drvr Axle Torque Request
   - Calc. Throttle Position
   - Engine Speed
   - Calc. Trans Input Speed
   - Transmission OSS
   - ISS/OSS Supply Voltage
   - Replicated OSS CKT Status
   - Vehicle Speed
   - Output Shaft Direction
   - Variable Low 1-2R Clutch Slip
   - Variable High 2-3-4 Clutch Slip
   - 4th Clutch Slip
   - 1-3R Clutch Slip
   - Variable Low 1-2R Clutch Status
   - Variable High 2-3-4 Clutch Status
   - 4th Clutch Status
   - 1-3R Clutch Status
   - IAT

- Brake Switch
- Shift Solenoid 1
- Shift Solenoid 2
- Commanded Gear
- Gear Ratio
- Driver Shift Control
- Driver Shift Request
- IMS A/B/C/P
- IMS
- TFP Switch 1
- TFP Switch 3
- TFP Switch 4
- TFP Switch 5
- ECT
- Trans. Fluid Temp.
- TCM Power Up Temperature
- TCM Temperature
- PC Sol. 2 Pressure Cmd.
- PC Sol. 3 Pressure Cmd.
- PC Sol. 4 Pressure Cmd.
- PC Sol. 5 Pressure Cmd.
- Line PC Sol. Pressure Cmd.
- Engine Run Time
- EC Ignition Relay Feedback Signal
- Ignition Voltage
- Transfer Case Ratio

5. Check the garage shifts.
   5.1. Apply the brake pedal and ensure the handbrake is set.
   5.2. Move the gear selector through the following ranges:
      5.2.1. PARK to REVERSE
      5.2.2. REVERSE to NEUTRAL
      5.2.3. NEUTRAL to DRIVE

5.3. Pause 2 to 3 seconds in each gear position.
5.4. Verify the gear engagements are immediate and not harsh.

Note: These shifts can not be felt when trans is functioning properly.

Note: Harsh engagement may be caused by any of the following conditions:

- High engine idle speed-Compare engine idle speed to desired idle speed.
- Commanded low pressure control (PC) solenoid current--Investigate PC Sol. Pressure Cmd. kPa (psi) for all solenoids. High pressure will cause harsh shifts.
- A default condition caused by certain DTCs that result in maximum line pressure to prevent clutch slippage.

Note: Soft or delayed engagement may be caused by any of the following conditions:

- Low idle speed--Compare engine idle speed to desired idle speed
- Low fluid level
- Commanded high PC solenoid current--Investigate PC Sol. Pressure Cmd. kPa (psi) for all solenoids. Low pressure will cause soft or delayed shifts
- Cold transmission fluid temperature (TFT)--Use the scan tool to determine TFT
- Selector linkage--Inspect and adjust as necessary

6. Monitor transmission range on the scan tool, trans data list.
   6.1. Apply the brake pedal and ensure the handbrake is set.
   6.2. Move the gear selector through all ranges.
   6.3. Pause 2 to 3 seconds in each range.
   6.4. Return gear selector to PARK.
   6.5. Verify that all selector positions match the scan tool display.
7. Check throttle position input.
   7.1. Apply the brake pedal and ensure the handbrake is set.
   7.2. Ensure the gear selector is in PARK.
   7.3. Monitor the scan tool Calc. Throttle Position while increasing and decreasing engine speed with the throttle pedal. The scan tool Calc. Throttle Position percentage should increase and decrease with engine speed.

If any of the above checks do not perform properly, record the result for reference after completion of the road test.

Torque Control

The TCM calculates the ratio points based primarily on 2 inputs: throttle position and vehicle speed.

Note: If in the above steps you opened the hood to start the engine make sure it is closed before driving the vehicle.

Perform the following steps:

1. Choose a throttle position of 12.5 percent or 25 percent. All throttle positions shown should be tested to cover the normal driving range.
2. Monitor the following scan tool parameters:
   - Calc. Throttle Position
   - Vehicle Speed
   - Engine Speed
   - Transmission OSS
   - Commanded Gear
   - TFP Switch 1
   - TFP Switch 3
   - TFP Switch 4
   - TFP Switch 5
   - PC Sol. 2 Pressure Cmd.
   - PC Sol. 3 Pressure Cmd.
   - PC Sol. 4 Pressure Cmd.
   - PC Sol. 5 Pressure Cmd.
   - Shift Solenoid 1 and 2
3. Place the gear selector in the DRIVE position.
4. Accelerate the vehicle using the chosen throttle position. Hold the throttle steady.
5. As the vehicle accelerates, there should be a noticeable shift feel. The vehicle should be able to accelerate to the desired throttle position or speed with no noticeable problems.

   Note any noise or vibration.

Manual Gear Range Selection

This range is used to slow the vehicle more when the driver's foot is lifted from the throttle. This range will feel like "engine braking" with the engine on or off.

Reverse

Perform the following test using a 10-15 percent throttle position.

1. With the vehicle stopped, move the gear selector to REVERSE.
2. Slowly accelerate the vehicle.
3. Verify that there is no noticeable slip, noise or vibration.

&#169© Copyright Chevrolet. All rights reserved

Clutch Plate Diagnosis

Composition Plates

Dry the plates and inspect the plates for the following conditions:

- Pitting
- Flaking
- Delamination--splitting or separation of bonded clutch material
- Wear
- Glazing
- Cracking
- Charring
- Chips or metal particles embedded in the lining

Replace a composition plate which shows any of these conditions.

Steel Plates

Wipe the plates dry and check the plates for heat discolouration. If the surfaces are smooth, even if colour smear is indicated, you can reuse the plate. If the plate is discoloured with heat spots or if the surface is scuffed, replace the plate.

Causes of Burned Clutch Plates

The following conditions can result in a burned clutch plate:

- Incorrect usage of clutch or apply plates
- Engine coolant or water in the transmission fluid
- A cracked clutch piston
- Damaged or missing seals
- Low line pressure
- Valve body conditions
  - The valve body face is not flat.

  - Porosity is between channels.
  - The valve bush clips are improperly installed.
  - The checkballs are misplaced.
- The Teflon® seal rings are worn or damaged.

&#169© Copyright Chevrolet. All rights reserved

Engine Coolant/Water in Transmission

Caution: The antifreeze or water will deteriorate the seals, gaskets and the glue that bonds the clutch material to the pressure plate. Both conditions may cause damage to the transmission.

If antifreeze or water has entered the transmission, perform the following:

1. Disassemble the transmission.
2. Replace all of the rubber type seals. The coolant will attack the seal material which will cause leakage.
3. Replace the composition-faced clutch plate assemblies. The facing material may separate from the steel centre portion.
4. Replace all of the nylon parts - washers.
5. Replace the torque converter.
6. Thoroughly clean and rebuild the transmission, using new gaskets and oil filter.
7. Flush the cooler lines after the transmission cooler has been properly repaired or replaced.

© Copyright Chevrolet. All rights reserved

Automatic Transmission Overheating

Diagnostic Instructions

- Perform the Diagnostic System Check - Vehicle prior to using this diagnostic procedure.
- Review Strategy Based Diagnosis for an overview of the diagnostic approach.
- Diagnostic Procedure Instructions provides an overview of each diagnostic category.

Diagnostic Fault Information

Cause	DTCs
Engine:	
• Engine coolant level low • Engine Overheating • Incorrect engine coolant • Old coolant or incorrect concentration level • Cooling system leak • Radiator hose kinked or pinched • Loose, missing, or damaged radiator air seals or deflector -- restricted air flow • The radiator and air conditioning condenser has air flow obstructions to include large amount of bent fins • The cooling fans do not operate • Inspect the engine mechanical for worn, leaking, cracked cylinder heads, or engine block	P1258
Transmission:	
Vehicle Overload or Beyond Capacity Towing: • Vehicle is overloaded • Vehicle is towing beyond capacity • Vehicle modifications	P0634
Heat Transfer: • Engine overheating • Cooler restrictions -- transmission fluid auxiliary cooler restricted flow or blockage	

• Restricted air flow • Vehicle modifications • Aftermarket auxiliary cooler installed incorrectly, incorrect flow direction - reversed flow • Restricted, blocked, or pinched transmission cooler lines • Stuck closed transmission thermal bypass valve	P0634
Transmission Abuse: • Vehicle overloaded • Vehicle is towing beyond capacity • Vehicle modifications	P0634
Vehicle Damage: • Transmission oil cooler pipe kinked, pinched or restricted • Restricted air flow	P0634
Transmission Fluid: • Fluid leaks • Low fluid level • Contaminated or poor transmission fluid quality	P0634
Low Fluid Pump Output: • Low fluid level • Blocked, damaged or loose filter • Pinched or restricted cooler lines • Restricted cooler - damage or debris • Inefficient pump - worn	P0634
Clutch Slippage: • Low fluid level • Low fluid pump output • Damaged or leaking clutch seals • Internal hydraulic leak • Worn clutch plate assembly	P079A P079B P079C P079D

Circuit/System Description

The primary source of heat in the 4ET50 transmission is the drive motors. The drive motors are cooled by the transmission fluid. Hot fluid exits the drive motors and flows to the transmission oil cooler through the transmission cooler supply line and thermal bypass valve. The thermal bypass valve assembly is located near the lower left side of the

radiator. The cooled fluid returns to the transmission through the transmission fluid cooler pipe assembly and cools the control solenoid assembly. The transmission fluid temperature sensor is located in the control solenoid assembly and is not serviced separately. The Transmission Fluid Temperature parameter on the scan tool should rise steadily to a normal operating temperature, and then stabilise.

The thermal bypass valve is mechanically operated, based on the oil temperature of the transmission in order to maintain optimum transmission operating efficiency. The valve has an activating temperature of 82°C (176°F), with the range to move being 78-83°C (172-181°F). The full open temperature is 96°C (205°F). The thermal bypass valve assembly begins to open at 82°C (176°F) for optimum transmission operation and fuel economy. The valve has a typical oil flow rate of 9-10 lpm (2.4-2.6 gpm).

Cold Mode:

82°C (176°F) and below the thermal bypass valve bypasses the oil going to the cooler and sends the fluid back to the transmission.

Mixing Mode:

82-96°C (176-205°F) the thermal bypass valve is in mixing mode - some of the fluid flows back to the trans and some flows through the transmission oil cooler.

Hot Mode:

Above 96°C (205°F) The thermal bypass valve is fully open and transmission oil flows through the cooler then back to the transmission.

Reference Information

Schematic Reference

- Automatic Transmission Controls Schematics
- Park Engine Off
- Park Engine On
- Fluid Passages

Description and Operation

- Transmission General Description
- Transmission Indicators and Messages

Scan Tool Reference

Control Module References for scan tool information

Special Tools

- *DT 24731* Tempil Stick
- *DT 45096* Transmission Oil Cooler System Flush and Flow Test Tool

For equivalent regional tools, refer to Special Tools .

Component Testing

1. Perform the Fluid Leak Diagnosis .
2. Verify airflow through the radiator is not obstructed. Refer to Radiator Cleaning .
3. Perform the Transmission Fluid Level and Condition Check procedure.
4. Perform the Line Pressure Check procedure.
5. Perform the Main Fluid Pump Pressure High or Low procedure.
6. Perform the Transmission Fluid Cooler Flushing and Flow Test .
7. With a hand held or infrared thermometer or *DT 24731* tempil stick , test for the transmission cooler supply line thermal bypass valve assembly opening at 96°C (205°F). The transmission cooler supply line temperature should be higher on the transmission side of the thermal bypass valve assembly than the cooler side until 96°C (205°F) is reached.
   If the thermal bypass valve test indicates that the valve has stuck closed, replace the thermal bypass valve assembly.
   If the thermal bypass valve functions correctly, inspect the transmission oil passages for a blockage.

Repair Instructions

Perform the Diagnostic Repair Verification after completing the diagnostic procedure.

- Transmission Fluid Auxiliary Cooler Replacement
- Transmission Fluid Cooler Thermal Bypass Valve Replacement
- Transmission Fluid Cooler Inlet Pipe Replacement
- Transmission Fluid Cooler Outlet Pipe Replacement

&#169© Copyright Chevrolet. All rights reserved

Case Porosity Repair

Some external leaks are caused by case porosity in non-pressurised areas. You can usually repair these leaks with the transmission in the vehicle.

1. Thoroughly clean the area to be repaired with a cleaning solvent. Air dry the area.

   Warning: Epoxy adhesive may cause skin irritations and eye damage. Read and follow all information on the container label as provided by the manufacturer.

2. Using instructions from the manufacturer, mix a sufficient amount of an epoxy to make the repair.
3. While the transmission case is still hot, apply the epoxy. You can use a clean, dry soldering acid brush to clean the area and also to apply the epoxy cement. Make certain that the area to be repaired is fully covered.
4. Allow the epoxy cement to cure for three hours before starting the engine.
5. Repeat the fluid leak diagnosis procedures.

© Copyright Chevrolet. All rights reserved

Transmission Fluid Cooler Flushing and Flow Test

GM studies indicate that plugged or restricted transmission oil coolers and pipes cause insufficient transmission lubrication and elevated operating temperatures which can lead to premature transmission failure. Many repeat repair cases could have been prevented by following published procedures for transmission oil cooler flushing and flow checking. This procedure includes flow checking and flushing the auxiliary transmission oil cooler, if equipped.

Note: Use the *DT 45096* flush and flow test tool or equivalent to flush and flow test the transmission oil cooler and the oil cooler pipes after the transaxle is removed for repairs.

Only GM Goodwrench DEXRON®VI automatic transmission fluid should be used when doing a repair on a GM transmission.

Time allowance for performing the cooler flow checking and flushing procedure has been included in the appropriate labor time guide operations since the 1987 model year. The service procedure steps for oil cooler flushing and flow testing are as follows:

Cooler Flow Check and Flushing Steps

1. Machine Set-up
2. Determine Minimum Flow Rate
3. Back Flush
4. Forward Flush
5. Flow Test
6. Code Recording Procedure
7. Clean-up

Special Tools

- *DT 45096* Transmission Oil Cooling System Flush and Flow Test Tool
- *DT 45096-50* Transmission Cooler Flush Adaptor
- *DT 45096-55* Transmission Cooler Flush Adaptor
- Shop air supply with water/oil filters, regulator and pressure gauge -- minimum 90 psi
- Eye protection
- Rubber gloves

For equivalent regional tools, refer to Special Tools .

Machine Set-up

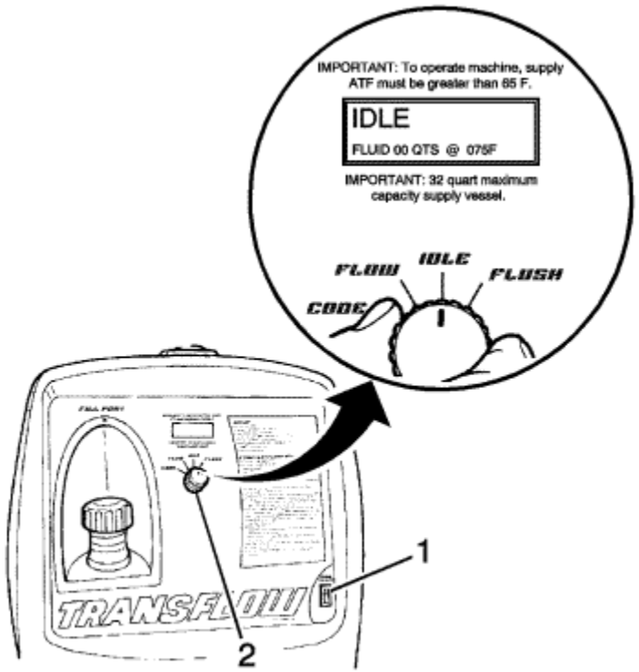

1. Verify that the main power switch (1) is in the OFF position.
2. Place the main function switch (2) in the IDLE position.

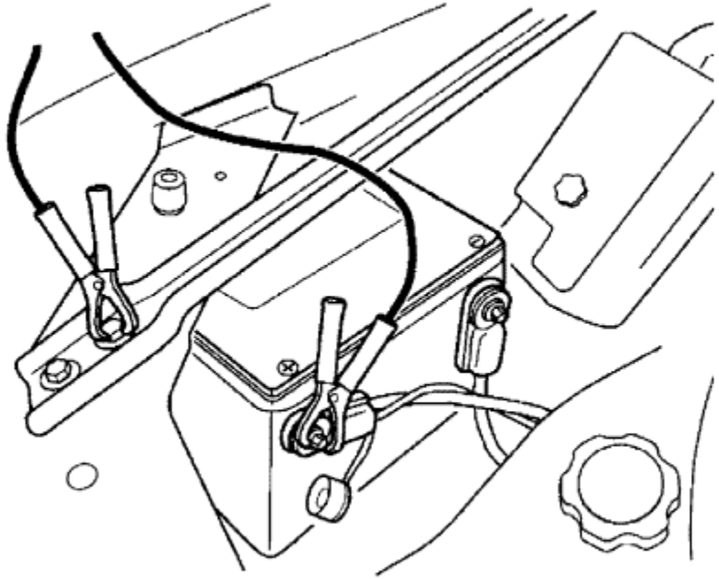

3. Connect *DT 45096* flush and flow test tool to the vehicle 12V DC power source by connecting the red battery clip to the positive, +, battery post on the vehicle and connect the negative lead to a known good chassis ground.
4. Turn the main power switch to the ON position.

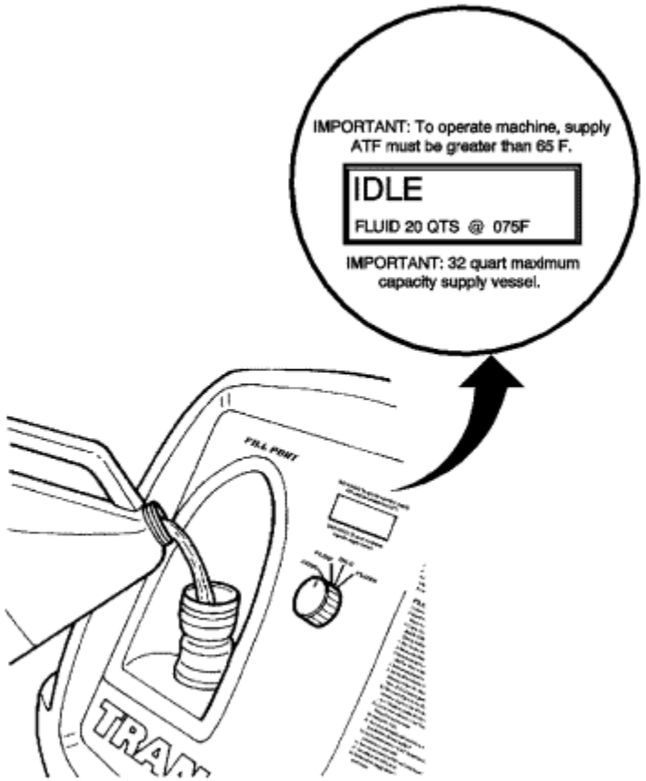

Caution: Do not overfill the supply vessel. Damage to the unit may result. To verify the fluid level, view the LCD screen display while filling the unit, to ensure the fluid level does not exceed 30 L (32 qt).

5. Fill the supply tank with Dexron®VI through the fill port.
6. Reinstall and tighten the fill cap.

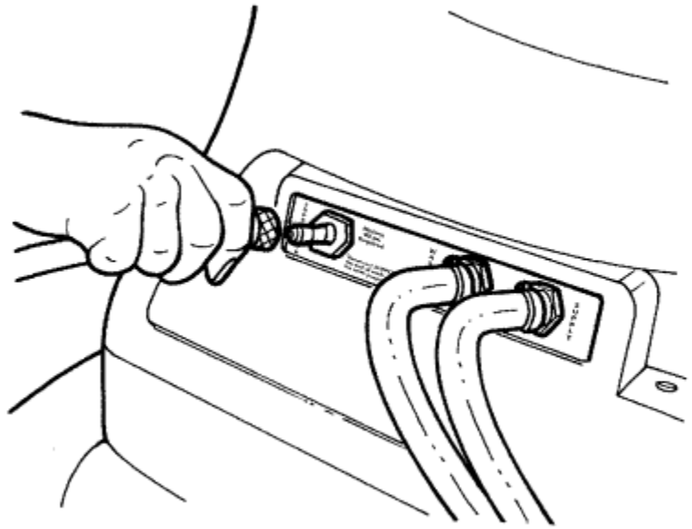

7. Connect a shop air supply hose to the quick-disconnect on the rear panel marked SUPPLY AIR.

Determine Minimum Flow Rate

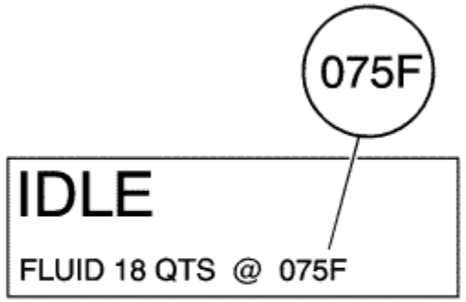

1. From the machine display, identify the temperature of the automatic transmission fluid that is stored in the supply vessel of *DT 45096* flush and flow test tool .

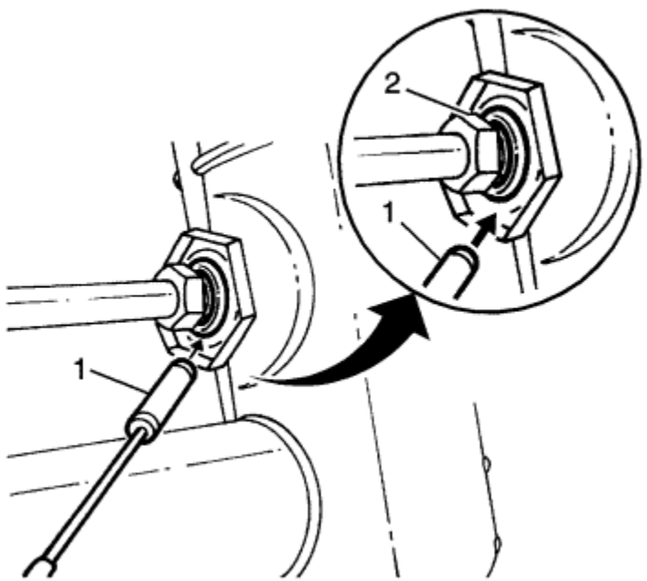

2. Determine whether the transmission oil cooler is steel or aluminium by using a magnet (1) at the cooler flange (2) at the radiator.
3. Refer to the table below. Using the temperature from step 1, locate on either the Steel MINIMUM Flow Rate table or the Aluminium MINIMUM Flow Rate table the minimum flow rate in gallons per minutes (GPM). Record the minimum flow rate in GPMs and the supply fluid temperature for further reference.

Example

- Fluid temperature: 75°F
- Cooler Type: Steel

  The MINIMUM flow rate for this example would be 0.8 GPM.

4. Inspect transmission oil cooler lines for damage or kinks that could cause restricted oil flow. Repair as needed and refer to the appropriate GM service manual procedures.

Minimum Flow Rate in Gallons Per Minute (gpm)

Temperature Range	Steel	Aluminium
65 - 66°F	0.6 gpm	0.5 gpm
67 - 70°F	0.7 gpm	0.6 gpm
71 - 75°F	0.8 gpm	0.7 gpm
76 - 80°F	0.9 gpm	0.8 gpm
81 - 84°F	1.0 gpm	0.9 gpm
85 - 89°F	1.1 gpm	1.0 gpm
90 - 94°F	1.2 gpm	1.1 gpm
95 - 98°F	1.3 gpm	1.2 gpm
99 - 103°F	1.4 gpm	1.3 gpm
104 - 108°F	1.5 gpm	1.4 gpm
109 - 112°F	1.6 gpm	1.5 gpm
113 - 117°F	1.7 gpm	1.6 gpm
118 - 120°F	1.8 gpm	1.7 gpm

Bypass Valve Removal

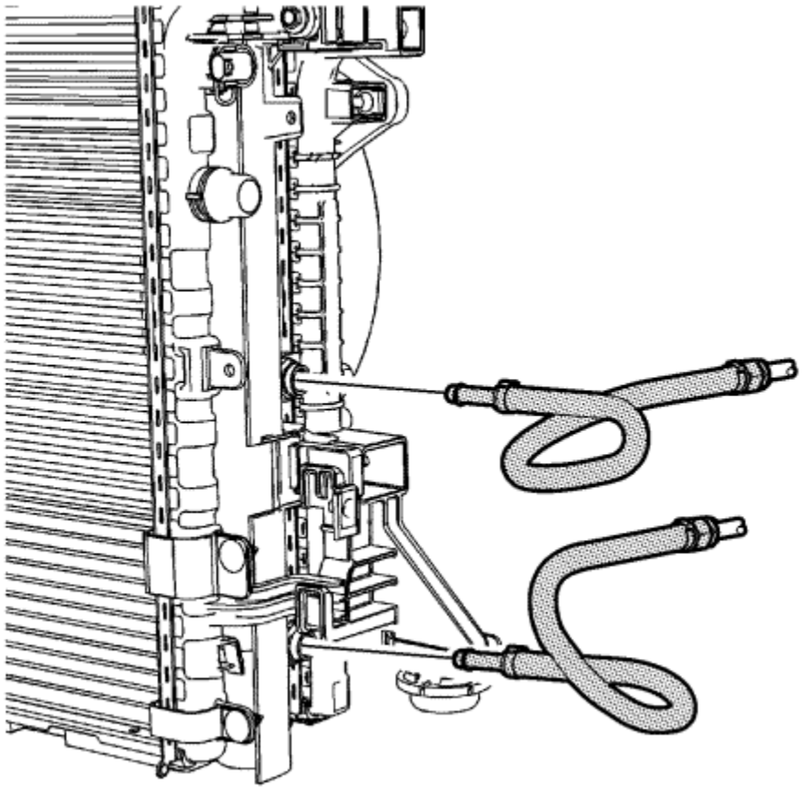

- Remove the fluid cooler bypass valve. Refer to Transmission Fluid Cooler Thermal Bypass Valve Replacement .
- Install the *DT 45096-55* cooler flush adaptor .

Back Flush Procedure

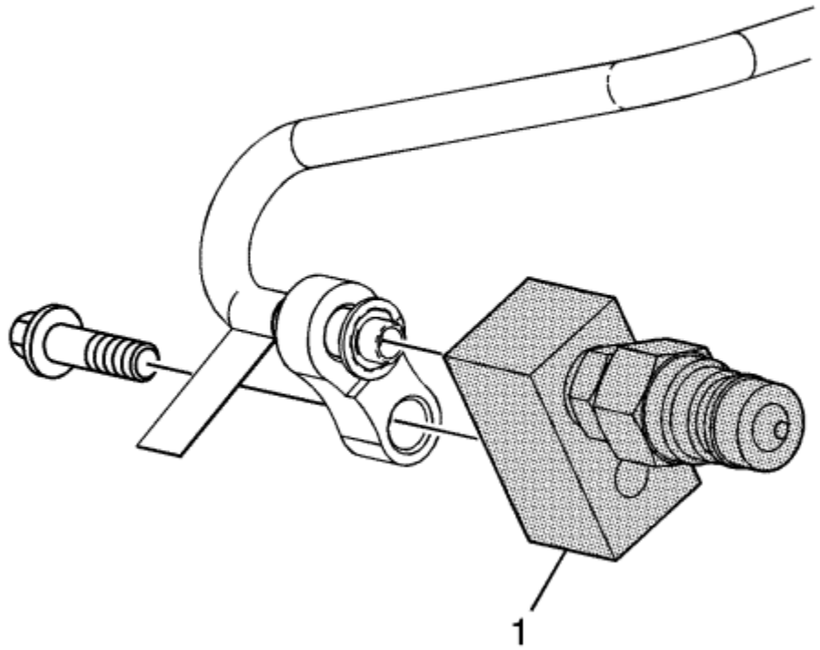

1. Connect the *DT 45096-50* flush adaptor (1) to the vehicle transmission oil cooler supply and return lines at the transmission.

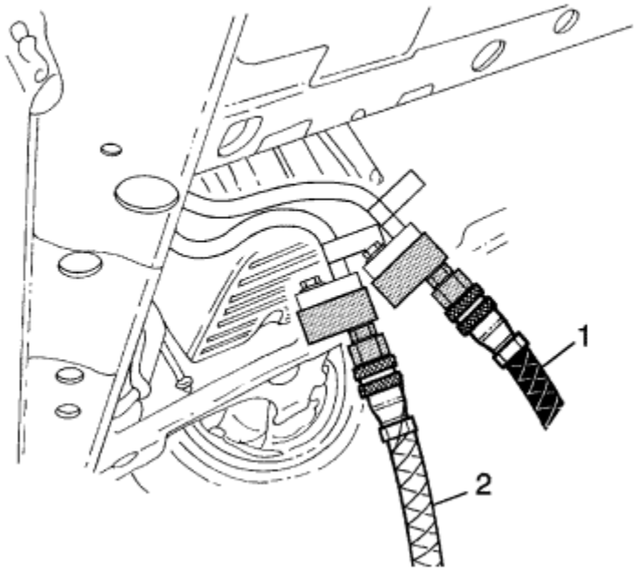

2. Connect the black supply hose (1) to the return line, top connector of the transmission, and the clear waste hose (2) to the feed line, bottom connector of the transmission, to the vehicle cooler lines. This is the reverse flow - backflush direction.

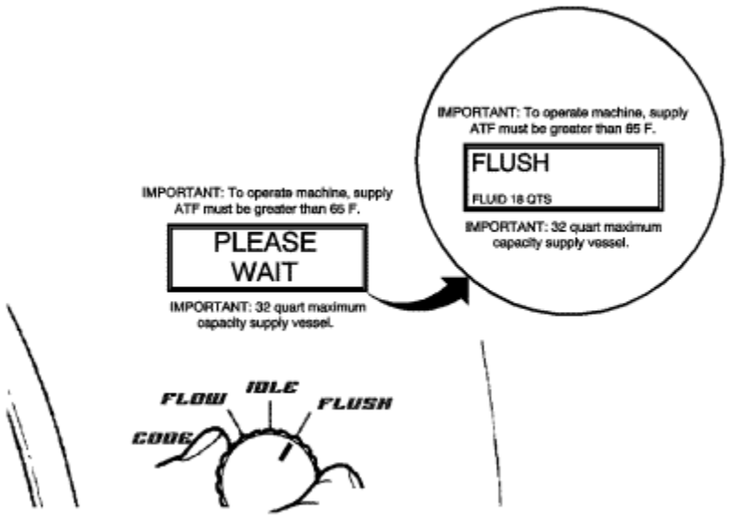

3. Turn the main function switch to the FLUSH position. Allow the machine to operate for 30 seconds.

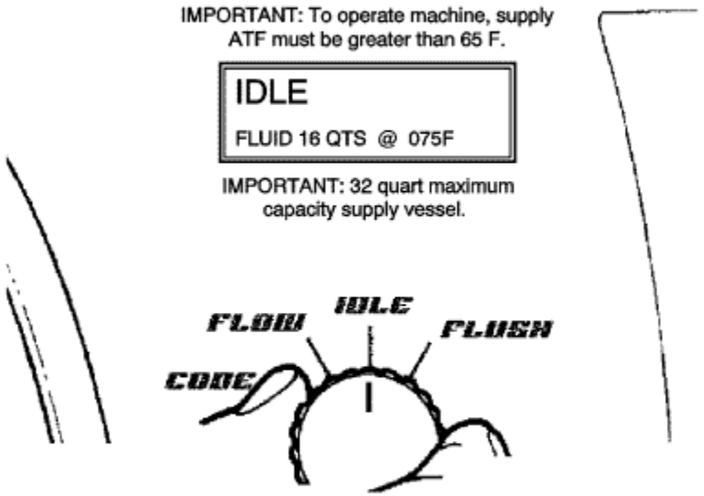

4. Turn the main function switch to the IDLE position and allow the supply vessel pressure to dissipate.

Forward Flush

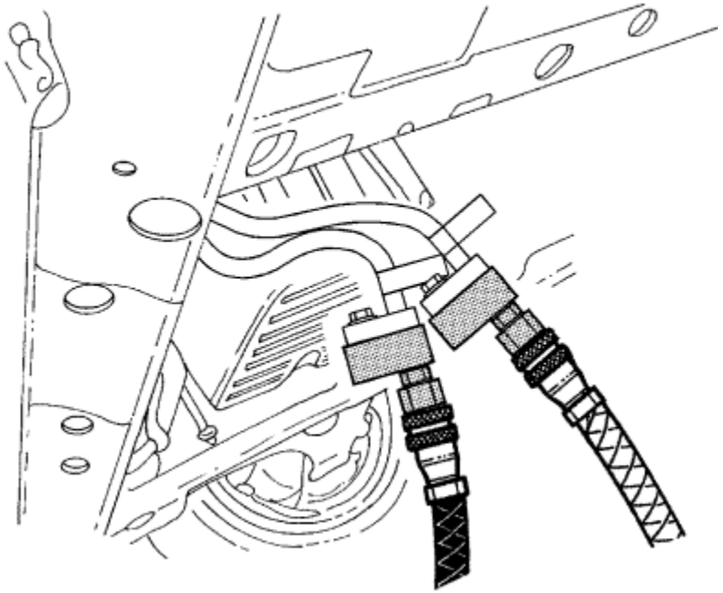

1. Disconnect the supply and waste hoses from the vehicle cooler lines. Reverse the supply and waste hoses to provide a normal flow direction.

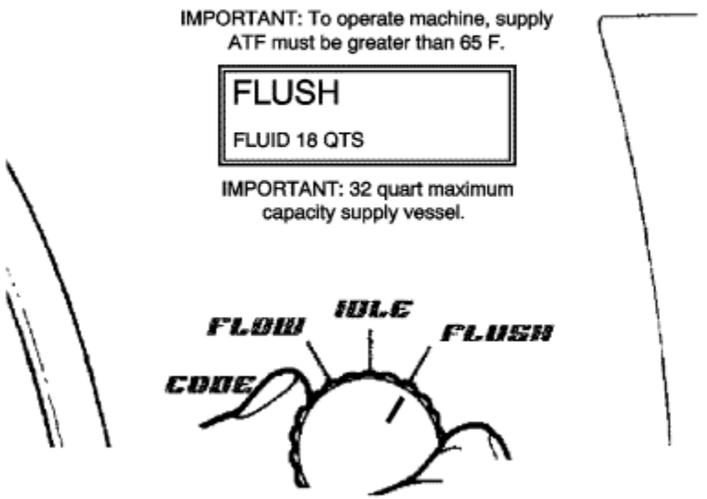

2. Turn the main function switch to the FLUSH position and allow machine to operate for 30 seconds.

Flow Test

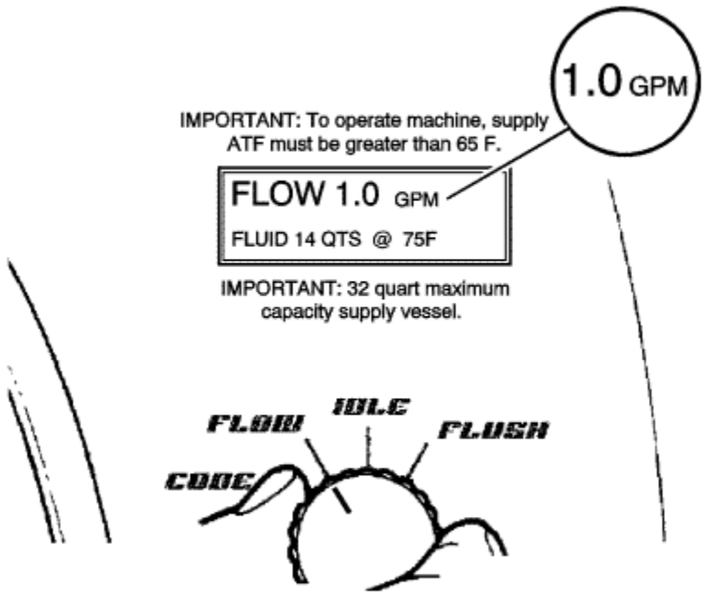

Note: If the flow rate is less than 0.5 gpm, the LCD displays an error message. Refer to the Troubleshooting section of the operation manual.

1. Turn the main function switch to the FLOW position and allow the oil to flow for 15 seconds. Observe and note the flow rate; this is the TESTED flow rate.
2. Compare the TESTED flow rate to the MINIMUM flow rate information previously recorded.
   - If the TESTED flow rate is equal to or greater than the MINIMUM flow rate recorded, the oil cooling system is functioning properly. Perform Code Recording Procedure.
   - If the TESTED flow rate is less than the MINIMUM flow rate previously recorded, repeat the back flush and forward flush procedures.
3. If the TESTED flow rate is less than the MINIMUM flow rate after the second test, perform Code Recording Procedure.
   3.1. Replace the transmission oil cooler.
   3.2. Reconnect supply and waste hoses to the cooler lines in the normal flow direction. Perform Flow Test.
   3.3. Perform Code Recording Procedure.

Code Recording Procedure

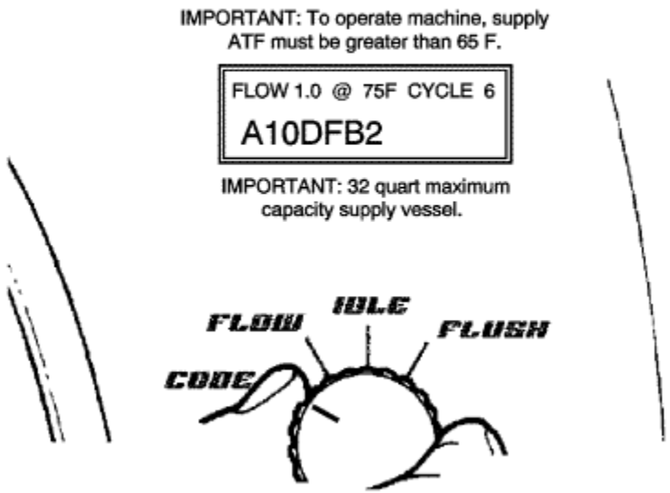

1. Turn the main function switch to the CODE position.

   Note:
   - If power is interrupted prior to the recording of the seven-character code, the code will be lost and the flow rate test will need to be repeated.
   - The flow test must run for a minimum of 8-10 seconds and be above 0.5 GPM for a code to be generated.

2. Record TESTED flow rate, temperature, cycle and seven-character flow code information on repair order.

Clean-up

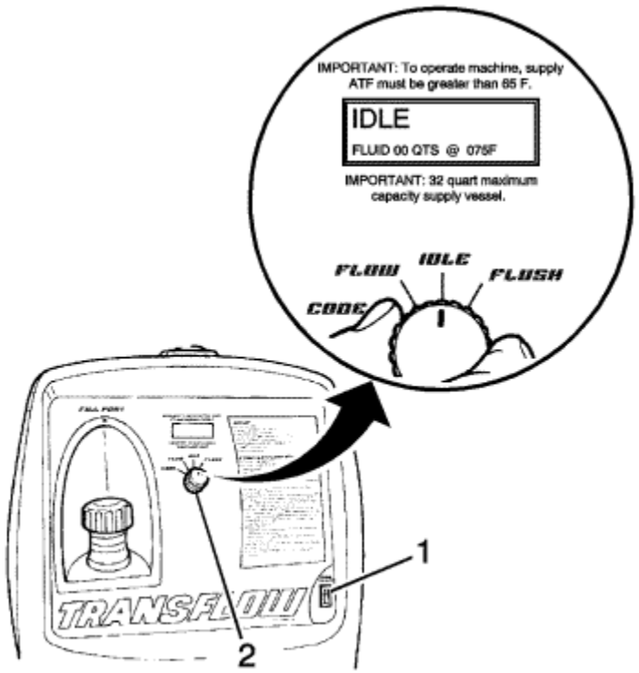

1. Turn the main function switch (2) to the IDLE position and allow the supply vessel pressure to dissipate.
2. Turn the main power switch (1) to the OFF position.

   Note: A small amount of water may drain from the bottom of the unit when the air supply is disconnected. This is a normal operation of the built-in water separator.

3. Disconnect the supply and waste hoses and the 12-volt power source from the vehicle.

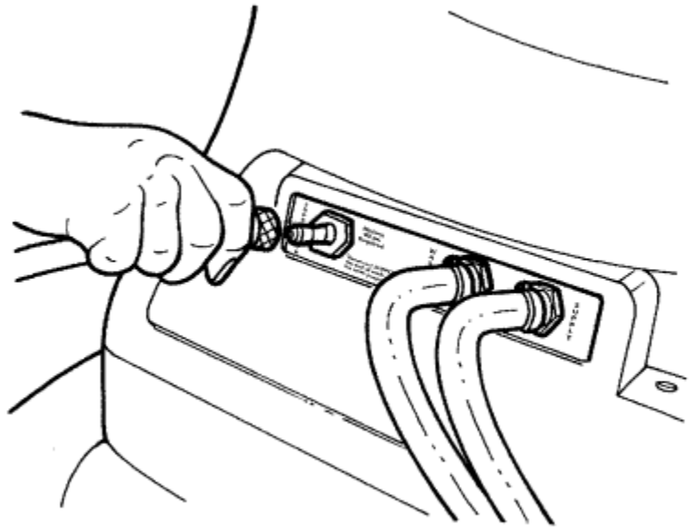

4. Disconnect the air supply hose from *DT 45096* flush and flow test tool .
5. Remove *DT 45096-55* cooler flush adaptor and install the fluid cooler bypass valve.
6. Attach cooler lines to the transmission.
7. Dispose of the waste ATF in accordance with all applicable federal, state, and local requirements.

&#169© Copyright Chevrolet. All rights reserved

Bushing and Mating Shaft Inspection

Note: Proper bushing and corresponding mating shaft inspection should be performed before replacing the bushing, shaft, and in some cases, the component which houses the bushing. Thoroughly clean and dry the bushing and shaft surfaces before inspecting for damage.

Any of the following bushing conditions require replacement of the bushing and/or housing:

- Discolouration due to heat distress
- Misalignment or displacement of bushing as a result of spinning in housing
- Medium to heavy scoring that can be easily detected with fingernail. Light scoring is a normal condition.
- Debris embedded into the bushing lining material
- Obvious damage, including excessive and uneven wear
- Excessive polishing. Minor polishing of the bushing is an indication of normal wear and does not require replacement.

Any of the following conditions require replacement of the bushing's mating shaft:

- Discolouration due to heat distress
- Rough surface finish that can be easily detected with finger
- Obvious shaft abnormalities, including warping or uneven surfaces
- Obvious damage or cracking

&#169© Copyright Chevrolet. All rights reserved

Main Fluid Pump Pressure High or Low

Checks	Causes
Fluid Pump Assembly	• Inspect for loose fluid pump bolts • Inspect for leaking or damaged fluid pump outlet seals and oil filter seal • Inspect for improperly installed or damaged oil filter • Inspect for sticking line pressure blow off valve
Front Differential Drive Gear Support Assembly	• Inspect for leaking or damaged drive gear support torque damper seal assembly or fluid passage tube gasket • Inspect for leaking or damaged drive gear support fluid passage tube assembly
Upper Valve Body Assembly	• Inspect for leaking or damaged upper valve body assembly gasket • Inspect for worn, sticking or damaged pressure regulator valve or pressure regulator valve spring
Lower Valve Body Assembly	Inspect for leaking or damaged lower valve body assembly gasket
Control Valve (w/Body & TCM) Valve Assembly	Inspect for leaking or damaged filter plate assembly seals
Case Assembly	Inspect for missing lubrication oil circuit orifice or baffle

&#169© Copyright Chevrolet. All rights reserved

Auxiliary Fluid Pump Pressure High or Low

Checks	Causes
Auxiliary Fluid Pump Assembly	• Inspect for loose auxiliary fluid pump bolts • Inspect for leaking or damaged auxiliary fluid pump outlet seals and oil filter seal • Inspect for improperly installed or damaged oil filter • Inspect for sticking auxiliary pressure blow off valve
Front Differential Drive Gear Support Assembly	• Inspect for leaking or damaged drive gear support torque damper seal assembly or fluid passage tube gasket • Inspect for leaking or damaged drive gear support fluid passage tube assembly
Upper Valve Body Assembly	• Inspect for leaking or damaged upper valve body assembly gasket • Inspect for worn, sticking or damaged pressure regulator valve or pressure regulator valve spring
Lower Valve Body Assembly	Inspect for leaking or damaged lower valve body assembly gasket
Control Valve (w/Body & TCM) Valve Assembly	Inspect for leaking or damaged filter plate assembly seals
Case Assembly	Inspect for missing lubrication oil circuit orifice or baffle

&#169© Copyright Chevrolet. All rights reserved

Automatic Transmission Fluid Leaks

Checks	Causes
Torque Damper	Inspect for damage.
Case Assembly	• Inspect for porosity or damage on the sealing surfaces • Inspect for loose oil cooler line bolts or damaged oil cooler line seals • Inspect for damaged manual shift shaft seal • Inspect for damaged or worn axle seal or axle seal thrower on the axle shafts • Inspect for loose pressure test plug and fluid level plug
Torque Damper Housing Assembly	• Inspect for damaged torque damper housing assembly • Inspect for porosity or damage on the sealing surfaces • Inspect for damaged torque damper housing seal • Inspect for damaged or worn torque damper fluid seal • Inspect for loose torque damper and differential housing bolts • Inspect for damaged or worn axle seal or axle seal throwers on the axle shafts
Case Cover assembly	• Inspect for porosity or damage on the sealing surface • Inspect for damaged case cover gasket • Inspect for loose case cover assembly bolts • Inspect for loose, damaged or leaking case cover assembly bore plugs
Valve Body Cover Assembly	• Inspect for damaged or warped valve body cover assembly • Inspect for damaged valve body cover gasket • Inspect for loose valve body cover bolts and valve body cover studs • Inspect for damaged or improperly installed wire connector hole seal • Inspect for damaged or worn fluid level indicator seal • Inspect for plugged vent holes in the fluid level indicator

&#169© Copyright Chevrolet. All rights reserved

Fluid Leak Diagnosis

General Method

1. Verify that the leak is transmission fluid.

   Caution: Do not clean using brake cleaner or other reactive solvents as these solvents can damage rubber gaskets, seals and bushes.

2. Thoroughly clean the suspected leak area using a rag.
3. Operate the vehicle for 24 km (15 mi), or until normal operating temperatures are reached.
4. Park the vehicle over clean paper or cardboard.
5. Shut OFF the engine.
6. Look for fluid spots on the paper.
7. Make the necessary repairs.

Powder Method

Caution: Do not clean using brake cleaner or other reactive solvents as these solvents can damage rubber gaskets, seals and bushes.

1. Thoroughly clean the suspected leak area using a rag.
2. Apply an aerosol type leak tracing powder to the suspected leak area.
3. Operate the vehicle for 24 km (15 mi), or until normal operating temperatures are reached.
4. Shut OFF the engine.
5. Inspect the suspected leak area.
6. Trace the leak path through the powder in order to find the source of the leak.
7. Make the necessary repairs.

Dye and Black Light Method

A fluid dye and black light kit is available from various tool manufacturers.

1. Follow the manufacturer's instructions in order to determine the amount of dye to use.
2. Operate the vehicle for 24 km (15 mi) or until normal operating temperatures are reached.
3. Detect the leak with the black light.
4. Make the necessary repairs.

Find the Cause of the Leak

Pinpoint the leak and trace the leak back to the source. You must determine the cause of the leak in order to repair the leak properly. For example, if you replace a gasket, but the sealing flange is bent, the new gasket will not repair the leak. You must also repair the bent flange. Before you attempt to repair a leak, check for the following conditions, and make repairs as necessary:

Gaskets

- Fluid level/pressure is too high
- Plugged vent or drain-back holes
- Improperly tightened fasteners
- Dirty or damaged threads
- Warped flanges or sealing surface
- Scratches, burrs, or other damage to the sealing surface
- Damaged or worn gasket
- Cracking or porosity of the component
- Improper sealant used, where applicable
- Incorrect gasket

Seals

- Fluid level/pressure is too high
- Plugged vent or drain-back holes
- Damaged seal bore
- Damaged or worn seal
- Improper installation
- Cracks in component
- Manual shaft or output shaft surface is scratched, nicked, or damaged
- Loose or worn bearing causing excess seal wear

Possible Points of Fluid Leaks

Transmission Case Cover and/or Valve Body Cover

- Incorrectly tightened bolts
- Improperly installed or damaged gasket/seal
- Damaged mounting face

- Incorrect gasket seal

Case Leak

- Damaged input speed sensor seal
- Damaged manual shaft seal
- Loose or damaged oil cooler lines/seals
- Worn or damaged axle shaft oil seal
- Loose line pressure pipe plug or fluid level pipe plug
- Porous casting
- Warped torque damper housing
- Damaged damper housing to case seal

Leak at the Torque Damper End

- Damper leak in the weld area
- Damper seal lip cut. Check the damper hub for damage
- Damper seal bushing moved forward and damaged
- Damper seal garter spring missing from the seal
- Porous casting of the torque damper housing

Leak at the Vent

- Overfilled system
- Water or coolant in the fluid; The fluid will appear milky
- Transmission case porous
- Incorrect fluid level indicator causing an overfilled system
- Plugged vent

Leak Inspection Points

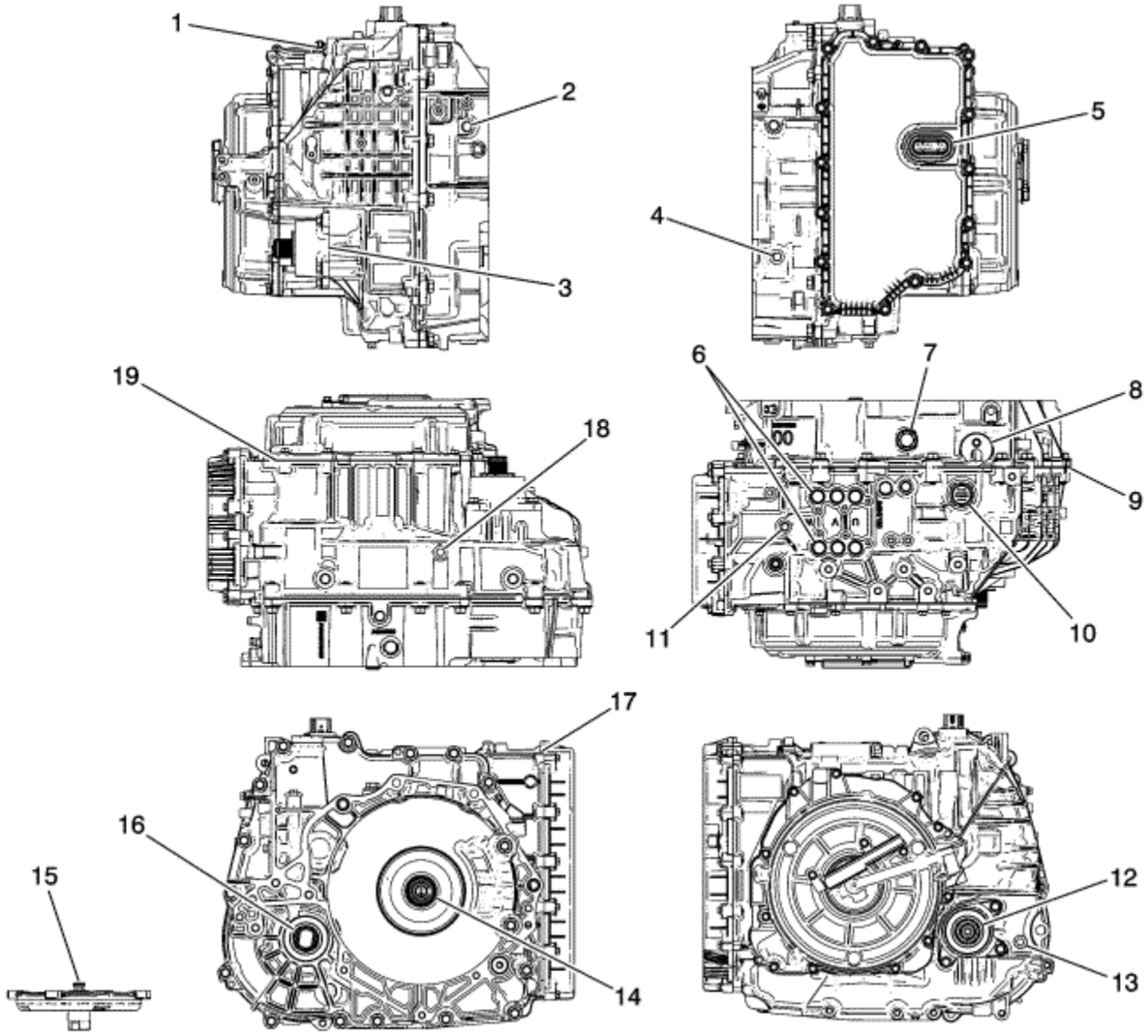

(1) Manual Shift Shaft Seal
(2) A/Trans Fluid Passage Plug
(3) Case Extension Assembly
(4) Auxiliary Pump Press Plug
(5) Control Valve Body Cover Wiring Connector Hole Seal
(6) Drive Motor/Generator Power Inverter Module Cable Assembly Seal - 3 Phase
(7) Filler Hole Plug

(8) Auxiliary Fluid Motor Retainer
(9) Torque Damper Housing Outer Seal
(10) Wiring Connector Seal
(11) A/Trans Vent Assembly
(12) Front Wheel Drive Shaft Oil Seal Assembly (LHS)
(13) Oil Level Plug
(14) A/Trans Torque Damper Fluid Seal Assembly
(15) A/Trans Torque Damper Assembly
(16) Front Wheel Drive Shaft Oil Seal Assembly (RHS)
(17) Control Valve Body Cover Gasket
(18) Transmission Fluid Drain Plug
(19) A/Trans Case Cover Gasket

&#169© Copyright Chevrolet. All rights reserved

Whine/Growl Noise That Changes with Vehicle Speed

Checks	Causes
Input Shaft Thrust Bearing Assembly	Inspect the bearing for wear or damage.
Sun Gear Carrier Thrust Bearing Assembly	• Inspect the carrier assembly for damaged pinion gears, thrust washers, pins, and rollers. • Inspect for a damaged centre support roller bearing assembly. • Inspect for damaged thrust bearings. • Inspect for damaged sun gears. • Inspect the carrier assembly for damaged output carrier rear sun gear thrust bearing (captured). • Inspect for damaged or stripped splines on the output carrier assembly.
Internal Gear Thrust Bearing Assembly	Inspect the bearing for wear or damage.
Front Differential Carrier Assembly	Inspect for damaged gears and bearings.
Front Differential Drive Pinion (w/Transfer Gear) Gear Assembly	Inspect for damaged gears and bearings.
Variable High 2-3-4 Clutch Hub Thrust Bearing Assembly	Inspect the bearings for wear or damage.
Variable High 2-3-4 Clutch Housing Thrust Bearing Assembly	Inspect the washer for wear or damage.
Input Shaft Bushing	Inspect the bushing for wear or damage.
1-3R Clutch Housing Bushing	Inspect the bushing for wear or damage.
Internal Gear Thrust Washer	Inspect the carrier assembly for damaged pinion gears, thrust washers, pins, and rollers.
Internal Gear Thrust Bearing Assembly	Inspect the bearing for wear or damage.
Output Shaft Thrust Bearing Assembly	Inspect the output carrier inner sun gear shaft bearing for damage or wear.
Variable High 2-3-4 Clutch Housing Thrust Bearing Assembly	• Inspect for damaged or restricted fluid filter assembly. • Inspect for damaged fluid filter seal assembly or improper sealing interface (leaks, fluid aeration).
Internal Gear Thrust Washer	Inspect the washer for wear or damage.

&#169© Copyright Chevrolet. All rights reserved

Noise in Drive or Reverse Gear

Checks	Causes
Variable Low 1-2R Clutch Assembly	• Inspect for damaged or worn VL1-2R clutch plates. • Inspect for damaged VL1-2R clutch backing plate. Inspect for worn splines on backing plate. • Inspect for damaged VL1-2R clutch backing plate retaining ring. • Inspect for damaged VL1-2R clutch piston assembly, spring, spring retaining ring, and centre support assembly.
Front Differential Carrier Assembly	Inspect for damaged gears and bearings.
Front Differential Drive Pinion (w/Transfer Gear) Gear Assembly	Inspect for damaged gears and bearings.

&#169© Copyright Chevrolet. All rights reserved

Vibration

Checks	Causes
Lug bolts for the Torque Damper	Inspect for loose torque damper lug bolts.
Sun Gear Thrust Washer	Inspect for wear or damage.
Input Shaft Thrust Bearing Assembly	Inspect for wear or damage.
Variable High 2-3-4 Clutch Hub Thrust Bearing Assembly	Inspect the bearing for wear or damage.
Sun Gear Carrier Assembly	• Inspect the carrier assembly for damaged pinion gears, thrust washers, pins, and rollers. • Inspect for a worn or damaged centre support roller bearing assembly. • Inspect for damaged thrust bearings. • Inspect the carrier assembly for damaged output carrier rear sun gear thrust bearing (captured).
Front Differential Carrier Assembly	Inspect for damaged gears and bearings.
Front Differential Drive Pinion (w/Transfer Gear) Gear Assembly	Inspect for damaged gears and bearings.
Internal Gear Thrust Bearing Assembly - 2nd Position	Inspect the bearing for wear or damage.

&#169© Copyright Chevrolet. All rights reserved

Noise and Vibration Analysis

A noise or vibration that is noticeable when the vehicle is in motion MAY NOT be the result of the transmission.

If noise or vibration is noticeable in PARK and NEUTRAL with the engine at idle, but is less noticeable as RPM increases, the cause may be from poor engine performance.

- Vibration may also be caused by a small amount of water inside the torque damper.
- Inspect the tyres for the following conditions:
  - Uneven wear
  - Imbalance
  - Mixed sizes
  - Mixed radial and bias ply
- Inspect the suspension components for the following conditions:
  - Alignment wear or damage
  - Loose fasteners
  - Driveline damage or wear
- Inspect the engine and transmission mounts for damage and loose bolts.
- Inspect the transmission case mounting holes for the following conditions:
  - Missing bolts, nuts, and studs
  - Stripped threads
  - Cracks
- Inspect the flywheel for the following conditions:
  - Missing or loose bolts
  - Cracks
  - Imbalance
- Inspect the torque damper for the following conditions:
  - Missing or loose bolts or lugs
  - Missing or loose balance weights
  - Imbalance caused by heat distortion or fluid contamination

&#169© Copyright Chevrolet. All rights reserved

No Park or Drive

Checks	Causes
Front Differential Carrier Assembly	Inspect for damaged gears and bearings.
Front Differential Drive Pinion (w/Transfer Gear) Gear Assembly	Inspect for damaged gears and bearings.

© Copyright Chevrolet. All rights reserved

No Drive in All Ranges

Checks	Causes
Carrier Assembly	• Inspect the carrier assembly for damaged pinion gears, thrust washers, pins, and rollers. • Inspect for damaged thrust bearings. • Inspect for damaged sun gears. • Inspect the carrier assembly for damaged output carrier rear sun gear thrust bearing (captured).
Drive Motor with Generator Position B (2)	Motor Failure • Inspect 3 phase cables • Inspect connections at motor • Inspect motor end bearings
Thrust Bearing 1st, 2nd and 3rd Positions Assembly	Inspect the bearing for wear or damage.
Output Shaft Assembly	Inspect for damaged internal gears.
Front Differential Carrier Assembly	Inspect for damaged gears and bearings.
Front Differential Drive Pinion (w/Transfer Gear) Gear Assembly	Inspect for damaged gears and bearings.
Sun Gear	Inspect for spline wear or damage.
Fluid Filter Assembly	• Inspect for damaged or restricted fluid filter assembly. • Inspect for damaged fluid filter seal assembly or improper sealing interface, leaks, and fluid aeration.
Automatic Transmission Fluid Pump Seal	Inspect for worn or damaged seal.
Auxiliary Fluid Pump Seal	Inspect for worn or damaged seal.

&#169© Copyright Chevrolet. All rights reserved

No Reverse Gear

Checks	Causes
Carrier Assembly	• Inspect the carrier assembly for damaged pinion gears, thrust washers, pins, and rollers. • Inspect for damaged thrust bearings. • Inspect for damaged sun gears. • Inspect the carrier assembly for damaged output carrier rear sun gear thrust bearing (captured).
Drive Motor with Generator - Position B (2)	Motor Failure • Inspect 3 phase cables. • Inspect connections at motor. • Inspect motor end bearings.
Thrust Bearing 1st 2nd and 3rd Positions Assembly	Inspect the bearing for wear or damage.
Output Shaft Assembly	Inspect for damaged internal gears.
Front Differential Carrier Assembly	Inspect for damaged gears and bearings.
Front Differential Drive Pinion (w/Transfer Gear) Gear Assembly	Inspect for damaged gears and bearings.
Sun Gear	Inspect for spline wear or damage.
Fluid Filter Assembly	• Inspect for damaged or restricted fluid filter assembly. • Inspect for damaged fluid filter seal assembly or improper sealing interface, leaks, and fluid aeration.
Automatic Transmission Fluid Pump Seal	Inspect for worn or damaged seal.
Auxiliary Fluid Pump Seal	Inspect for worn or damaged seal.

&#169© Copyright Chevrolet. All rights reserved

No Drive or Reverse Gear

Checks	Causes
Variable Low 1-2R Clutch Assembly	• Inspect for damaged VL1-2R clutch housing assembly. • Inspect for damaged or distorted shaft.
Variable High 2-3-4 and 1-3R Clutch Hub Assembly	• Inspect for damaged or distorted shaft on hub assembly. • Inspect the output carrier inner sun gear shaft bushings for damage or wear.

&#169© Copyright Chevrolet. All rights reserved

Harsh, Soft, Delayed or Slipping Drive or Reverse Gear

Checks	Causes
Variable Low 1-2R Clutch Assembly	• Inspect for damaged or worn low and VL1-2R clutch plates. • Inspect for damaged VL1-2R clutch backing plate. Inspect for worn splines on backing plate. • Inspect for damaged VL1-2R clutch backing plate retaining ring. • Inspect for damaged VL1-2R clutch piston assembly, spring, spring retaining ring, and centre support assembly.

&#169© Copyright Chevrolet. All rights reserved

Stuck in Drive or Reverse Gear

Checks	Causes
Variable Low 1-2R Clutch Assembly	• Inspect for damaged or worn VL1-2R clutch plates. • Inspect for damaged VL1-2R clutch backing plate. Inspect for worn splines on backing plate. • Inspect for damaged VL1-2R clutch backing plate retaining ring. • Inspect for damaged VL1-2R clutch piston assembly, spring, spring retaining ring, and centre support assembly.

&#169© Copyright Chevrolet. All rights reserved

Harsh Garage Shift

Checks	Causes
Variable Low 1-2R Clutch Assembly	Inspect for damaged or worn VL1-2R clutch plates.

© Copyright Chevrolet. All rights reserved

Auxiliary Fluid Pump Control Module Replacement

The Auxiliary Fluid Pump Control Module is integrated into the Drive Motor Generator Power Inverter Module. If the Auxiliary Fluid Pump Control Module needs to be replaced, a new Drive Motor Generator Power Inverter Module must be installed. Refer to Drive Motor Generator Power Inverter Module Replacement .

© Copyright Chevrolet. All rights reserved

Transmission Control Lever Knob Replacement

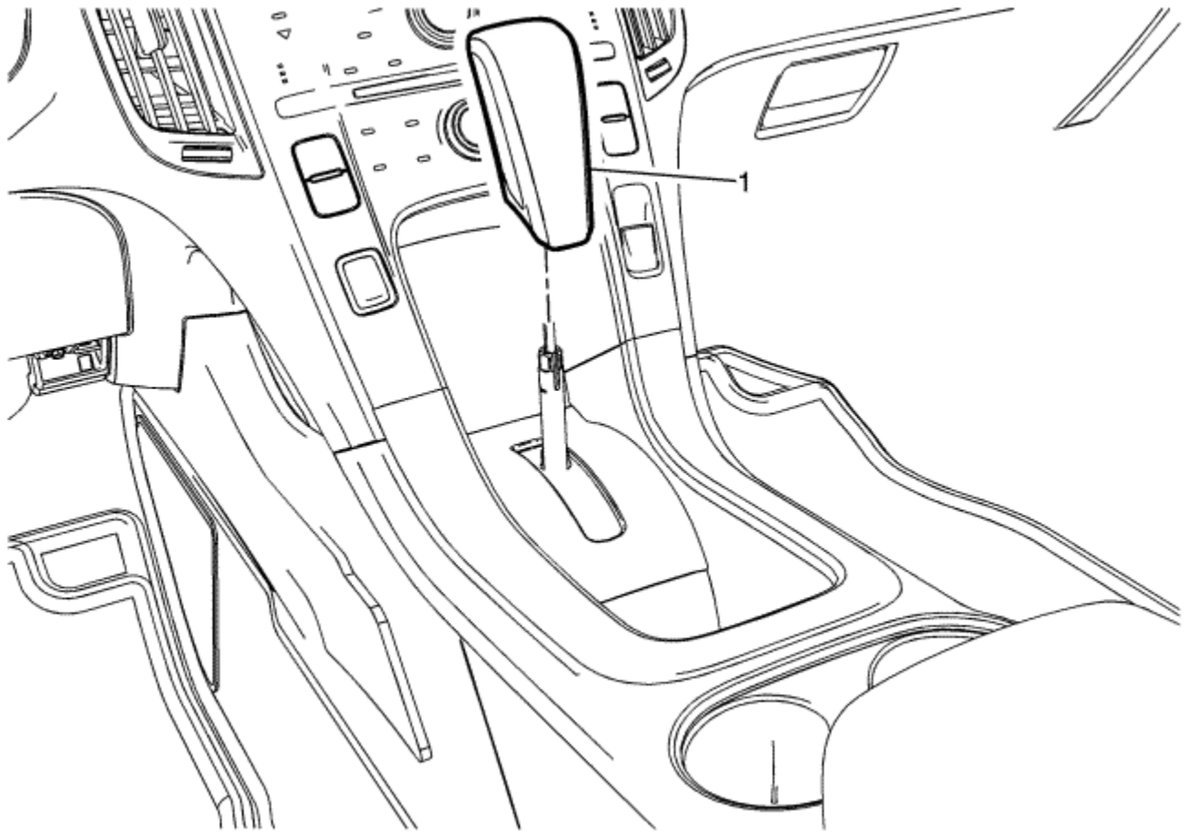

Callout	Component Name
1	Shift Control Knob **Procedure** Place the shift lever in the Neutral position.

Tip
To remove the knob, pull upward with a twisting motion. Considerable effort may be required to remove the knob from the shift control lever.

© Copyright Chevrolet. All rights reserved

Transmission Control Replacement

Removal Procedure

Danger: Always perform the High Voltage Disabling procedure prior to servicing any High Voltage component or connection. Personal Protection Equipment (PPE) and proper procedures must be followed.

The High Voltage Disabling procedure will perform the following tasks:

- Identify how to disable high voltage.
- Identify how to test for the presence of high voltage.
- Identify condition under which high voltage is always present and personal protection equipment (PPE) and proper procedures must be followed.

Failure to follow the procedures exactly as written may result in serious injury or death.

1. Disable the high voltage system. Refer to High Voltage Disabling .
2. Remove the front floor console. Refer to Front Floor Console Replacement .

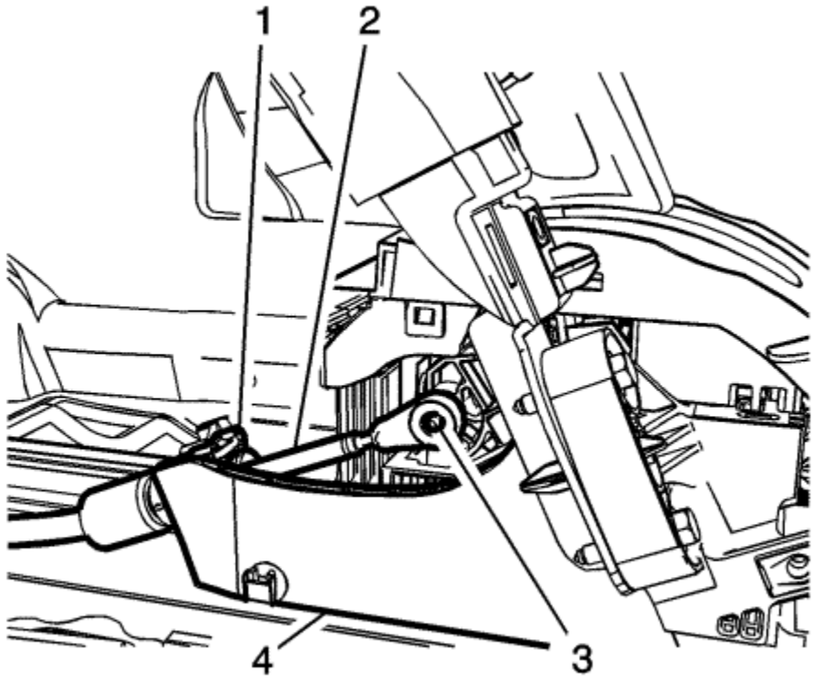

3. Slide the shift cable retaining clip (1) toward the front of the vehicle.
4. Disconnect the shift cable (2) from the shift control actuator pin (3).
5. Slide the shift cable (2) upward to remove from shift control base (4).

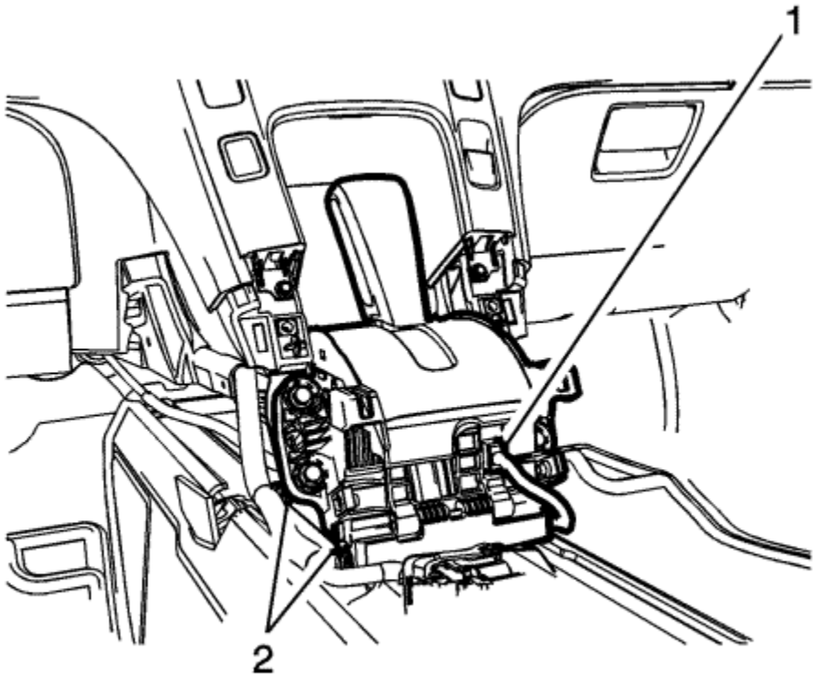

6. Disconnect the electrical connector (1) from the shift control assembly.
7. Disconnect the wiring harness retainers (2) from the shift control assembly.
8. Remove the inflatable restraint sensing and diagnostic module. Refer to Inflatable Restraint Sensing and Diagnostic Module Replacement .

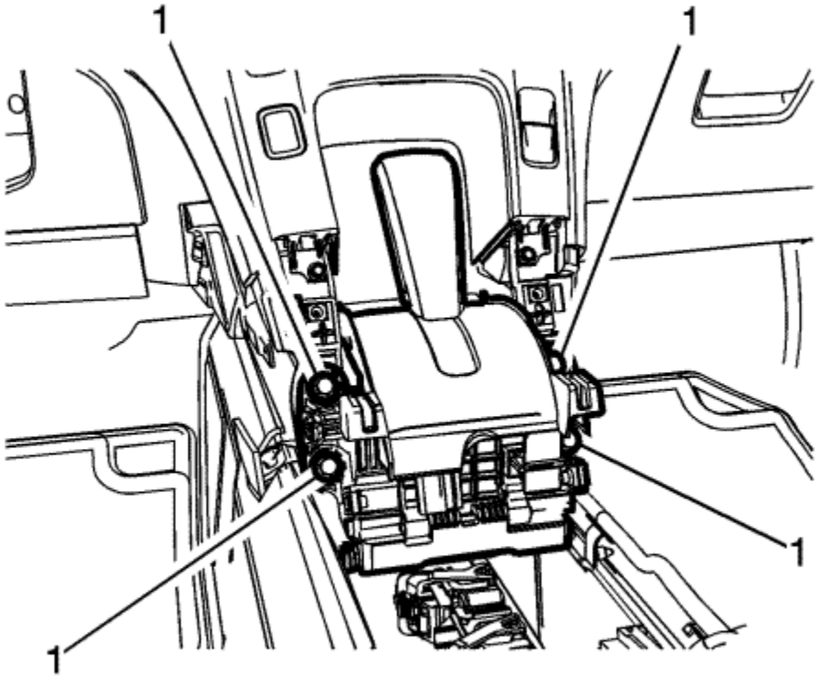

9. Remove the four fasteners (1).
10. Remove the shift control assembly from the instrument panel tie bar assembly.

Installation Procedure

1. Install the shift control assembly to the instrument panel tie bar assembly.

   Caution: Refer to Fastener Caution in the Preface section.

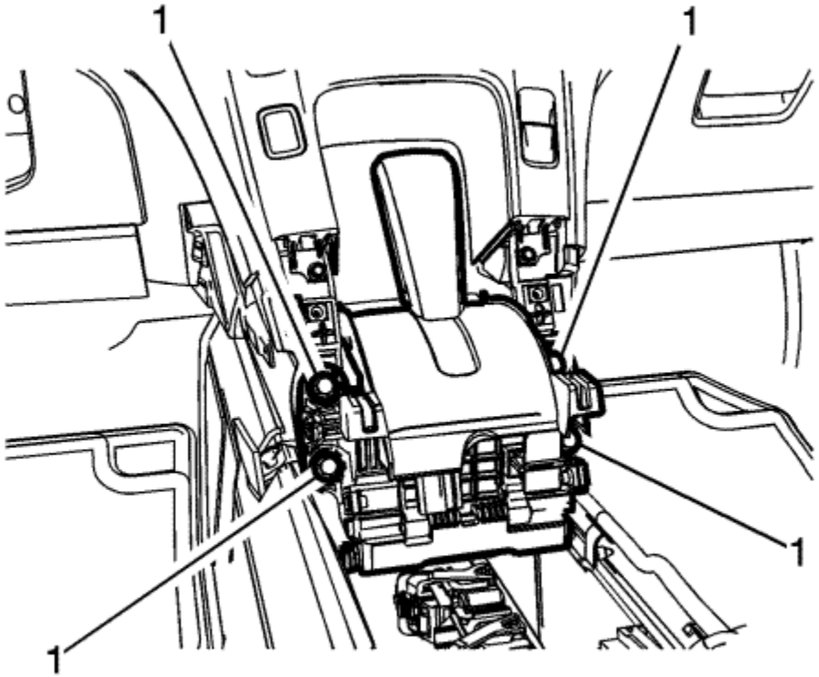

2. Install the shift control assembly fasteners (1) and tighten to **10 N·m (89 lb in)**.

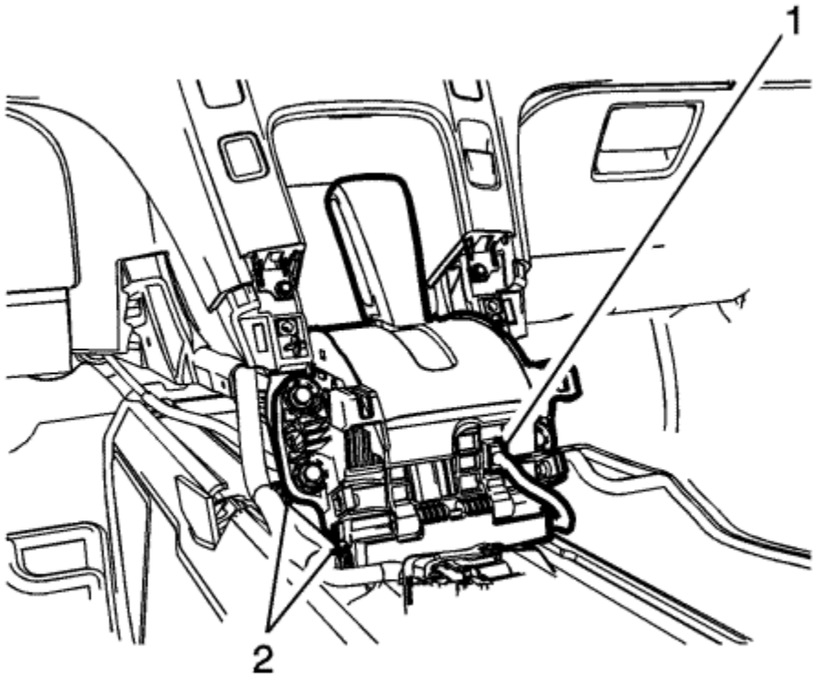

3. Install the electrical connector (1) to the shift control assembly.
4. Install the wiring harness retainers (2) to the shift control assembly.

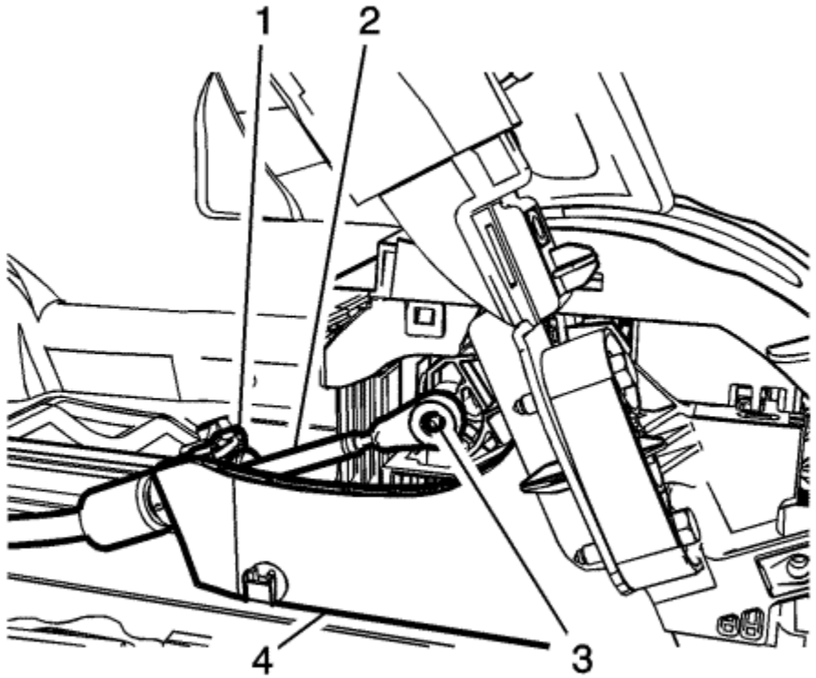

5. Install the shift cable (2) in the shift control base (4).
6. Slide the shift cable retaining clip (1) toward the rear of the vehicle.
7. Connect the shift cable (2) to the shift control actuator pin (3).
8. Install the inflatable restraint sensing and diagnostic module. Refer to Inflatable Restraint Sensing and Diagnostic Module Replacement .
9. Install the front floor console. Refer to Front Floor Console Replacement .
10. Check transmission for proper operation. If necessary, adjust shift cable. Refer to Range Selector Lever Cable Adjustment .

Danger: Always perform the High Voltage Disabling procedure prior to servicing any High Voltage component or connection. Personal Protection Equipment (PPE) and proper procedures must be followed.

The High Voltage Disabling procedure will perform the following tasks:

- Identify how to disable high voltage.
- Identify how to test for the presence of high voltage.
- Identify condition under which high voltage is always present and personal protection equipment (PPE) and proper procedures must be followed.

Failure to follow the procedures exactly as written may result in serious injury or death.

11. Enable the high voltage system. Refer to High Voltage Enabling .

&#169© Copyright Chevrolet. All rights reserved

Automatic Transmission Range Selector Lever Replacement

Removal Procedure

1. Set the park brake and chock the wheels.

   Danger: Always perform the High Voltage Disabling procedure prior to servicing any High Voltage component or connection. Personal Protection Equipment (PPE) and proper procedures must be followed.

   The High Voltage Disabling procedure will perform the following tasks:

   - Identify how to disable high voltage.
   - Identify how to test for the presence of high voltage.
   - Identify condition under which high voltage is always present and personal protection equipment (PPE) and proper procedures must be followed.

   Failure to follow the procedures exactly as written may result in serious injury or death.

2. Disable the hybrid high voltage system. Refer to High Voltage Disabling .

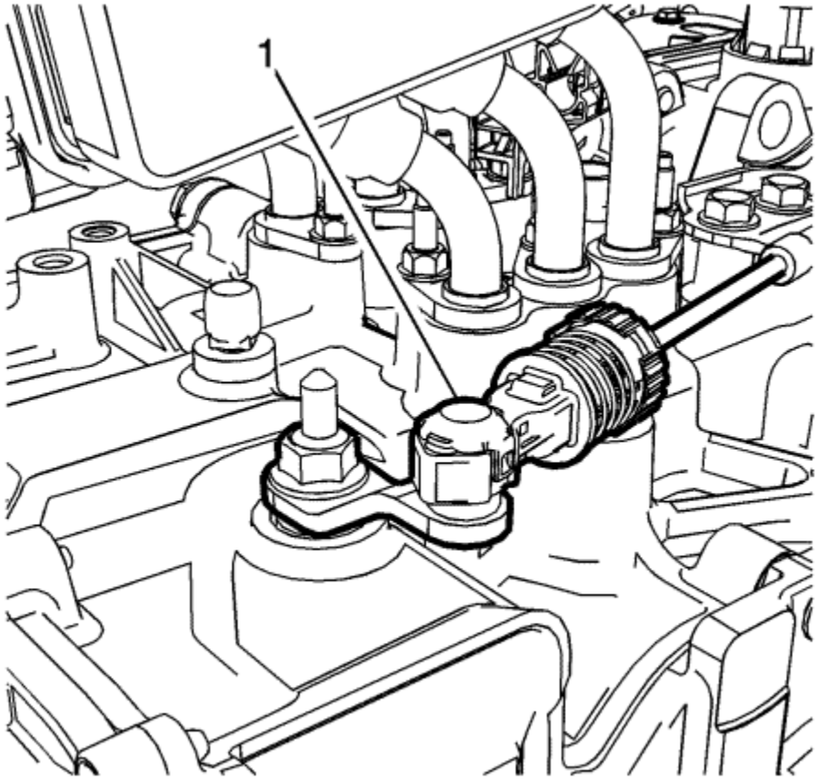

3. Disconnect the transmission range selector lever cable terminal (1) from the transmission manual gear shift lever pin.

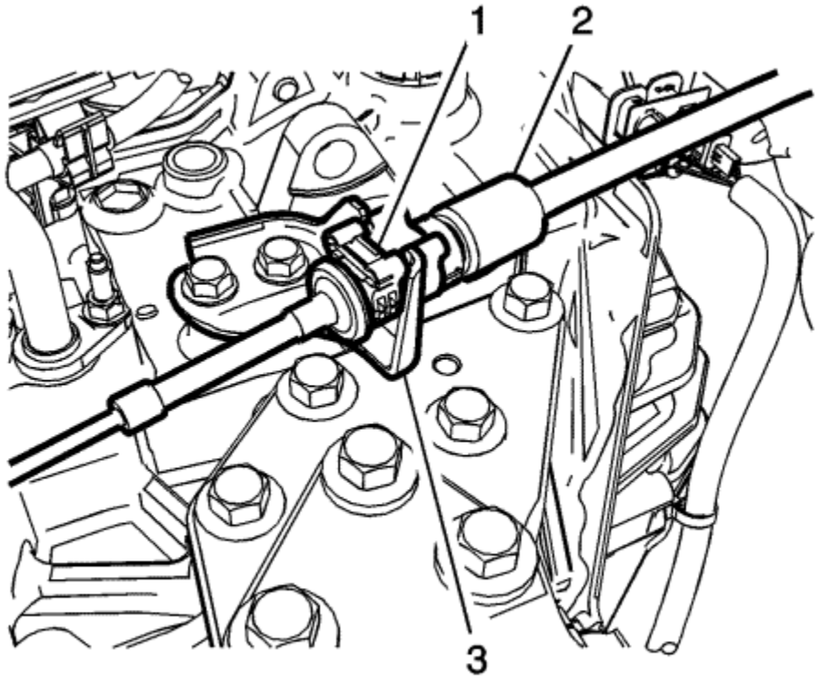

Warning: Hold the transmission range selector lever while removing or installing the lever retaining nut. Failure to hold the lever can cause damage to the transmission internal park system components which could allow the vehicle to roll when placed in the park position.

4. Press the locking tab (1) rearward in order to release the transmission range selector lever cable (2) from the cable bracket.

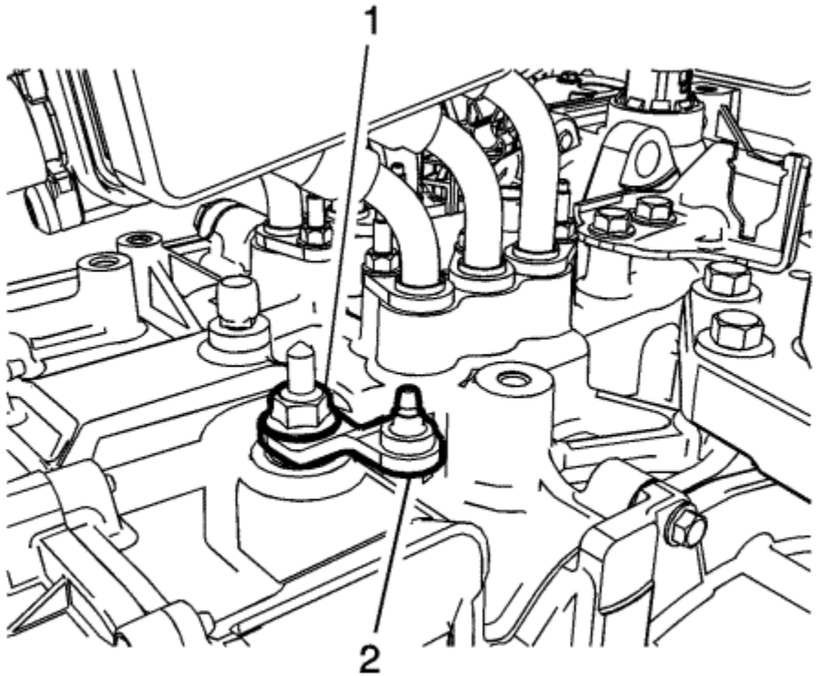

5. Remove the transmission range selector lever nut (1).
6. Remove the transmission range selector lever (2).

Installation Procedure

Warning: Hold the transmission range selector lever while removing or installing the lever retaining nut. Failure to hold the lever can cause damage to the transmission internal park system components which could allow the vehicle to roll when placed in the park position.

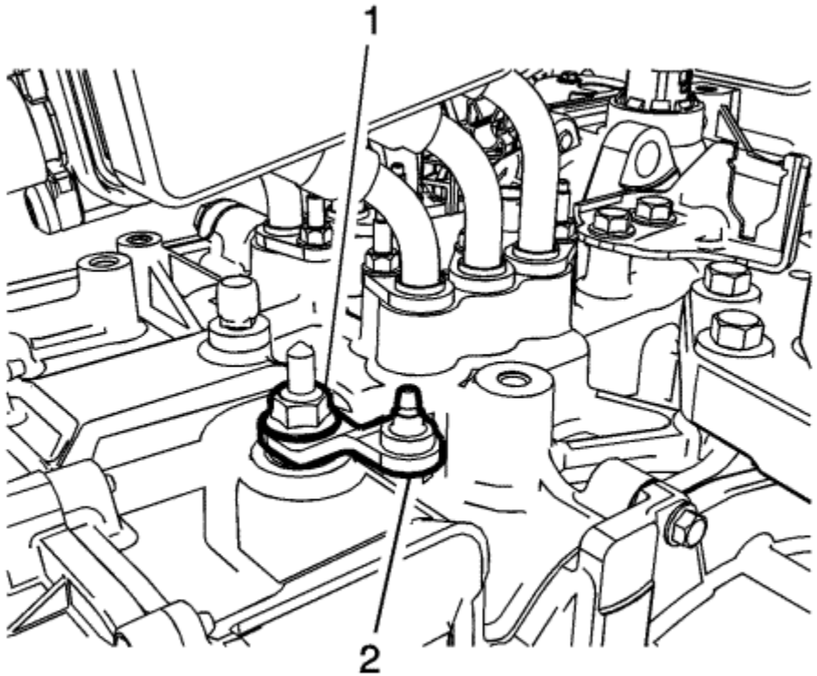

1. Install the transmission range selector lever (2).

   Caution: Refer to Fastener Caution in the Preface section.

2. Install the transmission range selector lever nut (1) and tighten to **30 N·m (22 lb ft)**.

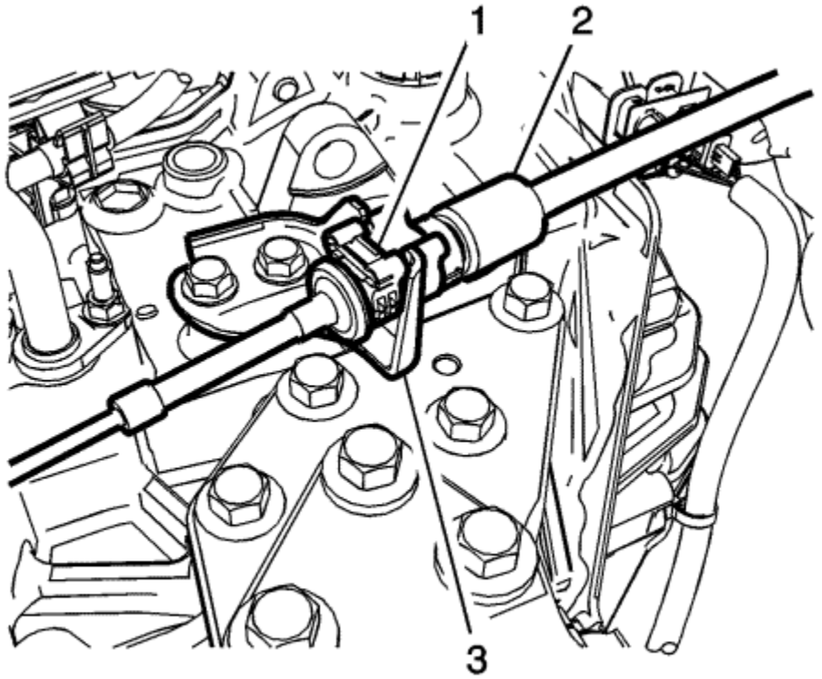

3. Install the transmission range selector lever cable (2) to the cable bracket.
4. Press the locking tab (1) forward in order to retain the transmission range selector lever cable (2) to the cable bracket (3).

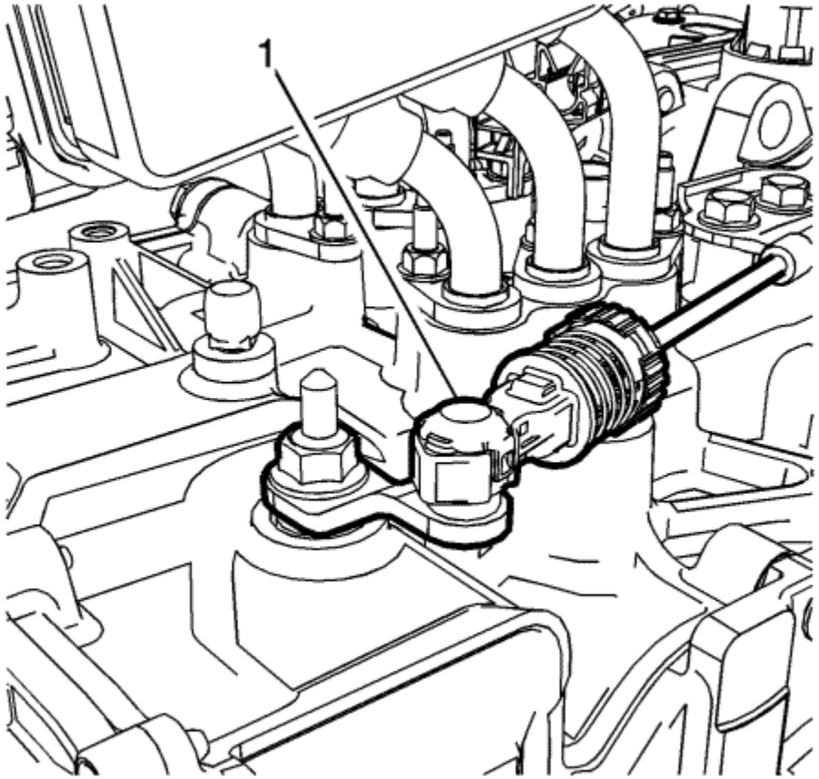

5. Connect the transmission range selector lever cable terminal (1) to the transmission manual gear shift lever pin.
6. Check the range selector cable adjustment. Refer to Range Selector Lever Cable Adjustment .
7. Enable the hybrid high voltage system. Refer to High Voltage Enabling .

&#169© Copyright Chevrolet. All rights reserved

Range Selector Lever Cable Replacement

Removal Procedure

1. Set the park brake and chock the wheels.

   Danger: Always perform the High Voltage Disabling procedure prior to servicing any High Voltage component or connection. Personal Protection Equipment (PPE) and proper procedures must be followed.

   The High Voltage Disabling procedure will perform the following tasks:

   - Identify how to disable high voltage.
   - Identify how to test for the presence of high voltage.
   - Identify condition under which high voltage is always present and personal protection equipment (PPE) and proper procedures must be followed.

   Failure to follow the procedures exactly as written may result in serious injury or death.

2. Disable the hybrid high voltage system. Refer to High Voltage Disabling .

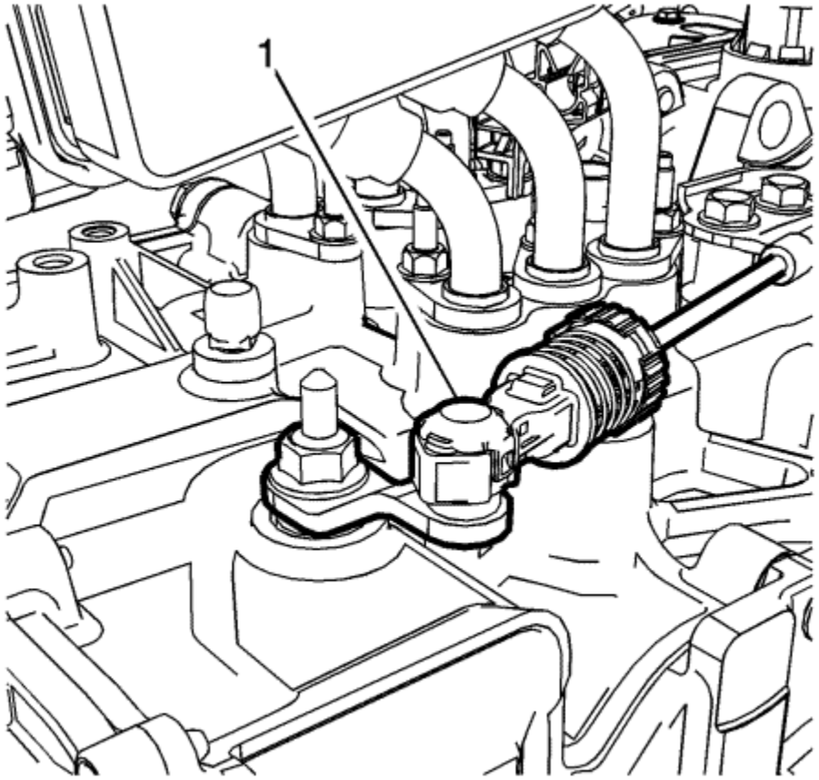

3. Disconnect the transmission range selector lever cable terminal (1) from the transmission manual gear shift lever pin.

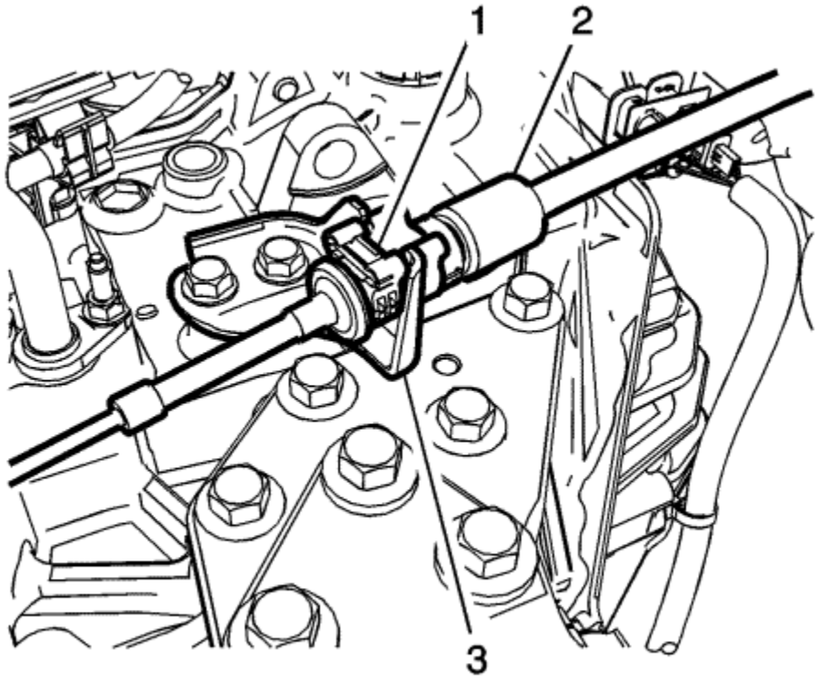

4. Press the locking tab (1) rearward in order to release the transmission range selector lever cable (2) from the cable bracket.
5. Remove the front floor console extension - left. Refer to Front Floor Console Extension Replacement - Left Side .

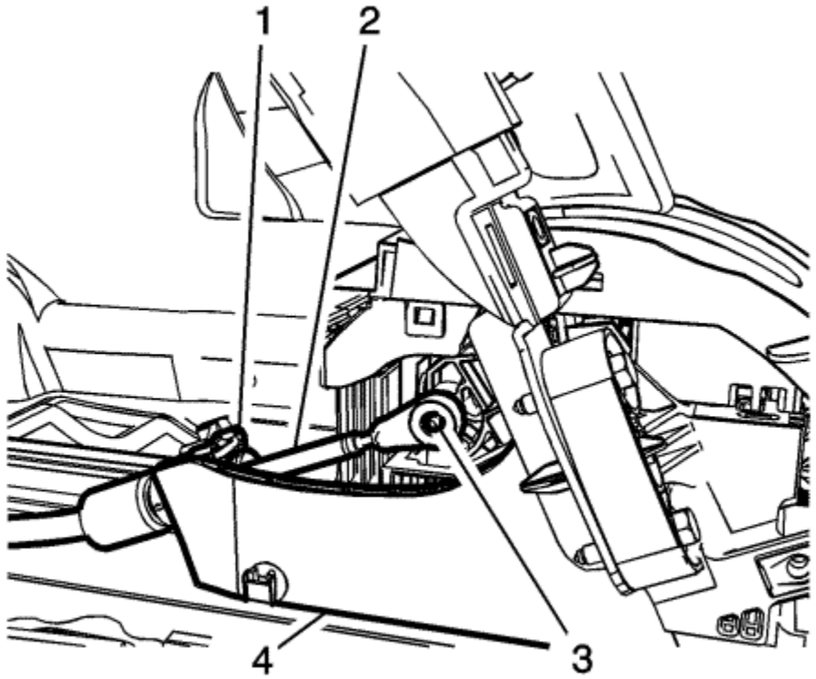

6. Press the locking tab (1) forward in order to release the transmission range selector lever cable (2) from the shift control base (4).
7. Disconnect the transmission range selector lever cable terminal (3) from the transmission manual gear shift lever pin.
8. Remove the shift cable from shift control base.

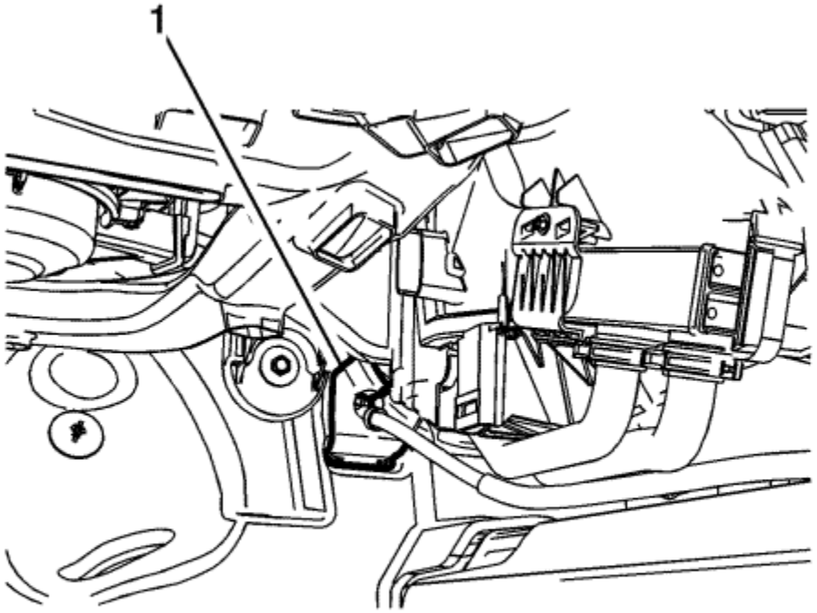

9. Pull the insulation panel flap (1) down to gain access to the shift cable grommet.

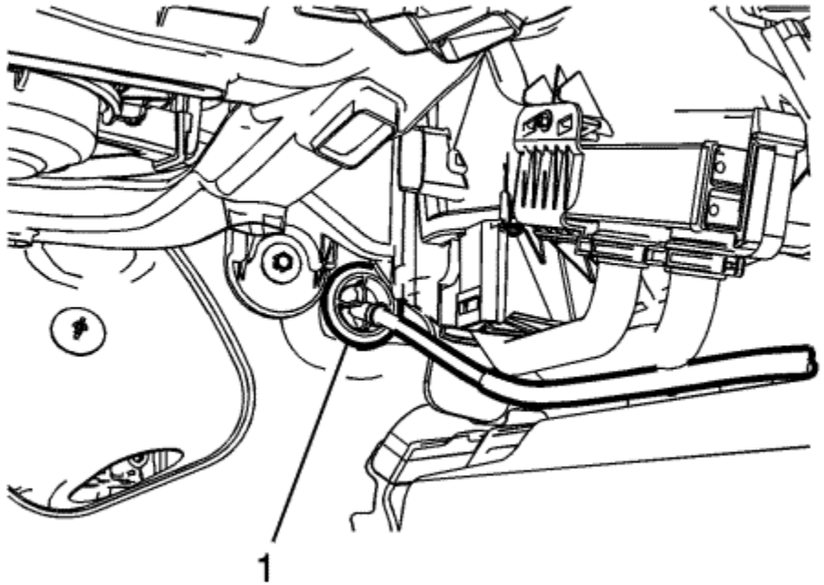

10. Gently pry the grommet (1) out, then remove the shift cable from the vehicle.

Installation Procedure

1. Position the shift cable in the vehicle.

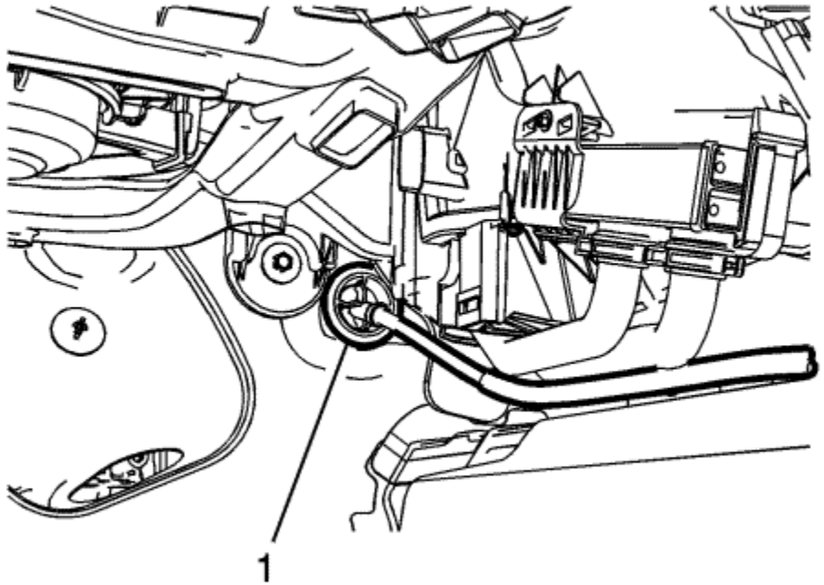

2. Install the shift cable grommet (1) into the panel.

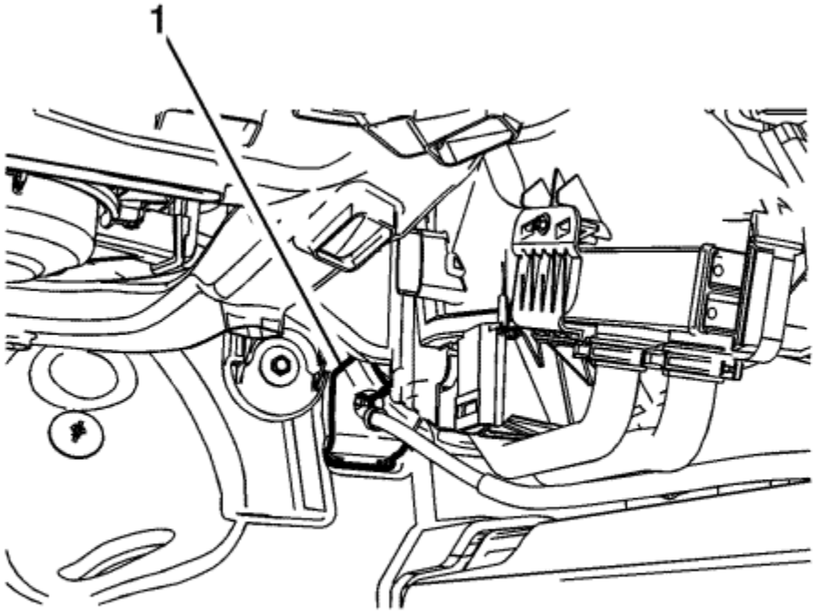

3. Position the insulation panel flap (1) up to cover the shift cable grommet.
4. Position the shift cable in the shift control base.

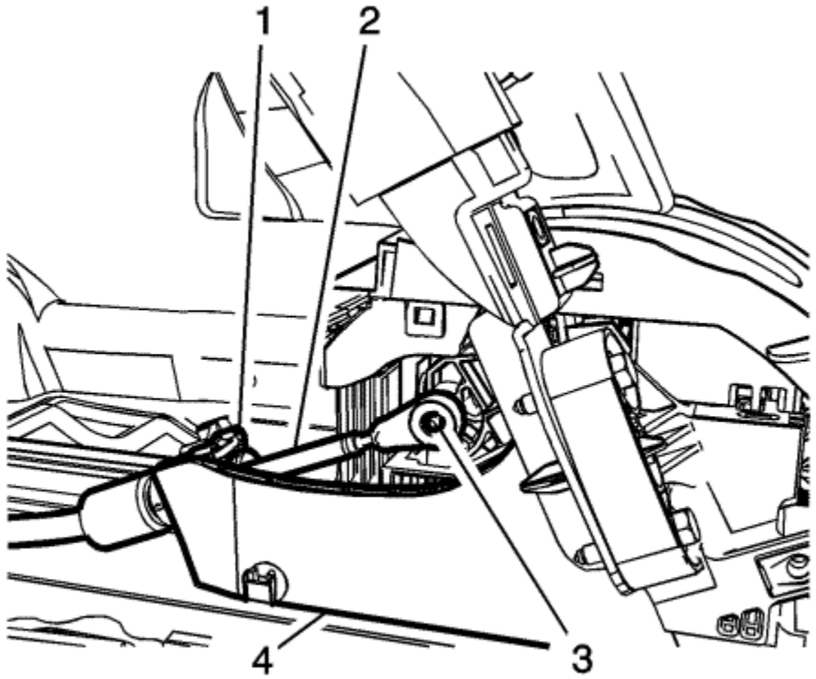

5. Press the locking tab (1) rearward to retain the transmission range selector lever cable (2) in the shift control base (4).
6. Connect the transmission range selector lever cable terminal (3) to the shift control shift lever pin.
7. Install the front floor console extension - left. Refer to Front Floor Console Extension Replacement - Left Side .

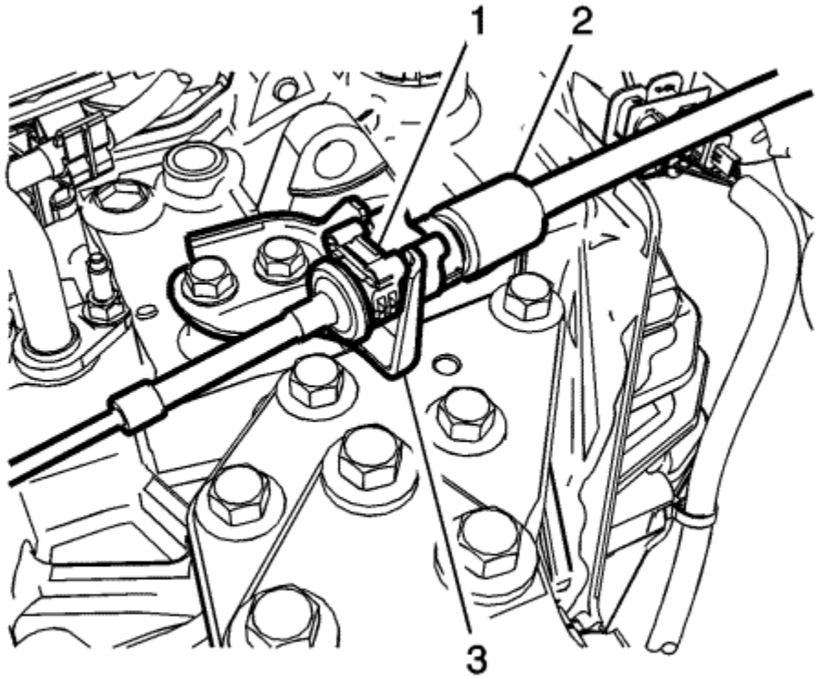

8. Install the transmission range selector lever cable (2) to the cable bracket (3).
9. Press the locking tab (1) forward in order to retain the transmission range selector lever cable (2) to the cable bracket (3).

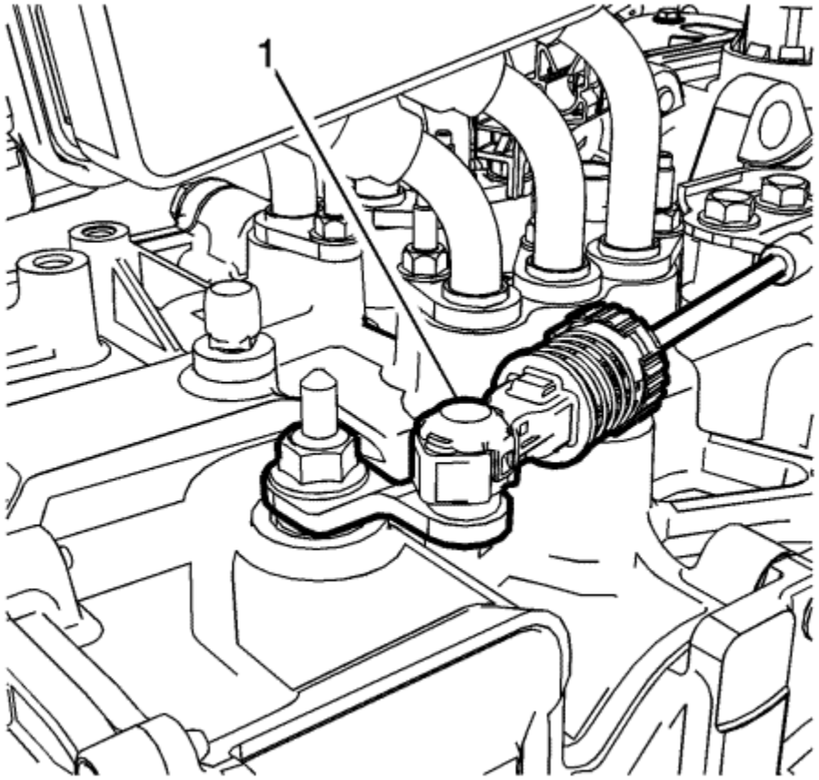

10. Connect the transmission range selector lever cable terminal (1) to the transmission manual gear shift lever pin.
11. Perform the range selector cable adjustment. Refer to Range Selector Lever Cable Adjustment .
12. Enable the hybrid high voltage system. Refer to High Voltage Enabling .

&#169© Copyright Chevrolet. All rights reserved

Range Selector Lever Cable Adjustment

Note: Adjust the automatic transmission range selector cable while the transmission and the gear selector are in the Park position only. Failure to do so may cause mis-adjustment.

1. Set the park brake and chock the wheels.

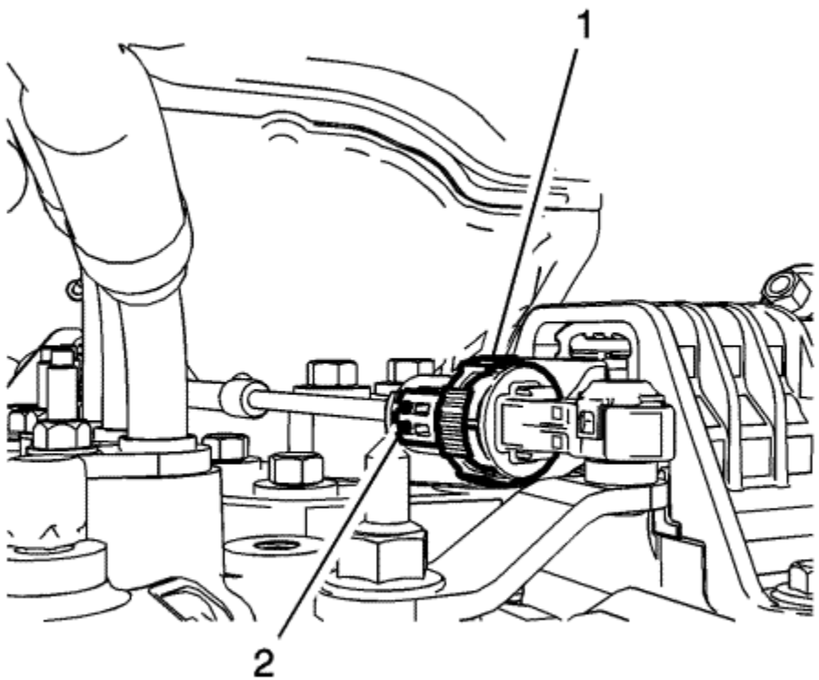

2. Pull the retaining collar (1) forward, then release the range select cable adjuster clip (2) by pushing out on the adjuster clip from the side.
3. Verify the transmission range select lever is in the park position.
4. Verify the transmission shift control lever is in the park position.

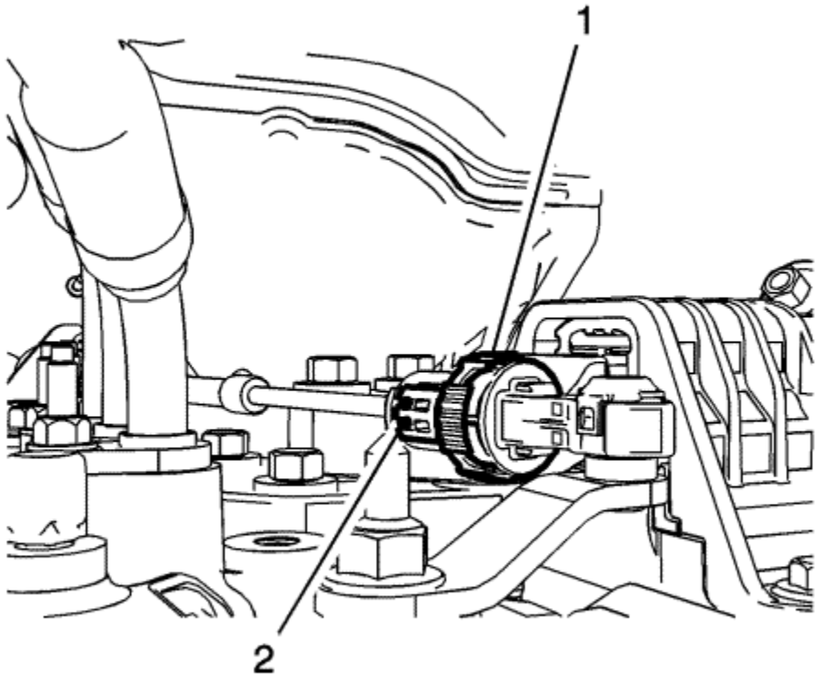

5. Depress the adjuster clip (2) locking the adjuster clip completely, then release the retaining collar.
6. Ensure that the cable adjuster is secured.
7. Check the transmission range select lever in all gear selections for proper operation.

© Copyright Chevrolet. All rights reserved

Range Selector Lever Cable Bracket Replacement

Removal Procedure

Danger: Always perform the High Voltage Disabling procedure prior to servicing any High Voltage component or connection. Personal Protection Equipment (PPE) and proper procedures must be followed.

The High Voltage Disabling procedure will perform the following tasks:

- Identify how to disable high voltage.
- Identify how to test for the presence of high voltage.
- Identify condition under which high voltage is always present and personal protection equipment (PPE) and proper procedures must be followed.

Failure to follow the procedures exactly as written may result in serious injury or death.

1. Disable the hybrid high voltage system. Refer to High Voltage Disabling .
2. Remove the drive motor generator power inverter module from the vehicle. Refer to Drive Motor Generator Power Inverter Module Replacement .

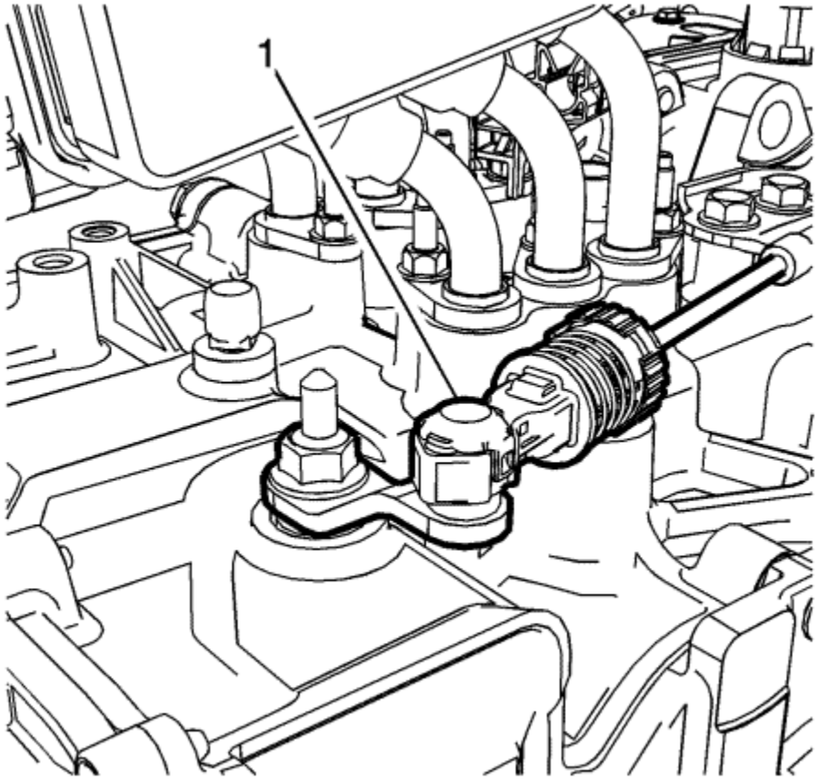

3. Disconnect the transmission range selector lever cable terminal (1) from the transmission manual gear shift lever pin.

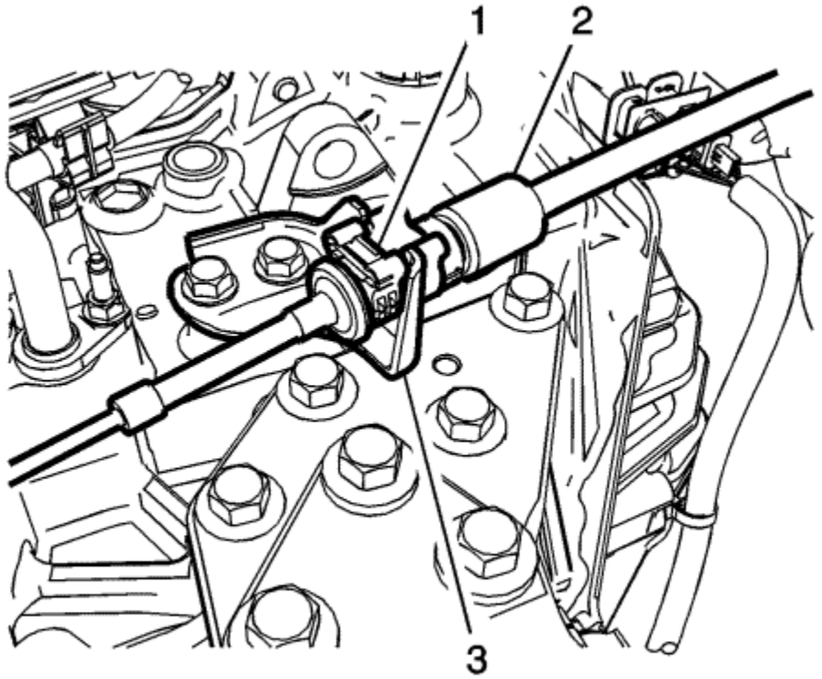

4. Press the locking tab (1) rearward in order to release the transmission range selector lever cable (2) from the cable bracket.

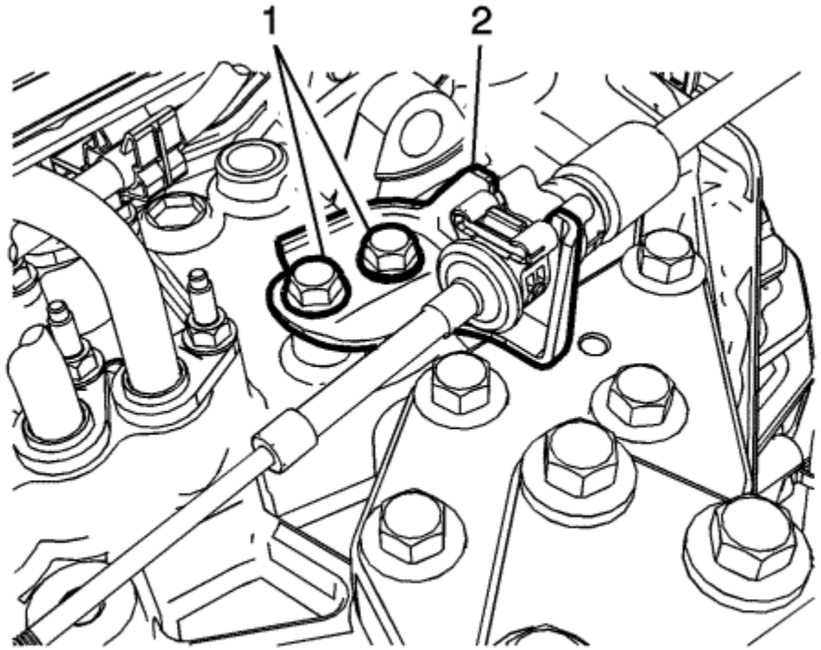

5. Remove the shift control cable bracket bolts (1).
6. Remove the shift control cable bracket (2).

Installation Procedure

Caution: Refer to Fastener Caution in the Preface section.

1. Install the transaxle shift control bracket and bolts, then tighten the bolts to **22 N·m (16 lb ft)**.

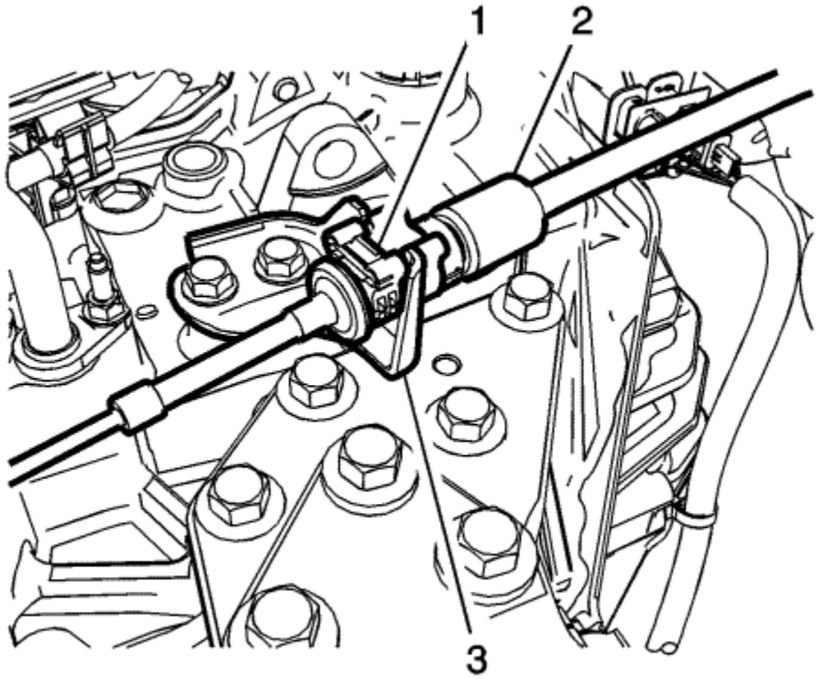

2. Install the transmission range selector lever cable (2) to the cable bracket.
3. Press the locking tab (1) forward in order to retain the transmission range selector lever cable (2) to the cable bracket (3).

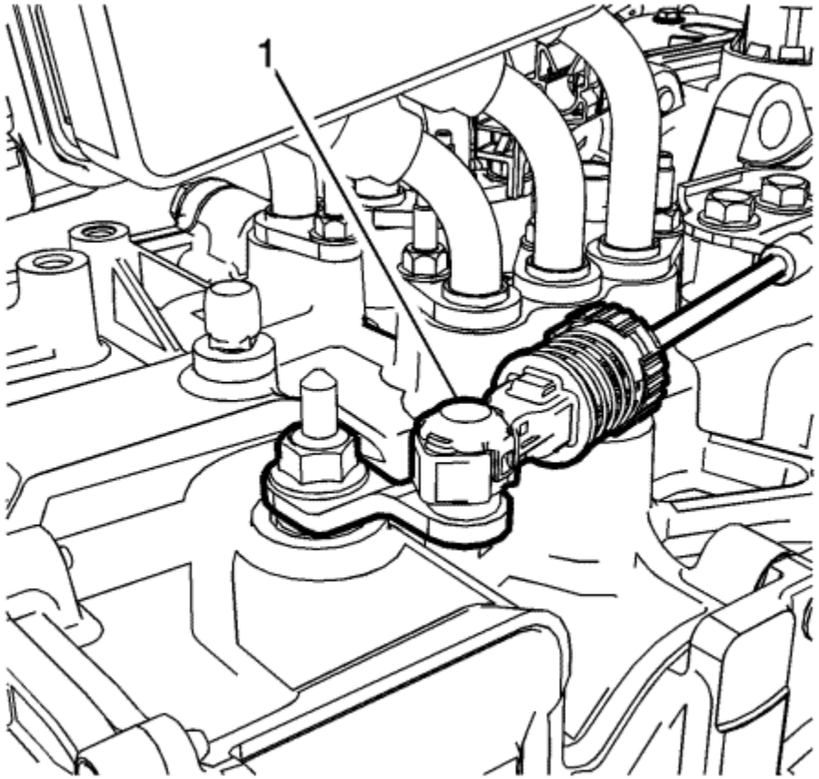

4. Connect the transmission range selector lever cable terminal (1) to the transmission manual gear shift lever pin.
5. Check the range selector cable adjustment. Refer to Range Selector Lever Cable Adjustment .
6. Install the drive motor generator power inverter module in the vehicle. Refer to Drive Motor Generator Power Inverter Module Replacement .
7. Enable the hybrid high voltage system. Refer to High Voltage Enabling .

&#169© Copyright Chevrolet. All rights reserved

Transmission Fluid Replacement

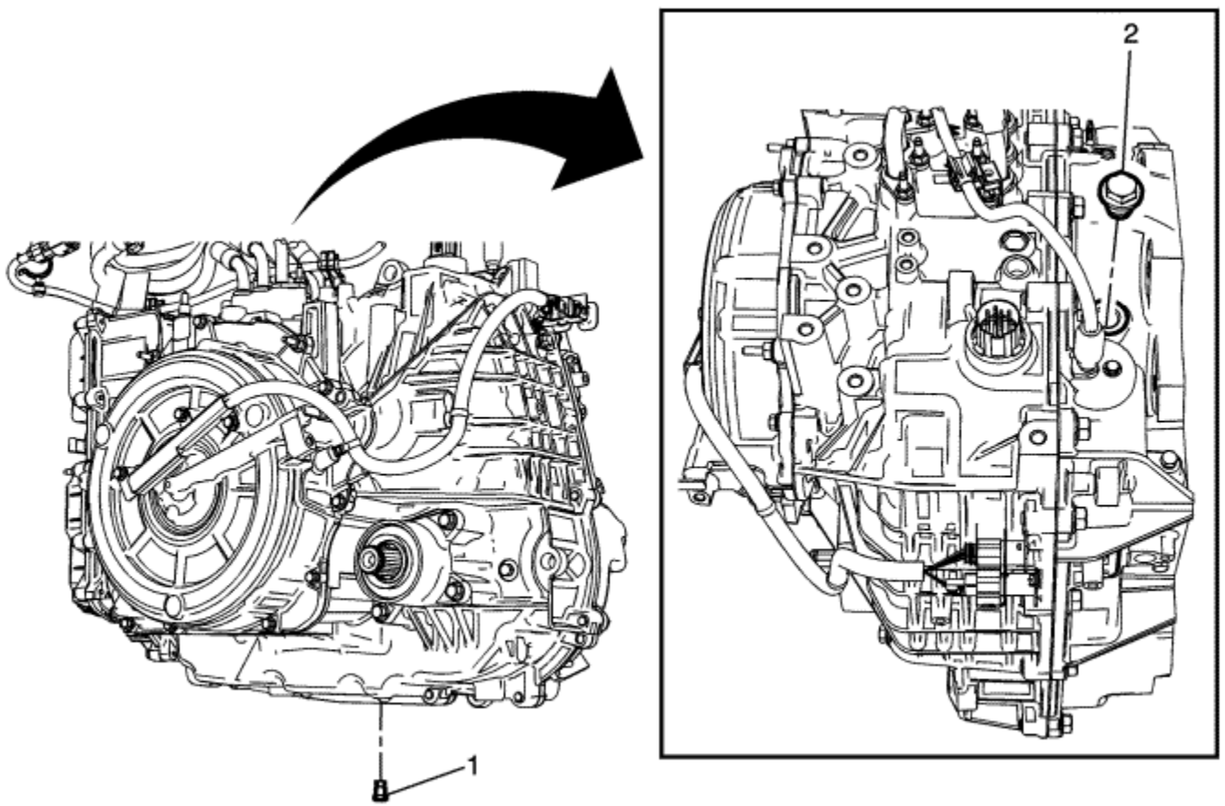

Callout	Component Name
Danger: Do not use a service jack in locations other than those specified to lift this vehicle. Lifting the vehicle with a jack in those other locations could cause the vehicle to slip off the jack and roll; this could cause injury or death. **Preliminary Procedure**	

Raise the vehicle. Refer to Lifting and Jacking the Vehicle .	
1	Fluid Drain Plug **Caution:** Refer to Component Fastener Tightening Caution in the Preface section. **Note:** Place a drain pan capable of containing more than 5 quarts of fluid under the transmission before removing the plug to drain the fluid. **Tighten** 12 N·m (106 lb in)
2	Fluid Filler Plug **Note:** • Transmission will require approximately 6.5-7 Litres 7-7.4 quarts of fluid. • Fill the transmission with fluid. Refer to Transmission Fluid Level and Condition Check . **Tighten** 20 N·m (15 lb ft)

&#169© Copyright Chevrolet. All rights reserved

Transmission Fluid Cooler Thermal Bypass Valve Replacement

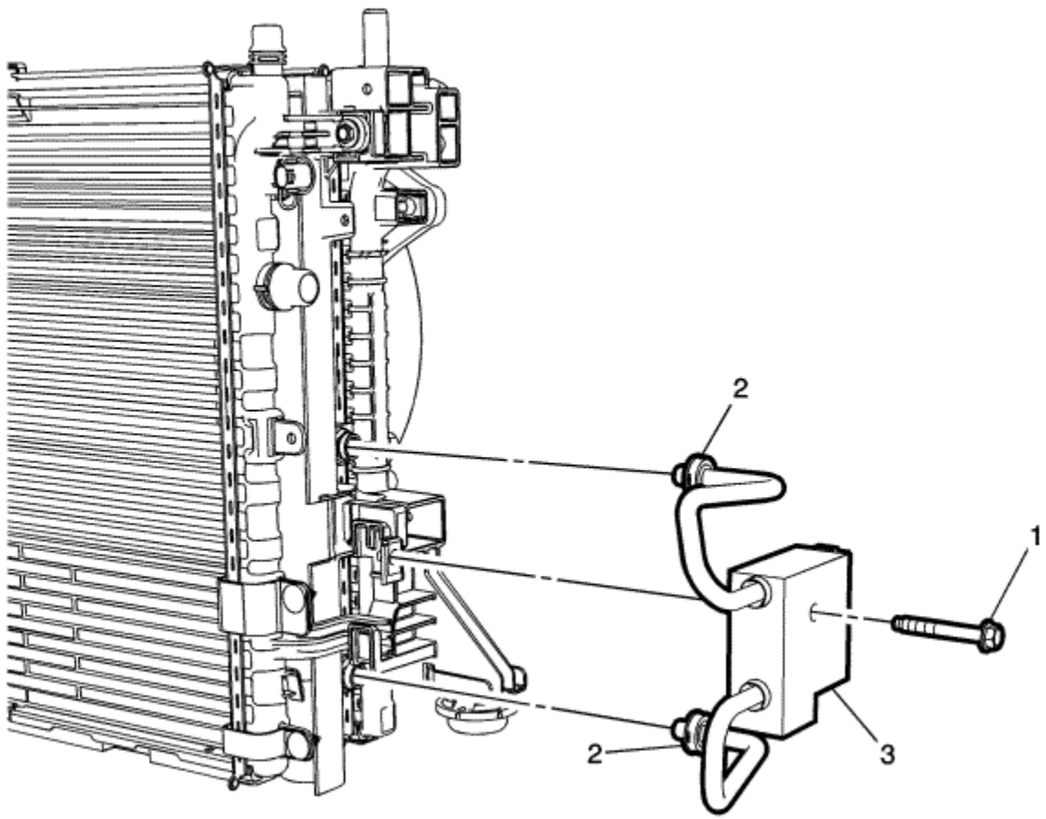

Callout	Component Name

Danger: Do not use a service jack in locations other than those specified to lift this vehicle. Lifting the vehicle with a jack in those other locations could cause the vehicle to slip off the jack and roll; this could cause injury or death.

Preliminary Procedure

1. Raise and support the vehicle. Refer to Lifting and Jacking the Vehicle
2. Remove the front bumper upper fascia. Refer to Front Bumper Upper Fascia Replacement : Volt → Ampera
3. Remove the transmission fluid cooler outlet pipe from thermal bypass valve. Refer to Transmission Fluid Cooler Outlet Pipe Replacement
4. Remove the transmission fluid cooler inlet pipe from thermal bypass valve. Refer to Transmission Fluid Cooler Inlet Pipe Replacement

1	Transmission Fluid Cooler Thermal Bypass Valve Bolt **Caution:** Refer to Fastener Caution in the Preface section. **Tighten** 9 N·m (80 lb in)
2	Transmission Fluid Cooler Thermal Bypass Valve Quick Connect Fitting. **Procedure** Disconnect quick connect fittings from radiator. Refer Transmission Fluid Cooler Hose/Pipe Quick-Connect Fitting Disconnection and Connection
3	Transmission Fluid Cooler Thermal Bypass Valve

© Copyright Chevrolet. All rights reserved

Transmission Fluid Cooler Pipe Connector Replacement - Radiator

For equivalent regional tools, Refer to Special Tools

Removal Procedure

1. Place a drain pan under vehicle.
2. Remove the transmission fluid cooler thermal bypass valve. Refer to Transmission Fluid Cooler Thermal Bypass Valve Replacement .

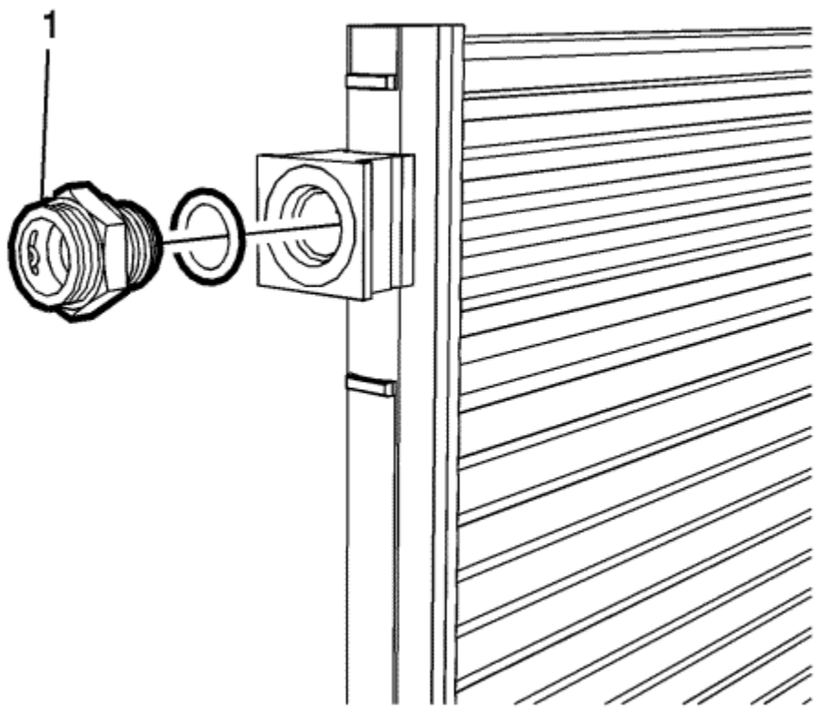

3. Remove the oil cooler fitting (1) from the radiator.

Installation Procedure

1. Inspect the new O-ring seals for cracks, cuts or damage. Replace if necessary.

   Caution: Refer to Fastener Caution in the Preface section.

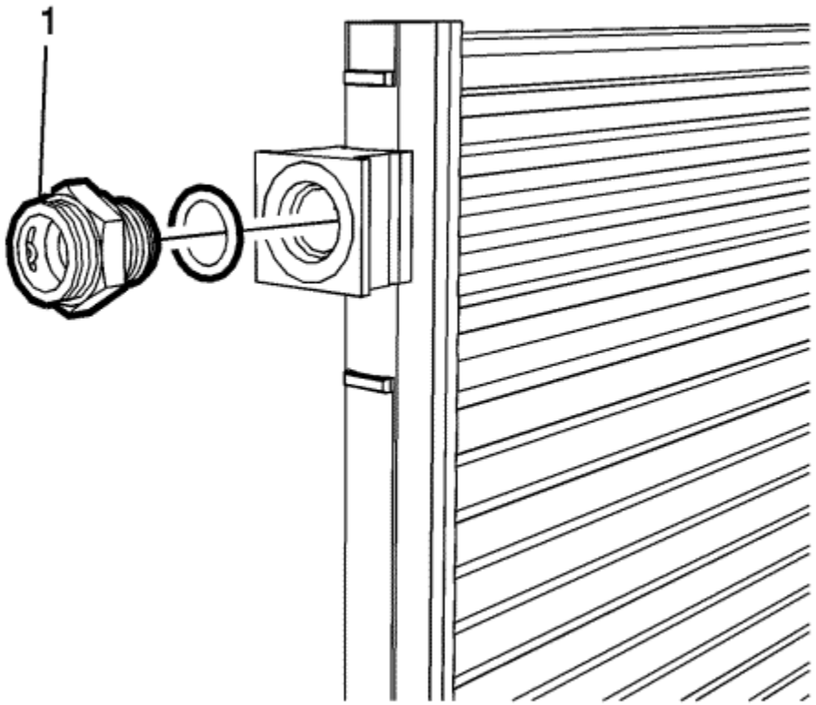

   Note: The correct thread engagement is critical. Cross-threaded fittings can achieve proper tightness and still leak.

2. Install the oil cooler fitting (1) to the radiator and tighten to **38 N·m (28 lb ft)**.
3. Install the transmission fluid cooler thermal bypass valve. Refer to Transmission Fluid Cooler Thermal Bypass Valve Replacement .
4. Adjust the transmission fluid level.
5. Inspect for fluid leaks.

© Copyright Chevrolet. All rights reserved

Transmission Fluid Cooler Hose/Pipe Quick-Connect Fitting Disconnection and Connection

Special Tools

GE-41623 Cooler Quick Connect Tool

For equivalent regional tools, refer to Special Tools .

Removal Procedure

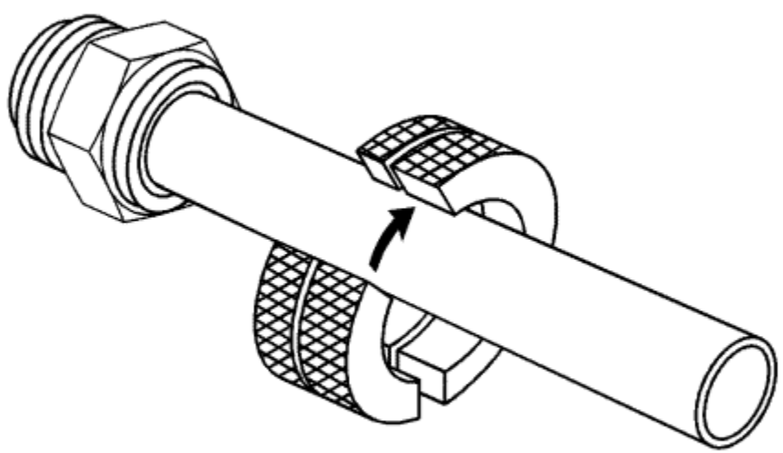

1. Install the *GE-41623* cooler quick connect tool onto the transmission oil cooler (TOC) pipe.

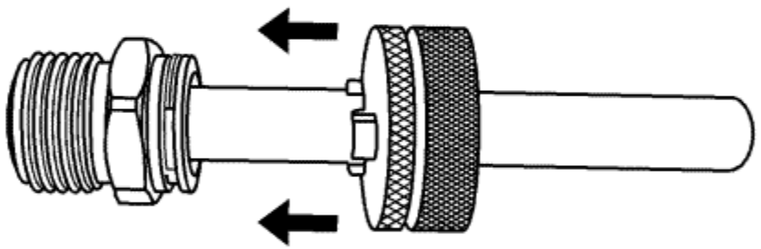

2. Slide the *GE-41623* cooler quick connect tool toward the TOC pipe fitting.

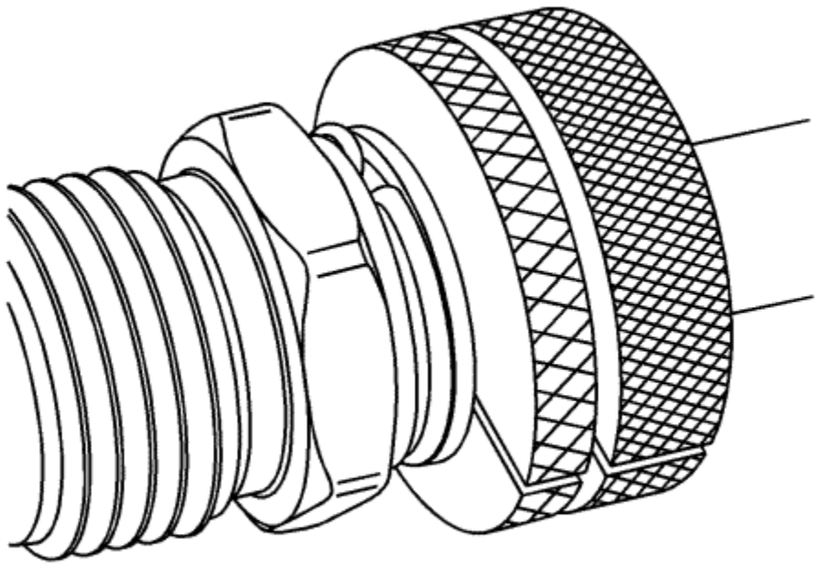

Note: Rotate the *GE-41623* cooler quick connect tool to engage the TOC pipe fitting retainer slots.

The *GE-41623* cooler quick connect tool should be nearly flush with the fitting.

3. Connect the *GE-41623* cooler quick connect tool onto the TOC pipe fitting.

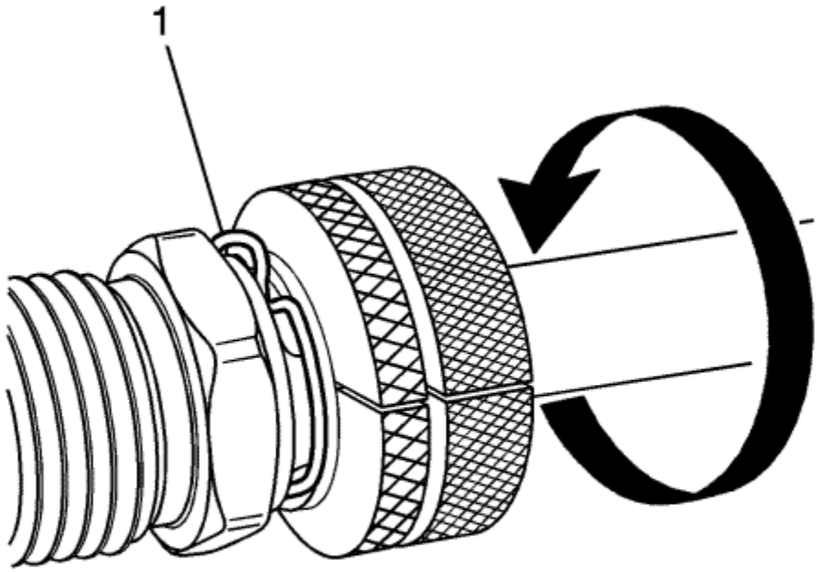

4. Rotate the *GE-41623* cooler quick connect tool until the retainer clip (1) rises above the fitting retainer seat.

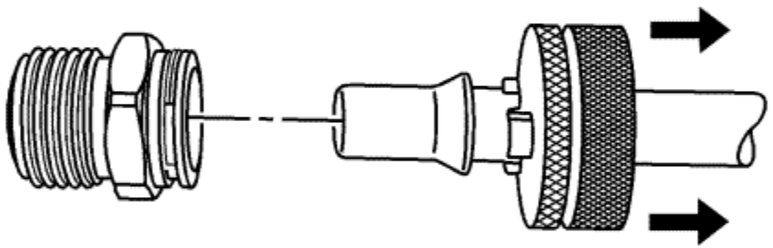

5. Pull back on the TOC pipe to disengage the pipe from the TOC pipe fitting.
6. Remove the *GE-41623* cooler quick connect tool from the TOC pipe.

Installation Procedure

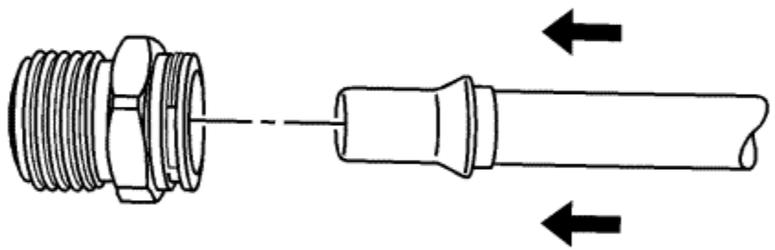

Note: Inspect the TOC pipe fitting and retaining clip for signs of wear or damage. Replace the components if necessary.

1. Install the TOC pipe into the TOC pipe fitting.

   A distinct snap should be heard or felt when assembling the TOC pipe to the fitting.

2. To ensure the cooler line is properly installed, give the cooler pipe a gentle pull.

© Copyright Chevrolet. All rights reserved

Transmission Fluid Auxiliary Cooler Replacement

Removal Procedure

1. Remove the air conditioning condenser. Refer to Air Conditioning Condenser Replacement .
2. Remove the transmission fluid cooler thermal bypass valve. Refer to Transmission Fluid Cooler Thermal Bypass Valve Replacement .

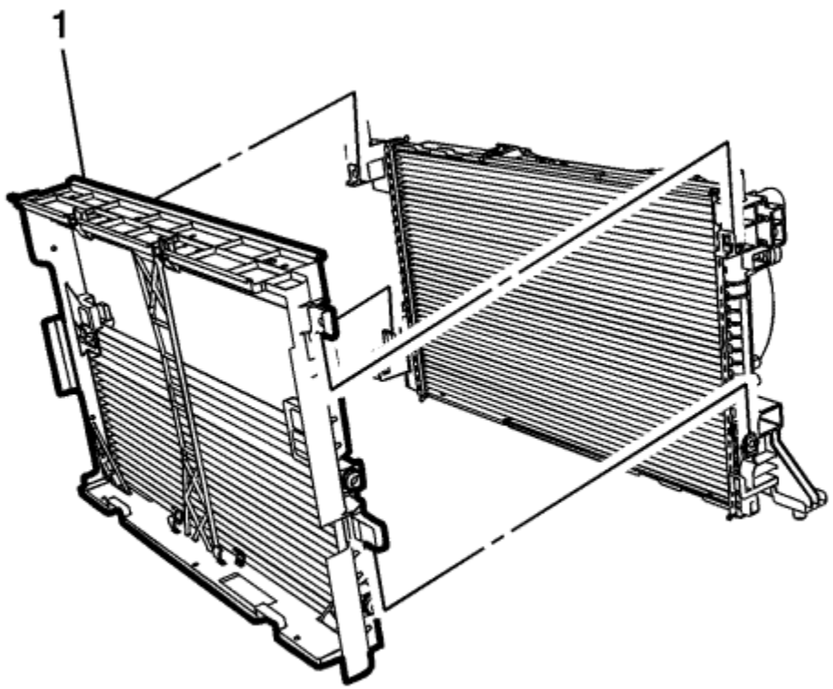

3. Remove the air conditioning condenser bracket (1) from the radiator.

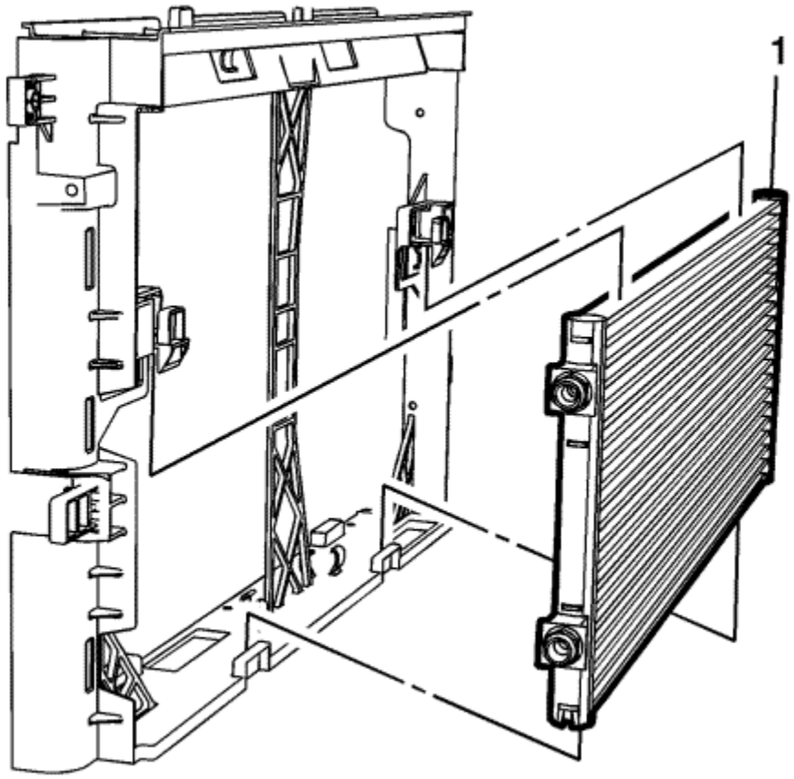

Note: Depress tabs to release transmission fluid auxiliary cooler from the air conditioning condenser bracket.

4. Remove the transmission fluid auxiliary cooler (1) from the air conditioning condenser bracket.

Installation Procedure

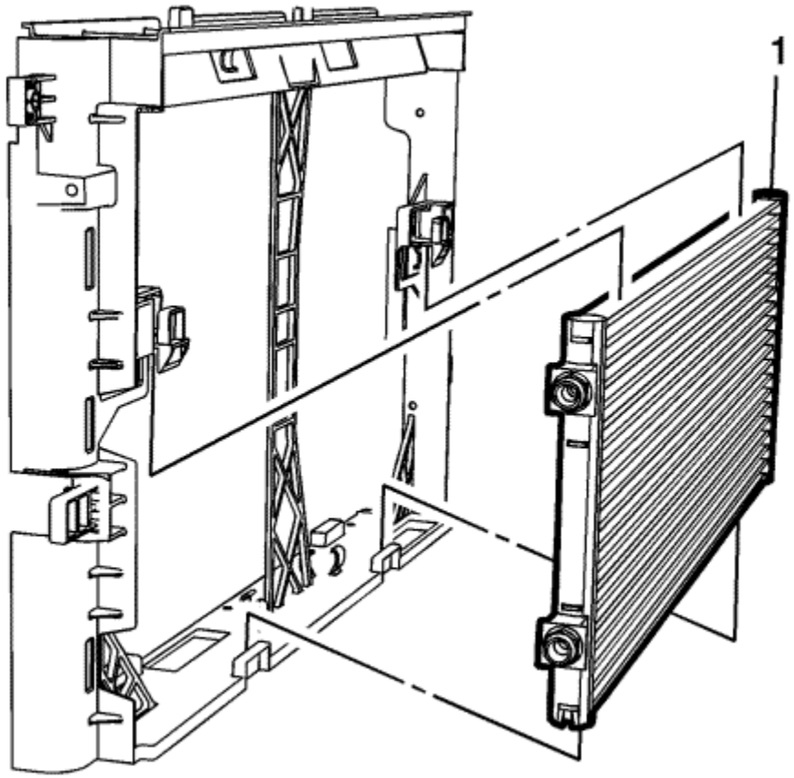

Note: Depress tabs to install transmission fluid auxiliary cooler to the air conditioning condenser bracket.

1. Install the transmission fluid auxiliary cooler (1) to the air conditioning condenser bracket.

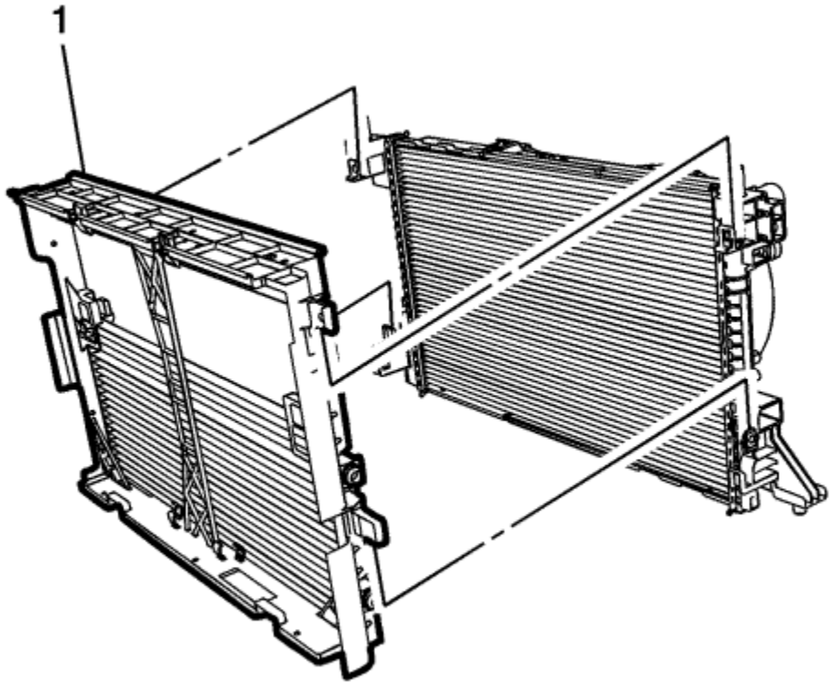

2. Install the air conditioning condenser bracket (1) to the radiator.
3. Install the transmission fluid cooler thermal bypass valve. Refer to Transmission Fluid Cooler Thermal Bypass Valve Replacement .
4. Install the air conditioning condenser. Refer to Air Conditioning Condenser Replacement .

© Copyright Chevrolet. All rights reserved

Transmission Fluid Cooler Outlet Pipe Replacement

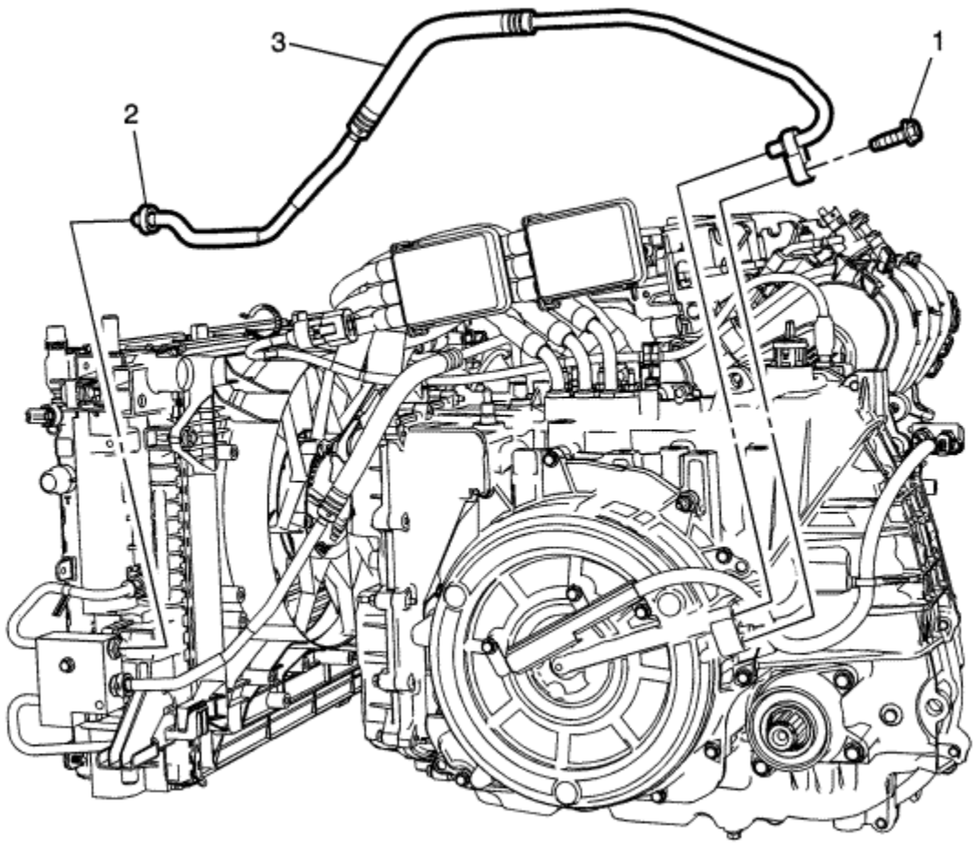

Callout	Component Name
Danger: Always perform the High Voltage Disabling procedure prior to servicing any High Voltage component or connection. Personal Protection Equipment (PPE) and proper procedures must be followed. The High Voltage Disabling procedure will perform the following tasks: Identify how to disable high voltage.	

-
- Identify how to test for the presence of high voltage.
- Identify condition under which high voltage is always present and personal protection equipment (PPE) and proper procedures must be followed.

Failure to follow the procedures exactly as written may result in serious injury or death.

Preliminary Procedure

1. Disable hybrid high voltage system. Refer to High Voltage Disabling and High Voltage Enabling .
2. Remove the drive motor generator power inverter module. Refer to Drive Motor Generator Power Inverter Module Replacement .
3. Remove the front wheelhouse front liner on the driver side. Refer to Front Wheelhouse Front Liner Replacement .

1	Transmission Fluid Cooler Outlet Pipe Bolt **Caution:** Refer to Fastener Caution in the Preface section. **Tighten** 22 N·m (16 lb ft)
2	Transmission Fluid Cooler Outlet Pipe Quick Connect Fitting **Procedure** Disconnect the transmission pipe from the transmission fluid cooler thermal bypass valve quick connect fitting. Refer to Transmission Fluid Cooler Hose/Pipe Quick-Connect Fitting Disconnection and Connection .
3	Transmission Fluid Cooler Outlet Pipe

&#169© Copyright Chevrolet. All rights reserved

Transmission Fluid Cooler Inlet Pipe Replacement

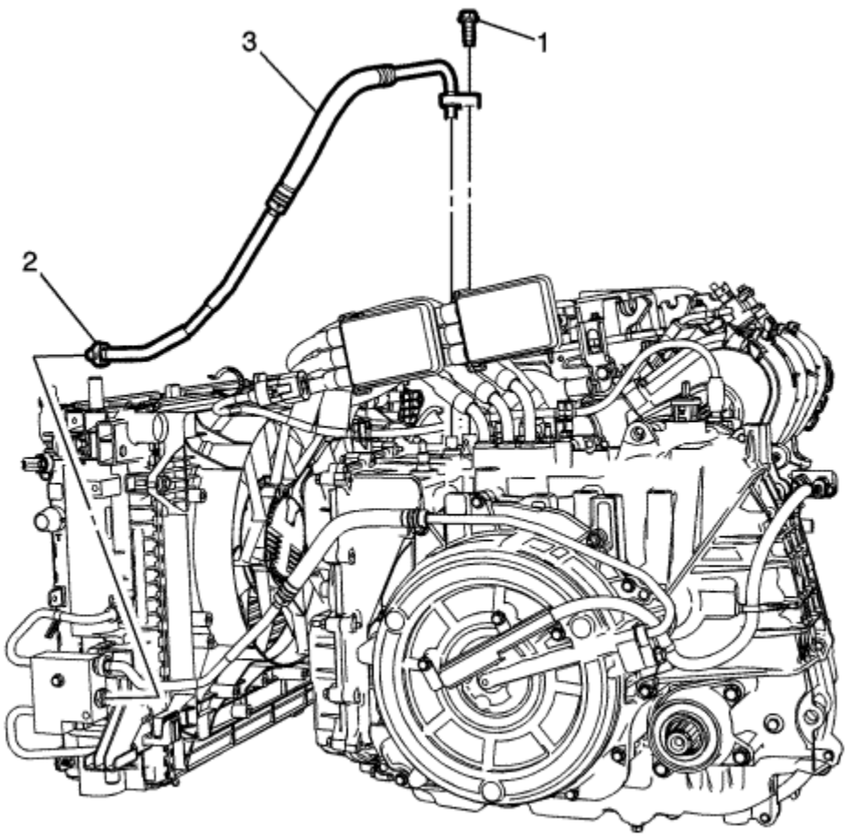

Callout	Component Name
Danger: Always perform the High Voltage Disabling procedure prior to servicing any High Voltage component or connection. Personal Protection Equipment (PPE) and proper procedures must be followed. The High Voltage Disabling procedure will perform the following tasks: Identify how to disable high voltage.	

-
- Identify how to test for the presence of high voltage.
- Identify condition under which high voltage is always present and personal protection equipment (PPE) and proper procedures must be followed.

Failure to follow the procedures exactly as written may result in serious injury or death.

Preliminary Procedure

1. Disable hybrid high voltage system. Refer to High Voltage Disabling and High Voltage Enabling
2. Remove the drive motor generator power inverter module. Refer to Drive Motor Generator Power Inverter Module Replacement
3. Remove the front wheelhouse front liner on the driver side. Refer to Front Wheelhouse Front Liner Replacement

1	Transmission Fluid Cooler Inlet Pipe Bolt **Caution:** Refer to Fastener Caution in the Preface section. **Tighten** 22 N·m (16 lb ft)
2	Transmission Fluid Cooler Inlet Pipe Quick Connect Fitting **Procedure** Disconnect the transmission pipe from the transmission fluid cooler thermal bypass valve quick connect fitting. Refer to Transmission Fluid Cooler Hose/Pipe Quick-Connect Fitting Disconnection and Connection
3	Transmission Fluid Cooler Inlet Pipe

&#169© Copyright Chevrolet. All rights reserved

Automatic Transmission Fluid Pressure Test Hole Plug Replacement

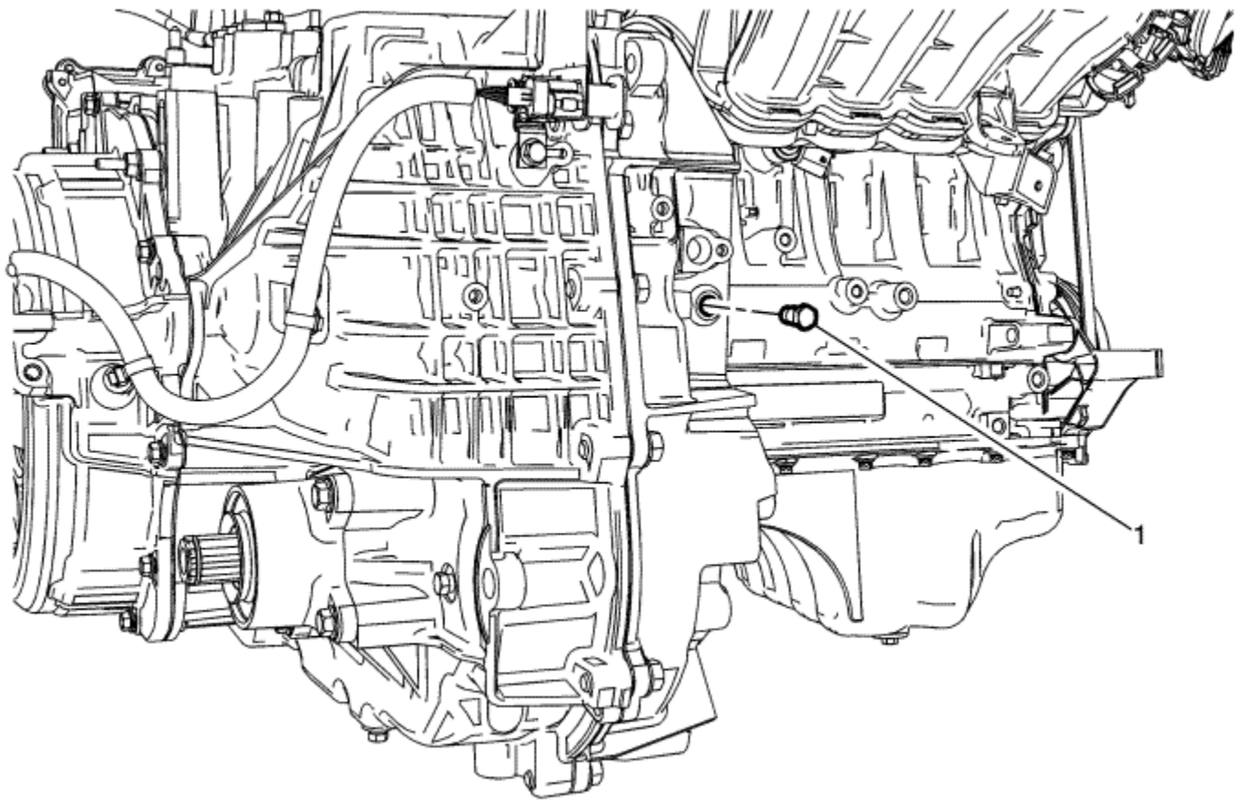

Callout	Component Name
Preliminary Procedure Raise the vehicle. Refer to Lifting and Jacking the Vehicle .	
	Fluid Pressure Test Plug

1	**Caution:** Refer to Fastener Caution in the Preface section. **Tighten** 12 N·m (106 lb in)

© Copyright Chevrolet. All rights reserved

Front Wheel Drive Shaft Seal Replacement - Left Side

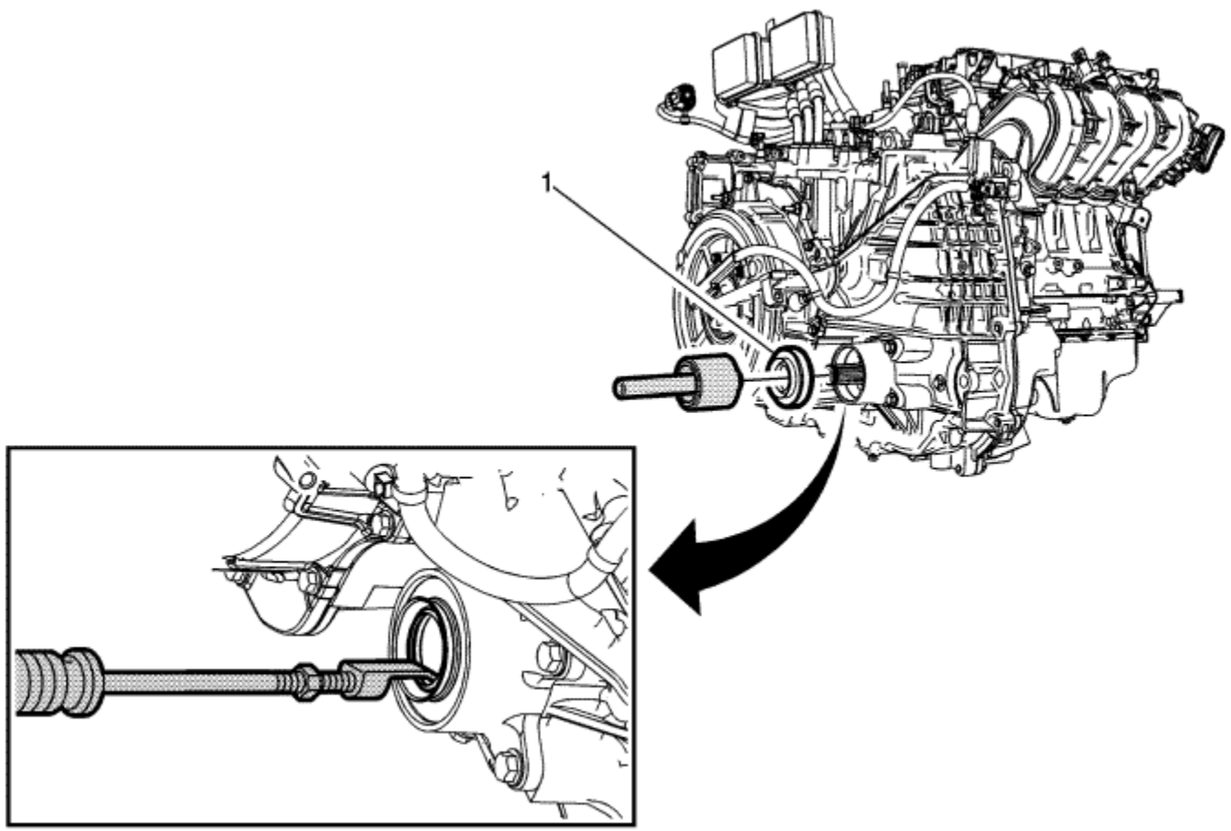

Callout	Component Name

Danger: Do not use a service jack in locations other than those specified to lift this vehicle. Lifting the vehicle with a jack in those other locations could cause the vehicle to slip off the jack and roll; this could cause injury or death.

Preliminary Procedures

1. Raise the vehicle. Refer to Lifting and Jacking the Vehicle .
2. Remove the left wheel drive shaft. Refer to Front Wheel Drive Shaft Replacement .

1	Left Front Wheel Drive Shaft Oil Seal **Note:** • For seal removal use *GE-6125-1B* Slide Hammer with Adaptor. with *GE-23129* Universal Seal Remover . • For seal installation use *GE-8092* Driver Handle with *DT-50301* Seal Installer . **Special Tools** • *DT-50301* Seal Installer • *GE-6125-1B* Slide Hammer with Adaptor • *GE-8092* Driver Handle • *GE-23129* Universal Seal Remover For equivalent regional tools, refer to Special Tools .

&#169© Copyright Chevrolet. All rights reserved

Front Wheel Drive Shaft Seal Replacement - Right Side

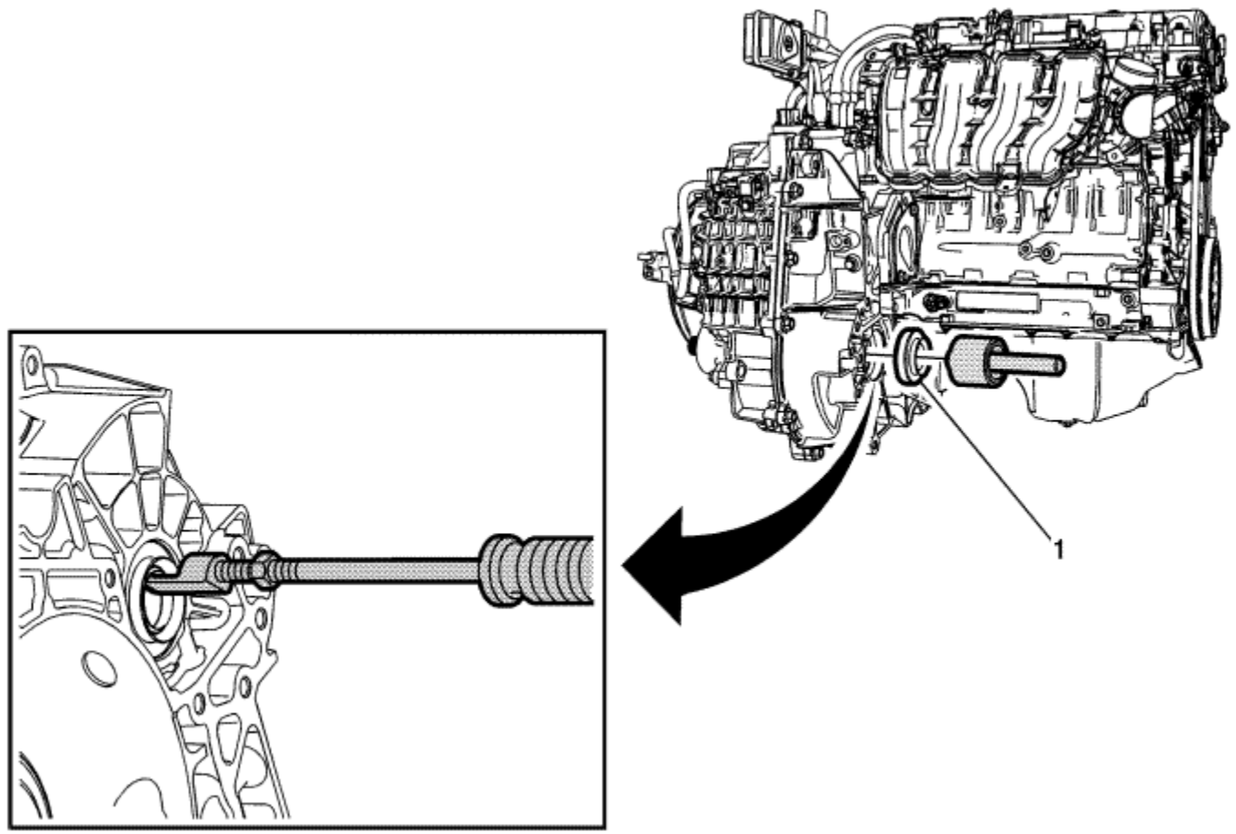

Callout	Component Name

Danger: Do not use a service jack in locations other than those specified to lift this vehicle. Lifting the vehicle with a jack in those other locations could cause the vehicle to slip off the jack and roll; this could cause injury or death.

Preliminary Procedures

1. Raise the vehicle. Refer to Lifting and Jacking the Vehicle .
2. Remove the intermediate drive shaft. Refer to Front Wheel Drive Intermediate Shaft Replacement .

1	Right Front Wheel Drive Shaft Oil Seal **Note:** • For seal removal use *GE-6125-1B* Slide Hammer with Adaptor. with *GE-23129* Universal Seal Remover . • For seal installation use *GE-8092* Driver Handle with *DT-50301* Seal Installer . **Special Tools** • *GE-6125-1B* Slide Hammer with Adaptor • *GE-8092* Driver Handle • *GE-23129* Universal Seal Remover • *DT-50301* Seal Installer For equivalent regional tools, refer to Special Tools .

&#169© Copyright Chevrolet. All rights reserved

Manual Shift Shaft Position Switch Replacement

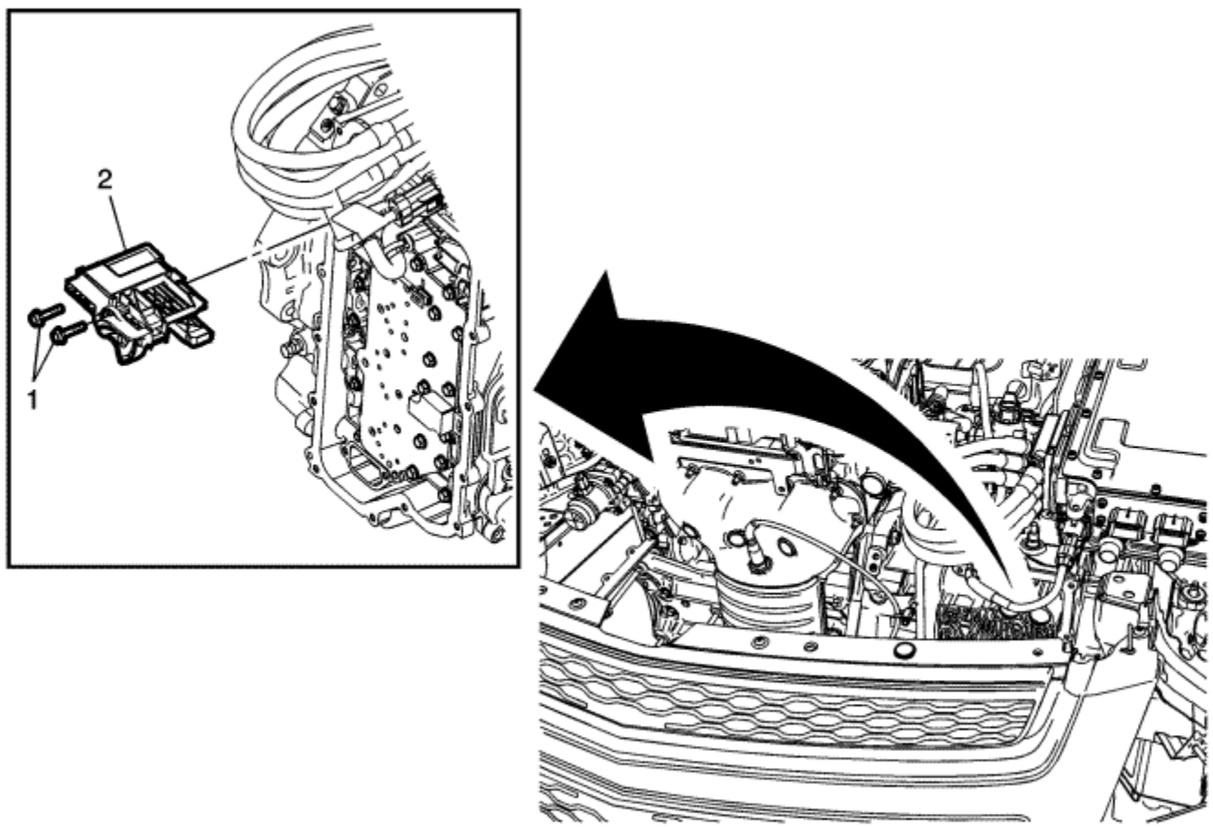

Callout	Component Name
Preliminary Procedures	

1. Remove the control valve body cover. Refer to Control Valve Body Cover Replacement .
2. Disconnect the neutral switch electrical and reposition harness as necessary.
3. Adjust the switch as follows:

3.1. Set the transmission range to Neutral.
3.2. Loosen position switch bolts, they are slotted.
3.3. Lock the switch in the Neutral position by engaging the switch locking lever. The lever will only engage if in the Neutral position.
3.4. Tighten the switch bolts.
3.5. Disengage the switch lock lever and place the transmission in Park.

1	A/Trans Manual Shift Shaft Position Switch Bolt M6 x 25 mm (Qty: 2) **Caution:** Refer to Fastener Caution in the Preface section. **Tighten** 9 N·m (80 lb in)
2	A/Trans Manual Shift Shaft Position Switch Assembly

© Copyright Chevrolet. All rights reserved

Control Valve Body Cover Replacement

Removal Procedure

1. Disconnect the negative battery cable. Refer to Battery Negative Cable Disconnection and Connection .
2. Disable the high voltage system. Refer to High Voltage Disabling .

   Danger: Do not use a service jack in locations other than those specified to lift this vehicle. Lifting the vehicle with a jack in those other locations could cause the vehicle to slip off the jack and roll; this could cause injury or death.

3. Remove the drive motor battery radiator surge tank. Refer to Drive Motor Battery Radiator Surge Tank Replacement .
4. Raise and support the vehicle. Refer to Lifting and Jacking the Vehicle .
5. Drain the transmission. Refer to Transmission Fluid Replacement .
6. Disconnect the transmission auxiliary fluid pump wire retainer from the upper retaining stud on the control valve body cover.

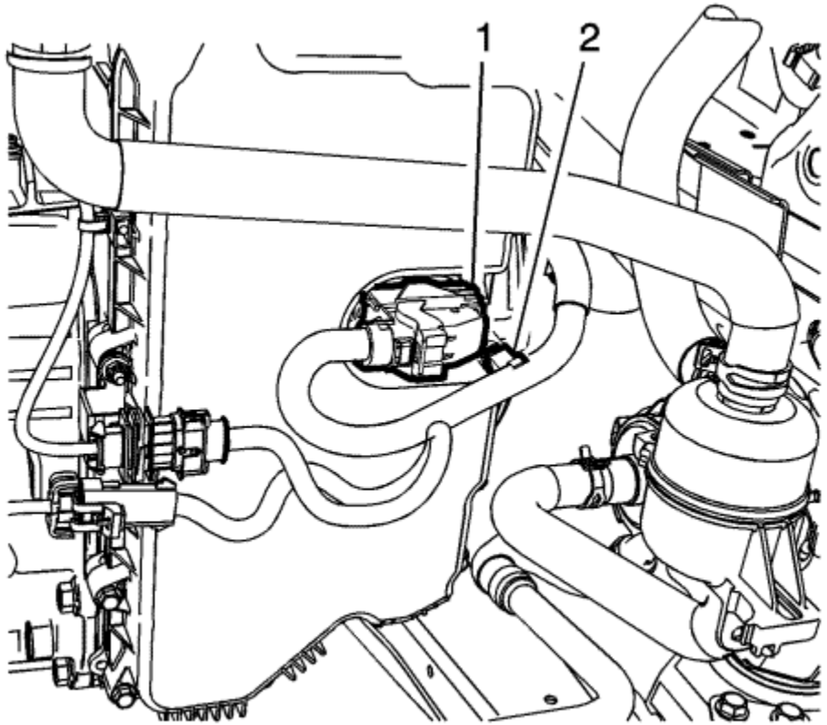

7. Remove the wire harness retainer (2) from the control valve body cover stud, if fitted.
8. Disconnect the control valve body transmission control module (TCM) electrical connector (1).

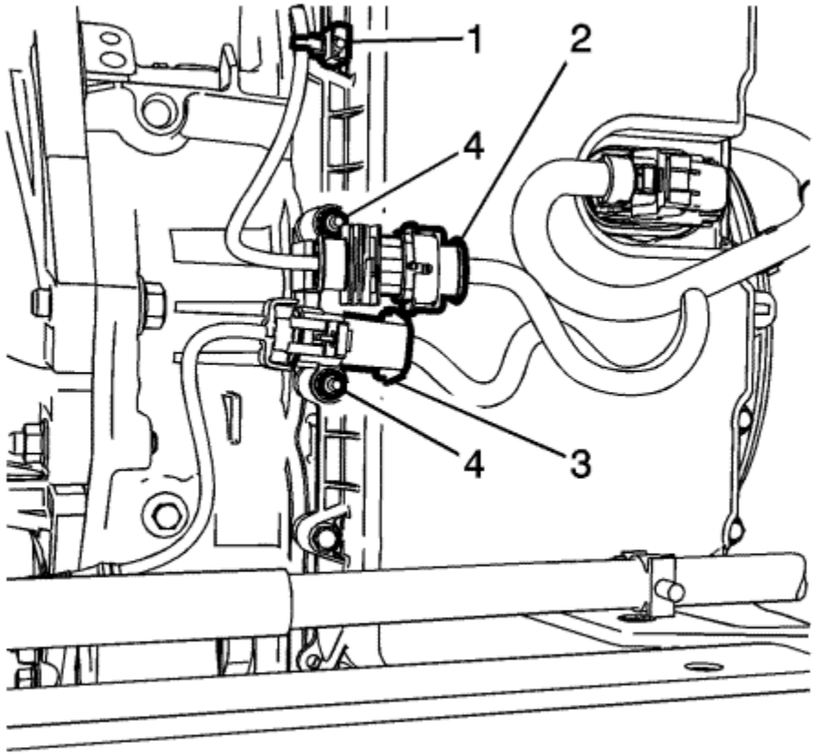

9. Disconnect the heated oxygen sensor wire retainer (1) from the control valve body cover stud.
10. Disconnect the heated oxygen sensor connectors (2, 3).
11. Remove the connector bracket retaining fasteners (4).
12. Position bracket away from the control valve body cover.

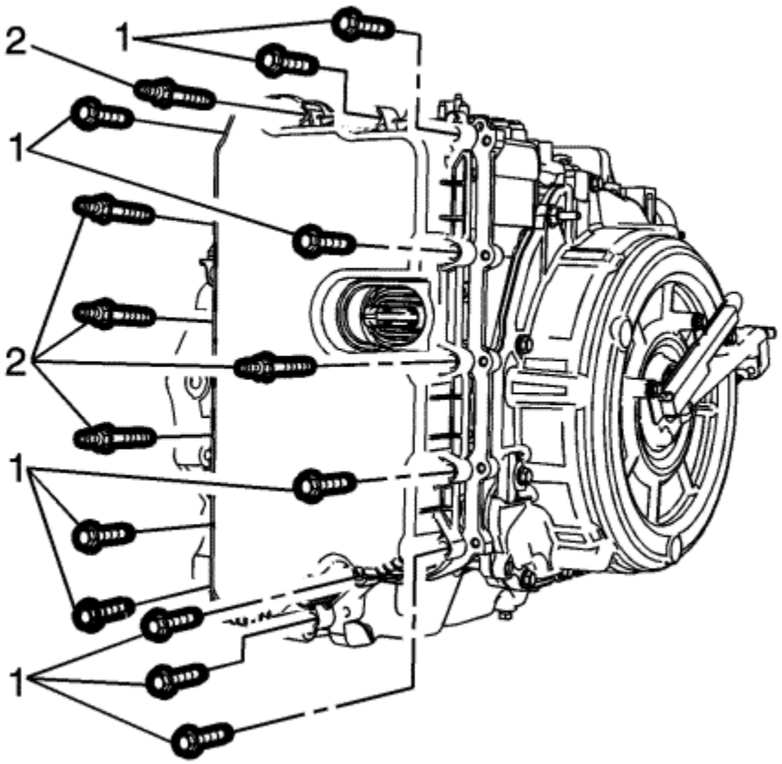

13. Remove the 14 control valve body cover fasteners (1,2).
14. Remove the control valve body cover.
15. Remove the control valve body cover gasket, if necessary.

    Caution: Support the control solenoid valve assembly around the connector when removing the seal. Excessive pulling force can damage the internal electrical connections.

16. Remove the control valve body cover wiring connector hole seal, If necessary.
17. Remove all traces of the old gasket material. Clean the transmission case and control valve body cover gasket surfaces.

Installation Procedure

1. Install the control valve body cover wiring connector hole seal, if removed.
2. Install the control valve body cover gasket to the control valve body cover, if removed.
3. Install the control valve body cover.

   Caution: Refer to Fastener Caution in the Preface section.

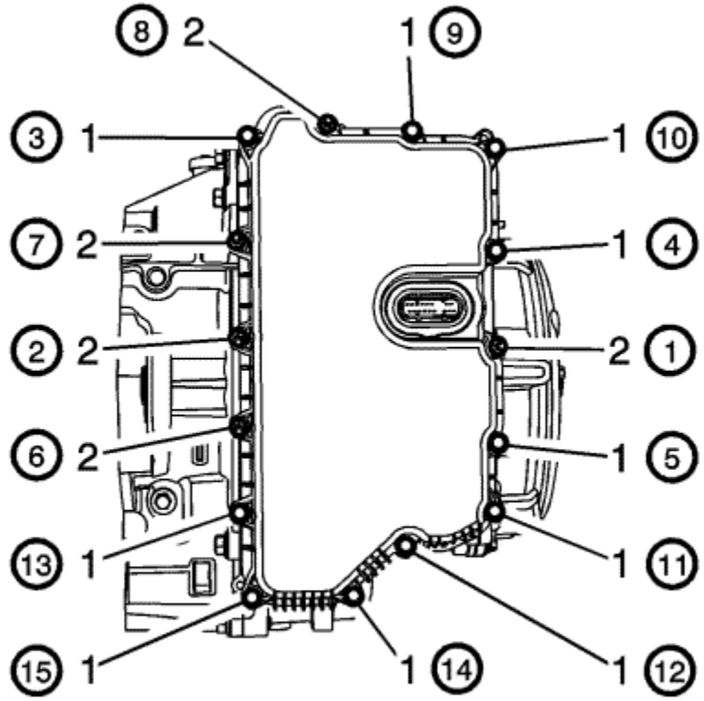

Note: Install all control valve body cover bolts and studs by hand then torque all bolts and studs in the sequence shown.

4. Tighten the 14 control valve body cover fasteners in the sequence shown to **9 N·m (80 lb in)**.

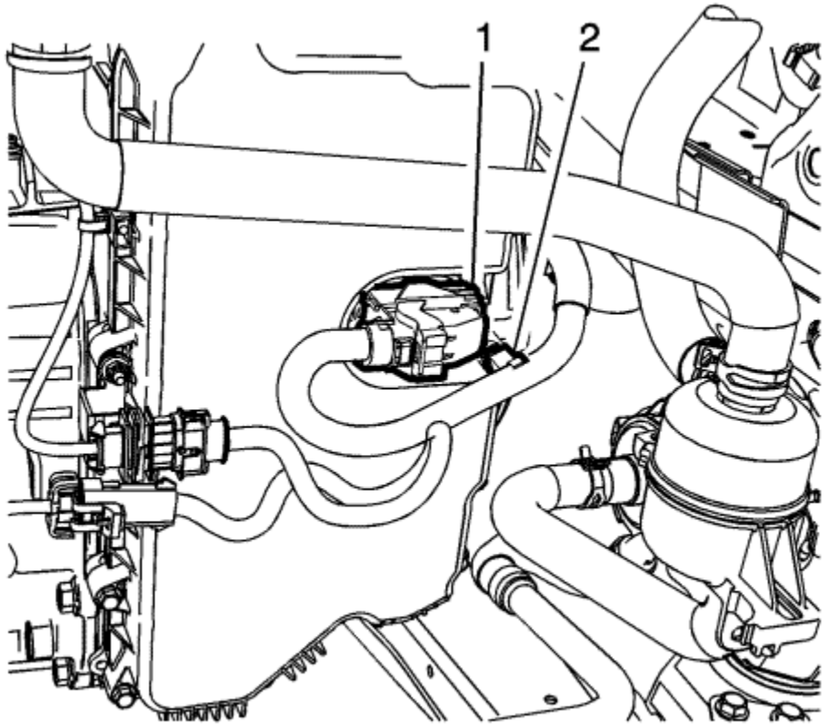

5. Connect the control valve body TCM electrical connector (1).
6. Install the wire harness retainer (2) to the control valve body cover stud.
7. Connect the transmission auxiliary fluid pump wire retainer to the upper retaining stud on the control valve body cover.

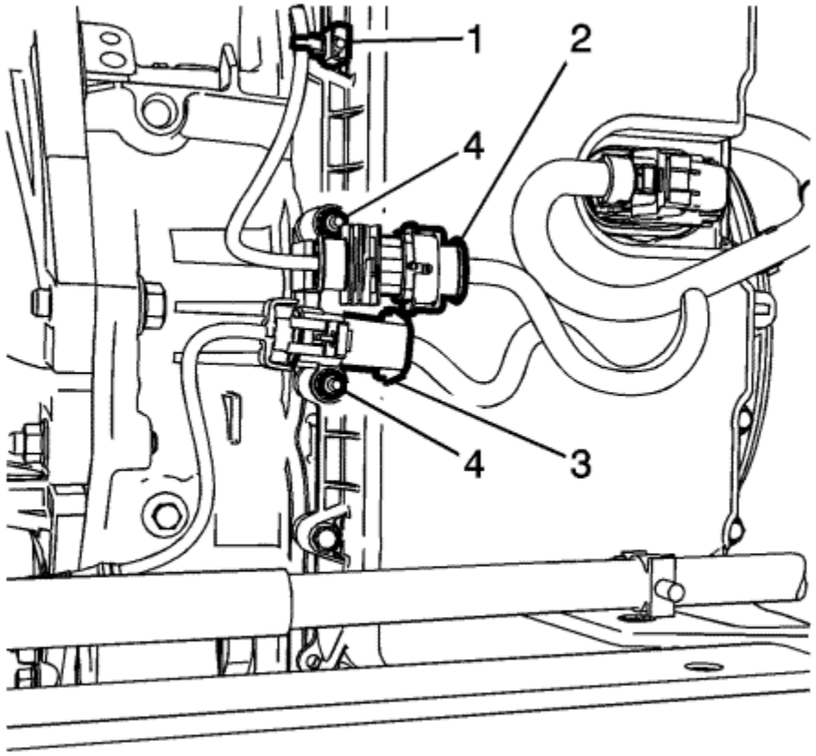

8. Connect the heated oxygen sensor wire retainer (1) to the control valve body cover stud.
9. Position bracket on the control valve body cover studs.
10. Install the connector bracket retaining fasteners (4), Then tighten the fasteners (4) to **9 N·m (80 lb in)**.
11. Connect the heated oxygen sensor connectors (2, 3).
12. Lower the vehicle.
13. Fill the transmission. Refer to Transmission Fluid Replacement .
14. Install the drive motor battery radiator surge tank. Refer to Drive Motor Battery Radiator Surge Tank Replacement .
15. Enable the high voltage system. Refer to High Voltage Enabling .
16. Connect the negative battery cable. Refer to Battery Negative Cable Disconnection and Connection .
17. Check for leaks.

© Copyright Chevrolet. All rights reserved

Control Valve Body Replacement

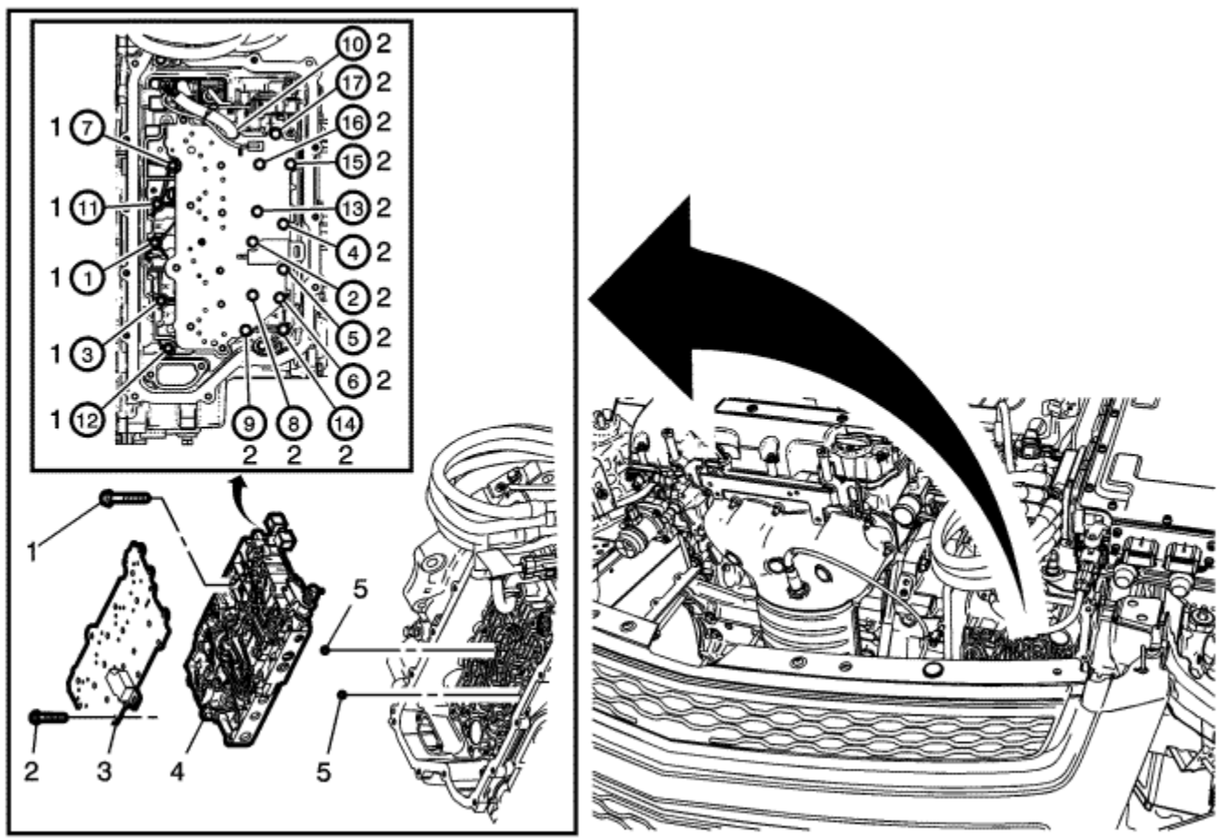

Callout	Component Name

Preliminary Procedures

1. Remove the control solenoid valve and transmission control module assembly. Refer to Control Solenoid Valve and Transmission Control Module Assembly Replacement .
2. For removal of the manual shift shaft position switch, refer to Manual Shift Shaft Position Switch and Fluid Level Control Valve Removal .

3. For installation of the manual shift shaft position switch, refer to Manual Shift Shaft Position Switch and Fluid Level Control Valve Installation .

1	Control Valve Body Bolt M6 x 42 mm (Qty: 5) **Caution:** Refer to Fastener Caution in the Preface section. **Procedure** Tighten the bolts in the sequence shown. **Tighten** 10 N·m (89 lb in)
2	Control Valve Body Bolt M6 x 48 mm (Qty: 12) **Procedure** Tighten the bolts in the sequence shown. **Tighten** 10 N·m (89 lb in)
3	Control Valve Channel Plate Assembly
4	Control Valve Body
5	Control Valve Body Ball Check Valve (Qty: 2)

© Copyright Chevrolet. All rights reserved

Control Solenoid Valve and Transmission Control Module Assembly Replacement

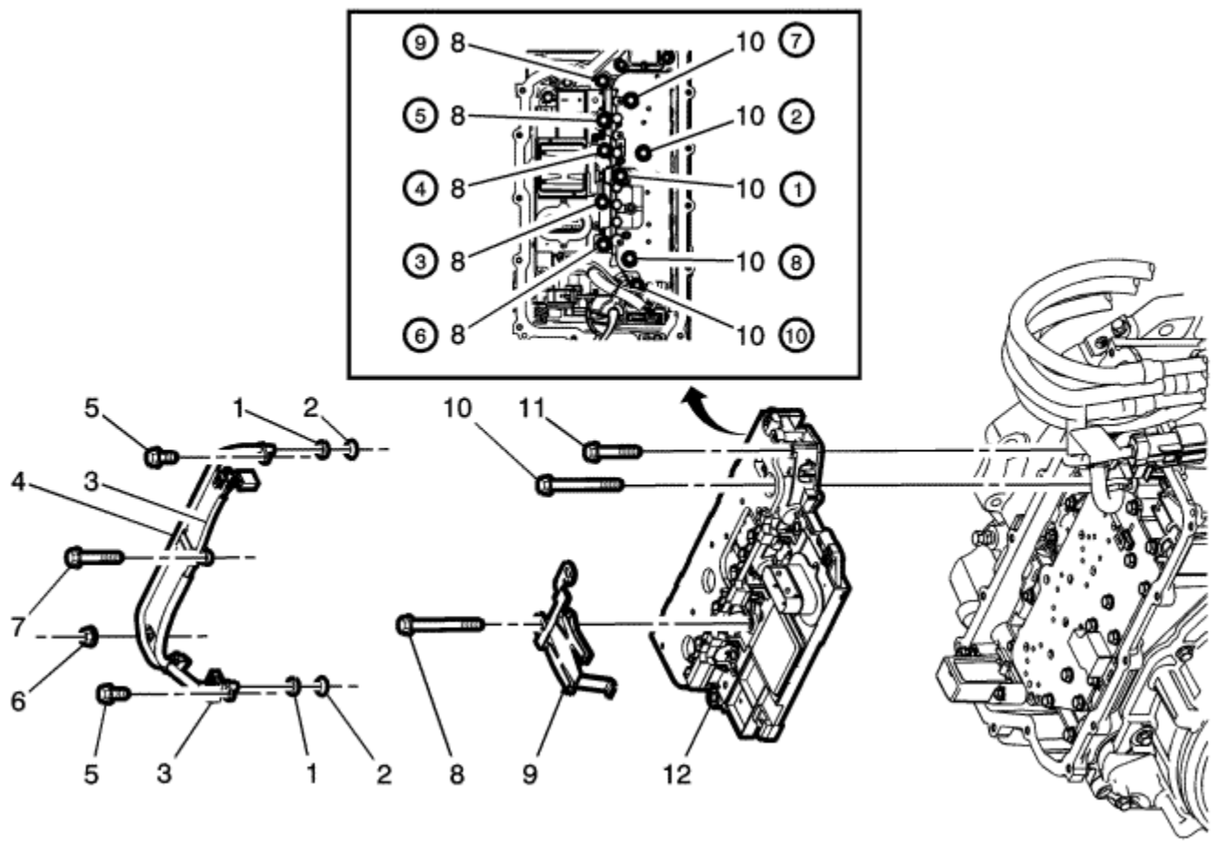

Callout	Component Name
Preliminary Procedure **Danger:** Always perform the High Voltage Disabling procedure prior to servicing any High Voltage component or connection. Personal Protection Equipment (PPE) and proper procedures must be followed.	

The High Voltage Disabling procedure will perform the following tasks:

- Identify how to disable high voltage.
- Identify how to test for the presence of high voltage.
- Identify condition under which high voltage is always present and personal protection equipment (PPE) and proper procedures must be followed.

Failure to follow the procedures exactly as written may result in serious injury or death.

Remove the control valve body cover. Refer to Control Valve Body Cover Replacement .

1	Transmission Fluid Cooler Outlet Washer
2	Transmission Fluid Cooler Outlet Seal **Tip** Install a NEW seal. It is not reusable.
3	A/Trans Wiring Extension Harness Assembly **Procedure** Make sure you connect all four connectors on the wiring harness in the appropriate locations. **Tip** The wiring harness is attached to the fluid cooler outlet pipe and they will come out together.
4	Transmission Fluid Cooler Outlet Pipe Assembly
5	Fluid Cooler Outlet Pipe Assembly Bolt M5 x 16 mm (Qty: 2) **Caution:** Refer to Fastener Caution in the Preface section. **Tighten** 7.25 N·m (64.2 lb in)
6	Transmission Fluid Cooler Pipe Nut **Tighten** 9 N·m (80 lb in)
7	Control Valve Body Bolt M6 x 80 mm (Qty: 1) **Tighten** 9.5 N·m (84 lb in)
	Control Valve Body Bolt M6 x 65 mm (Qty: 5) **Procedure**

8	Tighten the bolt in sequence shown. **Tighten** 9.5 N·m (84 lb in)
9	Control Solenoid Valve Spring
10	Control Valve Body Bolt M6 x 75 mm (Qty: 4) **Procedure** Tighten the bolt in sequence shown. **Tighten** 9.5 N·m (84 lb in)
11	Control Valve Body Bolt M6 x 42 mm (Qty: 1) **Tighten** 9.5 N·m (84 lb in)
12	Control Solenoid (w/Body and TCM) TEHCM Valve Assembly **Procedure** Program the control solenoid valve and transmission control module assembly. Refer to Control Solenoid Valve and Transmission Control Module Assembly Programming and Setup : 4ET50 .

&#169© Copyright Chevrolet. All rights reserved

Transmission Mount Bracket Replacement - Rear

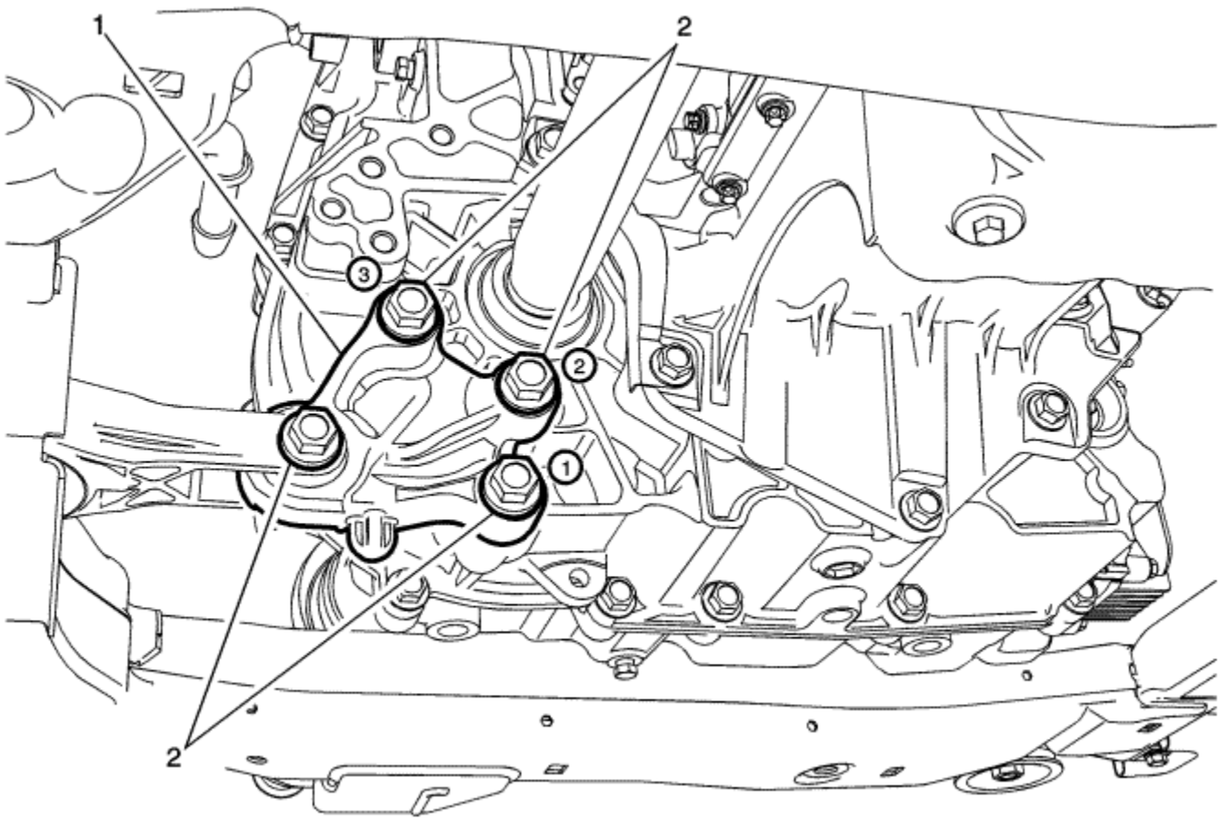

Callout	Component Name
Preliminary Procedure Remove the catalytic converter pipe. Refer to Catalytic Converter Replacement .	
1	Transmission Mount Bracket
	Fastener (Qty: 4)

	Caution: Refer to Component Fastener Tightening Caution in the Preface section.
2	**Tip** Tighten the bracket to transmission fasteners in the sequence as shown. **Tighten** 100 N·m (74 lb ft)

© Copyright Chevrolet. All rights reserved

Transmission Mount Transmission-Side Bracket Replacement

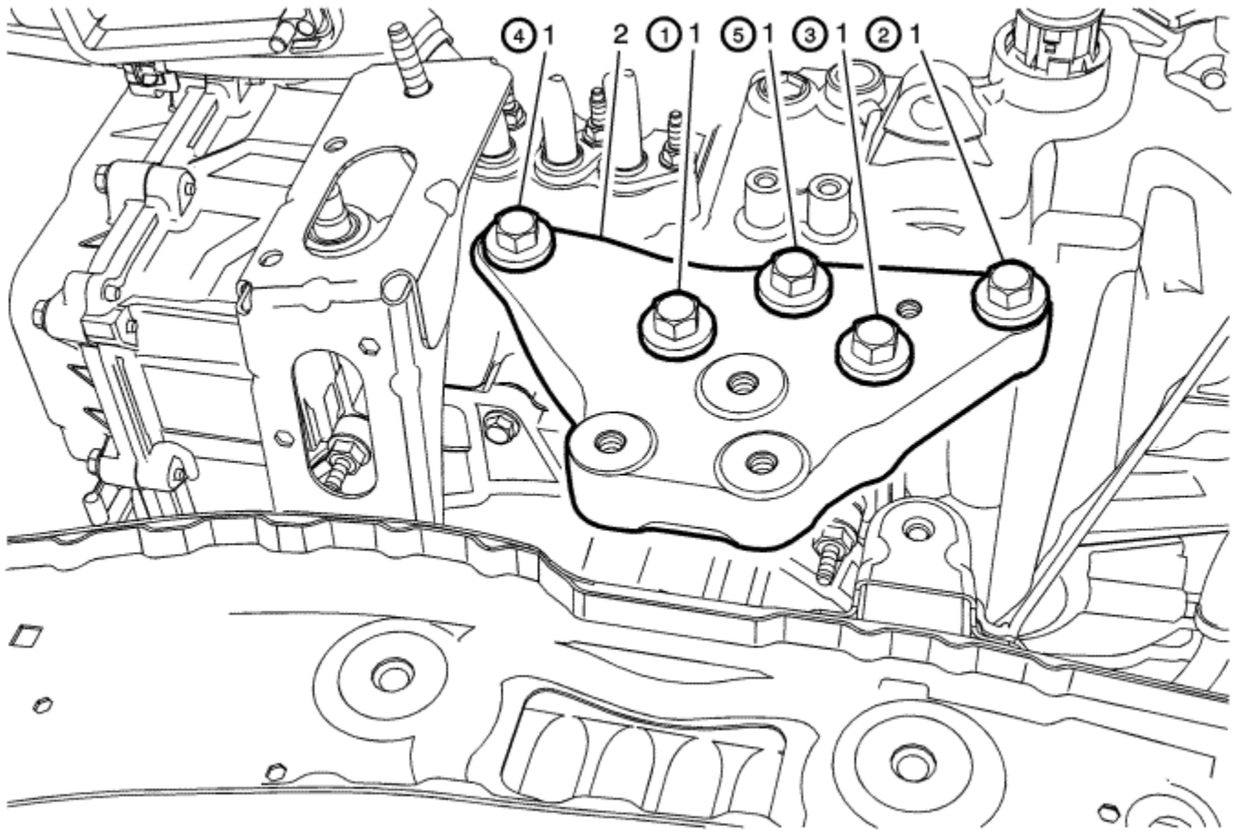

Callout	Component Name
Danger: Always perform the High Voltage Disabling procedure prior to servicing any High Voltage component or connection. Personal Protection Equipment (PPE) and proper procedures must be followed. The High Voltage Disabling procedure will perform the following tasks: Identify how to disable high voltage.	

-
- Identify how to test for the presence of high voltage.
- Identify condition under which high voltage is always present and personal protection equipment (PPE) and proper procedures must be followed.

Failure to follow the procedures exactly as written may result in serious injury or death.

Preliminary Procedures

1. Remove the left transmission mount from the vehicle. Refer to Transmission Mount Replacement - Left Side .
2. Remove the range selector lever cable bracket. Refer to Range Selector Lever Cable Bracket Replacement .

1	Fastener (Qty: 5) **Caution:** Refer to Component Fastener Tightening Caution in the Preface section. **Caution:** This component is equipped with torque-to-yield fasteners. Install a NEW torque-to-yield fastener when installing this component. Failure to replace the torque-to-yield fastener could cause damage to the vehicle or component. **Procedure** Tighten in the sequence shown. DO NOT reuse the bolts. Discard and replace with NEW bolts only. **Tighten** 50 N·m (37 lb ft) plus 50 degrees
2	Transmission Side Bracket

&#169© Copyright Chevrolet. All rights reserved

Transmission Mount Replacement - Left Side

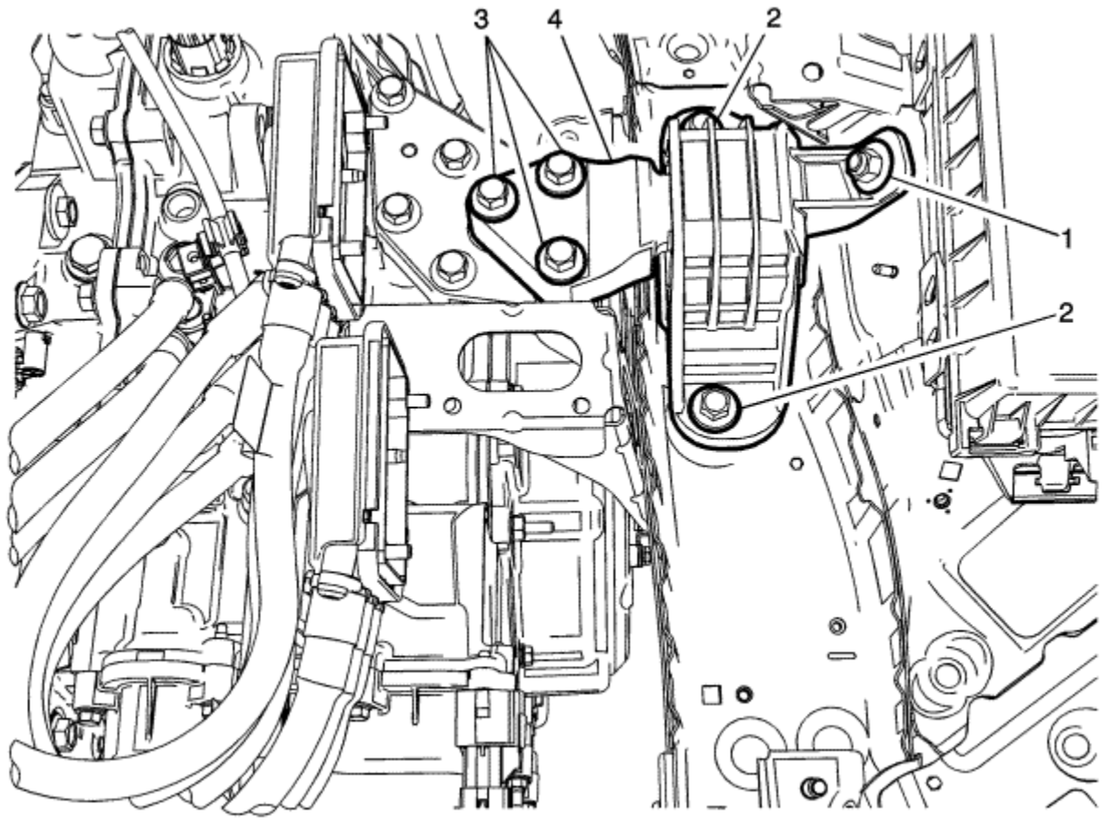

Callout	Component Name
Danger: Always perform the High Voltage Disabling procedure prior to servicing any High Voltage component or connection. Personal Protection Equipment (PPE) and proper procedures must be followed. The High Voltage Disabling procedure will perform the following tasks: Identify how to disable high voltage.	

-
- Identify how to test for the presence of high voltage.
- Identify condition under which high voltage is always present and personal protection equipment (PPE) and proper procedures must be followed.

Failure to follow the procedures exactly as written may result in serious injury or death.

Preliminary Procedures

1. Remove the drive motor generator power inverter module from the vehicle. Refer to Drive Motor Generator Power Inverter Module Replacement .
2. Install the engine support fixture. Refer to Engine Support Fixture .
3. Prior to removing the mount, mark the mount location using spray paint or a marker for correct positioning during installation.

1	Nut (Qty: 1) **Caution:** Refer to Component Fastener Tightening Caution in the Preface section. **Caution:** This component is equipped with torque-to-yield fasteners. Install a NEW torque-to-yield fastener when installing this component. Failure to replace the torque-to-yield fastener could cause damage to the vehicle or component. **Tighten** 50 N·m (37 lb ft)
2	Bolt (Qty: 2) **Tighten** 58 N·m (43 lb ft)
3	Bolt (Qty: 3) **Tip** DO NOT reuse the bolts. Discard and replace with NEW bolts only. **Tighten** • First pass: 100 N·m (74 lb ft) • Final pass: additional 90-105 degrees
4	Left Transmission Mount

&#169© Copyright Chevrolet. All rights reserved

Transmission Rear Mount Replacement

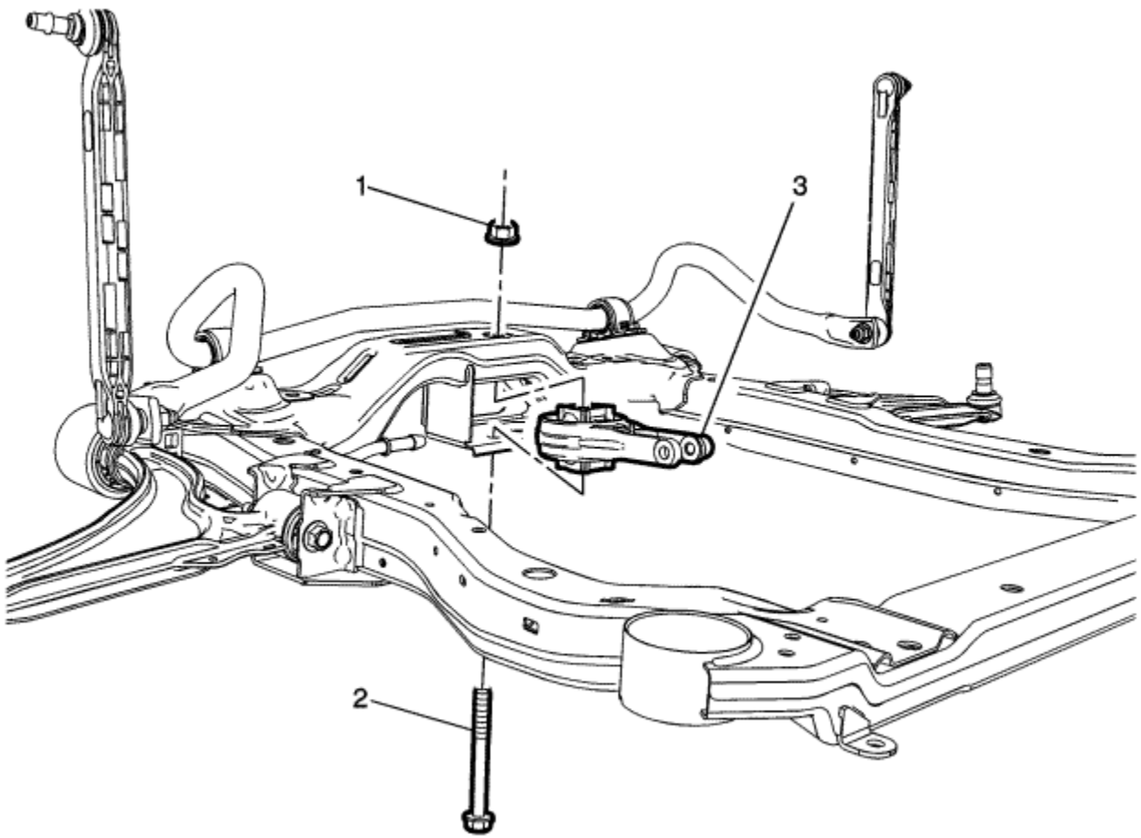

Callout	Component Name
Preliminary Procedure Remove the steering gear from the vehicle. Refer to Steering Gear Replacement .	
	Nut (Qty: 1)

1	**Caution:** Refer to Component Fastener Tightening Caution in the Preface section. **Tip** Tighten the nut, not the bolt. **Tighten** 100 N·m (74 lb ft)
2	Bolt (Qty: 1)
3	Rear Transmission Mount

© Copyright Chevrolet. All rights reserved

Transmission Replacement

Removal Procedure

Danger: Do not use a service jack in locations other than those specified to lift this vehicle. Lifting the vehicle with a jack in those other locations could cause the vehicle to slip off the jack and roll; this could cause injury or death.

1. Place the vehicle on a hoist. Refer to Lifting and Jacking the Vehicle .

   Danger: Always perform the High Voltage Disabling procedure prior to servicing any High Voltage component or connection. Personal Protection Equipment (PPE) and proper procedures must be followed.

   The High Voltage Disabling procedure will perform the following tasks:

   - Identify how to disable high voltage.
   - Identify how to test for the presence of high voltage.
   - Identify condition under which high voltage is always present and personal protection equipment (PPE) and proper procedures must be followed.

   Failure to follow the procedures exactly as written may result in serious injury or death.

2. Disable the high voltage system. Refer to High Voltage Disabling .
3. Remove the air cleaner resonator outlet duct. Refer to Air Cleaner Resonator Outlet Duct Replacement .
4. Remove the drive motor generator power inverter module. Refer to Drive Motor Generator Power Inverter Module Replacement .
5. Remove the front bumper fascia. Refer to Front Bumper Fascia Removal and Installation : Volt → Ampera .
6. Using mechanic's wire, secure the radiator assembly to the radiator core support.

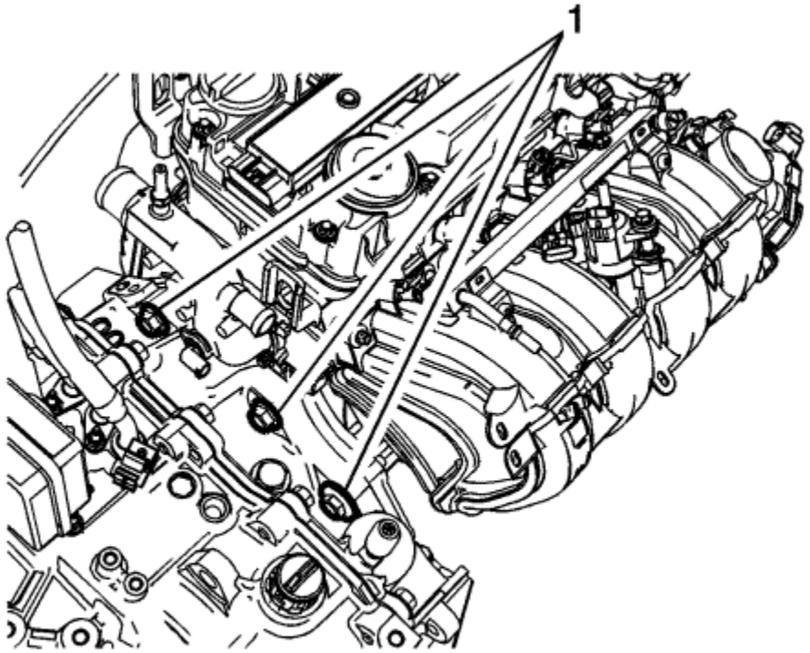

7. Remove the three upper bell housing fasteners (1).

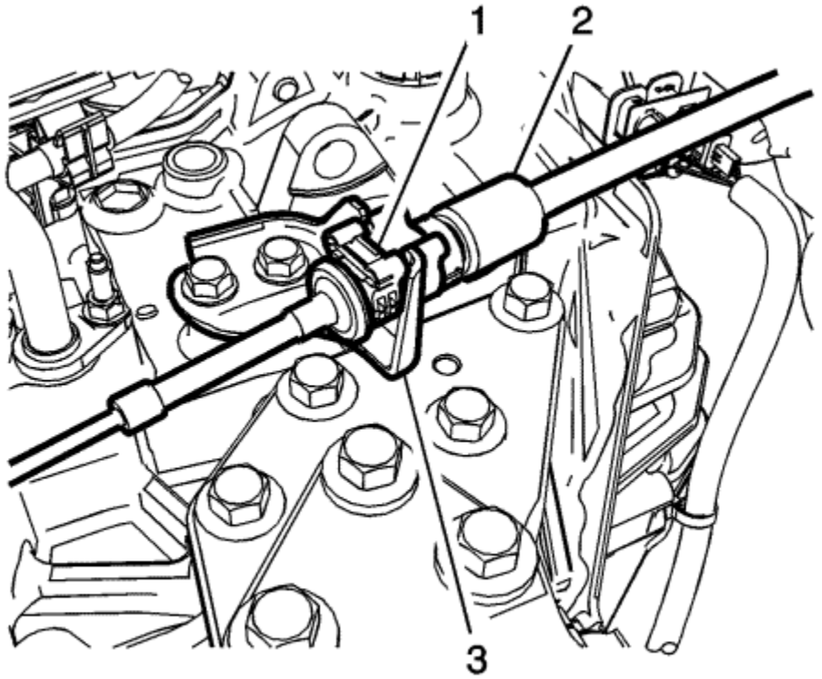

8. Press the locking tab (1) rearward in order to release the transmission range selector lever cable (2) from the cable bracket.

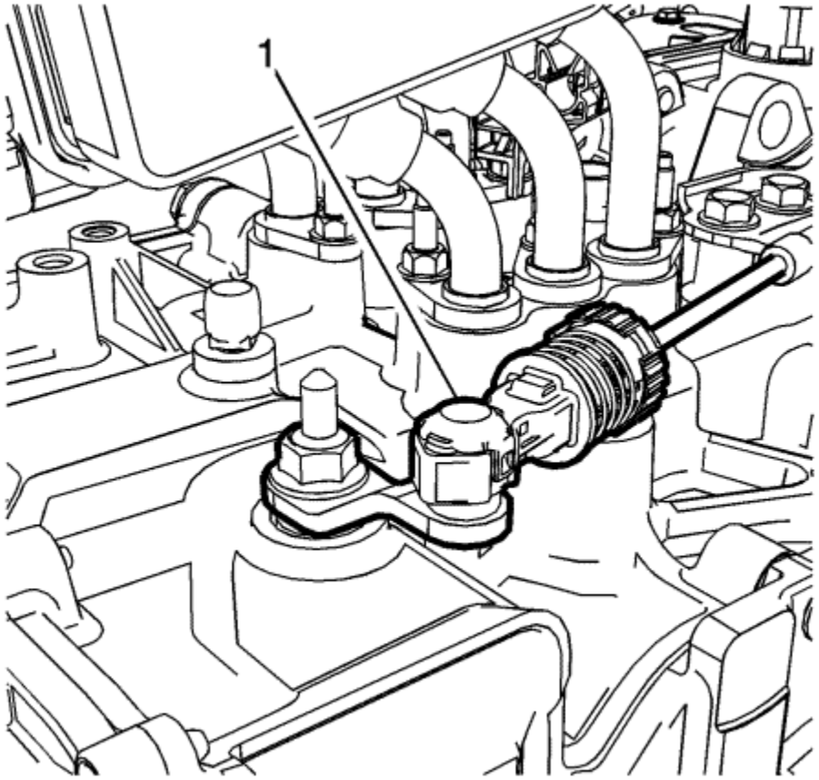

9. Disconnect the transmission range selector lever cable terminal (1) from the transmission manual pin, then position the cable out of the way.

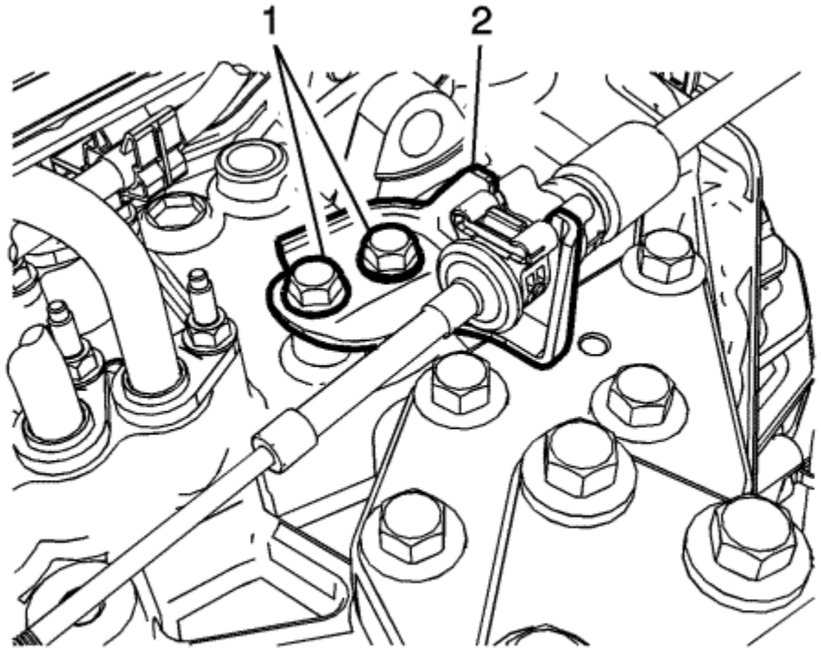

10. Remove the shift control cable bracket fasteners (1), then the bracket (2) from the transmission.

Warning: Hold the transmission range selector lever while removing or installing the lever retaining nut. Failure to hold the lever can cause damage to the transmission internal park system components which could allow the vehicle to roll when placed in the park position.

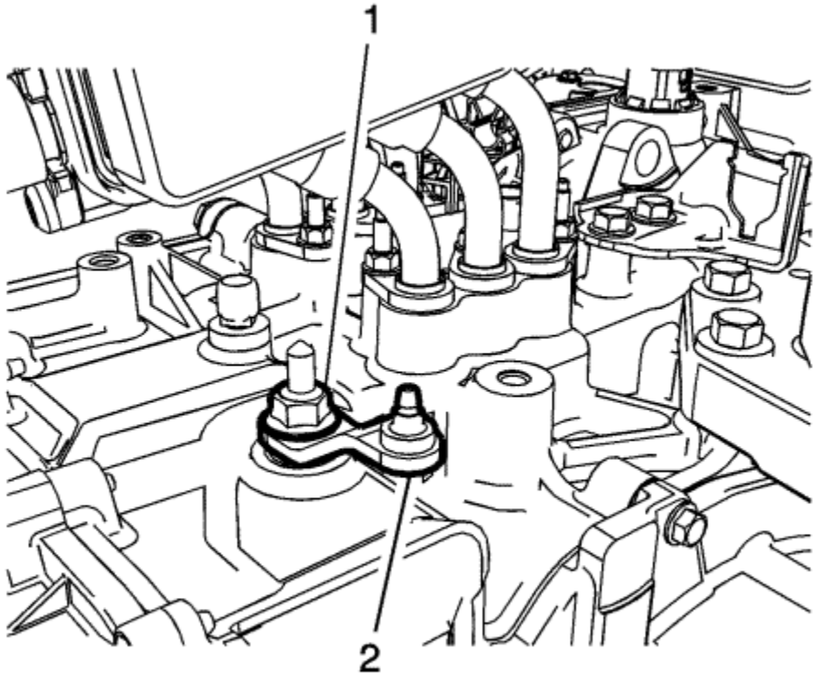

11. Remove the transmission range selector lever nut (1).
12. Remove the transmission range selector lever (2).

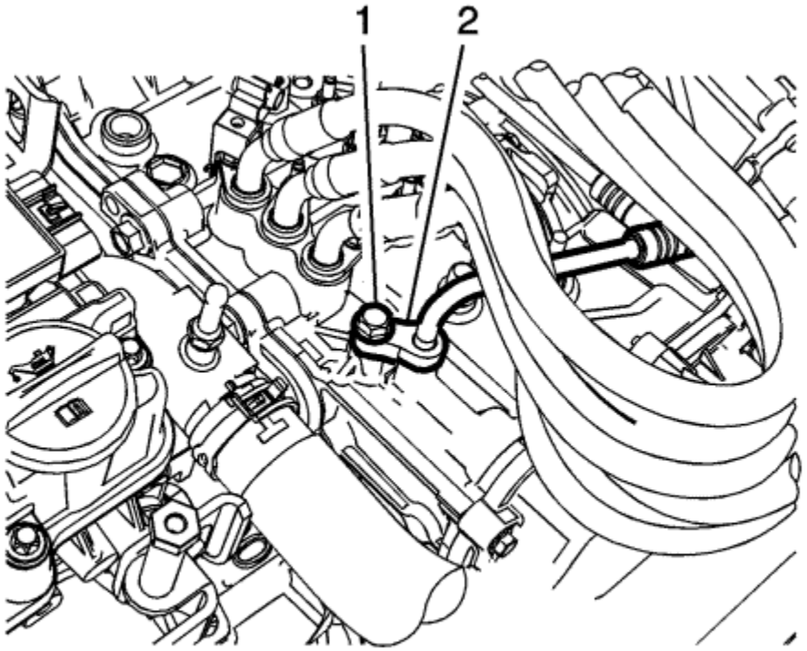

13. Remove the transmission fluid cooler inlet pipe fastener (1), then disconnect the inlet pipe (2) from the transmission.
14. Inside the passenger compartment, disconnect the intermediate steering shaft from the steering gear. Refer to Intermediate Steering Shaft Replacement .

    Danger: Do not use a service jack in locations other than those specified to lift this vehicle. Lifting the vehicle with a jack in those other locations could cause the vehicle to slip off the jack and roll; this could cause injury or death.

15. Raise and support the vehicle. Refer to Lifting and Jacking the Vehicle .

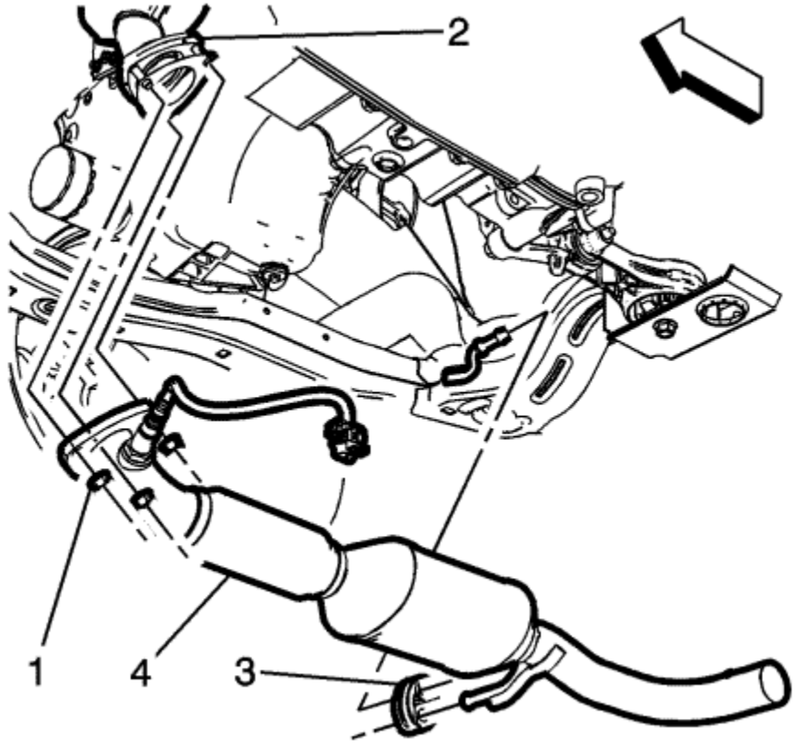

16. Remove the catalytic converter assembly (4) from the vehicle. Refer to Catalytic Converter Replacement .
17. Drain the transmission fluid. Refer to Transmission Fluid Replacement .

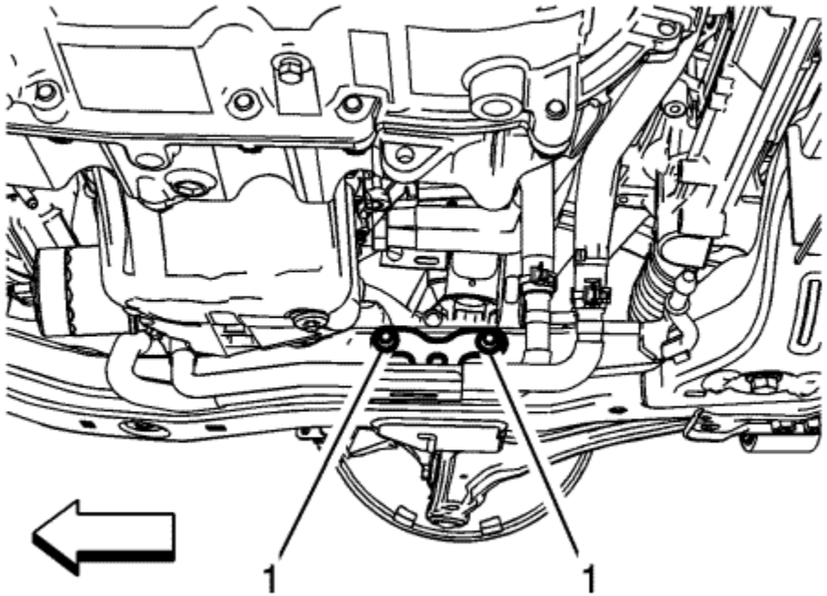

18. Remove the heater inlet and outlet pipe to frame fasteners (1).
19. Remove the front wheelhouse liners. Refer to Front Wheelhouse Front Liner Replacement .

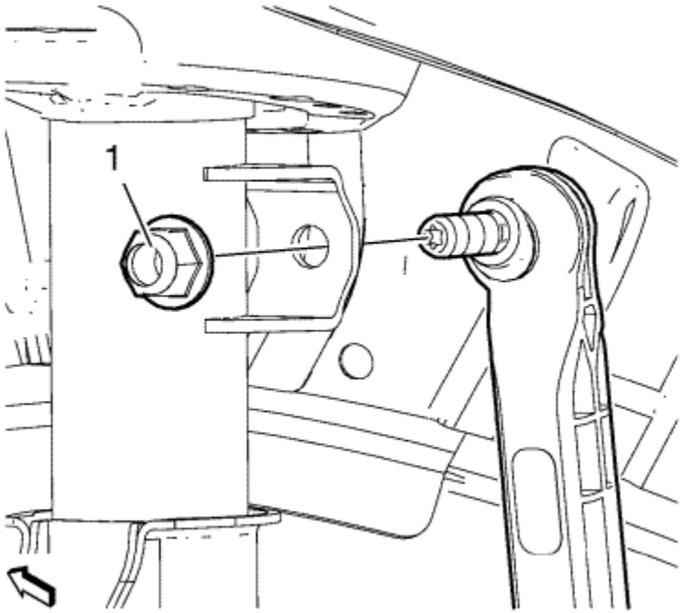

20. Remove the stabiliser link nuts (1) from the two front stabiliser links.
21. Disconnect the stabiliser links from the strut assemblies.
22. Disconnect the outer tie rod ends from the steering knuckles. Refer to Steering Linkage Outer Track rod Replacement .

    Note: Do Not disconnect the brake hoses from the callipers.

23. Remove the front brake callipers from the calliper brackets, then suspend the callipers with mechanic's wire to the body.
24. Disconnect the front steering knuckles from the strut assemblies. Refer to Steering Knuckle Replacement .

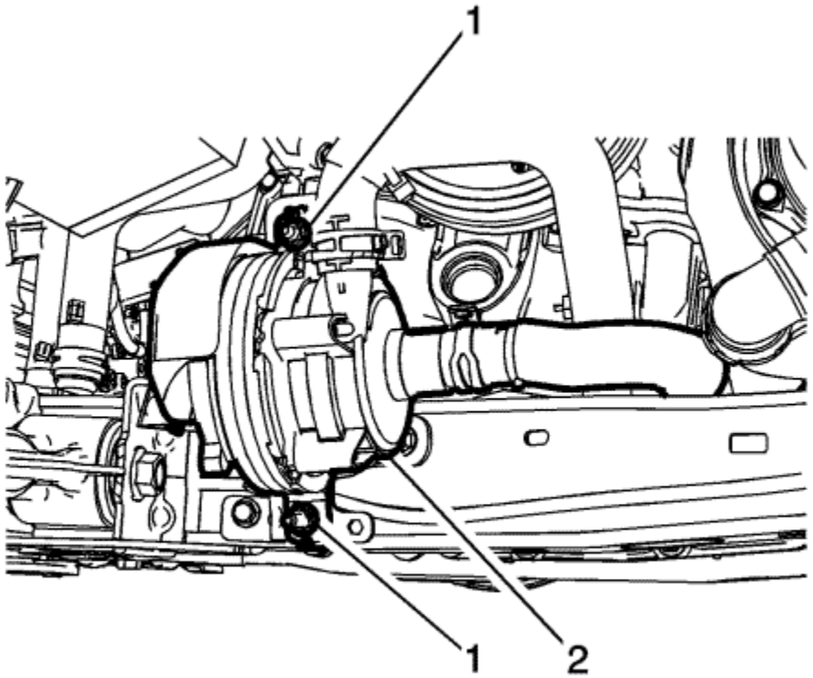

25. Remove the heater water auxiliary pump fasteners (1), then position the pump out of the way.

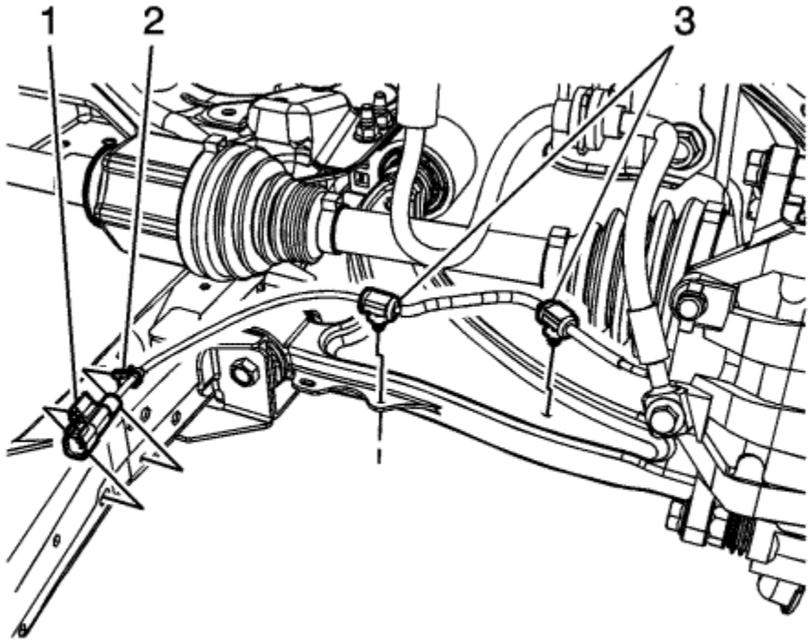

26. Disconnect the front left and right wheel speed sensor connectors (1).
27. Disconnect the left wheel drive shaft from the transmission, then suspend the wheel drive shaft with mechanic's wire.
28. Disconnect the right wheel drive shaft from the front wheel drive intermediate shaft, then suspend the wheel drive shaft with mechanic's wire.
29. Disconnect the rear transmission mount from the rear transmission bracket.
30. Remove the rear transmission mount bracket from the transmission. Refer to Transmission Mount Bracket Replacement - Rear .
31. Remove the front wheel drive intermediate shaft. Refer to Front Wheel Drive Intermediate Shaft Replacement .
32. Lower the vehicle.
33. Install the engine support fixture. Refer to Engine Support Fixture .
34. Remove the transmission mount side bracket. Refer to Transmission Mount Transmission-Side Bracket Replacement .
35. Disconnect the transmission fluid cooler outlet pipe from the transmission. Refer to Transmission Fluid Cooler Outlet Pipe Replacement .
36. Using suitable chains or straps, secure the front of the vehicle to the hoist arms.
37. Disconnect the wiring harnesses from the drivetrain and front suspension frame as necessary.
38. Remove the drive motor battery coolant cooler inlet and outlet hose clip retainer bolt. Refer to Drive Motor Battery Coolant Inlet Hose Replacement .
39. Using a suitable engine support table or equivalent, lower the vehicle until the drivetrain and front suspension frame contacts the engine support table.

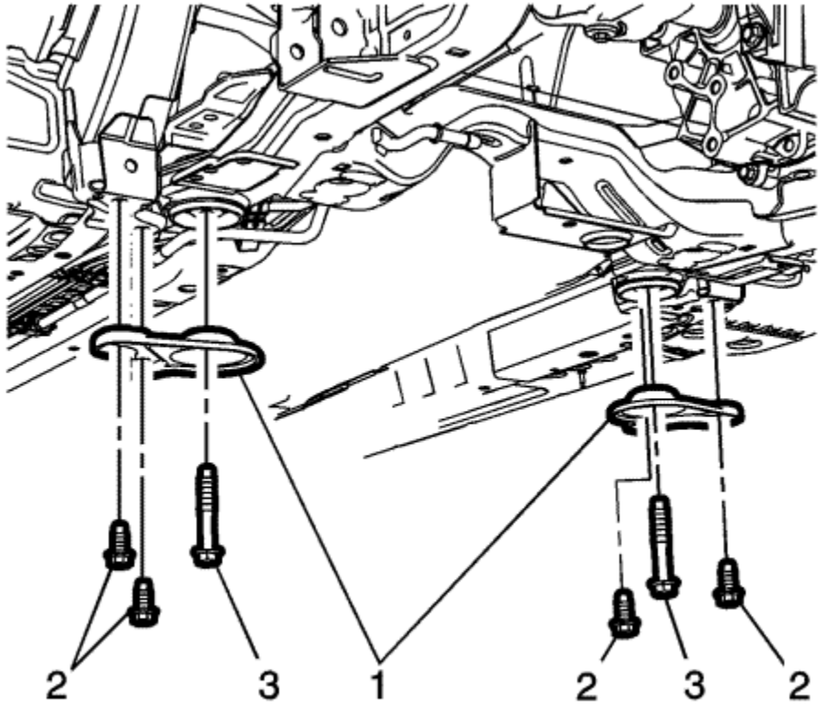

40. Remove the drivetrain and front suspension frame reinforcements (1) from the rear of the frame.
41. Remove the front drivetrain and front suspension retaining bolts.

Note: Slightly raise the vehicle, Do Not raise the vehicle too far or damage to Electrical Power Steering (EPS) wiring harness could occur.

42. Slightly raise the vehicle off of the frame to gain access to the EPS connectors.
43. Disconnect the EPS electrical connectors from the power steering gear assembly. Refer to FEP Connectors : Steering Gear .
44. Raise the vehicle off the drivetrain and front suspension frame.
45. Position a suitable transmission jack under the transmission.

Warning: Handle with care, the transmission assembly weighs over 90.7 kg (200 lbs). Bodily injury could occur if not handled properly.

46. Using a suitable straps or chains, secure the transmission to the transmission jack.
47. Disconnect the transmission electrical connectors from the transmission, then position the wiring harnesses out of the way.
48. Disconnect the ground strap from the rear of the transmission.
49. Remove the starter opening cover located below the intake manifold.
50. Remove the four torque damper to flywheel bolts.

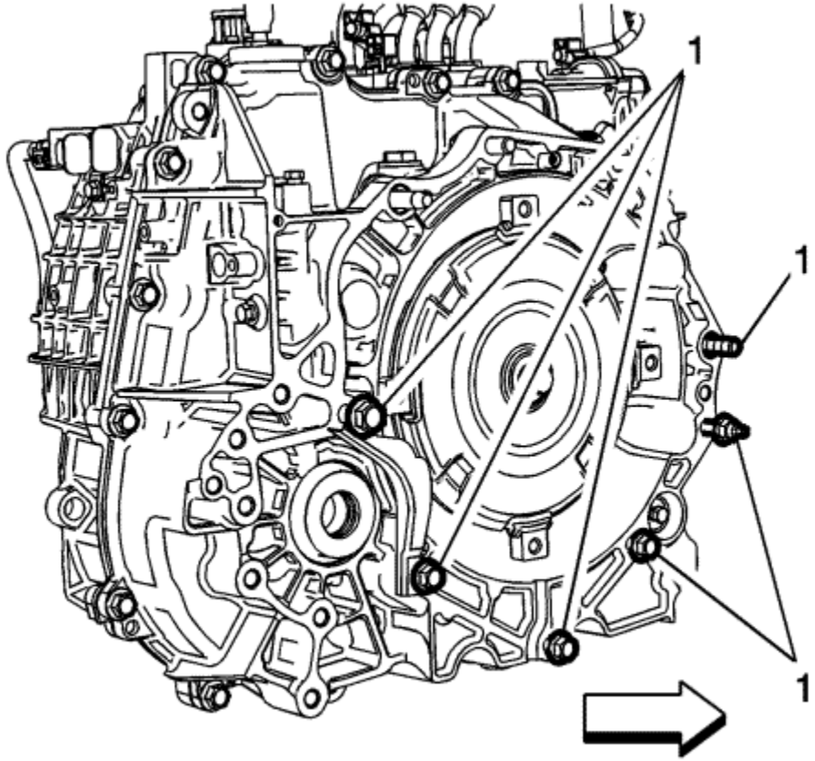

51. Remove the six lower transmission to engine fasteners (1).
52. Remove the transmission to engine stud.
53. Lower the transmission assembly from the vehicle.

Installation Procedure

1. Position the transmission assembly in the vehicle.

   Caution: Refer to Fastener Caution in the Preface section.

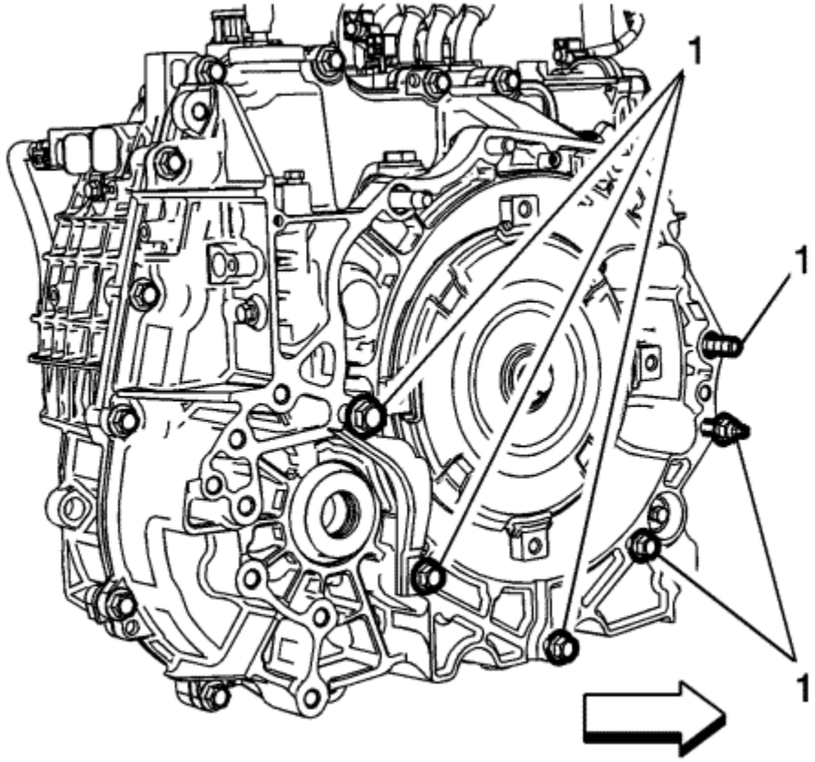

2. Install the six lower transmission to engine fasteners (1), then tighten to **80 N·m (59 lb ft)**.
3. Install the transmission to engine stud.
4. Install the four torque damper to flywheel bolts, then tighten to **62 N·m (46 lb ft)**.
5. Install the starter opening cover, then tighten to **20 N·m (15 lb ft)**.
6. Connect the ground strap to the rear of the transmission.
7. Connect the transmission electrical connectors to the transmission.
8. Connect the transmission cooler outlet pipe to the transmission. Refer to Transmission Fluid Cooler Outlet Pipe Replacement .
9. Remove the transmission jack from under the transmission.
10. Position the drivetrain and front suspension frame in the vehicle.

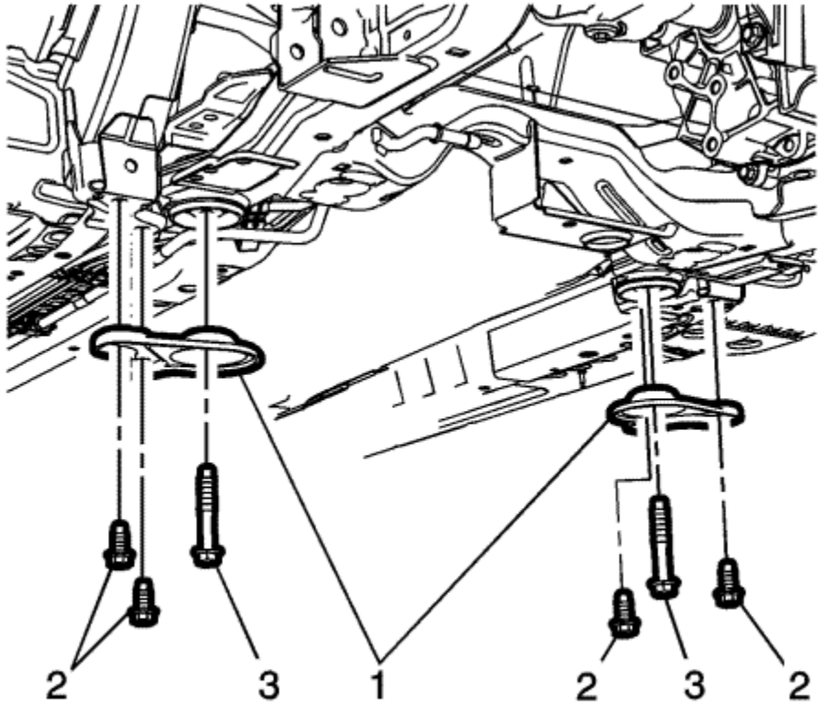

11. Install the four front drivetrain and front suspension frame retaining bolts, then tighten to the fasteners to **160 N·m (118 lb ft)**.
12. Install the drivetrain and front suspension frame reinforcements (1) to the rear of the frame, then tighten the reinforcement fasteners (2) to **22 N·m (16 lb ft)**.
13. Connect the EPS electrical connectors to the power steering gear assembly.
14. Connect the transmission fluid cooler outlet pipe to the transmission. Refer to Transmission Fluid Cooler Outlet Pipe Replacement .
15. Connect the wiring harnesses from the drivetrain and front suspension frame as necessary.
16. Install the drive motor battery coolant cooler inlet and outlet hose clip retainer bolt. Refer to Drive Motor Battery Coolant Inlet Hose Replacement .
17. Install the front wheel drive intermediate shaft. Refer to Front Wheel Drive Intermediate Shaft Replacement .

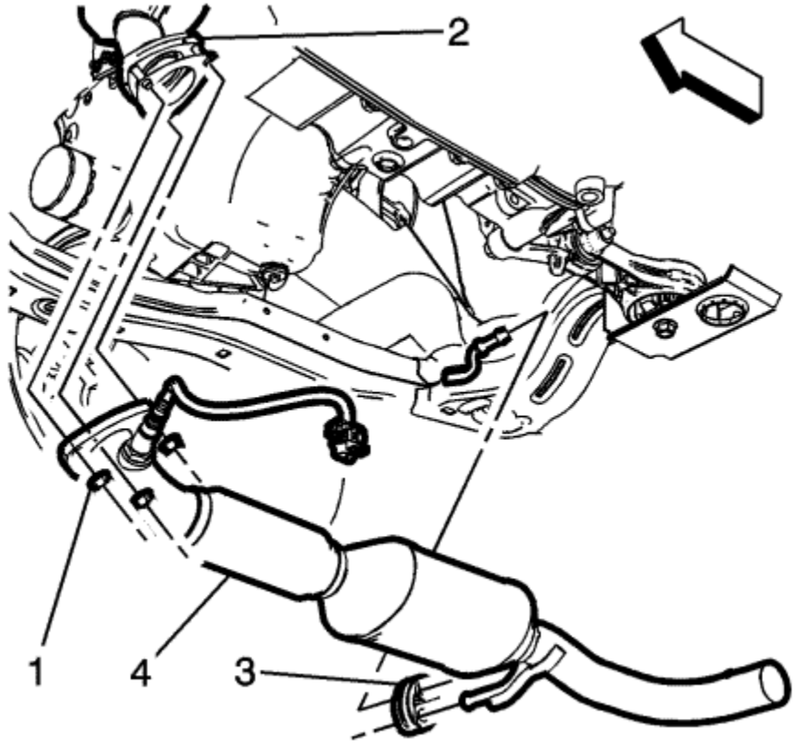

18. Install the catalytic converter assembly (4). Refer to Catalytic Converter Replacement .
19. Connect the front steering knuckles to the strut assemblies. Refer to Steering Knuckle Replacement .

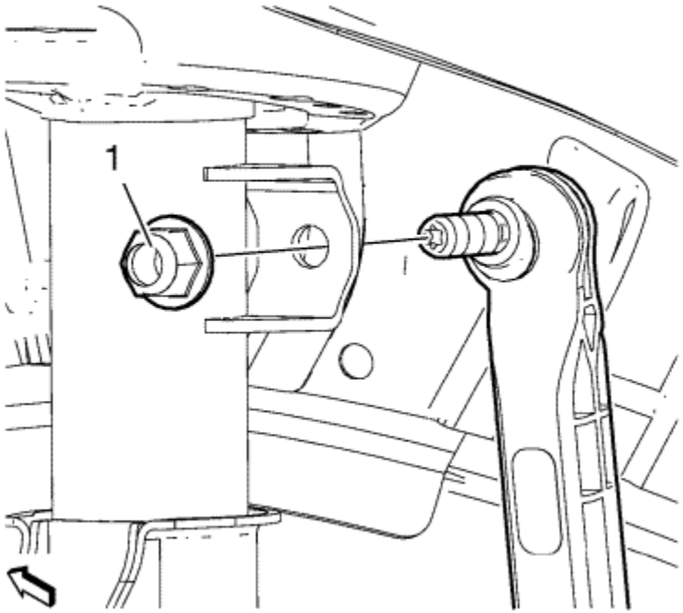

20. Connect the stabiliser link (1) to the strut assemblies. Refer to Stabiliser Shaft Link Replacement .
21. Install the front brake callipers to the calliper brackets. Refer to Step 2 of the installation procedure. Front Brake Calliper Replacement .
22. Connect the outer tie rod ends to the steering knuckles. Refer to Steering Linkage Outer Track rod Replacement .

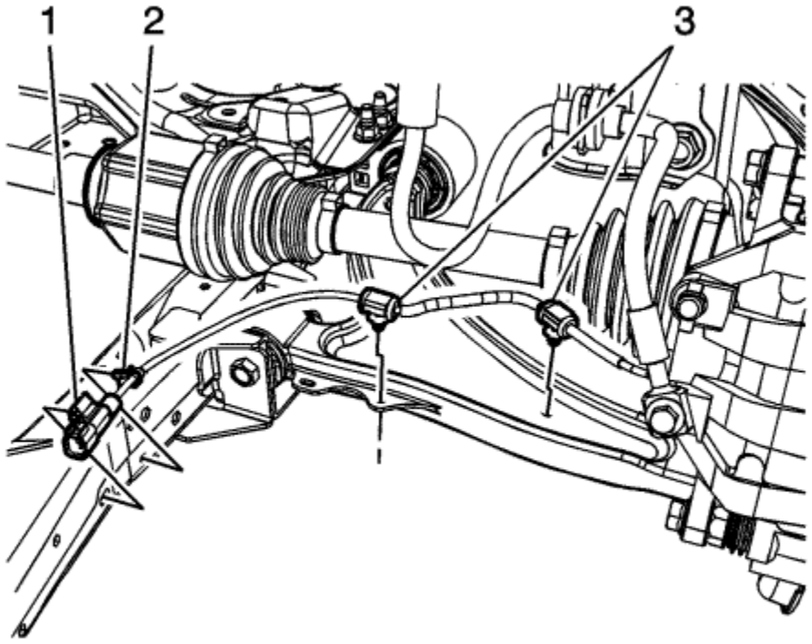

23. Connect the front left and right wheel speed sensor connectors (1).

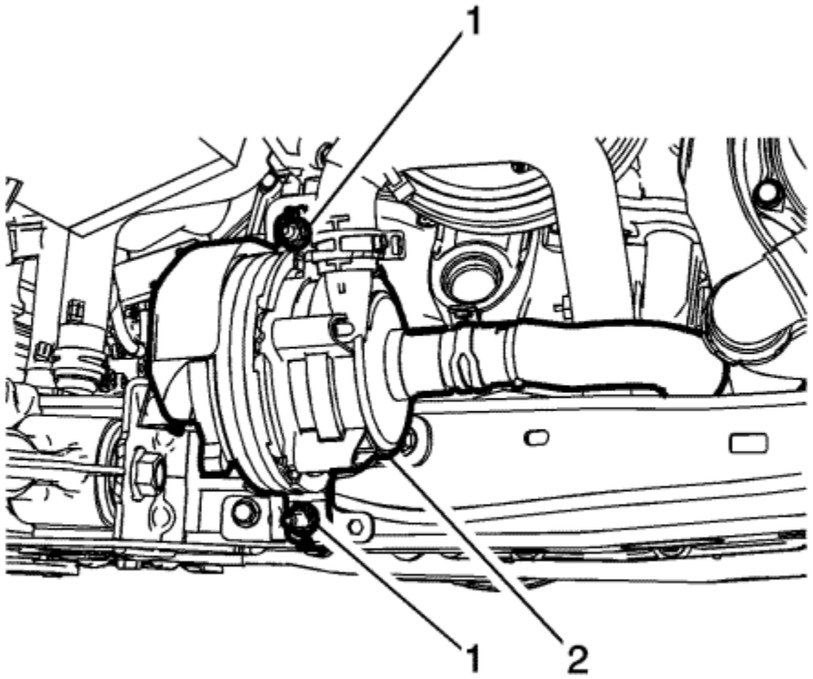

24. Install the heater water auxiliary pump fasteners (1), then tighten to the fasteners to **9 N·m (80 lb in)**.

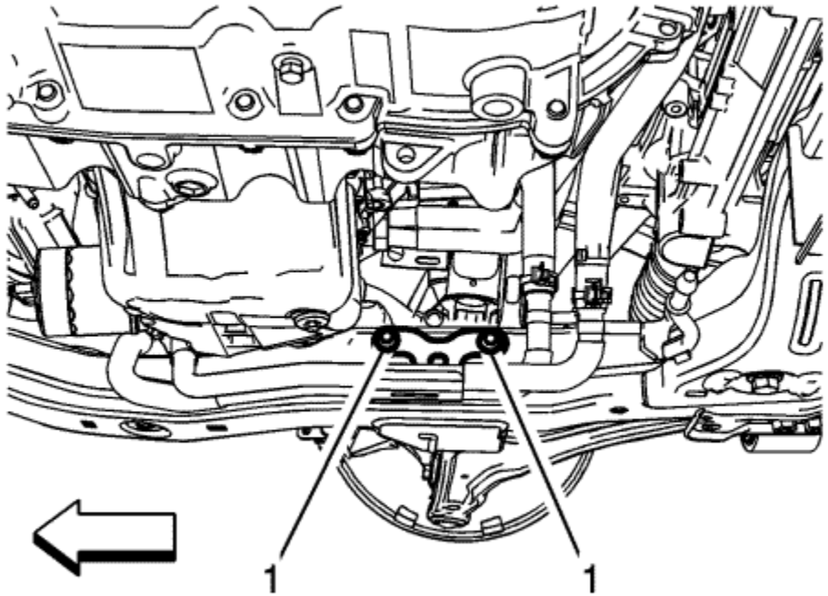

25. Install the heater inlet and outlet pipe to frame fasteners (1), then tighten to the fasteners to **17 N·m (13 lb ft)**.
26. Install the rear transmission mount bracket to the transmission. Refer to Transmission Mount Bracket Replacement - Rear .
27. Connect the rear transmission mount to the rear transmission bracket.
28. Connect the right wheel drive shaft to the transmission. Refer to Transmission Rear Mount Replacement .
29. Connect the left wheel drive shaft to the front wheel drive intermediate shaft.
30. Install the front wheelhouse liners. Refer to Front Wheelhouse Front Liner Replacement .
31. Lower the vehicle.
32. Remove the chains or straps, securing the front of the vehicle to the hoist arms.
33. Remove the engine support fixture.
34. Install the transmission mount side bracket. Refer to Transmission Mount Transmission-Side Bracket Replacement .
35. Remove the engine support fixture.

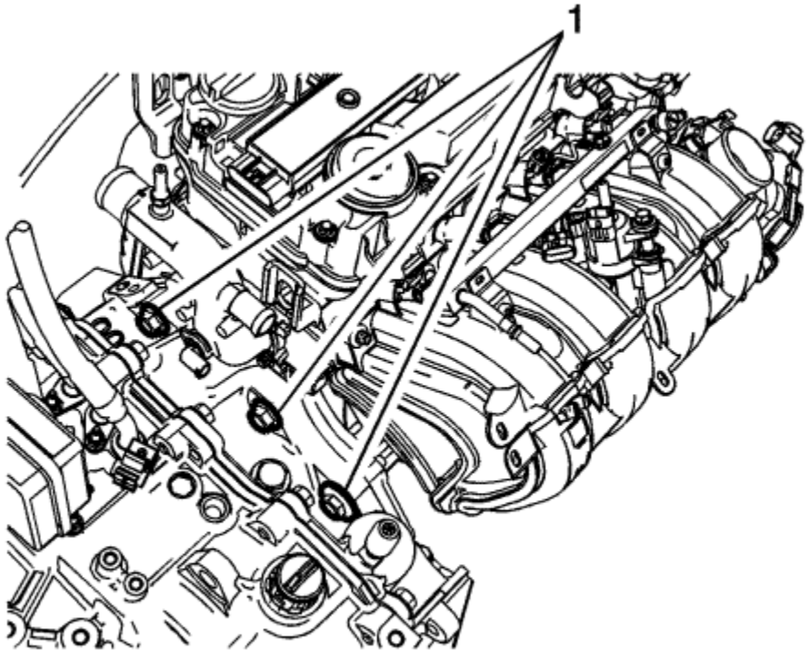

36. Install the three upper bell housing fasteners (1), then tighten to **80 N·m (59 lb ft)**.

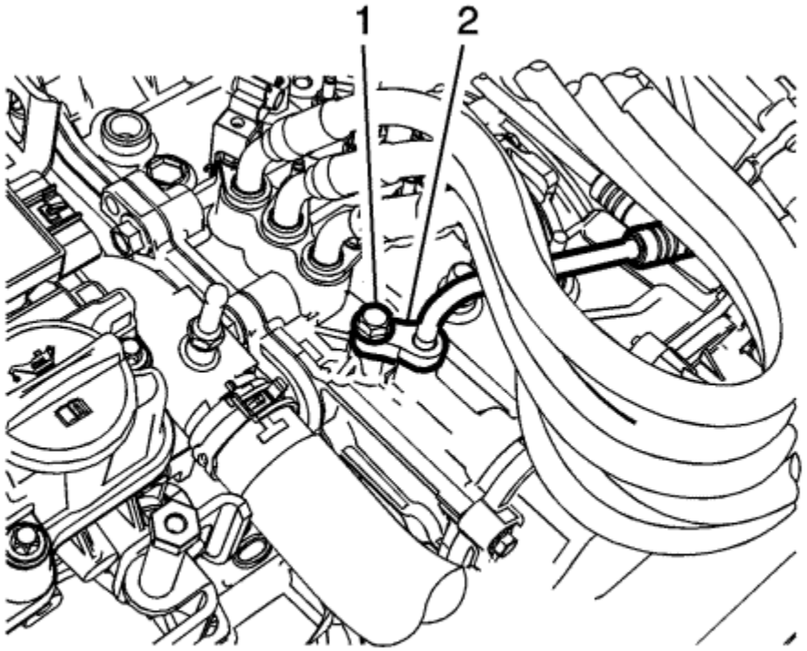

37. Install the transmission fluid cooler inlet pipe to the transmission then tighten the fastener (1) to **22 N·m (16 lb ft)**.
38. Fill the transmission with transmission fluid. Refer to Transmission Fluid Replacement .

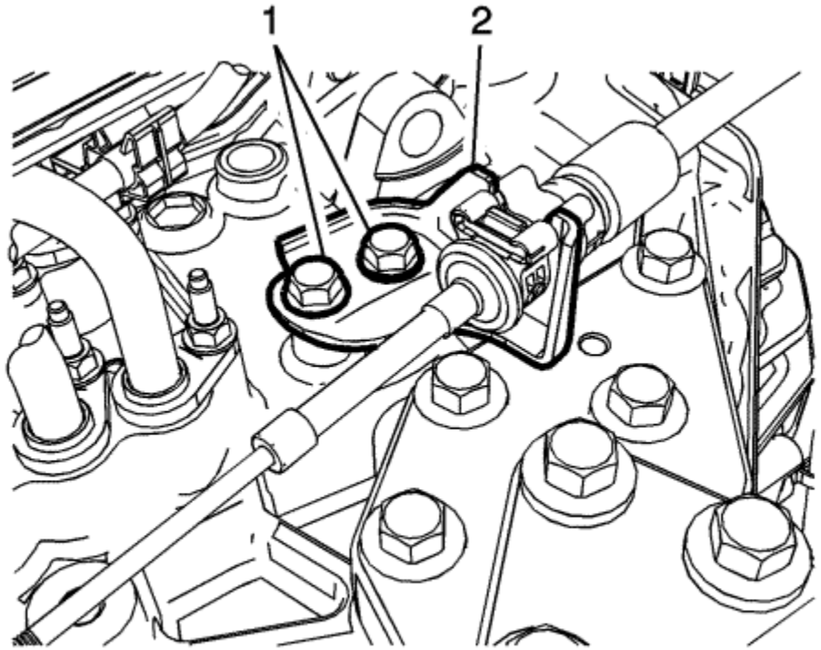

39. Install the shift control cable bracket to the transmission, then tighten the fasteners (1) to **22 N·m (16 lb ft)**.

Warning: Hold the transmission range selector lever while removing or installing the lever retaining nut. Failure to hold the lever can cause damage to the transmission internal park system components which could allow the vehicle to roll when placed in the park position.

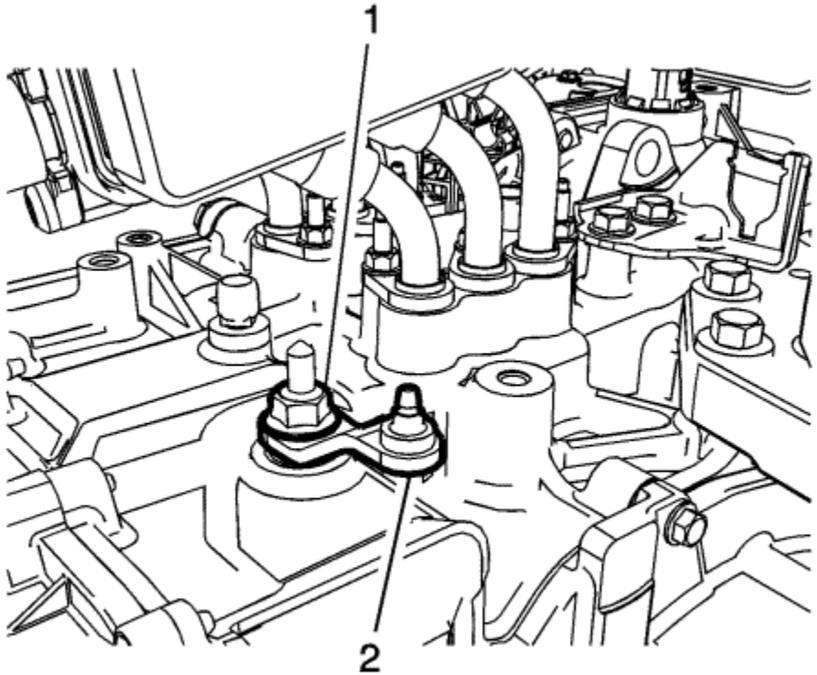

40. Install the transmission range selector lever (2).
41. Install the transmission range selector lever nut (1) and tighten to **22 N·m (16 lb ft)**.

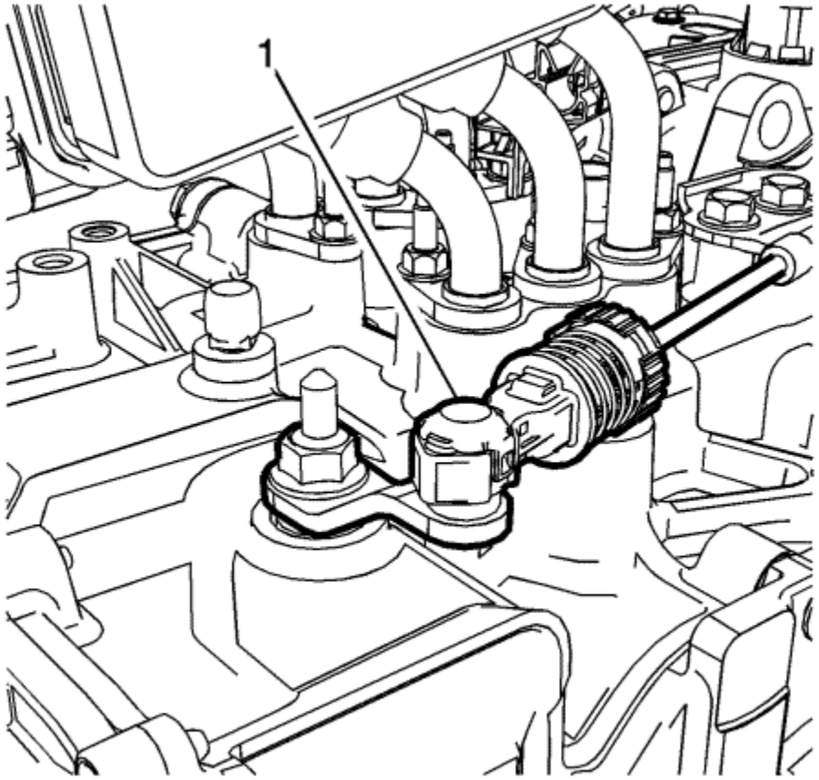

42. Connect the transmission range selector lever cable terminal (1) to the transmission manual pin.

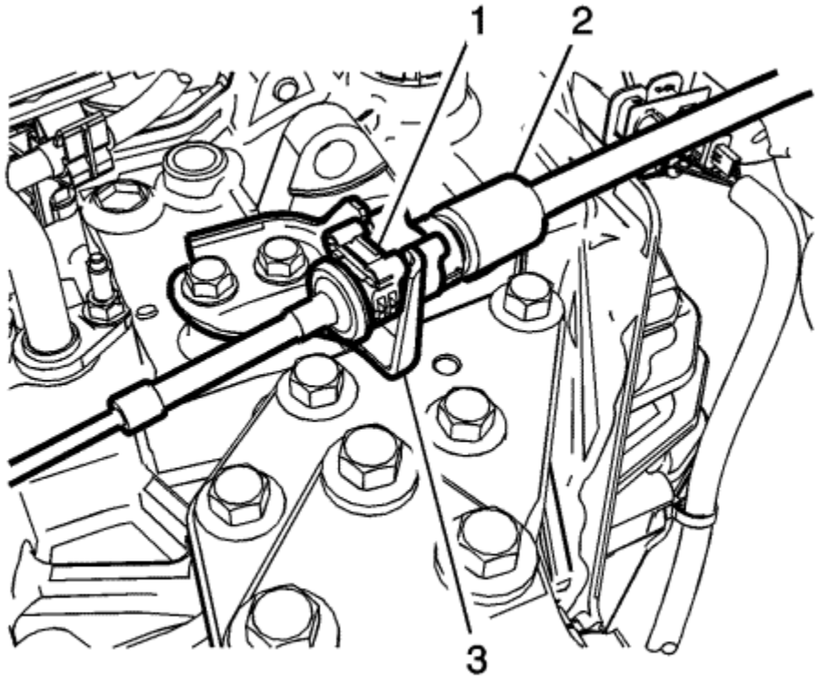

43. Press the locking tab (1) rearward in order to lock the transmission range selector lever cable (2) to the cable bracket.
44. Connect the intermediate steering shaft to the steering gear. Refer to Intermediate Steering Shaft Replacement .
45. Install the front bumper fascia. Refer to Front Bumper Fascia Removal and Installation : Volt → Ampera .
46. Install the front wheelhouse liners. Refer to Front Wheelhouse Front Liner Replacement .
47. Install the front tyre and wheels on the vehicle. Refer to Tyre and Wheel Removal and Installation .
48. Remove the mechanic's wire securing the radiator assembly to the radiator core support.
49. Install the air cleaner resonator outlet duct. Refer to Air Cleaner Resonator Outlet Duct Replacement .
50. Install the drive motor generator power inverter module. Refer to Drive Motor Generator Power Inverter Module Replacement .
51. Enable the high voltage system. Refer to High Voltage Enabling .
52. Connect the negative battery cable to the battery. Refer to Battery Negative Cable Disconnection and Connection .
53. Program the control solenoid valve and transmission control module assembly. Refer to Control Solenoid Valve and Transmission Control Module Assembly Programming and Setup : 4ET50 .

&#169© Copyright Chevrolet. All rights reserved

Holding Fixture Installation

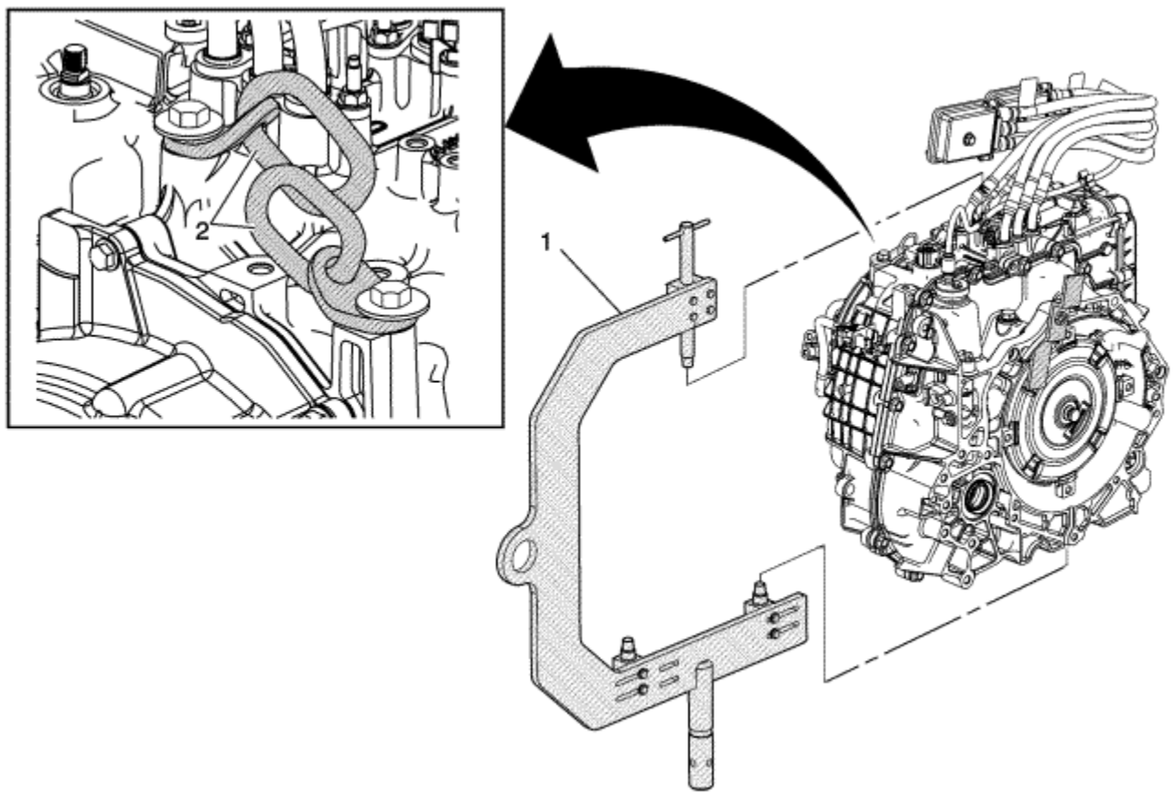

Callout	Component Name
	DT-46625 Transmission Holding Fixture **Warning:** Handle with care, the transmission assembly weighs over 183 Kg (403 lbs). Bodily injury could occur if not handled properly. **Caution:** Refer to Fastener Caution in the Preface section. **Tip**

1	Adjust mounting block on fixture to match bosses on case, then tighten bolts to: **Tighten** 13 N·m (115 lb in) **Special Tools** *DT-46625* Transmission Holding Fixture For equivalent regional tools, refer to Special Tools .
2	DT-42451-1 Engine Support Adaptor (Qty: 2) **Special Tools** *DT-42451-1* Engine Support Adaptor For equivalent regional tools, refer to Special Tools .

© Copyright Chevrolet. All rights reserved

Torque Damper Removal

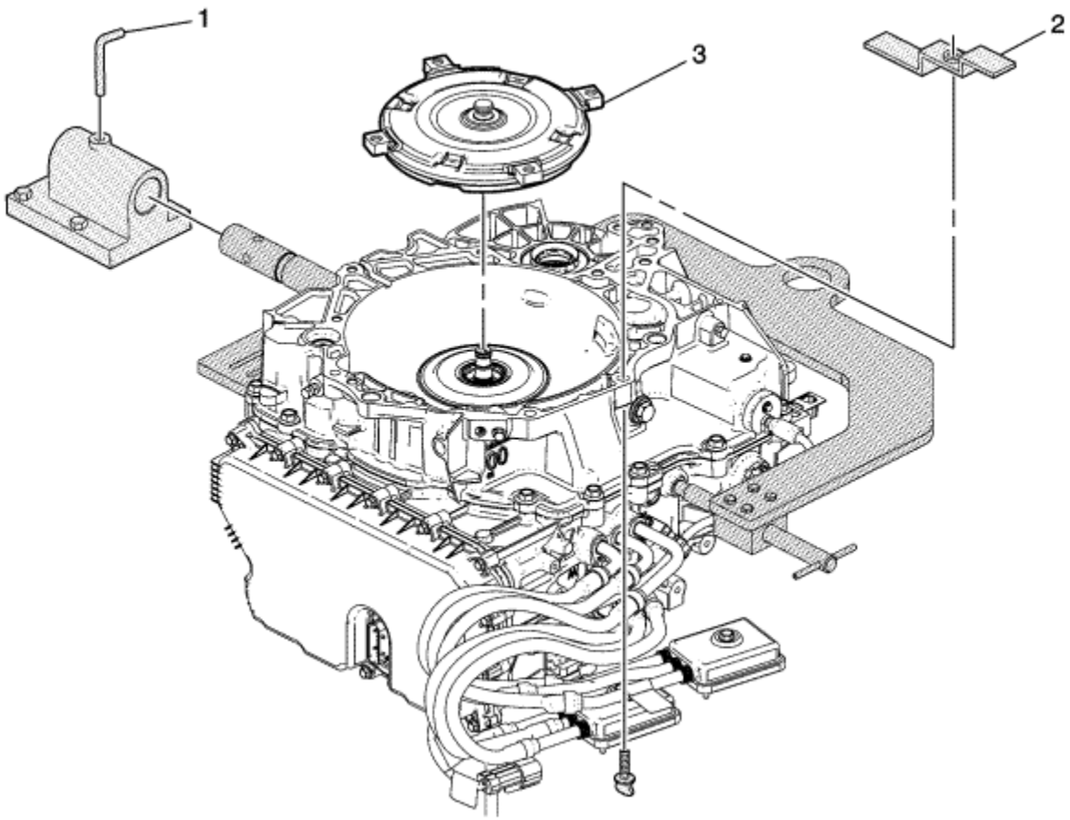

Callout	Component Name
	Lock Pin **Warning:** Lock pin must be secured into the bench fixture to hold the transmission and prevent bodily injury. **Warning:** Handle with care, the transmission assembly weighs over 183 Kg (403 lbs). Bodily injury could occur if not handled properly. **Tip**

1	Ensure the *DT 3289-20* holding fixture is mounted to a bench that is properly supported and will support the weight of the transmission assembly without tipping. *DT 39890* adaptor and an engine stand can be used as an alternative method for supporting the transmission during repairs. **Special Tools** • *DT 3289-20* Holding Fixture Base Assembly • *DT 39890* Transmission Holding Fixture Adaptor For equivalent regional tools, refer to Special Tools .
2	Converter Holding Strap **Special Tool** *DT 21366* Converter Holding Strap For equivalent regional tools, refer to Special Tools .
3	Automatic Transmission Torque Damper Assembly **Caution:** Failure to raise the torque damper assembly straight up could damage the torque damper clutch lip seal inside the torque damper clutch assembly.

&#169© Copyright Chevrolet. All rights reserved

Control Valve Body Cover Removal

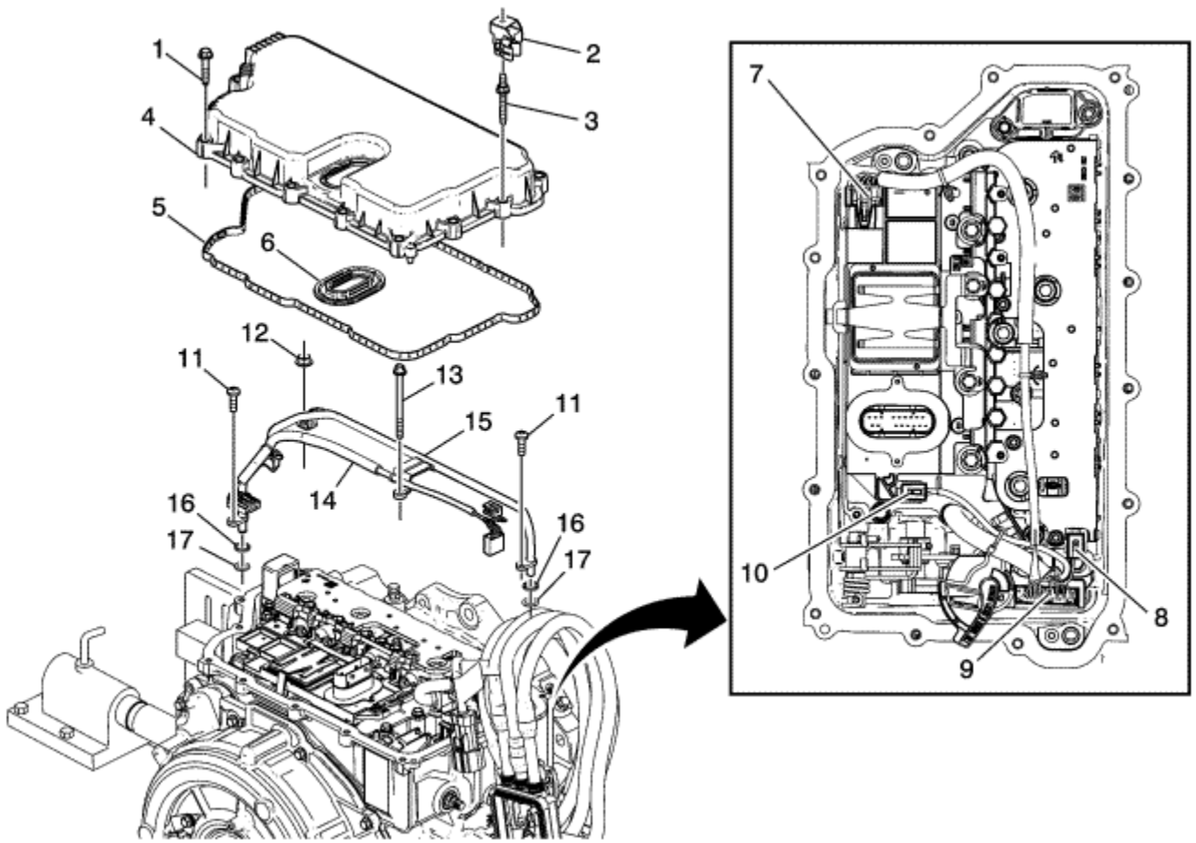

Callout	Component Name
1	Control Valve Body Cover Bolt M6 x 35 mm (Qty: 10)
2	Auxiliary Pump Motor Cable Retainer
3	Fluid Level Control Valve Stud M6 x 40 (Qty: 5)
4	Control Valve Body Cover Assembly
5	Control Valve Body Cover Gasket

6	Control Valve Body Cover Wiring Connector Hole Seal **Tip** Seal may stay with the cover.
7	Electrical Connector
8	Electrical Connector
9	A/Trans Manual Shift Shaft Position Switch Connector
10	Control Solenoid (w/Body and TCM) TEHCM Valve Assembly Connector
11	Fluid Cooler Outlet Pipe Assembly Bolt M5 x 16 mm (Qty: 2)
12	Variable Drive Pulley Retaining Nut
13	Control Valve Body Bolt M6 x 80 mm (Qty: 1)
14	A/Trans Wiring Extension Harness Assembly **Tip** The wiring harness is attached to the fluid cooler outlet pipe assembly and they will come out together.
15	Transmission Fluid Cooler Outlet Pipe Assembly
16	Nylon O-Ring
17	Transmission Fluid Cooler Outlet Seal **Tip** Discard seal, it is not reusable.

© Copyright Chevrolet. All rights reserved

Control Solenoid Valve and Transmission Control Module Assembly Removal

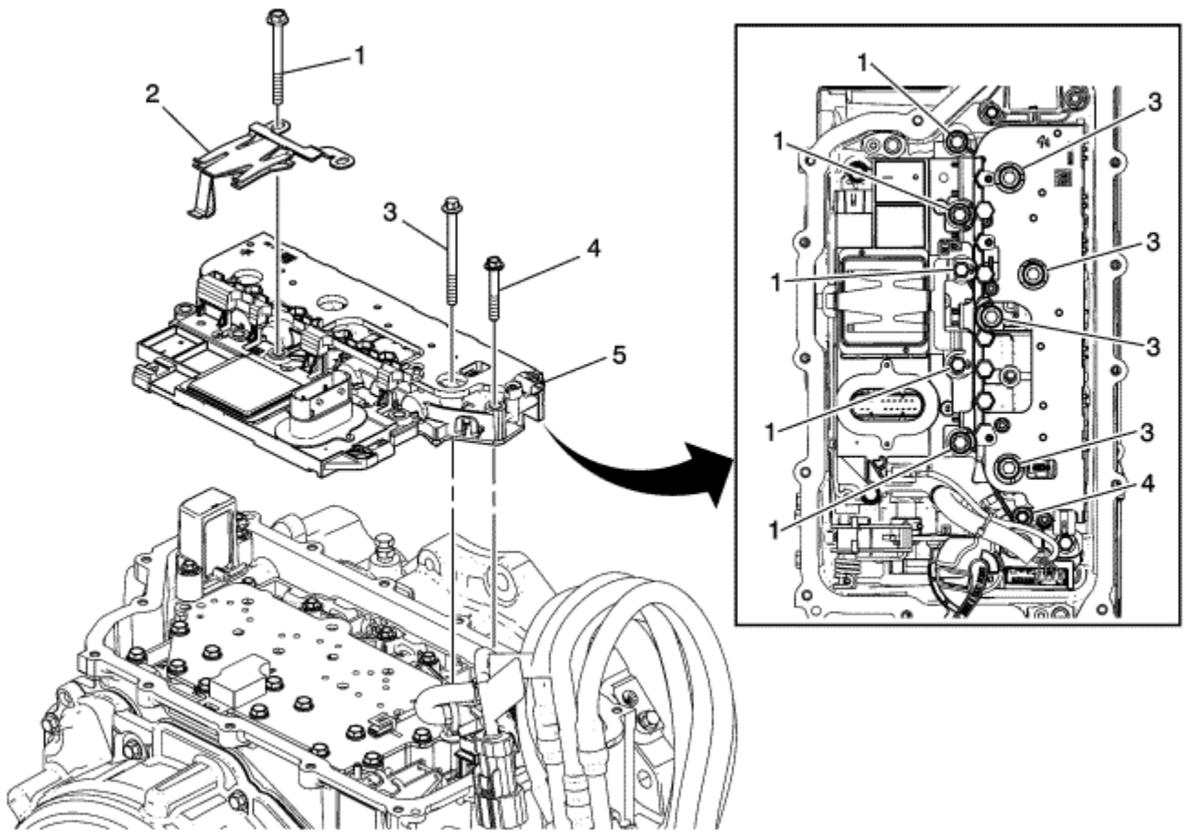

Callout	Component Name
1	Control Valve Body Bolt M6 x 65 mm (Qty: 5)
2	Control Solenoid Valve Spring
3	Control Valve Body Bolt M6 x 75 mm (Qty: 4)
4	Control Valve Body Bolt M6 x 42 mm (Qty: 1)
5	Control Solenoid (w/Body and TCM) TEHCM Valve Assembly

© Copyright Chevrolet. All rights reserved

Manual Shift Shaft Position Switch and Fluid Level Control Valve Removal

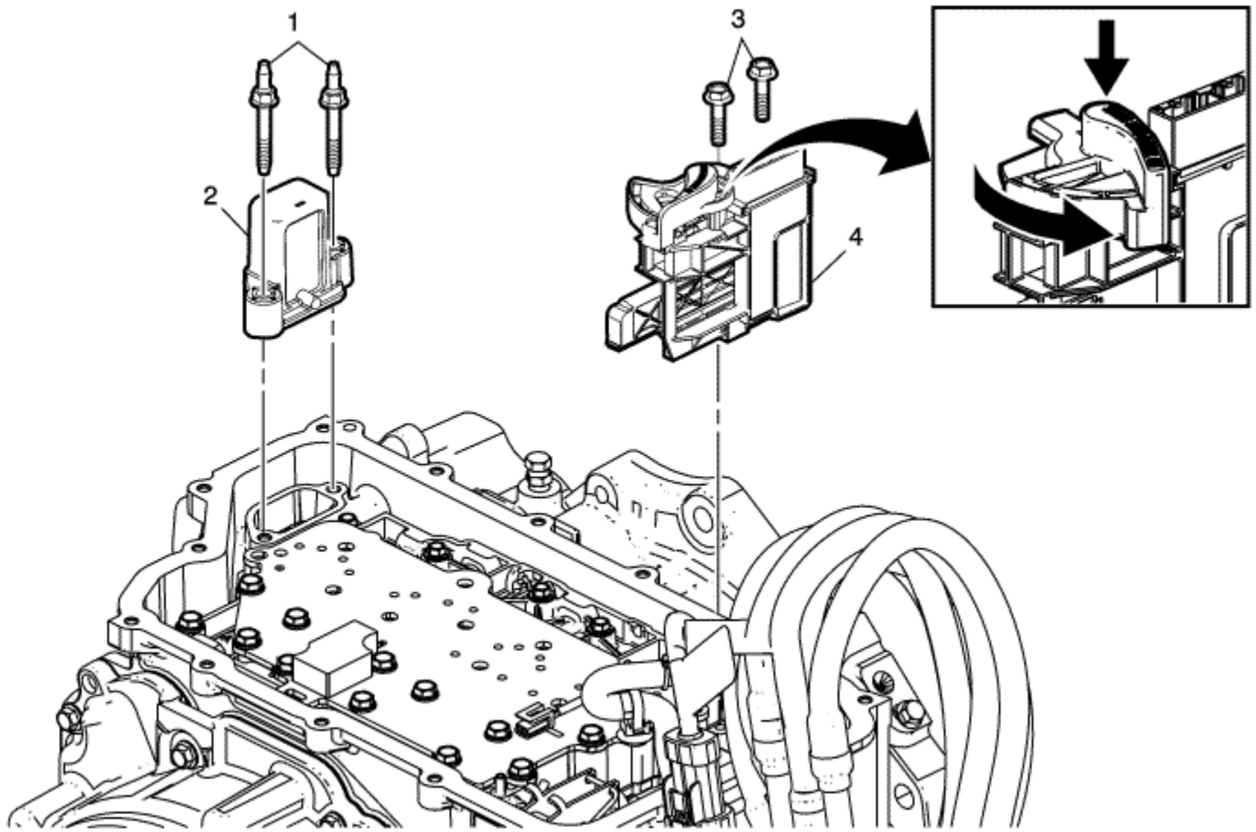

Callout	Component Name
1	A/Trans Fluid Level Control Valve Stud M6 x 40 mm (Qty: 2)
2	A/Trans Fluid Level Control Valve
3	A/Trans Manual Shift Shaft Position Switch Bolt M6 x 25 mm (Qty: 2)
	A/Trans Manual Shift Shaft Position Switch Assembly **Caution:** Both the vehicle and manual shift shaft position switch must be in the neutral position. The manual shift shaft position switch has a mechanical lock and

4	must be locked before removal. Failure to lock the switch in the neutral position may cause vehicle damage. **Procedure** Push down and turn to lock.

© Copyright Chevrolet. All rights reserved

Control Valve Body and Channel Plate Removal

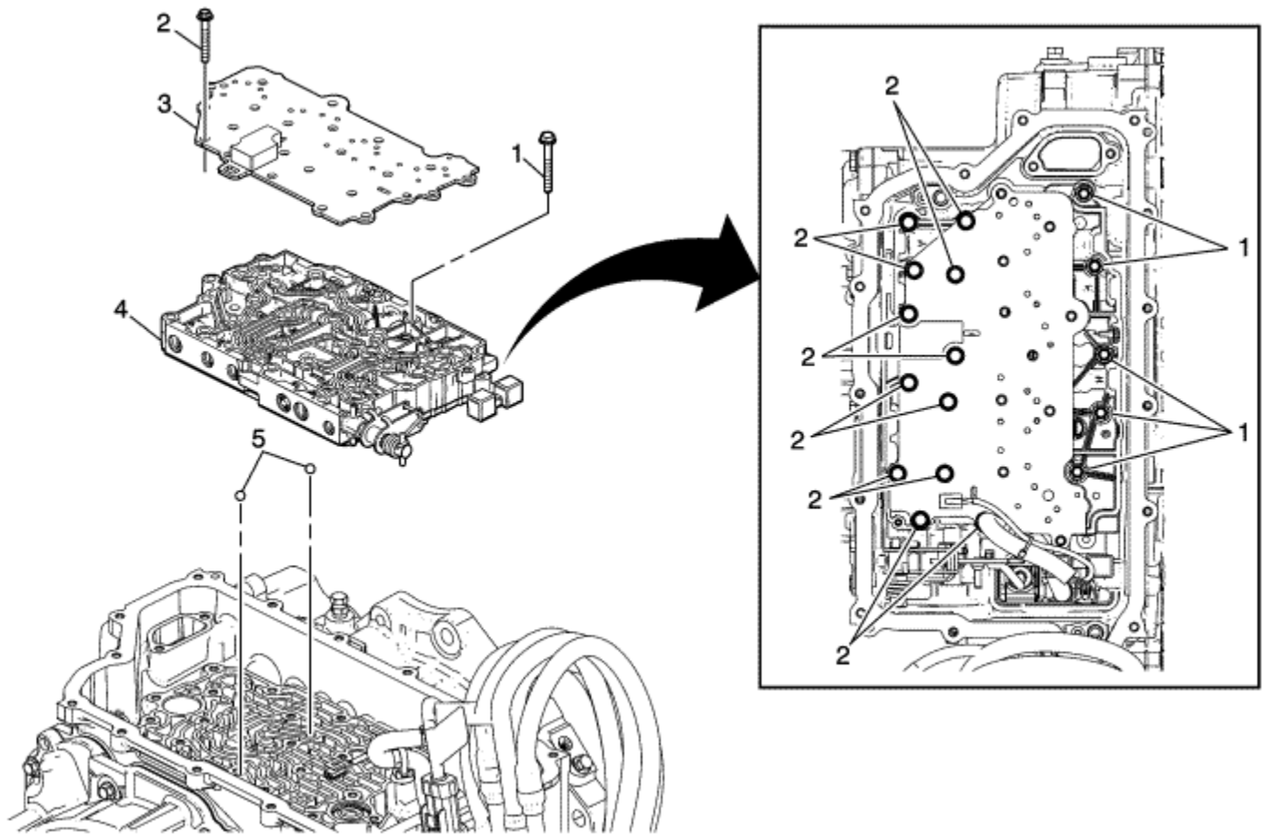

Callout	Component Name
1	Control Valve Body Bolt M6 x 42 mm (Qty: 5)
2	Control Valve Body Bolt M6 x 48 mm (Qty: 12)
3	Control Valve Channel Plate Assembly
4	Control Valve Body
5	Control Valve Body Ball Check Valve (Qty: 2)

© Copyright Chevrolet. All rights reserved

Output Shaft Removal

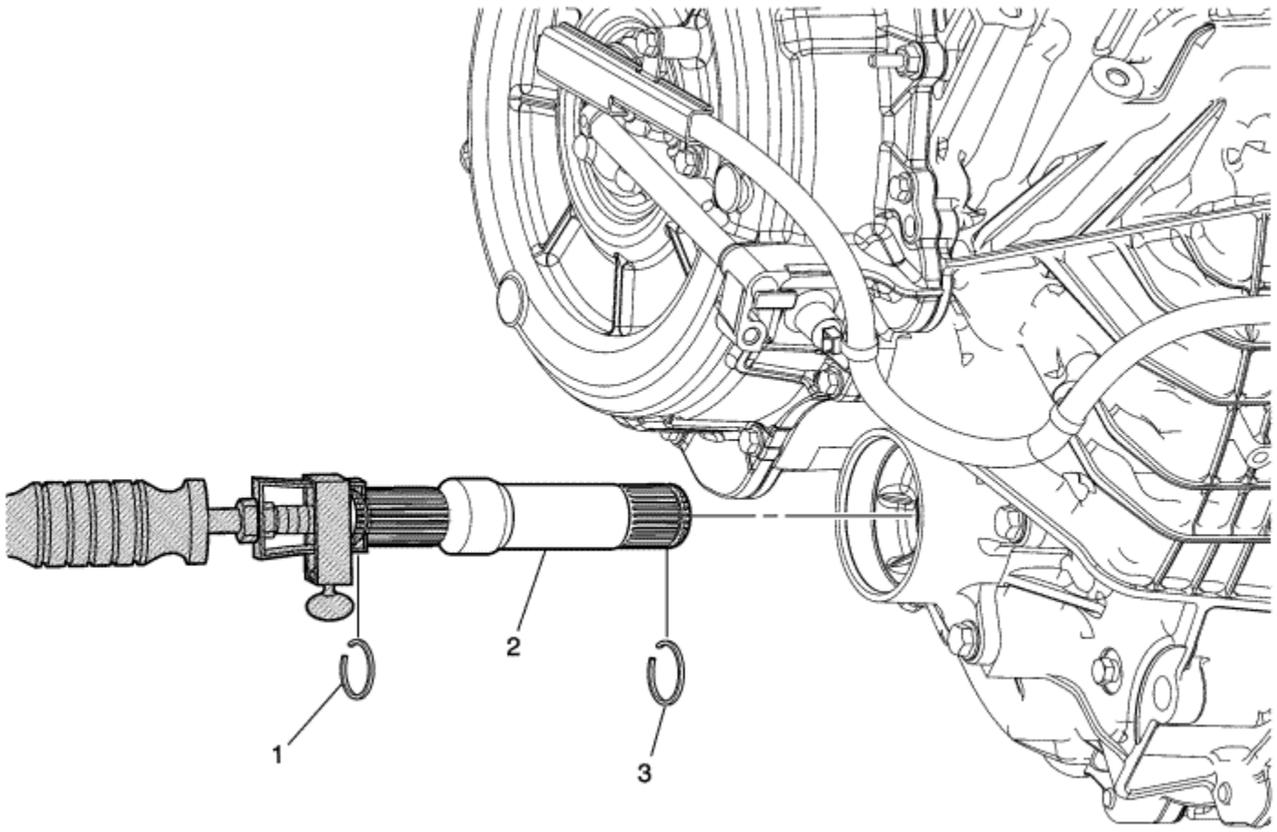

Callout	Component Name
1	Front Wheel Drive Shaft Retaining Ring **Tip** Retaining ring is not reusable. Discard after removal.
	Output Shaft Assembly

2	**Special Tools** • *GE 6125-1B* Slide Hammer With Adaptor • *DT 38868* Shaft Remover For equivalent regional tools, refer to Special Tools .
3	Front Wheel Drive Shaft Retaining Ring **Tip** Retaining ring is not reusable. Discard after removal.

&#169© Copyright Chevrolet. All rights reserved

Torque Damper and Differential Housing with Fluid Pump Removal

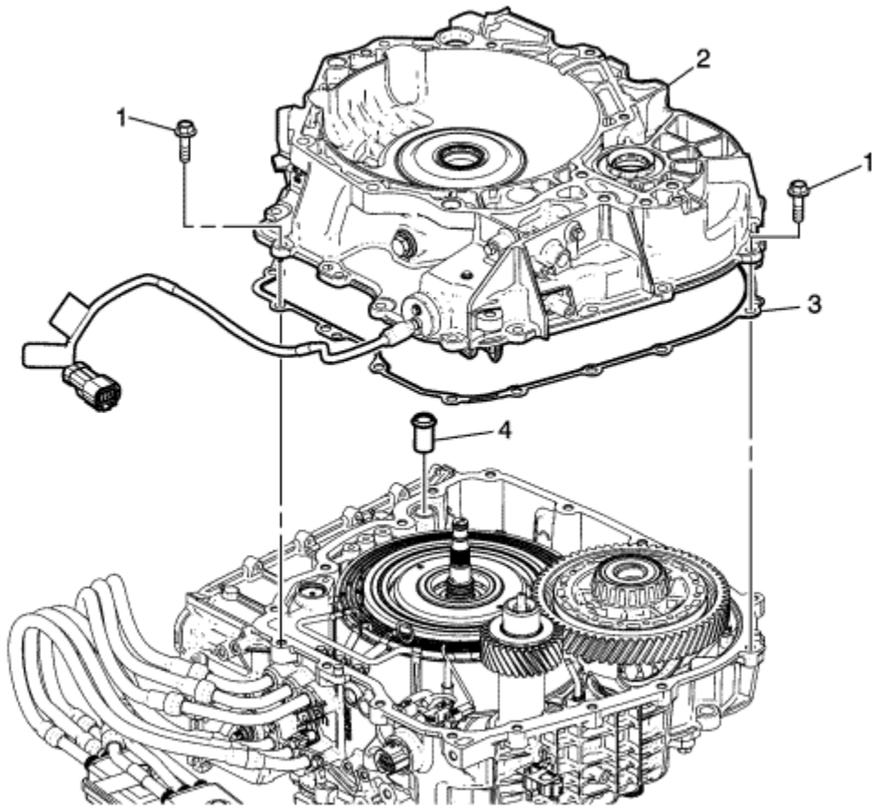

Callout	Component Name
1	Torque Damper and Differential Housing Bolt M10 x 35 mm (Qty: 17)
2	Torque Damper and Differential (w/Fluid Pump) Housing Assembly
3	Torque Damper Housing Outer Seal
4	A/Trans Fluid Outlet Seal Assembly

© Copyright Chevrolet. All rights reserved

Front Differential Carrier Assembly Removal

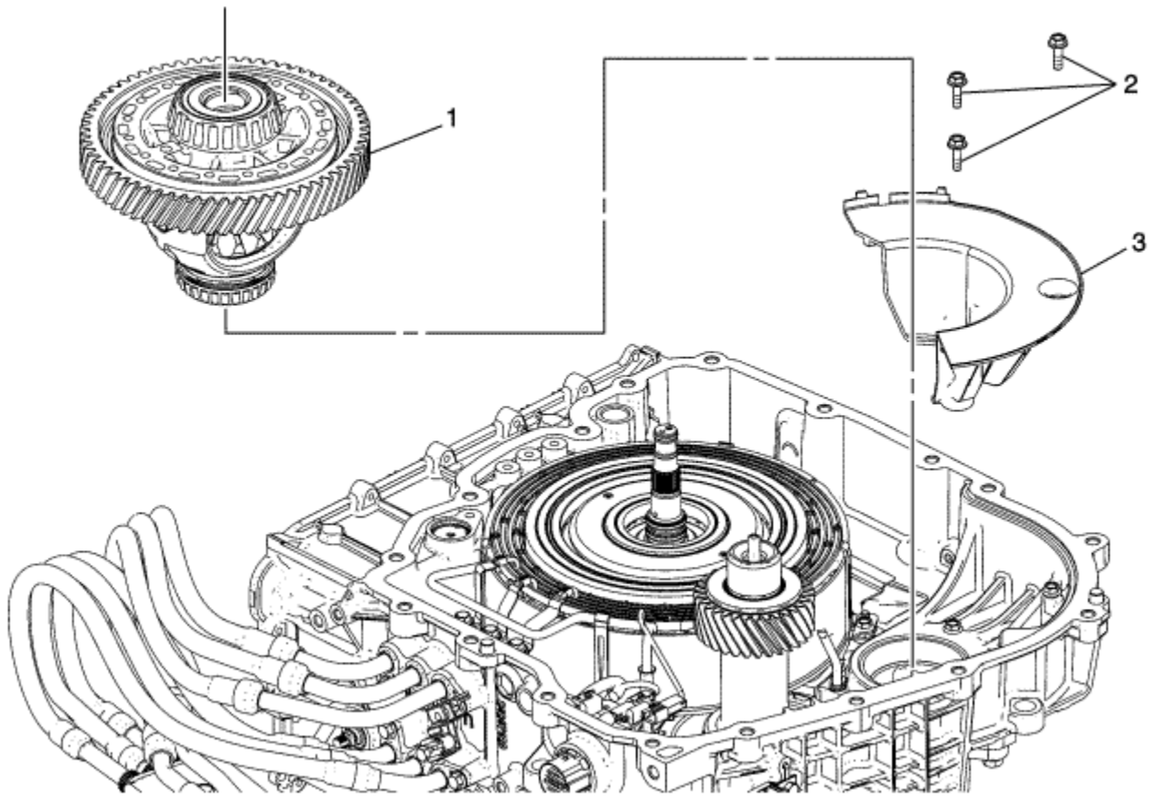

Callout	Component Name
1	Front Differential Carrier Assembly (FWD)
2	Front Differential Carrier Baffle Bolt M6 x 20 mm (Qty: 3)
3	Front Differential Carrier Baffle (Case)

© Copyright Chevrolet. All rights reserved

1-3-Reverse Clutch, Input Clutch Hub, and Hub Shaft Removal

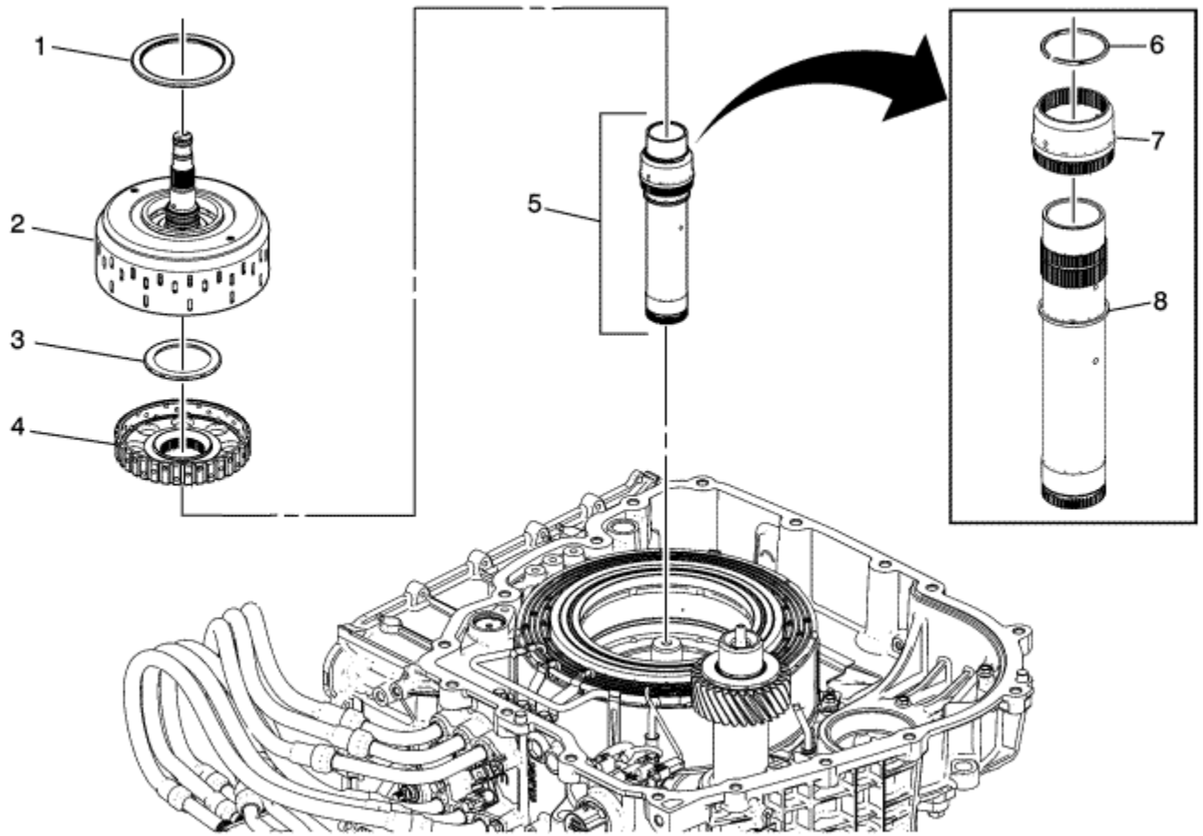

Callout	Component Name
1	1-3 Reverse Clutch Thrust Bearing Assembly
2	1-3 Reverse Clutch Assembly
3	Input Carrier Thrust Bearing Assembly
4	Input Clutch Hub
5	Input Clutch Hub Shaft Assembly

6	Input Shaft Retainer
7	Generator/Drive Motor Rotor Hub Shaft
8	Input Clutch Hub Shaft

© Copyright Chevrolet. All rights reserved

Drive Motor Generator Rotor and Stator Removal - Unit A

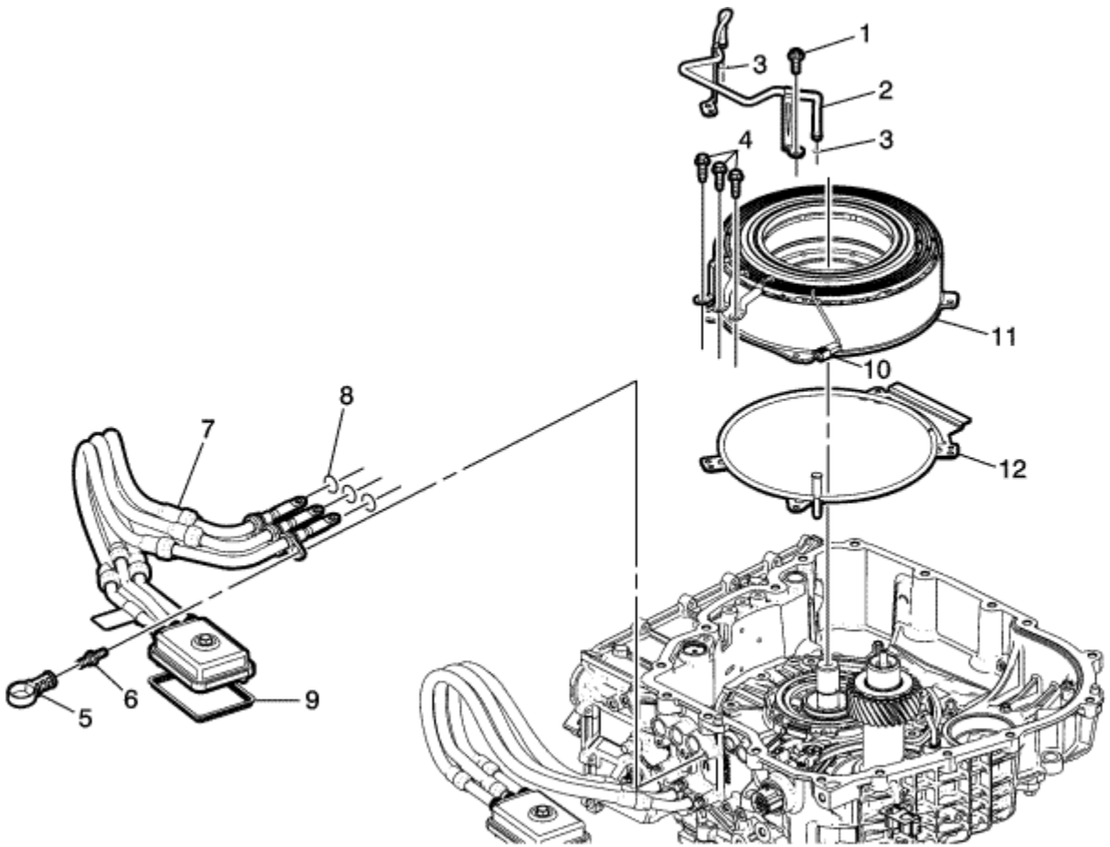

Callout	Component Name
1	Drive Motor/Generator Stator Bolt M6 x 20 mm (Qty: 4)
2	Generator/Drive Motor Stator Cooling Tube Assembly (RHS)
3	Drive Motor/Generator Stator Cooling Tube Seal (Qty: 2) **Tip** Discard seal, it is not reusable.

4	Drive Motor/Generator Power Inverter Module Cable Connector Bolt M6 x 25 mm (Qty: 3) - Internal
5	Auxiliary Pump Motor Cable Retainer - 3 Phase - Cable A/3-PH Motor
6	Drive Motor/Generator Power Inverter Module Cable Stud M6 x 20 mm (Qty: 3)
7	Drive Motor/Generator Power Inverter Module Cable Assembly - 3 Phase - A
8	Drive Motor/Generator Power Inverter Module Cable Assembly Seal - 3 Phase **Tip** Discard seal, it is not reusable.
9	Drive Motor/Generator Power Inverter Module Cable Housing Cover Seal **Tip** Discard seal, it is not reusable.
10	Temperature Sensor Connector
11	Generator/Drive Motor Rotor and Stator Assembly - Unit A **Warning:** The generator motor weighs approximately 23 kg (50 lbs). Personal injury may result if you lift the generator motor improperly.
12	Generator/Drive Motor Stator Cooling Tube Assembly (LHS) **Tip** This tube assembly may come out with the motor.

© Copyright Chevrolet. All rights reserved

Automatic Transmission Wiring Harness and Output Speed Sensor Removal

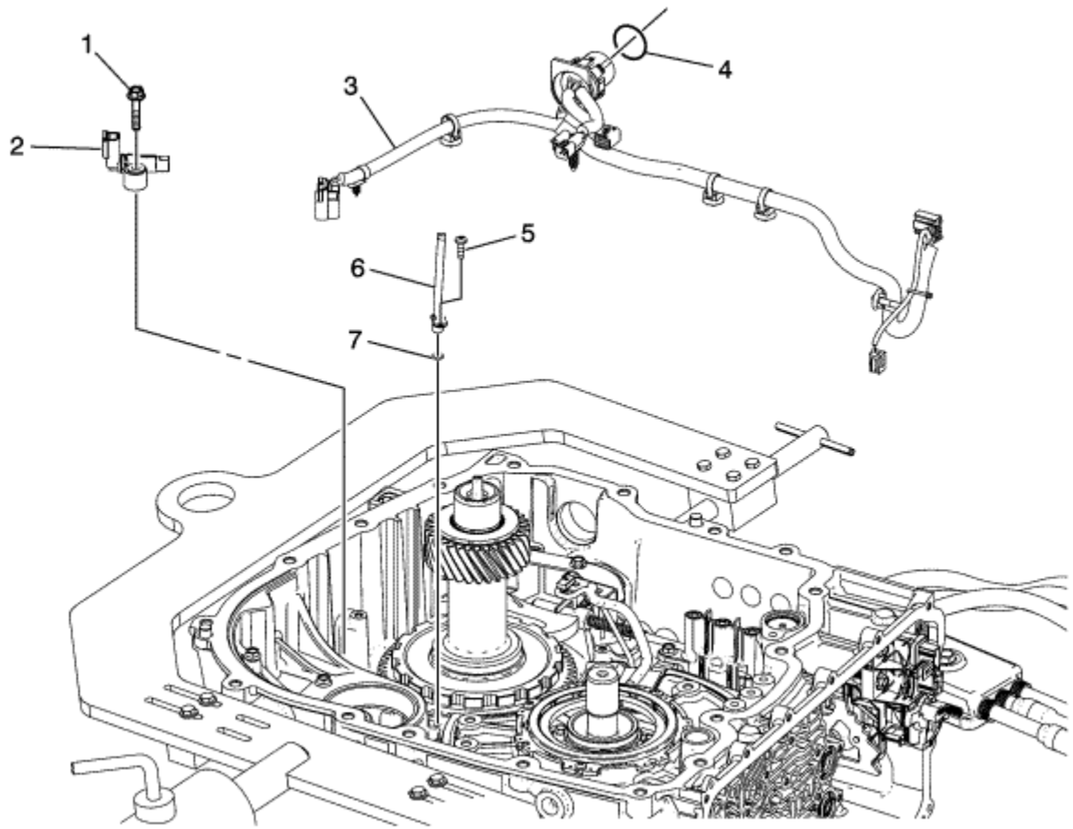

Callout	Component Name
1	A/Trans Output Speed Sensor Bolt M6 x 30 mm (Qty: 1)
2	A/Trans Output Speed Sensor Assembly **Tip** Speed sensor can be disconnected from harness after removal.
	A/Trans Wiring Harness Assembly

3	**Tip** Use a 32 mm socket to release tabs.
4	Wiring Connector Seal **Tip** Discard seal, it is not reusable.
5	Front Differential Carrier Lubricant Pipe Bolt M5 x 16 mm (Qty: 1)
6	Front Differential Carrier Lubricant Pipe
7	Front Differential Carrier Lubricant Pipe Seal **Tip** Discard seal, it is not reusable.

© Copyright Chevrolet. All rights reserved

Park Pawl and Manual Shift Shaft Removal

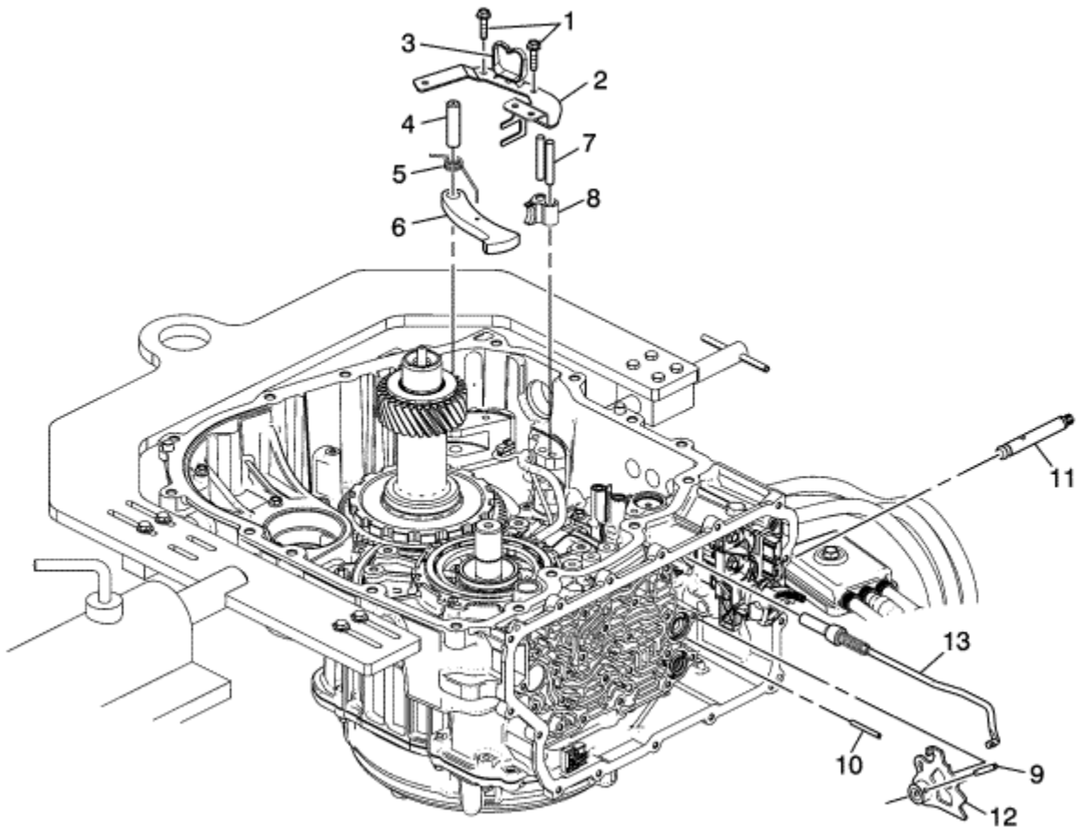

Callout	Component Name
1	Park Pawl Actuator Bolt M6 x 20 mm (Qty: 2)
2	Park Pawl Actuator Bracket
3	Wiring Harness Conduit Bracket
4	Park Pawl Shaft **Tip**

	Hold park pawl spring while removing the shaft.
5	Park Pawl Spring
6	Park Pawl
7	Park Pawl Actuator Guide Pin (Qty: 2) **Tip** Requires a magnet to remove.
8	Park Pawl Actuator Guide
9	Manual Shaft Detent Lever Hub Pin
10	Manual Shift Shaft Pin
11	Manual Shift Shaft
12	Manual Shift Shaft Detent Lever Assembly
13	Park Pawl Actuator Assembly

© Copyright Chevrolet. All rights reserved

Front Differential Drive Pinion Gear with Transfer Gear Removal

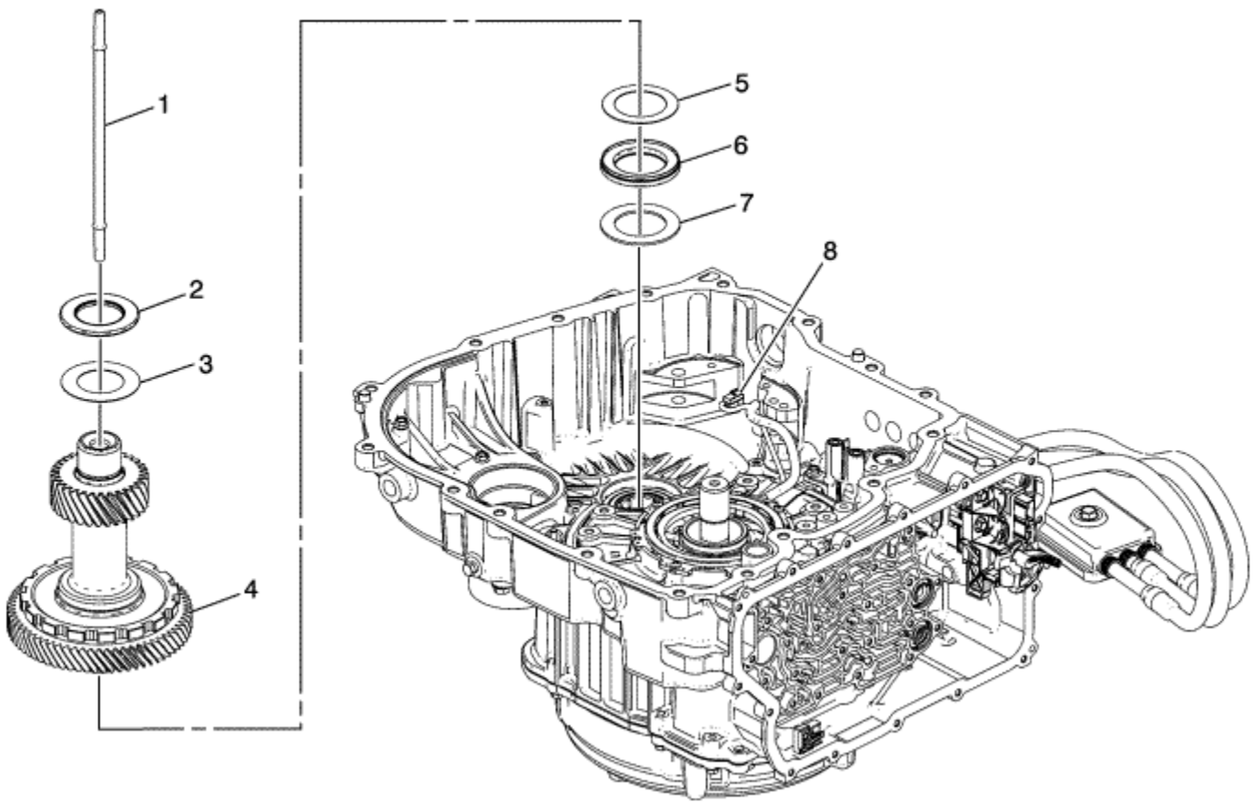

Callout	Component Name
1	Front Differential Transfer Drive Gear Fluid Passage Tube Assembly
2	Front Drive Pinion Gear Shaft Thrust Bearing Assembly - Selective (RHS)
3	Front Differential Drive Pinion Gear Bearing Thrust Washer (RHS)
4	Front Differential Drive Pinion (w/Transfer Gear) Gear Assembly
5	Front Differential Drive Pinion Gear Bearing Thrust Washer - Selective

6	Front Drive Pinion Gear Shaft Thrust Bearing Assembly (LHS)
7	Front Differential Bearing Spacer
8	Stator Assembly - Unit B Connector **Tip** 1. Disconnect the wiring harness. 2. For ease of disassembly push the connector through case hole.

© Copyright Chevrolet. All rights reserved

Front Wheel Drive Shaft Seal Removal - Case Side

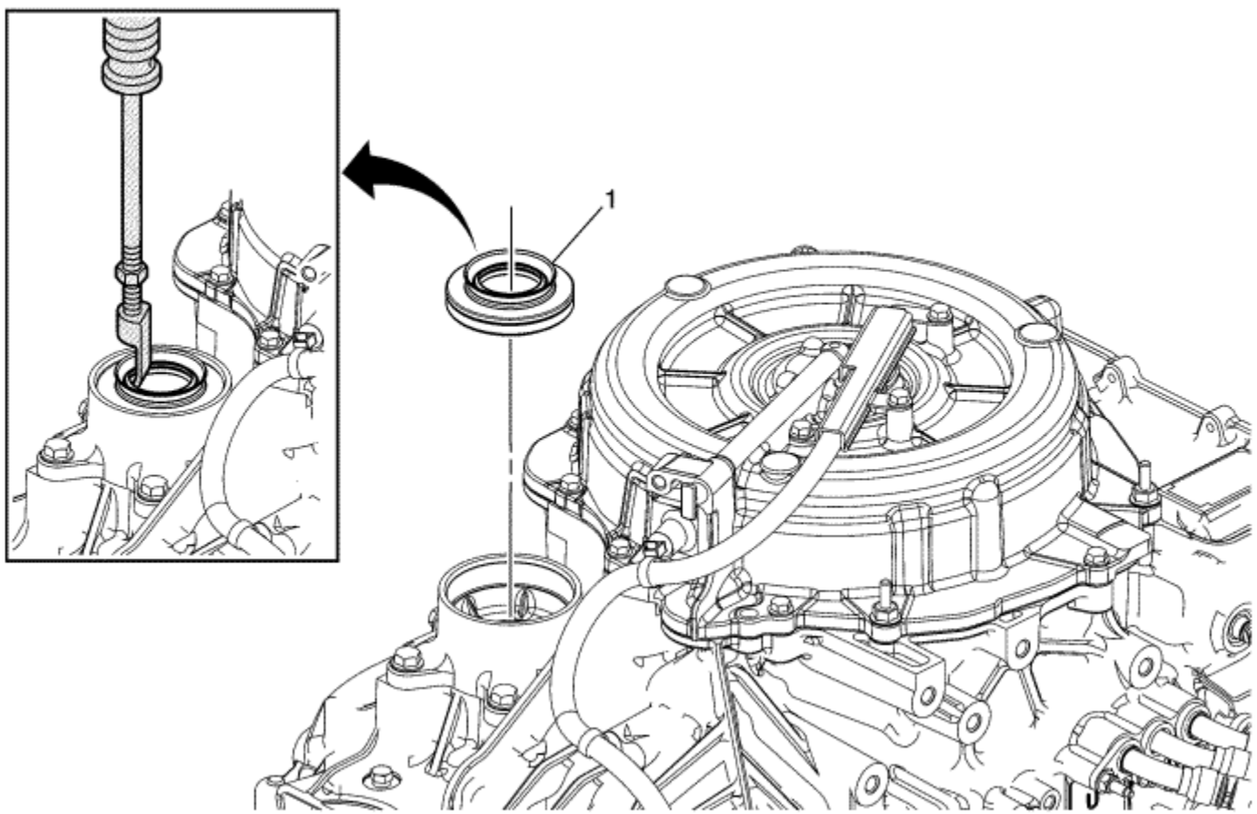

Callout	Component Name
1	Front Wheel Drive Shaft Oil Seal Assembly (LHS) **Special Tools** • *GE 6125-1B* Slide Hammer With Adaptor • *GE 23129* Universal Seal Remover

	For equivalent regional tools, refer to Special Tools .

&#169© Copyright Chevrolet. All rights reserved

Case Extension Assembly Removal

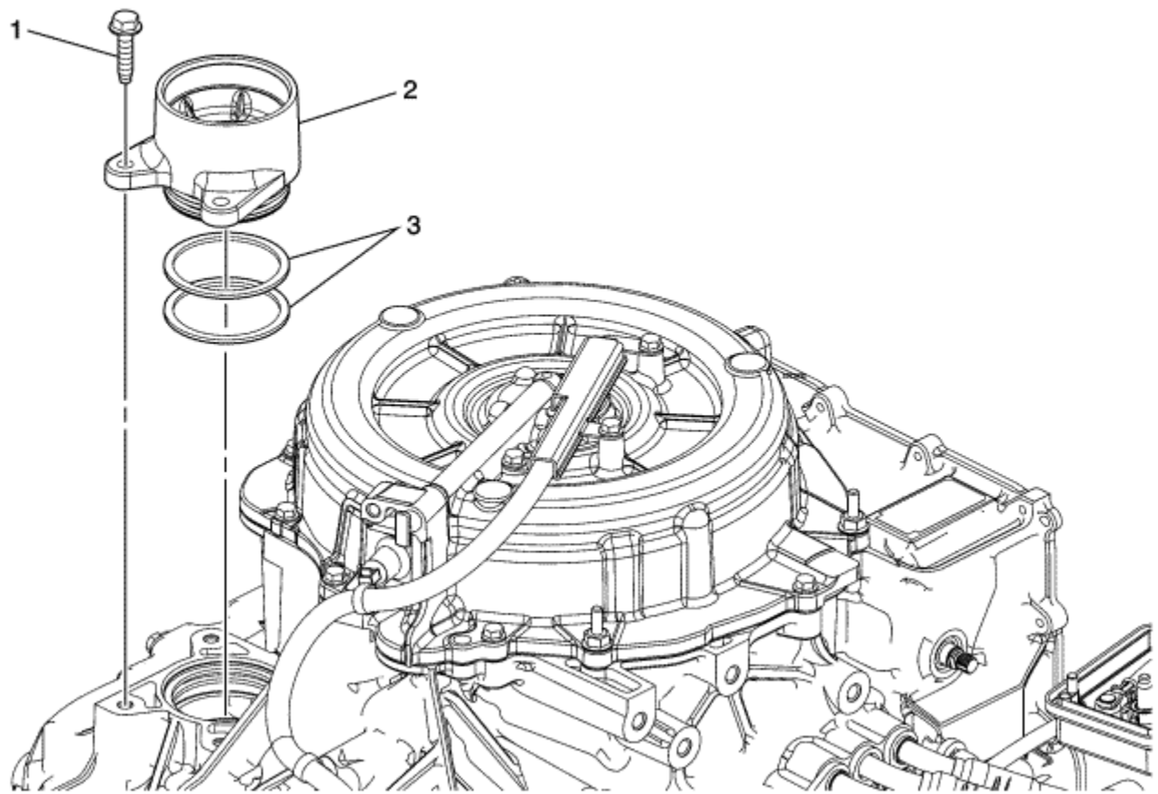

Callout	Component Name
1	Case Extension Bolt M10 x 25 mm (Qty: 3) **Tip** May require *GE 23129* universal seal remover and *GE 6125-1B* slide hammer with adaptor to remove. **Special Tools**

	• *GE 6125-1B* Slide Hammer with Adaptor • *GE 23129* Universal Seal Remover
2	Case Extension Assembly
3	A/Trans Case Extension Seal **Tip** Discard seal, it is not reusable.

&#169© Copyright Chevrolet. All rights reserved

Case Cover Removal

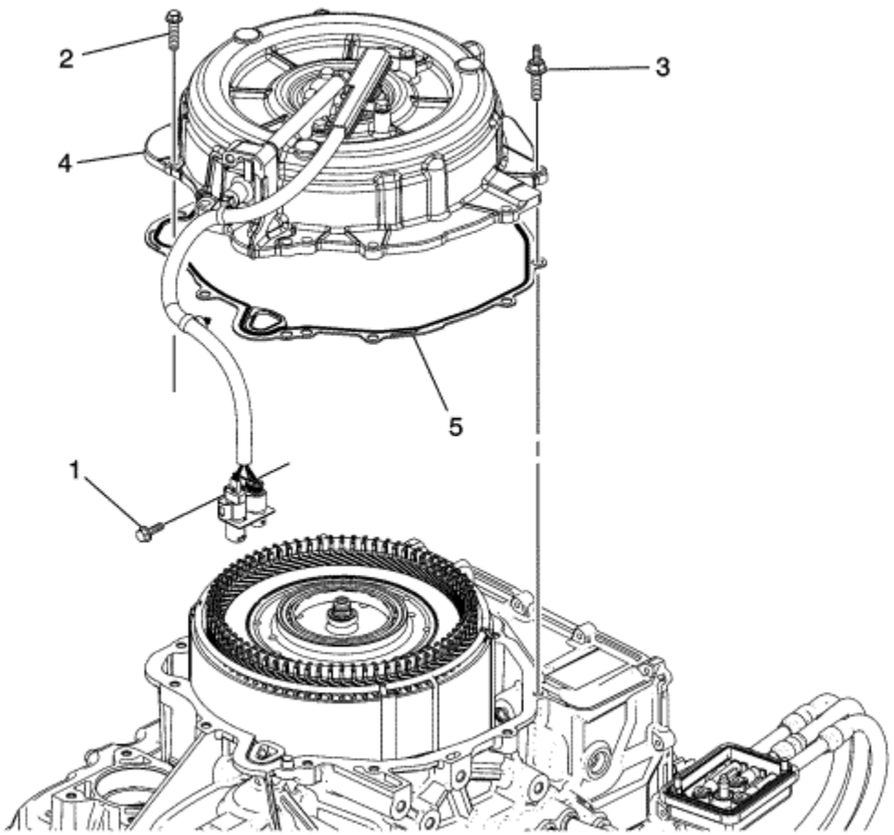

Callout	Component Name
1	A/Trans Wiring Harness Shield Bolt M6 x 20 mm (Qty: 1) - External
2	A/Trans Case Cover Bolt M8 x 30 mm (Qty: 9)
3	Case Cover Stud M8 x 30 (Qty: 2)
4	A/Trans Case Cover Assembly
5	A/Trans Case Cover Gasket

© Copyright Chevrolet. All rights reserved

Drive Motor Generator Rotor and Stator Removal - Unit B

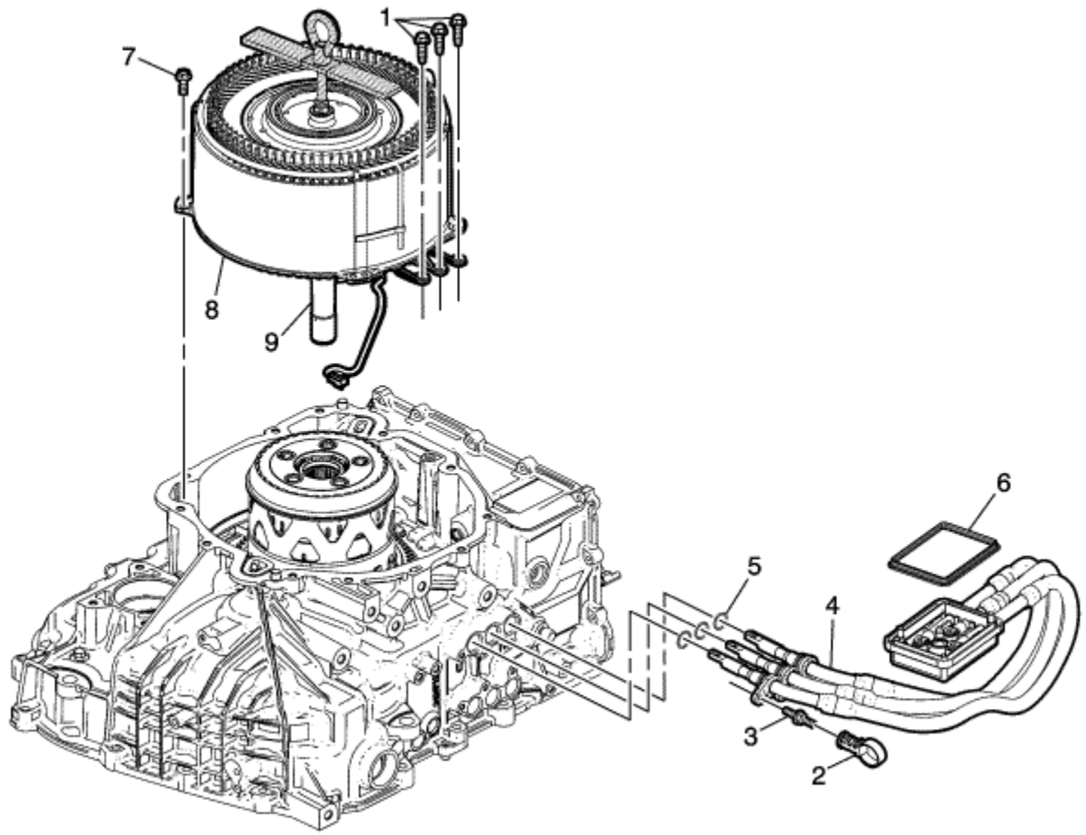

Callout	Component Name
1	Drive Motor/Generator Power Inverter Module Cable Connector Bolt M6 x 20 mm (Qty: 3) - Internal
2	Auxiliary Pump Motor Cable Retainer - 3 Phase - Cable B/Resolver
3	Drive Motor/Generator Power Inverter Module Cable Stud M6 x 20 mm (Qty: 3) - External **Tip** Remove each cable individually after each bolt is removed.

4	Drive Motor/Generator Power Inverter Module Cable Assembly - 3 Phase - B
5	Drive Motor/Generator Power Inverter Module Cable Assembly Seal - 3 Phase (Qty: 3) **Tip** Discard seal, it is not reusable.
6	Drive Motor/Generator Power Inverter Module Cable Housing Cover Seal **Tip** Discard seal, it is not reusable.
7	Drive Motor/Generator Stator Bolt M6 x 20 mm (Qty: 4)
8	Drive Motor/Generator Stator Assembly - Unit B **Warning:** The generator motor weighs approximately 36 kg (80 lbs). Personal injury may result if you lift the generator motor improperly. **Tip** The shell and or gear set may slip out of the case while removing the drive motor. **Special Tools** *DT 50302* Rotor and Stator Lifter Assembly For equivalent regional tools, refer to Special Tools .

© Copyright Chevrolet. All rights reserved

Output Sun Gear, Sun Gear Shaft, Carrier, and Carrier Shell Removal

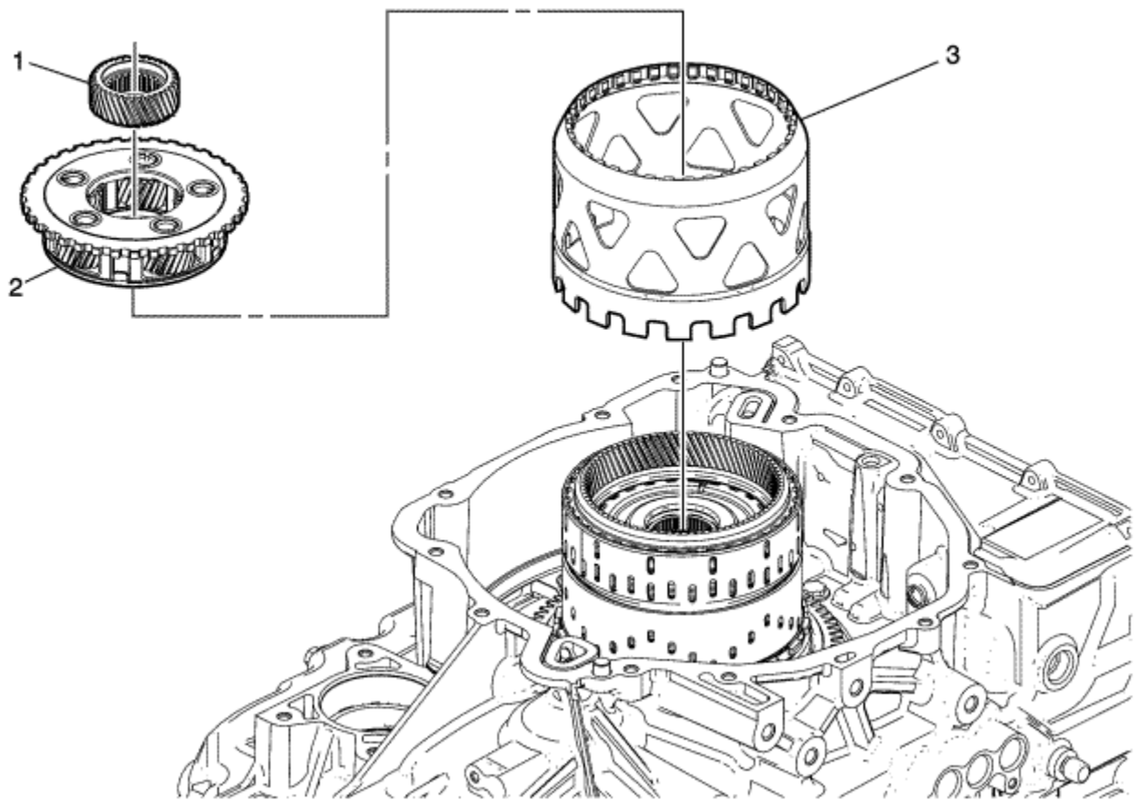

Callout	Component Name
1	Output Sun Gear Shaft Lubricant O-ring Seal **Tip** Discard seal, it is not reusable.
2	Output Sun Gear Shaft
3	Output Sun Gear

4	Output Carrier Assembly - C2
5	Output Carrier Shell

© Copyright Chevrolet. All rights reserved

Variable High and 2-3-4 Clutch Hub and Clutch Removal

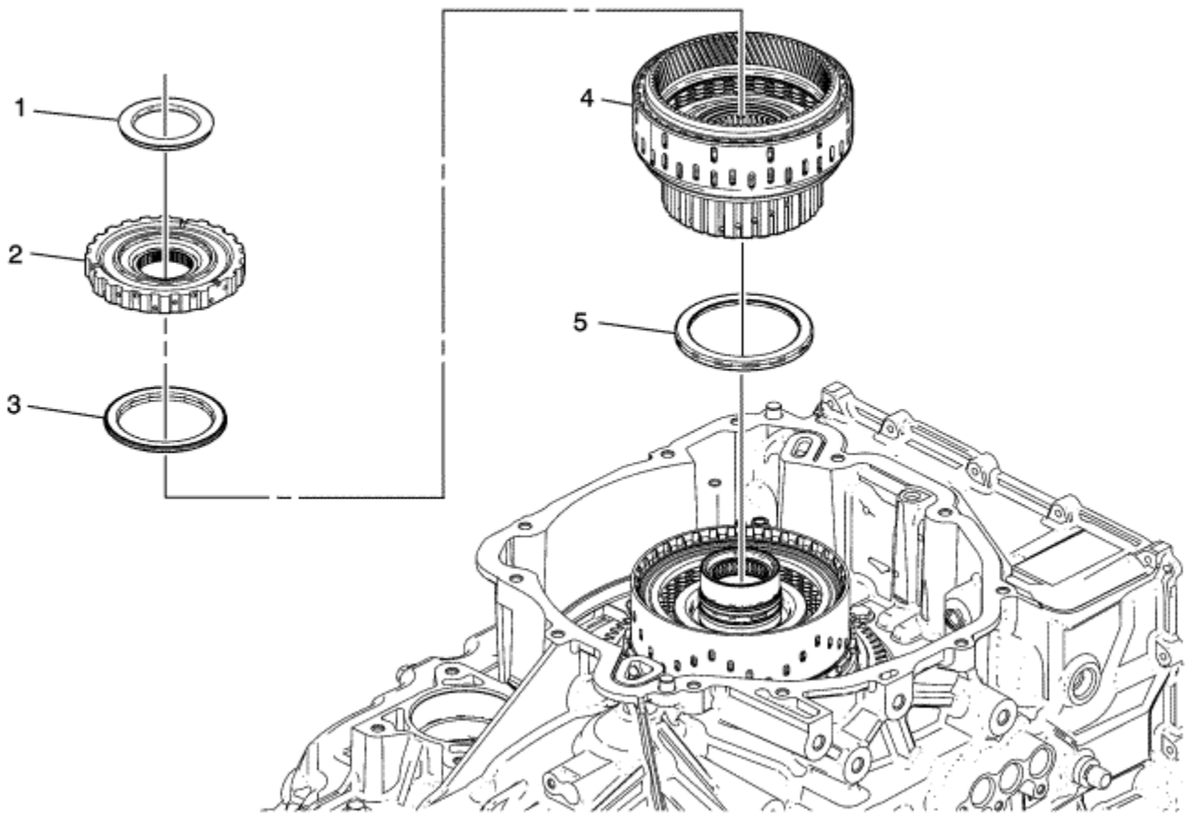

Callout	Component Name
1	Output Carrier Thrust Bearing Assembly
2	Variable Hi and 2-3-4 Clutch Hub
3	Variable Hi and 2-3-4 Clutch Hub Thrust Bearing Assembly
4	Variable Hi and 2-3-4 Clutch Assembly
5	Variable Hi and 2-3-4 Clutch Housing Thrust Bearing Assembly

© Copyright Chevrolet. All rights reserved

Centre Support Assembly Removal

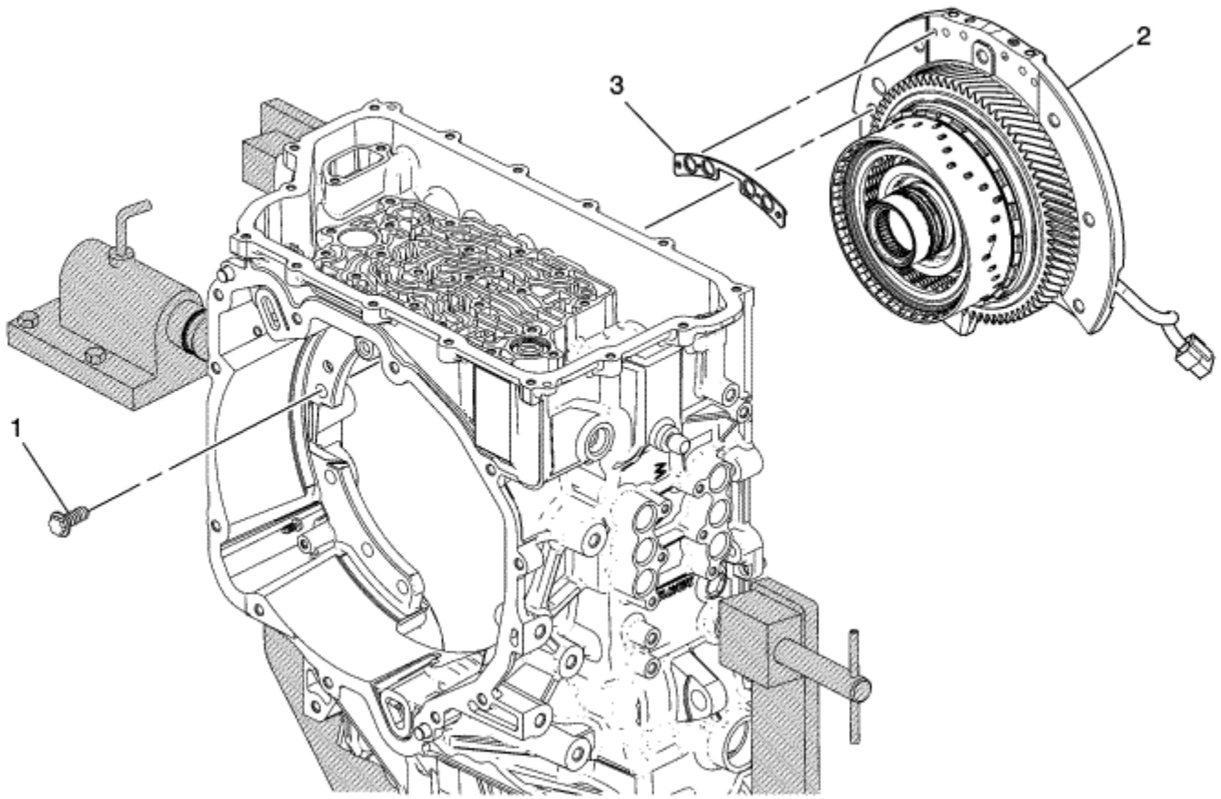

Callout	Component Name
1	Centre Support Bolt M10 x 25 mm (Qty: 9)
2	Centre (w/Variable Low and 1-2 Reverse Clutch) Support Assembly
3	Centre Support Oil Passage Seal **Tip** May be stuck to the support assembly.

© Copyright Chevrolet. All rights reserved

Drive Motor Power Inverter Module Cable Terminal Insulator Block Removal

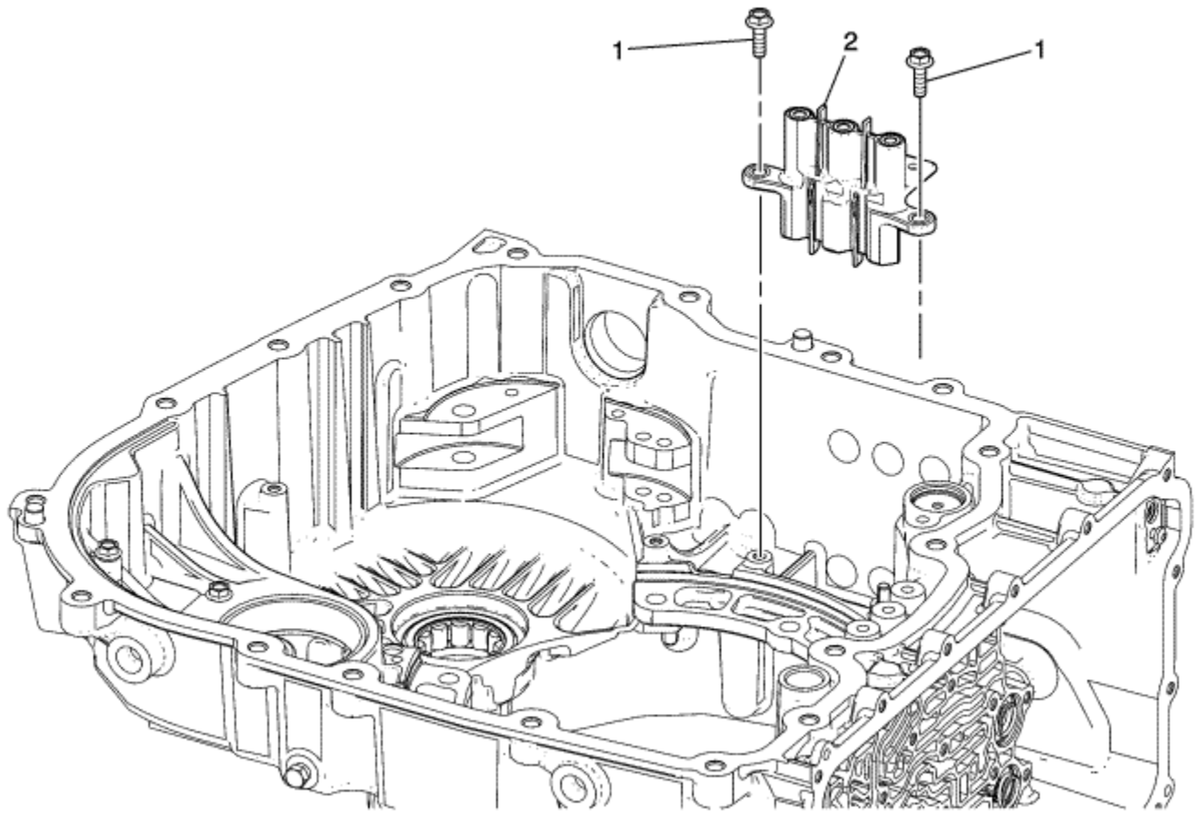

Callout	Component Name
1	Drive Motor Generator Power Inverter Module Cable Terminal Insulator Block Bolt M6 x 20 mm (Qty: 2)
2	Drive Motor Generator Power Inverter Module Cable Terminal Insulator Block Assembly

© Copyright Chevrolet. All rights reserved

Variable High and 2-3-4, Variable Low and 1-2 Reverse, and 1-3 Reverse Clutch Accumulator Piston Removal

Table 1: Variable Hi and 2-3-4 and Variable Low and 1-2 Reverse Clutch Accumulator Piston Removal
Table 2: 1-3 Reverse Clutch Accumulator Piston Removal

Variable Hi and 2-3-4 and Variable Low and 1-2 Reverse Clutch Accumulator Piston Removal

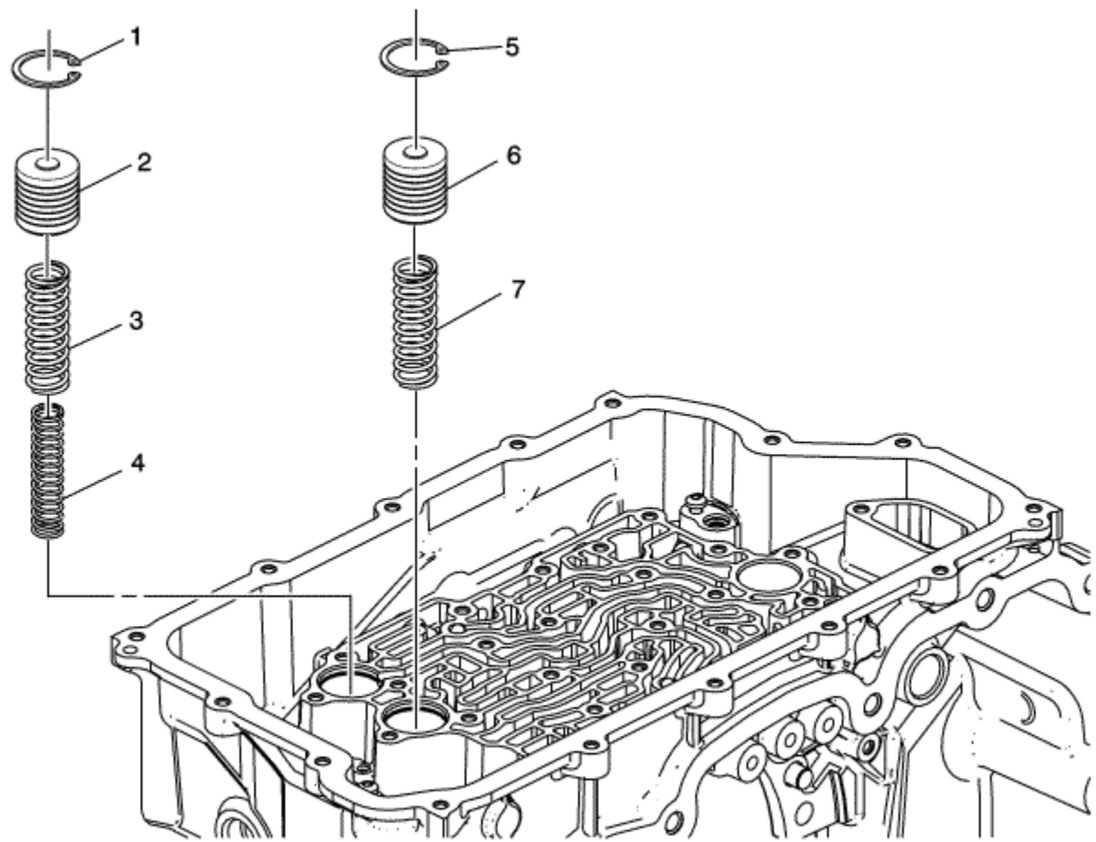

Variable Hi and 2-3-4 and Variable Low and 1-2 Reverse Clutch Accumulator Piston Removal

Callout	Component Name
1	Accumulator Piston Retaining Ring
2	Variable Hi and 2-3-4 Clutch Accumulator Piston
3	Variable Hi and 2-3-4 Clutch Accumulator Piston Spring
4	Variable Hi and 2-3-4 Clutch Accumulator Piston Spring - Inner
5	Accumulator Piston Retaining Ring
6	Variable Low and 1-2 Reverse Clutch Accumulator Piston
7	Variable Low and 1-2 Reverse Clutch Accumulator Piston Spring

1-3 Reverse Clutch Accumulator Piston Removal

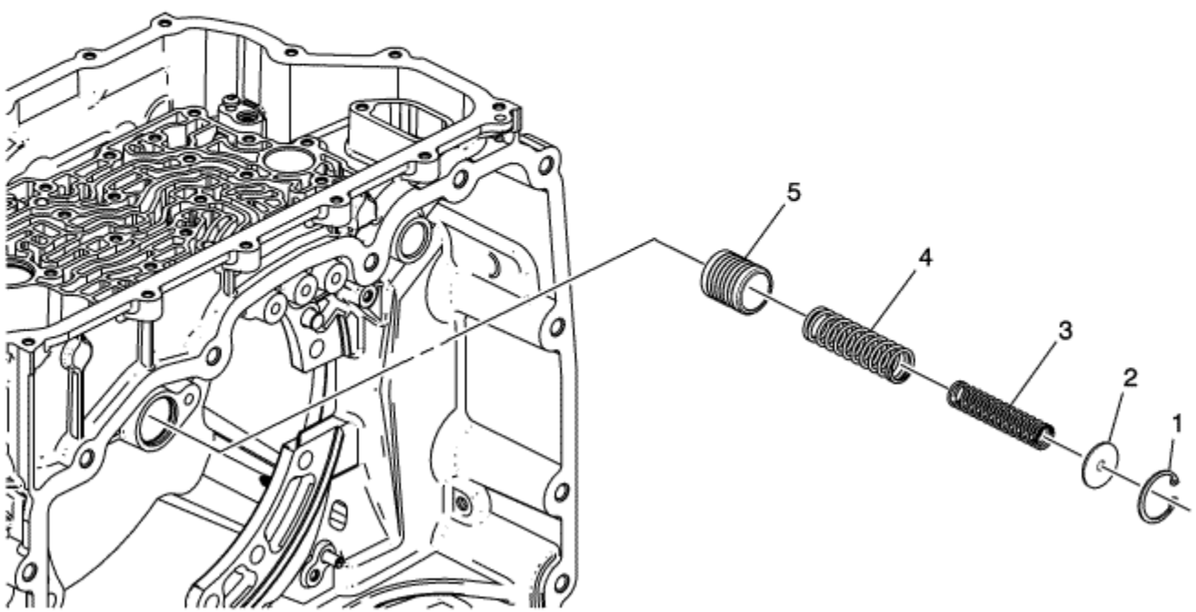

1-3 Reverse Clutch Accumulator Piston Removal

Callout	Component Name
1	Accumulator Piston Retaining Ring
2	1-3 Reverse Clutch Accumulator Piston Spring Washer
3	1-3 Reverse Clutch Accumulator Piston Spring - Internal
4	1-3 Reverse Clutch Accumulator Piston Spring - Outer
5	1-3 Reverse Clutch Accumulator Piston

© Copyright Chevrolet. All rights reserved

Transmission Case Cleaning and Inspection

Table 1: Torque Damper and Differential Side
Table 2: Case Side Cover

Torque Damper and Differential Side

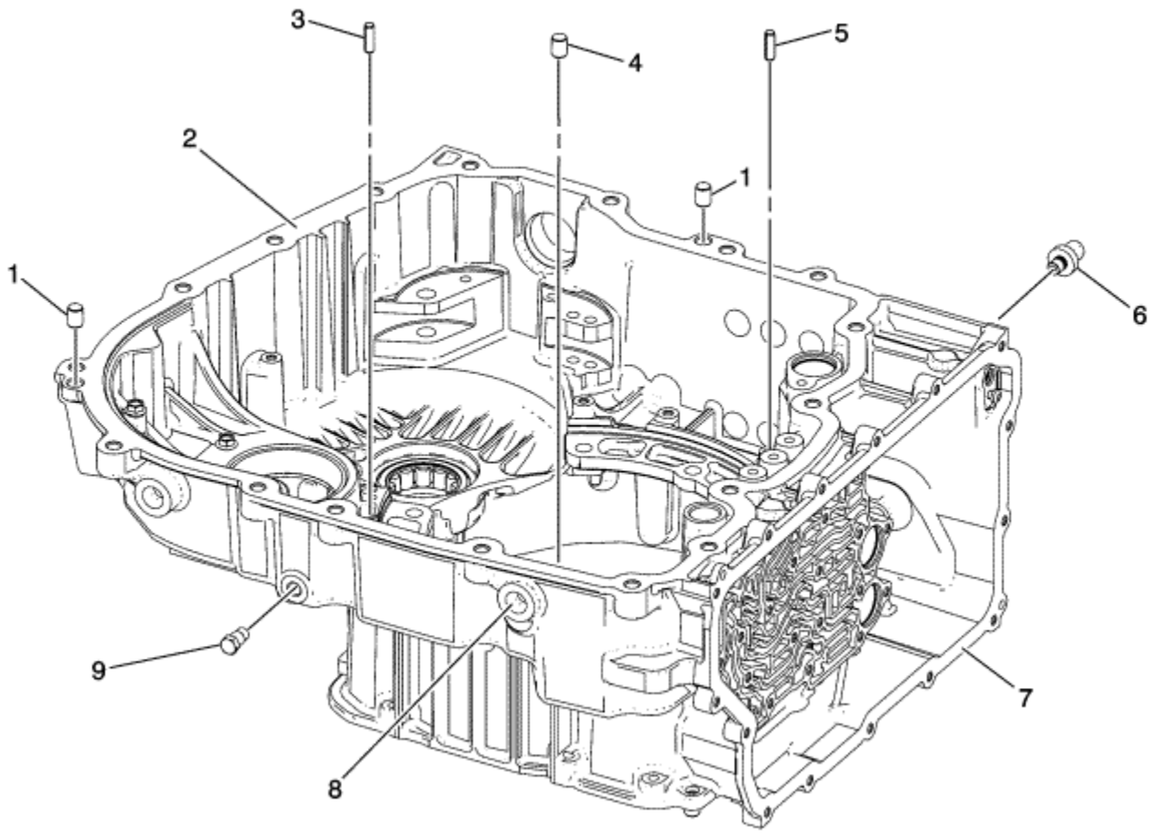

Torque Damper and Differential Side

Callout	Component Name
Caution: Do not use abrasive pads or bristle devices to clean the sealing surfaces. Abrasive pads produce a fine grit that can effect transmission function. Abrasive pads can also remove enough metal to create oil leaks. **Caution:** After cleaning the transmission components, allow to air dry. Do not use cloth or paper towels in order to dry any transmission components. Lint from the towels can cause component failure. **Caution:** Do not reuse cleaning solvents. Previously used solvents may deposit sediment which may damage the component. **Preliminary Procedures** 1. Thoroughly clean the transmission case assembly, including case threads, with clean solvent. 2. Clean gasket sealing surfaces. Remove all residual gasket material. 3. Inspect all threaded holes. If necessary, repair any thread damage.	
1	Transmission Case Locator Pin
2	Torque Damper and Differential Housing Sealing Surface
3	Generator/Drive Motor Stator Locating Pin
4	Transmission Case Locator Pin
5	Generator/Drive Motor Stator Locator Pin
6	A/Trans Vent Assembly
7	Control Valve Body Cover Sealing Surface
8	Manual Shift Shaft Seal Surface
9	Transmission Fluid Drain Plug **Caution:** Refer to Fastener Caution in the Preface section. **Tighten** 11 N·m (97.4 lb in)

Case Side Cover

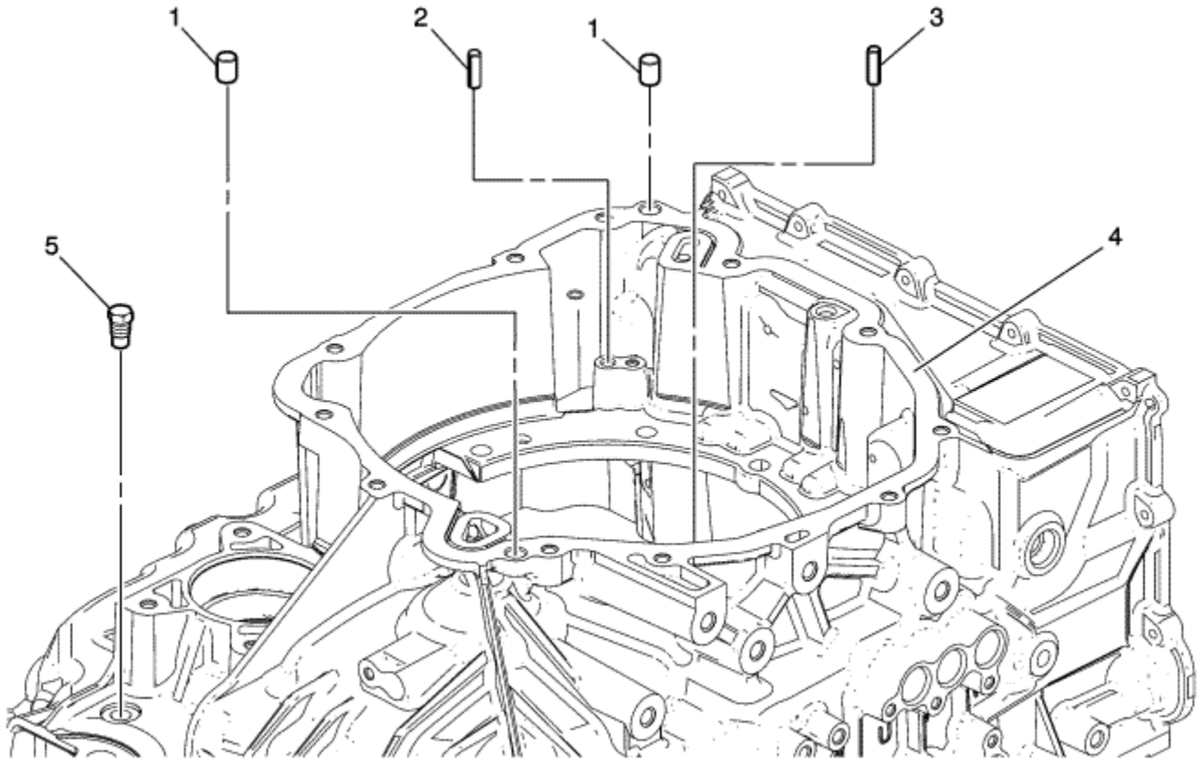

Case Side Cover

Callout	Component Name
Caution: Do not use abrasive pads or bristle devices to clean the sealing surfaces. Abrasive pads produce a fine grit that can effect transmission function. Abrasive pads can also remove enough metal to create oil leaks. **Caution:** After cleaning the transmission components, allow to air dry. Do not use cloth or paper towels in order to dry any transmission components. Lint from the towels can cause component failure. **Caution:** Do not reuse cleaning solvents. Previously used solvents may deposit sediment which may damage the component. **Preliminary Procedures** 1. Thoroughly clean the transmission case assembly, including case threads, with clean solvent. 2. Clean gasket sealing surfaces. Remove all residual gasket material.	

3. Inspect all threaded holes. If necessary, repair any thread damage.

1	Transmission Case Locator Pin
2	Generator/Drive Motor Stator Locator Pin
3	Generator/Drive Motor Stator Locator Pin
4	Case Cover Sealing Surface
5	A/Trans Fluid Level Hole Plug (Qty: 1) **Caution:** Refer to Fastener Caution in the Preface section. **Tighten** 11 N·m (97.4 lb in)

© Copyright Chevrolet. All rights reserved

Manual Shift Shaft Seal Removal

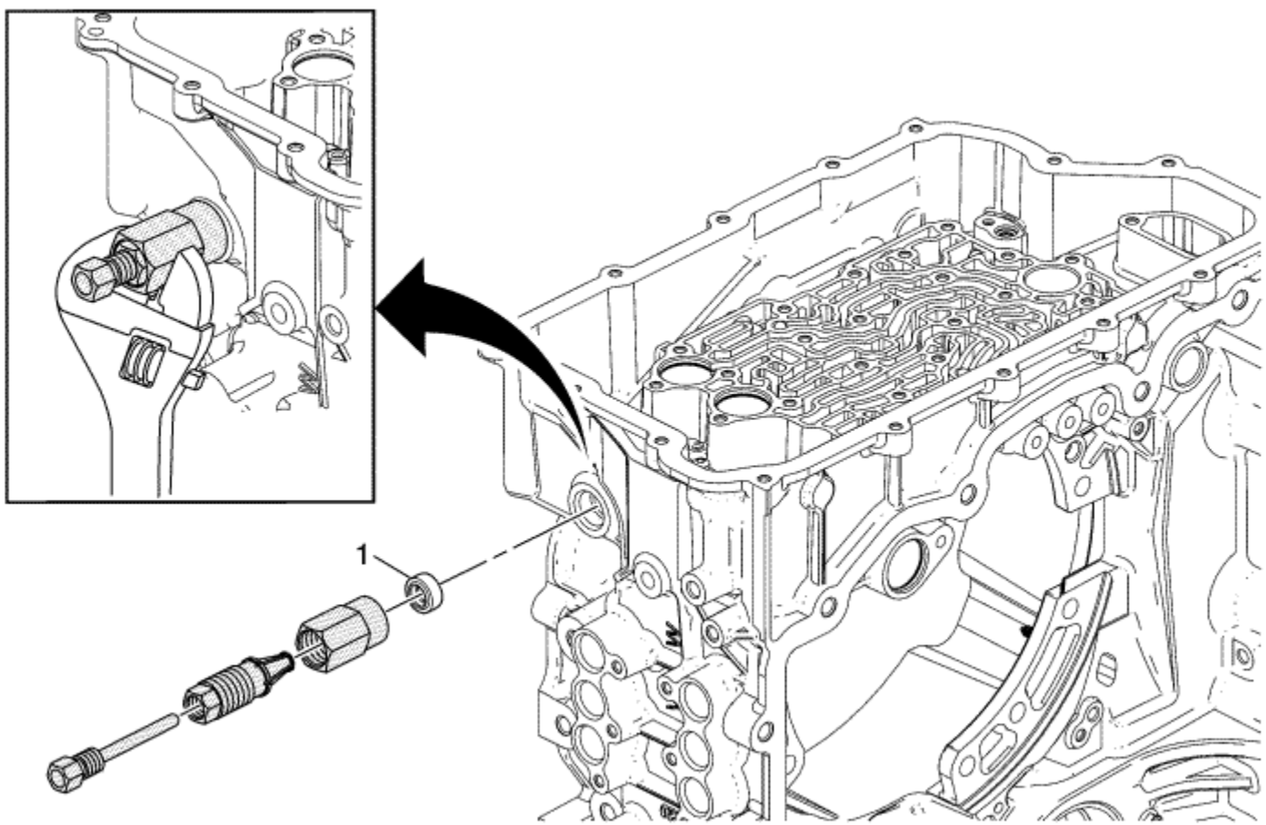

Callout	Component Name
1	Manual Shift Shaft Seal **Special Tool** *DT 45201* Cooler Line Seal Remover

	For equivalent regional tools, refer to Special Tools .

© Copyright Chevrolet. All rights reserved

Front Differential Drive Pinion Gear Bearing Cup Replacement - Case Side

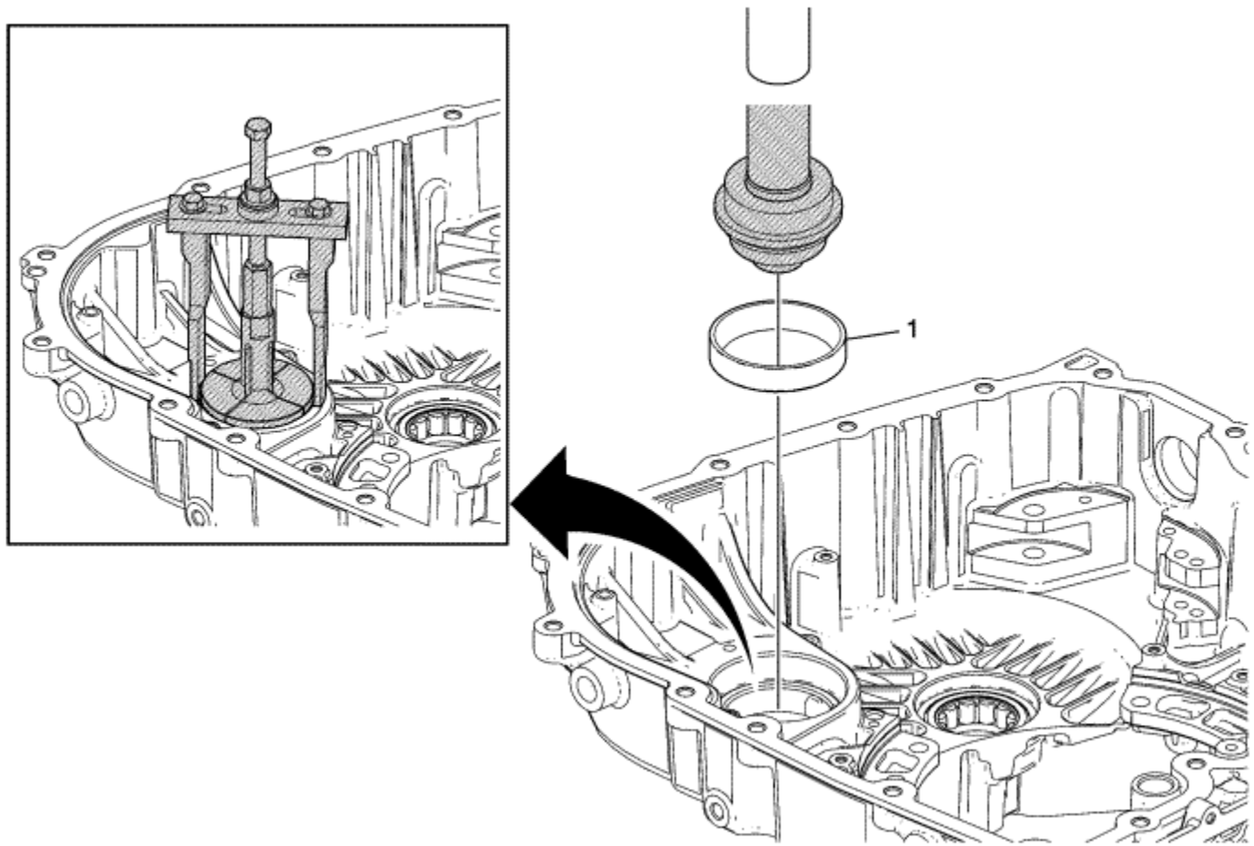

Callout	Component Name
	Front Differential Drive Pinion Gear Bearing Cup **Caution:** Support the back side of the torque damper housing while installing the bearing cup. Install the bearing cup until it stops moving. Applying excessive pressure to the bearing cup once it is seated could cause damage to the torque Damper housing casting. **Caution:** Failure to apply the lubricant will cause damage to the bolt and nut threads.

1	**Procedure** 1. Tighten DT 49266 until it fits snugly on the bearing cup. 2. Adjust DT 45124 so it sits on the torque converter housing surface just beyond the bearing cup opening. 3. Apply the extreme pressure lubricant DT 23444-A to the puller bolt threads to prevent damage to the bolt threads during bearing cup removal. 4. Hold the puller bridge bolt and turn the nut to remove the bearing cup. 5. Use an bearing press with DT-49263 and GE 8092 to install. **Special Tools** • *DT 45124* Removal Bridge • *DT-49263* Bearing Cup Installer • *DT-49266* Bearing Cup Remover • *GE 8092* Driver Handle • *DT 23444-A* Extreme Press Lubricant - 1/4 Ounce Tube For equivalent regional tools, refer to Special Tools .

&#169© Copyright Chevrolet. All rights reserved

Front Differential Drive Pinion Gear Roller Bearing and Lubricant Dam Replacement

Table 1: Removal
Table 2: Install

Removal

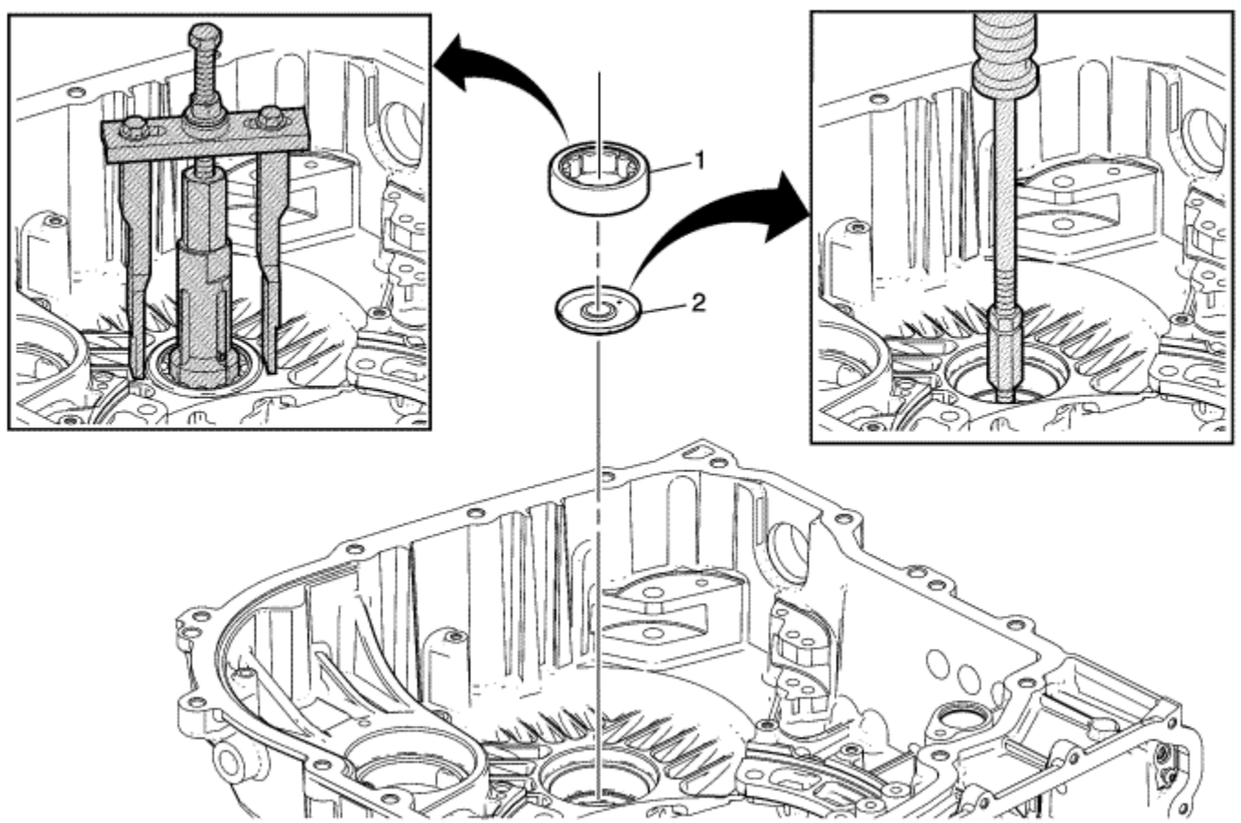

Removal

Callout	Component Name
1	Front Differential Drive Pinion Gear Roller Bearing Assembly (Case Housing) **Procedure** Tighten DT-49230-2 until it fits snugly on the bearing. **Special Tools** • *DT 45124* Removal Bridge • *DT-49230-2* Transfer Shaft Bearing Remover For equivalent regional tools, refer to Special Tools .
2	Front Differential Drive Pinion Gear Lubricant Dam **Special Tools** • *DT-48055* Lubricant Dam Remover • *GE 6125-1B* Slide Hammer With Adaptor For equivalent regional tools, refer to Special Tools .

Install

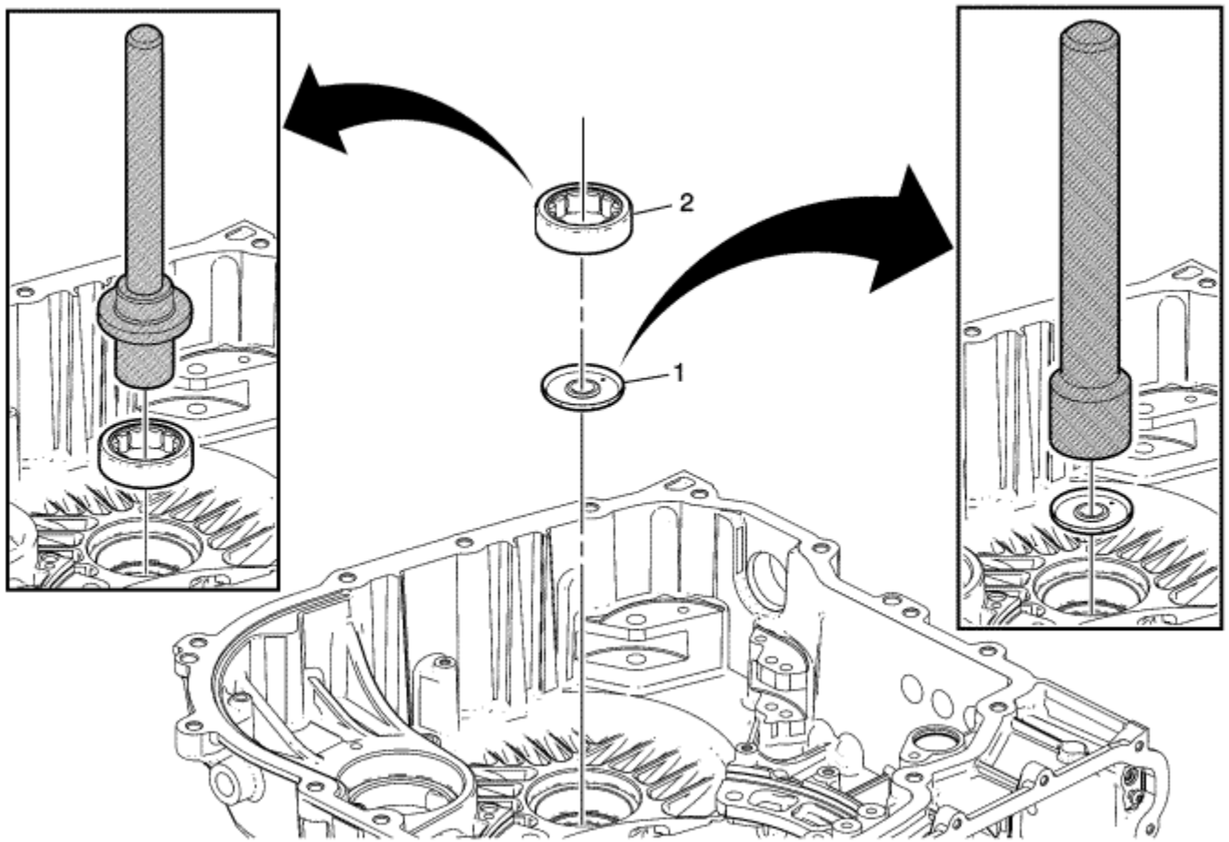

Install

Callout	Component Name
1	Front Differential Drive Pinion Gear Lubricant Dam **Special Tools** • *DT-46630* Lubricant Dam Installer • *GE 8092* Driver Handle For equivalent regional tools, refer to Special Tools .
	Front Differential Drive Pinion Gear Roller Bearing Assembly (Case Housing) **Special Tools**

2	• *DT-49229* Transfer Shaft Bearing Installer • *GE 8092* Driver Handle For equivalent regional tools, refer to Special Tools .

&#169© Copyright Chevrolet. All rights reserved

Variable High and 2-3-4, Variable Low and 1-2 Reverse, and 1-3 Reverse Clutch Accumulator Piston Installation

Table 1: Variable Hi and 2-3-4 and Variable Low and 1-2 Reverse Clutch Accumulator Piston Installation
Table 2: 1-3 Reverse Clutch Accumulator Piston Installation

Variable Hi and 2-3-4 and Variable Low and 1-2 Reverse Clutch Accumulator Piston Installation

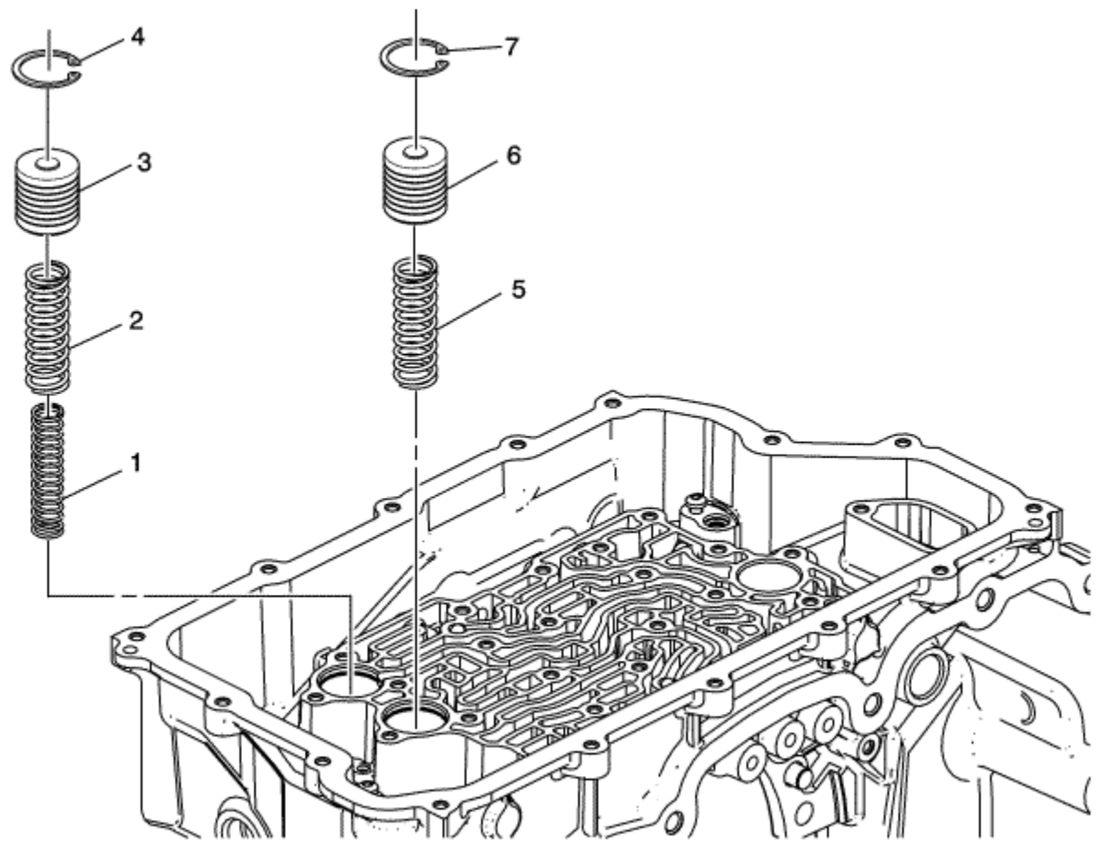

Variable Hi and 2-3-4 and Variable Low and 1-2 Reverse Clutch Accumulator Piston Installation

Callout	Component Name
1	Variable Hi and 2-3-4 Clutch Accumulator Piston Spring - Inner
2	Variable Hi and 2-3-4 Clutch Accumulator Piston Spring
3	Variable Hi and 2-3-4 Clutch Accumulator Piston
4	Accumulator Piston Retaining Ring
5	Variable Low and 1-2 Reverse Clutch Accumulator Piston Spring
6	Variable Low and 1-2 Reverse Clutch Accumulator Piston
7	Accumulator Piston Retaining Ring

1-3 Reverse Clutch Accumulator Piston Installation

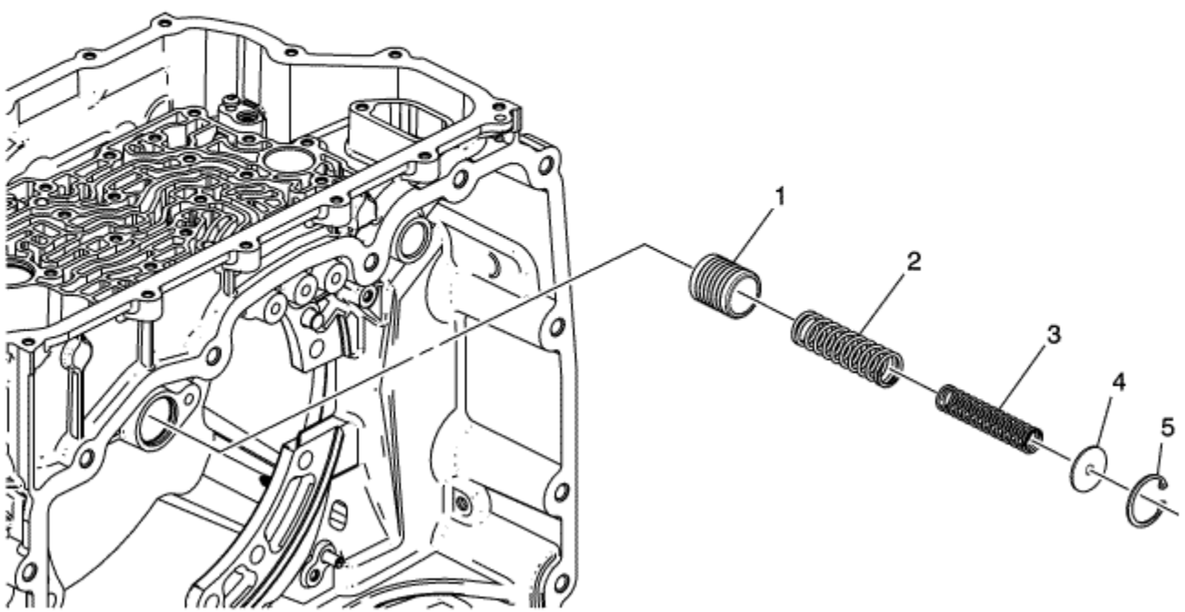

1-3 Reverse Clutch Accumulator Piston Installation

Callout	Component Name
1	1-3 Reverse Clutch Accumulator Piston
2	1-3 Reverse Clutch Accumulator Piston Spring - Outer
3	1-3 Reverse Clutch Accumulator Piston Spring - Internal
4	1-3 Reverse Clutch Accumulator Piston Spring Washer
5	Accumulator Piston Retaining Ring

© Copyright Chevrolet. All rights reserved

Drive Motor Power Inverter Module Cable Terminal Insulator Block Installation

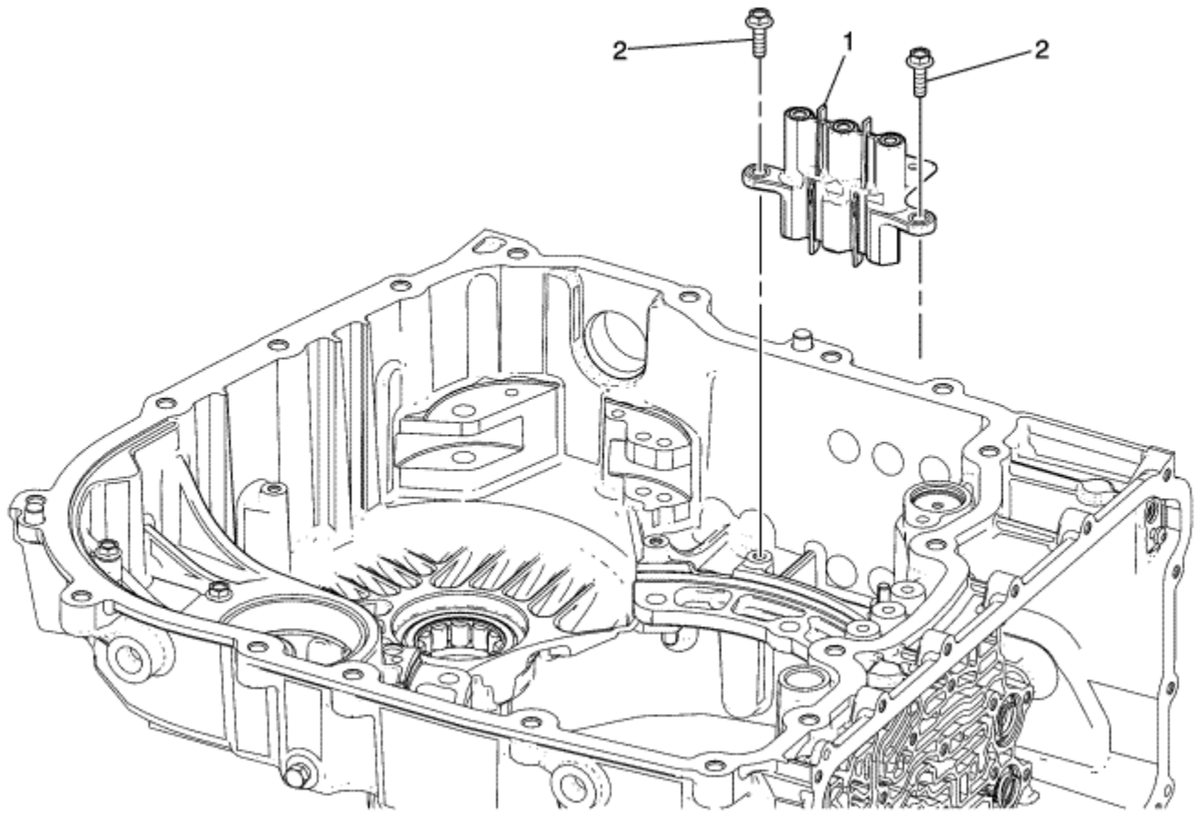

Callout	Component Name
1	Drive Motor Generator Power Inverter Module Cable Terminal Insulator Block Assembly
2	Drive Motor Generator Power Inverter Module Cable Terminal Insulator Block Bolt M6 x 20 mm (Qty: 2) **Caution:** Use the correct fastener in the correct location. Replacement fasteners must be the correct part number for that application. Fasteners requiring replacement or fasteners requiring the use of thread locking compound or sealant are identified in the service procedure. Do not use paints, lubricants, or corrosion inhibitors on fasteners or fastener joint surfaces unless specified. These coatings affect fastener torque and joint clamping force and may damage the fastener. Use

	the correct tightening sequence and specifications when installing fasteners in order to avoid damage to parts and systems. **Tighten** 9 N·m (80 lb in)

© Copyright Chevrolet. All rights reserved

Torque Damper and Differential Housing with Fluid Pump Disassemble

Table 1: A/Trans Fluid Pump Assembly Removal
Table 2: Front Differential Carrier Baffle, and Fluid Trough Removal

A/Trans Fluid Pump Assembly Removal

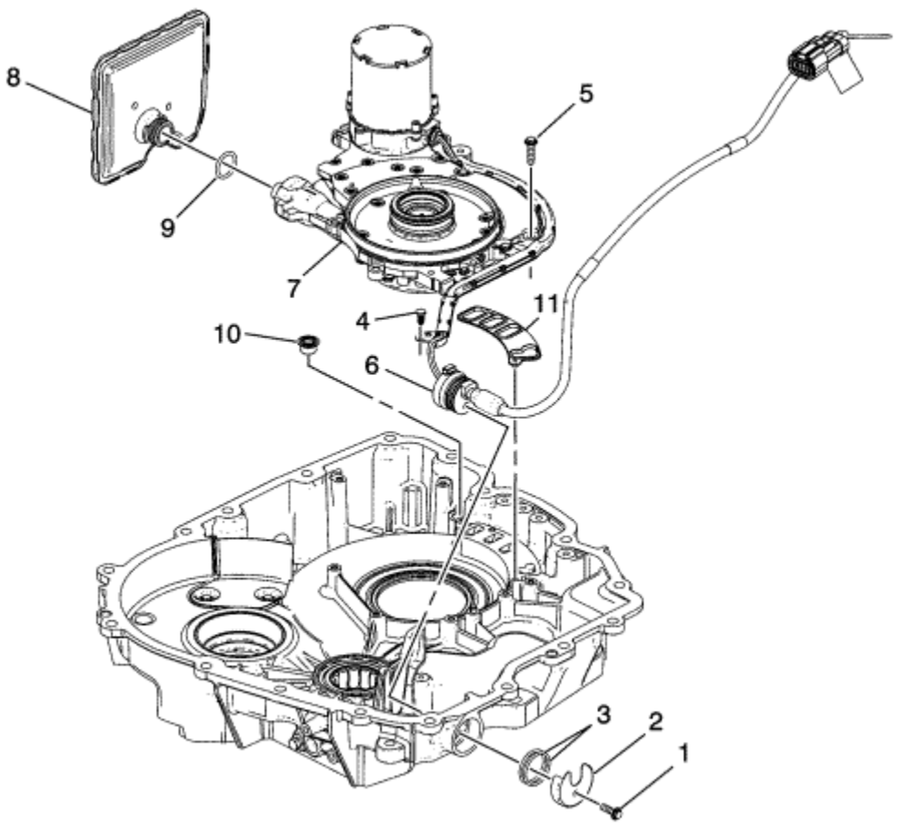

A/Trans Fluid Pump Assembly Removal

Callout	Component Name
1	Auxiliary Fluid Motor Retainer Bolt M6 x 20 mm (Qty: 1)
2	Auxiliary Fluid Motor Retainer
3	O-Ring Seal **Tip** Discard seal, it is not reusable.
4	A/Trans Auxiliary Fluid Pump Motor (3 Phase) Cable Retainer M6 x 20 mm (Qty: 1)
5	A/Trans Fluid Pump Bolt M6 x 25 mm (Qty: 8)
6	A/Trans Auxiliary Fluid Pump Connector
7	A/Trans Fluid Pump Assembly
8	A/Trans Fluid Filter **Tip** Rotate until tab on filter aligns with slot on pump housing.
9	A/Trans Fluid Filter Seal **Tip** Discard seal, it is not reusable.
10	A/Trans Pump Fluid Outlet Seal Assembly
11	A/Trans Fluid Pump Seal Assembly

Front Differential Carrier Baffle, and Fluid Trough Removal

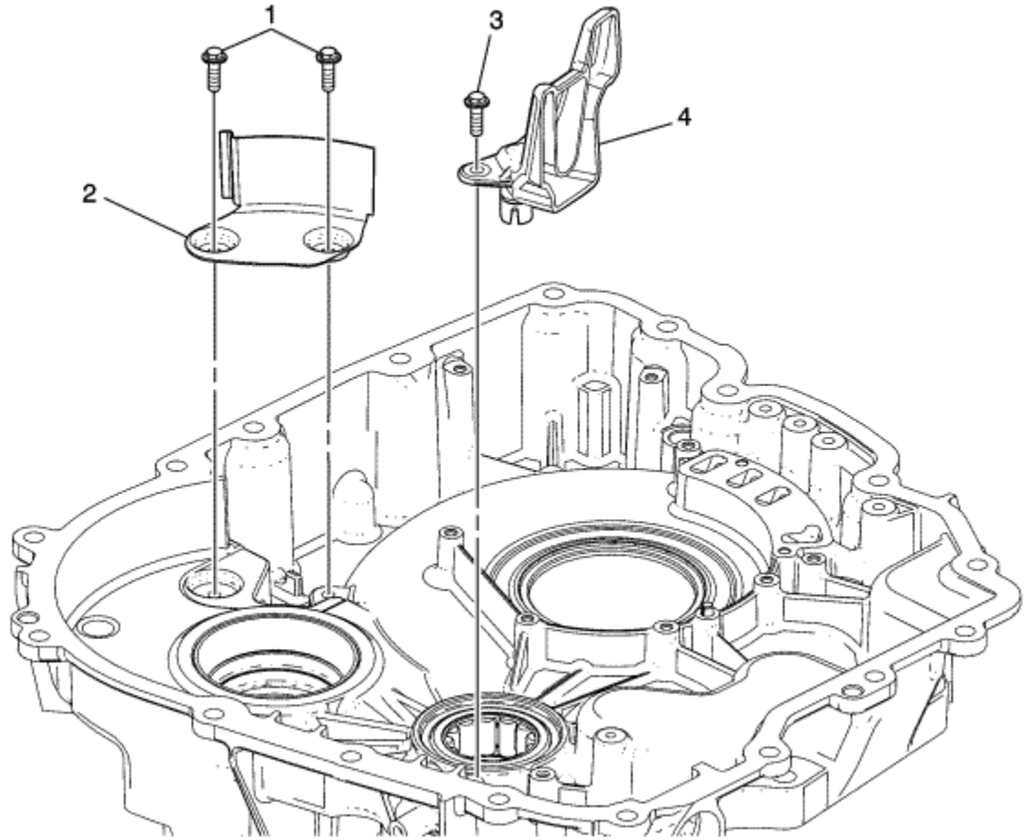

Front Differential Carrier Baffle, and Fluid Trough Removal

Callout	Component Name
1	Front Differential Carrier Baffle Bolt M6 x 20 mm (Qty: 2)
2	Front Differential Carrier Baffle (Housing)
3	A/Trans Fluid Trough Bolt M6 x 20 mm (Qty: 2)
4	A/Trans Fluid Trough Assembly

© Copyright Chevrolet. All rights reserved

Torque Damper and Differential Housing Cleaning and Inspection

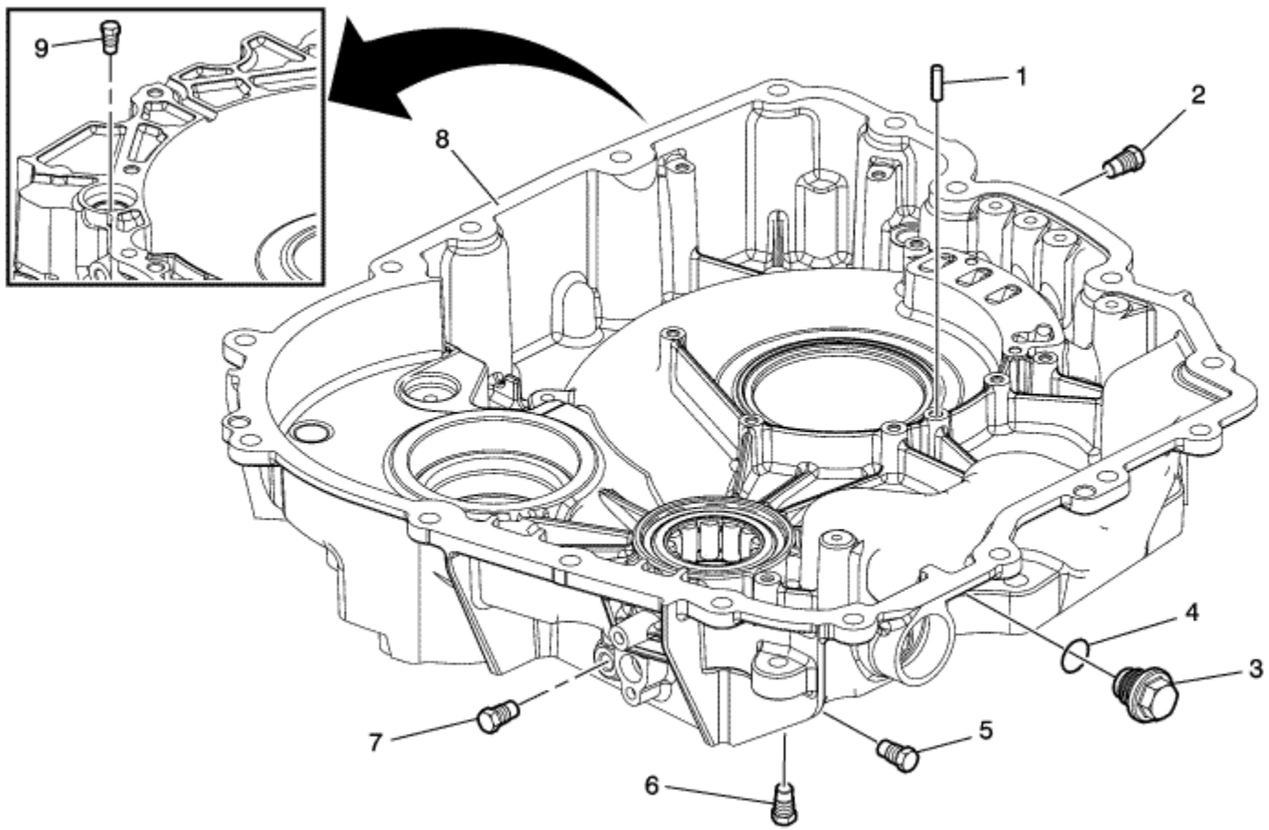

Callout	Component Name
Caution: Do not use abrasive pads or bristle devices to clean the sealing surfaces. Abrasive pads produce a fine grit that can effect transmission function. Abrasive pads can also remove enough metal to create oil leaks. **Caution:** After cleaning the transmission components, allow to air dry. Do not use cloth or paper towels in order to dry any transmission components. Lint from the towels can cause component failure.	

Caution: Do not reuse cleaning solvents. Previously used solvents may deposit sediment which may damage the component.

Preliminary Procedures

1. Thoroughly clean the torque damper and differential housing, including case threads, with clean solvent.
2. Clean gasket sealing surfaces. Remove all residual gasket material.
3. Inspect all threaded holes. If necessary, repair any thread damage.

1	A/Trans Fluid Pump Locator Pin
2	Auxiliary Pump Press Plug **Caution:** Refer to Fastener Caution in the Preface section. **Tighten** 11 N·m (97.4 lb in)
3	Filler Hole Plug **Tighten** 20 N·m (14.7 lb ft)
4	Filler Hole Plug Seal **Tip** Discard seal, it is not reusable.
5	A/Trans Fluid Pressure Test Hole Plug **Tighten** 11 N·m (97.4 lb in)
6	A/Trans Fluid Level Hole Plug (Qty: 1)
7	A/Trans Fluid Passage Plug
8	Torque Damper and Differential Housing Sealing Surface
9	A/Trans Fluid Level Hole Plug **Tighten** 11 N·m (97.4 lb in)

© Copyright Chevrolet. All rights reserved

Front Wheel Drive Shaft Seal Replacement - Torque Damper Side

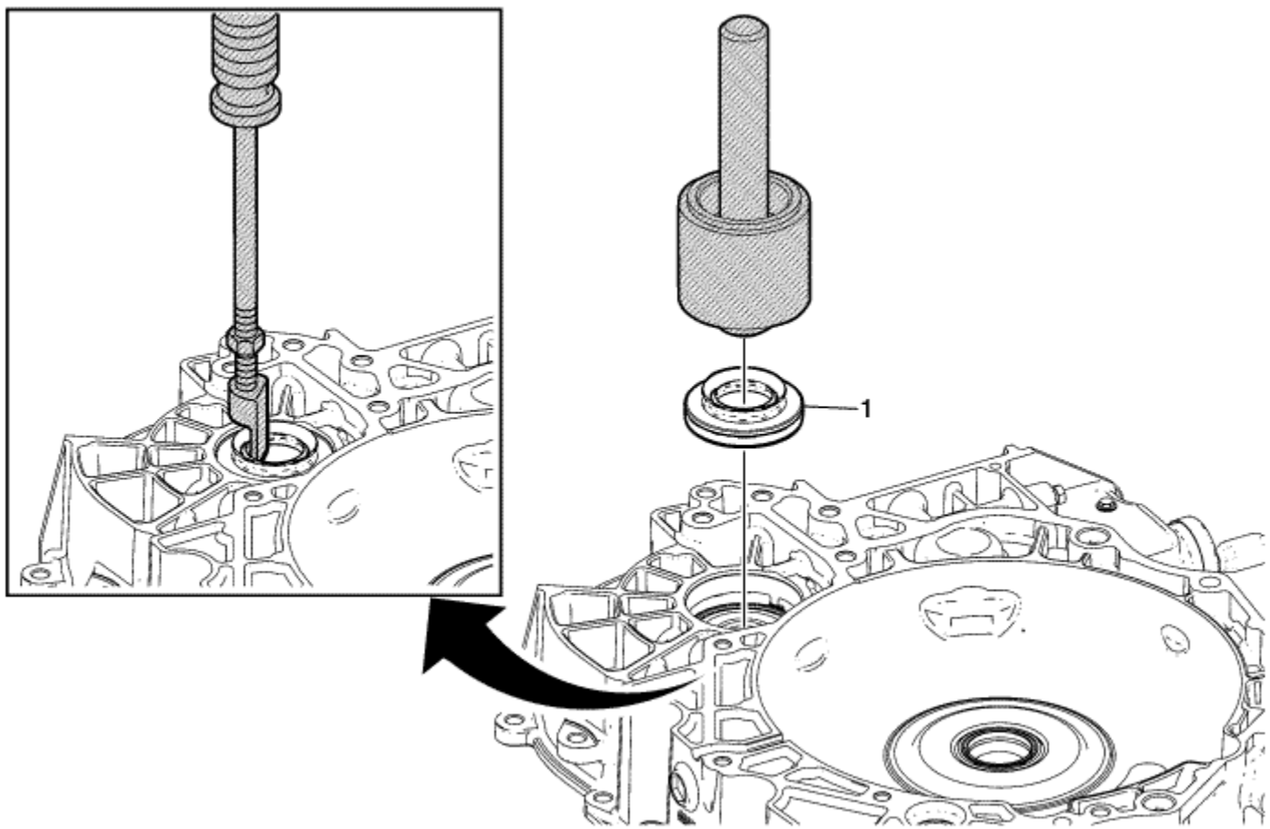

Callout	Component Name
1	Front Wheel Drive Shaft Oil Seal Assembly **Special Tools** • *DT-50301* Axle Seal Installer • *GE 6125-1B* Slide Hammer With Adaptor

	• *GE 8092* Driver Handle or equivalent • *DT 23129* Universal Seal Remover For equivalent regional tools, refer to Special Tools .

&#169© Copyright Chevrolet. All rights reserved

Front Differential Drive Pinion Gear Bearing Cup Removal - Torque Damper Side

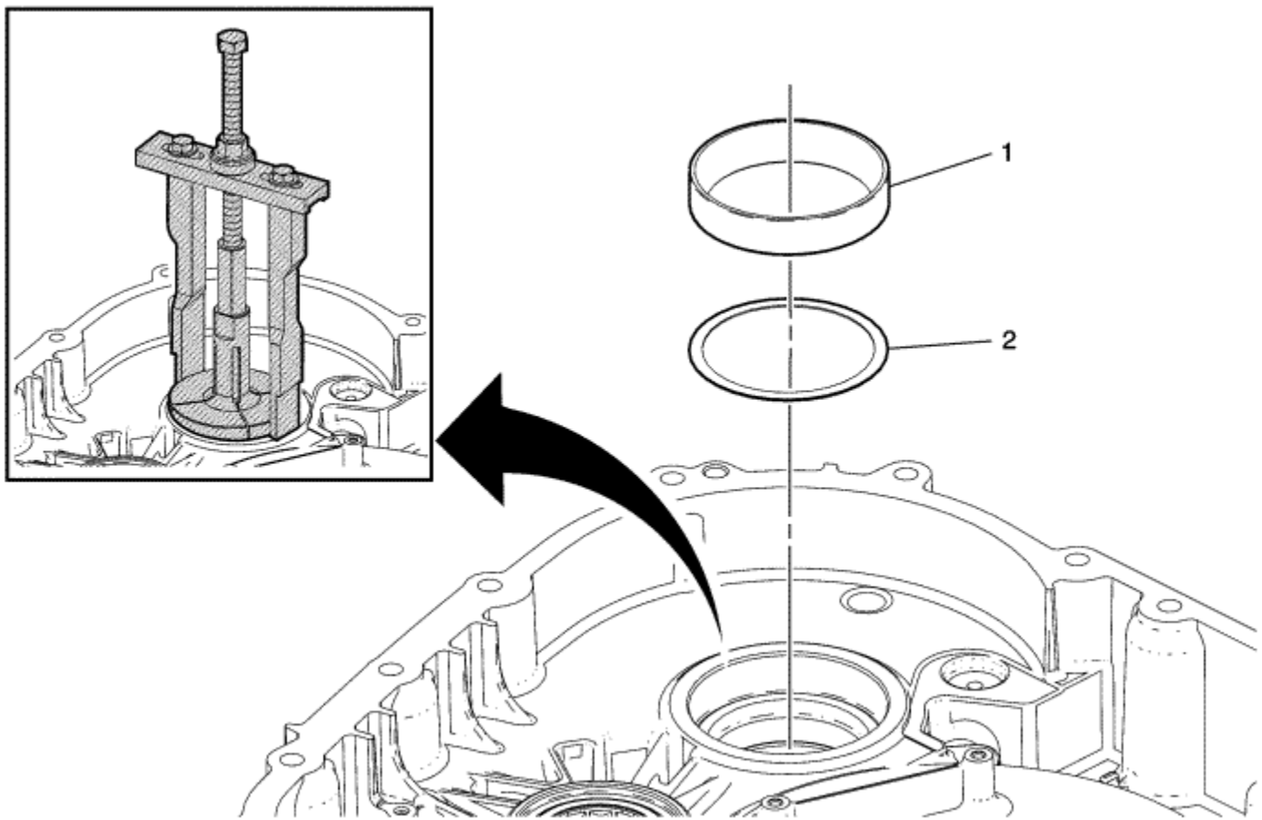

Callout	Component Name
Preliminary Procedure Do not install the bearing cup until after the selective washer measurement has been performed. Refer to Front Differential Drive Pinion Gear Bearing Thrust Washer and Front Differential Bearing Washer Measurement .	
	Front Differential Drive Pinion Gear Bearing Cup

1	**Caution:** Failure to apply the lubricant will cause damage to the bolt and nut threads. **Procedure** 1. Tighten DT 47927-2 until it fits snugly on the bearing cup. 2. Adjust DT 45124 so it sits on the torque damper housing surface just beyond the bearing cup opening. 3. Apply the extreme pressure lubricant supplied with DT 23444-A to the puller bolt threads to prevent damage to the bolt threads during bearing cup removal. 4. Hold the puller bridge bolt and turn the nut to remove the bearing cup. **Special Tools** • *DT 45124* Removal Bridge • *DT 47927-2* Bearing Cup Remover • *DT 23444-A* Extreme Press Lubricant - 1/4 Ounce Tube For equivalent regional tools, refer to Special Tools .
2	Front Differential Bearing Washer - Selective

&#169© Copyright Chevrolet. All rights reserved

Front Differential Drive Pinion Gear Roller Bearing and Lubricant Dam Removal - Torque Damper Side

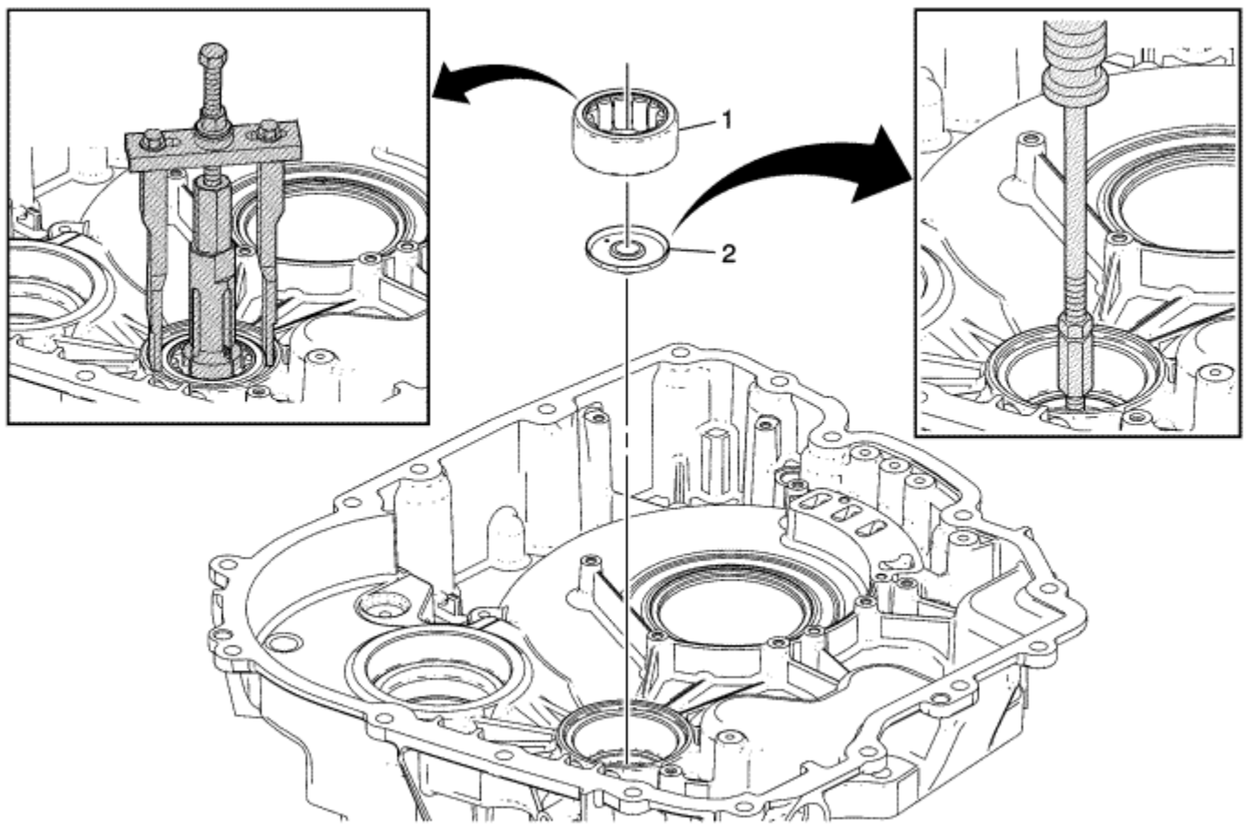

Callout	Component Name
	Front Differential Drive Pinion Gear Roller Bearing Assembly (Differential Housing) **Caution:** Failure to apply the lubricant will cause damage to the bolt and nut threads. **Procedure**

1	1. Tighten DT 49230-1 until it fits snugly on the bearing. 2. Adjust so it sits on the torque damper housing surface just beyond the bearing opening. 3. Apply the extreme pressure lubricant DT 23444-A to the puller bolt threads to prevent damage to the bolt threads during bearing removal. 4. Hold the puller bridge bolt and turn the nut to remove the bearing. **Special Tools** • *DT 45124* Removal Bridge • *DT 49230-1* Bearing Remover • *DT 23444-A* Extreme Press Lubricant - 1/4 Ounce Tube For equivalent regional tools, refer to Special Tools .
2	Front Differential Drive Pinion Gear Lubricant Dam **Procedure** Slide axle seal puller downward to penetrate lubricant dam. Turn counter clockwise to engage threads, then pull with seal puller. **Special Tools** • *DT 48055* Lubricant Dam Remover • *GE 6125-1B* Slide Hammer With Adaptor For equivalent regional tools, refer to Special Tools .

&#169© Copyright Chevrolet. All rights reserved

Auxiliary Fluid Pump Motor and Fluid Pump Disassemble

Table 1: Electric Auxiliary Pump Drive Motor Removal
Table 2: A/Trans Fluid Pump Cover Removal

Electric Auxiliary Pump Drive Motor Removal

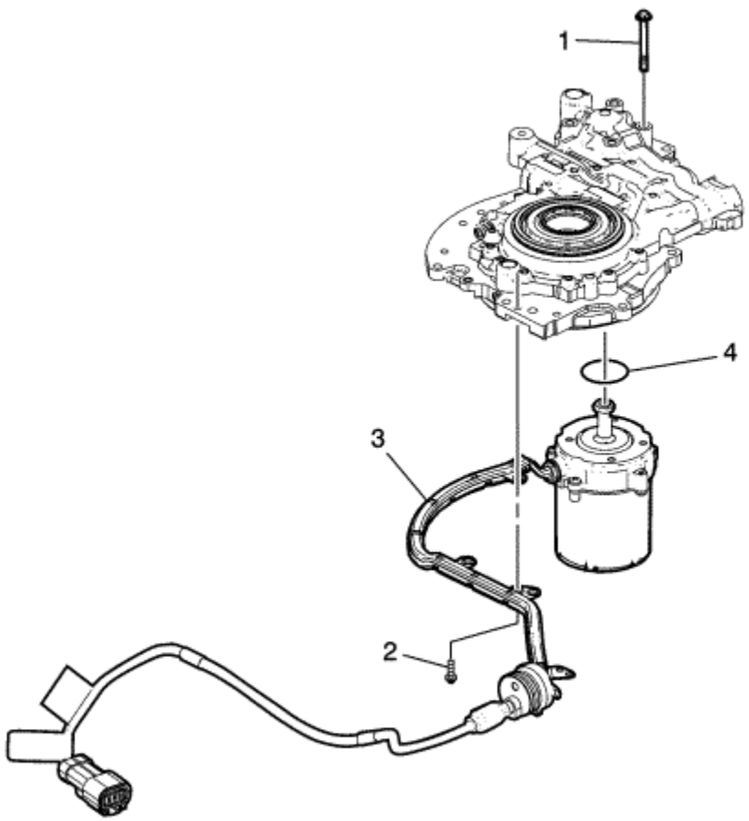

Electric Auxiliary Pump Drive Motor Removal

Callout	Component Name
1	A/Trans Auxiliary Fluid Pump Bolt M8 x 51 mm (Qty: 4)
2	A/Trans Auxiliary Fluid Pump Bolt M5 x 16 (Qty: 1)
3	Electric Auxiliary Pump Drive Motor Assembly
4	A/Trans Auxiliary Fluid Pump Motor Seal

A/Trans Fluid Pump Cover Removal

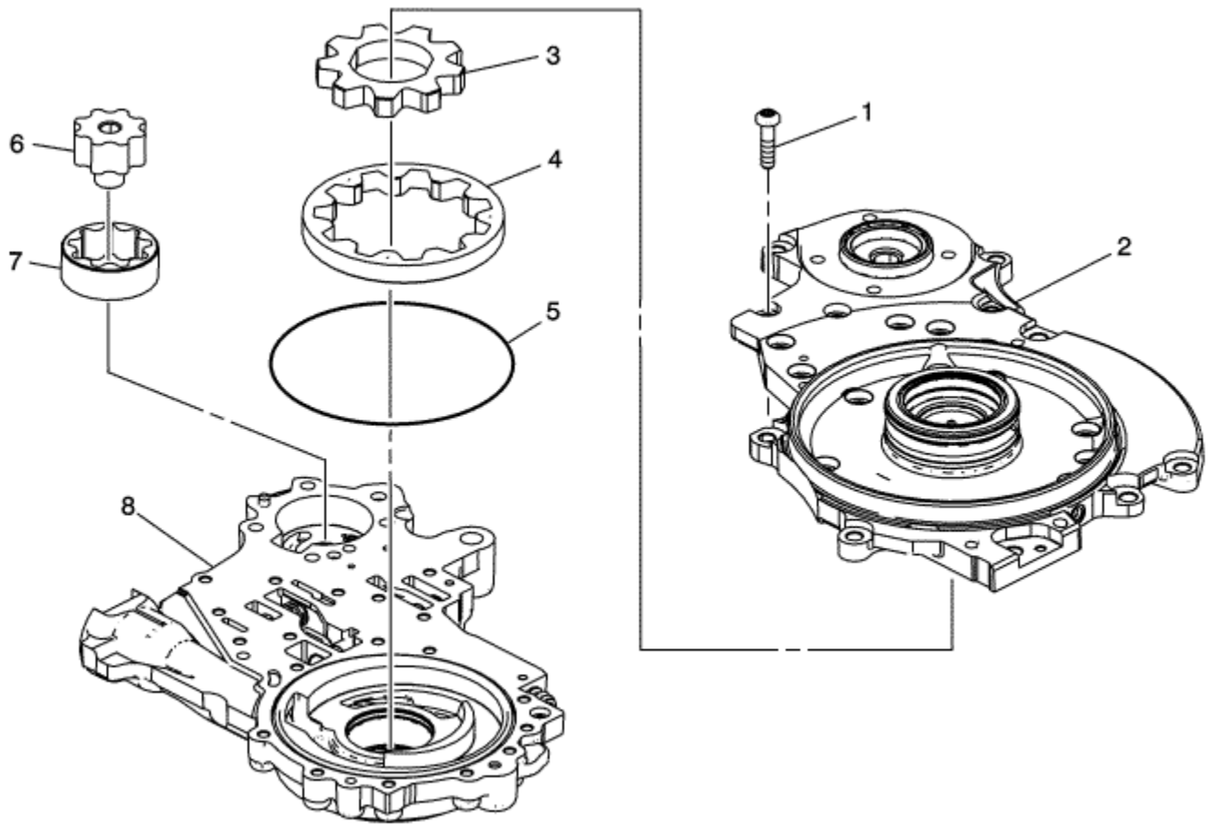

A/Trans Fluid Pump Cover Removal

Callout	Component Name
1	A/Trans Fluid Pump Cover Bolt M6 x 25 mm (Qty: 19)

2	A/Trans Fluid Pump Cover
3	A/Trans Fluid Pump Drive Gear - Selective
4	A/Trans Fluid Pump Driven Gear - Selective
5	A/Trans Fluid Pump (O-Ring) Seal
6	A/Trans Auxiliary Fluid Pump Drive Gear
7	A/Trans Auxiliary Fluid Pump Driven Gear
8	A/Trans Fluid Pump Body Assembly

© Copyright Chevrolet. All rights reserved

Input Shaft Bearing Replacement

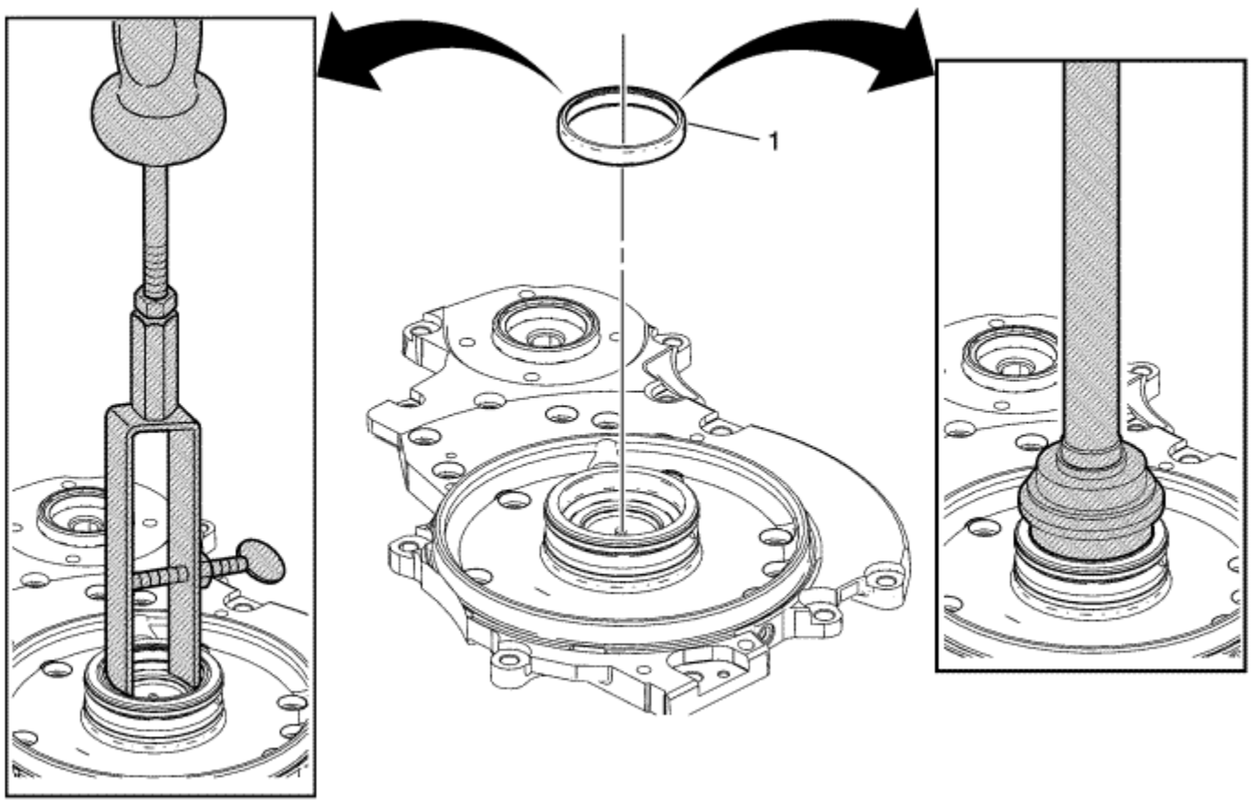

Callout	Component Name
1	Input Shaft Bearing Assembly **Special Tools** • *DT 49263* Bearing Installer • *GE 8092* Driver Handle

	• *GE 23907-1* Slide Hammer and Shaft • *DT 26941* Bushing and Bearing Remover - 3-4 in For equivalent regional tools, refer to Special Tools .

&#169© Copyright Chevrolet. All rights reserved

1-3-Reverse Clutch Housing Seal Replacement

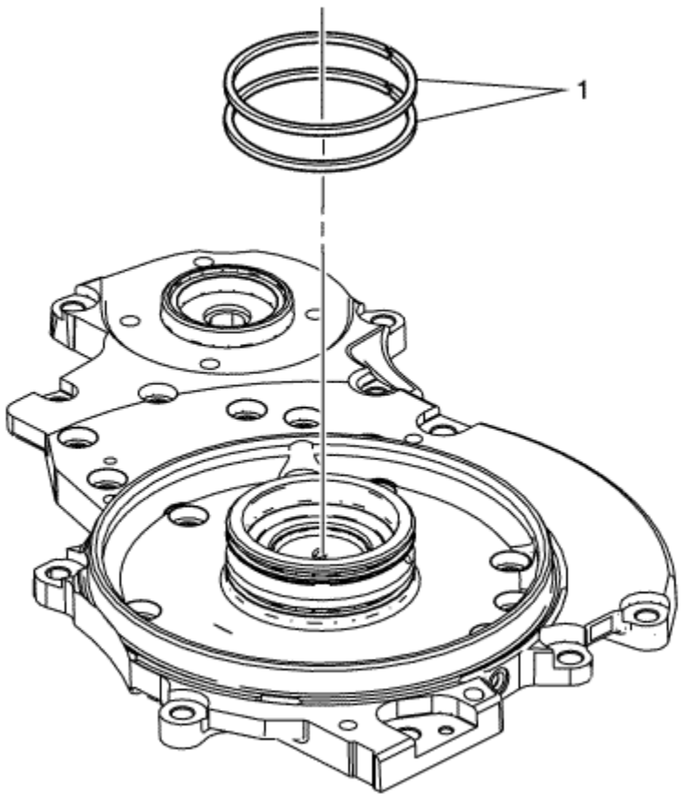

Callout	Component Name
1	1-3 Reverse Clutch Housing Seal (Qty: 2) **Tip** Discard the seals. They are not reusable. Replace with NEW seals.

© Copyright Chevrolet. All rights reserved

Fluid Pump Body, Torque Damper Fluid Seal, and Torque Damper Bearing Disassemble

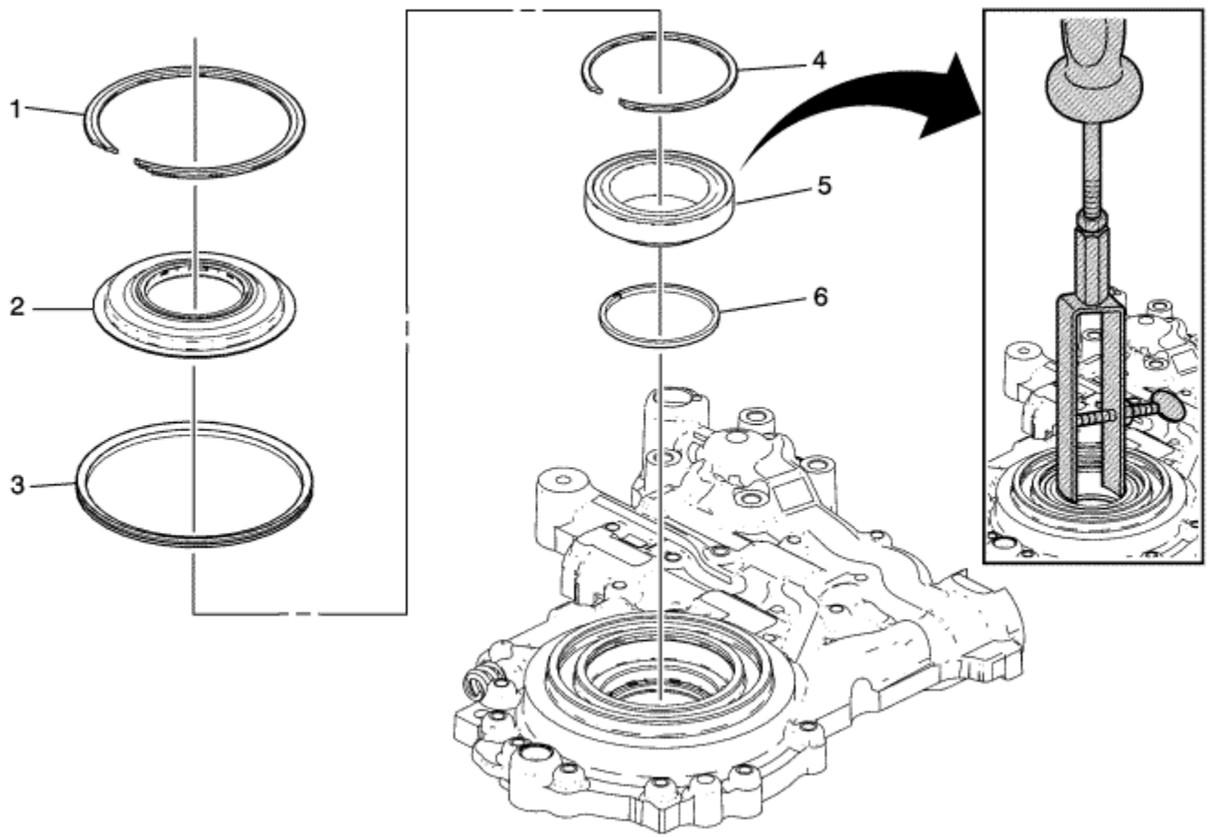

Callout	Component Name
1	A/Trans Torque Damper Seal Retaining Ring
2	A/Trans Torque Damper Fluid Seal Assembly
3	A/Trans Fluid Pump Seal
4	A/Trans Torque Damper Bearing Retaining Ring
	A/Trans Torque Damper Bearing Assembly

5	**Special Tools** • *DT 26941* Bushing and Bearing Remover 2-3 in • *GE 23907-1* Slide Hammer and Shaft For equivalent regional tools, refer to Special Tools .
6	A/Trans Torque Damper Bearing Seal

&#169© Copyright Chevrolet. All rights reserved

Fluid Pump Body Cleaning and Inspection

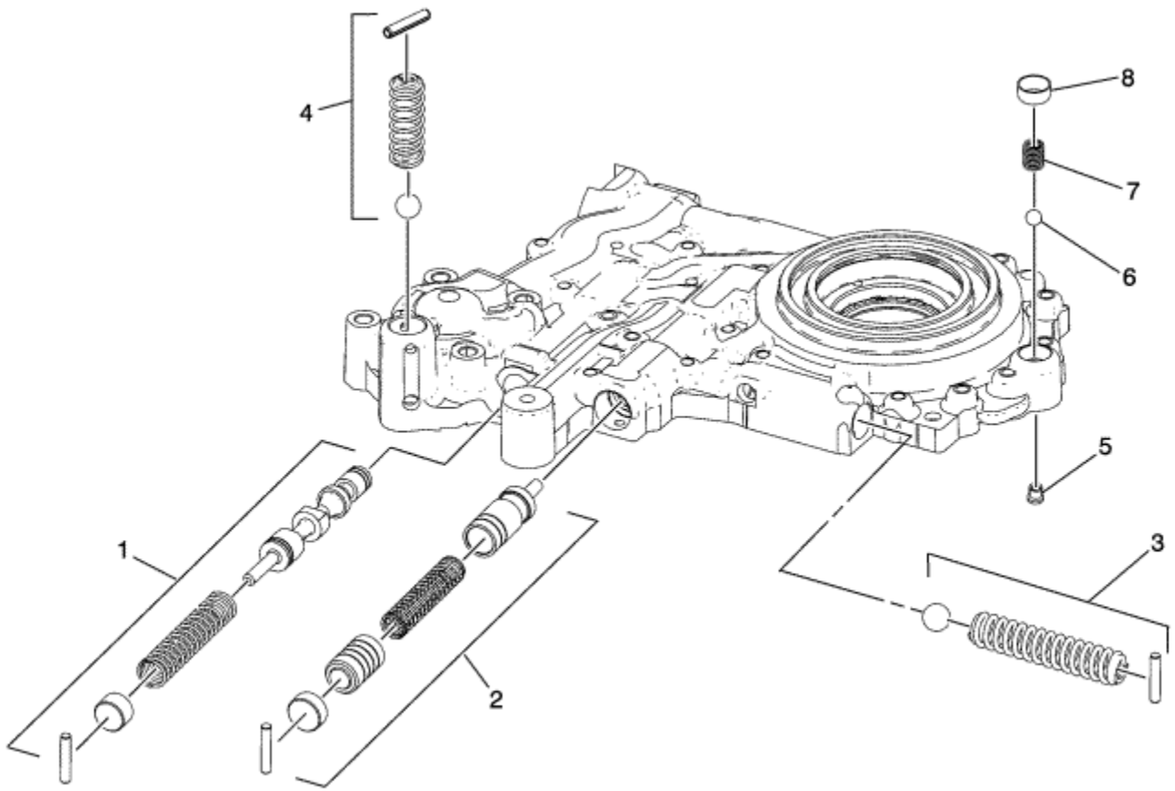

Callout	Component Name
1	Pressure Regulator Valve Body Plug
2	A/Trans Fluid Pump Cut-off Valve
3	Pressure Relief Ball Valve - Main Pump
4	Pressure Relief Ball Valve Spring
5	Cup Plug
6	Control Valve Body Ball Check Valve

7	Control Valve Body Ball Check Valve Spring
8	A/Trans Torque Damper Pressure Regulator Valve Bore Plug

© Copyright Chevrolet. All rights reserved

Fluid Pump Body, Torque Damper Fluid Seal, and Torque Damper Bearing Assemble

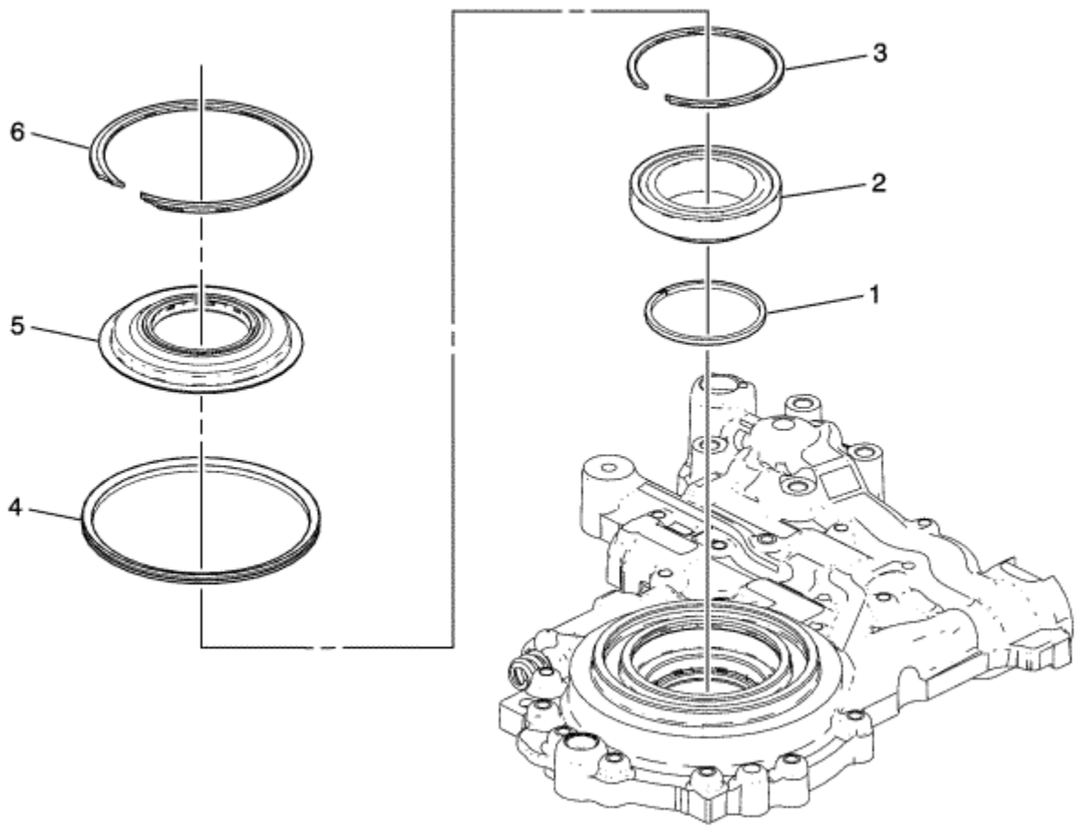

Callout	Component Name
1	A/Trans Torque Damper Bearing Seal
2	A/Trans Torque Damper Bearing Assembly
3	A/Trans Torque Damper Bearing Retaining Ring
4	A/Trans Fluid Pump Seal
5	A/Trans Torque Damper Fluid Seal Assembly

6	A/Trans Torque Damper Seal Retaining Ring

© Copyright Chevrolet. All rights reserved

Fluid Pump Selective Measurement

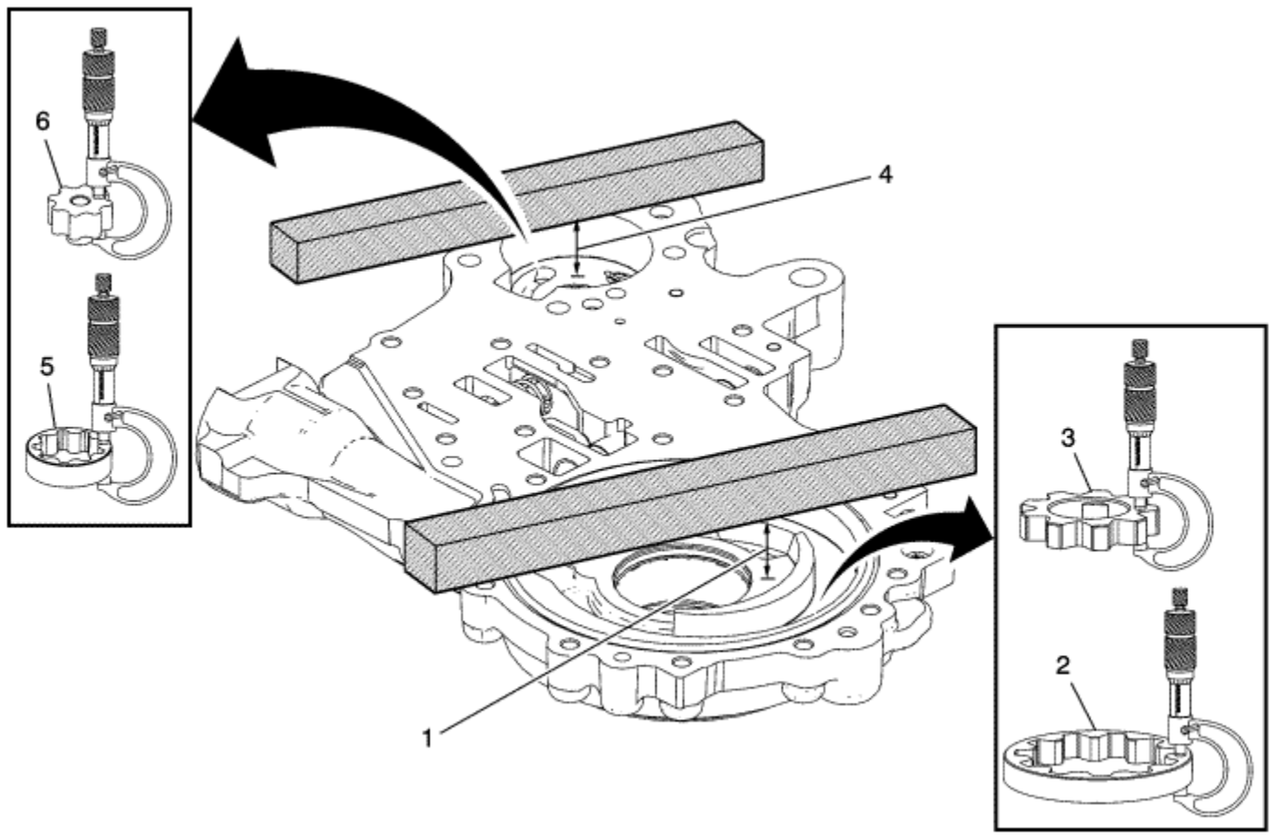

Callout	Component Name
1	A/Trans Fluid Pump Body **Tip** Measure the distance from the bottom of the gauge bar to the bottom of the main pump rotor cavity. Refer to Fluid Pump Selective Specifications . **Special Tool**

	GE 34673 Flat Gauge Bar or equivalent For equivalent regional tools, refer to Special Tools .
2	A/Trans Fluid Pump Driven Gear - Selective **Tip** Refer to Fluid Pump Selective Specifications to select the correct gear.
3	A/Trans Fluid Pump Drive Gear - Selective **Tip** Refer to Fluid Pump Selective Specifications to select the correct gear.
4	A/Trans Fluid Pump Body **Tip** Measure the distance from the bottom of the gauge bar to the bottom of the auxiliary pump rotor cavity. Refer to Fluid Pump Selective Specifications . **Special Tool** *GE 34673* Flat Gauge Bar or equivalent For equivalent regional tools, refer to Special Tools .
5	A/Trans Auxiliary Fluid Pump Driven Gear - Selective
6	A/Trans Auxiliary Fluid Pump Drive Gear - Selective

© Copyright Chevrolet. All rights reserved

Auxiliary Fluid Pump Motor and Fluid Pump Assemble

Table 1: A/Trans Fluid Pump Cover Assemble
Table 2: Electric Auxiliary Pump Drive Motor Assemble

A/Trans Fluid Pump Cover Assemble

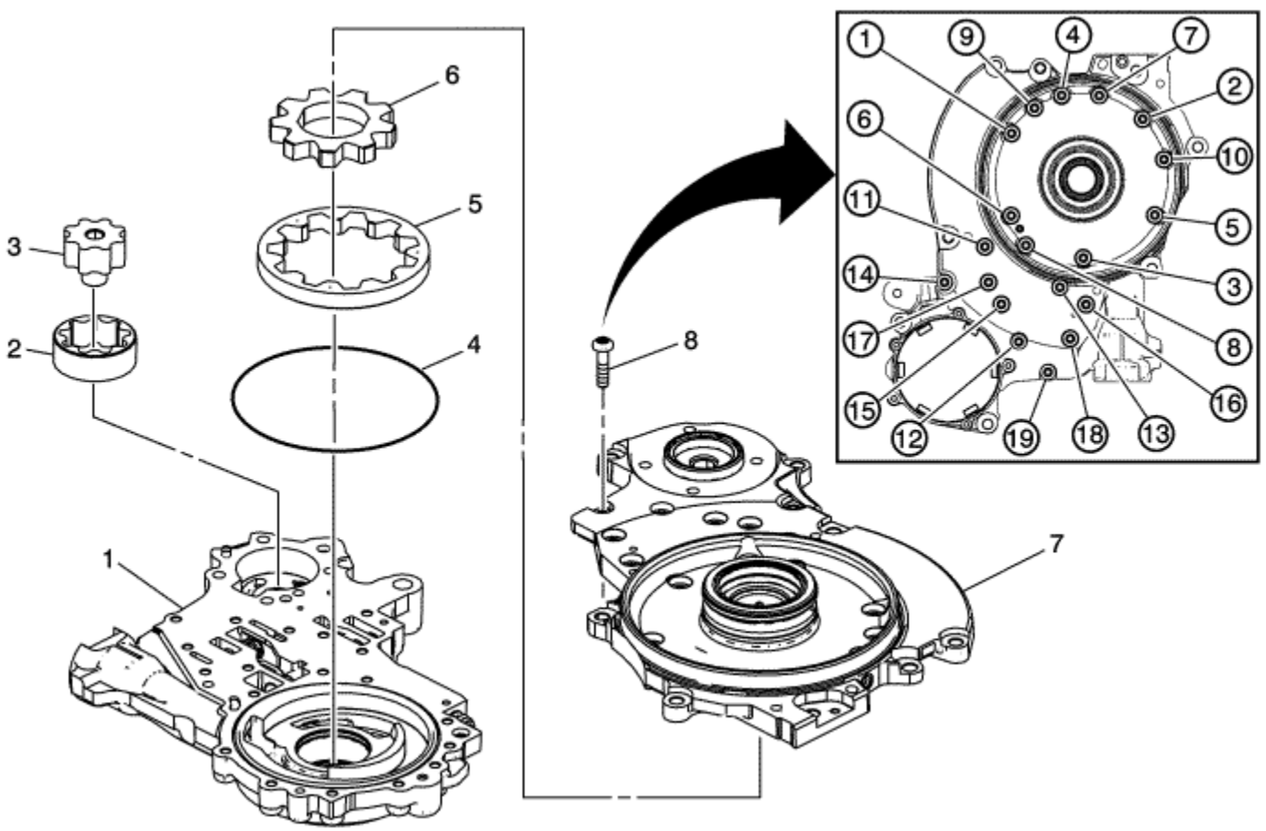

A/Trans Fluid Pump Cover Assemble

Callout	Component Name
Preliminary Procedure Before assembly of the pump cover, measure the gears for wear. Refer to Fluid Pump Selective Specifications .	
1	A/Trans Fluid Pump Body Assembly
2	A/Trans Auxiliary Fluid Pump Driven Gear - Selective
3	A/Trans Auxiliary Fluid Pump Drive Gear - Selective
4	A/Trans Fluid Pump (O-Ring) Seal
5	A/Trans Fluid Pump Driven Gear - Selective
6	A/Trans Fluid Pump Drive Gear - Selective
7	A/Trans Fluid Pump Cover
8	A/Trans Fluid Pump Cover Bolt M6 x 25 mm (Qty: 19) **Caution:** Refer to Fastener Caution in the Preface section. **Procedure** Tighten in sequence shown. **Tighten** 9 N·m (80 lb in)

Electric Auxiliary Pump Drive Motor Assemble

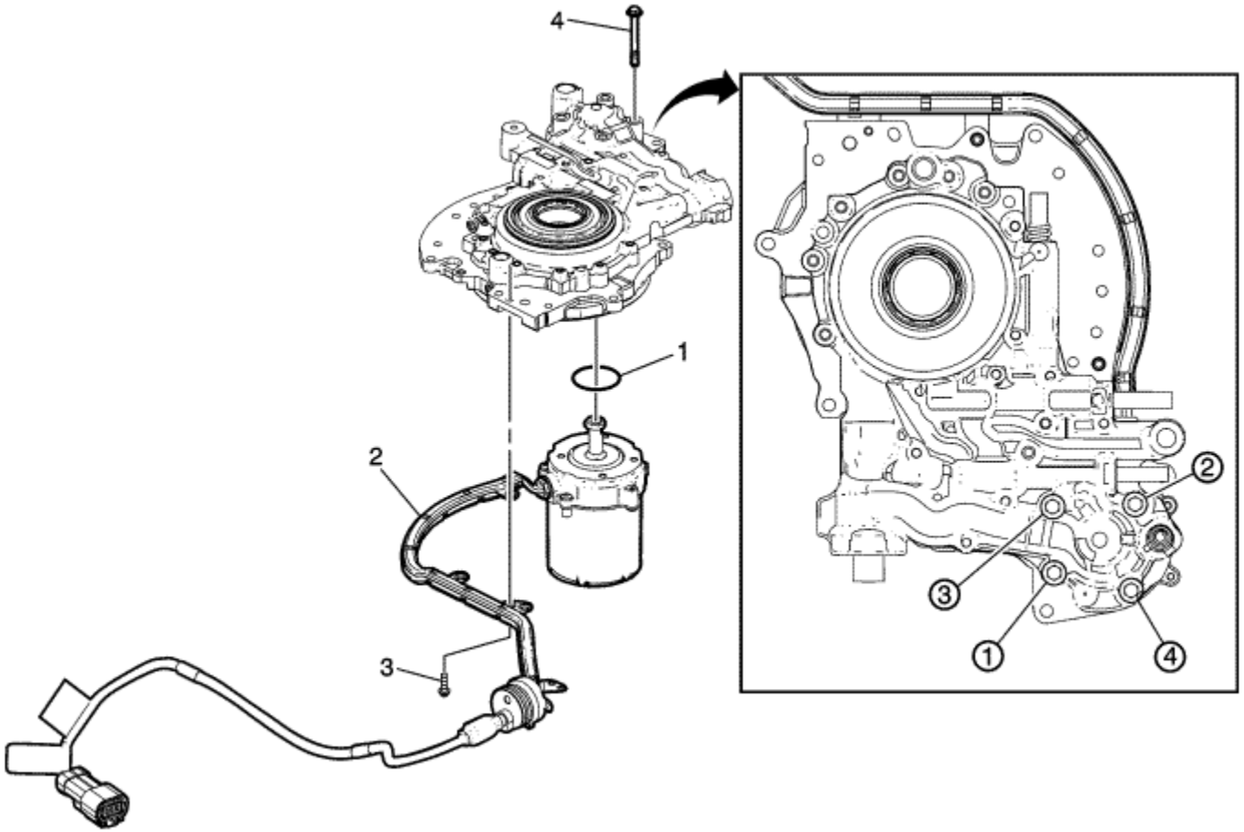

Electric Auxiliary Pump Drive Motor Assemble

Callout	Component Name
1	A/Trans Auxiliary Fluid Pump Motor Seal
2	Electric Auxiliary Pump Drive Motor Assembly
3	A/Trans Auxiliary Fluid Pump Bolt M5 x 16 (Qty: 1) **Tighten** 4 N·m (35.4 lb in)
4	A/Trans Auxiliary Fluid Pump Bolt M8 x 51 mm (Qty: 4) **Procedure** Tighten the bolts in sequence shown.

	Tighten 9 N·m (80 lb in)

© Copyright Chevrolet. All rights reserved

Torque Damper and Differential Housing with Fluid Pump Assemble

Table 1: Front Differential Carrier Baffle Fluid Trough Assemble
Table 2: Fluid Pump Assembly Assemble

Front Differential Carrier Baffle Fluid Trough Assemble

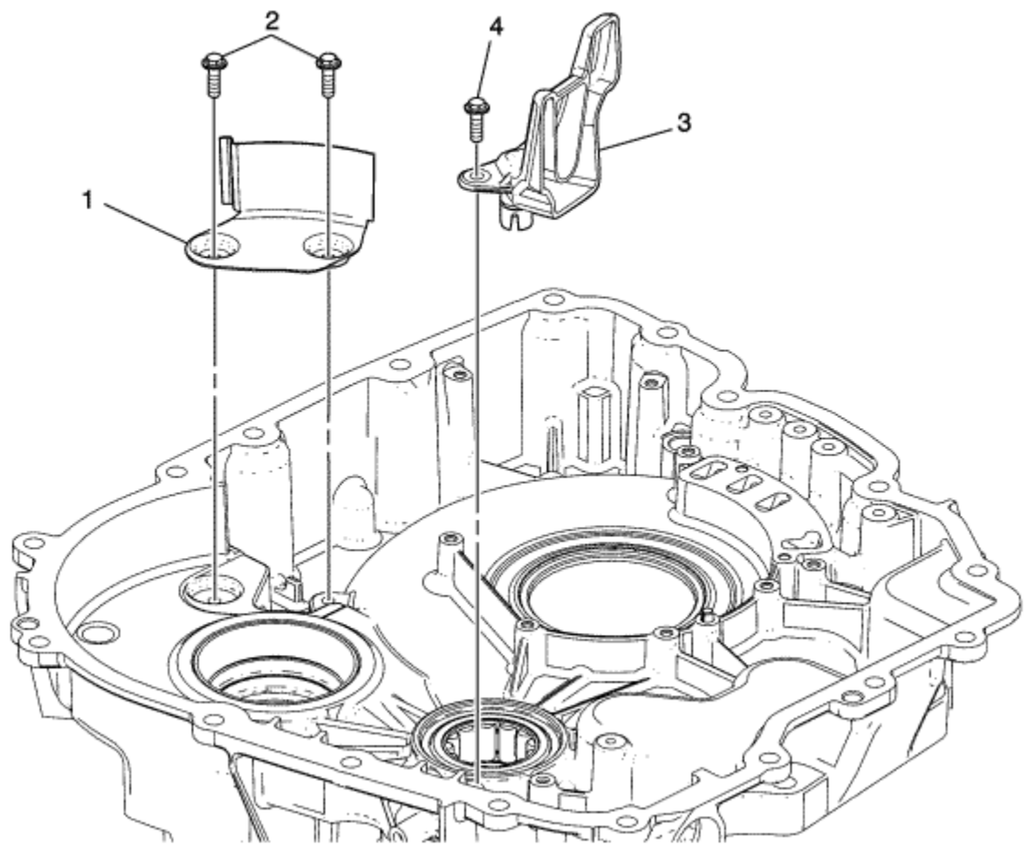

Front Differential Carrier Baffle Fluid Trough Assemble

Callout	Component Name
1	Front Differential Carrier Baffle (Housing)
2	Front Differential Carrier Baffle Bolt M6 x 20 mm (Qty: 2) **Caution:** Refer to Fastener Caution in the Preface section. **Tighten** 9 N·m (80 lb in)
3	A/Trans Fluid Trough Assembly
4	A/Trans Fluid Trough Bolt M6 x 20 mm (Qty: 2) **Tighten** 9 N·m (80 lb in)

Fluid Pump Assembly Assemble

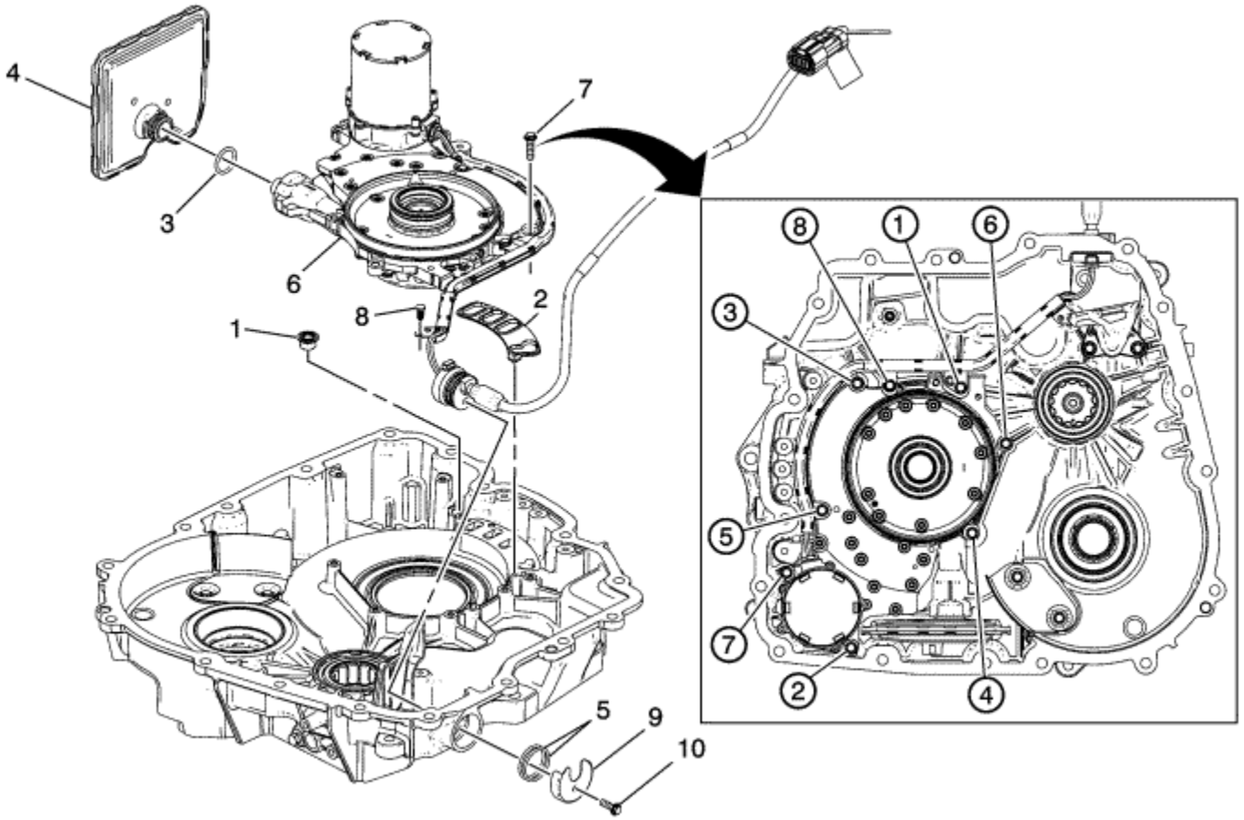

Fluid Pump Assembly Assemble

Callout	Component Name
1	A/Trans Pump Fluid Outlet Seal Assembly
2	A/Trans Fluid Pump Seal Assembly
3	A/Trans Fluid Filter Seal **Tip** Install a NEW seal. It is not reusable.
4	A/Trans Fluid Filter
5	O-Ring Seal **Tip** Install a NEW seal. They are not reusable.

6	A/Trans Fluid Pump Assembly
7	A/Trans Fluid Pump Bolt M6 x 25 mm (Qty: 8) **Procedure** Tighten in sequence shown. **Tighten** 9 N·m (80 lb in)
8	A/Trans Auxiliary Fluid Pump Motor (3 Phase) Cable Retainer M6 x 20 mm (Qty: 1) **Tighten** 9 N·m (80 lb in)
9	Auxiliary Fluid Motor Retainer
10	Auxiliary Fluid Motor Retainer Bolt M6 x 20 mm (Qty: 1) **Tighten** 9 N·m (80 lb in)

© Copyright Chevrolet. All rights reserved

Drive Motor Generator Position Sensor Stator Removal

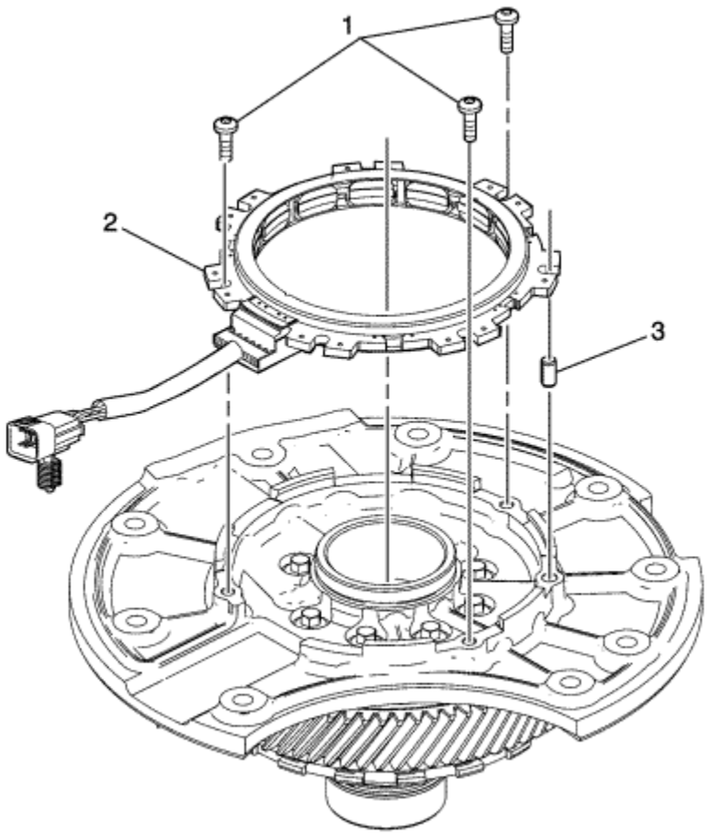

Callout	Component Name
1	Drive/Motor Generator Position Switch Sensor Bolt M5 x 16 mm (Qty: 3)
2	Generator/Drive Motor Position Sensor Stator Assembly
3	Locating Pin

© Copyright Chevrolet. All rights reserved

Centre Support Assembly Disassemble

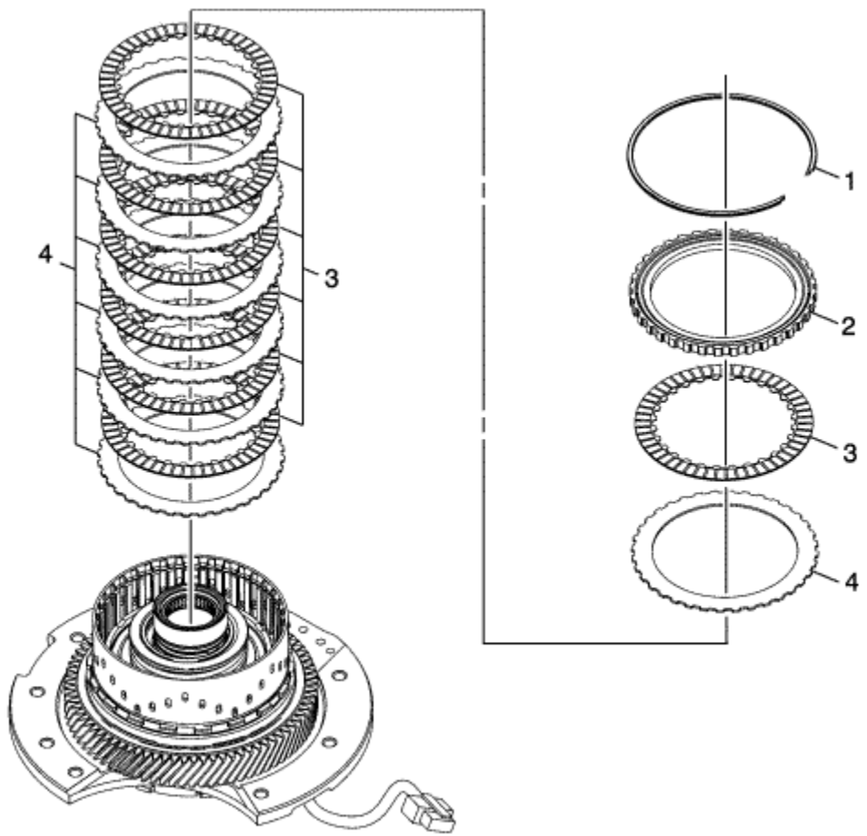

Callout	Component Name
1	Variable Low and 1-2 Reverse Clutch Backing Plate Retaining Ring - Selective **Tip** Discard this retaining ring. It is not reusable.
2	Variable Low and 1-2 Reverse Clutch Backing Plate
3	Variable Low and 1-2 Reverse Clutch Plate Assembly (Qty: 7)

4	Variable Low and 1-2 Reverse Clutch Plate (Qty: 7)

© Copyright Chevrolet. All rights reserved

Variable Low and 1-2 Reverse Clutch Piston Removal

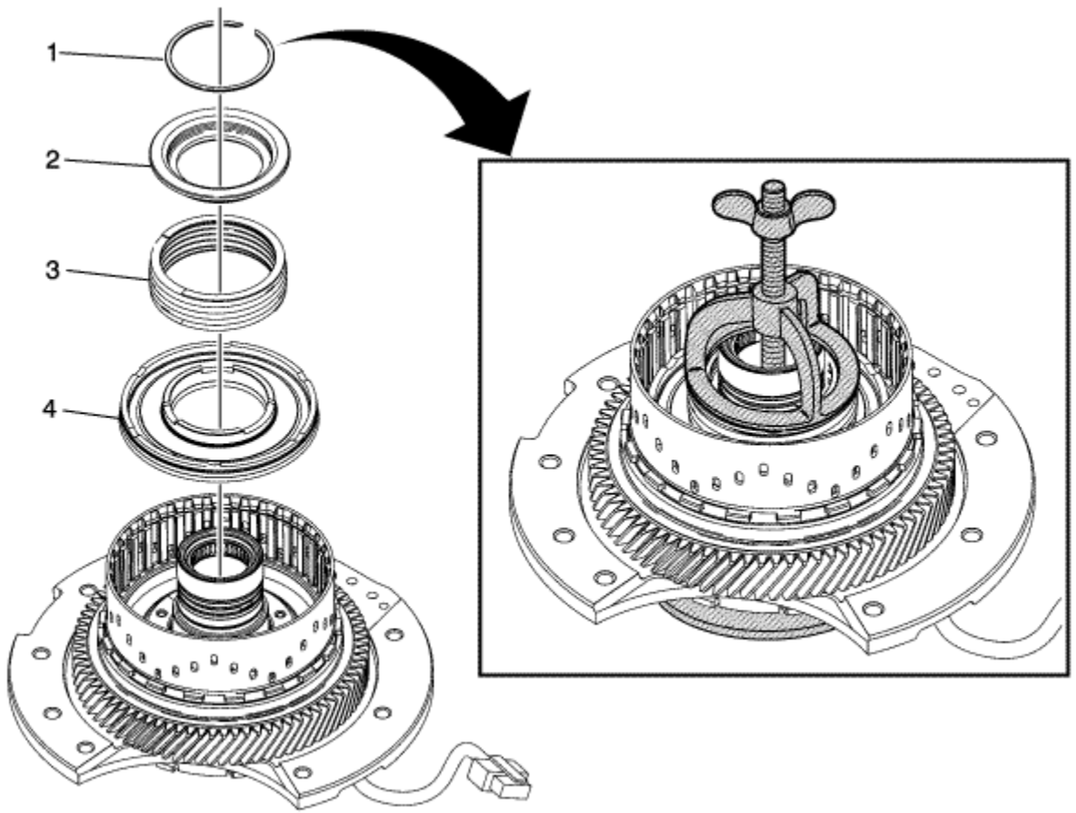

Callout	Component Name
1	Variable Low and 1-2 Reverse Clutch Spring Retaining Washer Retaining Ring **Tip** 1. Use DT 21420-2, DT 23327-1 and DT 23327-2 which is part of DT 23327 to compress the Variable Low and 1-2 Reverse Clutch Piston Assembly. 2. Discard this retaining ring. It is not reusable.

	Special Tools *DT 23327* Clutch Spring Compressor For equivalent regional tools, refer to Special Tools .
2	Variable Low and 1-2 Reverse Clutch Spring Retainer
3	Variable Low and 1-2 Reverse Clutch Spring
4	Variable Low and 1-2 Reverse Clutch Piston Assembly

© Copyright Chevrolet. All rights reserved

Variable Low and 1-2 Reverse Clutch Housing and Front Differential Transfer Drive Gear Disassemble

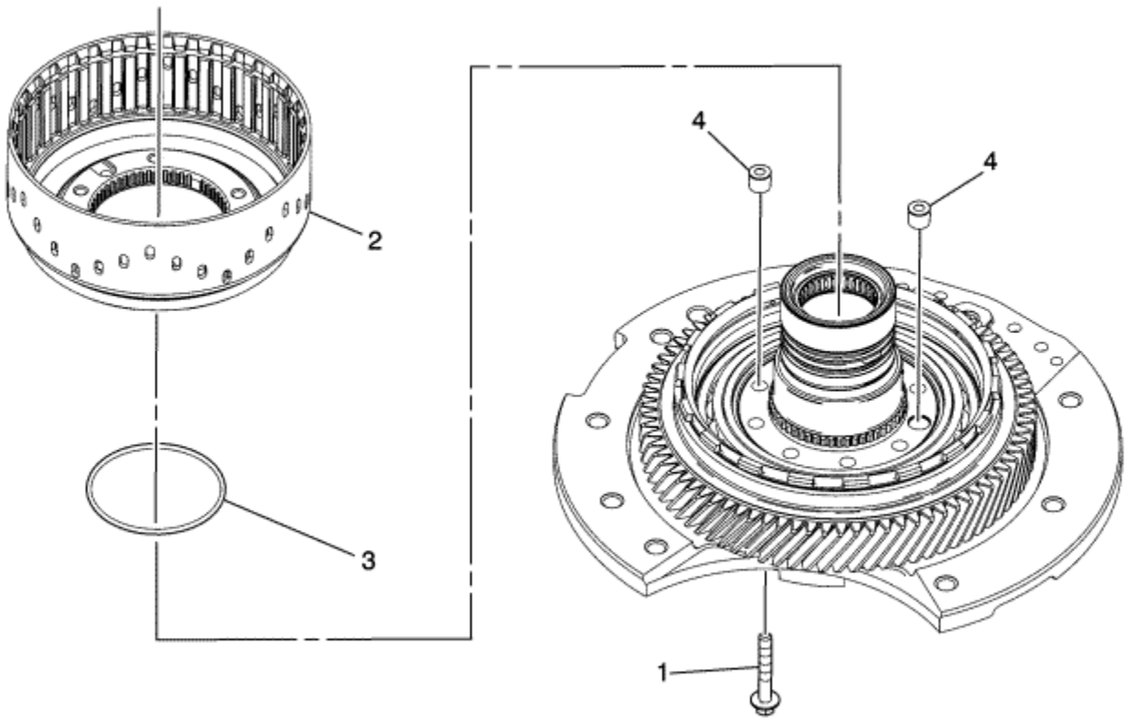

Callout	Component Name
1	Variable Low and 1-2 Reverse Clutch Housing Bolt M6 x 39.5 mm (Qty: 7)
2	Variable Low and 1-2 Reverse Clutch Housing Assembly
3	Variable Low and 1-2 Reverse Clutch Housing (O-ring) Seal
4	Variable Low and 1-2 Reverse Clutch Housing Fluid Passage Seal (Qty: 2)

© Copyright Chevrolet. All rights reserved

Input Sun Gear Thrust Bearing Replacement

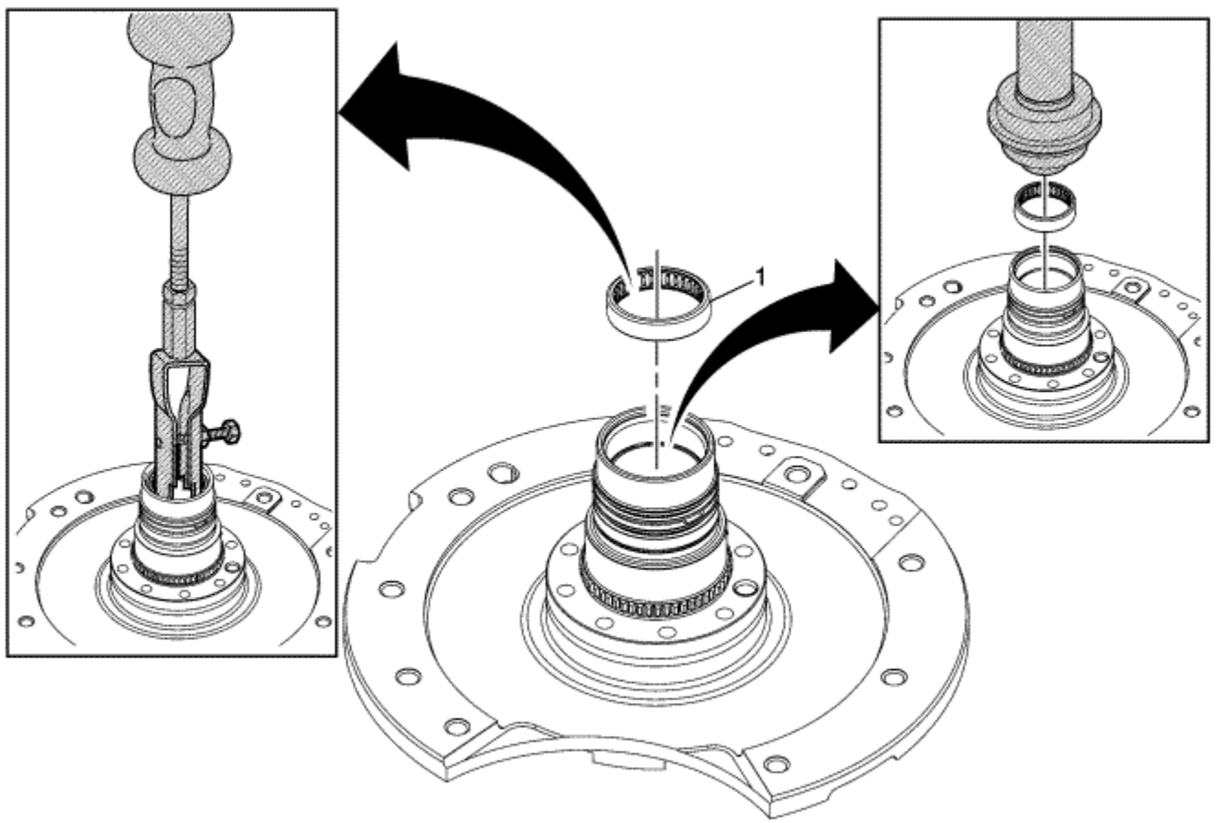

Callout	Component Name
1	Input Sun Gear Shaft Roller Bearing Assembly **Special Tools** • *DT-49263* Bearing Installer • *GE 8092* Driver Handle

	• *DT 29369-2* Bushing and Bearing Remover 2-3 in • *GE 23907-1* Slide Hammer and Shaft For equivalent regional tools, refer to Special Tools .

&#169© Copyright Chevrolet. All rights reserved

Variable High and 2-3-4 Clutch Seal Installation

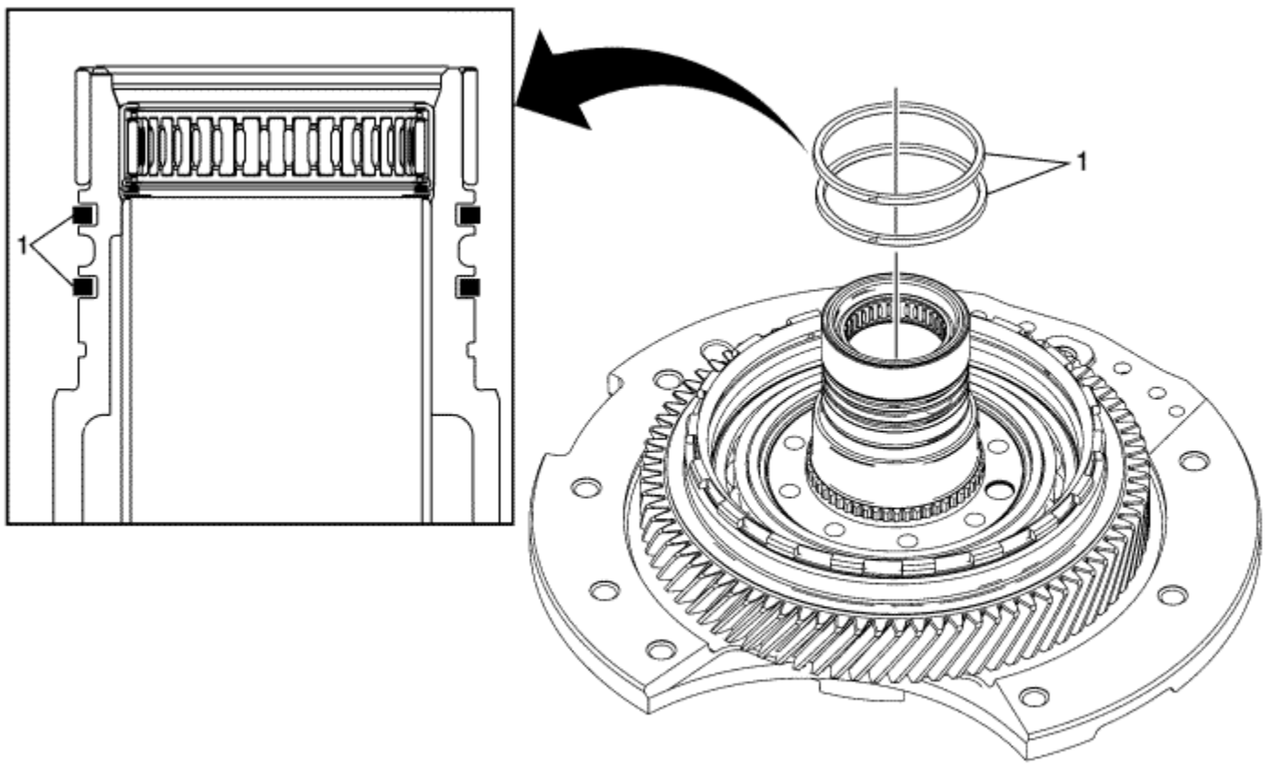

Callout	Component Name
1	Variable Hi and 2-3-4 Clutch Seal **Tip** A NEW seal must be installed.

© Copyright Chevrolet. All rights reserved

Variable Low and 1-2 Reverse Clutch Housing and Front Differential Transfer Drive Gear Assemble

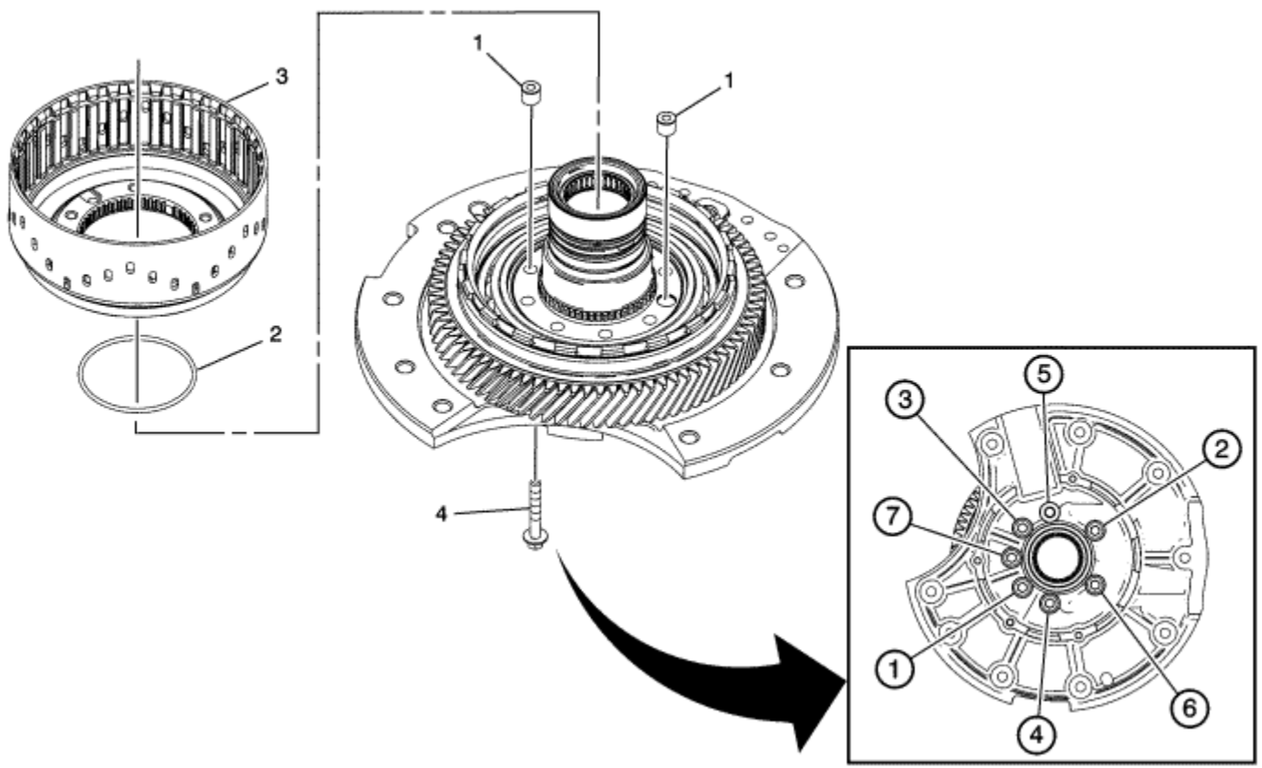

Callout	Component Name
Preliminary Procedures	

- Inspect the support assembly for damage or wear to the splines, bushings, machined surfaces and threaded holes.
- Inspect the transfer drive gear for damage or wear.
- Inspect the transfer drive gear bearing assembly for proper operation.

- The bearing should roll smoothly and quietly.

1	Variable Low and 1-2 Reverse Clutch Housing Fluid Passage Seal (Qty: 2)
2	Variable Low and 1-2 Reverse Clutch Housing (O-ring) Seal **Tip** Install a NEW seal. It is not reusable.
3	Variable Low and 1-2 Reverse Clutch Housing Assembly
4	Variable Low and 1-2 Reverse Clutch Housing Bolt M6 x 39.5 mm (Qty: 7) **Caution:** Refer to Fastener Caution in the Preface section. **Procedure** 1. Rotate centre support clockwise against clutch housing splines before tightening to specified torque. 2. Tighten the bolts in sequence shown. **Tighten** 15 N·m (11 lb ft)

&#169© Copyright Chevrolet. All rights reserved

Variable Low and 1-2 Reverse Clutch Piston Installation

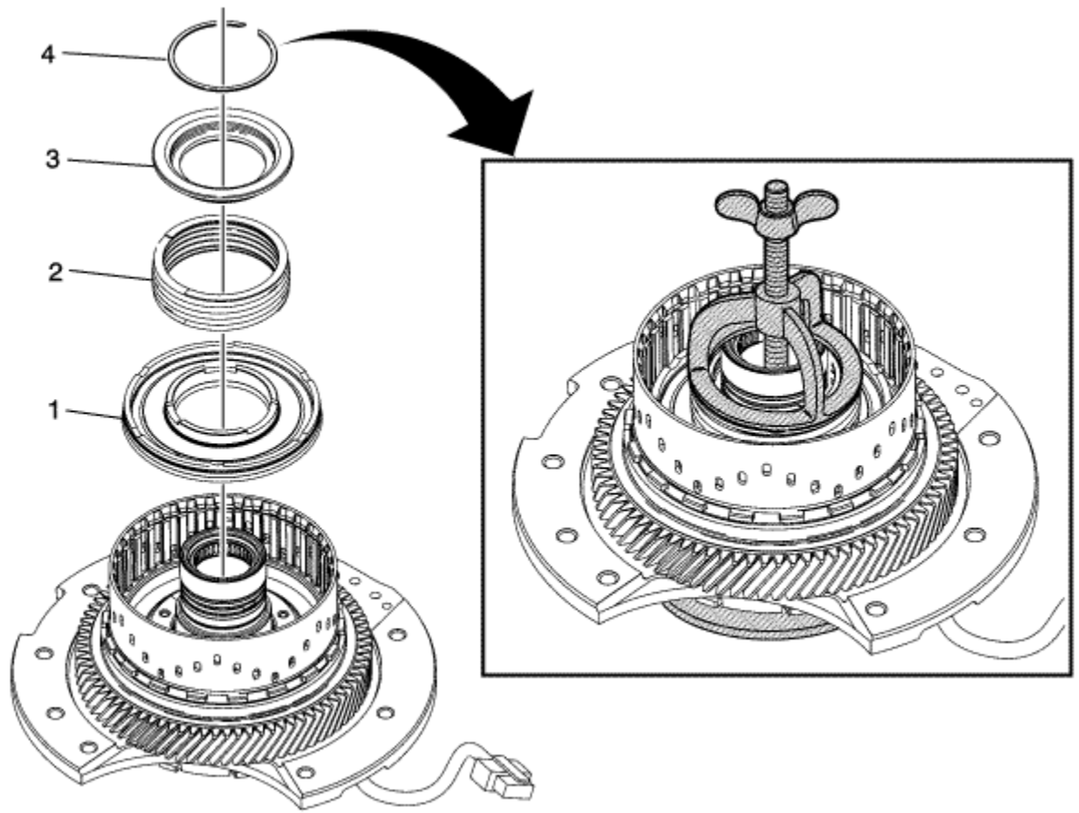

Callout	Component Name
Preliminary Procedure Clean and inspect all components for damage or wear.	
1	Variable Low and 1-2 Reverse Clutch Piston Assembly
2	Variable Low and 1-2 Reverse Clutch Spring

3	Variable Low and 1-2 Reverse Clutch Spring Retainer
4	Variable Low and 1-2 Reverse Clutch Spring Retaining Washer Retaining Ring **Tip** 1. Install a NEW retaining ring. It is not reusable. 2. Use DT 21420-2, DT 23327-1 and DT 23327-2 which is part of DT 23327 to compress the Variable Low and 1-2 Reverse Clutch Piston Assembly. **Special Tools** *DT 23327* Clutch Spring Compressor For equivalent regional tools, refer to Special Tools .

© Copyright Chevrolet. All rights reserved

Centre Support Assembly Assemble

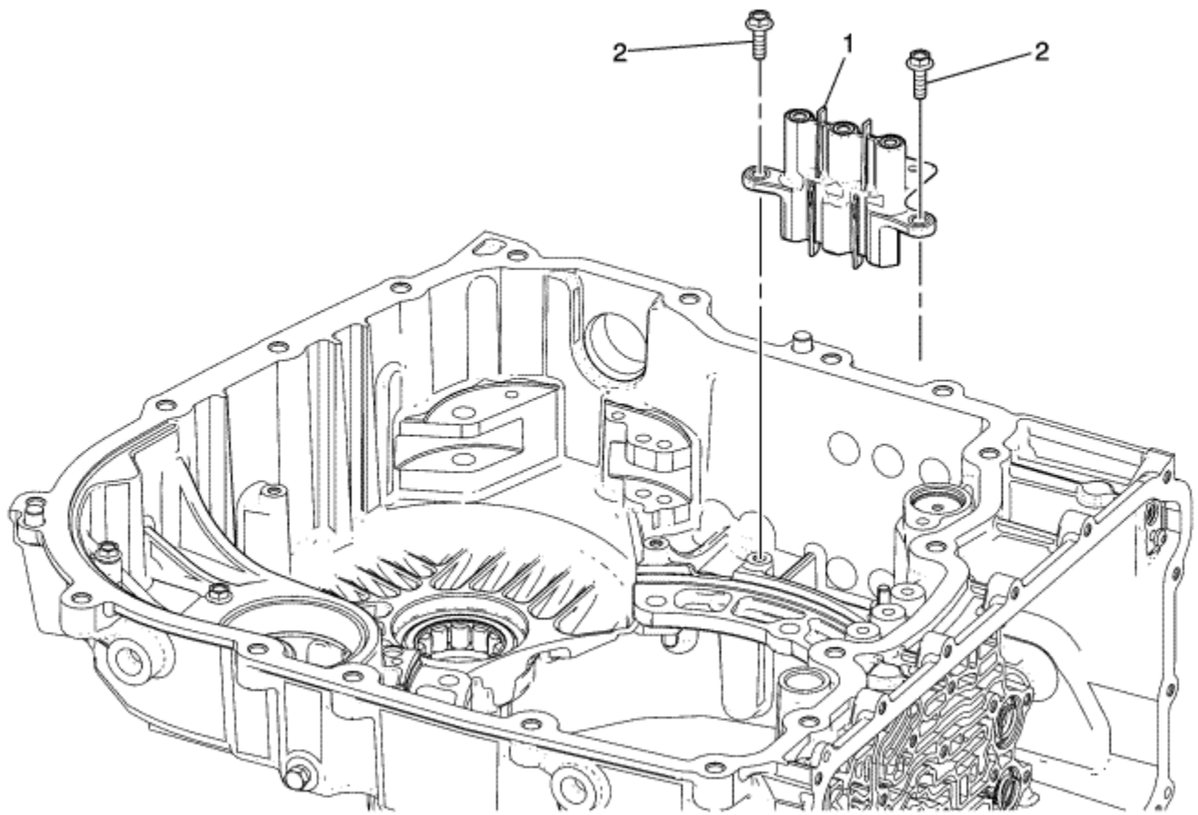

Callout	Component Name
Preliminary Procedure Clean and inspect all components for damage or wear.	
1	Variable Low and 1-2 Reverse Clutch Plate (Qty: 7)
2	Variable Low and 1-2 Reverse Clutch Plate Assembly (Qty: 7)

3	Variable Low and 1-2 Reverse Clutch Backing Plate
4	Variable Low and 1-2 Reverse Clutch Backing Plate Retaining Ring - Selective **Tip** Install a NEW retaining ring. It is not reusable.

© Copyright Chevrolet. All rights reserved

Variable Low and 1-2 Reverse Clutch Piston Air Check

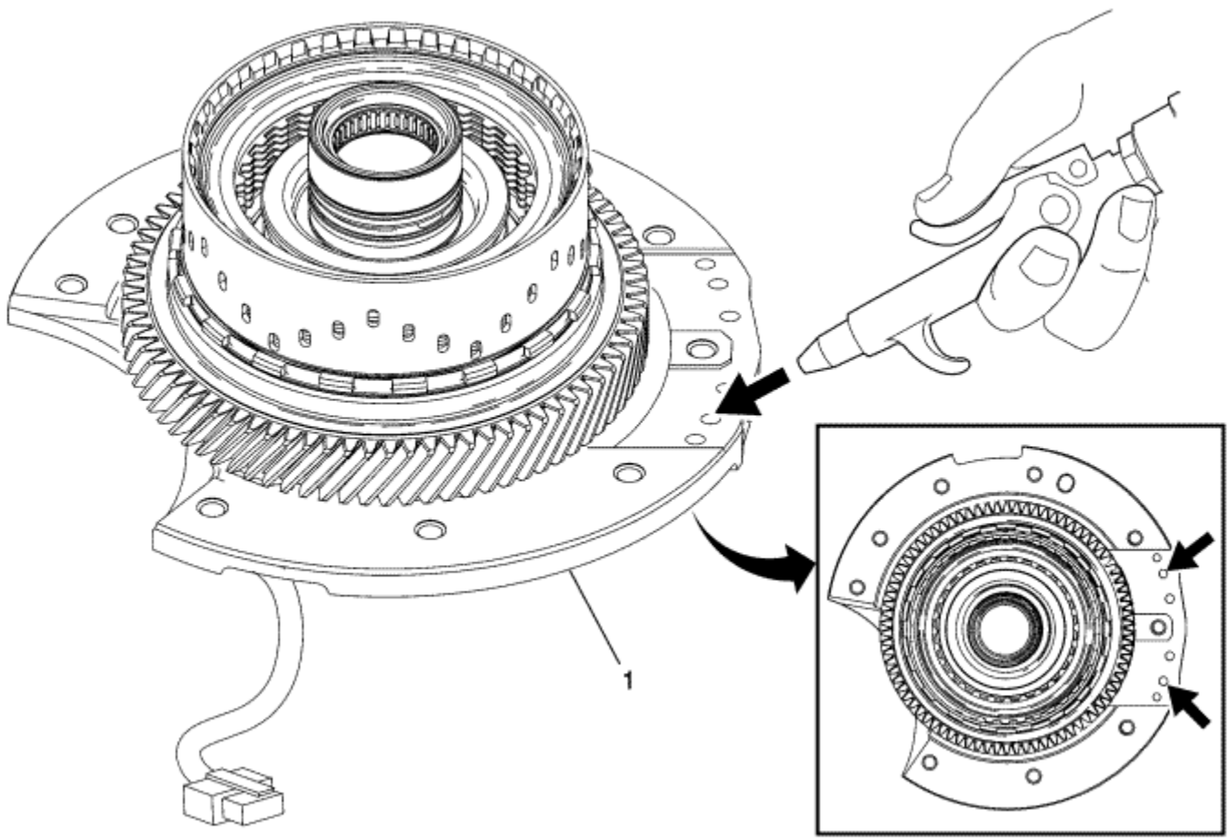

Callout	Component Name
1	Centre (w/Variable Low and 1-2 Reverse Clutch) Support Assembly **Caution:** Regulate the air pressure to 40 psi maximum. High pressure could cause the piston to over travel and damage the piston seals. **Procedure**

1. Plug one hole while applying air to the other.
2. Apply shop air to the low and 1-2 reverse clutch fluid passage. Observe the piston movement.

Tip
Minimal piston movement and excessive air leaking could indicate damage to the piston seals or improper assembly.

© Copyright Chevrolet. All rights reserved

Drive Motor Generator Position Sensor Stator Installation

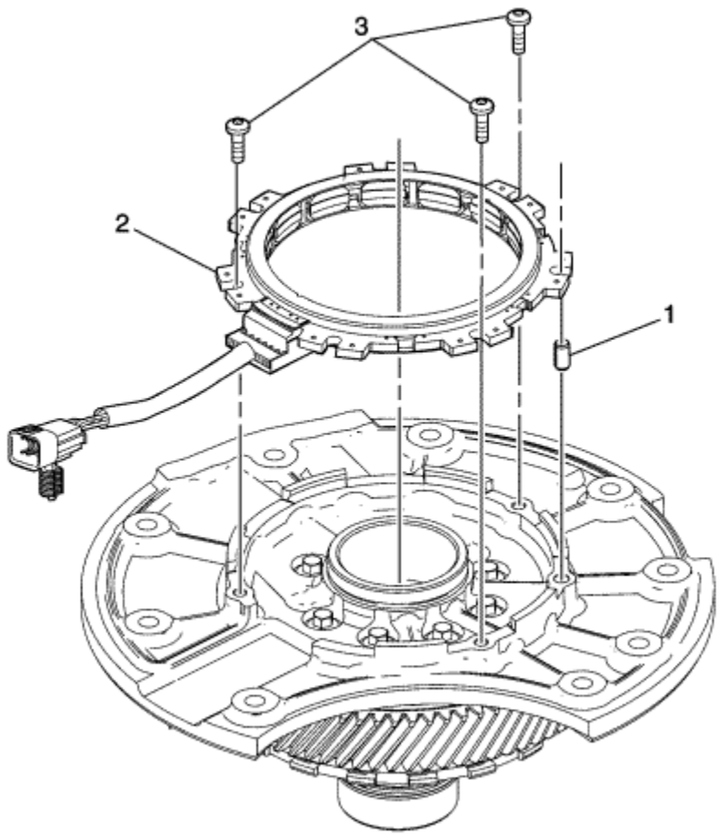

Callout	Component Name
Preliminary Procedures • Inspect the support assembly for damage or wear to the splines, bushings, machined surfaces and threaded holes. • Inspect the transfer drive gear for damage or wear. • Inspect the transfer drive gear bearing assembly for proper operation. • The bearing should roll smoothly and quietly.	

1	Locating Pin
2	Generator/Drive Motor Position Sensor Stator Assembly
3	Drive Motor Generator Position Switch Sensor Bolt M5 x 16 mm (Qty: 3) **Caution:** Refer to Fastener Caution in the Preface section. **Tighten** 7.25 N·m (64.2 lb in)

&#169© Copyright Chevrolet. All rights reserved

Variable High and 2-3-4 Clutch Disassemble

Table 1: Output Carrier Internal Gear and Variable Hi and 2-3-4 Clutch Plates Disassemble
Table 2: Variable Hi and 2-3-4 Clutch Piston Assembly and Spring Disassemble

Output Carrier Internal Gear and Variable Hi and 2-3-4 Clutch Plates Disassemble

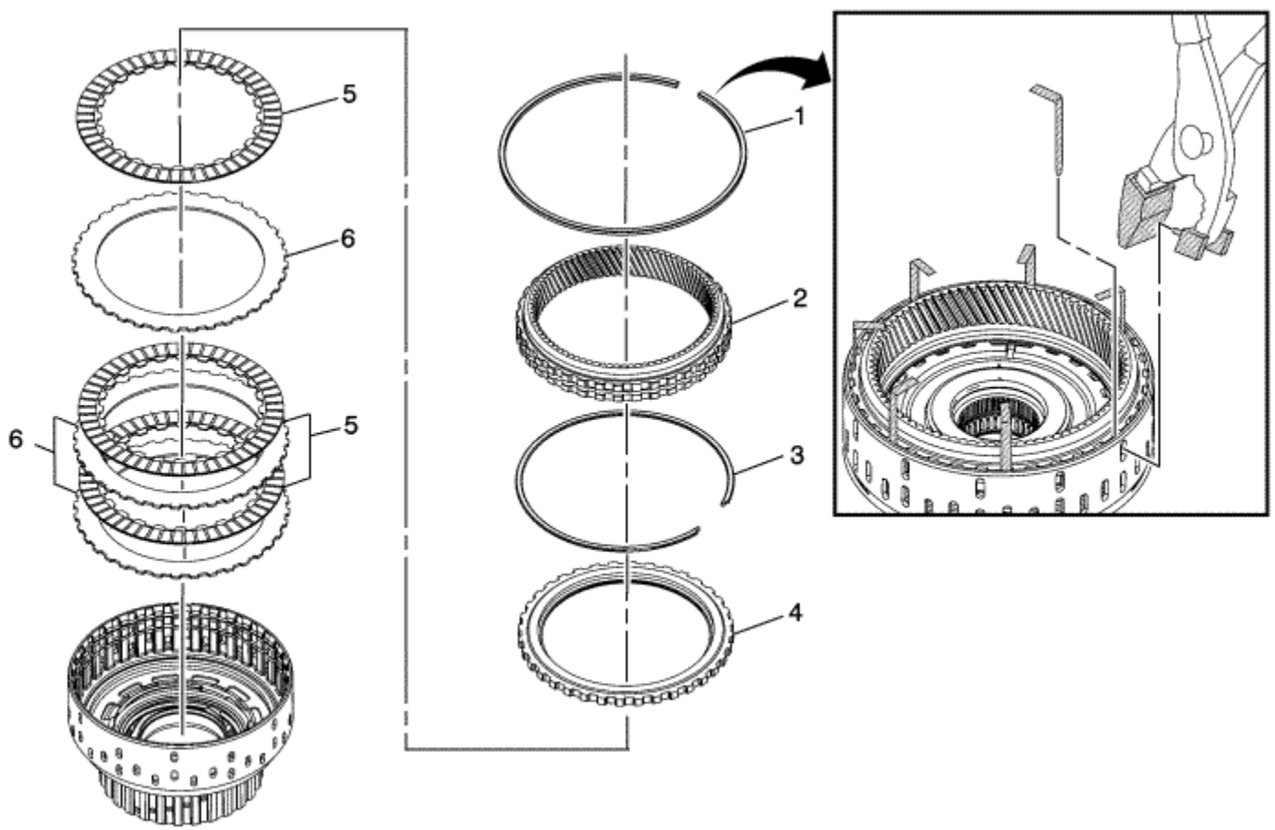

Output Carrier Internal Gear and Variable Hi and 2-3-4 Clutch Plates Disassemble

Callout	Component Name
1	Output Carrier Internal Gear Retaining Ring **Warning:** Wear safety glasses in order to avoid eye damage. **Tip** Locate retaining ring gap to start the shims insert 5 or 6 evenly spaced. **Special Tools** *DT-49098* Input and Output Clutch Pack Retaining Ring Remover For equivalent regional tools, refer to Special Tools .
2	Output Carrier Internal Gear
3	Variable Hi and 2-3-4 Clutch Backing Plate Retaining Ring - Selective **Tip** Discard the retaining ring. It is not reusable.
4	Variable Hi and 2-3-4 Clutch Backing Plate
5	Variable Hi and 2-3-4 Clutch Plate Assembly - Friction (Qty: 3)
6	Variable Hi and 2-3-4 Clutch Plate (Qty: 3)

Variable Hi and 2-3-4 Clutch Piston Assembly and Spring Disassemble

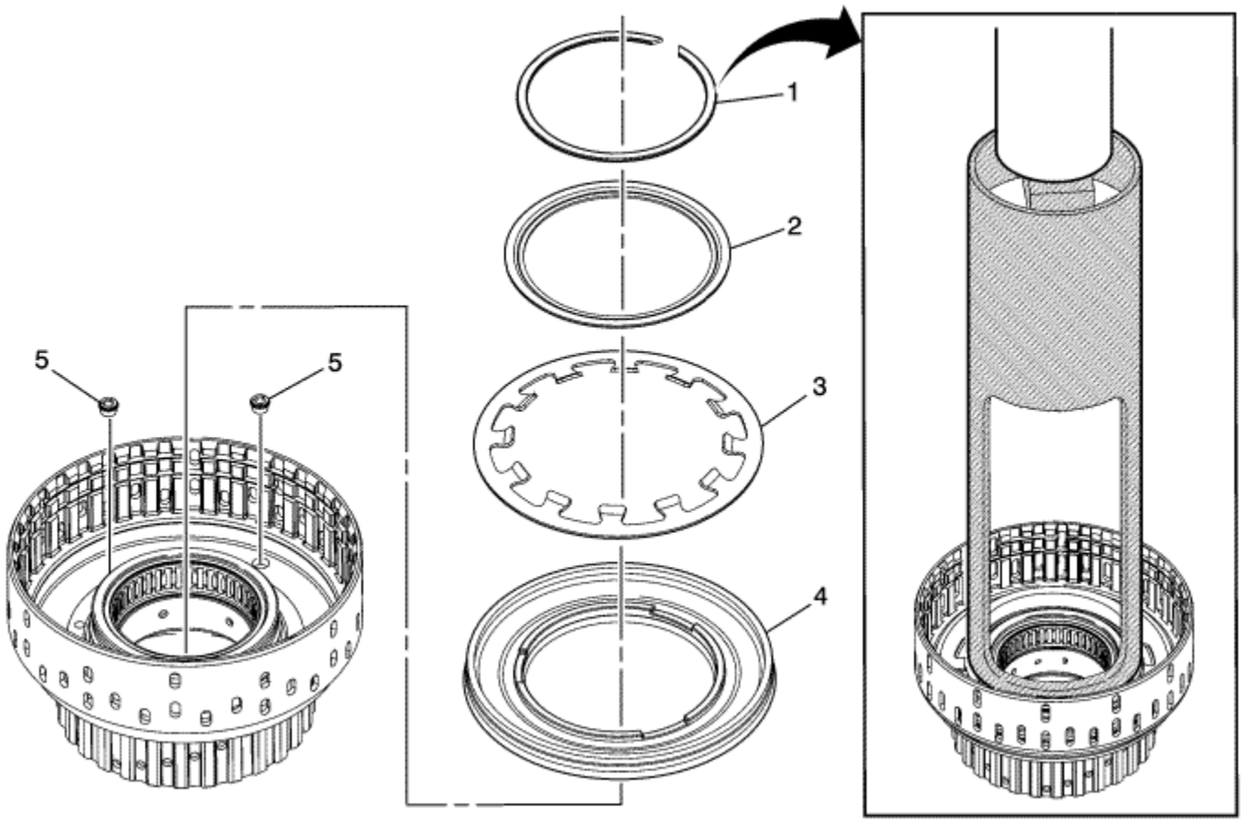

Variable Hi and 2-3-4 Clutch Piston Assembly and Spring Disassemble

Callout	Component Name
1	Variable Hi and 2-3-4 Clutch Spring Retaining Ring **Tip** Discard this retaining ring. It is not reusable. **Special Tools** *DT-47693-2* Compressor For equivalent regional tools, refer to Special Tools .
2	Variable Hi and 2-3-4 Clutch Spring Retainer
3	Variable Hi and 2-3-4 Clutch Spring

4	Variable Hi and 2-3-4 Clutch Piston Assembly
5	Variable Hi and 2-3-4 Clutch Housing Valve

© Copyright Chevrolet. All rights reserved

Centre Support Roller Bearing Replacement

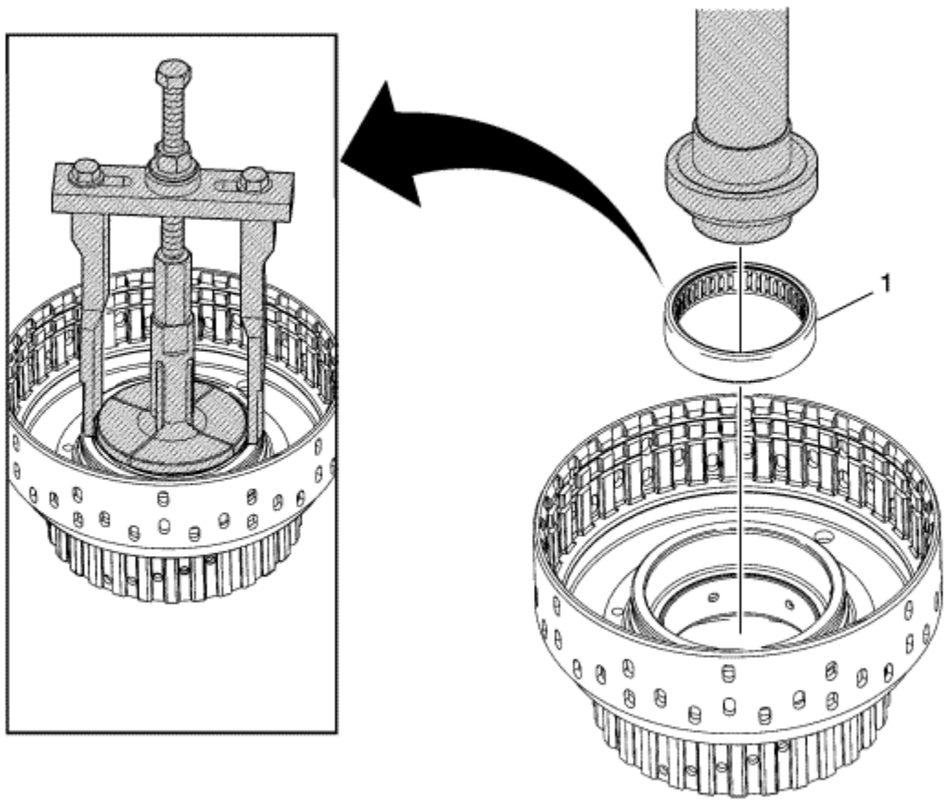

Callout	Component Name
1	Centre Support Roller Bearing Assembly **Tip** To remove the bearing engage the roller bearing, not the race, with DT 45094 and verify from the bottom side. **Special Tools**

- *DT 45094* Bearing Cup Remover
- *DT 45124* Removal Bridge
- *DT-49264* Bearing Cup Installer with Press

For equivalent regional tools, refer to Special Tools .

&#169© Copyright Chevrolet. All rights reserved

Variable High and 2-3-4 Clutch Assemble

Table 1: Variable Hi and 2-3-4 Clutch Piston and Spring
Table 2: Output Carrier Internal Gear and Variable Hi and 2-3-4 Clutch Plates Assemble

Variable Hi and 2-3-4 Clutch Piston and Spring

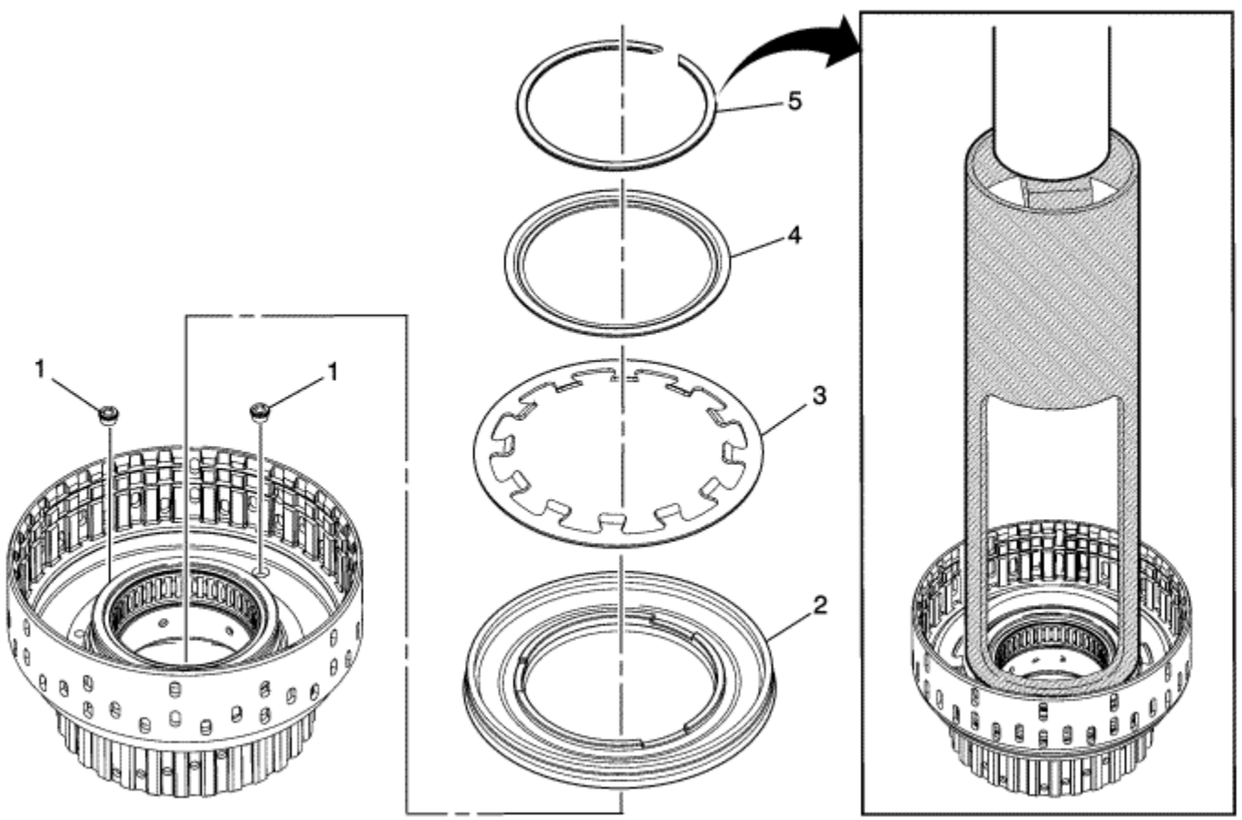

Variable Hi and 2-3-4 Clutch Piston and Spring

Callout	Component Name
Preliminary Procedure Clean and inspect all parts for damage or wear.	
1	Variable Hi and 2-3-4 Clutch Housing Valve
2	Variable Hi and 2-3-4 Clutch Piston Assembly
3	Variable Hi and 2-3-4 Clutch Spring
4	Variable Hi and 2-3-4 Clutch Spring Retainer
5	Variable Hi and 2-3-4 Clutch Spring Retaining Ring **Tip** Install a NEW retaining ring. It is not reusable. **Special Tools** *DT-47693-2* Compressor For equivalent regional tools, refer to Special Tools .

Output Carrier Internal Gear and Variable Hi and 2-3-4 Clutch Plates Assemble

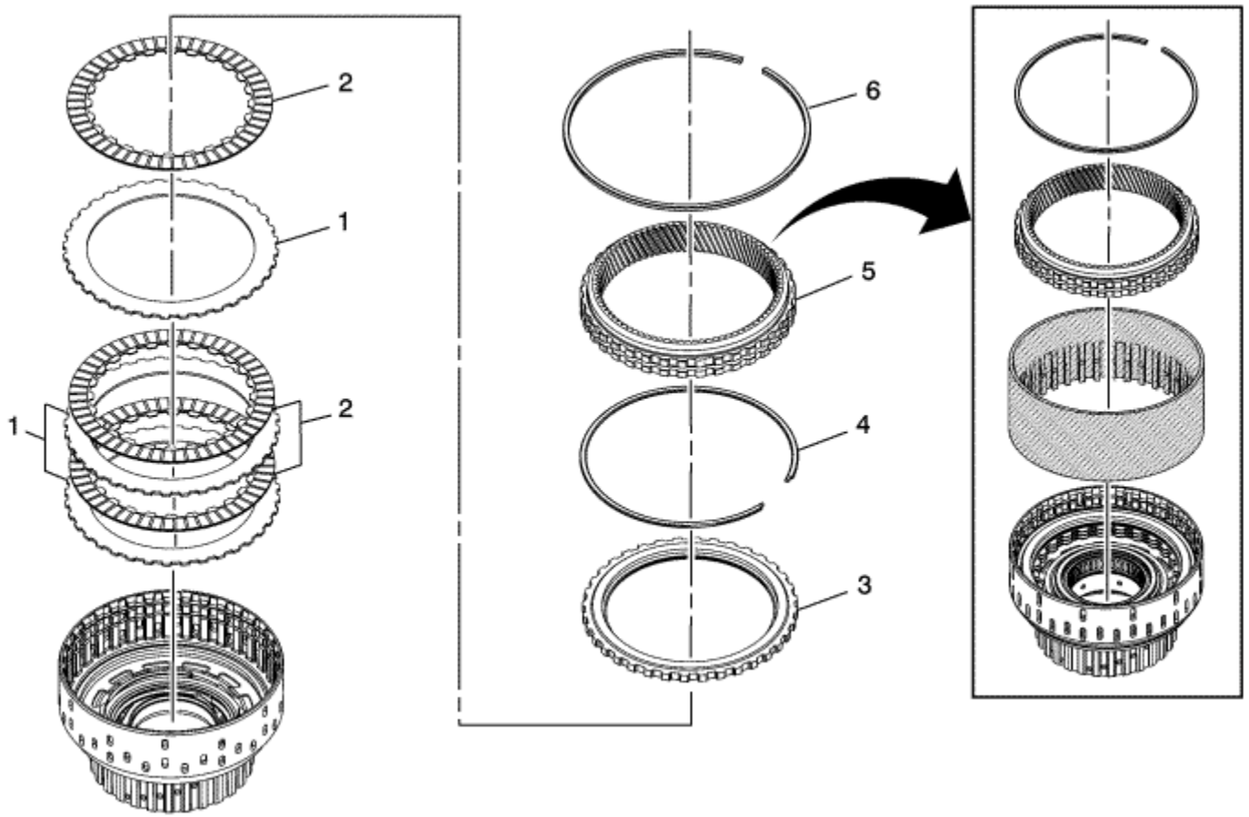

Output Carrier Internal Gear and Variable Hi and 2-3-4 Clutch Plates Assemble

Callout	Component Name
Preliminary Procedure Clean and inspect all parts for damage or wear.	
1	Variable Hi and 2-3-4 Clutch Plate (Qty: 3)
2	Variable Hi and 2-3-4 Clutch Plate Assembly - Friction (Qty: 3)
3	Variable Hi and 2-3-4 Clutch Backing Plate
4	Variable Hi and 2-3-4 Clutch Backing Plate Retaining Ring - Selective **Tip** Install a NEW retaining ring. It is not reusable.
5	Output Carrier Internal Gear

6	Output Carrier Internal Gear Retaining Ring **Tip** Start the opposite side of the retaining ring gap first then work both ends evenly while pushing the internal gear down. **Special Tools** *DT-49468* Retaining Ring Installer For equivalent regional tools, refer to Special Tools .

© Copyright Chevrolet. All rights reserved

Variable High and 2-3-4 Clutch Piston Air Check

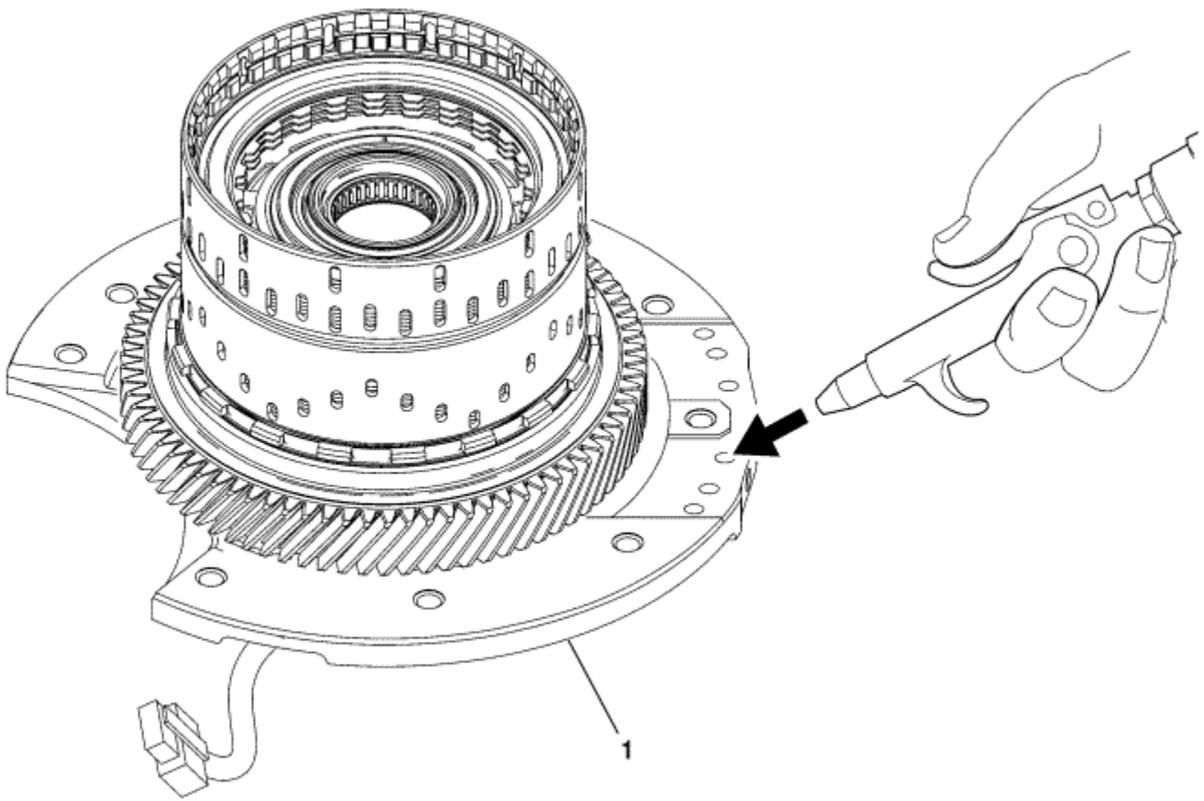

Callout	Component Name
Preliminary Procedure Install the variable hi and 2-3-4 clutch housing assembly onto the centre support assembly.	
	Variable Hi and 2-3-4 Clutch Housing Assembly **Caution:** Regulate the air pressure to 40 psi maximum. High pressure could cause the piston to over travel and damage the piston seals.

1	**Procedure** Apply shop air to the variable hi and 2-3-4 clutch housing. Observe the 2-3-4 clutch piston movement.

© Copyright Chevrolet. All rights reserved

Centre Support Assembly Installation

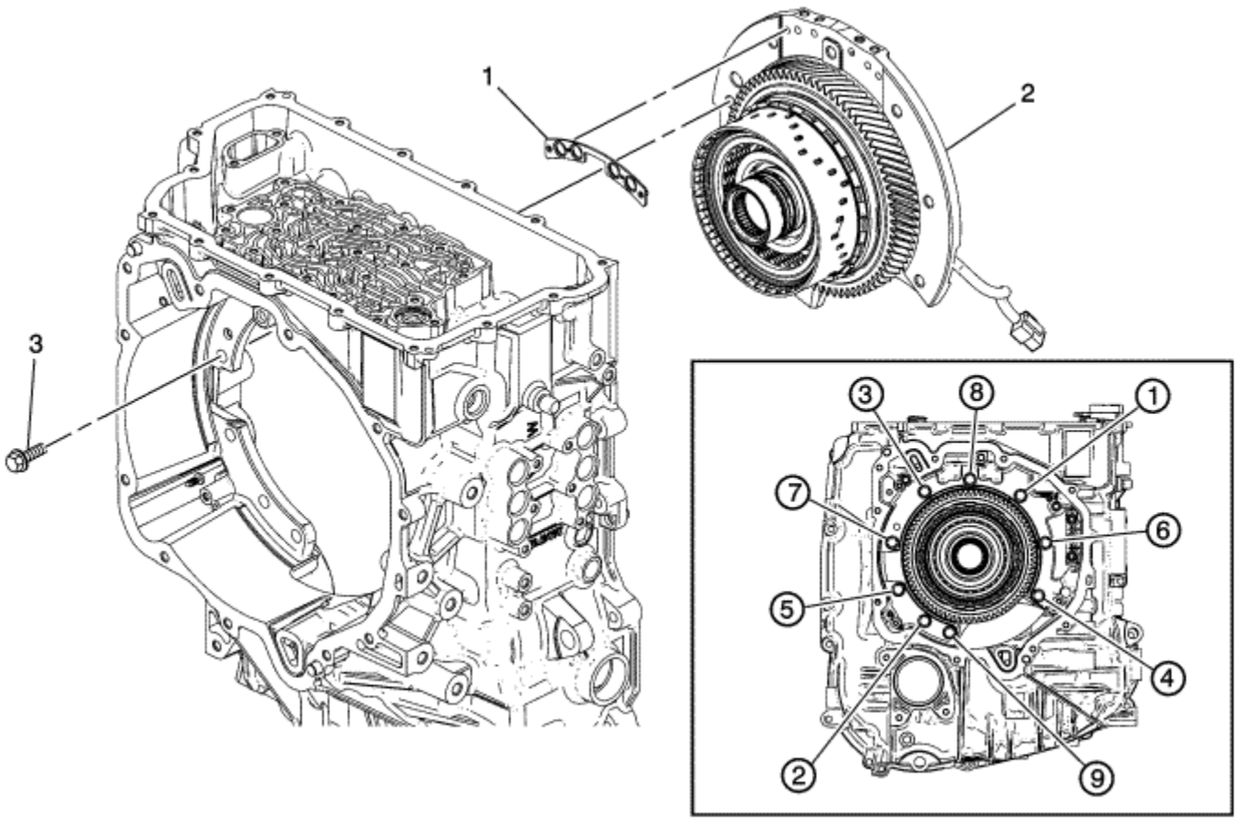

Callout	Component Name
1	Centre Support Oil Passage Seal
2	Centre (w/Variable Low and 1-2 Reverse Clutch) Support Assembly
	Centre Support Bolt M10 x 25 mm (Qty: 9) **Caution:** Refer to Fastener Caution in the Preface section.

3	**Procedure** Tighten bolts in sequence shown. **Tighten** 58 N·m (43 lb ft)

© Copyright Chevrolet. All rights reserved

Variable High and 2-3-4 Clutch and Hub Installation

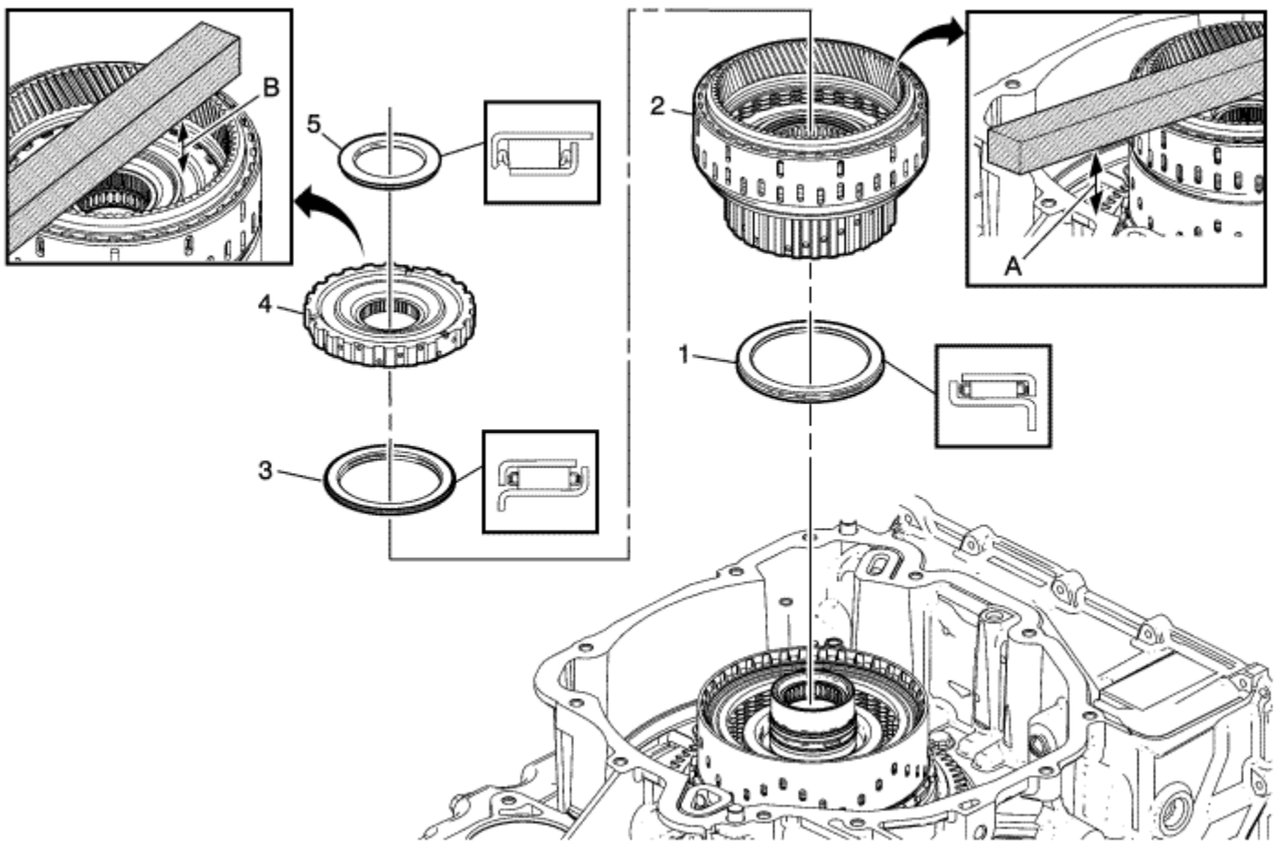

Callout	Component Name
1	Variable Hi and 2-3-4 Clutch Housing Thrust Bearing Assembly
	Variable Hi and 2-3-4 Clutch Assembly **Tip** Use *GE 34673* flat gauge bar to measure for correct installation height.

2	**Specification** A = 31-38 mm (1.22-1.50 in) **Special Tool** *GE 34673* Flat Gauge Bar For equivalent regional tools, refer to Special Tools .
3	Variable Hi and 2-3-4 Clutch Hub Thrust Bearing Assembly
4	Variable Hi and 2-3-4 Clutch Hub **Tip** Use *GE 34673* flat gauge bar to measure for correct installation height. **Specification** B = 30-32 mm (1.18-1.26 in) **Special Tool** *GE 34673* Flat Gauge Bar For equivalent regional tools, refer to Special Tools .
5	Output Carrier Thrust Bearing Assembly

© Copyright Chevrolet. All rights reserved

Output Carrier Bearing Replacement

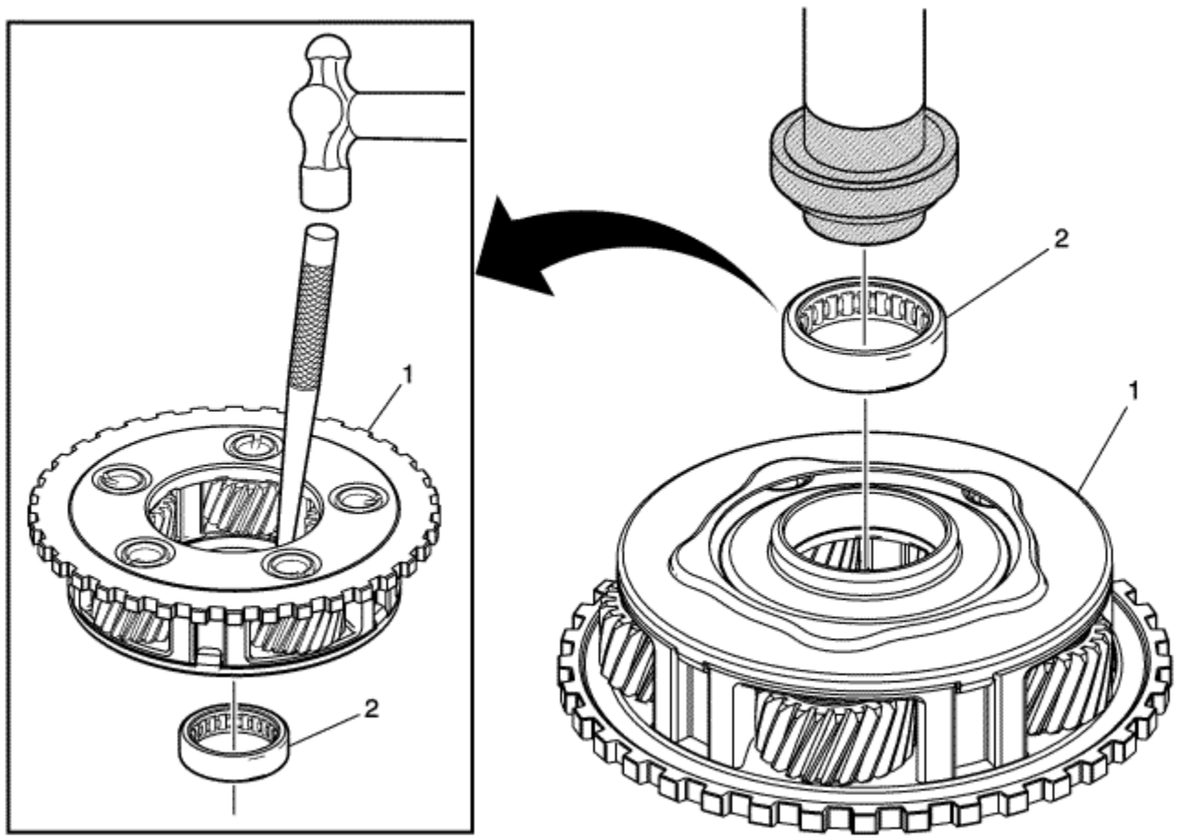

Callout	Component Name
1	Output Carrier Assembly - C2 **Special Tools** • *DT-49264* Bearing Cup Installer with Press • *GE 8092* Driver Handle

	For equivalent regional tools, refer to Special Tools .
2	Output Carrier Roller Bearing Assembly

&#169© Copyright Chevrolet. All rights reserved

Output Carrier Shell, Carrier, Sun Gear, and Sun Gear Shaft Installation

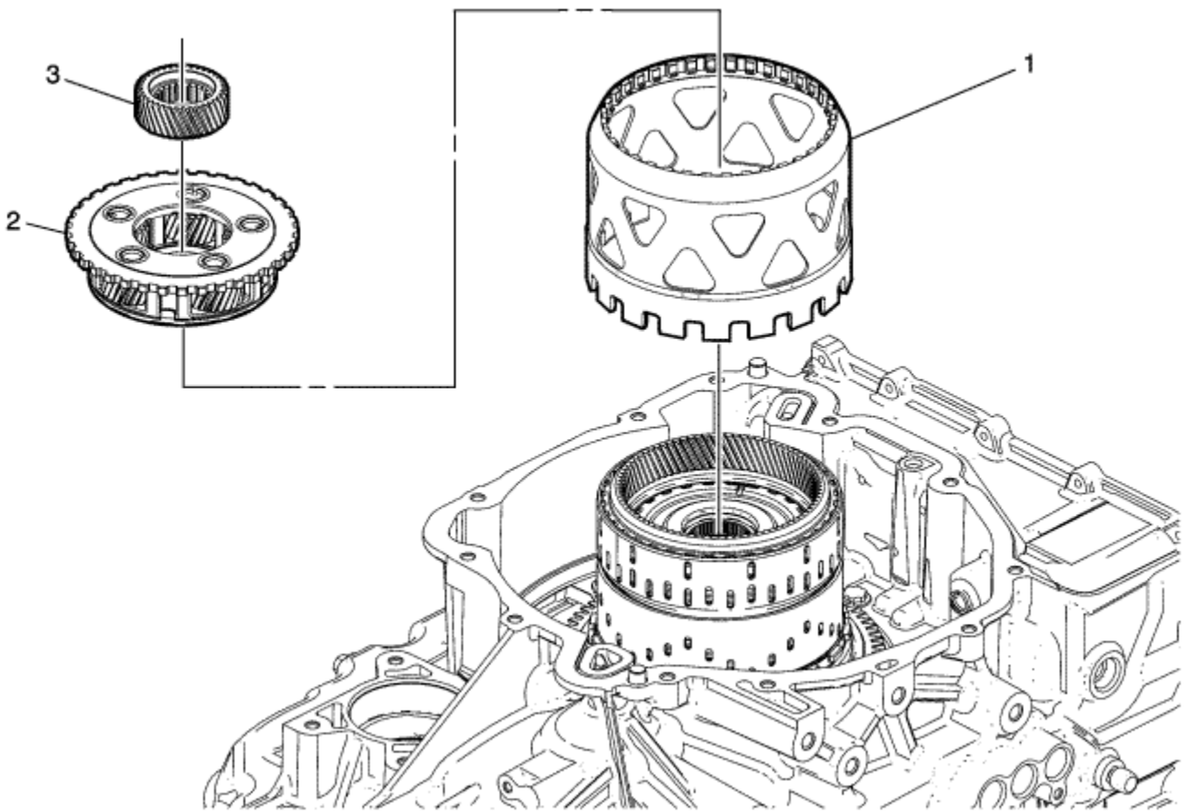

Callout	Component Name
1	Output Carrier Shell
2	Output Carrier Assembly - C2 **Tip** Inspect pinions and listen for bearing noise.
3	Output Sun Gear

4	Output Sun Gear Retaining Ring
5	Output Sun Gear Shaft Lubricant O-Ring Seal **Tip** Install a NEW seal. It is not reusable.
6	Output Sun Gear Shaft

© Copyright Chevrolet. All rights reserved

Drive Motor Generator Rotor and Stator Installation - Unit B

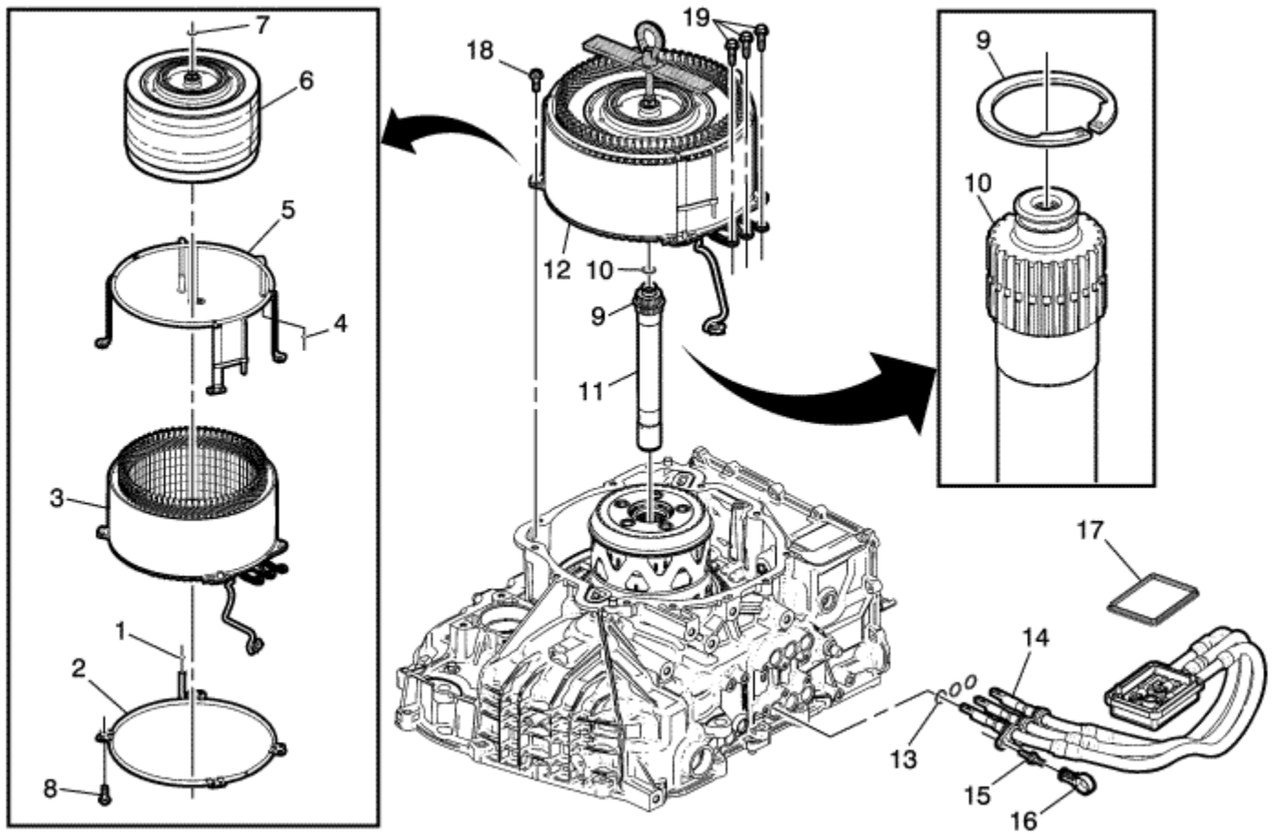

Callout	Component Name
1	Drive Motor/Generator Stator Cooling Tube Seal (Qty: 1) **Tip** Install a NEW seal. It is not reusable.
2	Drive Motor/Generator Stator Cooling Tube Assembly (RHS Unit B)
3	Drive Motor/Generator Stator Assembly - Unit B

4	Drive Motor/Generator Stator Cooling Tube Seal (Qty: 1) **Tip** Install a NEW seal. It is not reusable.
5	Drive Motor/Generator Stator Cooling Tube Assembly (LHS Unit B)
6	Drive Motor/Generator Rotor Assembly - Unit B
7	Drive Motor/Generator Rotor Lubricant Seal **Tip** Install a NEW seal. It is not reusable.
8	Drive Motor/Generator Stator Cooling Tube Retainer (Qty: 2)
9	Drive Motor/Generator Rotor and Stator Assembly - Unit B **Warning:** The generator motor weighs approximately 36 kg (80 lbs). Personal injury may result if you lift the generator motor improperly. **Tip** Insert electrical connector through pass-through hole in case. **Special Tools** *DT 50302* Rotor and Stator Lifter Assembly For equivalent regional tools, refer to Special Tools .
10	Drive Motor/Generator Power Inverter Module Cable Assembly Seal **Tip** Install a NEW seal. It is not reusable.
11	Drive Motor/Generator Power Inverter Module Cable Assembly - 3 Phase - B
12	Drive Motor/Generator Power Inverter Module Cable Stud M6 x 20 mm (Qty: 3) - External **Caution:** Refer to Fastener Caution in the Preface section. **Tighten** 9 N·m (80 lb in)
13	Auxiliary Pump Motor Cable Retainer - 3 Phase - Cable B/Resolver
14	Drive Motor/Generator Power Inverter Module Cable Housing Cover Seal **Tip** Install a NEW seal, it is not reusable.
	Drive Motor/Generator Stator Bolt M6 x 20 mm (Qty: 4)

15	**Tighten** 9 N·m (80 lb in)
16	Drive Motor/Generator Power Inverter Module Cable Connector Bolt M6 x 20 mm (Qty: 3) - Internal **Tighten** 9 N·m (80 lb in)

© Copyright Chevrolet. All rights reserved

Case Cover Assembly Disassemble

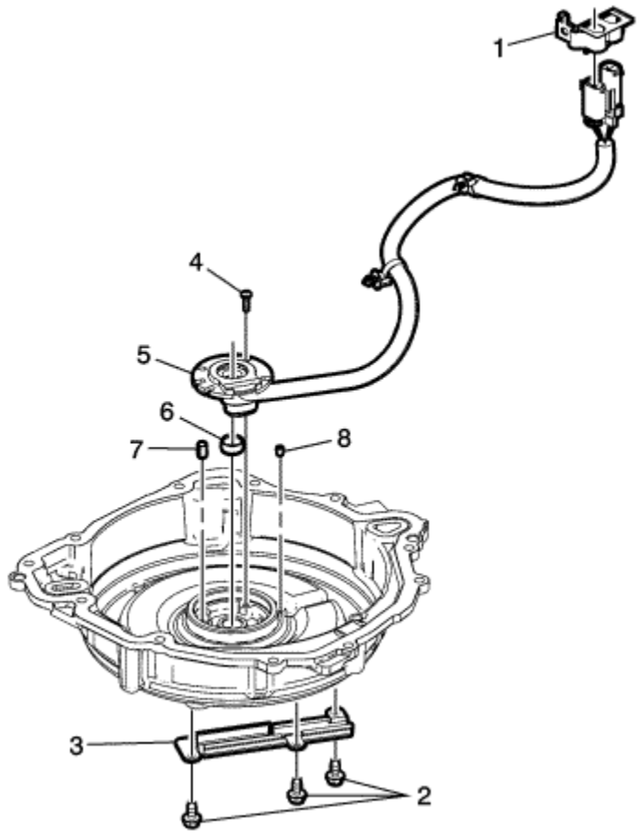

Callout	Component Name
1	A/Trans Control Wiring Harness Connector Bracket
2	A/Trans Control Wiring Harness Shield Bolt M6 x 16 mm (Qty: 3) - External
3	A/Trans Control Wiring Harness Shield
4	Generator/Drive Motor Position Sensor Switch Bolt M5 x 16 mm (Qty: 4)
5	Drive Motor/Generator Position Sensor Stator Assembly

6	Drive Motor/Generator Rotor Lubricant Seal Sleeve
7	Drive Motor/Generator Position Sensor Pin
8	Centre Support Fluid Passage Plug

© Copyright Chevrolet. All rights reserved

Case Cover Assembly Assemble

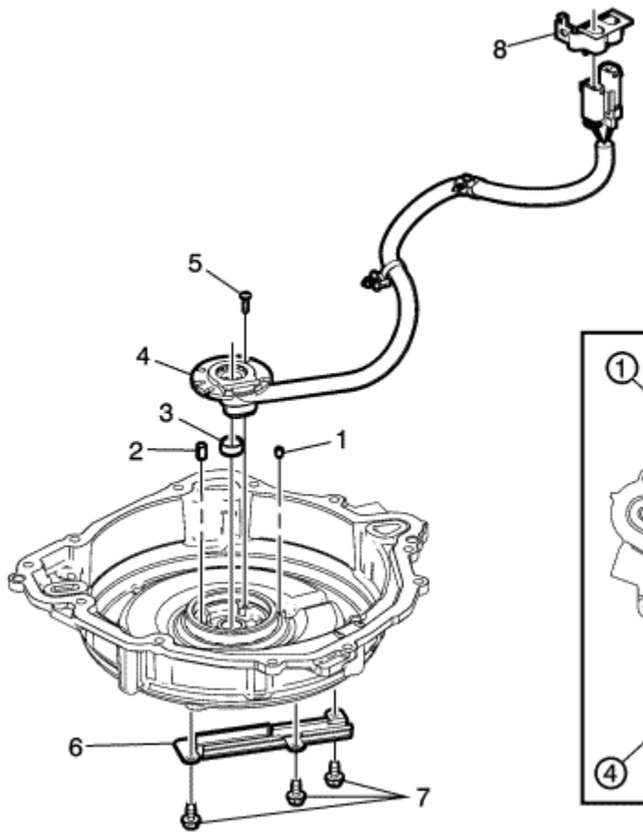

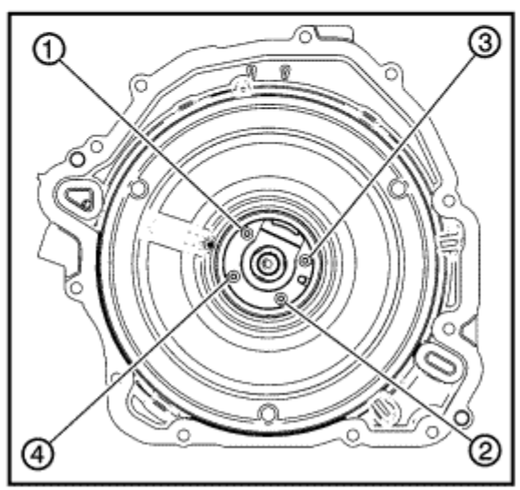

Callout	Component Name
Preliminary Procedure Clean and inspect all parts for wear or damage.	
1	Centre Support Fluid Passage Plug
2	Drive Motor/Generator Position Sensor Pin

3	Drive Motor Rotor Lubricant Seal Sleeve
4	Drive Motor/Generator Position Sensor Stator Assembly
5	Generator/Drive Motor Position Sensor Switch Bolt M5 x 16 mm (Qty: 4) **Procedure** Tighten the bolts in sequence shown. **Tighten** 7.25 N·m (64.2 lb in)
6	A/Trans Control Wiring Harness Shield
7	A/Trans Control Wiring Harness Shield Bolt M6 x 16 mm (Qty: 3) - External **Caution:** Refer to Fastener Caution in the Preface section. **Tighten** 9 N·m (80 lb in)
8	A/Trans Control Wiring Harness Connector Bracket

© Copyright Chevrolet. All rights reserved

Case Cover Assembly Installation

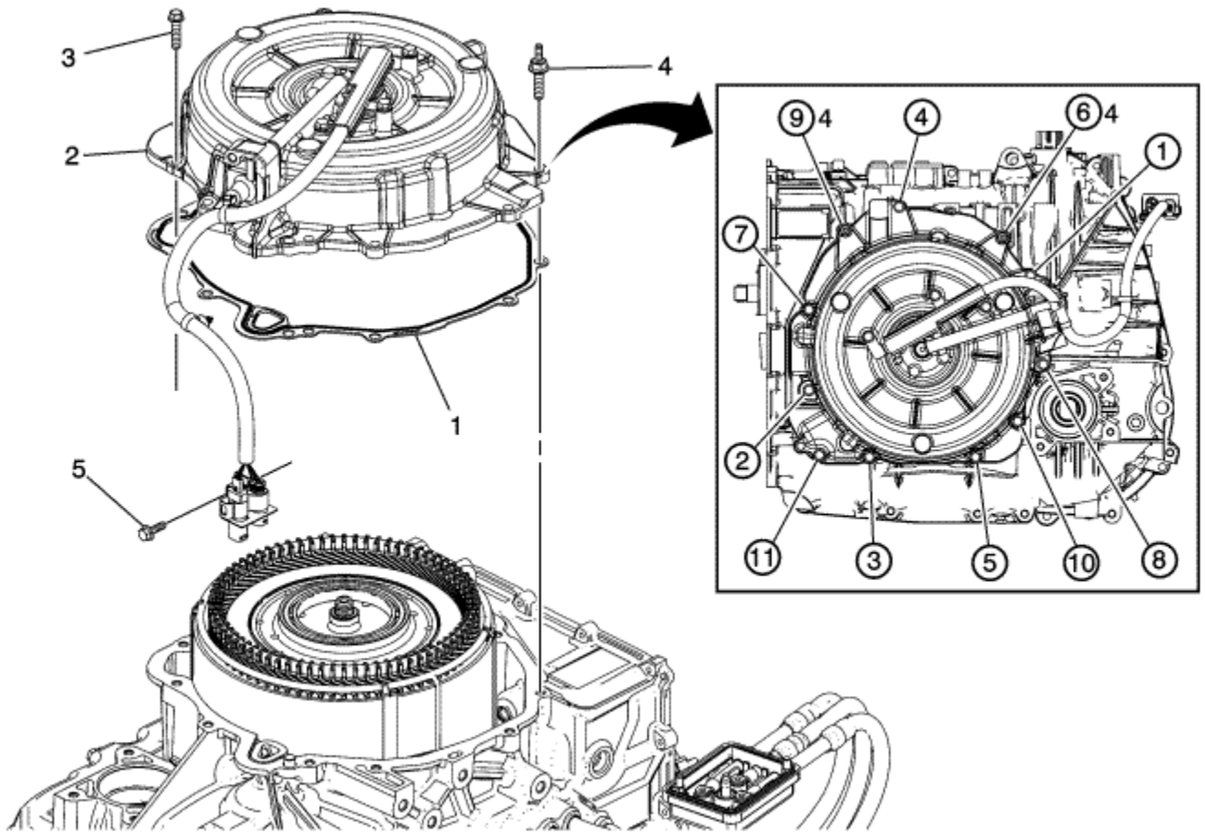

Callout	Component Name
1	A/Trans Case Cover Gasket
2	A/Trans Case Cover Assembly **Tip** May need to align bolt holes.
	A/Trans Case Cover Bolt M8 x 30 mm (Qty: 9)

3	**Caution:** Refer to Fastener Caution in the Preface section. **Procedure** Tighten the bolts in sequence shown. **Tighten** 22 N·m (16 lb ft)
4	Case Cover Stud M8 x 30 (Qty: 2) **Tighten** 22 N·m (16 lb ft)
5	A/Trans Wiring Harness Shield Bolt M6 x 20 mm (Qty: 1) External **Tighten** 9 N·m (80 lb in)

© Copyright Chevrolet. All rights reserved

Front Wheel Drive Shaft Bearing Replacement

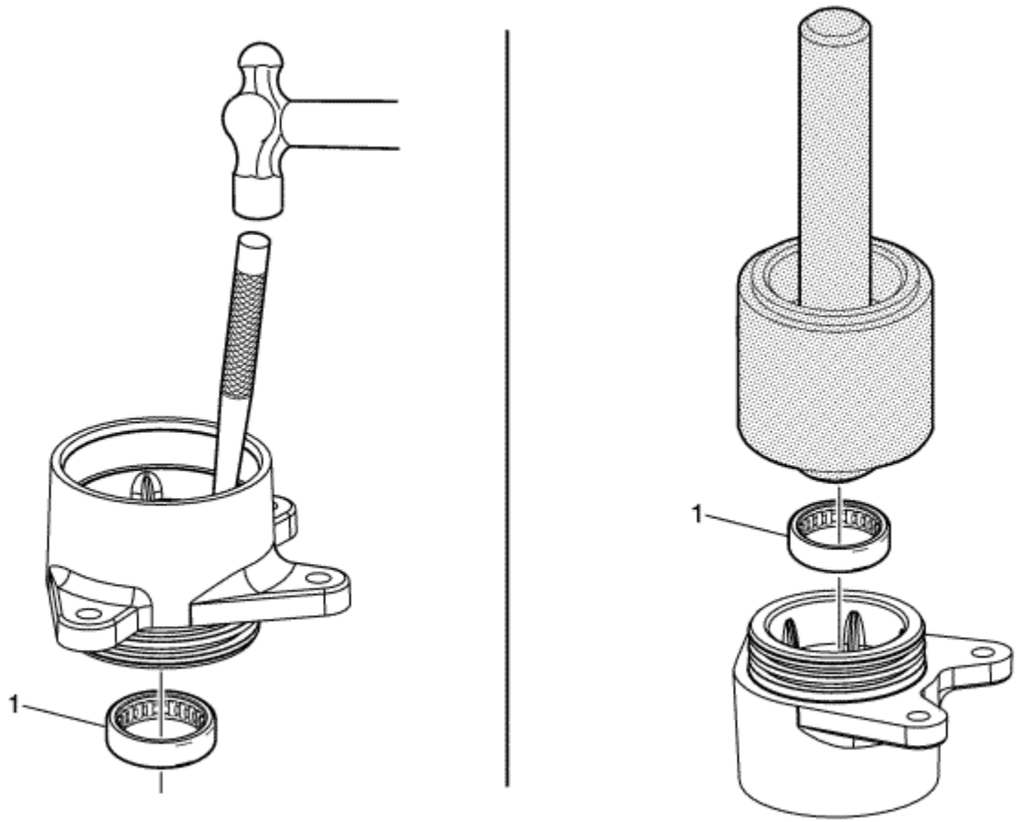

Callout	Component Name
1	Front Wheel Drive Shaft Bearing Assembly **Special Tools** • *DT 50301* Seal and Bearing Installer • *GE 8092* Driver Handle

	For equivalent regional tools, refer to Special Tools .

&#169© Copyright Chevrolet. All rights reserved

Case Extension Assembly Installation

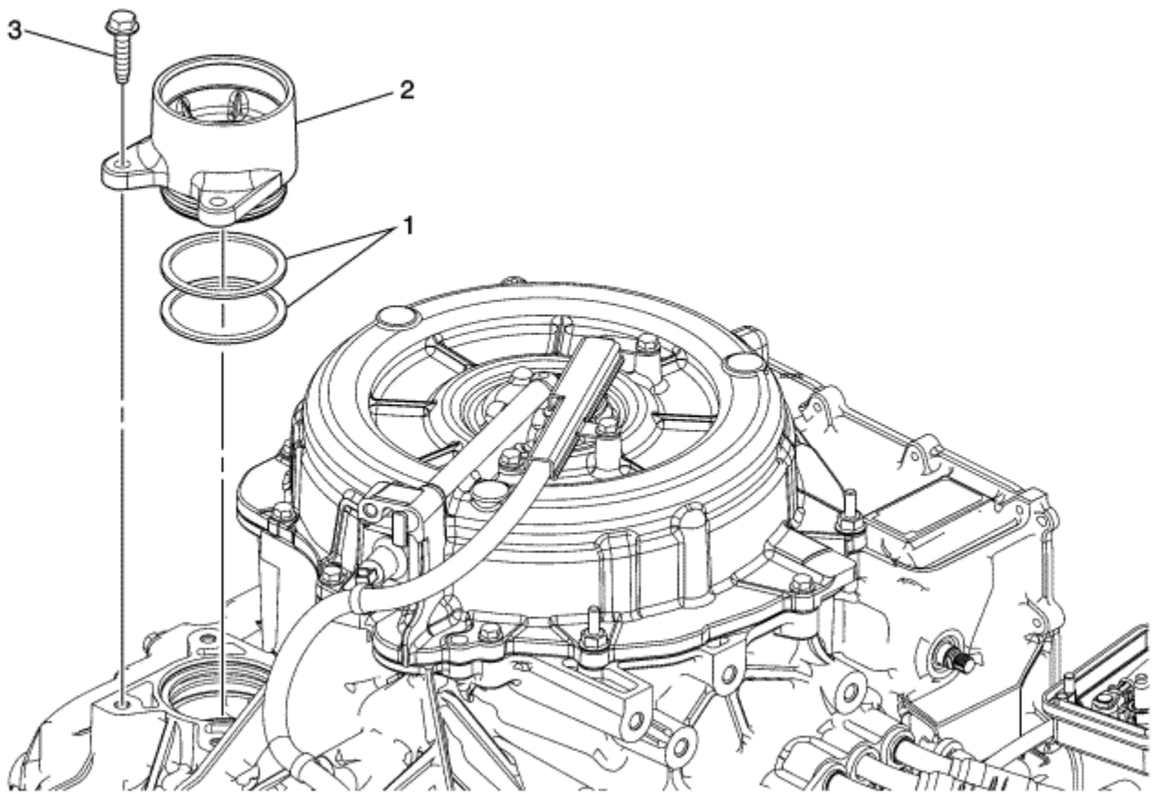

Callout	Component Name
1	A/Trans Case Extension Seal (Qty: 2) **Tip** Install NEW seals. They are not reusable.
2	Case Extension Assembly
	Case Extension Bolt M10 x 25 mm (Qty: 3)

3	**Tighten** 22 N·m (16.2 lb ft)

© Copyright Chevrolet. All rights reserved

Front Differential Drive Pinion Gear with Transfer Gear Overhaul

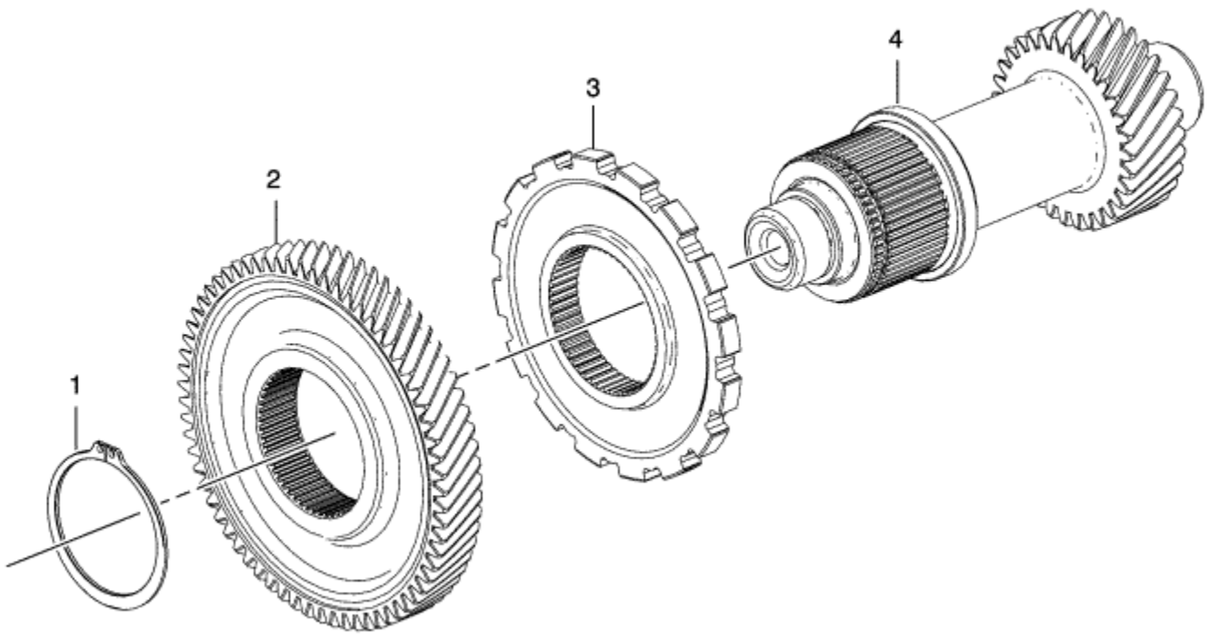

Callout	Component Name
1	Front Differential Transfer Driven Gear Retaining Ring
2	Front Differential Transfer Driven Gear
3	Park Gear
4	Front Differential Drive Pinion Gear

© Copyright Chevrolet. All rights reserved

Front Differential Carrier Bearing Replacement

Table 1: Removal
Table 2: Installation

Removal

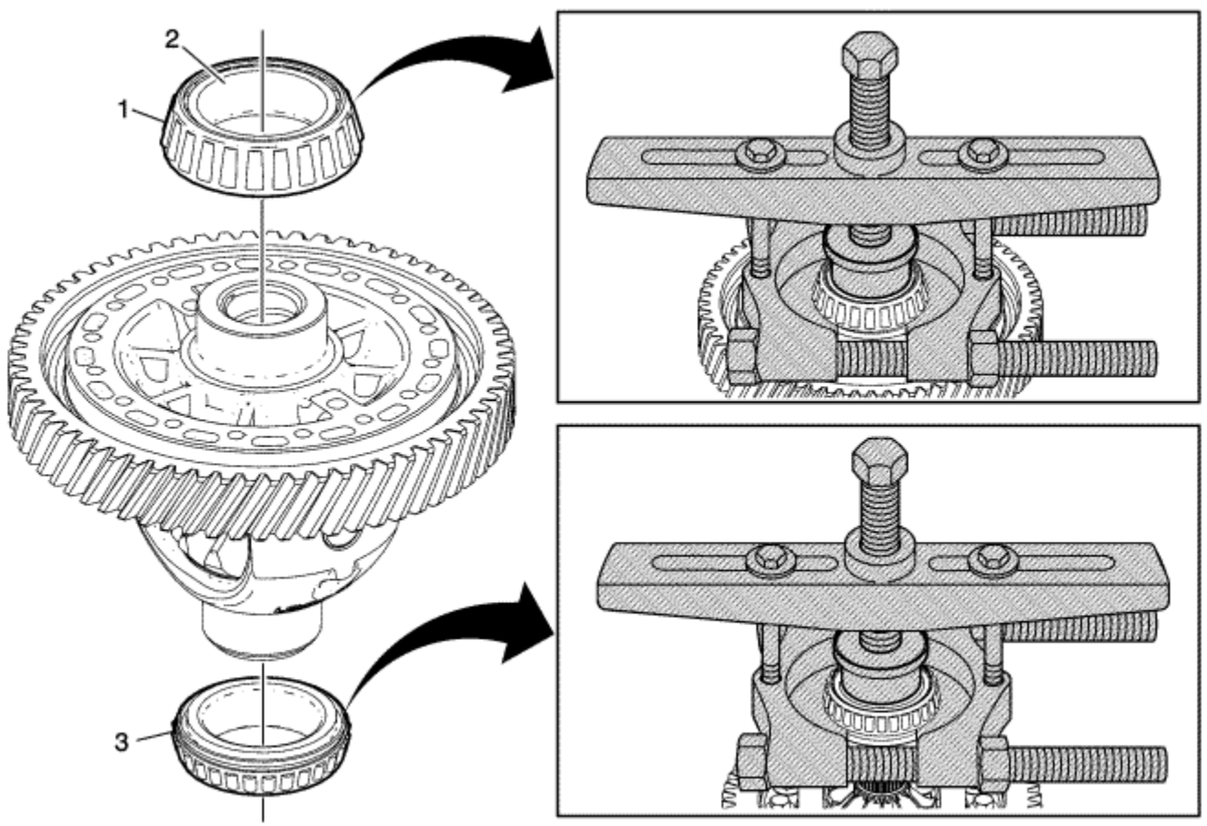

Removal

Callout	Component Name
1	Front Differential Carrier Bearing Assembly (RHS) **Special Tools** • *DT-49830* Differential Bearing Installer/Pilot • *GE 8433-1* Puller Bar or equivalent Use with 4-5 in Bolts • *GE 22912-B* Rear Pinion and Axle Bearing Remover or equivalent For equivalent regional tools, refer to Special Tools .
2	Inner Race **Tip** Ensure all 3 legs of the puller make contact with the inner race of the bearing.
3	Front Differential Carrier Bearing Assembly (LHS) **Tip** • AWD differential may need longer bolts, 2-3/8 x 5 x 24 thread bolts. • When removing the front differential carrier bearing assembly use DT-47928-2 bearing support which is part of *DT-47928* bearing installer . **Special Tools** • *DT-47928* Bearing Installer • *DT-49830* Differential Bearing Installer/Pilot • *GE 8433-1* Puller Bar or equivalent Use with 4-5 in Bolts • *GE 22912-B* Rear Pinion and Axle Bearing Remover or equivalent For equivalent regional tools, refer to Special Tools .

Installation

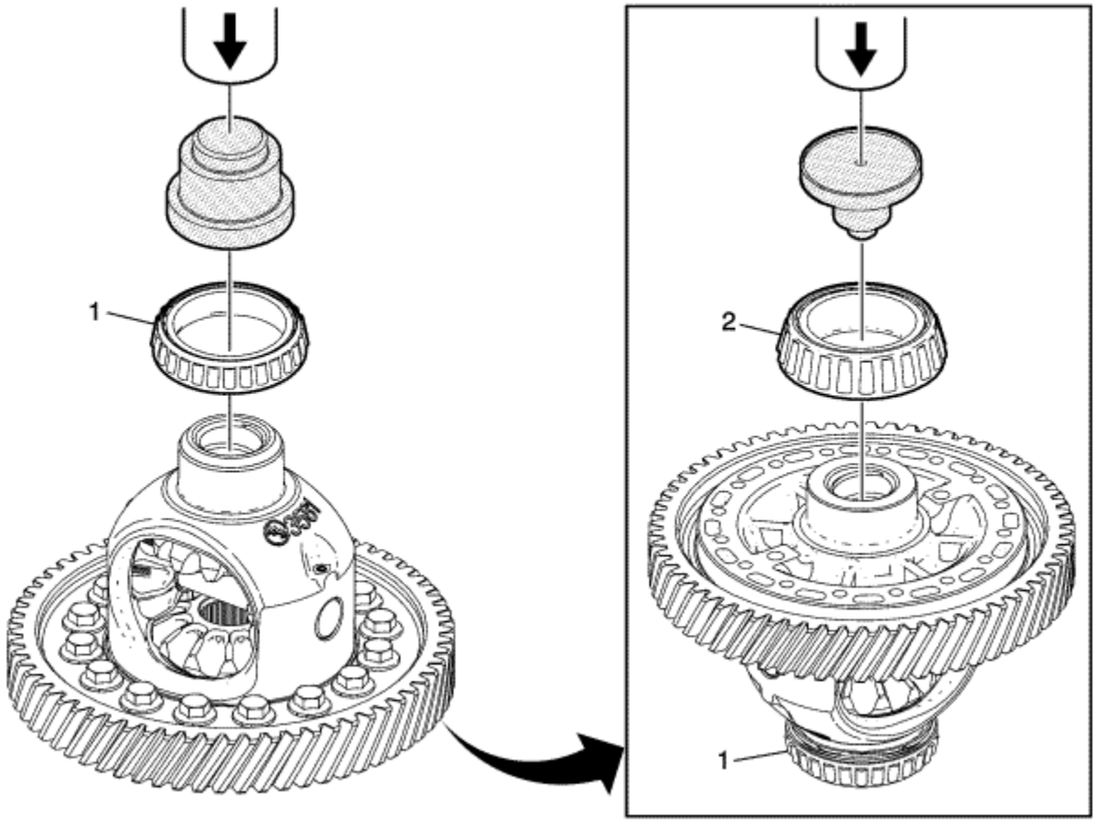

Installation

Callout	Component Name
1	Front Differential Carrier Bearing Assembly (LHS) **Caution:** Pressing against the bearing assembly can damage the bearing and cause premature bearing failure. **Tip** When installing the front differential carrier bearing assembly use DT-47928-2 bearing support which is part of *DT-47928* bearing installer . **Special Tools** • *DT-47928* Bearing Installer • *DT-49830* Differential Bearing Installer/Pilot

	For equivalent regional tools, refer to Special Tools .
2	Front Differential Carrier Bearing Assembly (RHS) **Caution:** Pressing against the bearing assembly can damage the bearing and cause premature bearing failure. **Tip** When installing the front differential carrier bearing assembly use DT-47928-2 bearing support which is part of *DT-47928* bearing installer . **Special Tools** • *DT-47928* Bearing Installer • *DT-49830* Differential Bearing Installer/Pilot For equivalent regional tools, refer to Special Tools .

&#169© Copyright Chevrolet. All rights reserved

Front Differential Carrier Cleaning and Inspection

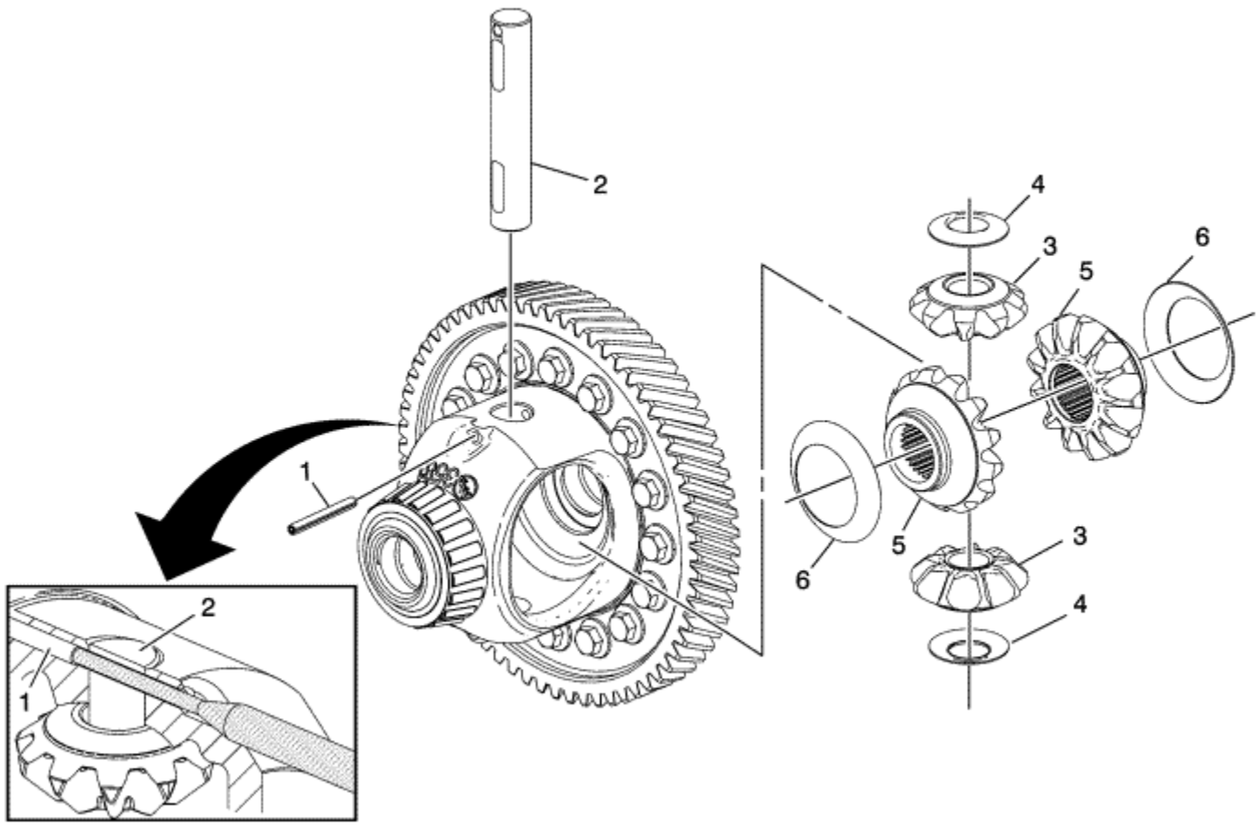

Callout	Component Name
Caution: After cleaning the transmission components, allow to air dry. Do not use cloth or paper towels in order to dry any transmission components. Lint from the towels can cause component failure. **Caution:** Do not reuse cleaning solvents. Previously used solvents may deposit sediment which may damage the component. **Caution:** Keep the thrust washers with the gears to which they were matched. The thrust washers are selective sizes and it is difficult to identify the proper washer thickness.	

Improper assembly can cause premature failure of the differential assembly.

Preliminary Procedure

Clean and inspect the differential assembly, pinion gears and thrust washers for scoring, wear or damage. The differential assembly is only serviced as an assembly.

1	Differential Carrier Locator Pin **Tip** • 3/16 in (5 mm) 7 in Punch or equivalent • Discard and use a NEW retainer.
2	Differential Pinion Gear Shaft
3	Differential Pinion Gear
4	Differential Pinion Gear Thrust Washer
5	Differential Side Gear
6	Differential Side Gear Thrust Washer

&#169© Copyright Chevrolet. All rights reserved

Front Differential Drive Pinion Gear Bearing Thrust Washer and Front Differential Bearing Washer Measurement

Table 1: Front Differential Carrier and Front Differential Drive Pinion with Transfer Gear Installation
Table 2: Differential Thrust Washer Gauge Installation
Table 3: Torque Sequence
Table 4: Differential Shim Selection

Front Differential Carrier and Front Differential Drive Pinion with Transfer Gear Installation

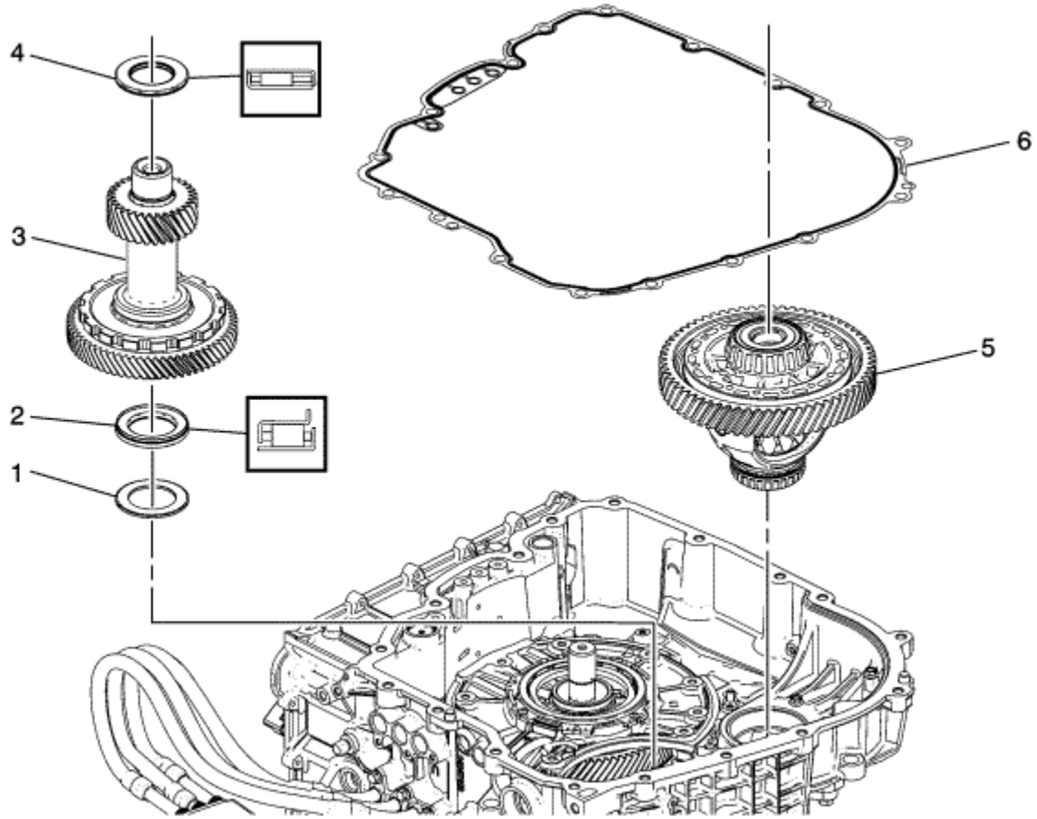

Front Differential Carrier and Front Differential Drive Pinion with Transfer Gear Installation

Callout	Component Name
1	Front Differential Bearing Spacer
2	Front Drive Pinion Gear Shaft Thrust Bearing Assembly (LHS)
3	Front Differential Drive Pinion (w/Transfer Gear) Gear Assembly
4	Front Drive Pinion Gear Shaft Thrust Bearing Assembly - Selective (RHS)
5	Front Differential Carrier Assembly (FWD)
6	Torque Damper Housing Outer Seal

Differential Thrust Washer Gauge Installation

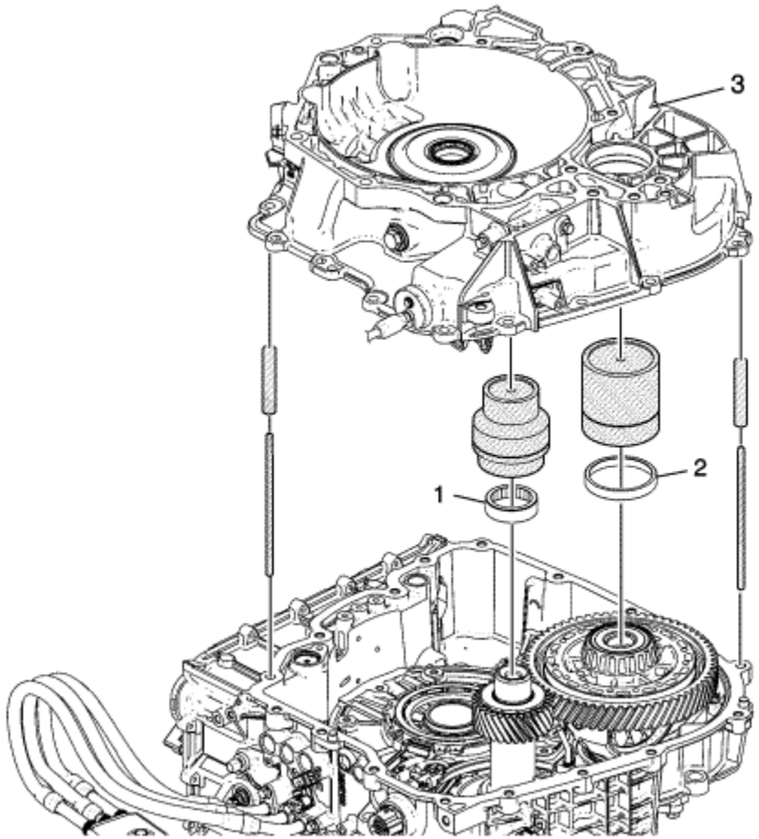

Differential Thrust Washer Gauge Installation

Callout	Component Name
1	Front Differential Drive Pinion Gear Roller Bearing Assembly **Tip** After placing the bearing cup on the gear, place DT-47800-2 which is part of *DT-47800* kit , onto the bearing cup. **Special Tools** • *DT-47800* Thrust Washer Selection Gauge Kit • *DT-47800-10* Thrust Washer Selection Bolts, Spacer and Shims For equivalent regional tools, refer to Special Tools .
	Front Differential Drive Pinion Gear Bearing Cup

2	**Tip** After placing the bearing cup on the gear, place DT-47800-2 which is part of *DT-47800* kit , onto the bearing cup. **Special Tool** *DT-47800* Thrust Washer Selection Gauge Kit For equivalent regional tools, refer to Special Tools .
3	Torque Damper and Differential (w/Fluid Pump) Housing Assembly **Tip** • Install 2 *DT-47800-10* thrust washer selection bolts, spacer and shims , into a case threaded hole at approximately 180 degrees apart. • Some alignment of DT-47800-1 and 2 which is part of *DT-47800* kit , may be required while lowering the housing onto the case. • Install DT-47800-3 which is part of *DT-47800* kit , spacer over DT-47800-6. **Special Tools** • *DT-47800* Thrust Washer Selection Gauge Kit • *DT-47800-10* Thrust Washer Selection Bolts, Spacer and Shims For equivalent regional tools, refer to Special Tools .

Torque Sequence

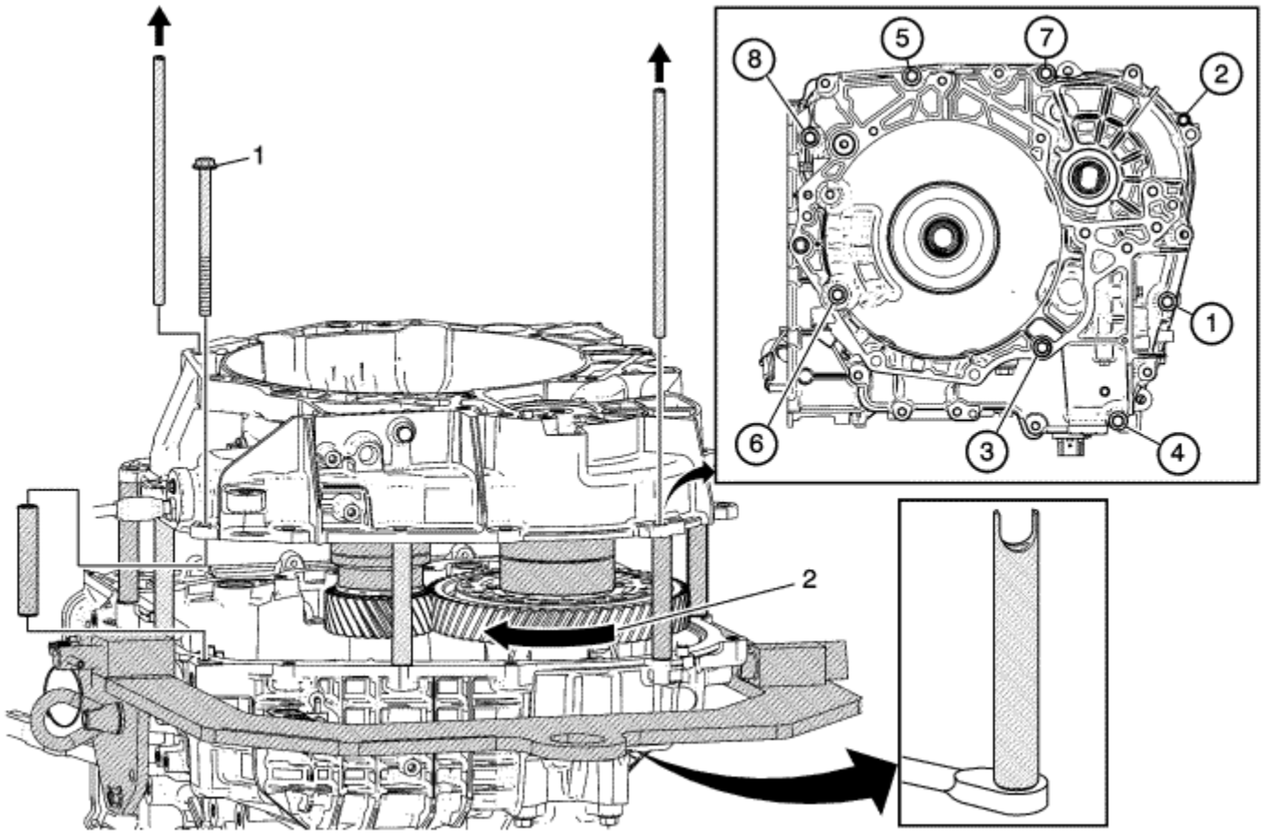

Torque Sequence

Callout	Component Name
1	Spacer Bolts M8 x 127 mm (Qty: 8) **Caution:** Refer to Fastener Caution in the Preface section. **Procedure** 1. Install the remaining spacers evenly at every other bolt hole. 2. Remove the *DT-47800-10* thrust washer selection bolts, spacer and shims , guide pins and install spacer bolts in all bolt holes at spacer locations. 3. Tighten the bolts in sequence shown. **Tighten** 30 N·m (22 lb ft)

	Special Tools • *DT-47800* Thrust Washer Selection Gauge Kit • *DT-47800-10* Thrust Washer Selection Bolts, Spacer and Shims For equivalent regional tools, refer to Special Tools .
2	Front Differential Carrier Assembly **Caution:** If the bearings are not properly seated into the bearing cups, the washer selection will be inaccurate and the bearing pre-load will be set too low. Low bearing pre-load will cause premature failure of the front differential drive pinion gear. **Tip** *DT-47793* rotating tool can be used to rotate the differential from the case side. **Special Tools** *DT-47793* Differential Rotating Tool For equivalent regional tools, refer to Special Tools .

Differential Shim Selection

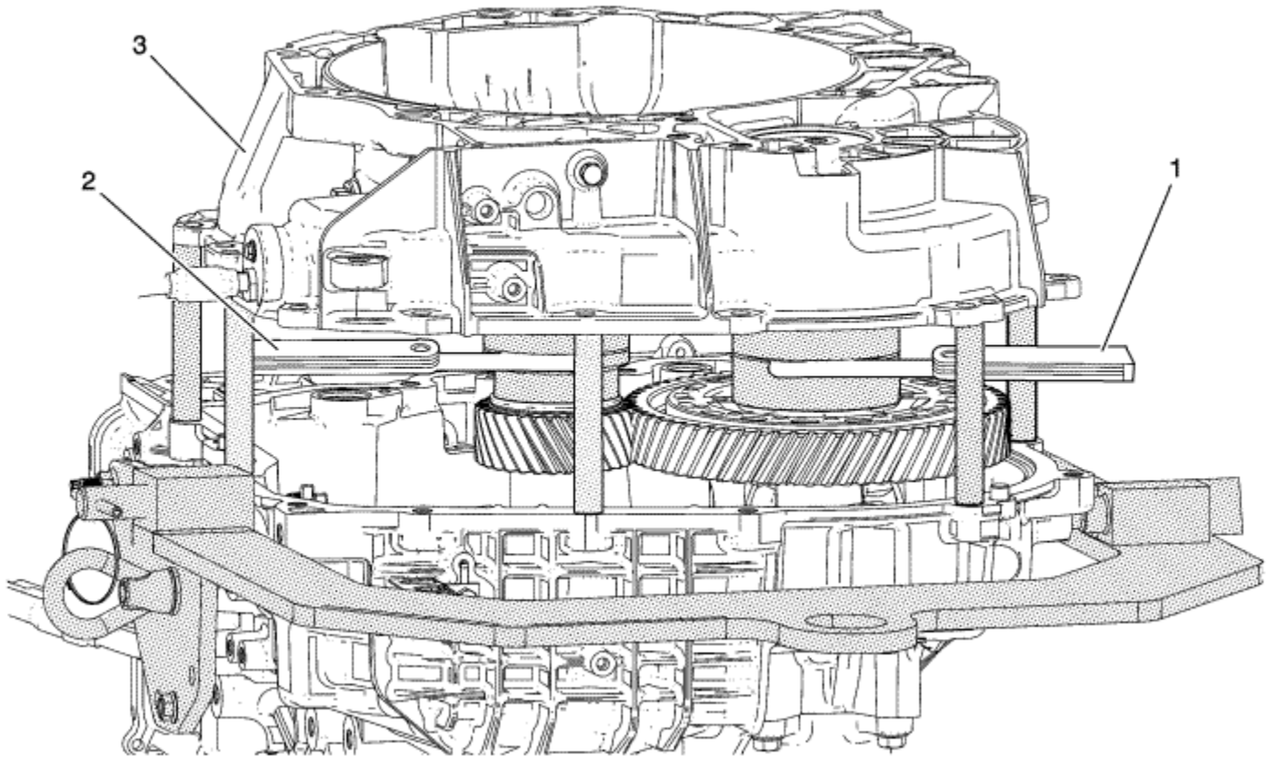

Differential Shim Selection

Callout	Component Name
1	Front Differential Bearing Washer **Procedure** 1. Place DT-47800-7 in the gap in DT-47800-2 which are both part of *DT-47800* kit , to determine the proper thrust washer. Choose the correct thrust washer. Refer to Taper Bearing Preload Selective Specifications . 2. Continue trying different sizes of DT-47800-7 which is part of *DT-47800* kit , until the gauge will no longer fit into the gap. The correct thrust washer size is equal to the largest blade gauge that fits into the gap. 3. Match the size of the correct DT-47800-7 blade which is part of *DT-47800* kit , to the colour code in the thrust washer specification chart. The washer colour coding is on the outside diameter of the washer. 4. The gap in DT-47800-2 which is part of *DT-47800* kit , may not be even. Hold the top of the gauge and rotate the bottom of the gauge to even out the gap. Take two gap measurements 180 degrees apart. Average the two measurements and select the thrust washer that is closest to the average.

	5. The washer colour coding is on the outside diameter of the washer. **Special Tools** *DT-47800* Thrust Washer Selective Gauge Kit For equivalent regional tools, refer to Special Tools .
2	Front Differential Drive Pinion Gear Bearing Thrust Washer **Procedure** 1. Place DT-47800-7 in the gap in DT-47800-1 which are both part of *DT-47800* kit , to determine the proper thrust washer. Choose the correct thrust washer. Refer to Taper Bearing Preload Selective Specifications . 2. Continue trying different sizes of DT-47800-7 which is part of *DT-47800* kit , until the gauge will no longer fit into the gap. The correct thrust washer size is equal to the largest blade gauge that fits into the gap. 3. Match the size of the correct DT-47800-7 blade which is part of *DT-47800* kit , to the colour code in the thrust washer specification chart. The washer colour coding is on the outside diameter of the washer. 4. The gap in DT-47800-1 which is part of *DT-47800* kit , may not be even. Hold the top of the gauge and rotate the bottom of the gauge to even out the gap. Take two gap measurements 180 degrees apart. Average the two measurements and select the thrust washer that is closest to the average. 5. The washer colour coding is on the outside diameter of the washer. **Special Tools** *DT-47800* Thrust Washer Selection Gauge Kit For equivalent regional tools, refer to Special Tools .
3	Torque Damper and Differential (w/Fluid Pump) Housing Assembly **Procedure** 1. Remove the DT-47800-3 which is part of *DT-47800* kit , bolts and spacers. 2. Remove the torque damper housing. 3. Remove the DT-47800-1 and DT-47800-2 which are both part of *DT-47800* kit . 4. Remove the torque damper housing seal. 5. Remove the pinion gear and differential bearing cups. 6. Install the bearing cups and thrust washers into the torque damper housing according to the replacement procedures. Refer to Front Differential Drive Pinion Gear Bearing Cup Removal - Torque Damper Side and Front Differential Drive Pinion Gear Roller Bearing and Lubricant Dam Replacement . **Tip** DT-47800-1 and DT-47800-2 which are both part of *DT-47800* kit , may stick in the torque damper housing. Be careful not to drop the gauges.

	Special Tool *DT-47800* Thrust Washer Selection Gauge Kit For equivalent regional tools, refer to Special Tools .

&#169© Copyright Chevrolet. All rights reserved

Front Differential Drive Pinion Gear Bearing Cup Installation - Torque Damper Side

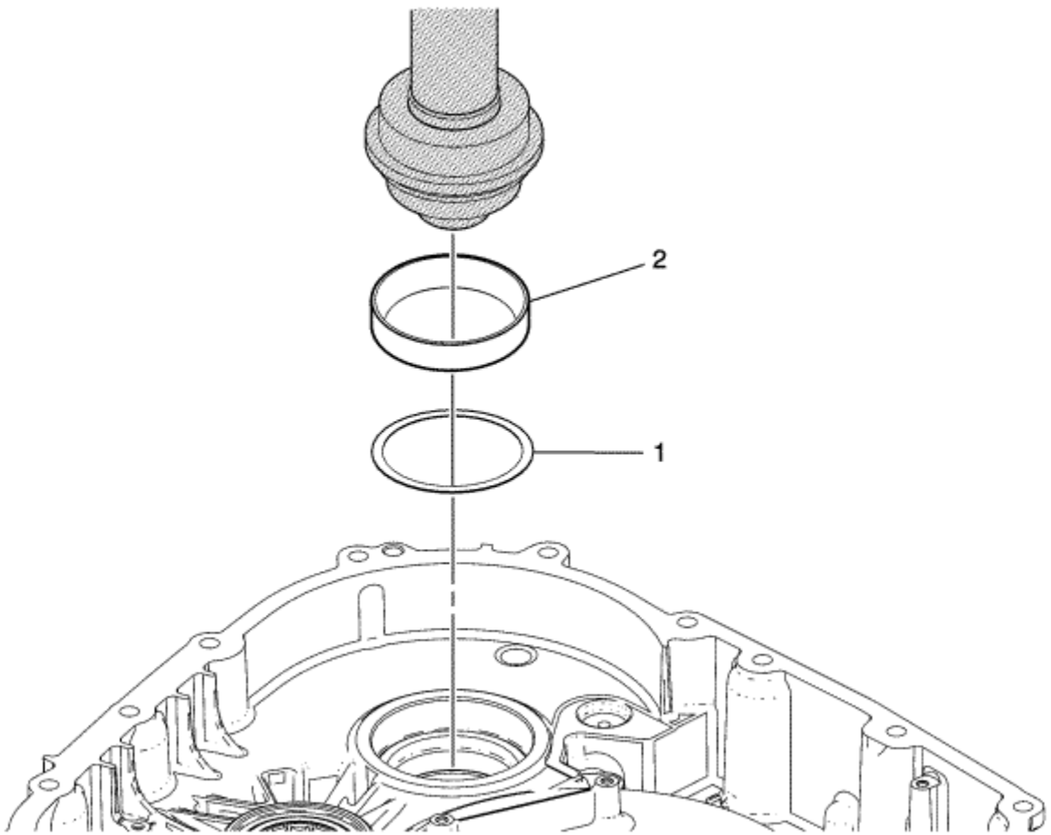

Callout	Component Name
Preliminary Procedures	

- Install the correct differential bearing washer as determined by the thrust washer measurement procedure. Refer to Front Differential Drive Pinion Gear Bearing Thrust Washer and Front Differential Bearing Washer Measurement .
- Do not install the bearing cup until after the selective washer measurement has been performed. Refer to Front Differential Drive Pinion Gear Bearing Thrust Washer and Front Differential Bearing Washer Measurement .

1	Front Differential Bearing Washer - Selective
2	Front Differential Drive Pinion Gear Bearing Cup **Caution:** Support the back side of the torque damper housing while installing the bearing cup. Install the bearing cup until it stops moving. Applying excessive pressure to the bearing cup once it is seated could cause damage to the torque Damper housing casting. **Special Tools** • *DT-49263* Bearing Cup Installer • *GE 8092* Driver Handle For equivalent regional tools, refer to Special Tools .

&#169© Copyright Chevrolet. All rights reserved

Front Differential Drive Pinion Gear Roller Bearing and Lubricant Dam Installation - Torque Damper Side

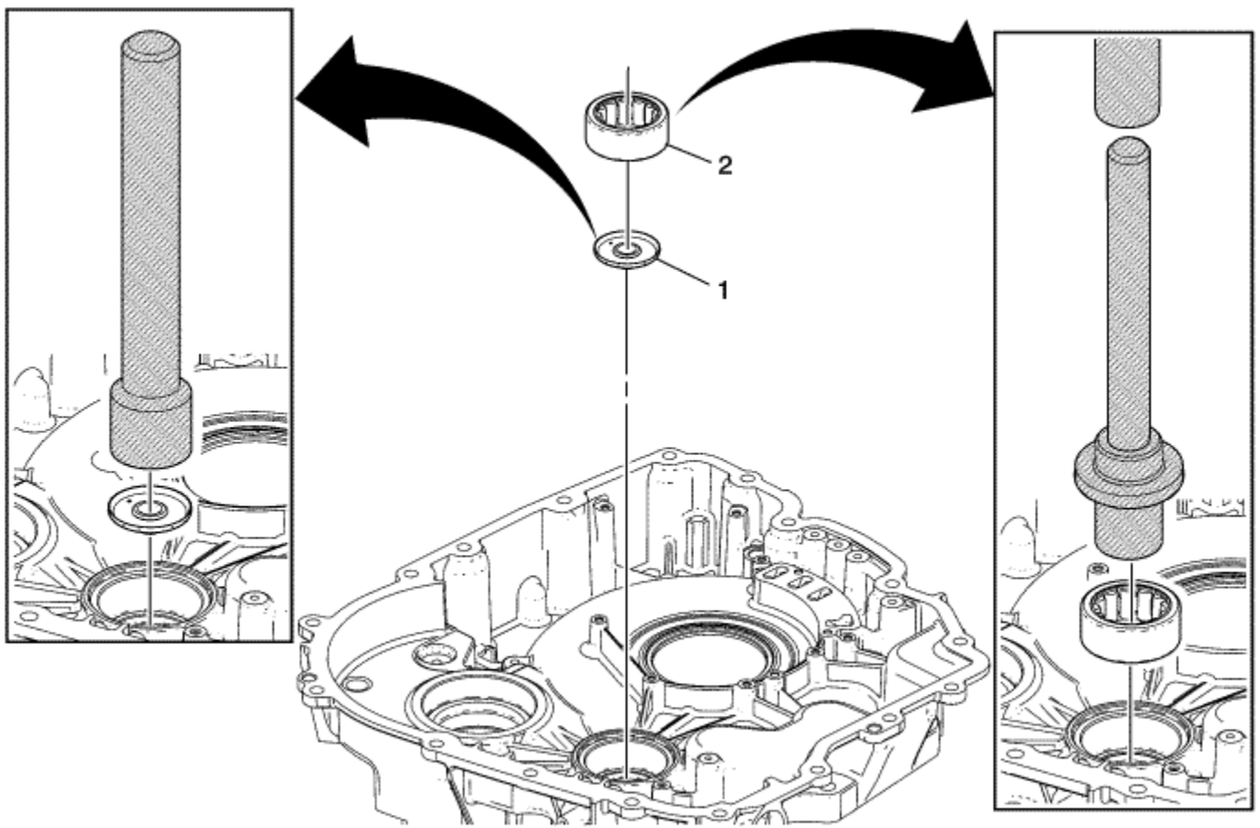

Callout	Component Name
1	Front Differential Drive Pinion Gear Lubricant Dam **Special Tools** • *DT-46630* Lubricant Dam Installer • *GE 8092* Driver Handle or Equivalent

	For equivalent regional tools, refer to Special Tools .
2	Front Differential Drive Pinion Gear Roller Bearing Assembly (Differential Housing) **Tip** Use bearing press to aid installation. **Special Tools** • *DT-49229* Transfer Shaft Bearing Installer • *GE 8092* Driver Handle or Equivalent For equivalent regional tools, refer to Special Tools .

&#169© Copyright Chevrolet. All rights reserved

Front Differential Drive Pinion Gear with Transfer Gear Installation

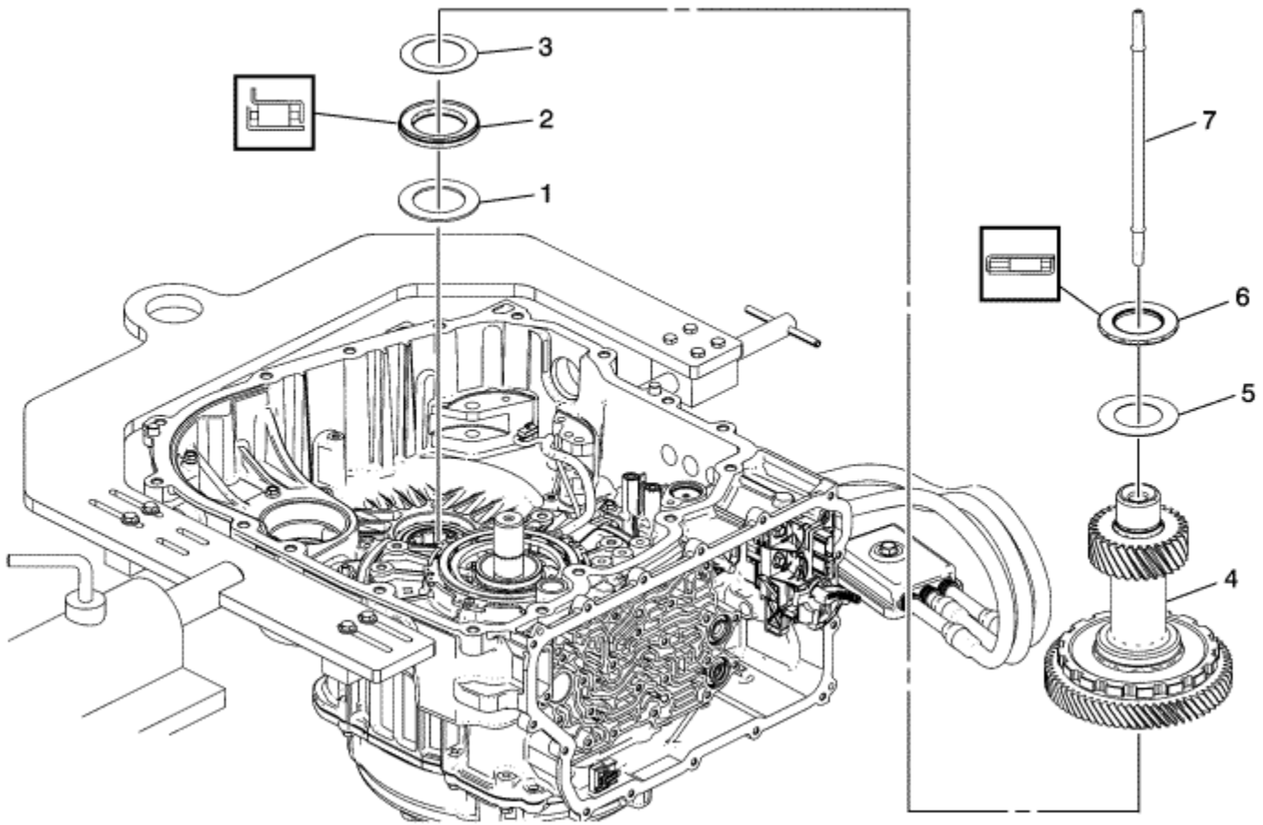

Callout	Component Name
1	Front Differential Bearing Spacer
2	Front Drive Pinion Gear Shaft Thrust Bearing Assembly (LHS)
3	Front Differential Drive Pinion Gear Bearing Thrust Washer Assembly - Selective **Procedure**

	For selective washer procedure refer to Front Differential Drive Pinion Gear Bearing Thrust Washer and Front Differential Bearing Washer Measurement .
4	Front Differential Drive Pinion (w/Transfer Gear) Gear Assembly
5	Front Differential Drive Pinion Gear Bearing Thrust Washer - Selective (RHS) **Procedure** For selective washer procedure refer to Front Differential Drive Pinion Gear Bearing Thrust Washer and Front Differential Bearing Washer Measurement .
6	Front Drive Pinion Gear Shaft Thrust Bearing Assembly - Selective (RHS) **Procedure** For selective bearing procedure refer to Front Differential Drive Pinion Gear Bearing Thrust Washer and Front Differential Bearing Washer Measurement .
7	Front Differential Transfer Drive Gear Fluid Passage Tube Assembly

© Copyright Chevrolet. All rights reserved

Park Pawl and Manual Shift Shaft Installation

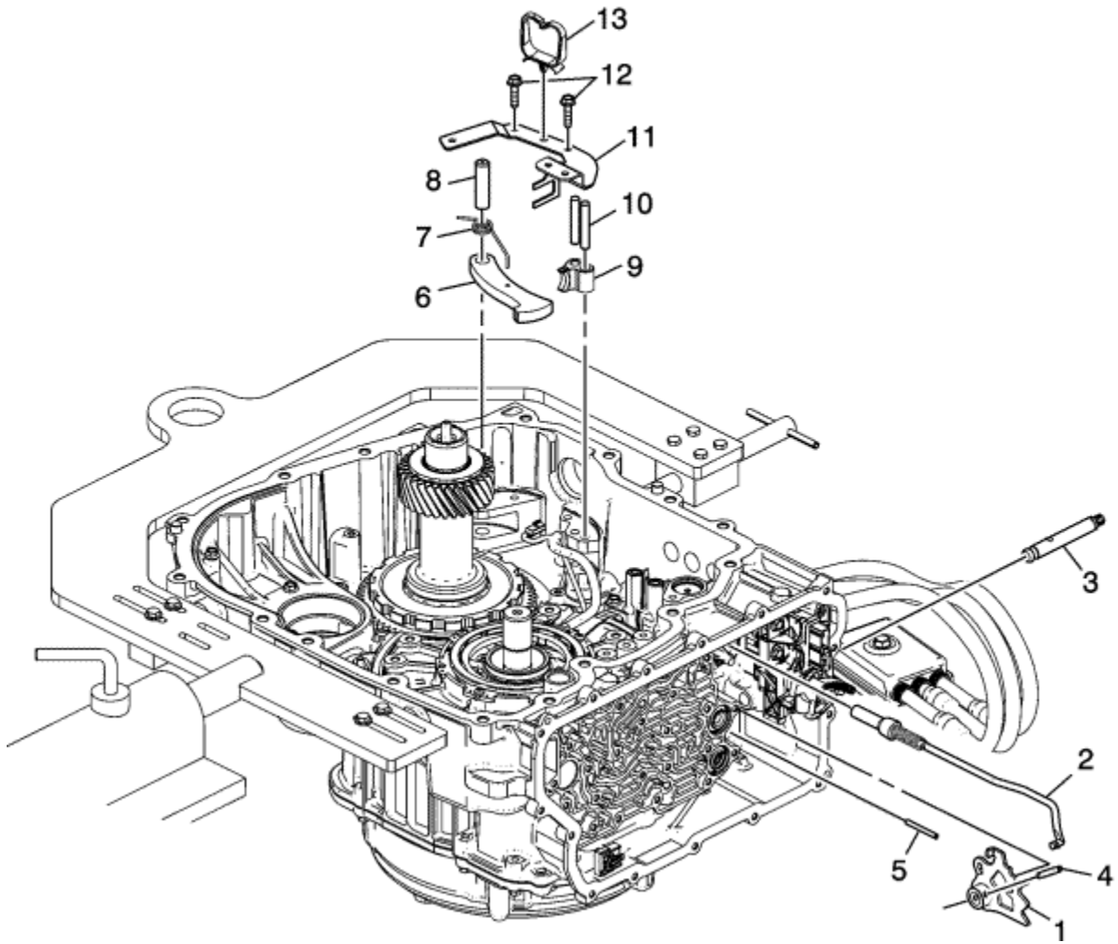

Callout	Component Name
1	Manual Shaft Detent Lever Assembly
2	Park Pawl Actuator Assembly
3	Manual Shift Shaft

4	Manual Shift Shaft Detent Lever Hub Pin
5	Manual Shift Shaft Pin
6	Park Pawl
7	Park Pawl Spring
8	Park Pawl Shaft
9	Park Pawl Actuator Guide
10	Park Pawl Actuator Guide Pin (Qty: 2)
11	Park Pawl Actuator Bracket
12	Park Pawl Actuator Bolt M6 x 20 mm (Qty: 2) **Caution:** Refer to Fastener Caution in the Preface section. **Tighten** 9 N·m (80 lb in)
13	Wiring Harness Conduit Bracket

© Copyright Chevrolet. All rights reserved

Manual Shift Shaft Seal Installation

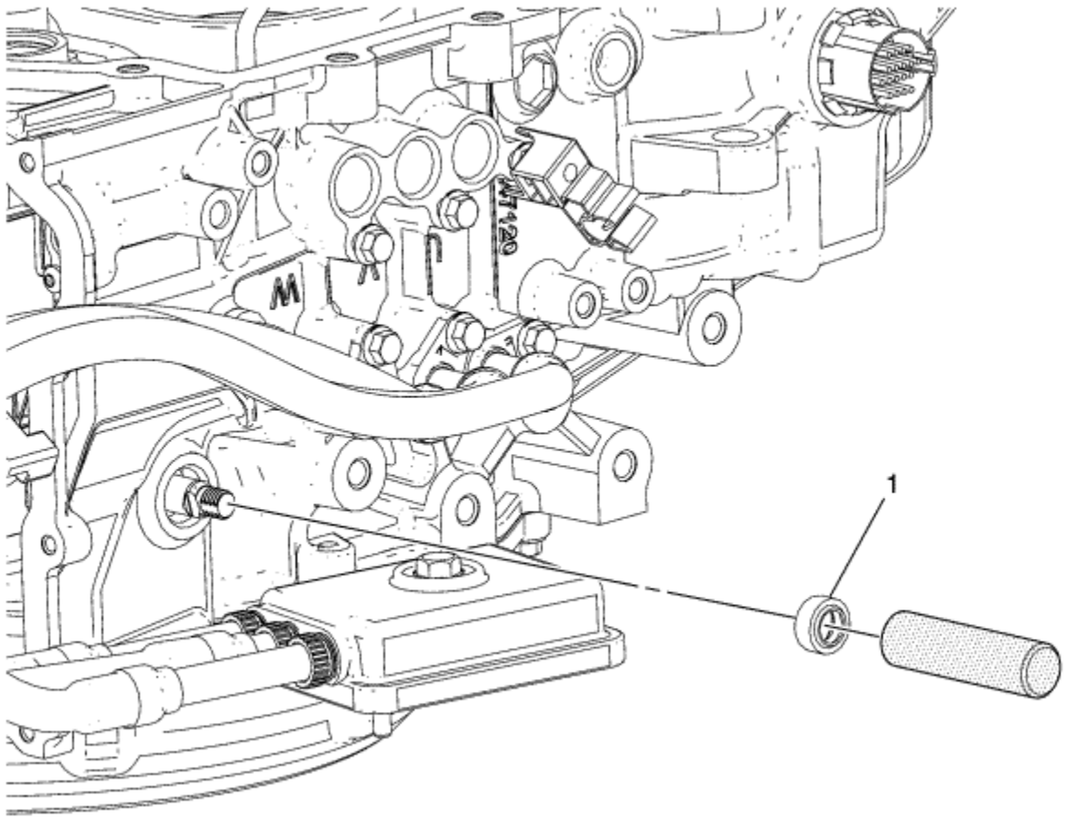

Callout	Component Name
1	Manual Shift Shaft Seal **Special Tools** *DT-49101* Seal Installer

	For equivalent regional tools, refer to Special Tools .

© Copyright Chevrolet. All rights reserved

Automatic Transmission Wiring Harness and Output Speed Sensor Installation

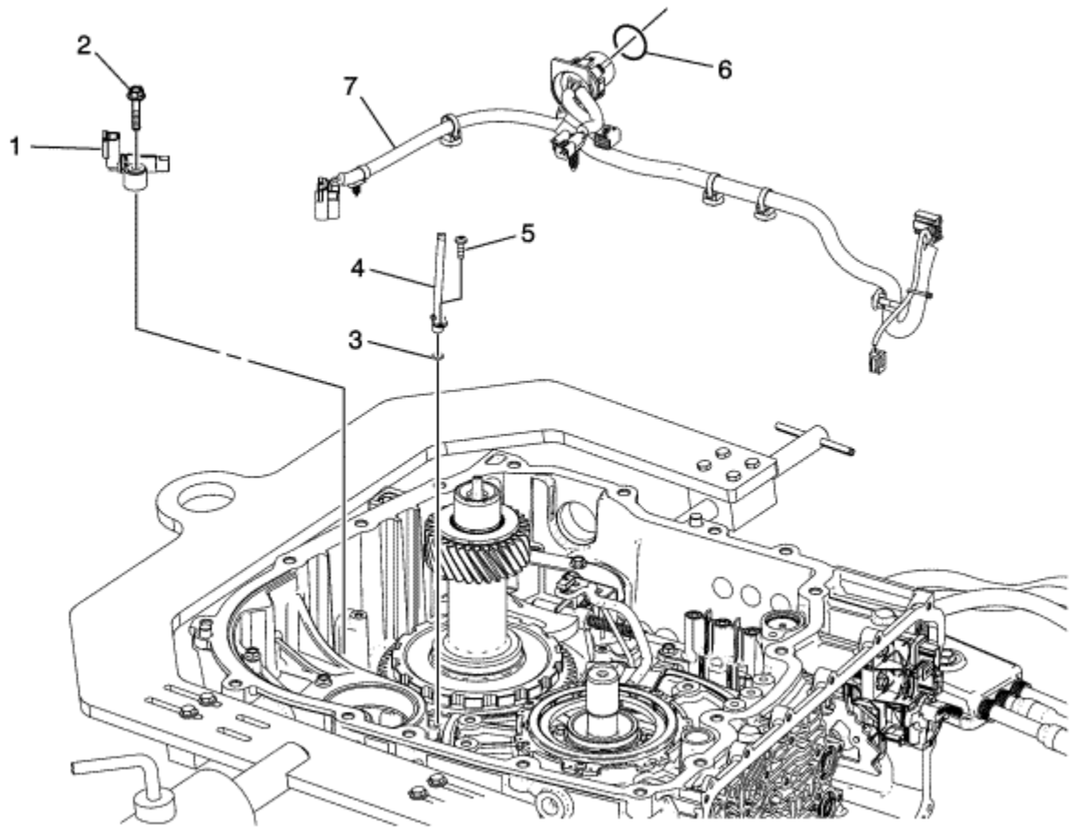

Callout	Component Name
1	A/Trans Output Speed Sensor Assembly
2	A/Trans Output Speed Sensor Bolt M6 x 30 mm (Qty: 1) **Caution:** Use the correct fastener in the correct location. Replacement fasteners must be the correct part number for that application. Fasteners requiring replacement or fasteners requiring the use of thread locking compound or sealant are identified in the service procedure. Do not use paints, lubricants, or corrosion inhibitors on fasteners or fastener joint surfaces unless specified. These coatings affect fastener torque and joint clamping force and may damage the fastener. Use

	the correct tightening sequence and specifications when installing fasteners in order to avoid damage to parts and systems. **Tighten** 9 N·m (80 lb in)
3	Front Differential Carrier Lubricant Pipe Seal **Tip** Install a NEW seal. It is not reusable.
4	Front Differential Carrier Lubricant Pipe
5	Front Differential Carrier Lubricant Pipe Bolt M5 x 16 mm (Qty: 1) **Tip** Install a NEW seal. It is not reusable. **Tighten** 7.25 N·m (64.2 lb in)
6	Wiring Connector Seal
7	A/Trans Wiring Harness Assembly

© Copyright Chevrolet. All rights reserved

Drive Motor Generator Rotor and Stator Installation - Unit A

Table 1: Drive Motor Generator Stator Cooling Tubes Replacement
Table 2: Rotor and Stator Installation

Drive Motor Generator Stator Cooling Tubes Replacement

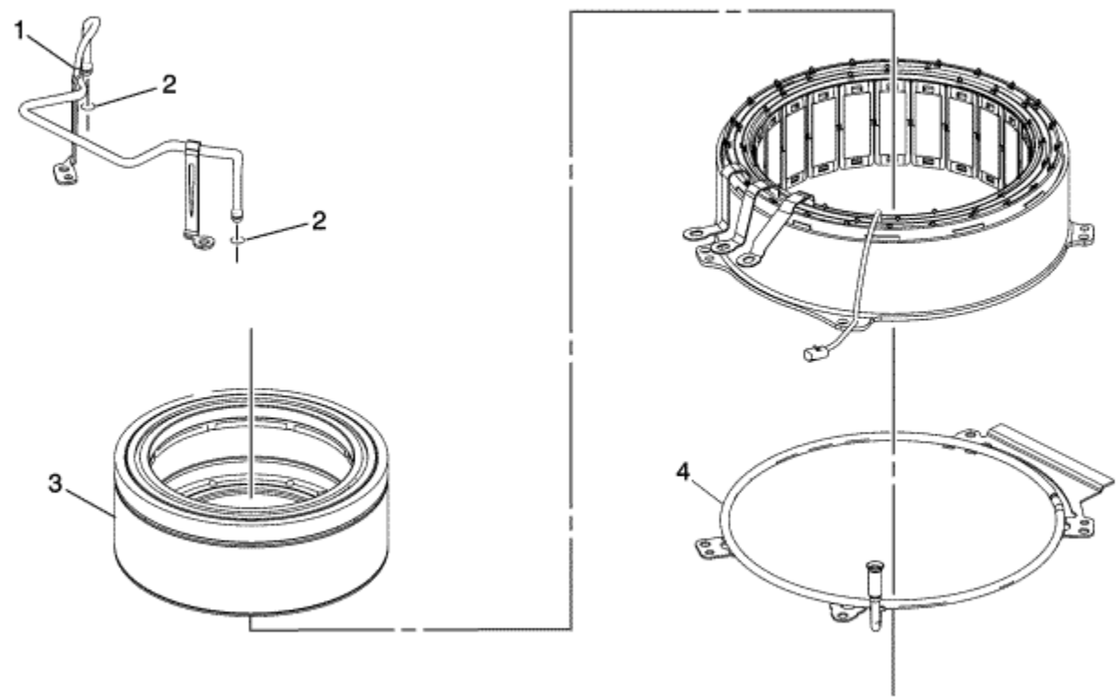

Drive Motor Generator Stator Cooling Tubes Replacement

Callout	Component Name
1	Generator/Drive Motor Stator Cooling Tube Assembly (RHS) - Unit A
2	Drive Motor/Generator Stator Cooling Tube Seal (Qty: 2) **Tip** Install a NEW seal. It is not reusable.
3	Generator/Drive Motor Rotor Assembly - Unit A
4	Generator/Drive Motor Stator Cooling Tube Assembly (LHS) - Unit A

Rotor and Stator Installation

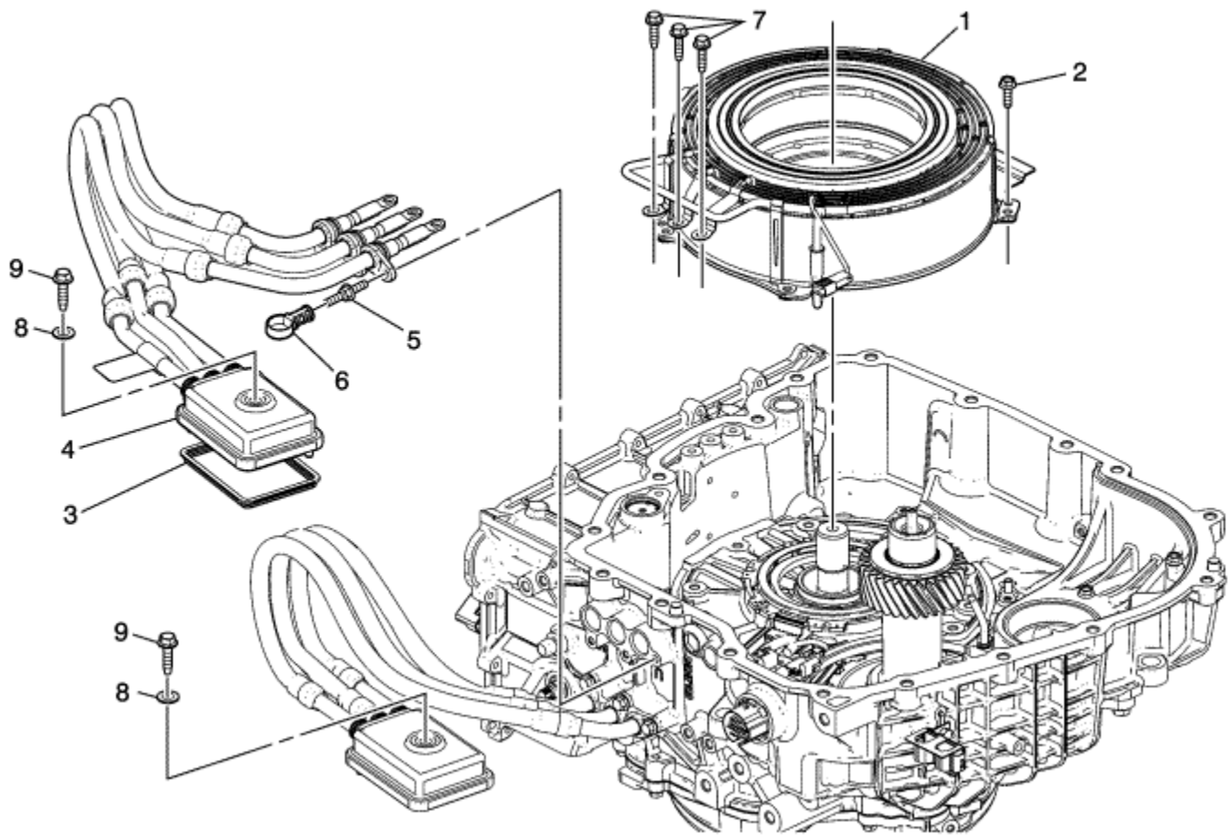

Rotor and Stator Installation

Callout	Component Name
1	Generator/Drive Motor Rotor and Stator Assembly - Unit A **Warning:** The generator motor weighs approximately 23 kg (50 lbs). Personal injury may result if you lift the generator motor improperly. **Tip** Attach the temperature sensor connector.
2	Drive Motor/Generator Stator Bolt M6 x 20 mm (Qty: 4) **Caution:** Refer to Fastener Caution in the Preface section. **Tighten** 9 N·m (80 lb in)
3	Drive Motor/Generator Power Inverter Module Cable Housing Cover Seal **Tip** Install a NEW seal, it is not reusable.
4	Drive Motor/Generator Power Inverter Module Cable Assembly - 3 Phase - A
5	Drive Motor/Generator Power Inverter Module Cable Stud M6 x 20 mm (Qty: 3) - External **Tighten** 9 N·m (80 lb in)
6	Auxiliary Pump Motor Cable Retainer - 3 Phase - Cable A/3-PH Motor
7	Drive Motor/Generator Power Inverter Module Cable Connector Bolt M6 x 25 mm (Qty: 3) - Internal **Tighten** 9 N·m (80 lb in)
8	Drive Motor Power Inverter Module Cable Connector Bolt Seal (Qty: 2) **Tip** Install a NEW seal, it is not reusable.
9	High Voltage Cover to Controller Retaining Bolt

© Copyright Chevrolet. All rights reserved

Input Clutch Hub and Shaft Installation

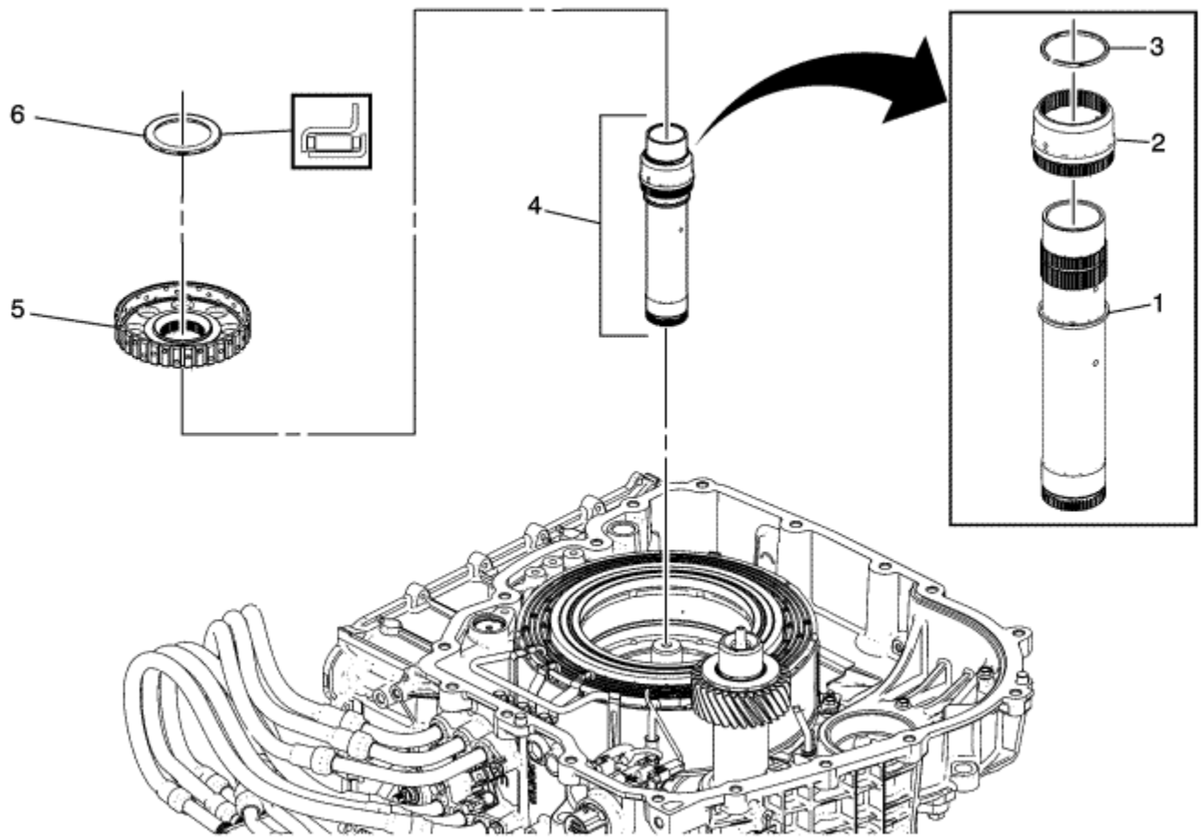

Callout	Component Name
1	Input Clutch Hub Shaft
2	Generator/Drive Motor Rotor Hub Shaft
3	Input Shaft Retainer
4	Input Clutch Hub Shaft Assembly
5	Input Clutch Hub

6	Input Carrier Thrust Bearing Assembly

© Copyright Chevrolet. All rights reserved

1-3-Reverse Clutch Disassemble

Table 1: 1-3 Reverse Clutch (w/Input Shaft) Housing Disassemble
Table 2: 1-3 Reverse Clutch Piston and Spring Disassemble

1-3 Reverse Clutch (w/Input Shaft) Housing Disassemble

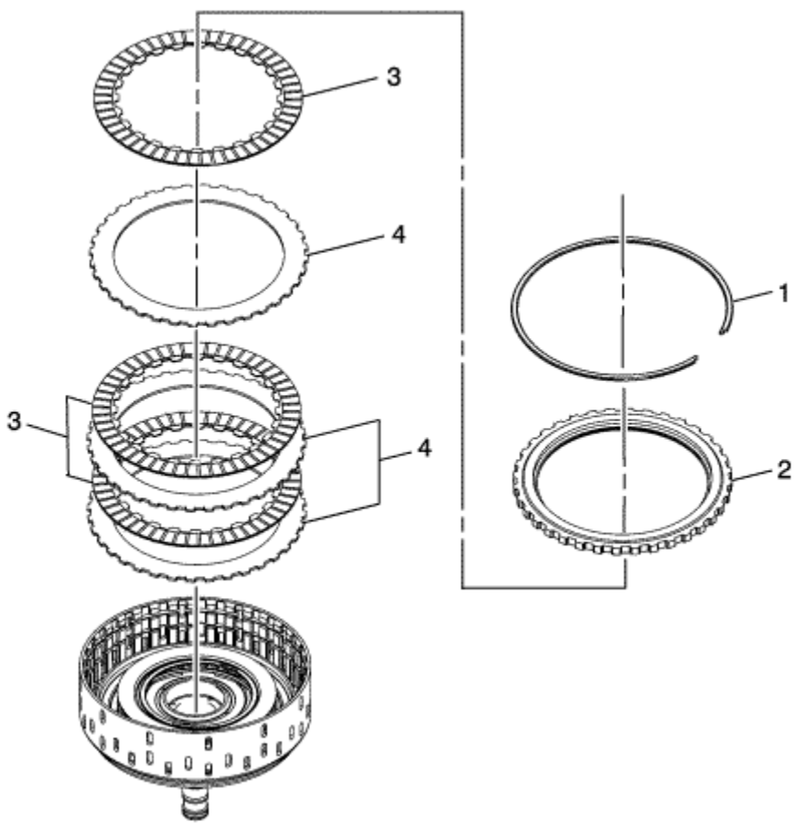

1-3 Reverse Clutch (w/Input Shaft) Housing Disassemble

Callout	Component Name
1	1-3 Reverse Clutch Backing Plate Retaining Ring - Selective **Tip** Discard this retaining ring. It is not reusable.
2	1-3 Reverse Clutch Backing Plate
3	1-3 Reverse Clutch Plate Assembly - Friction (Qty: 3)
4	1-3 Reverse Clutch Plate (Qty: 3)

1-3 Reverse Clutch Piston and Spring Disassemble

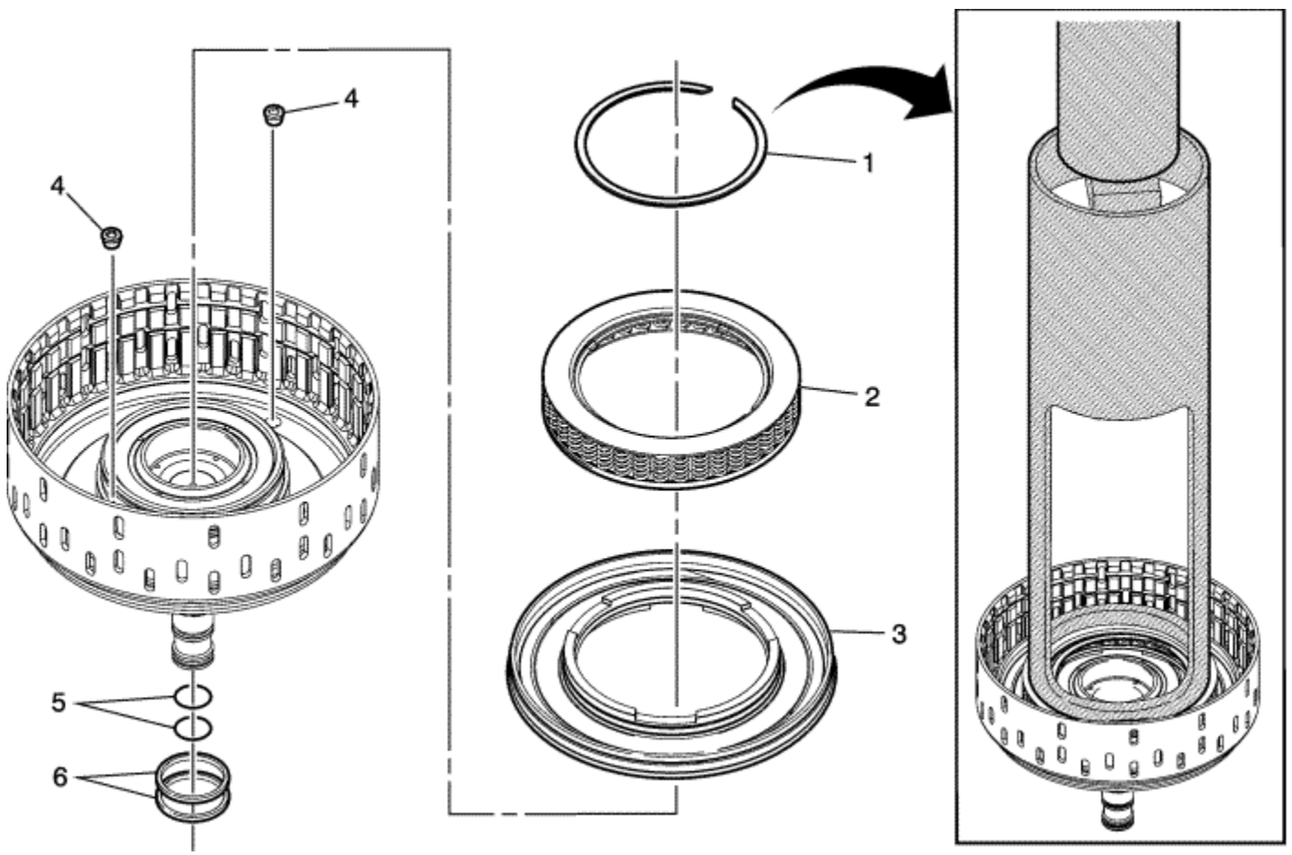

1-3 Reverse Clutch Piston and Spring Disassemble

Callout	Component Name
1	1-3 Reverse Clutch Spring Retaining Ring **Tip** Discard this retaining ring. It is not reusable. **Special Tools** *DT-47693-2* Compressor For equivalent regional tools, refer to Special Tools .
2	1-3 Reverse Clutch Spring
3	1-3 Reverse Clutch Piston
4	1-3 Reverse Clutch Housing Ball Valve
5	Input Shaft Seals (Qty: 2) **Tip** Discard seals, they are not reusable.
6	Turbine Shaft Fluid Seal Ring (Qty: 2) **Tip** Discard seals, they are not reusable.

© Copyright Chevrolet. All rights reserved

Input Shaft Seal Replacement

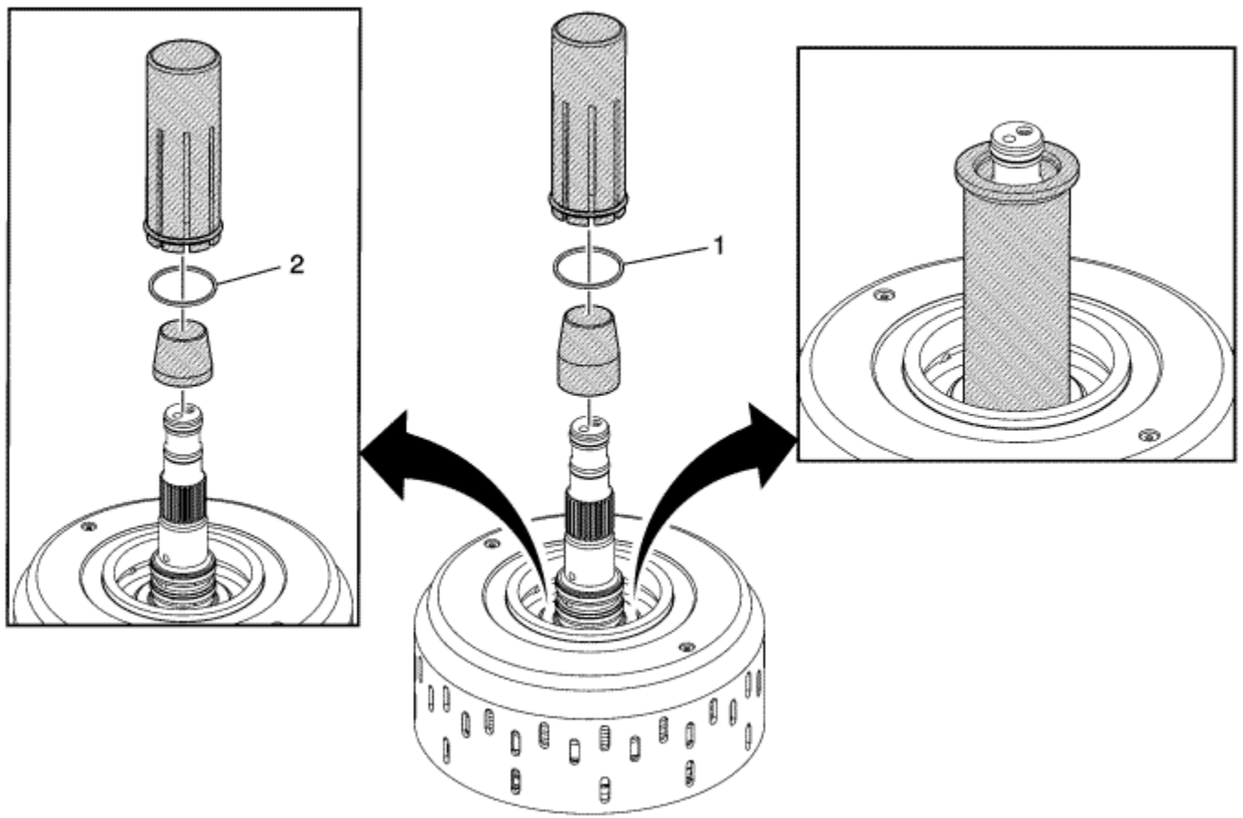

Callout	Component Name
1	Turbine Shaft Fluid Seal Ring (Qty: 1) **Procedure** 1. Install a NEW seal. It is not reusable. 2. Use DT-49261-1 protector and -4 pusher to install the first lower seal.

	Special Tools *DT-49261* Input Shaft Seal Installer For equivalent regional tools, refer to Special Tools .
2	Turbine Shaft Fluid Seal Ring (Qty: 1) **Procedure** 1. Install a NEW seal. It is not reusable. 2. Use DT-49261-2 protector and -4 pusher to install the second upper seal. 3. Size both seals for at least 15 minutes. **Special Tools** *DT-49261* Input Shaft Seal Installer For equivalent regional tools, refer to Special Tools .

© Copyright Chevrolet. All rights reserved

1-3-Reverse Clutch Assemble

Table 1: 1-3 Reverse Clutch Piston and Spring Assemble
Table 2: 1-3 Reverse Clutch Assemble

1-3 Reverse Clutch Piston and Spring Assemble

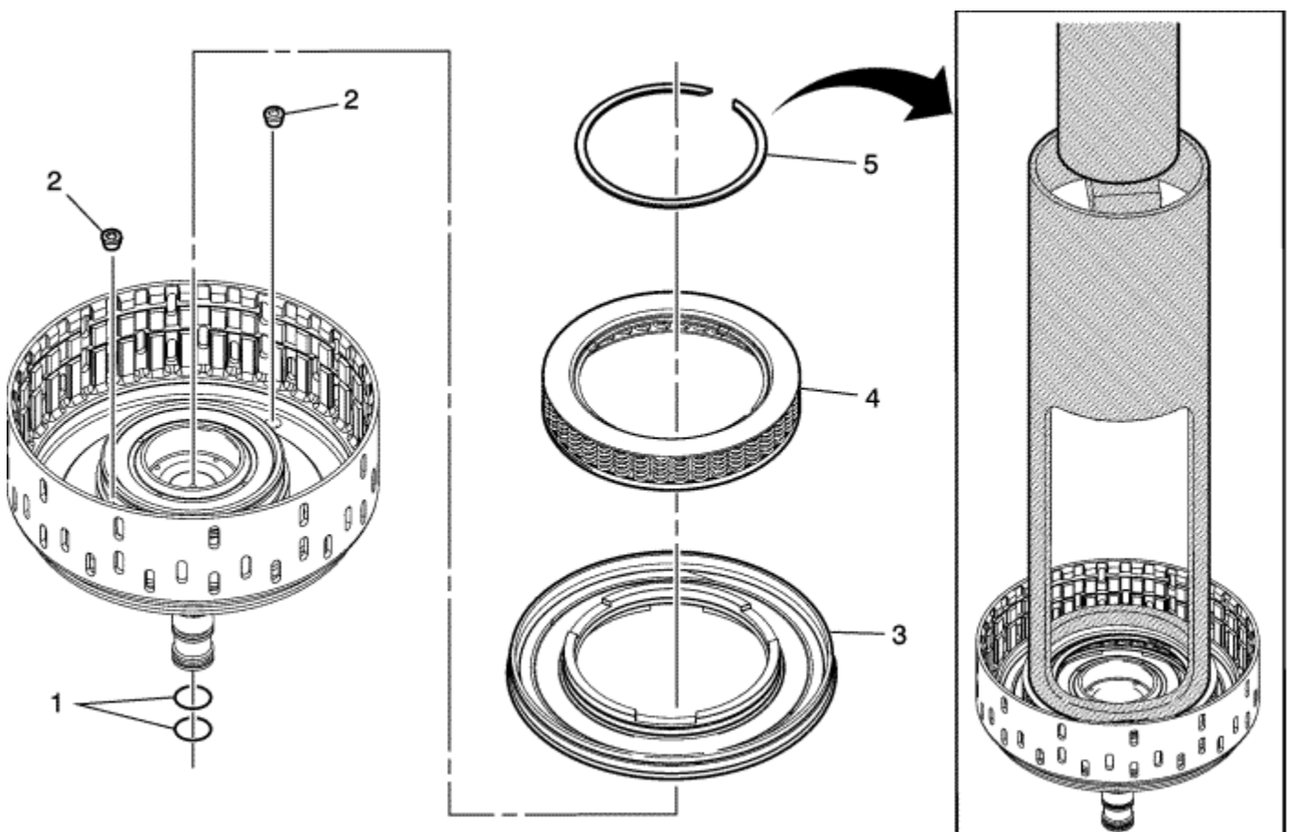

1-3 Reverse Clutch Piston and Spring Assemble

Callout	Component Name
1	Input Shaft Seals (Qty: 2) **Tip** Install NEW seals. They are not reusable.
2	1-3 Reverse Clutch Housing Ball Valve
3	1-3 Reverse Clutch Piston
4	1-3 Reverse Clutch Spring
5	1-3 Reverse Clutch Spring Retaining Ring **Tip** Install a NEW retaining ring. It is not reusable. **Special Tools** *DT-47693-2* Compressor For equivalent regional tools, refer to Special Tools .

1-3 Reverse Clutch Assemble

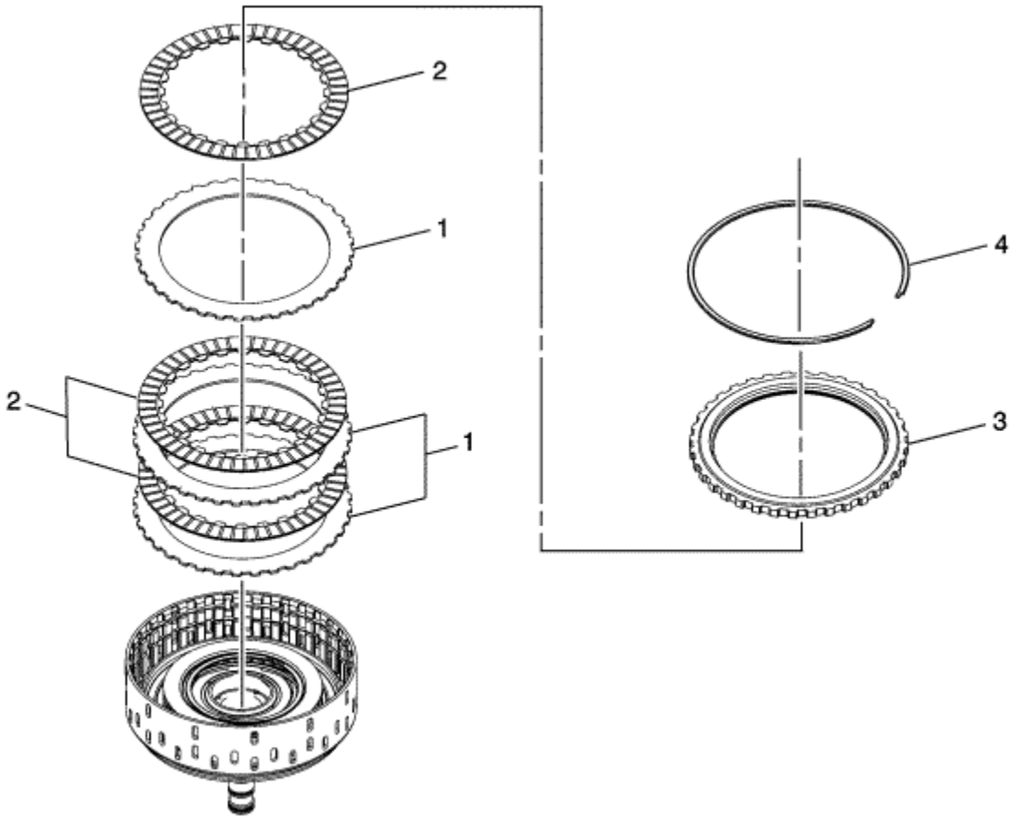

1-3 Reverse Clutch Assemble

Callout	Component Name
1	1-3 Reverse Clutch Plate (Qty: 3)
2	1-3 Reverse Clutch Plate Assembly - Friction (Qty: 3)
3	1-3 Reverse Clutch Backing Plate
4	1-3 Reverse Clutch Backing Plate Retaining Ring - Selective **Tip** Install a NEW retaining ring. It is not reusable.

© Copyright Chevrolet. All rights reserved

1-3-Reverse Clutch Piston Air Check

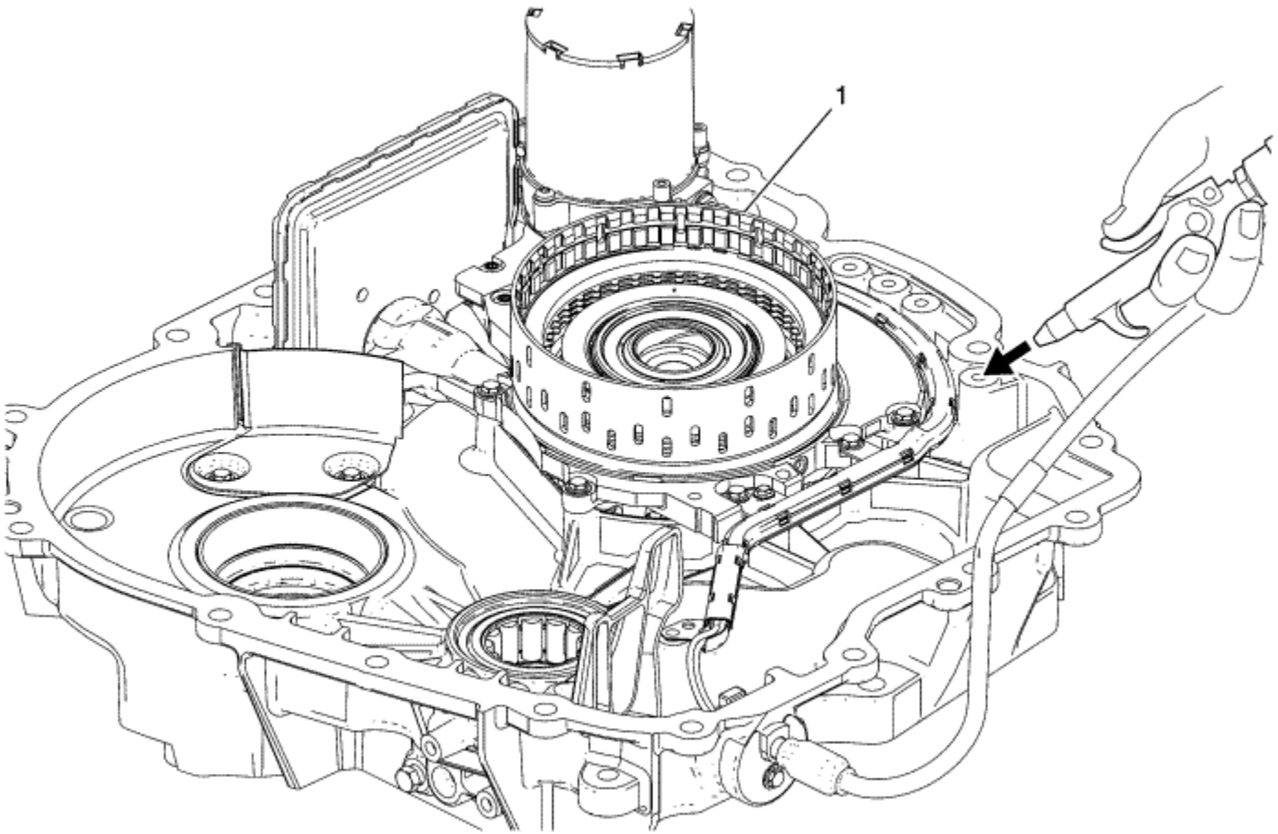

Callout	Component Name
Procedure Apply shop air to the 1-3 Reverse Clutch. Observe the piston movement.	
	1-3 Reverse Clutch Assembly **Caution:** Regulate the air pressure to 40 psi maximum. High pressure could cause the piston to over travel and damage the piston seals.

1	**Tip** Minimal piston movement and excessive air leaking could indicate damage to the seals or improper assembly.

© Copyright Chevrolet. All rights reserved

1-3-Reverse Clutch Installation

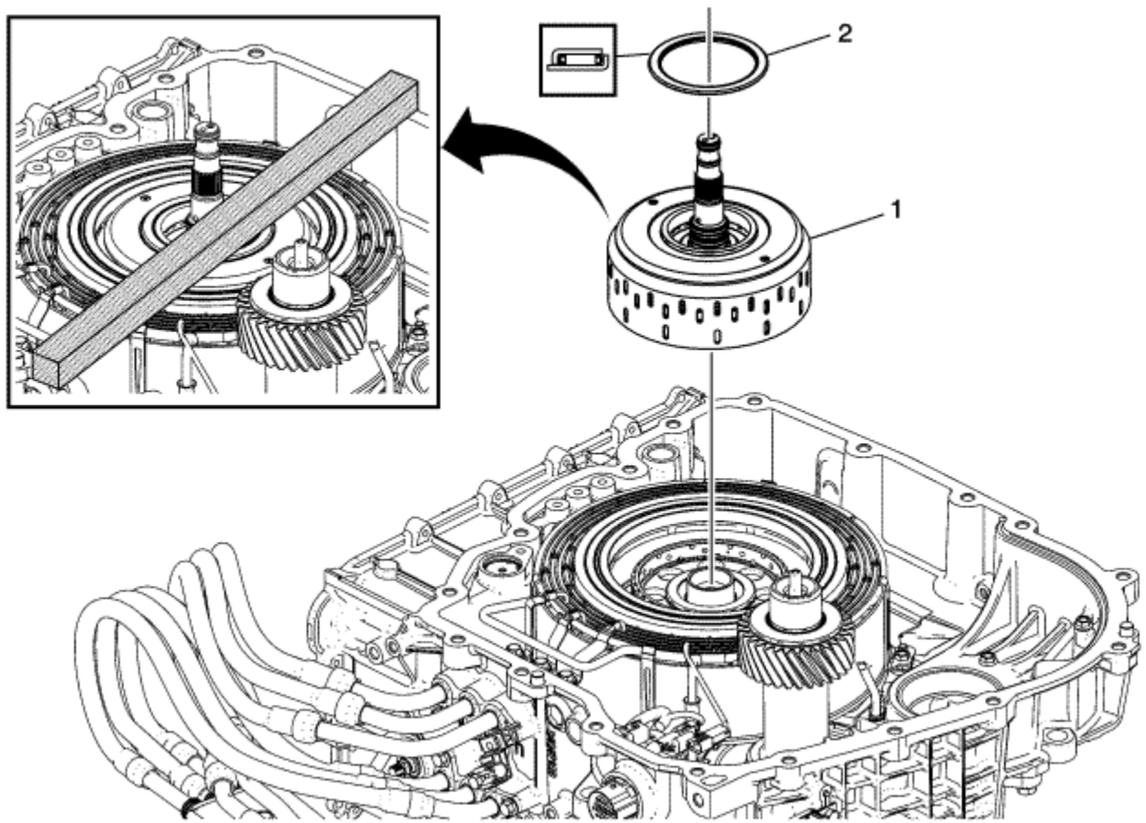

Callout	Component Name
1	1-3 Reverse Clutch Assembly **Tip** When fully seated the clutch assembly will be flush with the case sealing surface, verify by using a flat bar. **Special Tool**

	GE 34673 Flat Gauge Bar For equivalent regional tools, refer to Special Tools .
2	1-3 Reverse Clutch Thrust Bearing Assembly

© Copyright Chevrolet. All rights reserved

Front Differential Carrier Installation

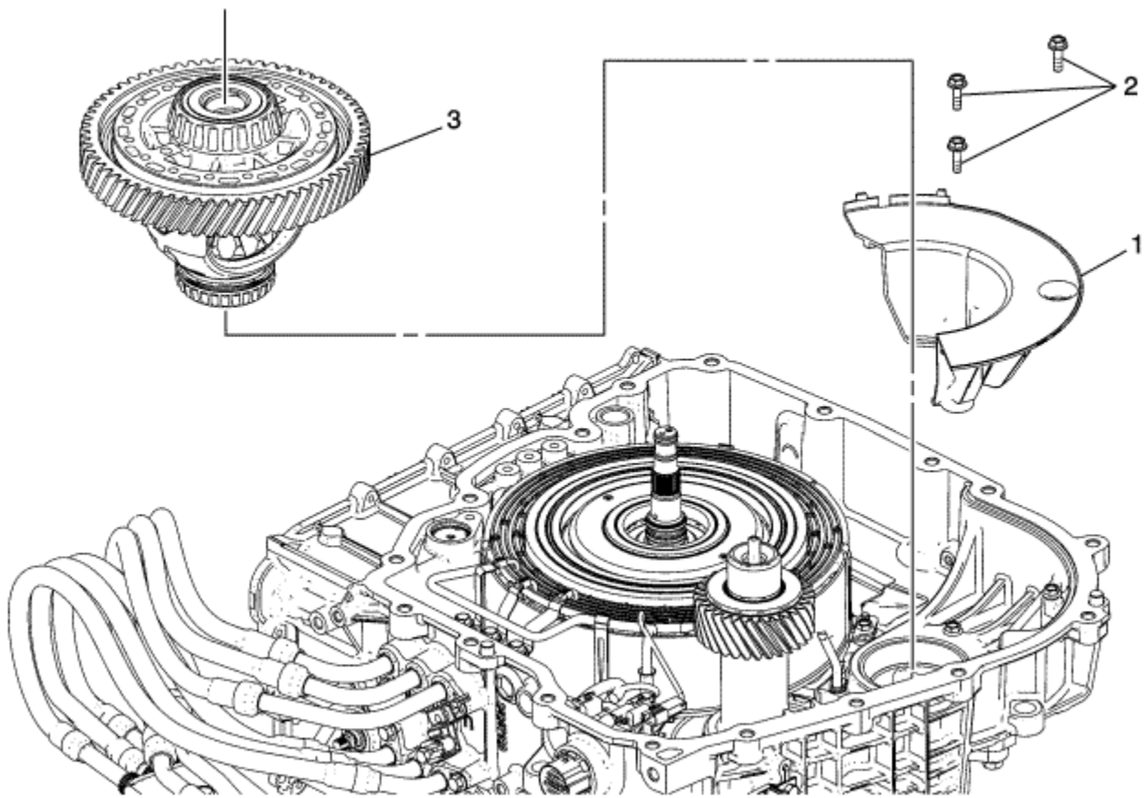

Callout	Component Name
1	Front Differential Carrier Baffle (Case) **Tip** Before installation, inspect the debris collection magnet that is located on the underside of the baffle.
	Front Differential Carrier Baffle Bolt M6 x 20 mm (Qty: 3)

2	**Caution:** Use the correct fastener in the correct location. Replacement fasteners must be the correct part number for that application. Fasteners requiring replacement or fasteners requiring the use of thread locking compound or sealant are identified in the service procedure. Do not use paints, lubricants, or corrosion inhibitors on fasteners or fastener joint surfaces unless specified. These coatings affect fastener torque and joint clamping force and may damage the fastener. Use the correct tightening sequence and specifications when installing fasteners in order to avoid damage to parts and systems. **Tighten** 9 N·m (80 lb in)
3	Front Differential Carrier Assembly (FWD)

© Copyright Chevrolet. All rights reserved

Torque Damper and Differential Housing with Fluid Pump Installation

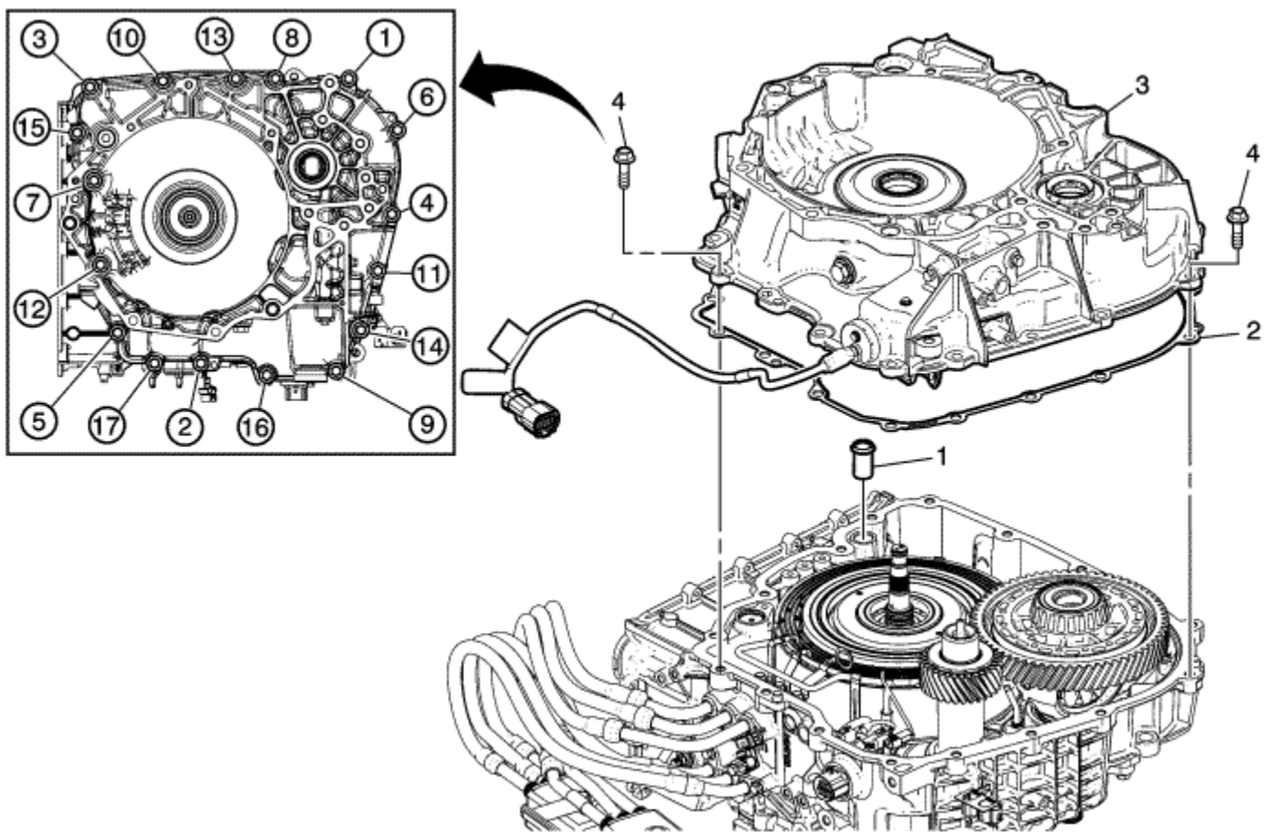

Callout	Component Name
1	A/Trans Pump Fluid Outlet Seal Assembly
2	Torque Damper Housing Outer Seal
3	Torque Damper and Differential (w/Fluid Pump) Housing Assembly
	Torque Damper and Differential Housing Bolt M10 x 35 mm (Qty: 17) **Caution:** Refer to Fastener Caution in the Preface section.

4	**Procedure** Tighten the bolts in sequence shown. **Tighten** 65 N·m (47.9 lb ft)

© Copyright Chevrolet. All rights reserved

Front Differential Carrier Final Rotational Torque Measurement

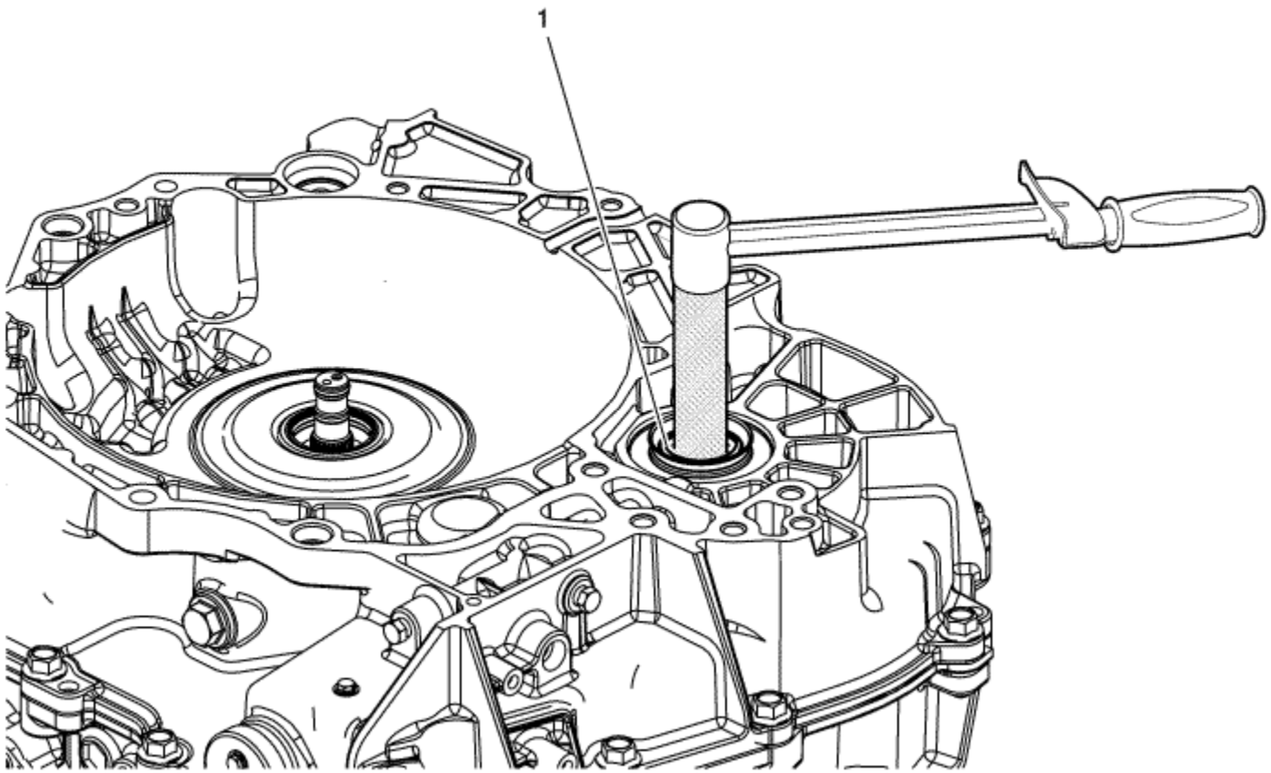

Callout	Component Name
	Front Differential Carrier Assembly **Caution:** Low bearing pre-load will cause premature failure of the front differential drive pinion gear. **Procedure**

1	1. Use a dial or beam torque wrench with *DT-47793* rotating tool to measure turning torque. 2. If the turning torque is not within specifications, the transfer gear assembly and differential bearing thrust washer is incorrect and must be corrected. Refer to Front Differential Drive Pinion Gear Bearing Thrust Washer and Front Differential Bearing Washer Measurement . **Rotational Torque** 14-22 N·m (10-16 lb ft) **Special Tools** *DT-47793* Differential Rotating Tool For equivalent regional tools, refer to Special Tools .

© Copyright Chevrolet. All rights reserved

Output Shaft Installation

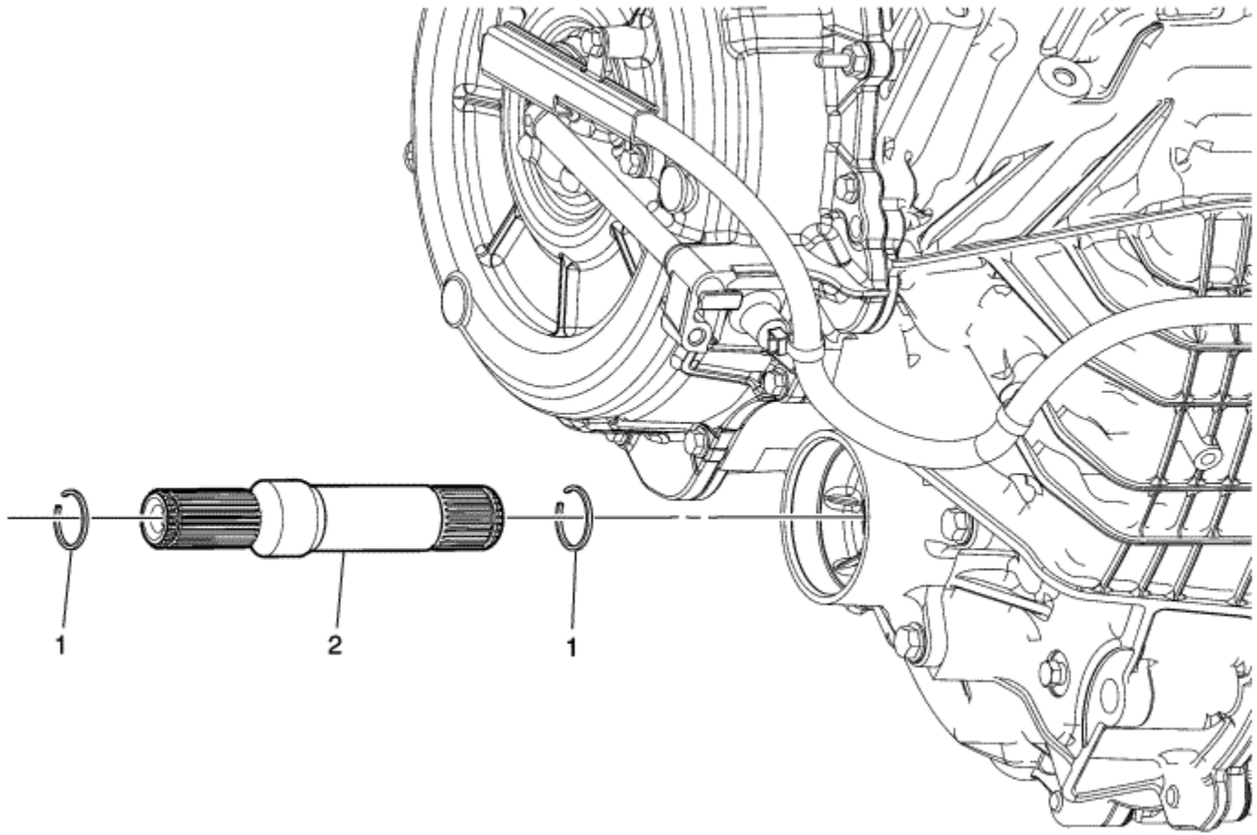

Callout	Component Name
1	Front Wheel Drive Shaft Retaining Ring **Tip** Install NEW retaining rings. They are not reusable.
2	Output Shaft Assembly

© Copyright Chevrolet. All rights reserved

Front Wheel Drive Shaft Seal Installation - Case Side

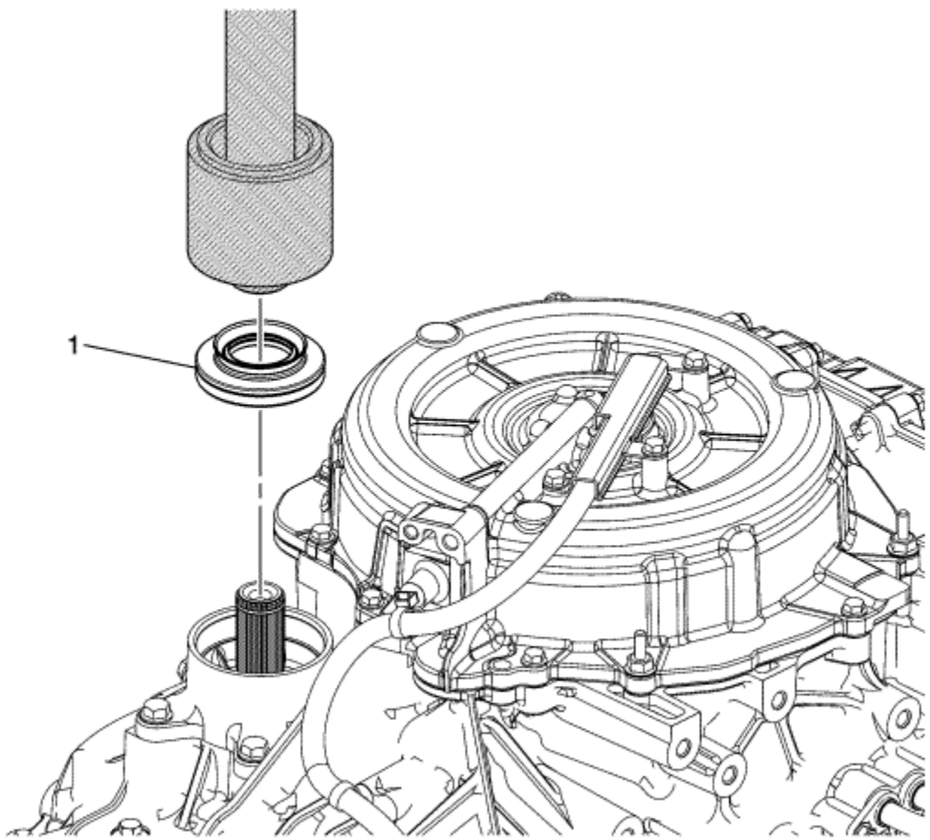

Callout	Component Name
1	Front Wheel Drive Shaft Oil Seal Assembly (LHS) **Special Tools** • *DT 50301* Seal and Bearing Installer • *GE 8092* Driver Handle

	For equivalent regional tools, refer to Special Tools .

&#169© Copyright Chevrolet. All rights reserved

Control Valve Body Assembly Disassemble

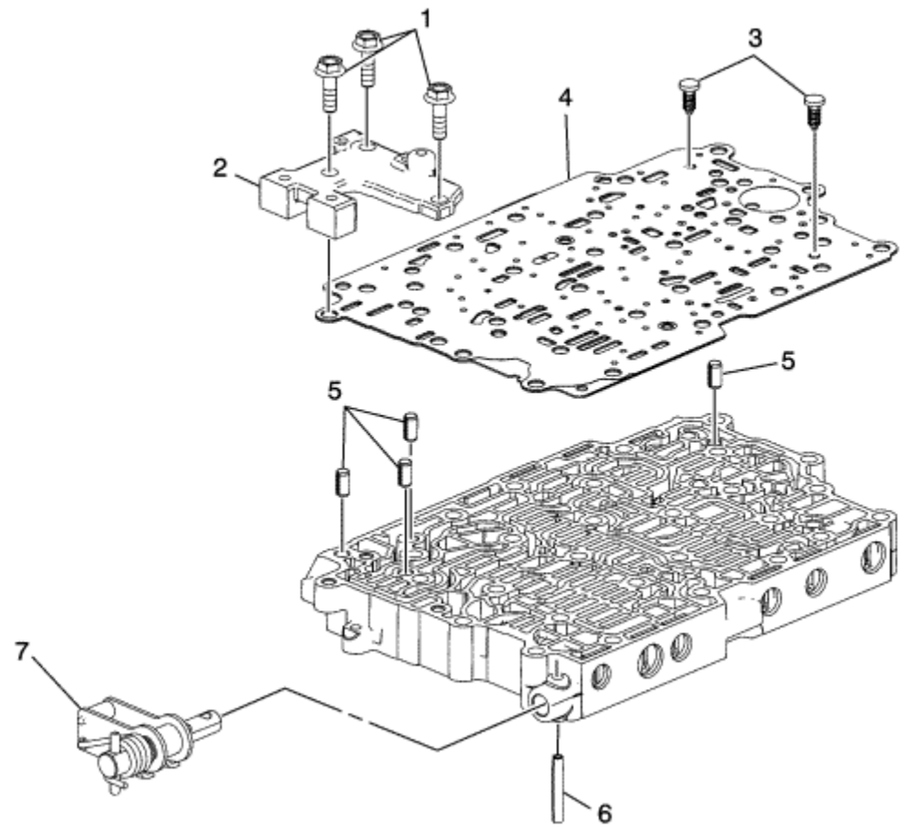

Callout	Component Name
1	Control Valve Channel Plate Bolt M6 x 20 mm (Qty: 3)
2	A/Trans Manual Shift Shaft Position Switch Mounting Bracket Assembly
3	Control Valve Body Spacer Retainer (Qty: 2)
4	Control Valve Body Spacer (w/Gasket) Plate Assembly
5	Control Valve Body Locator Pin (Qty: 4)

6	Manual Shift Shaft Detent Spring Retaining Pin
7	Manual Shift Shaft Detent Assembly

© Copyright Chevrolet. All rights reserved

Control Valve Body Cleaning and Inspection

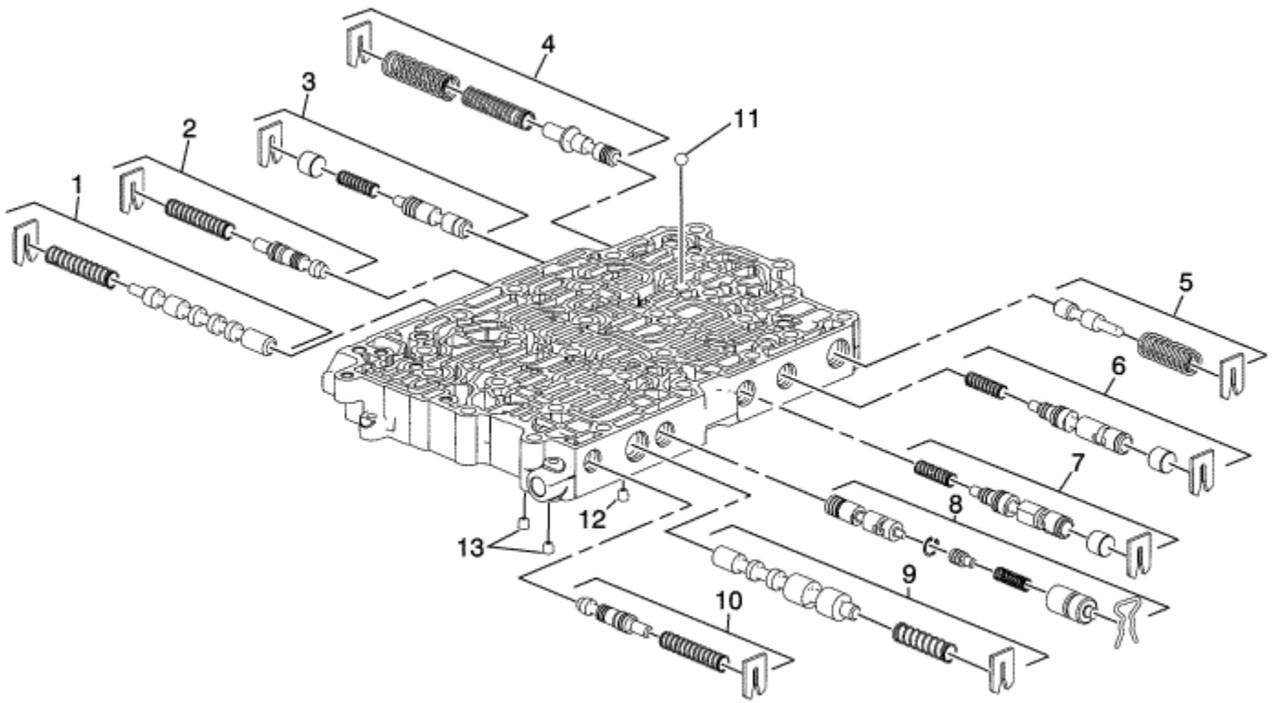

Callout	Component Name
Warning: Valve springs can be tightly compressed. Use care when removing retainers and plugs. Personal injury could result. **Caution:** After cleaning the transmission components, allow to air dry. Do not use cloth or paper towels in order to dry any transmission components. Lint from the towels can cause component failure. **Caution:** Do not reuse cleaning solvents. Previously used solvents may deposit sediment which may damage the component.	

Preliminary Procedure

Clean and inspect all valve components and the valve body. The control valve body assembly is only replaceable as an assembly.

1	Shift Solenoid Valve Train
2	Variable Hi and 2-3-4 Clutch and Drive Motor/Generator Stator Cooling Regulator Boost Valve Train
3	A/Trans Torque Damper Bypass Clutch Valve Train
4	Actuator Feed Limit Valve Train
5	Cooler Feed Limit Valve Train
6	1-3 Reverse Clutch and Generator/Drive Motor Stator Cooling Regulator Valve Train
7	Variable Hi and 2-3-4 Clutch and Drive Motor/Generator Stator Cooling Regulator Valve Train
8	Variable Low and 1-2 Reverse and 4th Clutch and Drive Motor/Generator Stator Cooling Regulator Valve Train
9	Shift Solenoid Valve Train
10	1-2 Reverse and 4th Clutch Regulator Boost Valve Train
11	Control Valve Body Ball Check Valve
12	Modulated Fluid Pressure Orifice
13	Modulated Fluid Pressure Orifice

© Copyright Chevrolet. All rights reserved

Control Valve Body Assembly Assemble

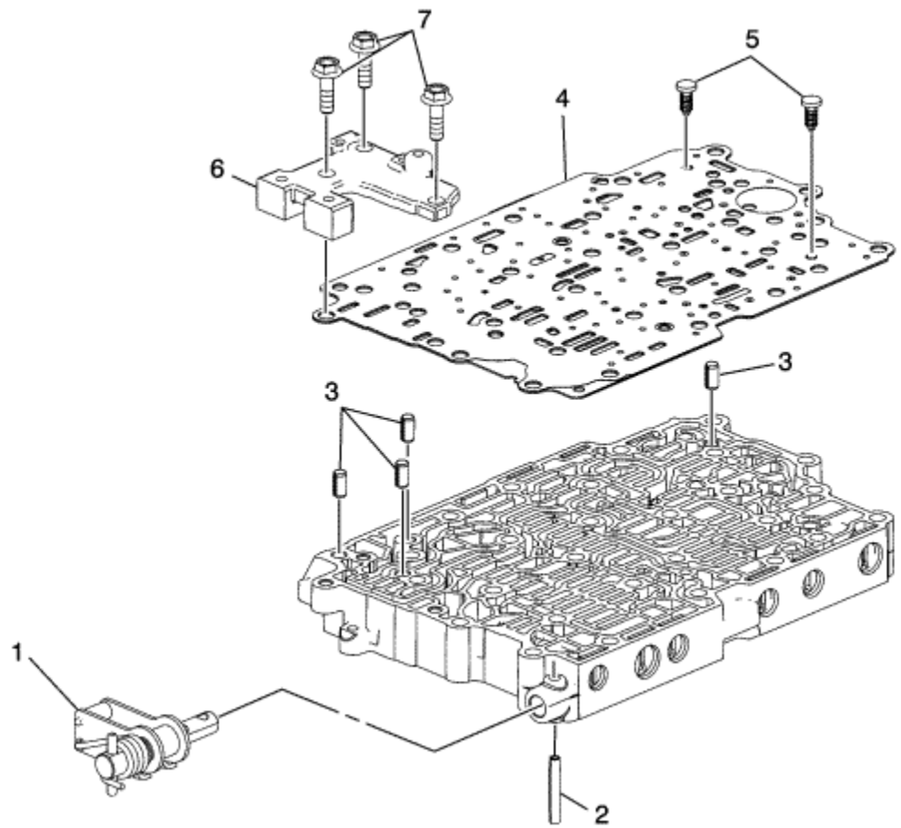

Callout	Component Name
Preliminary Procedure Clean and Inspect all parts for damage or wear.	
1	Manual Shift Shaft Detent Assembly
2	Manual Shift Shaft Detent Spring Retaining Pin

3	Control Valve Body Locator Pin (Qty: 4)
4	Control Valve Body Spacer (w/Gasket) Plate Assembly
5	Control Valve Body Spacer Retainer (Qty: 2)
6	A/Trans Manual Shift Shaft Position Switch Mounting Bracket Assembly
7	Control Valve Channel Plate Bolt M6 x 20 mm (Qty: 3) **Caution:** Use the correct fastener in the correct location. Replacement fasteners must be the correct part number for that application. Fasteners requiring replacement or fasteners requiring the use of thread locking compound or sealant are identified in the service procedure. Do not use paints, lubricants, or corrosion inhibitors on fasteners or fastener joint surfaces unless specified. These coatings affect fastener torque and joint clamping force and may damage the fastener. Use the correct tightening sequence and specifications when installing fasteners in order to avoid damage to parts and systems. **Tighten** 9 N·m (80 lb in)

© Copyright Chevrolet. All rights reserved

Control Valve Body and Channel Plate Installation

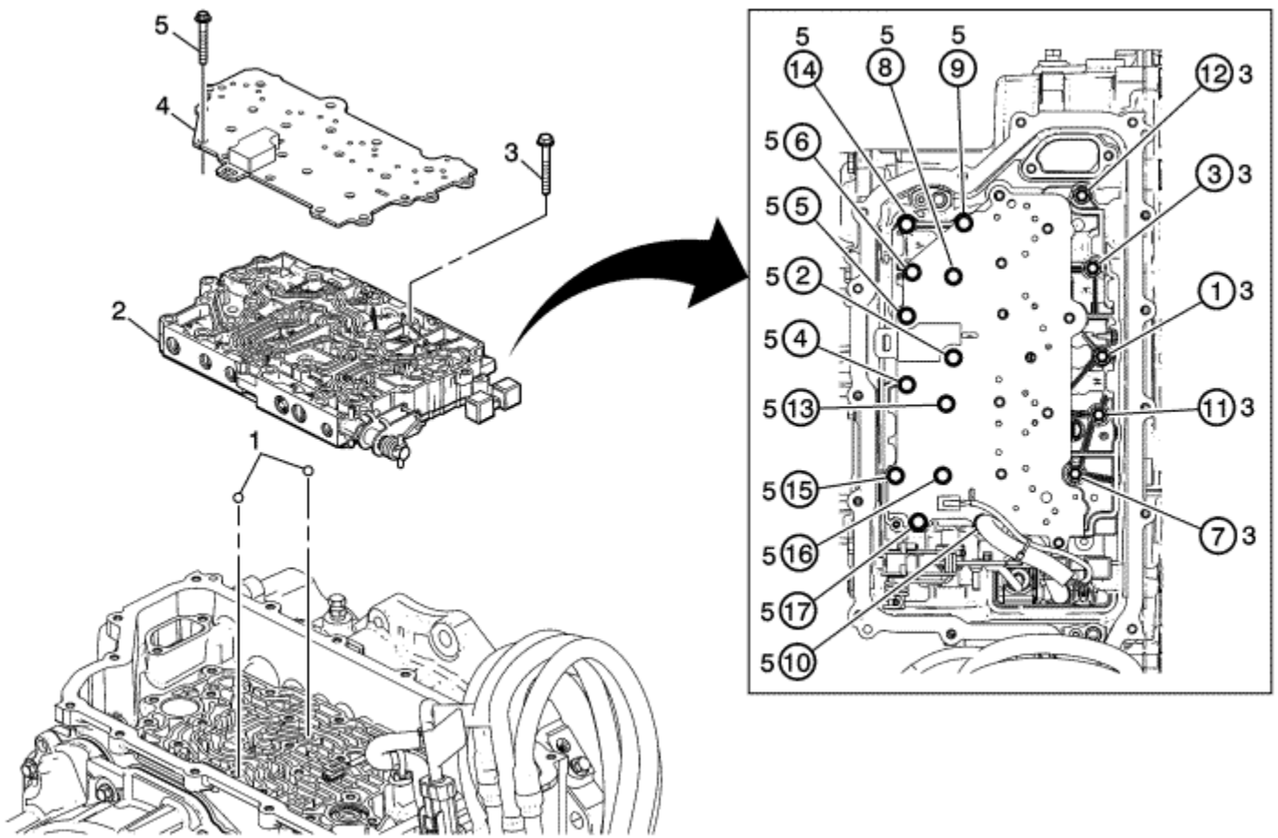

Callout	Component Name
1	Control Valve Body Ball Check Valve (Qty: 2) **Tip** Refer to Ball Check Valve Locations .
2	Control Valve Body
	Control Valve Body Bolt M6 x 42 mm (Qty: 5)

3	**Caution:** Refer to Fastener Caution in the Preface section. **Procedure** Tighten the bolts in sequence shown. **Tighten** 9.5 N·m (84 lb in)
4	Control Valve Channel Plate Assembly
5	Control Valve Body Bolt M6 x 48 mm (Qty: 12) **Procedure** Tighten the bolts in sequence shown. **Tighten** 9.5 N·m (84 lb in)

© Copyright Chevrolet. All rights reserved

Manual Shift Shaft Position Switch and Fluid Level Control Valve Installation

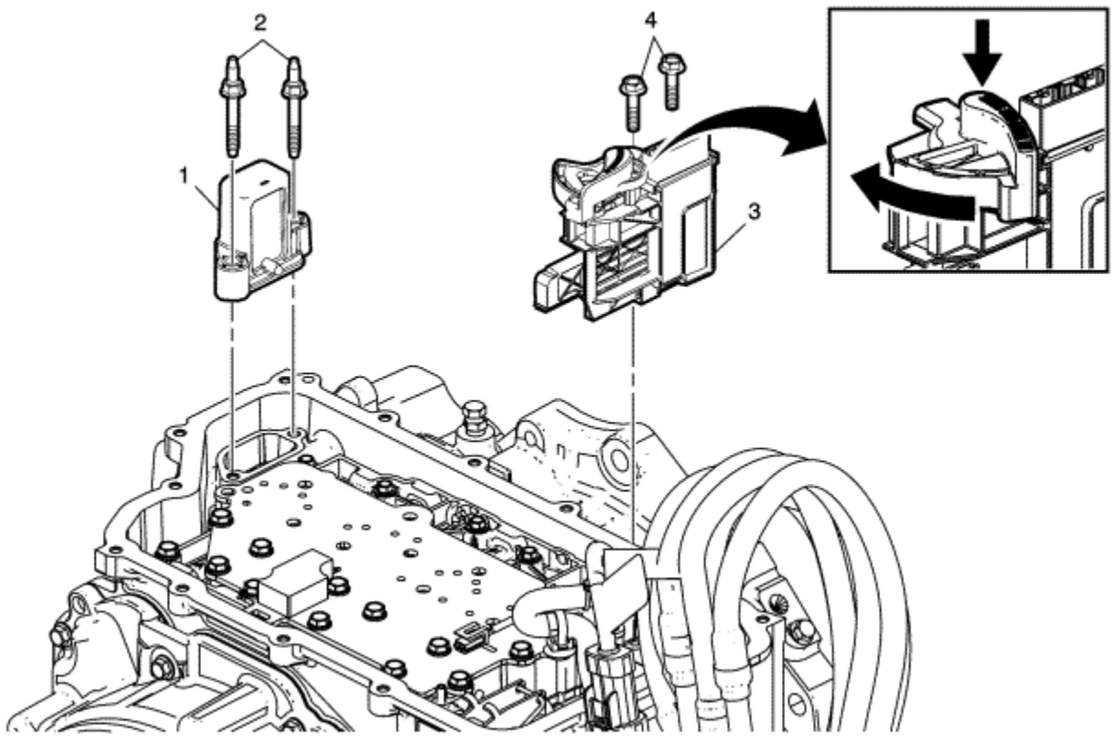

Callout	Component Name
1	A/Trans Fluid Level Control Valve
2	A/Trans Fluid Level Control Valve Stud M6 x 40 mm (Qty: 2) **Caution:** Use the correct fastener in the correct location. Replacement fasteners must be the correct part number for that application. Fasteners requiring replacement or fasteners requiring the use of thread locking compound or sealant are identified in the service procedure. Do not use paints, lubricants, or corrosion inhibitors on fasteners or fastener joint surfaces unless specified. These coatings affect fastener torque and joint clamping force and may damage the fastener. Use the correct tightening sequence and specifications when installing fasteners in order to avoid damage to parts and systems. **Tighten**

	9 N·m (80 lb in)
3	A/Trans Manual Shift Shaft Position Switch Assembly **Procedure** Push down and turn to unlock. **Tip** Insure the sensor slide is engaged with the pin on the detent lever and place the detent or transmission in Neutral.
4	A/Trans Manual Shift Shaft Position Switch Bolt M6 x 25 mm (Qty: 2) **Caution:** Once the manual shift shaft position switch is bolted to specification you must unlock the mechanical locking tab making sure the vehicle and the manual shift shaft position switch are in neutral. The switch may be damaged if not placed in the unlocked position. **Tighten** 9 N·m (80 lb in)

© Copyright Chevrolet. All rights reserved

Control Solenoid Valve and Transmission Control Module Assembly Installation

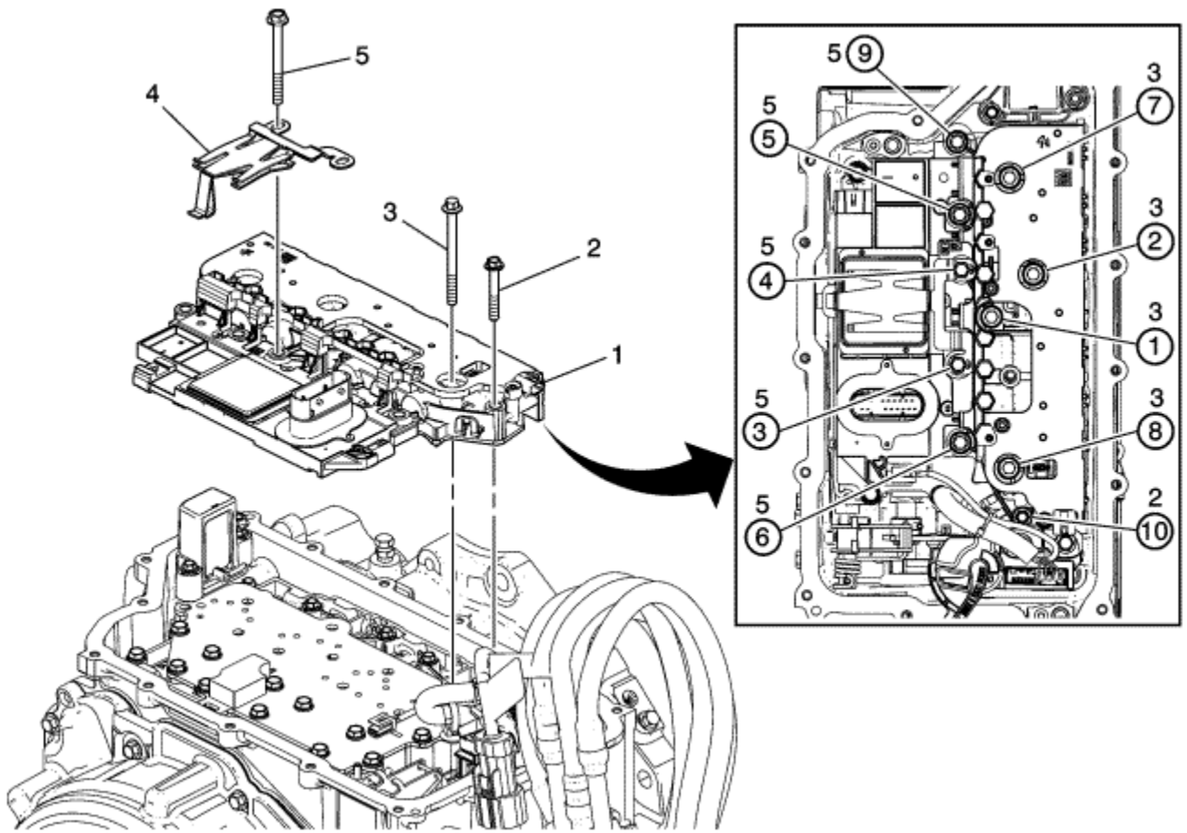

Callout	Component Name
1	Control Solenoid (w/Body and TCM) TEHCM Valve Assembly
	Control Valve Body Bolt M6 x 42 mm (Qty: 1) **Caution:** Refer to Fastener Caution in the Preface section. **Procedure**

2	Tighten the bolt in sequence shown. **Tighten** 9.5 N·m (84 lb in)
3	Control Valve Body Bolt M6 x 75 mm (Qty: 4) **Procedure** Tighten the bolt in sequence shown. **Tighten** 9.5 N·m (84 lb in)
4	Control Solenoid Valve Spring
5	Control Valve Body Bolt M6 x 65 mm (Qty: 5) **Procedure** Tighten the bolt in sequence shown. **Tighten** 9.5 N·m (84 lb in)

© Copyright Chevrolet. All rights reserved

Control Valve Body Cover Installation

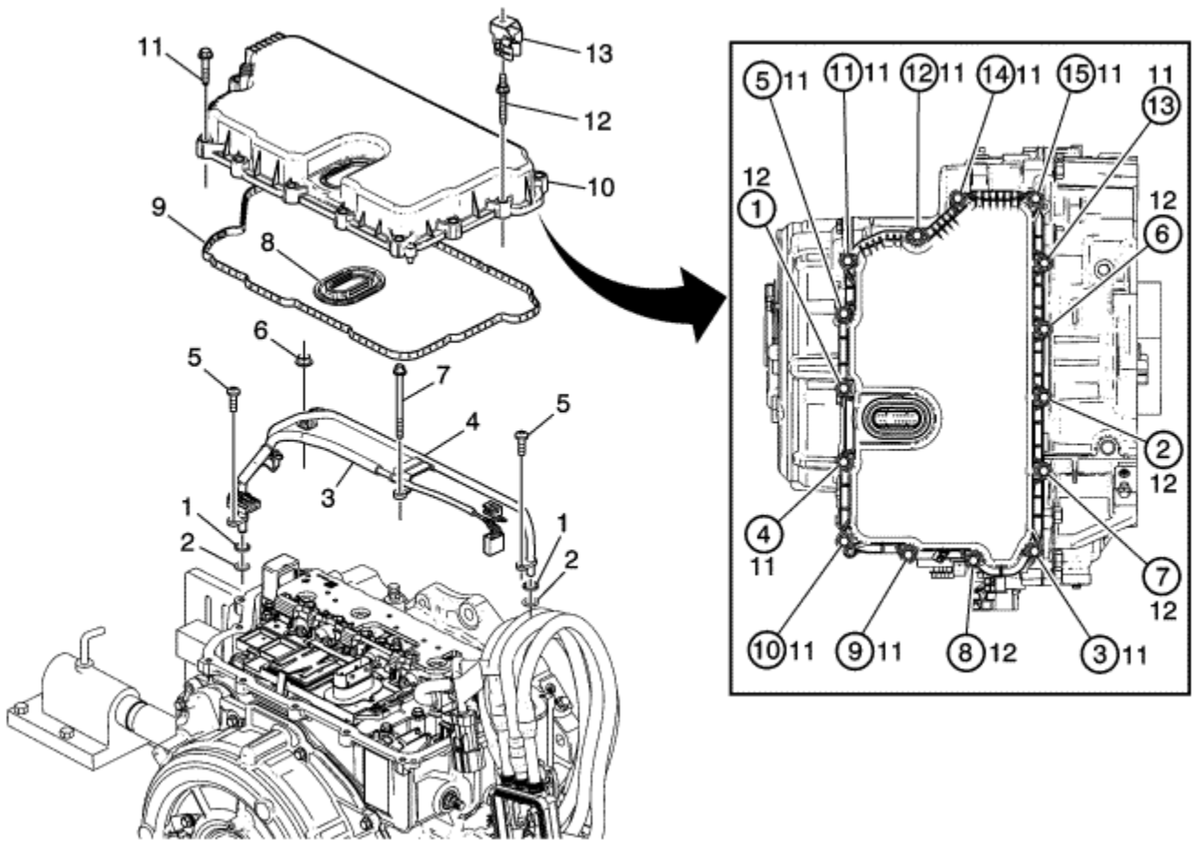

Callout	Component Name
1	Transmission Fluid Cooler Outlet Washer
2	Transmission Fluid Cooler Outlet Seal **Tip** Install a NEW seal. It is not reusable.
	A/Trans Wiring Extension Harness Assembly

3	**Procedure** Make sure you connect all four connectors on the wiring harness in the appropriate locations. **Tip** The wiring harness is attached to the fluid cooler outlet pipe and they will come out together.
4	Transmission Fluid Cooler Outlet Pipe Assembly
5	Fluid Cooler Outlet Pipe Assembly Bolt M5 x 16 mm (Qty: 2) **Caution:** Refer to Fastener Caution in the Preface section. **Tighten** 7.25 N·m (64.2 lb in)
6	Variable Drive Pulley Retaining Nut **Tighten** 9 N·m (80 lb in)
7	Control Valve Body Bolt M6 x 80 mm (Qty: 1) **Tighten** 9.5 N·m (84 lb in)
8	Control Valve Body Cover Wiring Connector Hole Seal
9	Control Valve Body Cover Gasket
10	Control Valve Body Cover Assembly
11	Control Valve Body Cover Bolt M6 x 35 mm (Qty: 10) **Procedure** Tighten the bolts in sequence shown. **Tighten** 9 N·m (80 lb in)
12	Fluid Level Control Valve Stud M6 x 40 mm (Qty: 5) **Tighten** 9 N·m (80 lb in)
13	Auxiliary Pump Motor Cable Retainer

© Copyright Chevrolet. All rights reserved

Torque Damper Installation

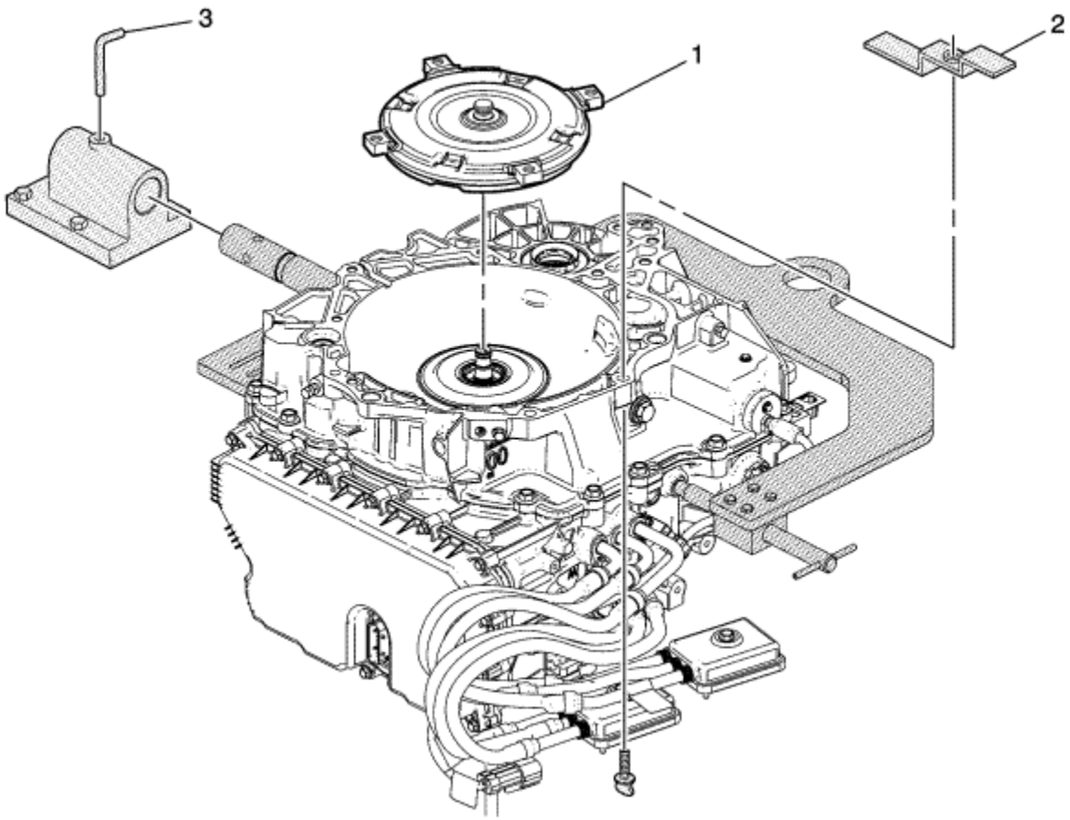

Callout	Component Name
1	A/Trans Torque Damper Assembly **Caution:** Lower the torque damper assembly straight down. Failure to lower the torque damper assembly straight down could damage the torque damper clutch lip seal inside the torque damper assembly.
	DT 21366 Converter Holding Strap

2	**Warning:** The torque damper must be held to the torque damper housing by a retaining device such as shipping brackets. Without the retaining device, the torque damper may slide forward, disengaging the oil pump, or may fall completely out of the transmission causing personal injury and/or property damage. **Special Tools** *DT 21366* Converter Holding Strap For equivalent regional tools, refer to Special Tools .
3	Lock Pin

© Copyright Chevrolet. All rights reserved

Holding Fixture Removal

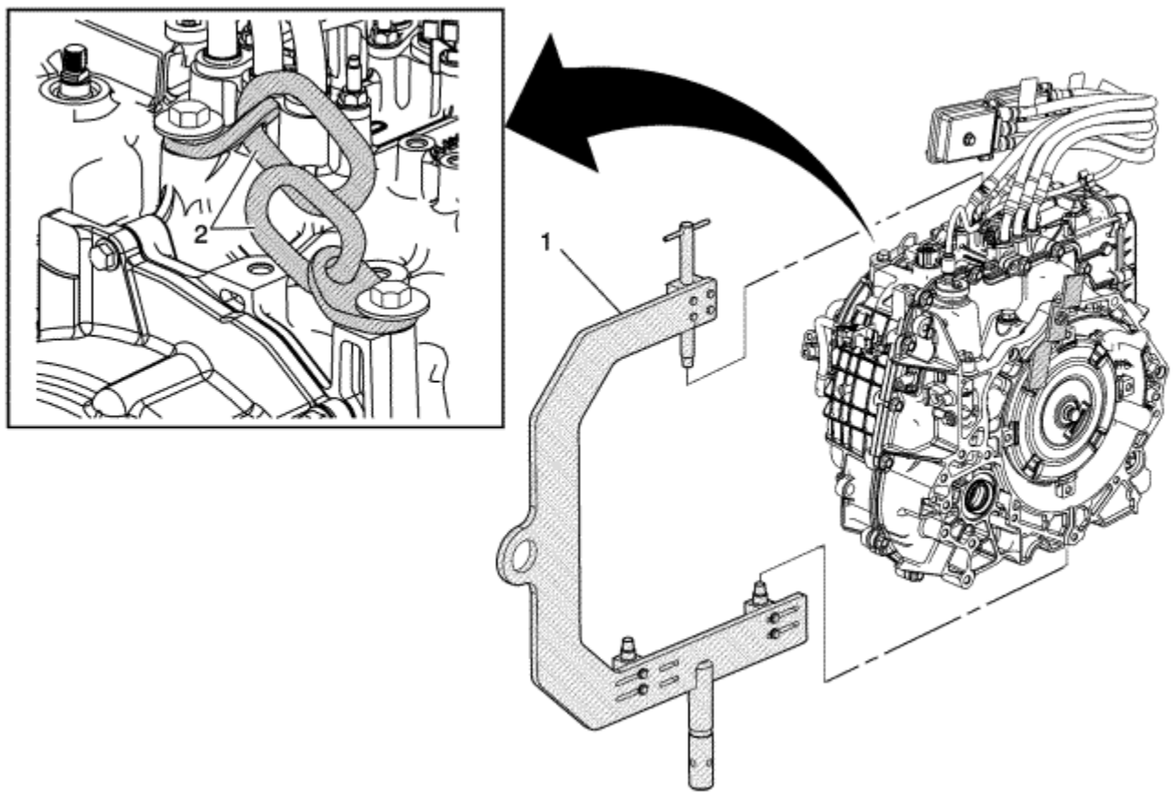

Callout	Component Name
1	DT-46625 Transmission Holding Fixture **Tip** Raise the transmission in order to remove the holding fixture. **Special Tool**

	DT-46625 Transmission Holding Fixture For equivalent regional tools, refer to Special Tools .
2	DT-42451-1 Engine Support Adaptor **Special Tool** *DT-42451-1* Engine Support Adaptor For equivalent regional tools, refer to Special Tools .

© Copyright Chevrolet. All rights reserved

Definitions and Abbreviations

Throttle Positions

Engine Braking: A condition where the engine is used to slow the vehicle by manually downchanging during a zero throttle coastdown.

Full Throttle Downshift: A quick apply of the accelerator pedal to its full travel, forcing a downshift.

Heavy Throttle: Approximately 3/4 of accelerator pedal travel, 75 percent throttle position.

Light Throttle: Approximately 1/4 of accelerator pedal travel, 25 percent throttle position.

Medium Throttle: Approximately 1/2 of accelerator pedal travel, 50 percent throttle position.

Minimum Throttle: The least amount of throttle opening required for an upshift.

Wide Open Throttle (WOT): Full travel of the accelerator pedal, 100 percent throttle position.

Zero Throttle Coastdown: A full release of the accelerator pedal while the vehicle is in motion and in drive range.

Shift Condition Definitions

Bump: A sudden and forceful apply of a clutch or a band.

Chuggle: A bucking or jerking. This condition may be most noticeable when the converter clutch is engaged. It is similar to the feel of towing a trailer.

Delayed: A condition where a shift is expected but does not occur for a period of time. This could be described as a clutch or band engagement that does not occur as quickly as expected during a part throttle or wide open throttle apply of the accelerator, or during manual downshifting to a lower range. This term is also defined as LATE or EXTENDED.

Double Bump - Double Feel: Two sudden and forceful applies of a clutch or a band.

Early: A condition where the shift occurs before the car has reached proper speed. This condition tends to labour the engine after the upshift.

End Bump: A firmer feel at the end of a shift than at the start of the shift. This is also defined as END FEEL or SLIP BUMP.

Firm: A noticeably quick apply of a clutch or band that is considered normal with a medium to heavy throttle. This apply should not be confused with HARSH or ROUGH.

Flare: A quick increase in engine RPM along with a momentary loss of torque. This most generally occurs during a shift. This condition is also defined as SLIPPING.

Harsh - Rough: A more noticeable apply of a clutch or band than FIRM. This condition is considered undesirable at any throttle position.

Hunting: A repeating quick series of upshifts and downshifts that causes a noticeable change in engine RPM, such as a 4-3-4 shift pattern. This condition is also defined as BUSYNESS.

Initial Feel: A distinctly firmer feel at the start of a shift than at the finish of the shift.

Late: A shift that occurs when the engine RPM is higher than normal for a given amount of throttle.

Shudder: A repeating jerking condition similar to CHUGGLE but more severe and rapid. This condition may be most noticeable during certain ranges of vehicle speed.

Slipping: A noticeable increase in engine RPM without a vehicle speed increase. A slip usually occurs during or after initial clutch or band apply.

Soft: A slow, almost unnoticeable clutch or band apply with very little shift feel.

Surge: A repeating engine related condition of acceleration and deceleration that is less intense than CHUGGLE.

Tie-Up: A condition where two opposing clutch and/or bands are attempting to apply at the same time causing the engine to labour with a noticeable loss of engine RPM.

Noise Conditions

Drive Link Noise: A whine or growl that increases or fades with vehicle speed, and is most noticeable under a light throttle acceleration. It may also be noticeable in PARK or NEUTRAL operating ranges with the vehicle stationary.

Final Drive Noise: A hum related to vehicle speed which is most noticeable under a light throttle acceleration.

Planetary Gear Noise: A whine related to vehicle speed, which is most noticeable in FIRST gear, SECOND gear, FOURTH gear or REVERSE. The condition may become less noticeable, or go away, after an upshift.

Pump Noise: A high pitched whine that increases in intensity with engine RPM. This condition may also be noticeable in all operating ranges with the vehicle stationary or moving.

Driver Shift Control

Driver shift control (DSC) allows the driver to change gears similar to a manual transmission. Refer to the vehicle owner's manual for specific DSC operating instructions.

Transmission Abbreviations

A/C: Air Conditioning

AC: Alternating Current

AT: Automatic Transmission

CCDIC : Climate Control Driver Information Centre

DC: Direct Current

DIC: Driver Information Centre

DLC: Diagnostic Link Connector

DMM: Digital Multimeter

DSC: Driver Shift Control

DTC: Diagnostic Trouble Code

EBTCM: Electronic Brake/Traction Control Module

ECCC: Electronically-Controlled Capacity Clutch

ECT: Engine Coolant Temperature

EMI: Electromagnetic Interference

IAT: Intake Air Temperature

IGN: Ignition

IMS: Internal Mode Switch

MAP: Manifold Absolute Pressure

MIL: Malfunction Indicator Lamp

NC: Normally Closed

NO: Normally Open

OBD: On Board Diagnostic

OSS: Output Speed Sensor

PC: Pressure Control

PCM: Powertrain Control Module

PCS: Pressure Control Solenoid

PS: Pressure Switch

PWM: Pulse Width Modulation

RPM: Revolutions Per Minute

SS: Shift Solenoid

TAP: Transmission Adaptive Pressure

TFP: Transmission Fluid Pressure

TFT: Transmission Fluid Temperature

TP: Throttle Position

VSS: Vehicle Speed Sensor

WOT: Wide Open Throttle

© Copyright Chevrolet. All rights reserved

Transmission Identification Information

(1) Code for Automatic Transmission
(2) Model Year
(3) Model for Transmission
(4) Transmission Family
(5) Source Code for Plant
(6) Calendar Year
(7) Julian Date

(8) Shift/Line (A/B)
(9) Numeric sequence starting at 0001 @ 12:01 AM each day

Source Code for Plant

- 4 - Ramos Arizpe, Mexico
- H - Ypsilanti, Michigan
- J - Windsor, Ontario
- S - Strasbourg, France
- W - Warren, Michigan
- Y - Toledo, Ohio
- R - Boryeong, Korea
- M - Yan Tai, Shan Dong, China
- P - San Luis Potosi, Mexico
- S - Silao, Mexico

&#169© Copyright Chevrolet. All rights reserved

Transmission General Description

The MKA 4ET50 is a fully automatic, front wheel drive transaxle, variable-speed, electronic-controlled transmission. It consists primarily of a torque damper assembly, an integral main and auxiliary fluid pump and housing, 1 planetary gear set, 2 friction (rotating) and 1 mechanical (stationary) clutch assemblies, a hydraulic pressurisation and control system, and two internal electric motors. Drive motor with generator A (1) is 55 kW and drive motor with generator B (2) is 111 kW.

The torque damper contains internal torsional springs, fluid, input shaft and a clutch. The torque damper acts as a spring coupling to smoothly transmit power from the engine flexplate to the transmission. The damper provides a mechanical direct drive coupling of the engine to the transmission. The clutch is applied during engine starting and stopping events.

The planetary gear set provides the Electrically Variable forward mode ratios and reverse. Changing ratios is fully automatic and is accomplished through the use of a transmission control module (TCM) located inside the transmission and the drive motor generator power inverter module located under hood. Both the TCM and the drive motor generator power inverter module receives and monitors various electronic sensor inputs and uses this information to vary the torque output at the optimum time based on throttle position.

The TCM commands shift solenoids and variable bleed pressure control solenoids to control torque timing and feel. All the solenoids, including the TCM, are packaged into a self-contained control solenoid valve assembly.

The main hydraulic system primarily consists of a gerotor-type pump, control valve body assemblies, damper housing and case. The pump maintains the working pressures needed to stroke the clutch pistons that apply or release the friction components. These friction components, when applied or released, support the automatic ratios qualities of the transmission.

The hydraulic system also uses a secondary system and consists of an auxiliary pump located inside of the transmission. This is a gerotor-type pump, electric three phase High Voltage motor, electric harness, and control module. The control module is located inside of the drive motor generator power inverter module under the hood. This pump maintains working pressures when the engine is off.

The friction components used in this transmission consist of 3 multiple disc clutches. The multiple disc clutches combine with a planetary gear set and electric motor to deliver the different ratios, forward and reverse. The gear set then transfers torque through the final drive assembly.

The transmission may be operated in any of the following gear ranges:

P (PARK): This position locks the wheels and prevents the vehicle from rolling either forward or backward. PARK is the best position to use when starting the vehicle. Because the transmission utilises a selector lock control system, it is necessary to fully depress the brake pedal before shifting out of PARK. For safety reasons, use the parking brake in addition to the PARK position.

R (REVERSE): This position allows the vehicle to be operated in a rearward direction. This is done by the Drive Motor with Generator B and is electric.

N (NEUTRAL): In this position, the propulsion system does not connect with the wheels.

D (DRIVE): Drive range should be used for all normal driving conditions for maximum efficiency and fuel economy. Drive range allows the transmission to operate in electrically variable modes providing various ratios and output torque.

L (Low): This position is used for the "feel" of engine braking and can be used for the slowing of the vehicle once the throttle is lifted. While in the position the vehicle will slow more quickly and use the B motor to more aggressively collect energy during a regenerative braking event.

© Copyright Chevrolet. All rights reserved

Transmission Component and System Description

The mechanical components of the Electric Range Extended Vehicle MKA 4ET50 Transmission are as follows:

- Torque damper assembly
- Gerotor-type main fluid pump assembly
- Gerotor type auxiliary fluid pump assembly
- Input shaft
- Drive motor with generator assembly A (1) and B (2) position
- Internal gear assembly
- Sun gear carrier assembly
- VL 1-2R, C2-3-4, and C1-3R clutch housing assembly
- Main shaft assembly
- Centre support assembly
- Output shaft assembly
- Control valve body assembly

The electrical components of the EREV MKA 4ET50 are as follows:

- Drive Motor with Generator A (1) 55kW
- Drive Motor with Generator B (2) 111kW
- Output speed sensor assembly
- Manual shift shaft position switch
- Control solenoid valve assembly, which contains the following components:
  - Transmission control module (TCM)
  - 6 variable bleed pressure control (PCS) solenoids
  - 4 transmission fluid pressure (TFP) switch assemblies
  - Torque damper clutch pressure control solenoid (PCS5)
  - 2 shift solenoids

For more information, refer to Electronic Component Description .

&#169© Copyright Chevrolet. All rights reserved

Hybrid Transmission Modes of Operation

Electric Only Engine Off (EV): Upon the driver removing their foot from the brake pedal and depressing the accelerator, the vehicle will launch in electric-only mode or electrically variable (EV). The vehicle operates in full-electric mode without starting the engine for approx 25 to 50 miles depending on ambient temperature, terrain and driving behaviour. DC power from the battery flows to the TPIM where it is converted into 3-phase AC power. Once the battery reaches a determined range the engine will start see Electric Only Engine On.

Electric Only Combined Engine Off (EV): Depending on driver demands and road conditions the vehicle can enter combined mode. If the required torque to propel the vehicle is low then drive motor A can supply the torque needed to move the vehicle. If the demands increase then the primary torque supplied comes from drive motor B.

Electric Only Engine On (EV) or Extended Range: Once the battery reaches a determined range the engine will start. After the engine is started the system operates in electrically variable (EV) mode utilising an input split configuration, where the engine drives motor A to generate electricity to provide power to drive motor B which provides torque to the wheels. The energy generated by drive motor A is either stored in the battery or provided to drive motor B delivering output torque depending on driving conditions. The engine will operate at an appropriate speed to optimise fuel consumption while maintaining output power requirements.

Electric Only Combined Engine On (EV): Depending on driver demands and road conditions the vehicle can enter combined engine on mode. During this mode the engine electrical power is combined with the battery electrical power to provide the output torque required to move the vehicle. The variable 1-3R clutch is locked as well as the variable 2-3-4 clutch.

Regenerative Braking: As the driver lifts their foot from the accelerator pedal and depresses the brake pedal the electric motors are used to decelerate the vehicle by applying negative torque to the output shaft and generate electricity thereby charging the battery. The 3-phase AC power generated by the motor is converted to high-voltage DC power in the HPCM and stored in the battery. The EREV operating system coordinates requests for negative torque requests from the electronic brake module with electric motor and engine control functions.

Engine Start: Once the predetermined state of charge is reached the engine is started by drive motor A. Drive motor A is used to start the engine while the Variable Low 1-2 Clutch remains locked and drive motor B simultaneously provides output power to the wheels. During the engine start event drive motor A also provides active damping to reduce torque disturbances from engine cylinder firing pulses, and drive motor B is used to damp driveline disturbances. During this event the inverter draws DC power from the battery and converts it to AC power for both motors. The drive motor generator power inverter control module controls each motor's speed and power independently. The drive motor generator power inverter control module determines when to stop the engine and when to restart based on vehicle operating conditions and optimal hybrid battery power and fuel consumption. The engine is stopped at idle and during deceleration manoeuvres to improve fuel economy.

Reverse: When the vehicle is placed in reverse the Variable Low 1-2 Clutch is locked and drive motor B spins backwards and provides output torque to the wheels. When needed the engine starts and drive motor A is used to charge the battery and DC power from the battery flows to the HPCM where it is converted into 3-phase AC power to drive motor B.

© Copyright Chevrolet. All rights reserved

Transmission Adaptive Functions

The 4ET50 transmission utilises a line pressure control system during clutch fill to compensate for the normal wear of transmission components. As the apply components within the transmission wear or change over time, shift time (the time required to apply a clutch) increase or decreases. In order to compensate for these changes, the transmission control module (TCM) adjusts the pressure commands to the various PC solenoids, to maintain the originally calibrated shift timing. The automatic adjusting process is referred to as "adaptive learning" and it is used to ensure consistent shift feel plus increase transmission durability. The TCM monitors the A/T input speed and the A/T output speed sensor during commanded shifts to determine if a shift is occurring too fast, harsh, or too slow, soft, and adjusts the corresponding pressure control solenoid signal to maintain the set shift feel.

The purpose of the adapt function is to automatically compensate the shift quality for the various vehicle shift control systems. The adapt function is a continuous process that will help to maintain optimal shift quality throughout the life of the vehicle.

© Copyright Chevrolet. All rights reserved

Transmission Indicators and Messages

No transmission-related indicators or messages are displayed on the instrument panel cluster (IPC). For a complete listing and description of all vehicle indicators and messages, refer to Indicator/Warning Message Description and Operation.

© Copyright Chevrolet. All rights reserved

Electronic Component Description

Electronic Components

The 4ET50 transmission contains the electronic components listed below:

- A/Trans Manual Shaft Position Switch Assembly
- A/Trans Output Speed Sensor Assembly
- Control solenoid valve assembly
- Electric drive motor/generator assembly - unit A
- Electric drive motor/generator assembly - unit B
- Electric auxiliary pump drive motor assembly

This transmission operates in 4 electronically variable transmission modes. High voltage three phase cables connect the 2 motor/generators and the electric auxiliary pump drive motor assembly, to the drive motor generator control module. The high voltage electric auxiliary pump drive provides transmission fluid pressure during engine-off operation.

Electronic Components

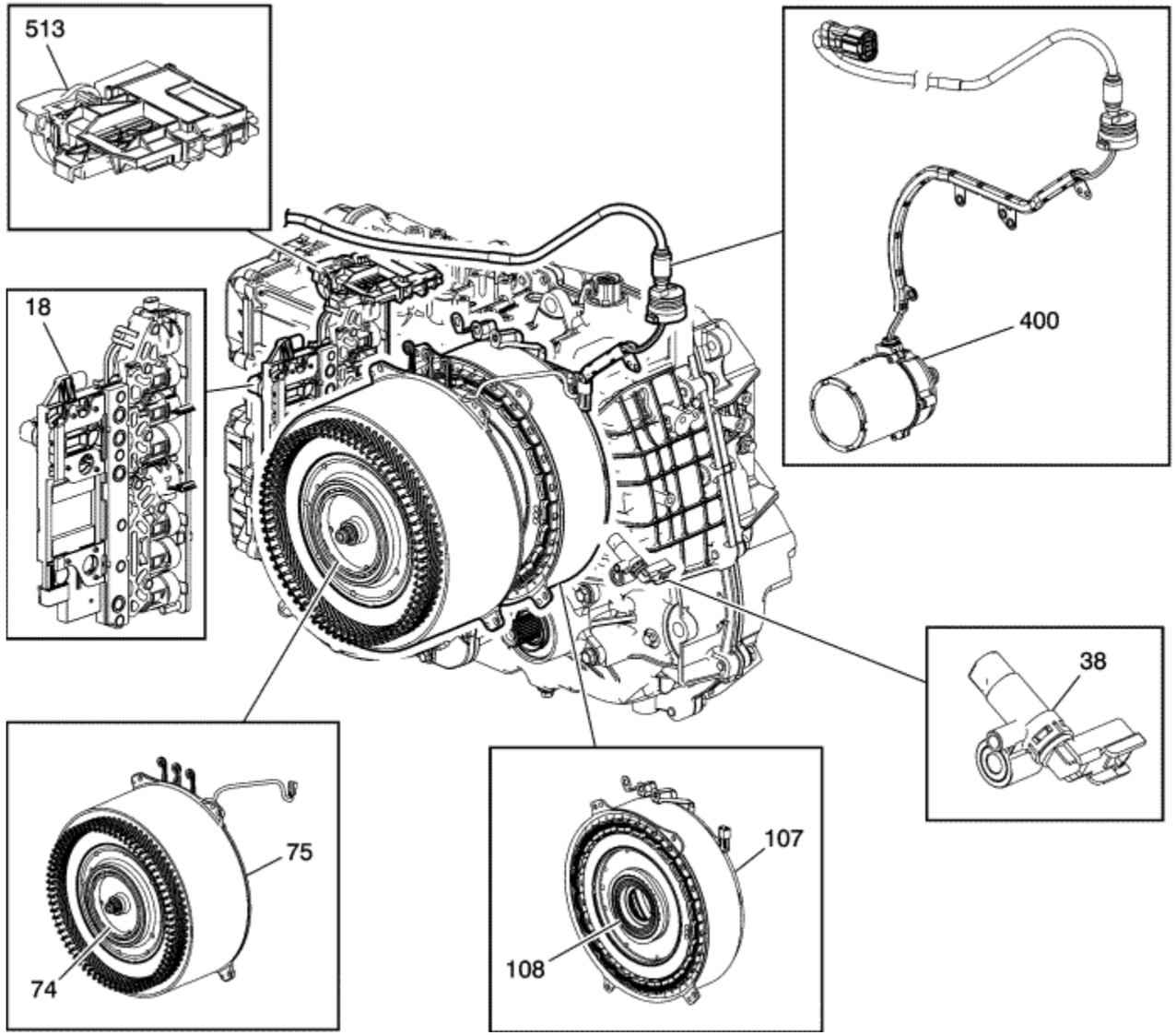

(18) Control Solenoid Valve Assembly
(38) A/Trans Output Speed Sensor Assembly, internal to transmission
(74) Drive Motor/Generator Rotor Assembly -Unit B
(75) Drive Motor/Generator Stator Assembly -Unit B
(107) Generator/Drive Motor Stator Assembly -Unit A
(108) Generator/Drive Motor Rotor Assembly -Unit A
(400) Electric Auxiliary Pump Drive Motor Assembly

(513) A/Trans Manual Shaft Position Switch Assembly

Drive Motor/Generator Assemblies

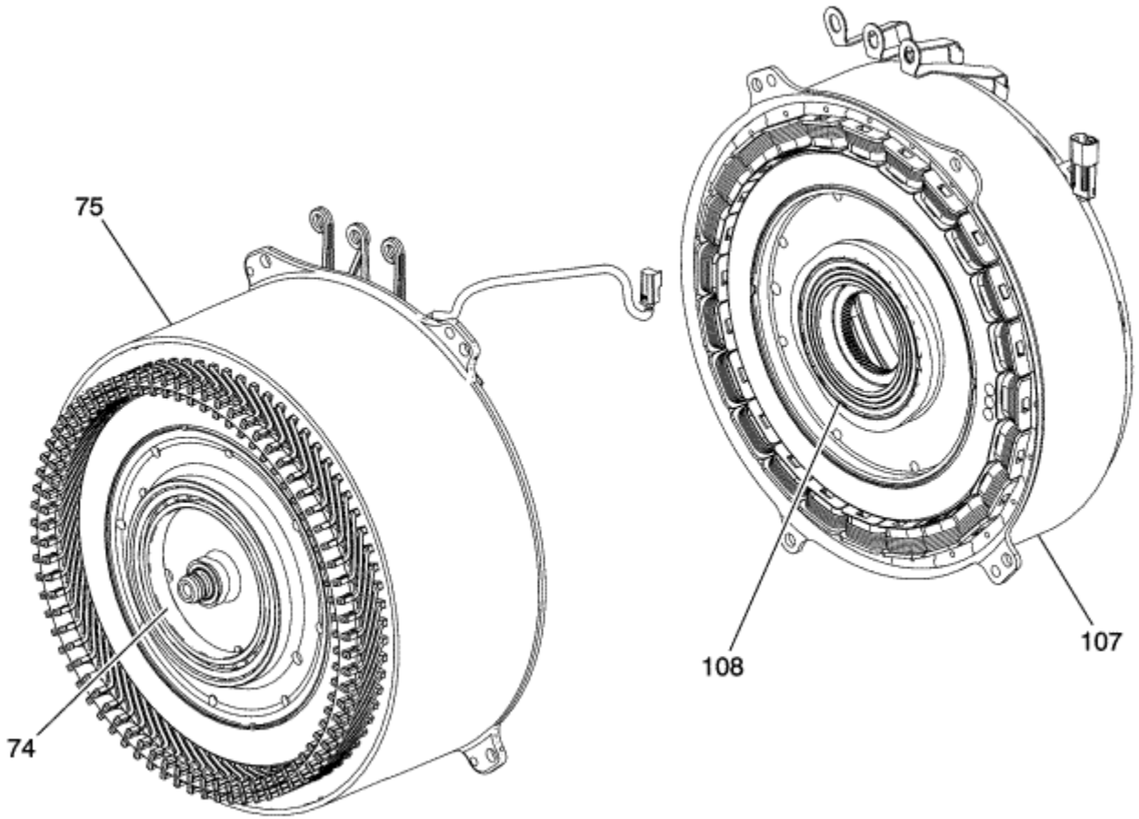

(74) Drive Motor/Generator Rotor Assembly -Unit B
(75) Drive Motor/Generator Stator Assembly -Unit B
(107) Generator/Drive Motor Stator Assembly -Unit A
(108) Generator/Drive Motor Rotor Assembly -Unit A

The drive motor generator power inverter module assembly controls the three permanent magnet 3-phase electric motors that are internal to the transmission, and perform the following functions:

- Torque for vehicle propulsion
- Engine cranking
- Battery charging

- Regenerative Braking
- Transmission fluid pressure during engine-off operation

The Drive Motor/Generator Description

Drive motor/generator assembly - Unit A is a generator referred to as Motor 1 on the scan tool and consists of a permanent magnet rotor with a concentrated wound stator capable of producing 58 kW of peak electrical energy and 185 N·m (136 lb ft) of torque at 300V.

Drive motor/generator assembly - Unit B is a traction motor referred to as Motor 2 on the scan tool and consists of a permanent magnet rotor with a bar wound stator capable of producing 116 kW of peak electrical energy and 370 N·m (273 lb ft) of torque at 300V.

Both are actively cooled via transmission fluid. The drive motor/generator assembly - unit A is used to start the engine and maintain charge to the hybrid battery. The drive motor/generator assembly - unit B propels the vehicle. Motor speeds are controlled and monitored by resolver-type position sensors. The drive motor generator position sensors are monitored by the motor control modules. The motor control modules monitor the angular position, speed and direction of the drive motor generator based upon the signals of these position sensors. The position sensor, or resolver, contains a drive coil, 2 driven coils and an irregular shaped metallic rotor. The metallic rotor is mechanically attached to the shaft of the drive motor generator. At ignition ON, the motor control module outputs a 5 volt ac, 10 kHz excitation signal to the drive coil. The drive coil excitation signal creates a magnetic field surrounding the 2 driven coils and the irregular shaped rotor. The motor control module then monitors the 2 driven coil circuits for a return signal. The position of the irregular shaped metallic rotor causes the magnetically-induced return signals of the driven coils to vary in size and shape. A comparison of the 2 driven coils signals allows the motor control module to determine the exact angle, speed and direction of the drive motor generator. For more information on the drive motor function and system interaction refer to Drive Motor Generator Power Inverter Module Description and Operation .

Electric Auxiliary Pump Drive Motor Assembly

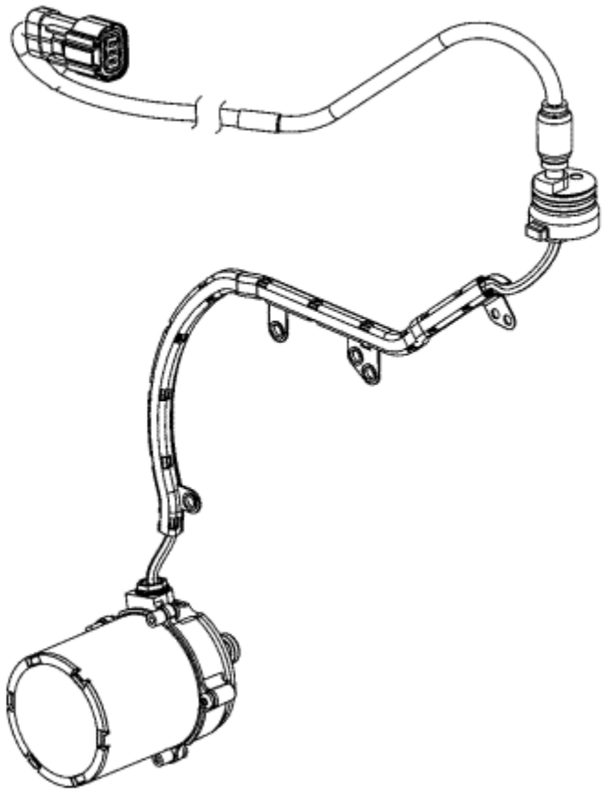

The electric auxiliary pump drive motor assembly is driven by 300V alternating current which is controlled by the drive motor/generator power inverter module assembly. The purpose of the auxiliary pump drive motor is to supply oil pressure to the transmission for lubrication, cooling and clutch application during vehicle propulsion when the engine is off and the main transmission pump is not operating. The auxiliary pump drive motor is commanded on when propulsion is active and the internal combustion engine is Off.

Control Solenoid Valve Assembly

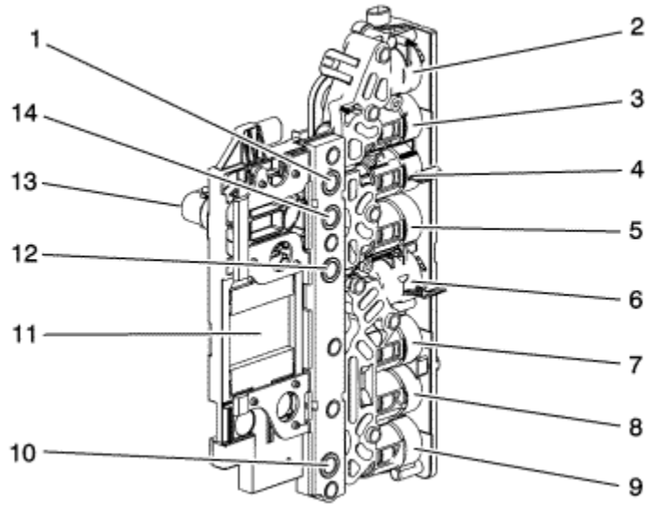

(1) Transmission Fluid Pressure Switch 4
(2) Shift Solenoid 2
(3) Pressure Control Solenoid 3
(4) Pressure Control Solenoid 6 - Not Used
(5) Pressure Control Solenoid 5
(6) Shift Solenoid 1
(7) Pressure Control Solenoid 2
(8) Pressure Control Solenoid 4
(9) Line Pressure Control Solenoid
(10) Transmission Fluid Pressure Switch 1
(11) Transmission Control Module
(12) Transmission Fluid Pressure Switch 3
(13) X1 20 Pin Connector
(14) Transmission Fluid Pressure Switch 5

The control solenoid valve assembly contains the following components:

- Transmission control module
- Clutch pressure control solenoids
- Shift solenoids
- Line pressure control solenoid
- Transmission fluid temperature sensor
- Transmission fluid pressure switches

These components are not serviced separately. The control assembly utilises a lead-frame system to connect these components electrically to the transmission control module. No wires are used for these components. The control solenoid assembly bolts directly to the valve body assembly within the transmission. The control solenoid assembly X1 connector connects to the engine harness.

A/Trans Manual Shift Shaft Position Switch Assembly

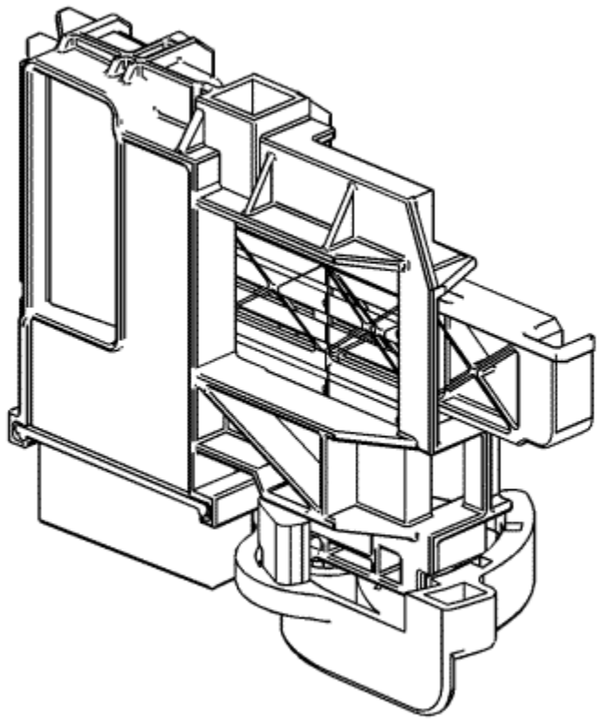

The A/Trans manual shift shaft position switch assembly is a dual sliding hall-effect switch attached to the control valve body within the transmission. The 9 outputs from the switch indicate which position is selected by the transmission manual shaft. Four outputs (A, B, C, P), are range selection inputs to the transmission control module. The five (R1, R2, D1, D2, S) direction selection inputs to the hybrid powertrain control module through the transmission X176 24-way connector. The input voltage at the modules is high when the switch is open and low when the switch is closed. The state of each input is displayed on the scan tool as Internal Mode Switch Range and Internal Mode Switch 2. The Internal Mode Switch Range input parameters represented are transmission range signal A, signal B, signal C and signal P. The Internal Mode Switch 2 parameters represented are transmission direction signal R1, signal R2, signal D1, signal D2 and signal S.

Output Speed Sensor (OSS)

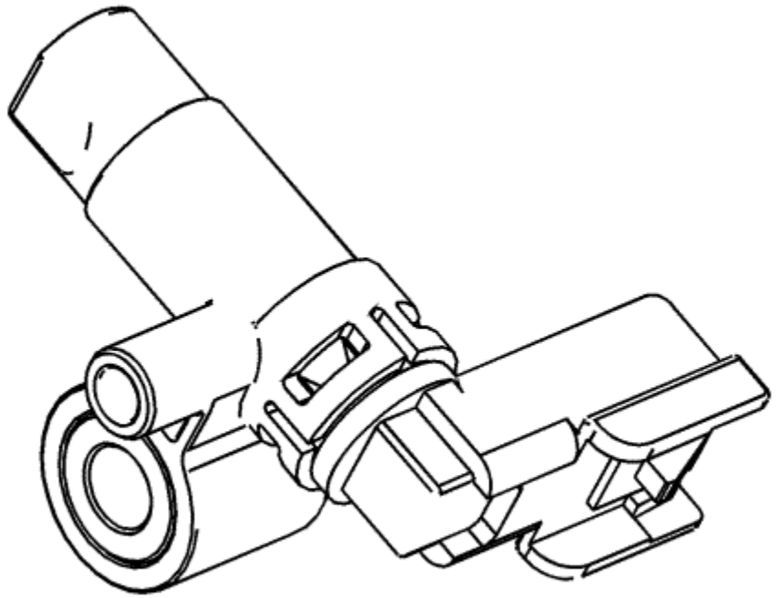

The output speed sensor assembly has 2 internal hall-effect type sensors, and is capable of sensing both speed and direction. The output speed sensor mounts to the A/Trans case assembly and is connected to the control solenoid assembly through a wire harness and connector. The sensor faces the front differential drive pinion (w/transfer gear) gear assembly machined teeth surface. The sensor receives 8.3-9.3 volts on the OSS supply voltage circuit from the transmission control module. As the output shaft rotates, the sensor produces a signal frequency based on the machined surface of the output shaft.

The 2 sensor elements in the output speed sensor assembly are spaced approximately 1/2 a tooth apart.

- When the vehicle is moving in a forward direction, sensor A detects a particular tooth before sensor B.
- When the vehicle is moving in a reverse direction, sensor B detects a particular tooth before sensor A.

The electronics in the sensor combine the 2 signals and send a signal with a different pulse width. This signal is interpreted by the transmission control module for speed and direction and is transmitted through the serial data circuits to the engine control module and the hybrid powertrain control module 1. The engine control module, hybrid powertrain control module 1, and transmission control module compare the output speed sensor signal with the anti-lock brake system wheel speed sensor signal. The hybrid powertrain control module 1 also compares the output shaft direction with the drive motor 1 and drive motor 2 direction.

&#169© Copyright Chevrolet. All rights reserved

Park Engine Off

When the gear selector lever is in the Park (P) position and the internal combustion engine is OFF, the auxiliary fluid pump is commanded ON and line pressure is directed to the pressure regulator valve.

Fluid Pressure Directed in Preparation for a Shift

Variable Low and 1-2 Reverse Clutch Regulator Valve

Line or auxiliary line fluid is routed through orifice #25 to the variable low and 1-2 reverse clutch regulator valve in preparation for a shift.

Variable Hi and 2-3-4 Clutch Regulator Valve

Line or auxiliary line fluid is routed through orifice #23 to the variable hi and 2-3-4 clutch regulator valve in preparation for a shift.

1-3 Reverse Clutch Regulator Valve

Line or auxiliary line fluid is routed through orifice #24 to the 1-3 reverse clutch regulator valve in preparation for a shift.

Damper Bypass Clutch Valve

Line or auxiliary line fluid is routed through orifice #29 to the damper bypass clutch valve in preparation for an apply of the torque damper clutch.

Damper Clutch Charge

Line or auxiliary line fluid is routed through orifices #42 and #43 into the damper clutch charge circuit. Damper clutch charge fluid fills the torque damper clutch assembly in preparation for an apply of the torque damper clutch.

Park Engine Off

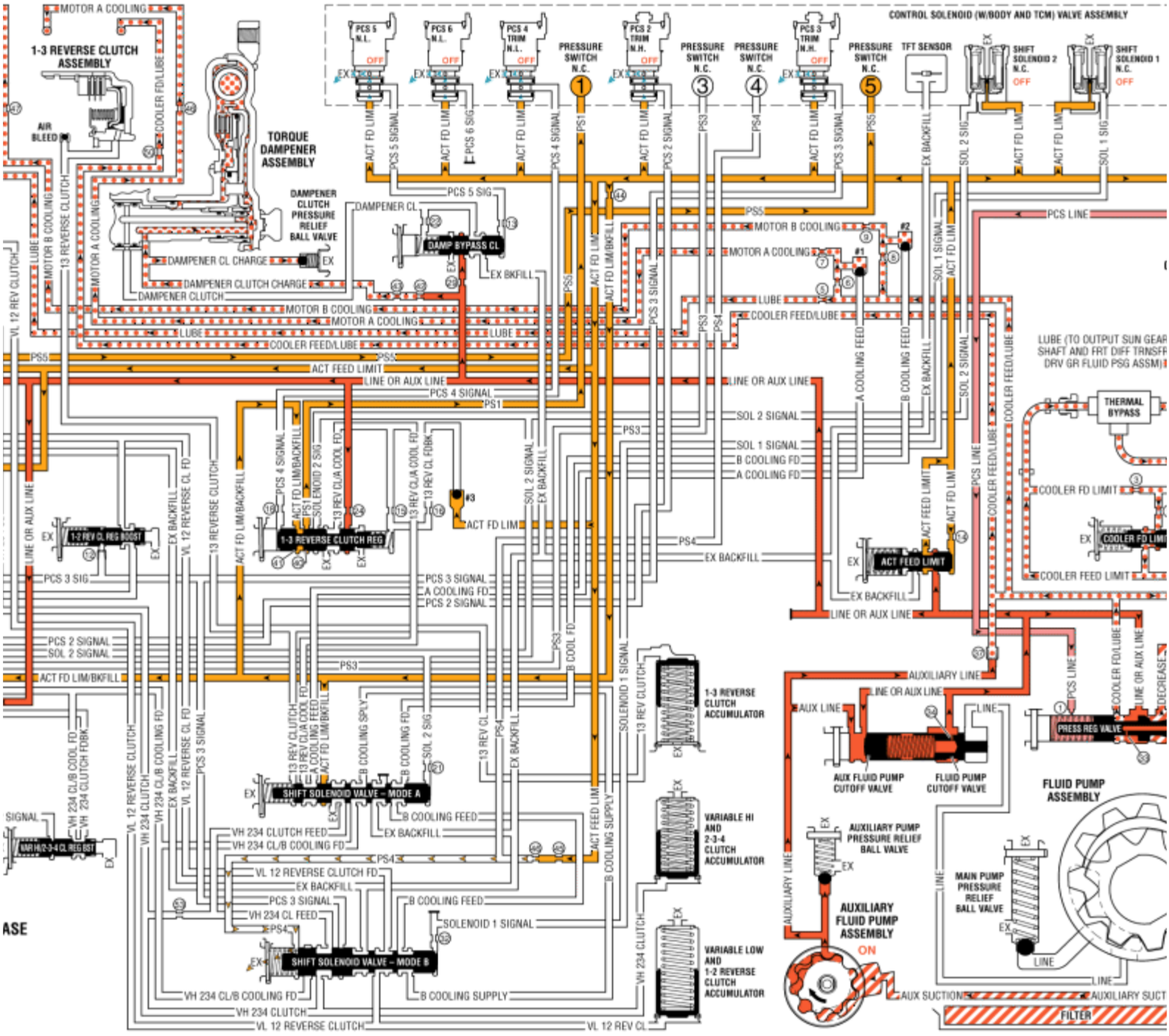

CONTROL SOLENOID (W/BODY AND TCM) VALVE ASSEMBLY
1-3 REVERSE CLUTCH ASSEMBLY
TORQUE DAMPENER ASSEMBLY
DAMPENER CLUTCH PRESSURE RELIEF BALL VALVE
DAMP BYPASS CL
PRESSURE SWITCH N.C.
TFT SENSOR
SHIFT SOLENOID 2 N.C.
SHIFT SOLENOID 1 N.C.
1-2 REV CL REG BOOST
1-3 REVERSE CLUTCH REG
ACT FEED LIMIT
THERMAL BYPASS
COOLER FD LIMIT
COOLER FEED LIMIT
PRESS REG VALVE
1-3 REVERSE CLUTCH ACCUMULATOR
VARIABLE HI AND 2-3-4 CLUTCH ACCUMULATOR
VARIABLE LOW AND 1-2 REVERSE CLUTCH ACCUMULATOR
SHIFT SOLENOID VALVE – MODE A
SHIFT SOLENOID VALVE – MODE B
AUX FLUID PUMP CUTOFF VALVE
FLUID PUMP CUTOFF VALVE
AUXILIARY PUMP PRESSURE RELIEF BALL VALVE
AUXILIARY FLUID PUMP ASSEMBLY
FLUID PUMP ASSEMBLY
MAIN PUMP PRESSURE RELIEF BALL VALVE
FILTER

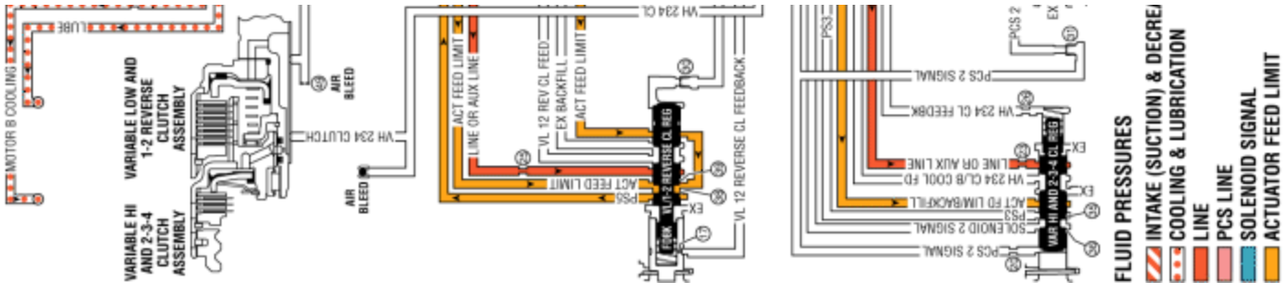

© Copyright Chevrolet. All rights reserved

Park Engine On

When the transmission is operating in Park (Engine OFF), and the HPCM determines that vehicle operating conditions (low state of battery charge) are appropriate, the internal combustion engine (ICE) is started, the auxiliary fluid pump is turned OFF, and the main fluid pump provides hydraulic fluid pressure (refer to Engine Start). After Engine Start, the following changes would occur to the transmission's hydraulic and electrical systems.

1-3 Reverse Clutch Releases

Pressure Control (PC) Solenoid 4

The PC solenoid 4 is commanded OFF, allowing PCS 4 signal fluid to exhaust from the 1-3 reverse clutch regulator valve.

Shift Solenoid 2

The shift solenoid 2 is commanded OFF, allowing solenoid 2 signal fluid to exhaust. When solenoid 2 signal fluid exhausts, the shift solenoid valve - mode A moves to the released position.

1-3 Reverse Clutch Assembly

13 reverse clutch fluid pressure is exhausted from the 1-3 reverse clutch housing assembly, allowing 1-3 reverse clutch spring force to move the 1-3 reverse clutch piston and release the 1-3 reverse clutch plates.

Shift Solenoid Valve - Mode A

13 reverse clutch fluid pressure exhausts at the shift solenoid valve - mode A.

#3 Ball Check Valve

13 reverse clutch feedback fluid pressure exhausts into the 13 reverse clutch/A cooling feed circuit, allowing actuator feed limit fluid to seat the ball.

1-3 Reverse Clutch Regulator Valve

1-3 reverse clutch regulator valve spring force moves the 1-3 reverse clutch regulator valve to the released position, allowing 13 reverse clutch/A cooling feed fluid pressure to

exhaust.

Torque Damper Clutch Releases

Pressure Control (PC) Solenoid 5

The PC solenoid 5 is de-energised (OFF) allowing PCS 5 signal fluid to exhaust from the damper bypass clutch valve.

Torque Damper Clutch Assembly

Damper clutch fluid exhausts from the torque damper clutch assembly to the damper bypass clutch valve allowing the torque damper clutch to release.

Damper Bypass Clutch Valve

Damper bypass clutch valve spring force moves the damper bypass clutch valve to the released position, allowing damper clutch fluid pressure to exhaust through the valve into the exhaust backfill circuit.

Transmission Fluid Temperature (TFT) Sensor

Damper clutch fluid pressure in the exhaust backfill circuit exhausts at the TFT sensor.

Shift Accumulation

1-3 Reverse Clutch Accumulator

13 reverse clutch fluid also exhausts from the 1-3 reverse clutch accumulator assembly. Accumulator spring force moves the 1-3 reverse clutch accumulator piston to the released position.

Park Engine On

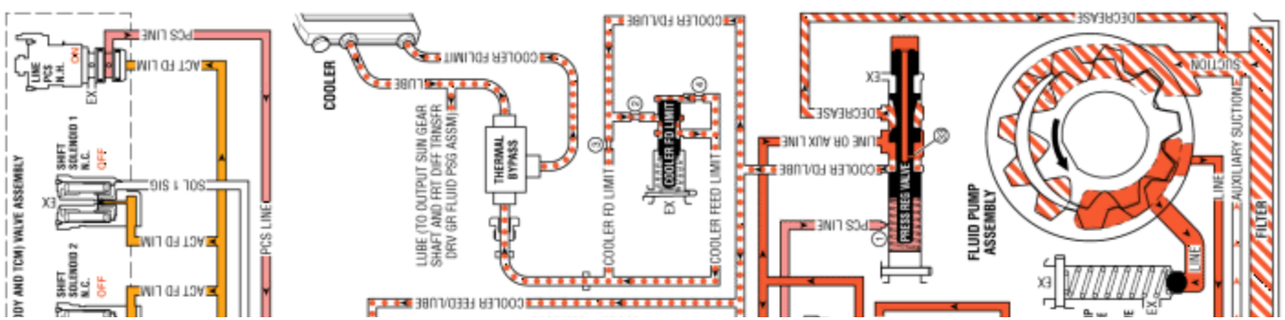

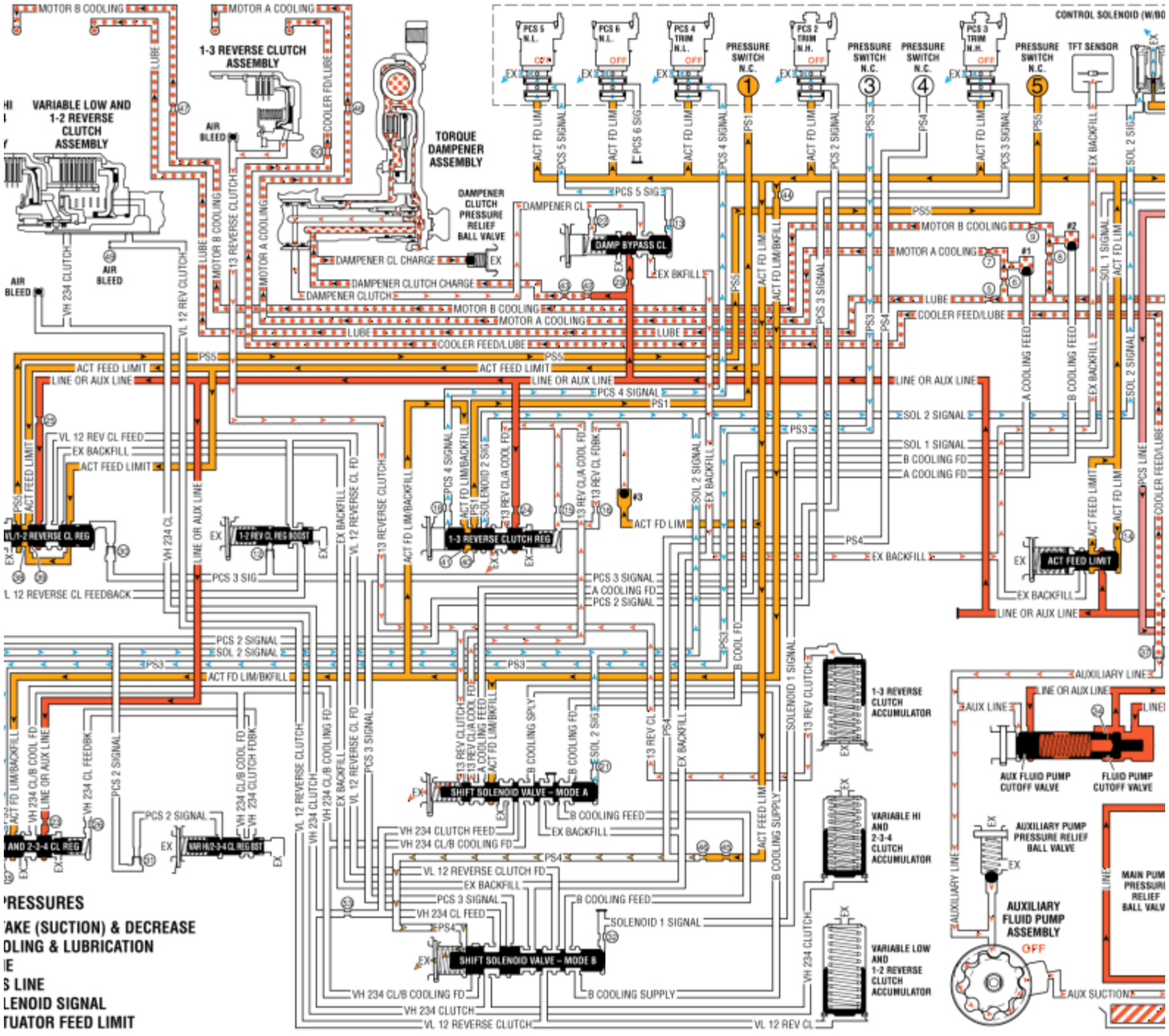

'RESSURES

'AKE (SUCTION) & DECREASE

OLING & LUBRICATION

IE

S LINE

LENOID SIGNAL

TUATOR FEED LIMIT

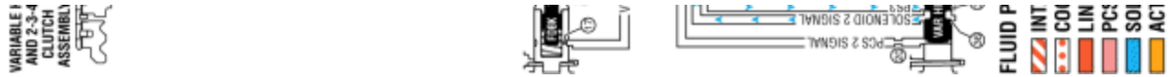

© Copyright Chevrolet. All rights reserved

Neutral Engine Off

When the gear selector lever is moved to the Neutral (N) position, the hydraulic and electrical system operation is identical to Park (P) range. However, if Neutral is selected after the vehicle was operating in Reverse (R), the following changes would occur in the hydraulic system.

1-3 Reverse Clutch Releases

If the transmission is operating in Reverse, and the internal combustion engine is ON when a shift to Neutral occurs, the 1-3 reverse clutch is released.

Pressure Control (PC) Solenoid 4

The PC solenoid 4 is commanded OFF, allowing PCS 4 signal fluid to exhaust from the 1-3 reverse clutch regulator valve.

1-3 Reverse Clutch Assembly

13 reverse clutch fluid pressure is exhausted from the 1-3 reverse clutch housing assembly, allowing 1-3 reverse clutch spring force to move the 1-3 reverse clutch piston and release the 1-3 reverse clutch plates.

Shift Solenoid Valve - Mode A

13 reverse clutch fluid pressure exhausts at the shift solenoid valve - mode A.

#3 Ball Check Valve

13 reverse clutch feedback fluid pressure exhausts into the 13 reverse clutch/A cooling feed circuit, allowing actuator feed limit fluid to seat the ball.

1-3 Reverse Clutch Regulator Valve

1-3 reverse clutch regulator valve spring force moves the 1-3 reverse clutch regulator valve to the released position, allowing 13 reverse clutch/A cooling feed fluid pressure to exhaust.

Variable Low and 1-2 Reverse Clutch Releases

If the transmission is operating in Reverse - Series Mode when a shift to Neutral occurs, the variable low and 1-2 reverse clutch is released.

Pressure Control (PC) Solenoid 3

The PC solenoid 3 is de-energised (OFF) allowing PCS 3 signal fluid to exhaust from the variable low and 1-2 reverse clutch regulator valve; the variable low and 1-2 reverse clutch boost valve; and the shift solenoid valve -mode B.

Variable Low and 1-2 Reverse Clutch Assembly

VL 12 reverse clutch fluid exhausts from the variable low and 1-2 reverse clutch to the shift solenoid valve - mode B allowing the variable low and 1-2 reverse clutch to release.

Shift Solenoid Valve - Mode B

VL 12 reverse clutch fluid passes through the shift solenoid valve - mode B and into the VL 12 reverse clutch feed fluid circuit and is routed to the variable low and 1-2 reverse clutch regulator valve.

Variable Low and 1-2 Reverse Clutch Boost Valve

Variable low and 1-2 reverse clutch boost valve spring force moves the variable low and 1-2 reverse clutch boost valve to the released position, allowing VL 12 reverse clutch feedback fluid pressure to exhaust into the VL 12 reverse clutch feed circuit.

Variable Low and 1-2 Reverse Clutch Regulator Valve

Variable low and 1-2 reverse clutch regulator valve spring force moves the variable low and 1-2 reverse clutch regulator valve to the released position, allowing VL 12 reverse clutch feed fluid pressure to exhaust through the valve into the exhaust backfill circuit.

Transmission Fluid Temperature (TFT) Sensor

VL 12 reverse clutch fluid pressure in the exhaust backfill circuit exhausts at the TFT sensor.

Variable Hi and 2-3-4 Clutch Releases

If the transmission is operating in Reverse - Output Split when a shift to Neutral occurs, the variable hi and 2-3-4 clutch is released.

Pressure Control (PC) Solenoid 2

The PC solenoid 2 is commanded OFF, allowing PCS 2 signal fluid to exhaust from the variable hi and 2-3-4 clutch regulator valve and the variable hi and 2-3-4 clutch boost valve.

Variable Hi and 2-3-4 Clutch Assembly

VH 234 clutch fluid pressure is exhausted from the case assembly, allowing variable hi and 2-3-4 clutch spring force to move the variable hi and 2-3-4 clutch piston and release the variable hi and 2-3-4 clutch plates.

Shift Solenoid Valve - Mode B

Exhausting VH 234 clutch fluid pressure passes through the shift solenoid valve - mode B into the VH 234 clutch feed circuit.

Shift Solenoid Valve - Mode A

VH 234 clutch feed fluid pressure exhausts at the shift solenoid valve - mode A.

Variable Hi and 2-3-4 Clutch Regulator Valve

Variable hi and 2-3-4 clutch regulator valve spring force moves the variable hi and 2-3-4 clutch regulator valve to the released position, allowing VH 234 clutch/B cooling feed fluid pressure to exhaust.

Shift Accumulation

1-3 Reverse Clutch Accumulator

13 reverse clutch fluid also exhausts from the 1-3 reverse clutch accumulator assembly. Accumulator spring force moves the 1-3 reverse clutch accumulator piston to the released position.

Variable Low and 1-2 Reverse Clutch Accumulator

VL 12 reverse clutch fluid also exhausts from the variable low and 1-2 reverse clutch accumulator assembly. Accumulator spring force moves the variable low and 1-2 reverse clutch accumulator piston to the released position.

Variable Hi and 2-3-4 Clutch Accumulator

VH 234 clutch fluid also exhausts from the variable hi and 2-3-4 clutch accumulator assembly. Accumulator spring force moves the variable hi and 2-3-4 clutch accumulator piston to the released position.

Neutral Engine Off

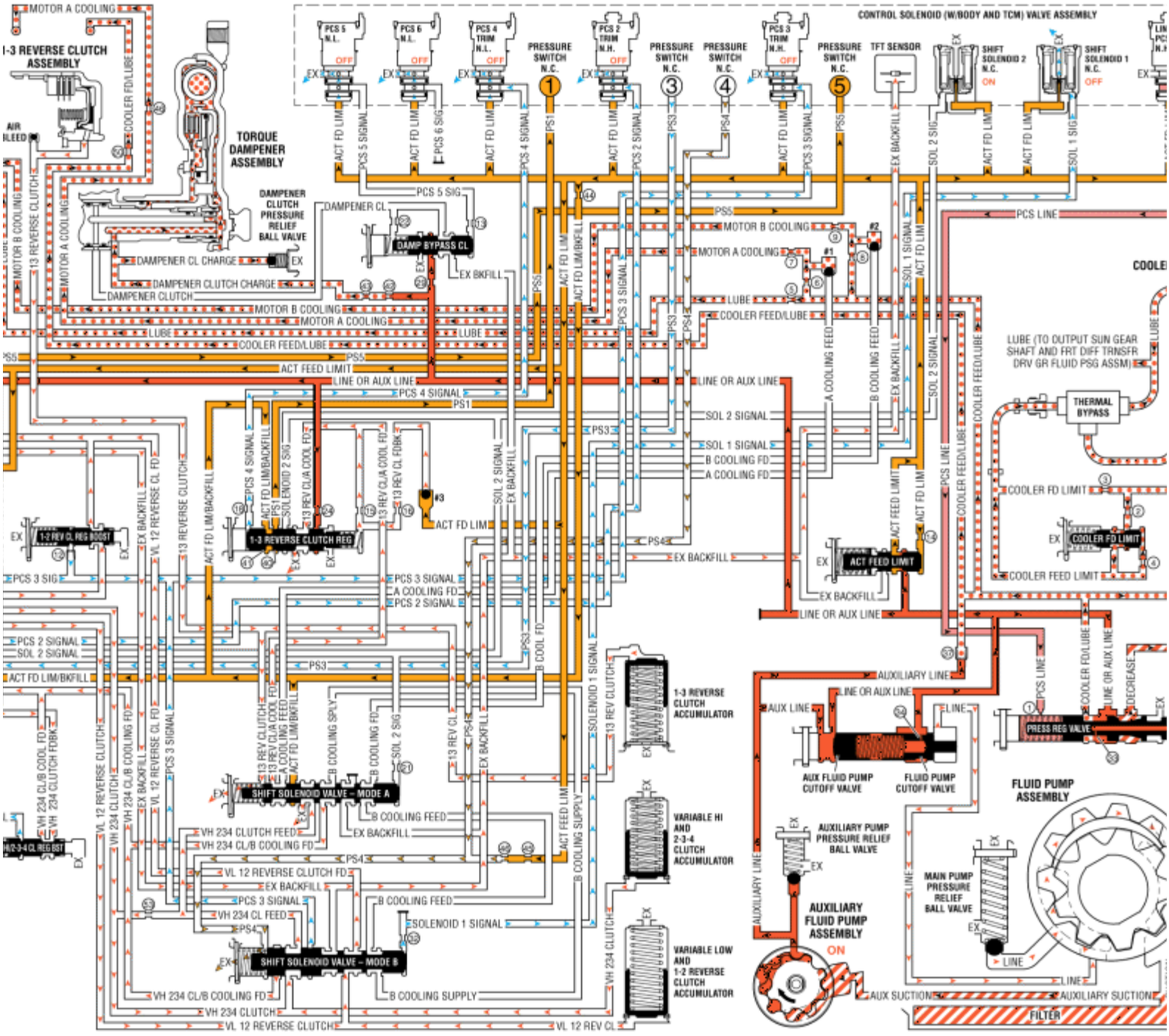
CONTROL SOLENOID (W/BODY AND TCM) VALVE ASSEMBLY
PCS 5 N.L.
PCS 6 N.L.
PCS 4 TRIM N.L.
PRESSURE SWITCH N.C.
PCS 2 TRIM N.H.
PRESSURE SWITCH N.C.
PRESSURE SWITCH N.C.
PCS 3 TRIM N.H.
PRESSURE SWITCH N.C.
TFT SENSOR
SHIFT SOLENOID 2 N.C.
SHIFT SOLENOID 1 N.C.
OFF
ON
MOTOR A COOLING
1-3 REVERSE CLUTCH ASSEMBLY
COOLER FD/LUBE
TORQUE DAMPENER ASSEMBLY
DAMPENER CLUTCH PRESSURE RELIEF BALL VALVE
DAMPENER CL
DAMP BYPASS CL
DAMPENER CL CHARGE
DAMPENER CLUTCH CHARGE
DAMPENER CLUTCH
MOTOR B COOLING
LUBE
COOLER FEED/LUBE
ACT FEED LIMIT
LINE OR AUX LINE
PCS 5 SIG
PCS 4 SIGNAL
PCS 3 SIGNAL
PCS 2 SIGNAL
SOL 2 SIGNAL
SOL 1 SIGNAL
B COOLING FD
A COOLING FD
EX BKFILL
EX BACKFILL
ACT FD LIM/BKFILL
PCS LINE
LUBE (TO OUTPUT SUN GEAR SHAFT AND FRT DIFF TRNSFR DRV GR FLUID PSG ASSM)
THERMAL BYPASS
COOLER FD LIMIT
COOLER FEED LIMIT
1-2 REV CL REG BOOST
1-3 REVERSE CLUTCH REG
ACT FD LIM
13 REVERSE CLUTCH
VL 12 REVERSE CL FD
VH 234 CL/B COOL FD
VH 234 CLUTCH FDBK
SOLENOID 2 SIG
13 REV CL/A COOL FD
13 REV CL FDBK
SHIFT SOLENOID VALVE – MODE A
SHIFT SOLENOID VALVE – MODE B
B COOLING SPLY
B COOLING FEED
VH 234 CLUTCH FEED
VH 234 CL/B COOLING FD
VL 12 REVERSE CLUTCH FD
VH 234 CL FEED
SOLENOID 1 SIGNAL
B COOLING SUPPLY
VH 234 CLUTCH
VL 12 REVERSE CLUTCH
VL 12 REV CL
1-3 REVERSE CLUTCH ACCUMULATOR
VARIABLE HI AND 2-3-4 CLUTCH ACCUMULATOR
VARIABLE LOW AND 1-2 REVERSE CLUTCH ACCUMULATOR
AUXILIARY LINE
AUX LINE
AUX FLUID PUMP CUTOFF VALVE
FLUID PUMP CUTOFF VALVE
PRESS REG VALVE
DECREASE
FLUID PUMP ASSEMBLY
AUXILIARY PUMP PRESSURE RELIEF BALL VALVE
AUXILIARY FLUID PUMP ASSEMBLY
MAIN PUMP PRESSURE RELIEF BALL VALVE
AUX SUCTION
AUXILIARY SUCTION
FILTER

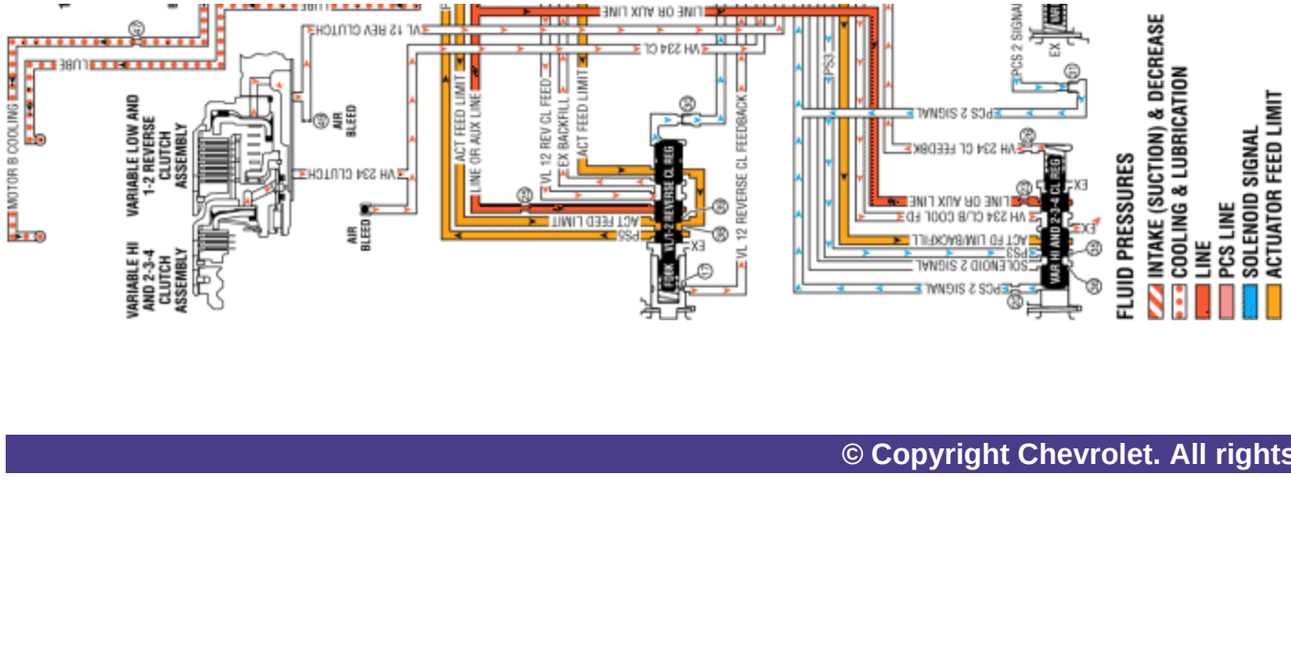

© Copyright Chevrolet. All rights reserved

Neutral Engine On

When the transmission is operating in Neutral (Engine OFF), and the HPCM determines that vehicle operating conditions (low state of battery charge) are appropriate, the internal combustion engine (ICE) is started, the auxiliary fluid pump is turned OFF, and the main fluid pump provides hydraulic fluid pressure (refer to Engine Start). After Engine Start, the following changes would occur to the transmission's hydraulic and electrical systems.

1-3 Reverse Clutch Releases

Pressure Control (PC) Solenoid 4

The PC solenoid 4 is commanded OFF, allowing PCS 4 signal fluid to exhaust from the 1-3 reverse clutch regulator valve.

Shift Solenoid 2

The shift solenoid 2 is commanded OFF, allowing solenoid 2 signal fluid to exhaust. When solenoid 2 signal fluid exhausts, the shift solenoid valve - mode A moves to the released position.

1-3 Reverse Clutch Assembly

13 reverse clutch fluid pressure is exhausted from the 1-3 reverse clutch housing assembly, allowing 1-3 reverse clutch spring force to move the 1-3 reverse clutch piston and release the 1-3 reverse clutch plates.

Shift Solenoid Valve - Mode A

13 reverse clutch fluid pressure exhausts at the shift solenoid valve - mode A.

#3 Ball Check Valve

13 reverse clutch feedback fluid pressure exhausts into the 13 reverse clutch/A cooling feed circuit, allowing actuator feed limit fluid to seat the ball.

1-3 Reverse Clutch Regulator Valve

1-3 reverse clutch regulator valve spring force moves the 1-3 reverse clutch regulator valve to the released position, allowing 13 reverse clutch/A cooling feed fluid pressure to

exhaust.

Torque Damper Clutch Releases

Pressure Control (PC) Solenoid 5

The PC solenoid 5 is de-energised (OFF) allowing PCS 5 signal fluid to exhaust from the damper bypass clutch valve.

Torque Damper Clutch Assembly

Damper clutch fluid exhausts from the torque damper clutch assembly to the damper bypass clutch valve allowing the torque damper clutch to release.

Damper Bypass Clutch Valve

Damper bypass clutch valve spring force moves the damper bypass clutch valve to the released position, allowing damper clutch fluid pressure to exhaust through the valve into the exhaust backfill circuit.

Transmission Fluid Temperature (TFT) Sensor

Damper clutch fluid pressure in the exhaust backfill circuit exhausts at the TFT sensor.

Shift Accumulation

1-3 Reverse Clutch Accumulator

13 reverse clutch fluid also exhausts from the 1-3 reverse clutch accumulator assembly. Accumulator spring force moves the 1-3 reverse clutch accumulator piston to the released position.

Neutral Engine On

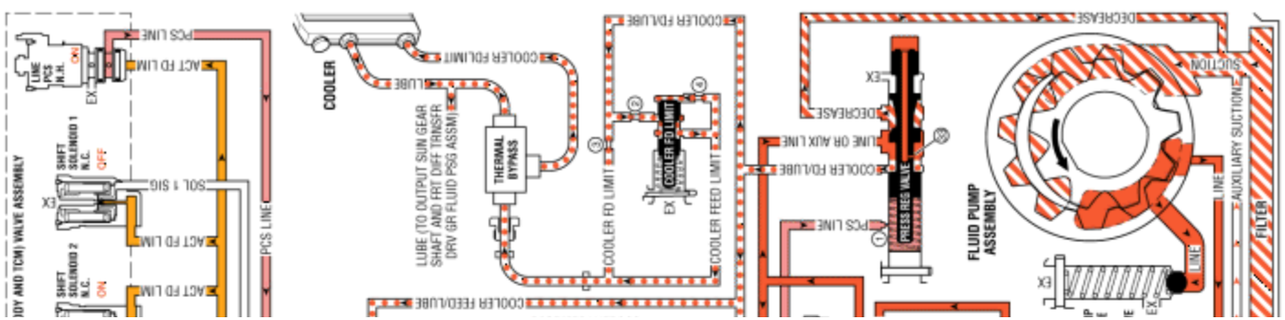

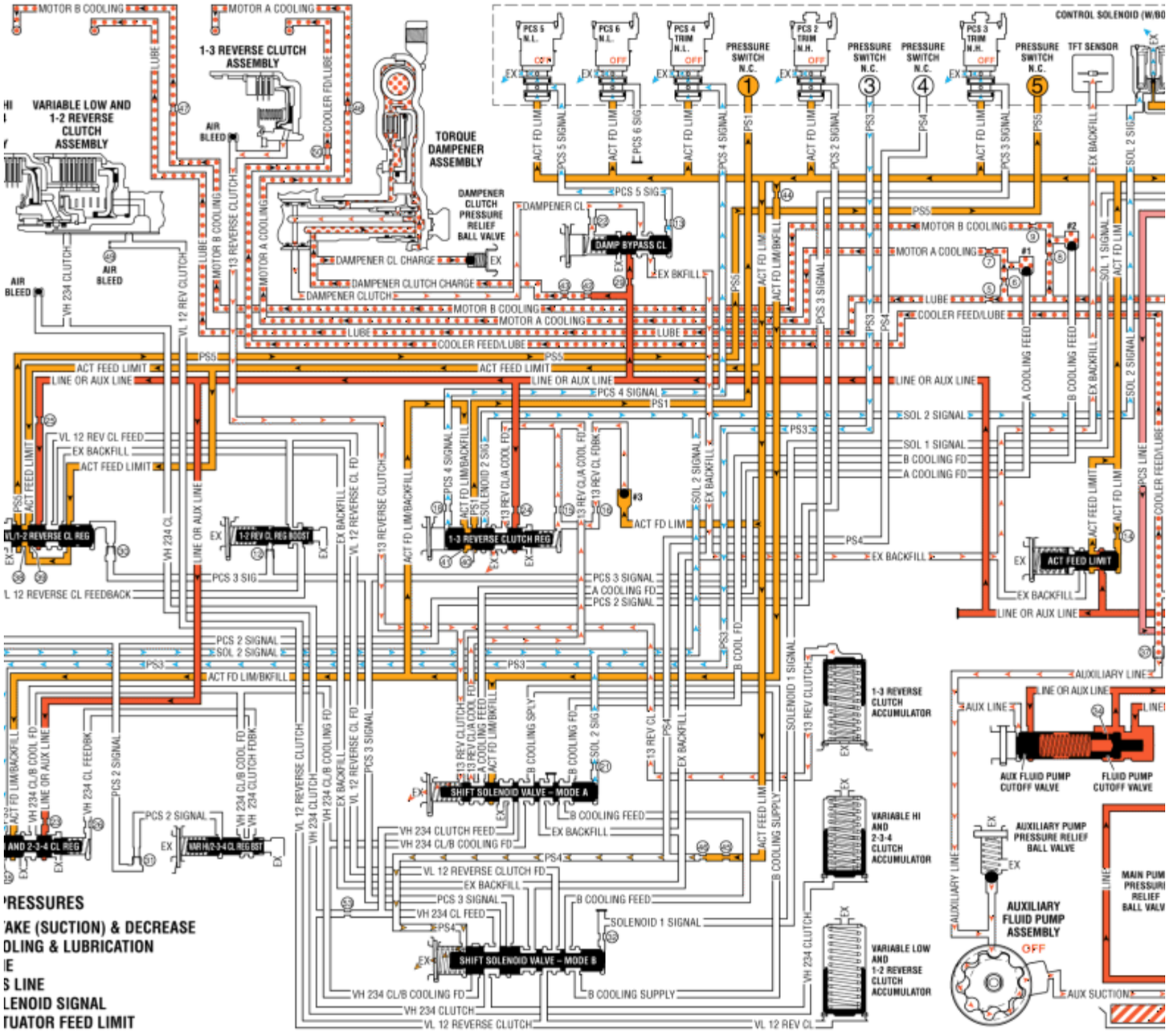

'RESSURES

'AKE (SUCTION) & DECREASE

OLING & LUBRICATION

IE

S LINE

LENOID SIGNAL

TUATOR FEED LIMIT

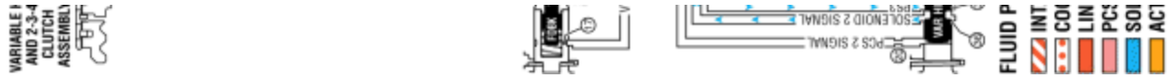

© Copyright Chevrolet. All rights reserved

Engine Start

When the vehicle is operating with the internal combustion engine OFF and auxiliary fluid pump ON, and the HPCM determines that vehicle operating conditions (low state of battery charge) are appropriate for starting the internal combustion engine (ICE), it commands the following changes to the transmission's hydraulic and electrical systems.

Note: The illustration shown depicts an Engine Start event that occurs during vehicle operation in Park. However, Engine Start can occur in any transmission operating range.

Torque Damper Clutch Applies

Pressure Control (PC) Solenoid 5

The PC solenoid 5 is energised (ON) allowing actuator feed limit fluid to enter the PCS 5 signal circuit. PCS 5 signal fluid is then routed through orifice #13 to the damper bypass clutch valve.

Damper Bypass Clutch Valve

PCS 5 signal fluid, at the damper bypass clutch valve, opposes damper bypass clutch valve spring force and orificed damper clutch fluid pressure to regulate line or auxiliary line pressure into the damper clutch circuit. Damper clutch fluid is routed to the torque damper clutch.

Torque Damper Clutch Assembly

A feed hole in the input shaft allows fluid to enter the torque damper assembly behind the torque damper clutch piston. Damper clutch fluid pressure moves the damper clutch piston against spring force to apply the damper clutch plates. When fully applied, the damper clutch apply plate, the damper clutch plates, and the damper clutch plate assemblies are locked together, forming a direct mechanical connection between the engine flywheel and the transmission input shaft. With the engine flywheel and transmission input shaft locked together, the HPCM is able to use the generator/drive motor - unit A (107, 108) to start the ICE. The torque damper clutch may be applied in any range when the vehicle is operating with the internal combustion engine OFF.

1-3 Reverse Clutch Applies

Pressure Control (PC) Solenoid 4

The PC solenoid 4 is energised (ON) allowing actuator feed limit fluid to enter the PCS 4 signal circuit. PCS 4 signal fluid is then routed through orifice #18 to the 1-3 reverse clutch regulator valve.

1-3 Reverse Clutch Regulator Valve

PCS 4 signal fluid, at the 1-3 reverse clutch regulator valve, opposes 1-3 reverse clutch regulator valve spring force and 13 reverse clutch feedback fluid pressure to regulate line or auxiliary line pressure into the 13 reverse clutch/A cooling feed circuit.

#3 Ball Check Valve

13 reverse clutch feedback fluid unseats the #3 ball check valve, allowing excess pressure to pass into the actuator feed limit circuit. This helps to control clutch apply fluid pressure and clutch apply feel.

Shift Solenoid Valve - Mode A

13 reverse clutch/A cooling feed fluid passes through the shift solenoid valve - mode A and enters the 13 reverse clutch circuit.

1-3 Reverse Clutch Assembly

13 reverse clutch fluid passes through the case and the transmission fluid pump cover into the 1-3 reverse clutch housing and moves the 1-3 reverse clutch piston against spring force to apply the 1-3 reverse clutch plates.

#1 Pressure Switch

Solenoid 2 signal fluid passes through the 1-3 reverse clutch regulator valve into the PS1 fluid passage. PS1 fluid opens the normally closed #1 pressure switch, signalling the TCM that the transmission is in Engine Start.

Shift Accumulation

1-3 Reverse Clutch Accumulator

13 reverse clutch fluid is also sent to the 1-3 reverse clutch accumulator assembly. 13 reverse clutch fluid moves the 1-3 reverse clutch accumulator piston against accumulator spring force to cushion the apply of the 1-3 reverse clutch assembly.

Engine Start

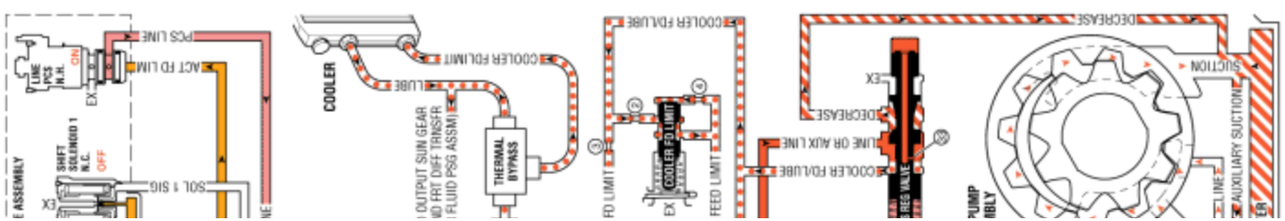

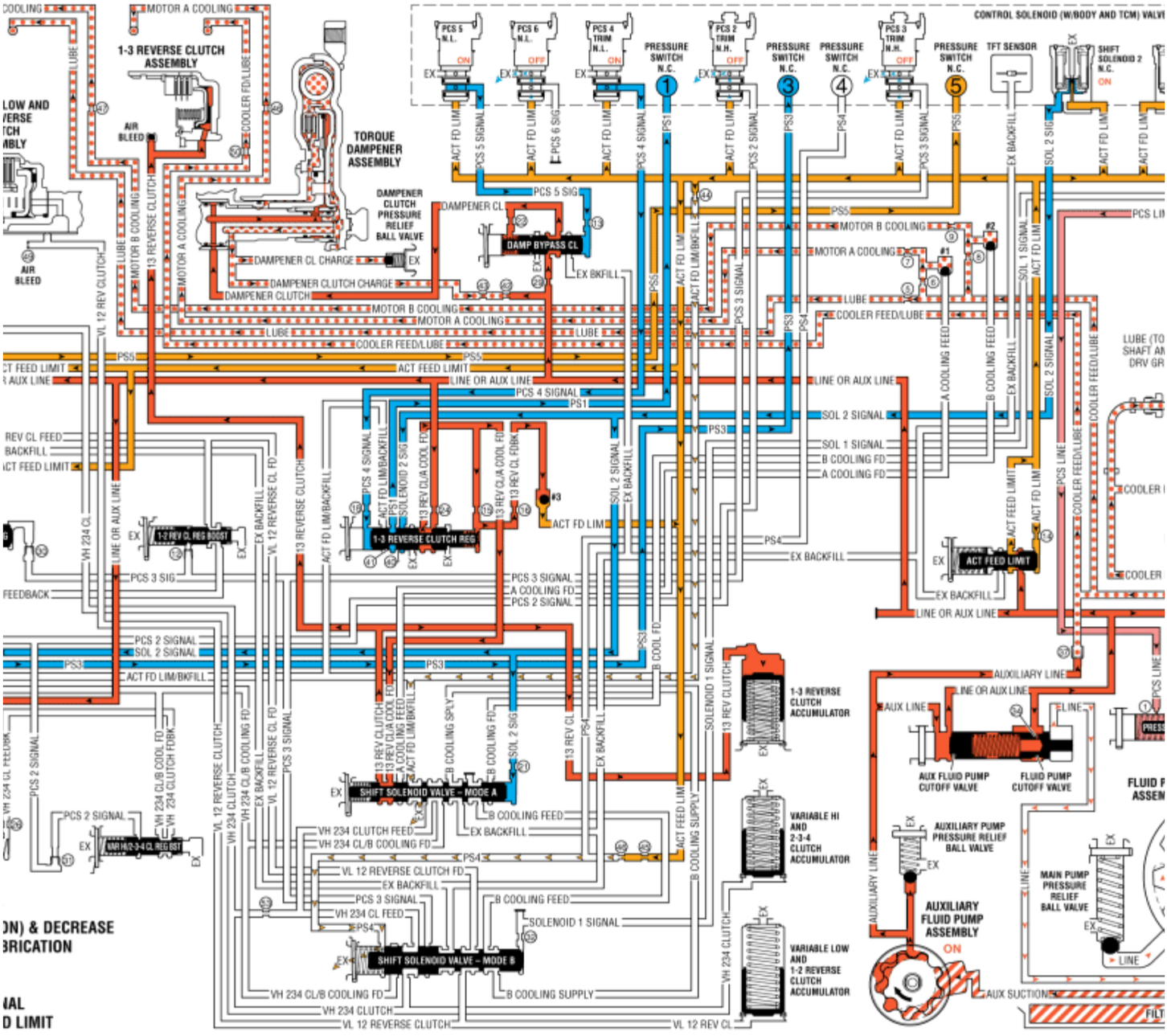

CONTROL SOLENOID (W/BODY AND TCM) VALVE
PCS 5 N.L.
PCS 6 N.L.
PCS 4 TRIM N.L.
PCS 2 TRIM N.H.
PCS 3 TRIM N.H.
PRESSURE SWITCH N.C.
TFT SENSOR
SHIFT SOLENOID 2 N.C.
1-3 REVERSE CLUTCH ASSEMBLY
TORQUE DAMPENER ASSEMBLY
DAMPENER CLUTCH PRESSURE RELIEF BALL VALVE
DAMP BYPASS CL
1-2 REV CL REG BOOST
1-3 REVERSE CLUTCH REG
ACT FEED LIMIT
SHIFT SOLENOID VALVE – MODE A
SHIFT SOLENOID VALVE – MODE B
1-3 REVERSE CLUTCH ACCUMULATOR
VARIABLE HI AND 2-3-4 CLUTCH ACCUMULATOR
VARIABLE LOW AND 1-2 REVERSE CLUTCH ACCUMULATOR
AUX FLUID PUMP CUTOFF VALVE
FLUID PUMP CUTOFF VALVE
AUXILIARY PUMP PRESSURE RELIEF BALL VALVE
AUXILIARY FLUID PUMP ASSEMBLY
MAIN PUMP PRESSURE RELIEF BALL VALVE
AUX SUCTION
MOTOR A COOLING
MOTOR B COOLING
LUBE
COOLER FEED/LUBE
ACT FEED LIMIT
LINE OR AUX LINE
PCS 4 SIGNAL
PCS 3 SIGNAL
PCS 2 SIGNAL
SOL 2 SIGNAL
SOL 1 SIGNAL
B COOLING FD
A COOLING FD
EX BACKFILL
VH 234 CLUTCH FEED
VH 234 CL/B COOLING FD
VL 12 REVERSE CLUTCH FD
VH 234 CL FEED
SOLENOID 1 SIGNAL
B COOLING SUPPLY
VH 234 CLUTCH
VL 12 REVERSE CLUTCH
VL 12 REV CL

© Copyright Chevrolet. All rights reserved

Reverse Output Split Engine Off

When the gear selector lever is moved to the Reverse (R) position (from the Park position), and the internal combustion engine (ICE) is OFF, the following changes occur in the transmission's hydraulic and electrical systems.

Variable Hi and 2-3-4 Clutch Applies

Pressure Control (PC) Solenoid 2

The PC solenoid 2 is energised (ON) allowing actuator feed limit fluid to enter the PCS 2 signal circuit. PCS 2 signal fluid is then routed through orifice #20 to the variable hi and 2-3-4 clutch regulator valve.

Shift Solenoid 1

The shift solenoid 1 is energised (ON) allowing actuator feed limit fluid to enter the solenoid 1 signal fluid circuit. Solenoid 1 signal fluid is then routed through orifice #32 to the shift solenoid valve - mode B.

Variable Hi and 2-3-4 Clutch Regulator Valve

PCS 2 signal fluid, at the variable hi and 2-3-4 clutch regulator valve, opposes variable hi and 2-3-4 clutch regulator valve spring force and VH 234 clutch feedback fluid pressure to regulate line or auxiliary line pressure into the VH 234 clutch/B cooling feed circuit.

Variable Hi and 2-3-4 Clutch Boost Valve

PCS 2 signal fluid pressure acts on a differential area of the variable hi and 2-3-4 clutch boost valve, moving the valve against variable hi and 2-3-4 clutch boost valve spring force to regulate VH 234 clutch/B cooling feed fluid into the VH 234 clutch feedback circuit. As PCS 2 signal fluid pressure is increased to a given value, the variable hi and 2-3-4 clutch boost valve opens the VH 234 clutch feedback circuit to exhaust. This results in the variable hi and 2-3-4 clutch regulator valve moving to the full feed position, sending full VH 234 clutch feed pressure (full line pressure) to the variable hi and 2-3-4 clutch.

Shift Solenoid Valve - Mode A

VH 234 clutch/B cooling feed fluid passes through the shift solenoid valve - mode A into the B cooling supply circuit and is routed to the shift solenoid valve - mode B.

Shift Solenoid Valve - Mode B

Solenoid 1 signal fluid moves the shift solenoid valve - B, against spring force, to the applied position. VH 234 clutch/B cooling feed fluid passes through the valve into the VH 234 clutch circuit and is routed to the variable hi and 2-3-4 clutch assembly.

Variable Hi and 2-3-4 Clutch Assembly

VH 234 clutch fluid is directed to the variable hi and 2-3-4 clutch piston to apply the variable hi and 2-3-4 clutch plates and achieve Reverse - Output Split.

Shift Accumulation

Variable Hi and 2-3-4 Clutch Accumulator

VH 234 clutch fluid is also sent to the variable hi and 2-3-4 clutch accumulator assembly. VH 234 clutch fluid moves the variable hi and 2-3-4 clutch accumulator piston against accumulator spring force to cushion the application of the variable hi and 2-3-4 clutch assembly.

Reverse Output Split Engine Off

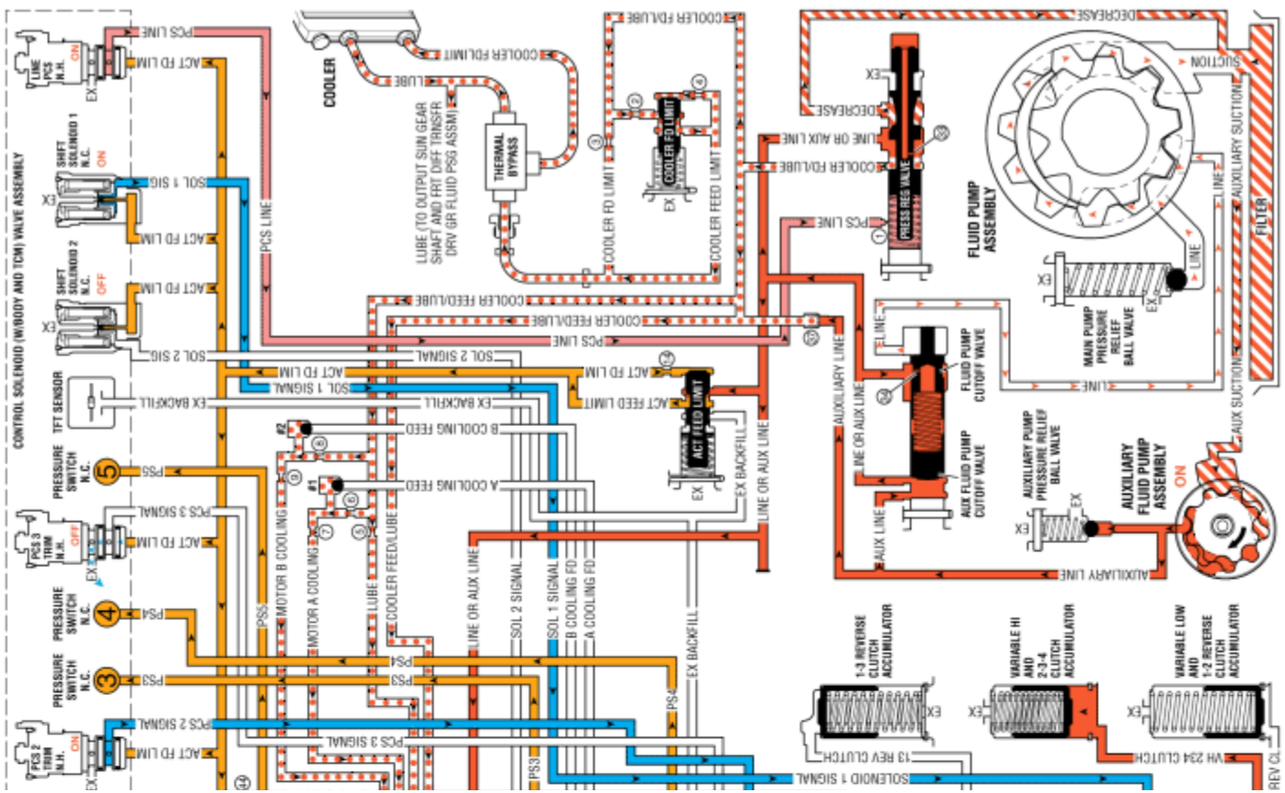

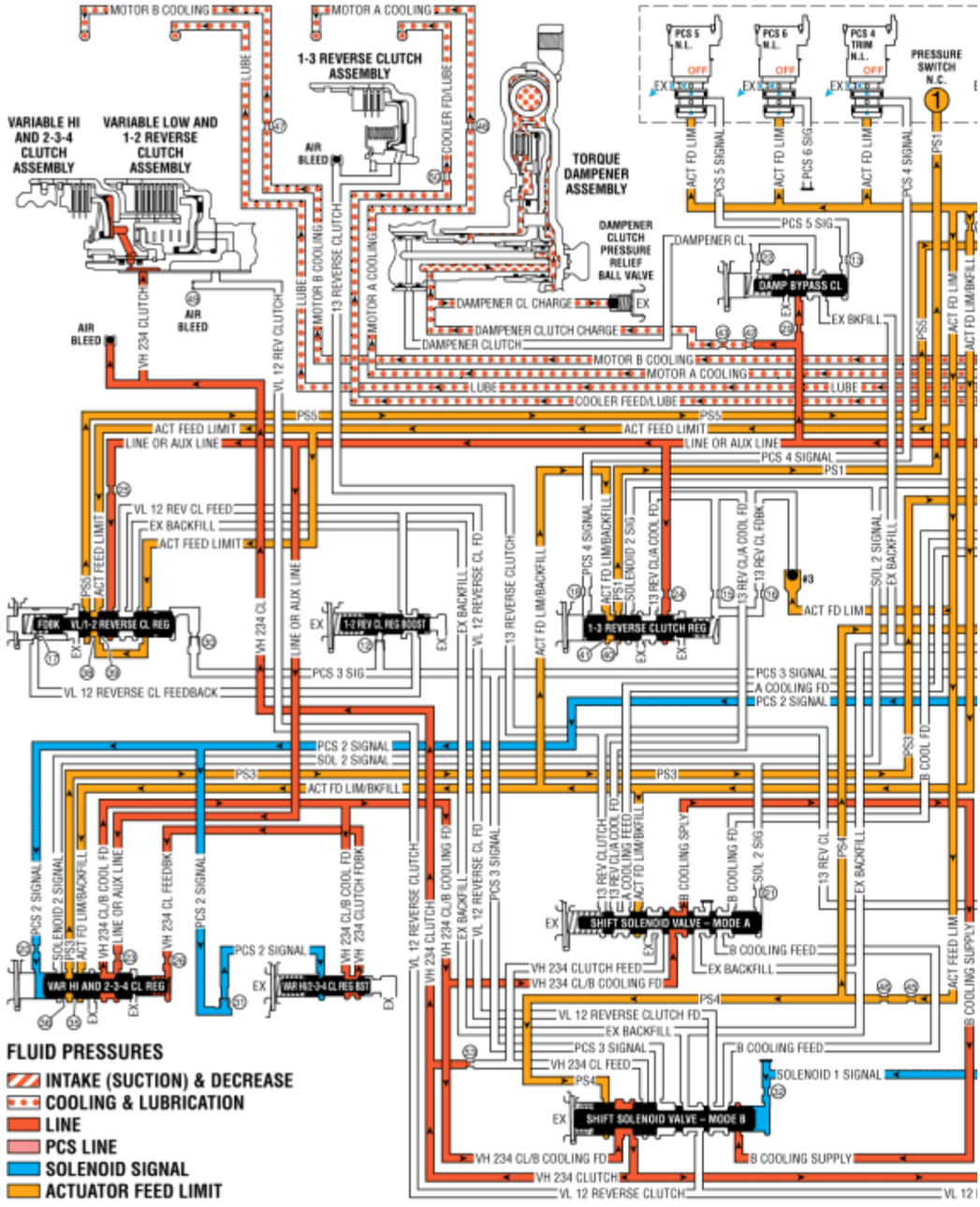

© Copyright Chevrolet. All rights reserved

Reverse Output Split Engine On

When the transmission is operating in Reverse - Output Split (R), and the HPCM determines that operating conditions are appropriate, the internal combustion engine (ICE) is started, the auxiliary fluid pump is turned OFF, and the main fluid pump provides hydraulic fluid pressure (refer to Engine Start). After Engine Start, the following changes would occur to the transmission's hydraulic and electrical systems.

1-3 Reverse Clutch Remains Applied

The 1-3 reverse clutch is applied for Engine Start, and remains applied for Reverse - Output Split (Engine ON).

Pressure Control (PC) Solenoid 4

The PC solenoid 4 is energised (ON) allowing actuator feed limit fluid to enter the PCS 4 signal circuit. PCS 4 signal fluid is then routed through orifice #18 to the 1-3 reverse clutch regulator valve.

Shift Solenoid 2

The shift solenoid 2 is energised (ON) allowing actuator feed limit fluid to enter the solenoid 2 signal fluid circuit. Solenoid 2 signal fluid is routed through orifice #21 to the shift solenoid valve - mode A. Solenoid 2 signal fluid is also routed to the variable hi and 2-3-4 clutch regulator valve, and to the 1-3 reverse clutch regulator valve where it enters the PS1 fluid circuit.

1-3 Reverse Clutch Regulator Valve

PCS 4 signal fluid, at the 1-3 reverse clutch regulator valve, opposes 1-3 reverse clutch regulator valve spring force and 13 reverse clutch feedback fluid pressure to regulate line or auxiliary line pressure into the 13 reverse clutch/A cooling feed circuit.

#3 Ball Check Valve

13 reverse clutch feedback fluid unseats the #3 ball check valve, allowing excess pressure to pass into the actuator feed limit circuit. This helps to control clutch apply fluid pressure and clutch apply feel.

Shift Solenoid Valve - Mode A

Solenoid 2 signal fluid moves the shift solenoid valve - A, against spring force, to the applied position. 13 reverse clutch/A cooling feed fluid passes through the shift solenoid

valve - mode A and enters the 13 reverse clutch circuit.

1-3 Reverse Clutch Assembly

13 reverse clutch fluid passes through the case and the transmission fluid pump cover into the 1-3 reverse clutch housing and moves the 1-3 reverse clutch piston against spring force to apply the 1-3 reverse clutch plates.

#1 Pressure Switch

Solenoid 2 signal fluid passes through the 1-3 reverse clutch regulator valve into the PS1 fluid passage. PS1 fluid opens the normally closed #1 pressure switch, signalling the TCM that the transmission is in Reverse - Output Split.

Torque Damper Clutch Releases

Pressure Control (PC) Solenoid 5

The PC solenoid 5 is de-energised (OFF) allowing PCS 5 signal fluid to exhaust from the damper bypass clutch valve.

Torque Damper Clutch Assembly

Damper clutch fluid exhausts from the torque damper clutch assembly to the damper bypass clutch valve allowing the torque damper clutch to release.

Damper Bypass Clutch Valve

Damper bypass clutch valve spring force moves the damper bypass clutch valve to the released position, allowing damper clutch fluid pressure to exhaust through the valve into the exhaust backfill circuit.

Transmission Fluid Temperature (TFT) Sensor

Damper clutch fluid pressure in the exhaust backfill circuit exhausts at the TFT sensor.

Variable Hi and 2-3-4 Clutch Remains Applied

Variable Hi and 2-3-4 Clutch Assembly

When the transmission is operating in Reverse - Output Split, and the engine is ON, the variable hi and 2-3-4 clutch remains applied. The routing of apply fluid to the variable hi and 2-3-4 clutch is similar to that described for Reverse - Output Split (Engine OFF), with the exception that VH 234 clutch/B cooling feed fluid passes through the applied shift solenoid valve - mode A into the VH 234 clutch feed circuit.

Shift Accumulation

1-3 Reverse Clutch Accumulator

13 reverse clutch fluid is also sent to the 1-3 reverse clutch accumulator assembly. 13 reverse clutch fluid moves the 1-3 reverse clutch accumulator piston against accumulator spring force to cushion the apply of the 1-3 reverse clutch assembly.

Variable Hi and 2-3-4 Clutch Accumulator

VH 234 clutch fluid is also sent to the variable hi and 2-3-4 clutch accumulator assembly. VH 234 clutch fluid moves the variable hi and 2-3-4 clutch accumulator piston against accumulator spring force to cushion the application of the variable hi and 2-3-4 clutch assembly.

Reverse Output Split Engine On

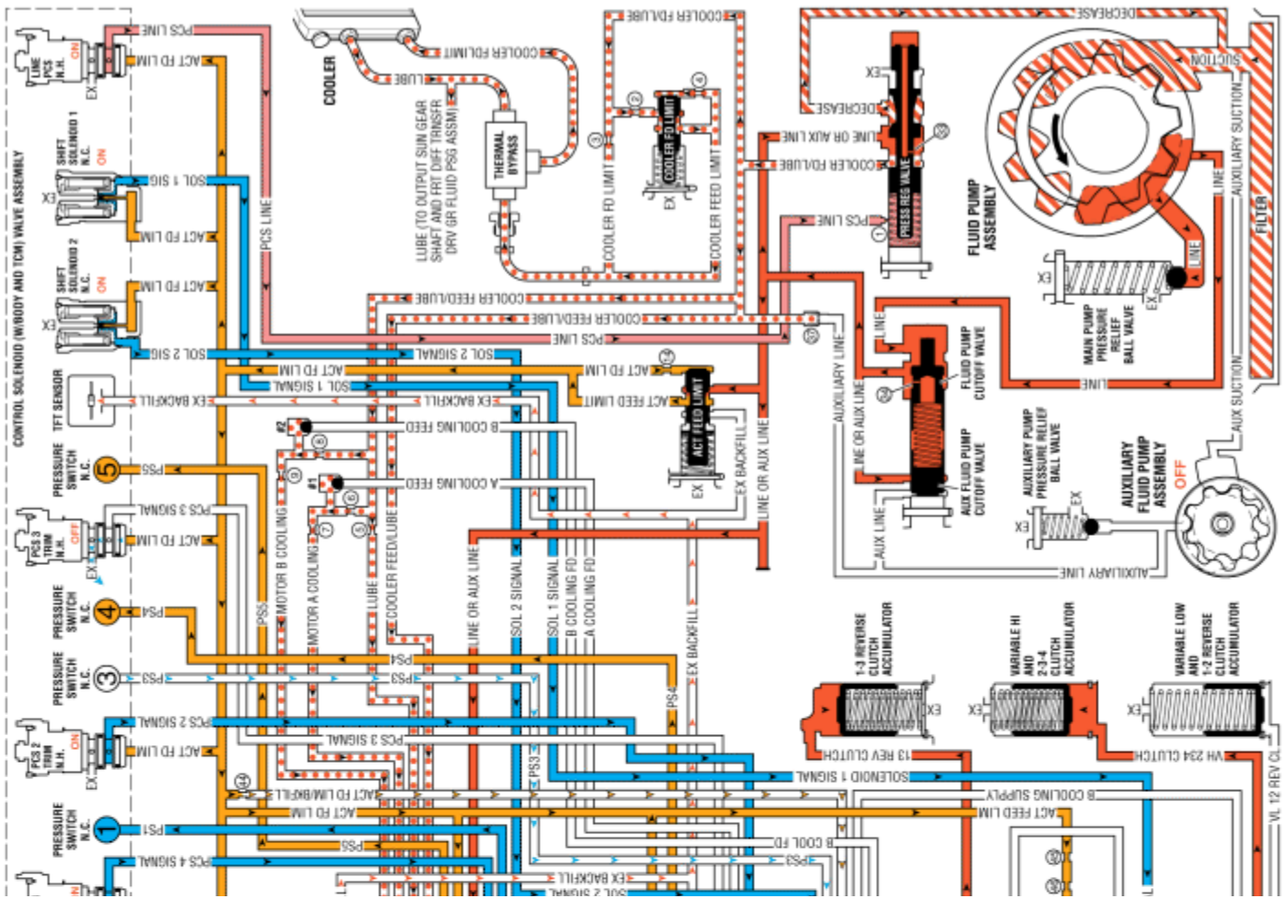

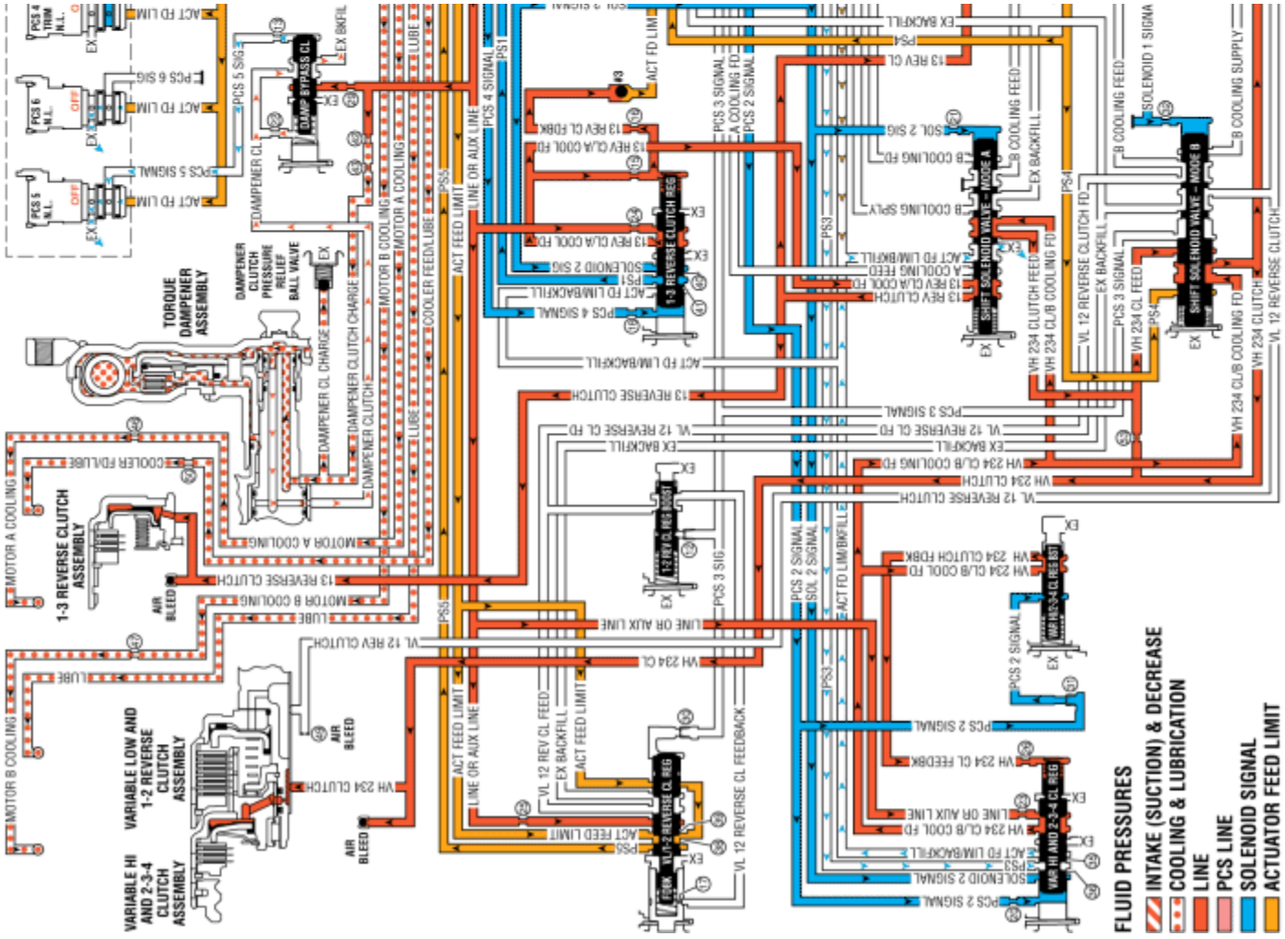

© Copyright Chevrolet. All rights reserved

Reverse Series Mode Engine Off

When the transmission is operating in Reverse - Output Split (R) and the internal combustion engine is OFF, and the HPCM determines that operating conditions are appropriate, Reverse - Series Mode is commanded and the following changes occur in the transmission's hydraulic and electrical systems.

Variable Low and 1-2 Reverse Clutch Applies

Pressure Control (PC) Solenoid 3

The PC solenoid 3 is energised (ON) allowing actuator feed limit fluid to enter the PCS 3 signal circuit. PCS 3 signal fluid is then routed through orifice #30 to the variable low and 1-2 reverse clutch regulator valve; through orifice #12 to the variable low and 1-2 reverse clutch boost valve; and to the shift solenoid valve - mode B.

Shift Solenoid 1

The shift solenoid 1 is commanded OFF, allowing solenoid 1 signal fluid to exhaust. When solenoid 1 signal fluid exhausts, the shift solenoid valve - mode B moves to the released position.

Variable Low and 1-2 Reverse Clutch Regulator Valve

PCS 3 signal fluid, at the variable low and 1-2 reverse clutch regulator valve, opposes variable low and 1-2 reverse clutch regulator valve spring force and VL 12 reverse clutch feedback fluid pressure to regulate line or auxiliary line pressure into the VL 12 reverse clutch feed circuit.

Variable Low and 1-2 Reverse Clutch Boost Valve

PCS 3 signal fluid pressure acts on a differential area of the variable low and 1-2 reverse clutch boost valve, moving the valve against variable low and 1-2 reverse clutch boost valve spring force to regulate VL 12 reverse clutch feed fluid into the VL 12 reverse clutch feedback circuit. As PCS 3 signal fluid pressure is increased to a given value, the variable low and 1-2 reverse clutch boost valve opens the VL 1-2 reverse clutch feedback circuit to exhaust. This results in the variable low and 1-2 reverse clutch regulator valve moving to the full feed position, sending full VL 12 reverse clutch feed pressure (full line pressure) to the variable low and 1-2 reverse clutch.

Shift Solenoid Valve - Mode B

VL 12 reverse clutch feed fluid is routed to the shift solenoid valve - mode B, where it passes through the valve into the VL 12 reverse clutch circuit.

Variable Low and 1-2 Reverse Clutch Assembly

VL 12 reverse clutch fluid pressure enters the case assembly behind the variable low and 1-2 reverse clutch piston and moves the piston against spring force to apply the variable low and 1-2 reverse clutch plates.

Variable Hi and 2-3-4 Clutch Releases

Pressure Control (PC) Solenoid 2

The PC solenoid 2 is commanded OFF, allowing PCS 2 signal fluid to exhaust from the variable hi and 2-3-4 clutch regulator valve and the variable hi and 2-3-4 clutch boost valve.

Variable Hi and 2-3-4 Clutch Assembly

VH 234 clutch fluid pressure is exhausted from the case assembly, allowing variable hi and 2-3-4 clutch spring force to move the variable hi and 2-3-4 clutch piston and release the variable hi and 2-3-4 clutch plates.

Shift Solenoid Valve - Mode B

Exhausting VH 234 clutch fluid pressure passes through the shift solenoid valve - mode B into the 234 clutch feed circuit.

Shift Solenoid Valve - Mode A

Exhausting 234 clutch feed fluid pressure passes through the shift solenoid valve - mode A into the VH 234 clutch/B cooling feed circuit.

Variable Hi and 2-3-4 Clutch Regulator Valve

Variable hi and 2-3-4 clutch regulator valve spring force moves the variable hi and 2-3-4 clutch regulator valve to the released position, allowing VH 234 clutch/B cooling feed fluid pressure to exhaust.

Shift Accumulation

Variable Low and 1-2 Reverse Clutch Accumulator

VL 12 reverse clutch fluid is also sent to the variable low and 1-2 reverse clutch accumulator assembly. VL 12 reverse clutch fluid moves the variable low and 1-2 reverse clutch accumulator piston against accumulator spring force to cushion the apply of the variable low and 1-2 reverse clutch assembly.

Variable Hi and 2-3-4 Clutch Accumulator

VH 234 clutch fluid also exhausts from the variable hi and 2-3-4 clutch accumulator assembly. Accumulator spring force moves the variable hi and 2-3-4 clutch accumulator

piston to the released position.

Reverse Series Mode Engine Off

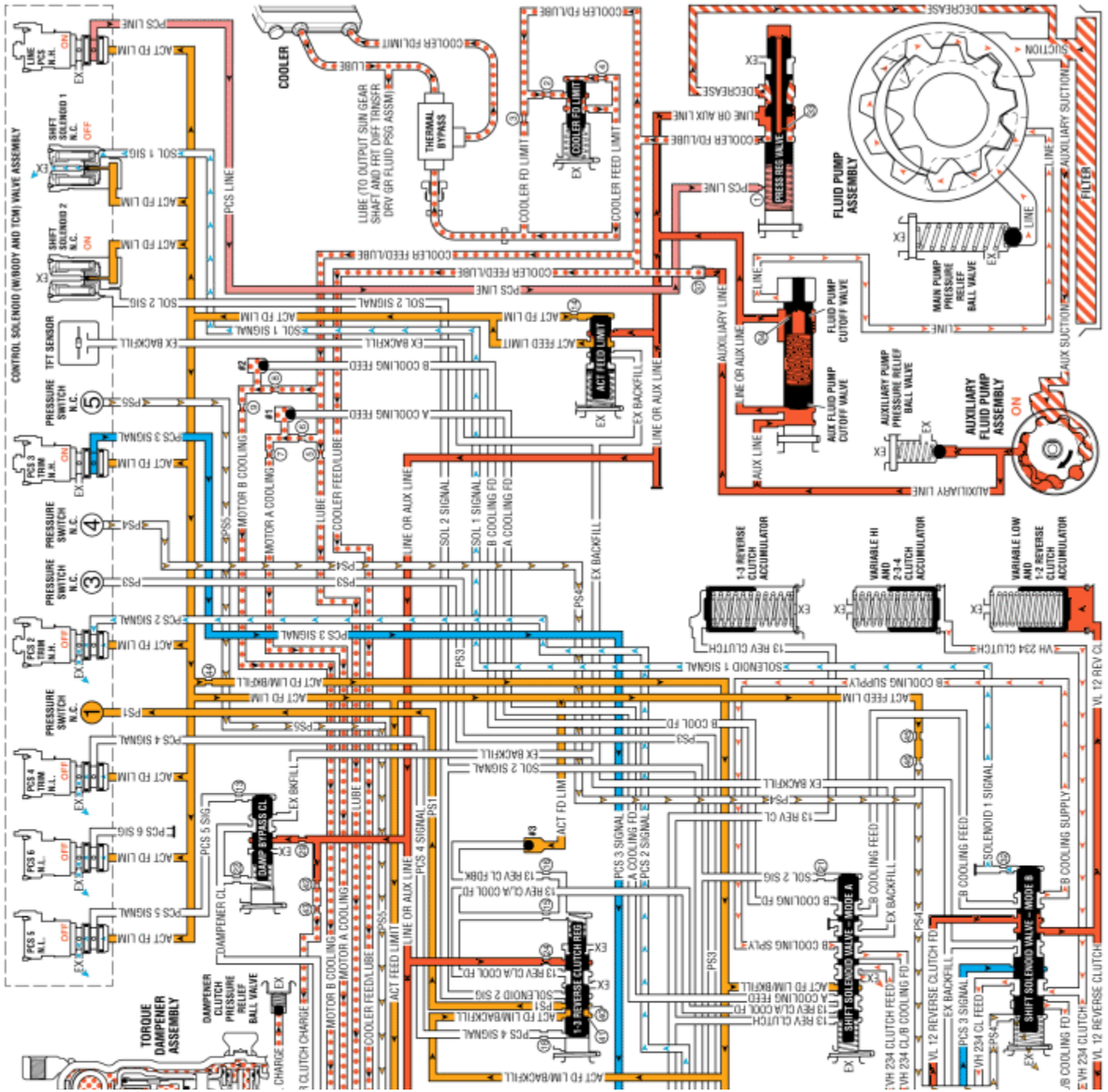

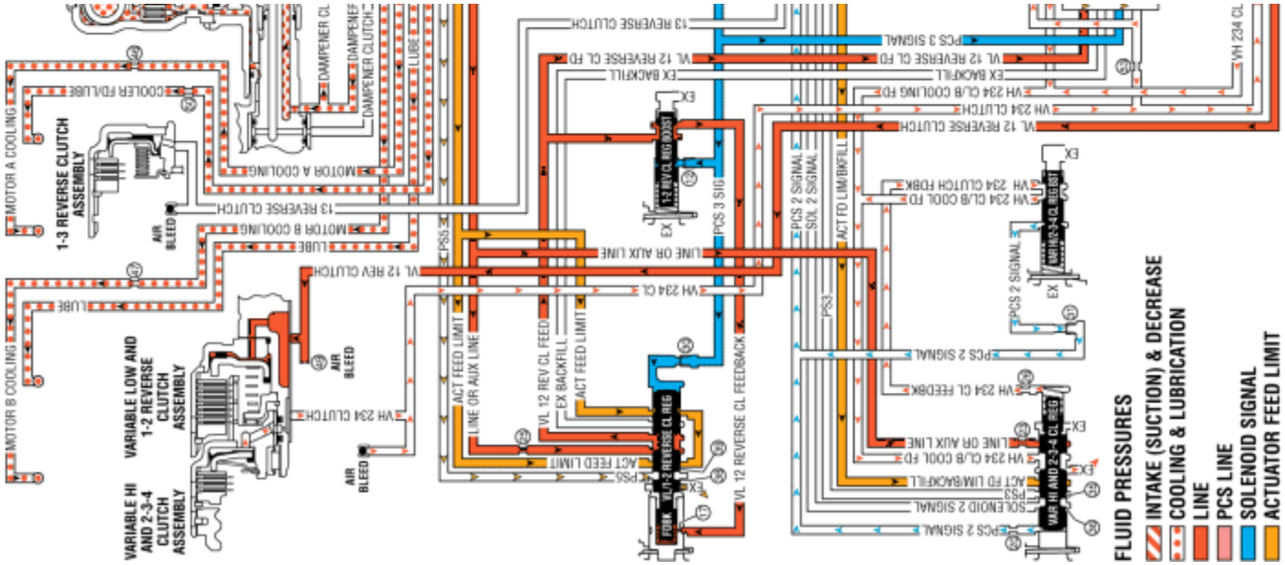

© Copyright Chevrolet. All rights reserved

Reverse Series Mode Engine On

When the transmission is operating in Reverse - Series Mode (R), and the HPCM determines that operating conditions are appropriate, the internal combustion engine (ICE) is started, the auxiliary fluid pump is turned OFF, and the main fluid pump provides hydraulic fluid pressure (refer to Engine Start). After Engine Start, the following changes would occur to the transmission's hydraulic and electrical systems.

1-3 Reverse Clutch Remains Applied

The 1-3 reverse clutch is applied for Engine Start, and remains applied for Reverse - Series Mode (Engine ON).

Pressure Control (PC) Solenoid 4

The PC solenoid 4 is energised (ON) allowing actuator feed limit fluid to enter the PCS 4 signal circuit. PCS 4 signal fluid is then routed through orifice #18 to the 1-3 reverse clutch regulator valve.

Shift Solenoid 2

The shift solenoid 2 is energised (ON) allowing actuator feed limit fluid to enter the solenoid 2 signal fluid circuit. Solenoid 2 signal fluid is routed through orifice #21 to the shift solenoid valve - mode A. Solenoid 2 signal fluid is also routed to the variable hi and 2-3-4 clutch regulator valve, and to the 1-3 reverse clutch regulator valve.

1-3 Reverse Clutch Regulator Valve

PCS 4 signal fluid, at the 1-3 reverse clutch regulator valve, opposes 1-3 reverse clutch regulator valve spring force and 13 reverse clutch feedback fluid pressure to regulate line or auxiliary line pressure into the 13 reverse clutch/A cooling feed circuit.

#3 Ball Check Valve

13 reverse clutch feedback fluid unseats the #3 ball check valve, allowing excess pressure to pass into the actuator feed limit circuit. This helps to control clutch apply fluid pressure and clutch apply feel.

Shift Solenoid Valve - Mode A

13 reverse clutch/A cooling feed fluid passes through the shift solenoid valve - mode A and enters the 13 reverse clutch circuit.

1-3 Reverse Clutch Assembly

13 reverse clutch fluid passes through the case and the transmission fluid pump cover into the 1-3 reverse clutch housing and moves the 1-3 reverse clutch piston against spring force to apply the 1-3 reverse clutch plates.

#1 Pressure Switch

Solenoid 2 signal fluid passes through the 1-3 reverse clutch regulator valve into the PS1 fluid passage. PS1 fluid opens the normally closed #1 pressure switch, signalling the TCM that the transmission is in Reverse - Series Mode.

#3 Pressure Switch

Solenoid 2 signal fluid passes through the variable hi and 2-3-4 clutch regulator valve into the PS3 fluid passage. PS3 fluid opens the normally closed #3 pressure switch, signalling the TCM that the transmission is in Reverse - Series Mode.

Torque Damper Clutch Releases

Pressure Control (PC) Solenoid 5

The PC solenoid 5 is de-energised (OFF) allowing PCS 5 signal fluid to exhaust from the damper bypass clutch valve.

Torque Damper Clutch Assembly

Damper clutch fluid exhausts from the torque damper clutch assembly to the damper bypass clutch valve allowing the torque damper clutch to release.

Damper Bypass Clutch Valve

Damper bypass clutch valve spring force moves the damper bypass clutch valve to the released position, allowing damper clutch fluid pressure to exhaust through the valve into the exhaust backfill circuit.

Transmission Fluid Temperature (TFT) Sensor

Damper clutch fluid pressure in the exhaust backfill circuit exhausts at the TFT sensor.

Variable Low and 1-2 Reverse Clutch Remains Applied

Variable Low and 1-2 Reverse Clutch Assembly

With the exception of the switch to line fluid pressure from the main fluid pump assembly, no other changes occur to the variable low and 1-2 reverse clutch fluid circuit and

the variable low and 1-2 reverse clutch remains applied.

Variable Hi and 2-3-4 Clutch Releases

Pressure Control (PC) Solenoid 2

The PC solenoid 2 is commanded OFF, allowing PCS 2 signal fluid to exhaust from the variable hi and 2-3-4 clutch regulator valve and the variable hi and 2-3-4 clutch boost valve.

Variable Hi and 2-3-4 Clutch Assembly

VH 234 clutch fluid pressure is exhausted from the case assembly, allowing variable hi and 2-3-4 clutch spring force to move the variable hi and 2-3-4 clutch piston and release the variable hi and 2-3-4 clutch plates.

Shift Solenoid Valve - Mode B

Exhausting VH 234 clutch fluid pressure passes through the shift solenoid valve - mode B into the 234 clutch feed circuit.

Shift Solenoid Valve - Mode A

Exhausting 234 clutch feed fluid pressure passes through the shift solenoid valve - mode A into the VH 234 clutch/B cooling feed circuit.

Variable Hi and 2-3-4 Clutch Regulator Valve

Variable hi and 2-3-4 clutch regulator valve spring force moves the variable hi and 2-3-4 clutch regulator valve to the released position, allowing VH 234 clutch/B cooling feed fluid pressure to exhaust.

Shift Accumulation

1-3 Reverse Clutch Accumulator

13 reverse clutch fluid is also sent to the 1-3 reverse clutch accumulator assembly. 13 reverse clutch fluid moves the 1-3 reverse clutch accumulator piston against accumulator spring force to cushion the apply of the 1-3 reverse clutch assembly.

Variable Low and 1-2 Reverse Clutch Accumulator

VL 12 reverse clutch fluid is also sent to the variable low and 1-2 reverse clutch accumulator assembly. VL 12 reverse clutch fluid moves the variable low and 1-2 reverse clutch accumulator piston against accumulator spring force to cushion the apply of the variable low and 1-2 reverse clutch assembly.

Variable Hi and 2-3-4 Clutch Accumulator

VH 234 clutch fluid also exhausts from the variable hi and 2-3-4 clutch accumulator assembly. Accumulator spring force moves the variable hi and 2-3-4 clutch accumulator piston to the released position.

Reverse Series Mode Engine On

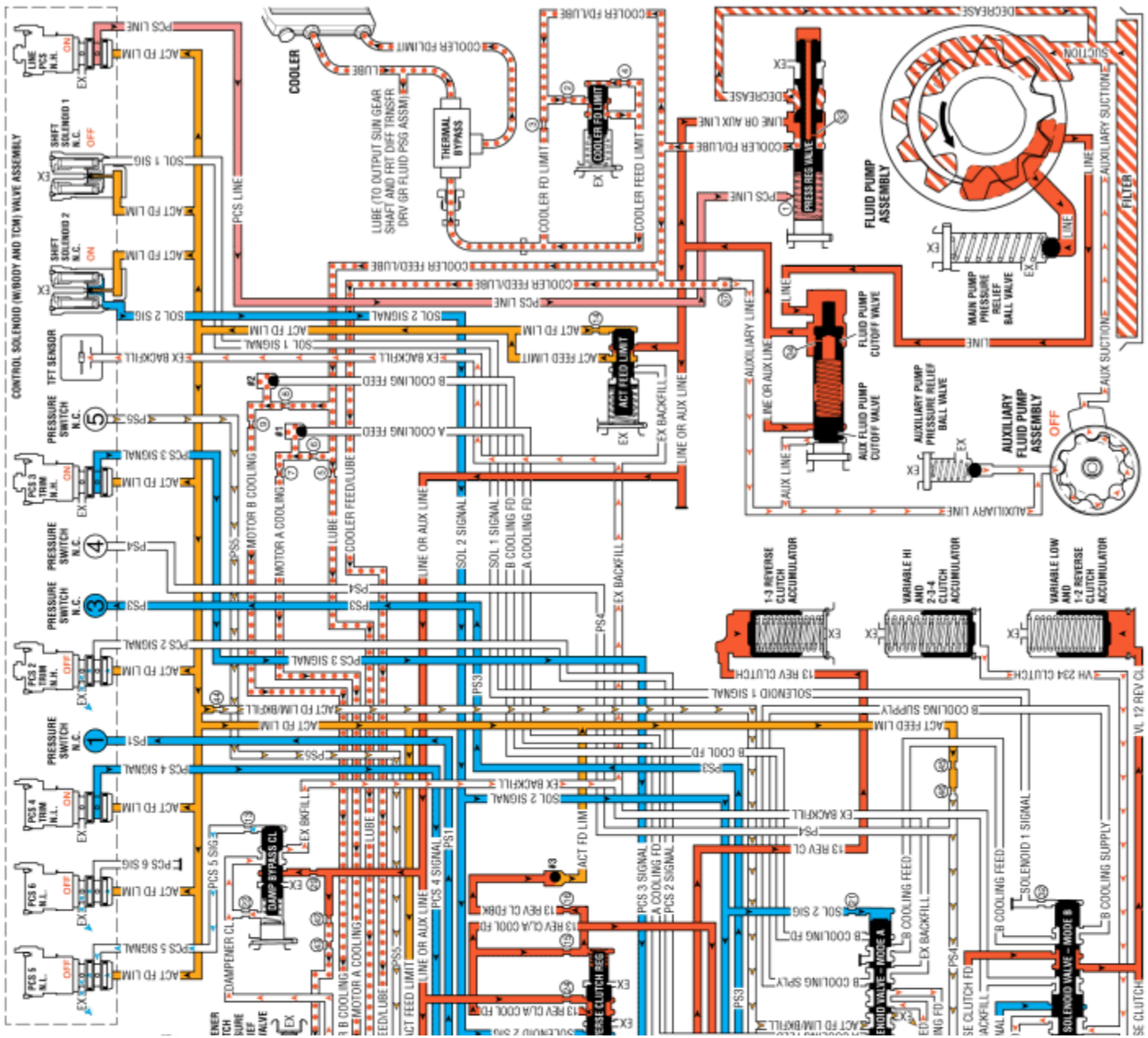

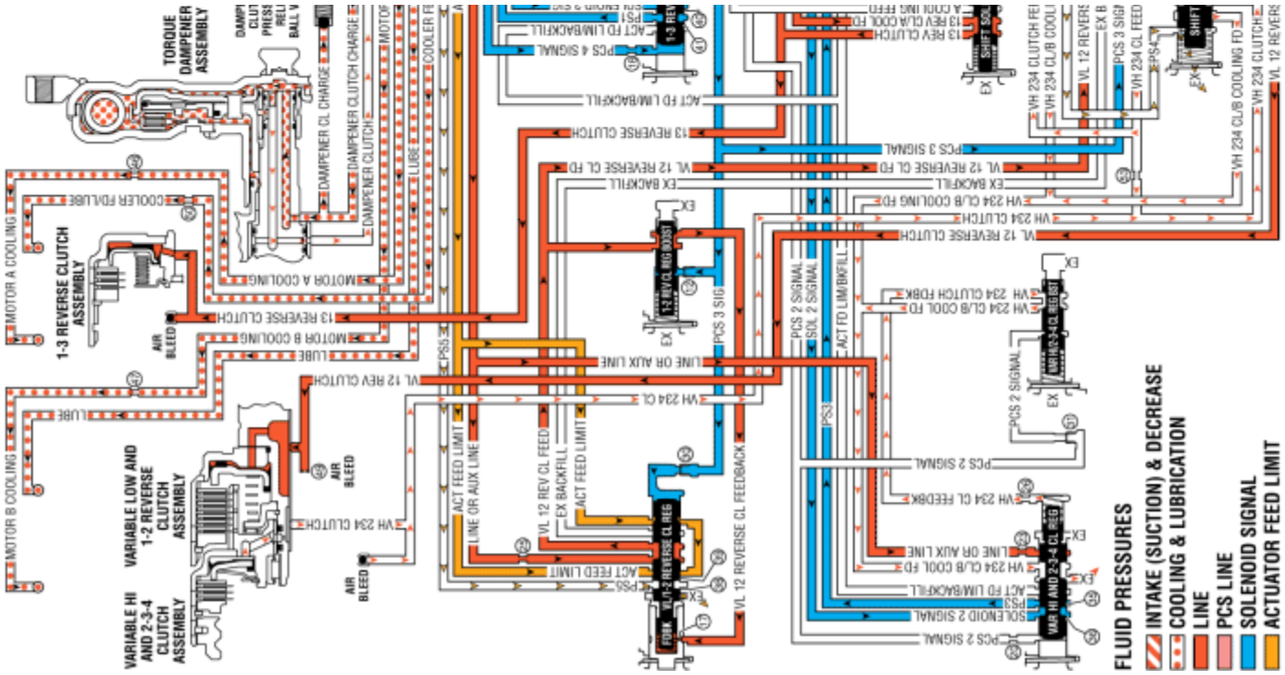

© Copyright Chevrolet. All rights reserved

Drive Series Mode Engine Off

When the gear selector lever is moved to the Drive (D) position from the Neutral (N) position, and the internal combustion engine (ICE) is OFF, the following changes occur in the transmission's hydraulic and electrical systems in order to start the vehicle moving from a stopped position.

Variable Low and 1-2 Reverse Clutch Applies

Pressure Control (PC) Solenoid 3

The PC solenoid 3 is energised (ON) allowing actuator feed limit fluid to enter the PCS 3 signal circuit. PCS 3 signal fluid is then routed through orifice #30 to the variable low and 1-2 reverse clutch regulator valve; through orifice #12 to the variable low and 1-2 reverse clutch boost valve; and to the shift solenoid valve - mode B.

Variable Low and 1-2 Reverse Clutch Regulator Valve

PCS 3 signal fluid, at the variable low and 1-2 reverse clutch regulator valve, opposes variable low and 1-2 reverse clutch regulator valve spring force and VL 12 reverse clutch feedback fluid pressure to regulate line or auxiliary line pressure into the VL 12 reverse clutch feed circuit.

Variable Low and 1-2 Reverse Clutch Boost Valve

PCS 3 signal fluid pressure acts on a differential area of the variable low and 1-2 reverse clutch boost valve, moving the valve against variable low and 1-2 reverse clutch boost valve spring force to regulate VL 12 reverse clutch feed fluid into the VL 12 reverse clutch feedback circuit. As PCS 3 signal fluid pressure is increased to a given value, the variable low and 1-2 reverse clutch boost valve opens the VL 1-2 reverse clutch feedback circuit to exhaust. This results in the variable low and 1-2 reverse clutch regulator valve moving to the full feed position, sending full VL 12 reverse clutch feed pressure (full line pressure) to the variable low and 1-2 reverse clutch.

Shift Solenoid Valve - Mode B

VL 12 reverse clutch feed fluid is routed to the shift solenoid valve - mode B, where it passes through the valve into the VL 12 reverse clutch circuit.

Variable Low and 1-2 Reverse Clutch Assembly

VL 12 reverse clutch fluid pressure enters the case assembly behind the variable low and 1-2 reverse clutch piston and moves the piston against spring force to apply the variable low and 1-2 reverse clutch plates.

Shift Accumulation

Variable Low and 1-2 Reverse Clutch Accumulator

VL 12 reverse clutch fluid is also sent to the variable low and 1-2 reverse clutch accumulator assembly. VL 12 reverse clutch fluid moves the variable low and 1-2 reverse clutch accumulator piston against accumulator spring force to cushion the apply of the variable low and 1-2 reverse clutch assembly.

Drive Series Mode Engine Off

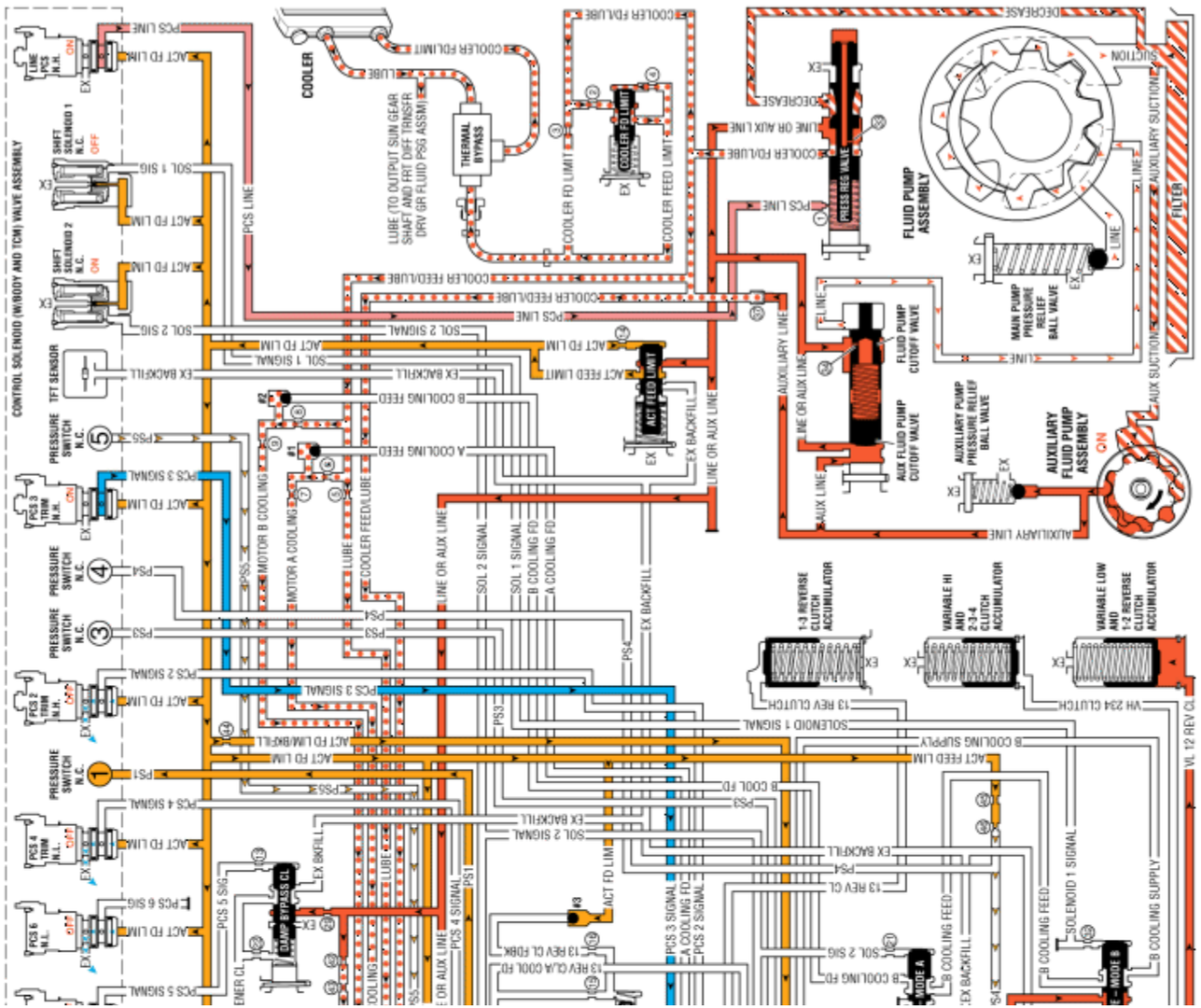

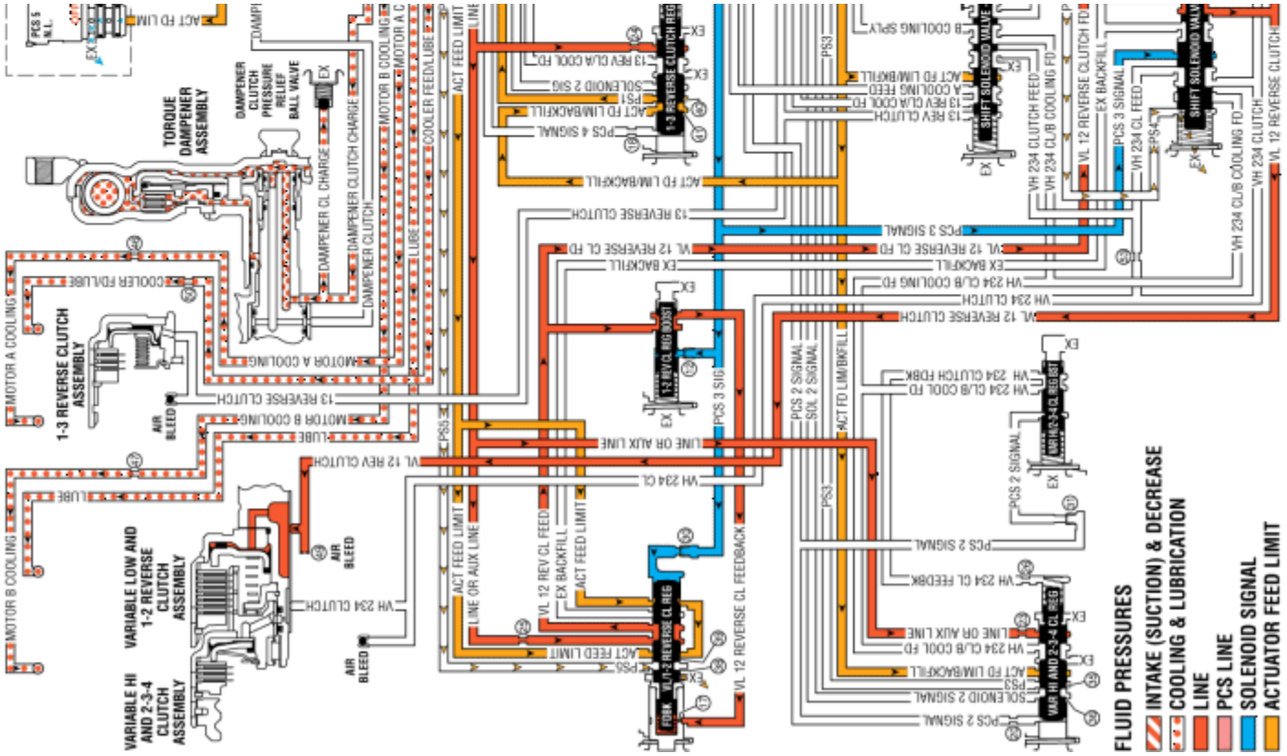

© Copyright Chevrolet. All rights reserved

Drive Series Mode Engine On

When the gear selector lever is moved to the Drive (D) position from the Neutral (N) position, and the HPCM determines that operating conditions are appropriate, the internal combustion engine (ICE) is started, the auxiliary fluid pump is turned OFF, and the main fluid pump provides hydraulic fluid pressure (refer to Engine Start). After Engine Start, the following changes would occur to the transmission's hydraulic and electrical systems in order to start the vehicle moving from a stopped position.

1-3 Reverse Clutch Remains Applied

The 1-3 reverse clutch is applied for Engine Start, and remains applied for Reverse - Series Mode (Engine ON).

Pressure Control (PC) Solenoid 4

The PC solenoid 4 is energised (ON) allowing actuator feed limit fluid to enter the PCS 4 signal circuit. PCS 4 signal fluid is then routed through orifice #18 to the 1-3 reverse clutch regulator valve.

Shift Solenoid 2

The shift solenoid 2 is energised (ON) allowing actuator feed limit fluid to enter the solenoid 2 signal fluid circuit. Solenoid 2 signal fluid is routed through orifice #21 to the shift solenoid valve - mode A. Solenoid 2 signal fluid is also routed to the variable hi and 2-3-4 clutch regulator valve, and to the 1-3 reverse clutch regulator valve.

1-3 Reverse Clutch Regulator Valve

PCS 4 signal fluid, at the 1-3 reverse clutch regulator valve, opposes 1-3 reverse clutch regulator valve spring force and 13 reverse clutch feedback fluid pressure to regulate line or auxiliary line pressure into the 13 reverse clutch/A cooling feed circuit.

#3 Ball Check Valve

13 reverse clutch feedback fluid unseats the #3 ball check valve, allowing excess pressure to pass into the actuator feed limit circuit. This helps to control clutch apply fluid pressure and clutch apply feel.

Shift Solenoid Valve - Mode A

13 reverse clutch/A cooling feed fluid passes through the shift solenoid valve - mode A and enters the 13 reverse clutch circuit.

1-3 Reverse Clutch Assembly

13 reverse clutch fluid passes through the case and the transmission fluid pump cover into the 1-3 reverse clutch housing and moves the 1-3 reverse clutch piston against spring force to apply the 1-3 reverse clutch plates.

#1 Pressure Switch

Solenoid 2 signal fluid passes through the 1-3 reverse clutch regulator valve into the PS1 fluid passage. PS1 fluid opens the normally closed #1 pressure switch, signalling the TCM that the transmission is in Drive - Series Mode.

#3 Pressure Switch

Solenoid 2 signal fluid passes through the variable hi and 2-3-4 clutch regulator valve into the PS3 fluid passage. PS3 fluid opens the normally closed #3 pressure switch, signalling the TCM that the transmission is in Drive - Series Mode.

Torque Damper Clutch Releases

Pressure Control (PC) Solenoid 5

The PC solenoid 5 is de-energised (OFF) allowing PCS 5 signal fluid to exhaust from the damper bypass clutch valve.

Torque Damper Clutch Assembly

Damper clutch fluid exhausts from the torque damper clutch assembly to the damper bypass clutch valve allowing the torque damper clutch to release.

Damper Bypass Clutch Valve

Damper bypass clutch valve spring force moves the damper bypass clutch valve to the released position, allowing damper clutch fluid pressure to exhaust through the valve into the exhaust backfill circuit.

Transmission Fluid Temperature (TFT) Sensor

Damper clutch fluid pressure in the exhaust backfill circuit exhausts at the TFT sensor.

Variable Low and 1-2 Reverse Clutch Remains Applied

Variable Low and 1-2 Reverse Clutch Assembly

With the exception of the switch to line fluid pressure from the main fluid pump assembly, no other changes occur to the variable low and 1-2 reverse clutch fluid circuit and

the variable low and 1-2 reverse clutch remains applied.

Shift Accumulation

1-3 Reverse Clutch Accumulator

13 reverse clutch fluid is also sent to the 1-3 reverse clutch accumulator assembly. 13 reverse clutch fluid moves the 1-3 reverse clutch accumulator piston against accumulator spring force to cushion the apply of the 1-3 reverse clutch assembly

Variable Low and 1-2 Reverse Clutch Accumulator

VL 12 reverse clutch fluid is also sent to the variable low and 1-2 reverse clutch accumulator assembly. VL 12 reverse clutch fluid moves the variable low and 1-2 reverse clutch accumulator piston against accumulator spring force to cushion the apply of the variable low and 1-2 reverse clutch assembly.

Drive Series Mode Engine On

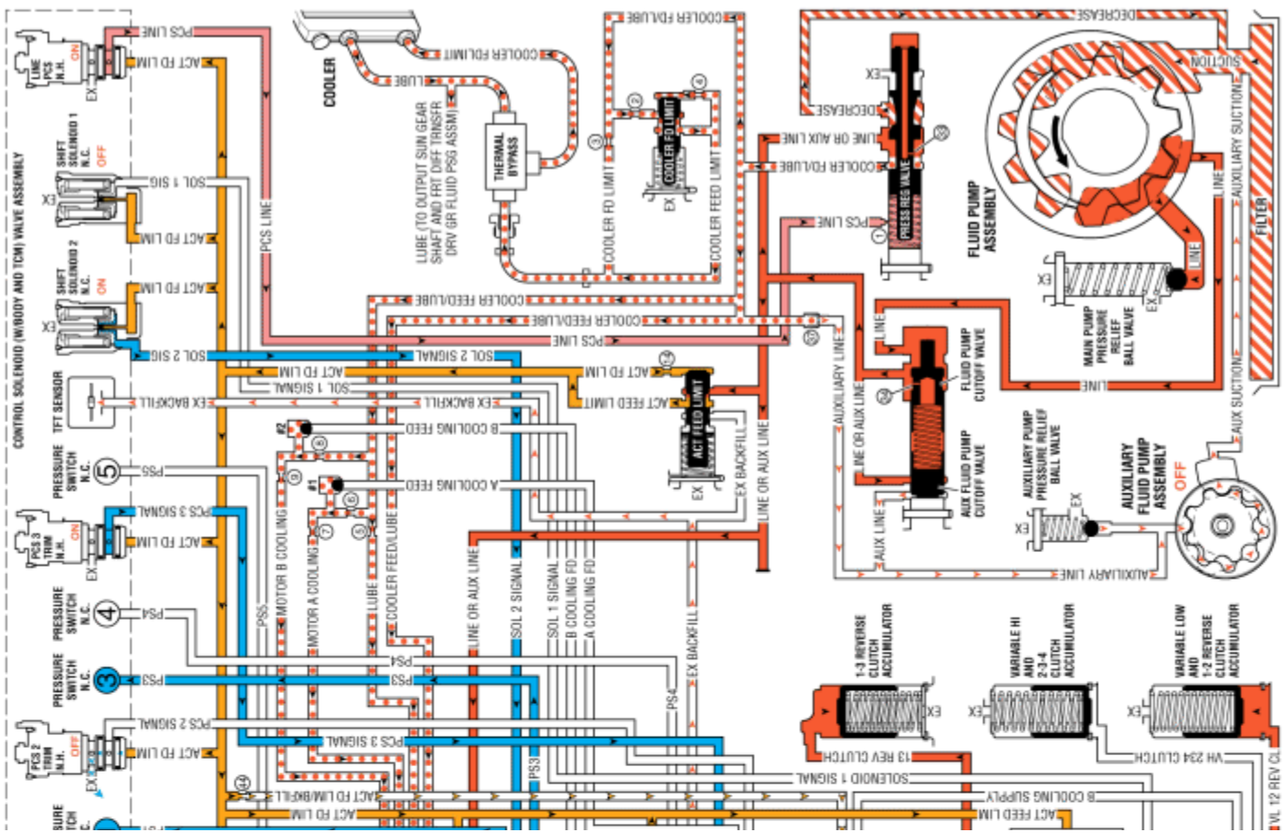

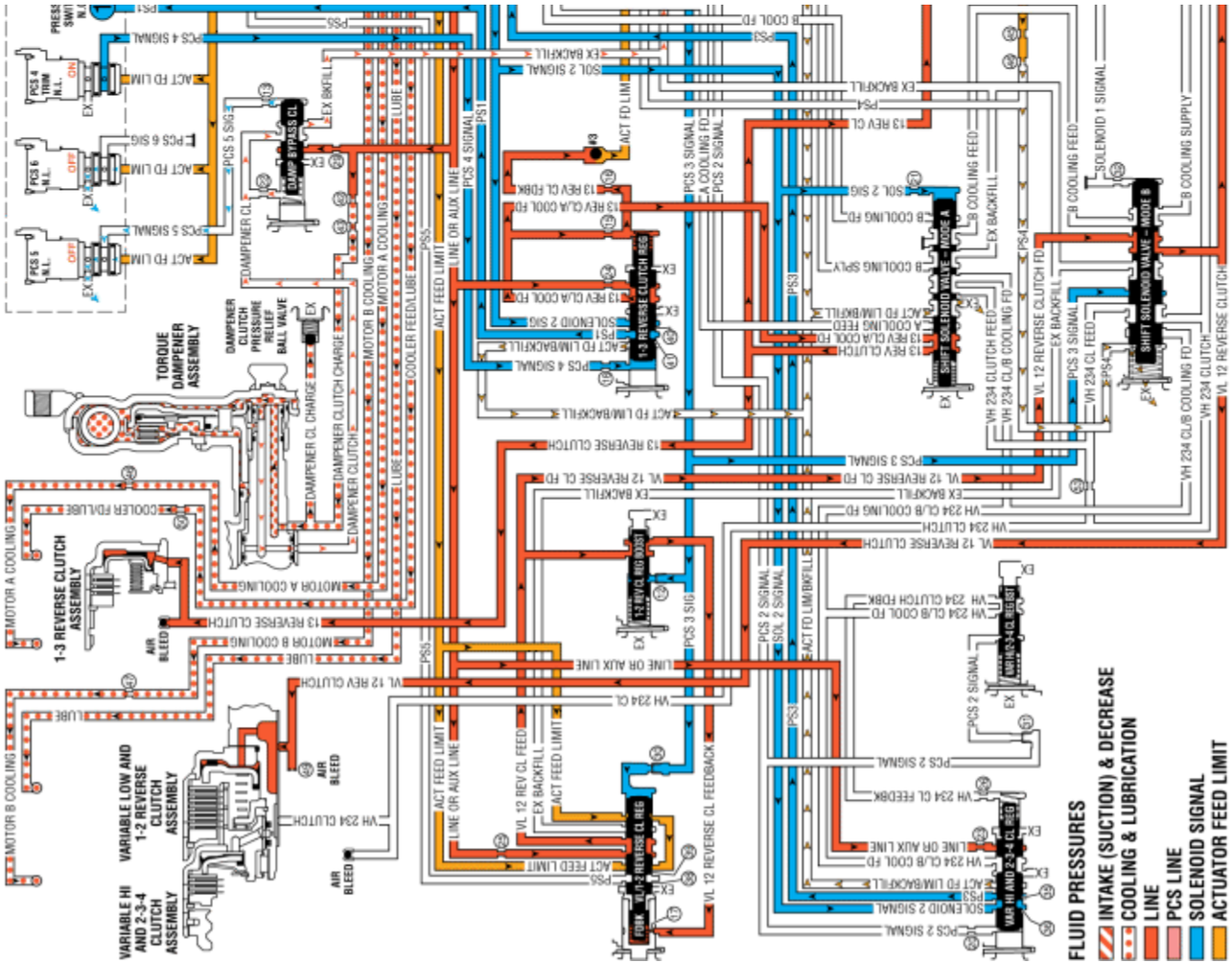

© Copyright Chevrolet. All rights reserved

Drive Output Split Engine Off

When the gear selector lever is moved to the Drive (D) position from the Neutral (N) position, and the internal combustion engine (ICE) is OFF, the following changes occur in the transmission's hydraulic and electrical systems in order to start the vehicle moving from a stopped position.

Variable Hi and 2-3-4 Clutch Applies

Pressure Control (PC) Solenoid 2

The PC solenoid 2 is energised (ON) allowing actuator feed limit fluid to enter the PCS 2 signal circuit. PCS 2 signal fluid is then routed through orifice #20 to the variable hi and 2-3-4 clutch regulator valve.

Shift Solenoid 1

The shift solenoid 1 is energised (ON) allowing actuator feed limit fluid to enter the solenoid 1 signal fluid circuit. Solenoid 1 signal fluid is then routed through orifice #32 to the shift solenoid valve - mode B.

Variable Hi and 2-3-4 Clutch Regulator Valve

PCS 2 signal fluid, at the variable hi and 2-3-4 clutch regulator valve, opposes variable hi and 2-3-4 clutch regulator valve spring force and VH 234 clutch feedback fluid pressure to regulate line or auxiliary line pressure into the VH 234 clutch/B cooling feed circuit.

Variable Hi and 2-3-4 Clutch Boost Valve

PCS 2 signal fluid pressure acts on a differential area of the variable hi and 2-3-4 clutch boost valve, moving the valve against variable hi and 2-3-4 clutch boost valve spring force to regulate VH 234 clutch/B cooling feed fluid into the VH 234 clutch feedback circuit. As PCS 2 signal fluid pressure is increased to a given value, the variable hi and 2-3-4 clutch boost valve opens the VH 234 clutch feedback circuit to exhaust. This results in the variable hi and 2-3-4 clutch regulator valve moving to the full feed position, sending full VH 234 clutch feed pressure (full line pressure) to the variable hi and 2-3-4 clutch.

Shift Solenoid Valve - Mode A

VH 234 clutch/B cooling feed fluid passes through the shift solenoid valve - mode A into the VH 234 clutch feed fluid circuit and is routed to the shift solenoid valve - mode B.

Shift Solenoid Valve - Mode B

VH 234 clutch feed fluid passes through the shift solenoid valve - mode B into the VH 234 clutch circuit and is routed to the variable hi and 2-3-4 clutch assembly.

Variable Hi and 2-3-4 Clutch Assembly

VH 234 clutch fluid is directed to the variable hi and 2-3-4 clutch piston to apply the variable hi and 2-3-4 clutch plates and achieve Reverse - Output Split.

Variable Low and 1-2 Reverse Clutch Releases

Pressure Control (PC) Solenoid 3

The PC solenoid 3 is de-energised (OFF) allowing PCS 3 signal fluid to exhaust from the variable low and 1-2 reverse clutch regulator valve; the variable low and 1-2 reverse clutch boost valve; and the shift solenoid valve -mode B.

Variable Low and 1-2 Reverse Clutch Assembly

VL 12 reverse clutch fluid exhausts from the variable low and 1-2 reverse clutch to the shift solenoid valve - mode B allowing the variable low and 1-2 reverse clutch to release.

Shift Solenoid Valve - Mode B

VL 12 reverse clutch fluid passes through the shift solenoid valve - mode B and into the exhaust backfill fluid circuit.

Variable Low and 1-2 Reverse Clutch Boost Valve

Variable low and 1-2 reverse clutch boost valve spring force moves the variable low and 1-2 reverse clutch boost valve to the released position, allowing VL 12 reverse clutch feedback fluid pressure to exhaust into the VL 12 reverse clutch feed circuit.

Variable Low and 1-2 Reverse Clutch Regulator Valve

Variable low and 1-2 reverse clutch regulator valve spring force moves the variable low and 1-2 reverse clutch regulator valve to the released position, allowing VL 12 reverse clutch feed fluid pressure to exhaust through the valve into the exhaust backfill circuit.

Transmission Fluid Temperature (TFT) Sensor

VL 12 reverse clutch fluid pressure in the exhaust backfill circuit exhausts at the TFT sensor.

Shift Accumulation

Variable Hi and 2-3-4 Clutch Accumulator

VH 234 clutch fluid is also sent to the variable hi and 2-3-4 clutch accumulator assembly. VH 234 clutch fluid moves the variable hi and 2-3-4 clutch accumulator piston against accumulator spring force to cushion the application of the variable hi and 2-3-4 clutch assembly.

Variable Low and 1-2 Reverse Clutch Accumulator

VL 12 reverse clutch fluid also exhausts from the variable low and 1-2 reverse clutch accumulator assembly. Accumulator spring force moves the variable low and 1-2 reverse clutch accumulator piston to the released position.

[Drive Output Split Engine Off]

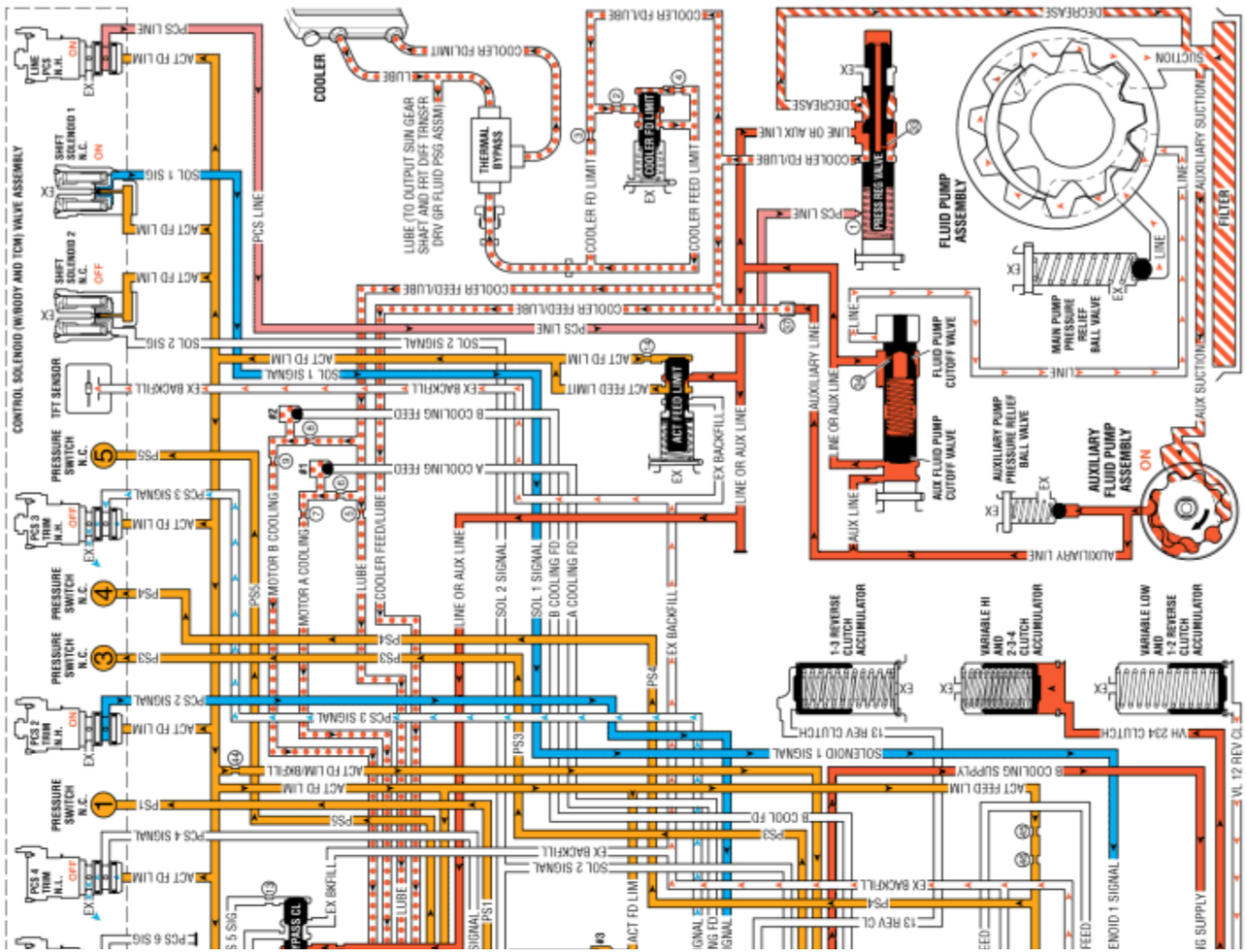

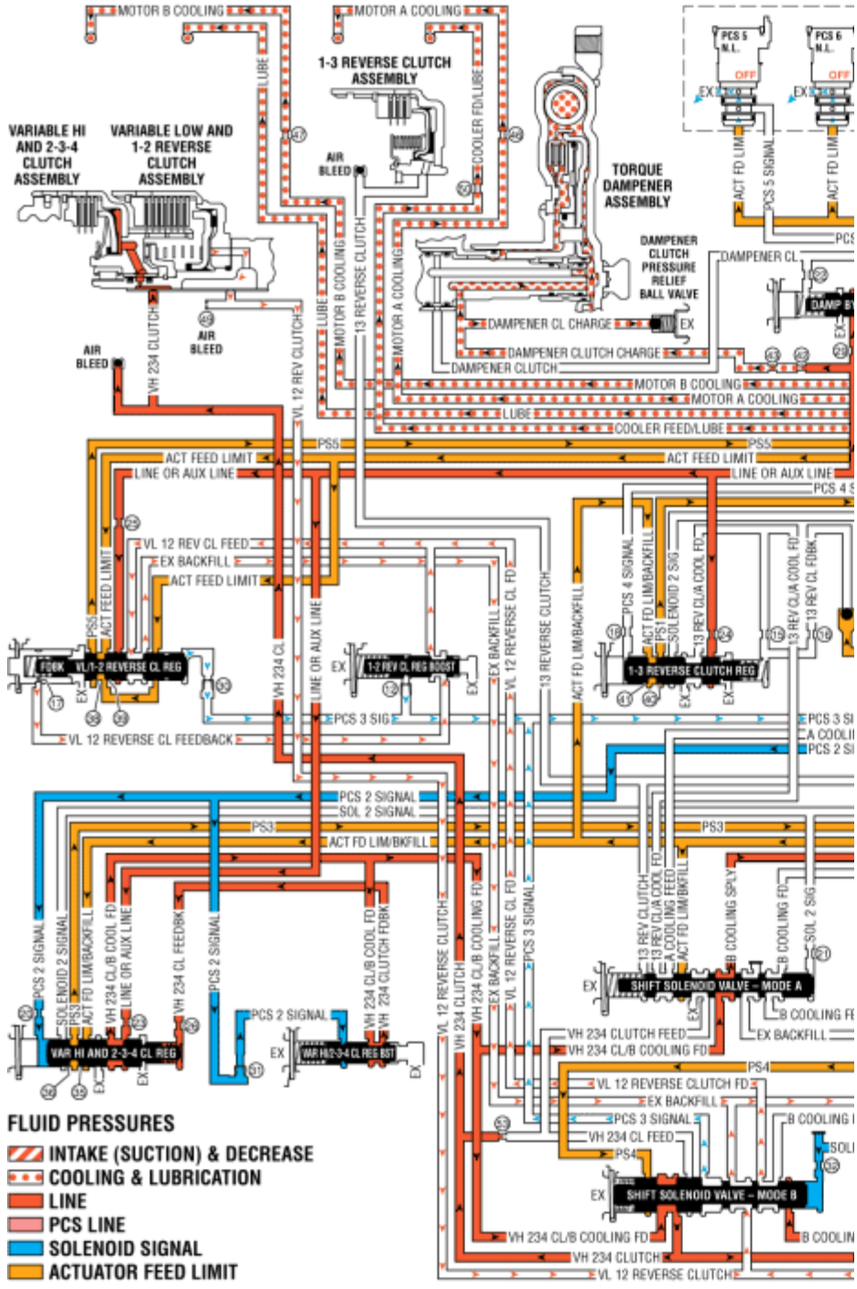

© Copyright Chevrolet. All rights reserved

Drive Output Split Engine On

When the gear selector lever is moved to the Drive (D) position from the Neutral (N) position, and the HPCM determines that operating conditions are appropriate, the internal combustion engine (ICE) is started, the auxiliary fluid pump is turned OFF, and the main fluid pump provides hydraulic fluid pressure (refer to Engine Start). After Engine Start, the following changes would occur to the transmission's hydraulic and electrical systems in order to start the vehicle moving from a stopped position.

1-3 Reverse Clutch Remains Applied

The 1-3 reverse clutch is applied for Engine Start, and remains applied for Reverse - Series Mode (Engine ON).

Pressure Control (PC) Solenoid 4

The PC solenoid 4 is energised (ON) allowing actuator feed limit fluid to enter the PCS 4 signal circuit. PCS 4 signal fluid is then routed through orifice #18 to the 1-3 reverse clutch regulator valve.

Shift Solenoid 2

The shift solenoid 2 is energised (ON) allowing actuator feed limit fluid to enter the solenoid 2 signal fluid circuit. Solenoid 2 signal fluid is routed through orifice #21 to the shift solenoid valve - mode A. Solenoid 2 signal fluid is also routed to the variable hi and 2-3-4 clutch regulator valve, and to the 1-3 reverse clutch regulator valve.

1-3 Reverse Clutch Regulator Valve

PCS 4 signal fluid, at the 1-3 reverse clutch regulator valve, opposes 1-3 reverse clutch regulator valve spring force and 13 reverse clutch feedback fluid pressure to regulate line or auxiliary line pressure into the 13 reverse clutch/A cooling feed circuit.

#3 Ball Check Valve

13 reverse clutch feedback fluid unseats the #3 ball check valve, allowing excess pressure to pass into the actuator feed limit circuit. This helps to control clutch apply fluid pressure and clutch apply feel.

Shift Solenoid Valve - Mode A

13 reverse clutch/A cooling feed fluid passes through the shift solenoid valve - mode A and enters the 13 reverse clutch circuit.

1-3 Reverse Clutch Assembly

13 reverse clutch fluid passes through the case and the transmission fluid pump cover into the 1-3 reverse clutch housing and moves the 1-3 reverse clutch piston against spring force to apply the 1-3 reverse clutch plates.

#1 Pressure Switch

Solenoid 2 signal fluid passes through the 1-3 reverse clutch regulator valve into the PS1 fluid passage. PS1 fluid opens the normally closed #1 pressure switch, signalling the TCM that the transmission is in Drive - Output Split.

Torque Damper Clutch Releases

Pressure Control (PC) Solenoid 5

The PC solenoid 5 is de-energised (OFF) allowing PCS 5 signal fluid to exhaust from the damper bypass clutch valve.

Torque Damper Clutch Assembly

Damper clutch fluid exhausts from the torque damper clutch assembly to the damper bypass clutch valve allowing the torque damper clutch to release.

Damper Bypass Clutch Valve

Damper bypass clutch valve spring force moves the damper bypass clutch valve to the released position, allowing damper clutch fluid pressure to exhaust through the valve into the exhaust backfill circuit.

Transmission Fluid Temperature (TFT) Sensor

Damper clutch fluid pressure in the exhaust backfill circuit exhausts at the TFT sensor.

Variable Hi and 2-3-4 Clutch Remains Applied

Variable Hi and 2-3-4 Clutch Assembly

With the exception of the switch to line fluid pressure from the main fluid pump assembly, no other changes occur to the variable hi and 2-3-4 clutch fluid circuit and the variable hi and 2-3-4 clutch remains applied.

Shift Accumulation

1-3 Reverse Clutch Accumulator

13 reverse clutch fluid is also sent to the 1-3 reverse clutch accumulator assembly. 13 reverse clutch fluid moves the 1-3 reverse clutch accumulator piston against accumulator spring force to cushion the apply of the 1-3 reverse clutch assembly.

Variable Hi and 2-3-4 Clutch Accumulator

VH 234 clutch fluid is also sent to the variable hi and 2-3-4 clutch accumulator assembly. VH 234 clutch fluid moves the variable hi and 2-3-4 clutch accumulator piston against accumulator spring force to cushion the application of the variable hi and 2-3-4 clutch assembly.

Drive Output Split Engine On

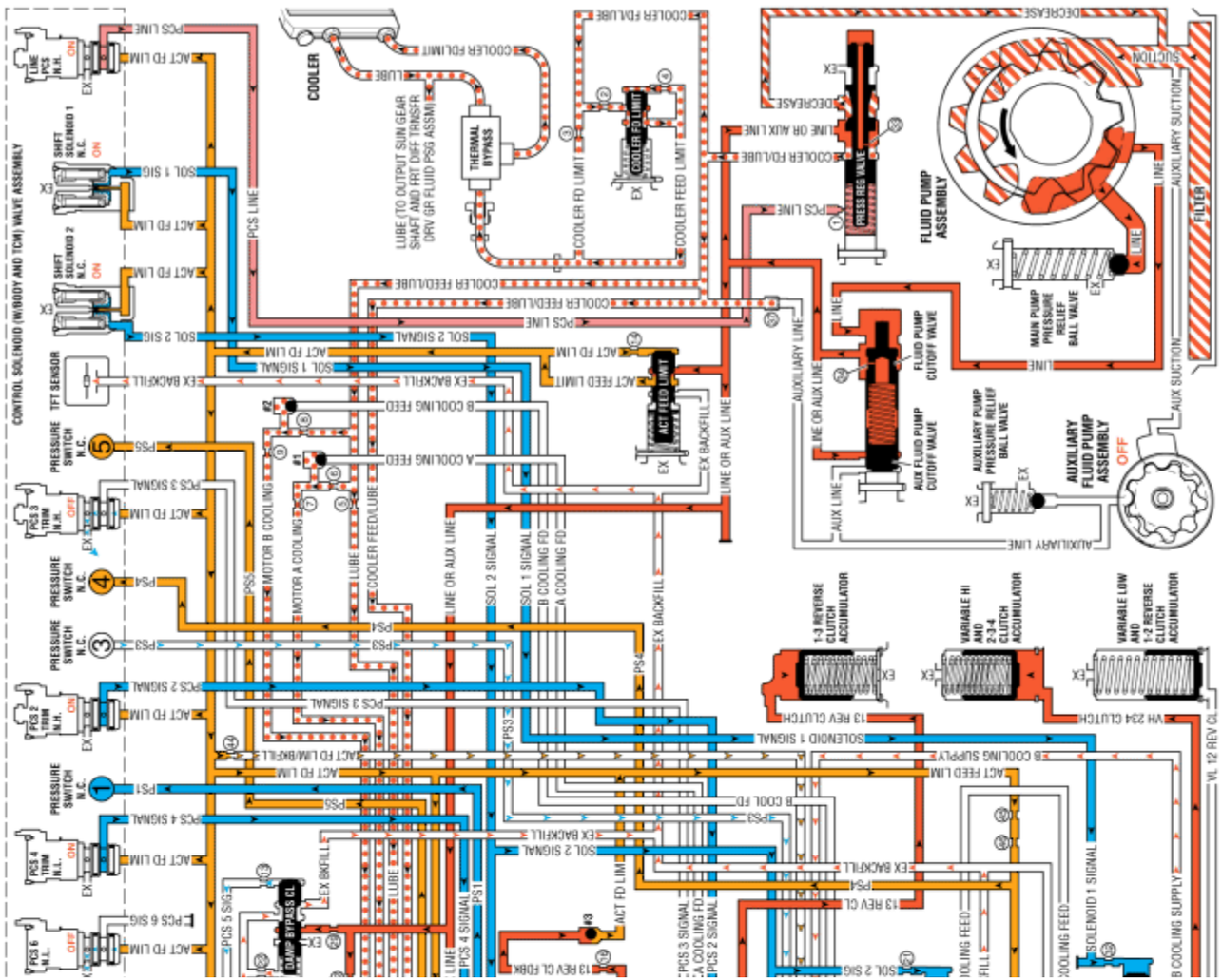

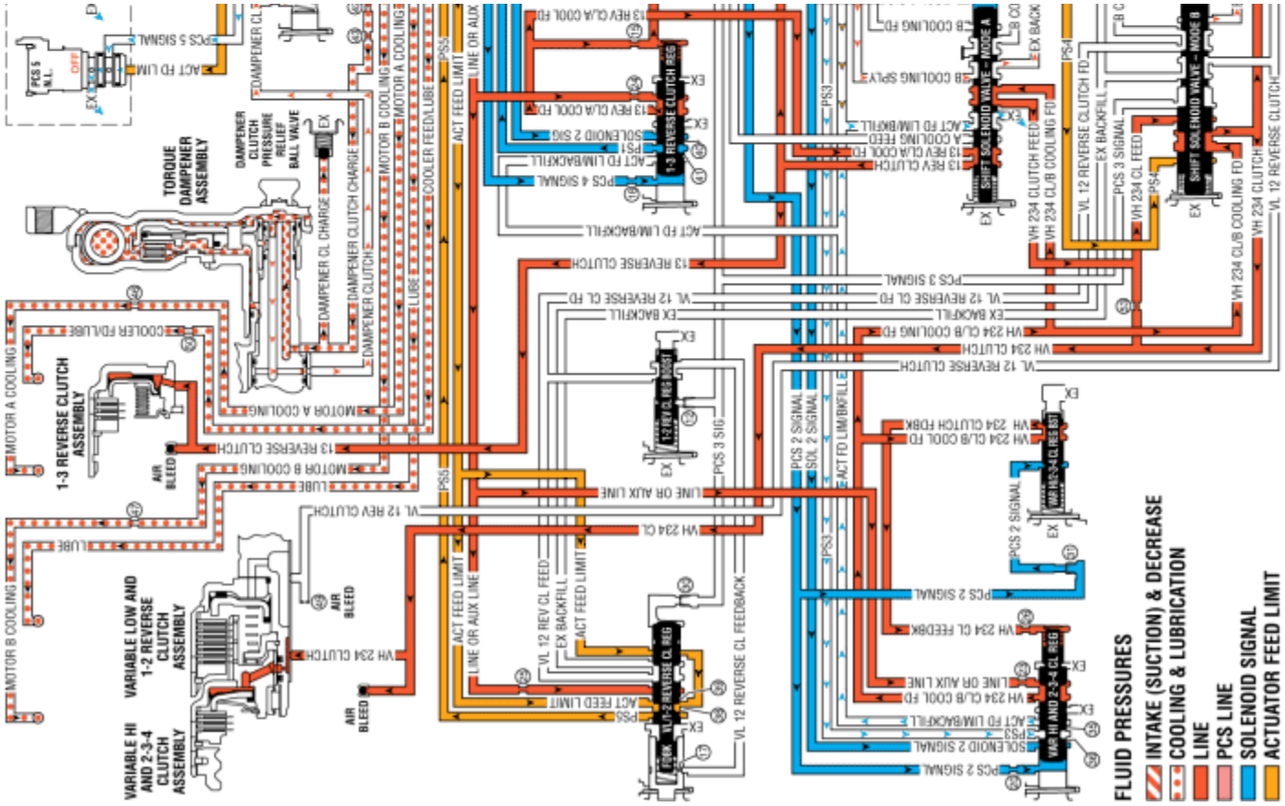

© Copyright Chevrolet. All rights reserved

Power Off Default

If the transmission experiences an electrical component malfunction, all solenoids will default to their normal state. The transmission will operate in Default whenever the gear selector lever is a forward range. The transmission will remain in this default state until the condition is corrected. Reverse (R) range can also still be selected. This default action enables the vehicle to be safely driven to a service centre.

Variable Low and 1-2 Reverse Clutch Applied or Remains Applied

When an electrical malfunction occurs, the PC solenoid 3 defaults to its normally high state (ON). Depending on the operating mode of the transmission at the time of the malfunction, the variable low and 1-2 reverse clutch is either applied or remains applied.

Pressure Control (PC) Solenoid 3

The PC solenoid 3 defaults to its normally high state (ON) allowing actuator feed limit fluid to enter the PCS 3 signal circuit. PCS 3 signal fluid is then routed through orifice #30 to the variable low and 1-2 reverse clutch regulator valve; through orifice #12 to the variable low and 1-2 reverse clutch boost valve; and to the shift solenoid valve -mode B.

Variable Low and 1-2 Reverse Clutch Boost Valve

PCS 3 signal fluid pressure acts on a differential area of the variable low and 1-2 reverse clutch boost valve, moving the valve against variable low and 1-2 reverse clutch boost valve spring force to block VL 12 reverse clutch feed fluid from entering the VL 12 reverse clutch feedback circuit, and opening the VL 12 reverse clutch feedback circuit to exhaust. This results in the variable low and 1-2 reverse clutch regulator valve moving to the full feed position, sending full VL 12 reverse clutch feed pressure (full line pressure) to the variable low and 1-2 reverse clutch.

Variable Low and 1-2 Reverse Clutch Regulator Valve

PCS 3 signal fluid moves the variable low and 1-2 reverse clutch regulator valve, against variable low and 1-2 reverse clutch regulator valve spring force, to the applied position. This allows line or auxiliary line fluid to pass through the valve into the VL 12 reverse clutch feed circuit.

Shift Solenoid Valve - Mode B

VL 12 reverse clutch feed fluid is routed to the shift solenoid valve - mode B, where it passes through the valve into the VL 12 reverse clutch circuit.

Variable Low and 1-2 Reverse Clutch Assembly

VL 12 reverse clutch fluid pressure enters the case assembly behind the variable low and 1-2 reverse clutch piston and moves the piston against spring force to apply the variable low and 1-2 reverse clutch plates.

1-3 Reverse Clutch Releases

The normally low pressure control solenoid 4 and the normally closed shift solenoid 2 default to their normal states (OFF), and the 1-3 reverse clutch is released if it was applied at the time of the malfunction.

Pressure Control (PC) Solenoid 4

The PC solenoid 4 is commanded OFF, allowing PCS 4 signal fluid to exhaust from the 1-3 reverse clutch regulator valve.

Shift Solenoid 2

The shift solenoid 2 is commanded OFF, allowing solenoid 2 signal fluid to exhaust. When solenoid 2 signal fluid exhausts, the shift solenoid valve - mode A moves to the released position.

1-3 Reverse Clutch Assembly

13 reverse clutch fluid pressure is exhausted from the 1-3 reverse clutch housing assembly, allowing 1-3 reverse clutch spring force to move the 1-3 reverse clutch piston and release the 1-3 reverse clutch plates.

Shift Solenoid Valve - Mode A

13 reverse clutch fluid pressure exhausts at the shift solenoid valve - mode A.

#3 Ball Check Valve

13 reverse clutch feedback fluid pressure exhausts into the 13 reverse clutch/A cooling feed circuit, allowing actuator feed limit fluid to seat the ball.

1-3 Reverse Clutch Regulator Valve

1-3 reverse clutch regulator valve spring force moves the 1-3 reverse clutch regulator valve to the released position, allowing 13 reverse clutch/A cooling feed fluid pressure to exhaust.

Variable Hi and 2-3-4 Clutch Releases

The normally closed shift solenoid 1 and shift solenoid 2 default to their normal states (OFF), and the variable hi and 2-3-4 clutch is released if it was applied at the time of the malfunction.

Pressure Control (PC) Solenoid 2

The PC solenoid 2 is commanded OFF, allowing PCS 2 signal fluid to exhaust from the variable hi and 2-3-4 clutch regulator valve and the variable hi and 2-3-4 clutch boost valve.

Variable Hi and 2-3-4 Clutch Assembly

VH 234 clutch fluid pressure is exhausted from the case assembly, allowing variable hi and 2-3-4 clutch spring force to move the variable hi and 2-3-4 clutch piston and release the variable hi and 2-3-4 clutch plates.

Shift Solenoid Valve - Mode B

Exhausting VH 234 clutch fluid pressure passes through the shift solenoid valve - mode B into the VH 234 clutch feed circuit.

Shift Solenoid Valve - Mode A

VH 234 clutch feed fluid pressure exhausts at the shift solenoid valve - mode A.

Variable Hi and 2-3-4 Clutch Regulator Valve

Variable hi and 2-3-4 clutch regulator valve spring force moves the variable hi and 2-3-4 clutch regulator valve to the released position, allowing VH 234 clutch/B cooling feed fluid pressure to exhaust.

Torque Damper Clutch Releases

If the torque damper clutch is applied when an electrical malfunction occurs, the clutch will release when the PC solenoid 5 defaults to its normally low state (OFF).

Pressure Control (PC) Solenoid 5

The PC solenoid 5 is de-energised (OFF) allowing PCS 5 signal fluid to exhaust from the damper bypass clutch valve.

Torque Damper Clutch Assembly

Damper clutch fluid exhausts from the torque damper clutch assembly to the damper bypass clutch valve allowing the torque damper clutch to release.

Damper Bypass Clutch Valve

Damper bypass clutch valve spring force moves the damper bypass clutch valve to the released position, allowing damper clutch fluid pressure to exhaust through the valve

into the exhaust backfill circuit.

Transmission Fluid Temperature (TFT) Sensor

Damper clutch fluid pressure in the exhaust backfill circuit exhausts at the TFT sensor.

Shift Accumulation

Variable Low and 1-2 Reverse Clutch Accumulator

VL 12 reverse clutch fluid is also sent to the variable low and 1-2 reverse clutch accumulator assembly. VL 12 reverse clutch fluid moves the variable low and 1-2 reverse clutch accumulator piston against accumulator spring force to cushion the apply of the variable low and reverse clutch assembly.

1-3 Reverse Clutch Accumulator

13 reverse clutch fluid also exhausts from the 1-3 reverse clutch accumulator assembly. Accumulator spring force moves the 1-3 reverse clutch accumulator piston to the released position.

Variable Hi and 2-3-4 Clutch Accumulator

VH 234 clutch fluid also exhausts from the variable hi and 2-3-4 clutch accumulator assembly. Accumulator spring force moves the variable hi and 2-3-4 clutch accumulator piston to the released position.

Power Off Default

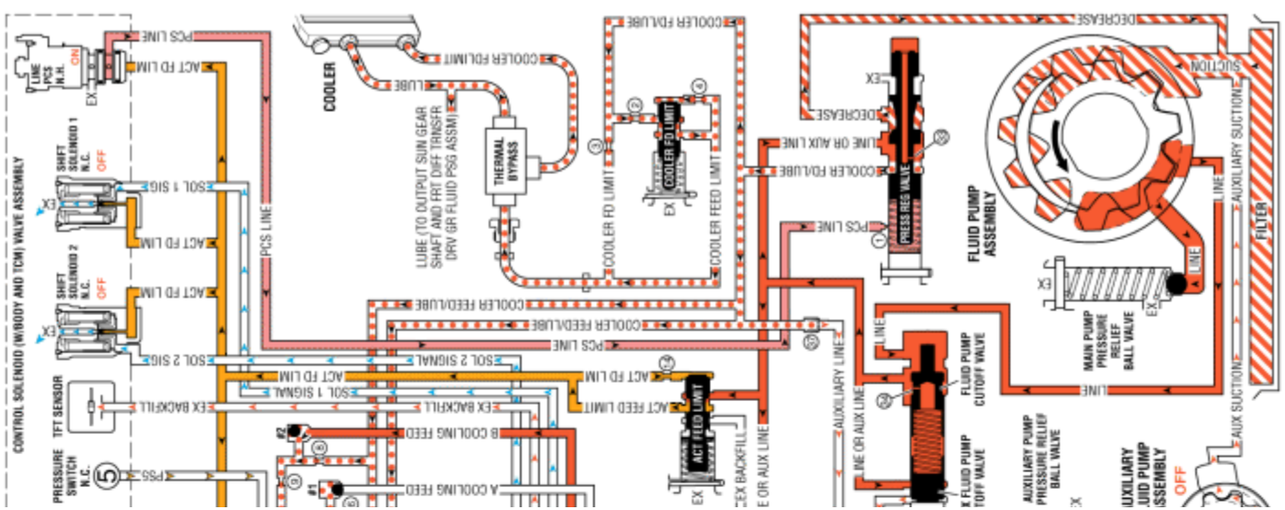

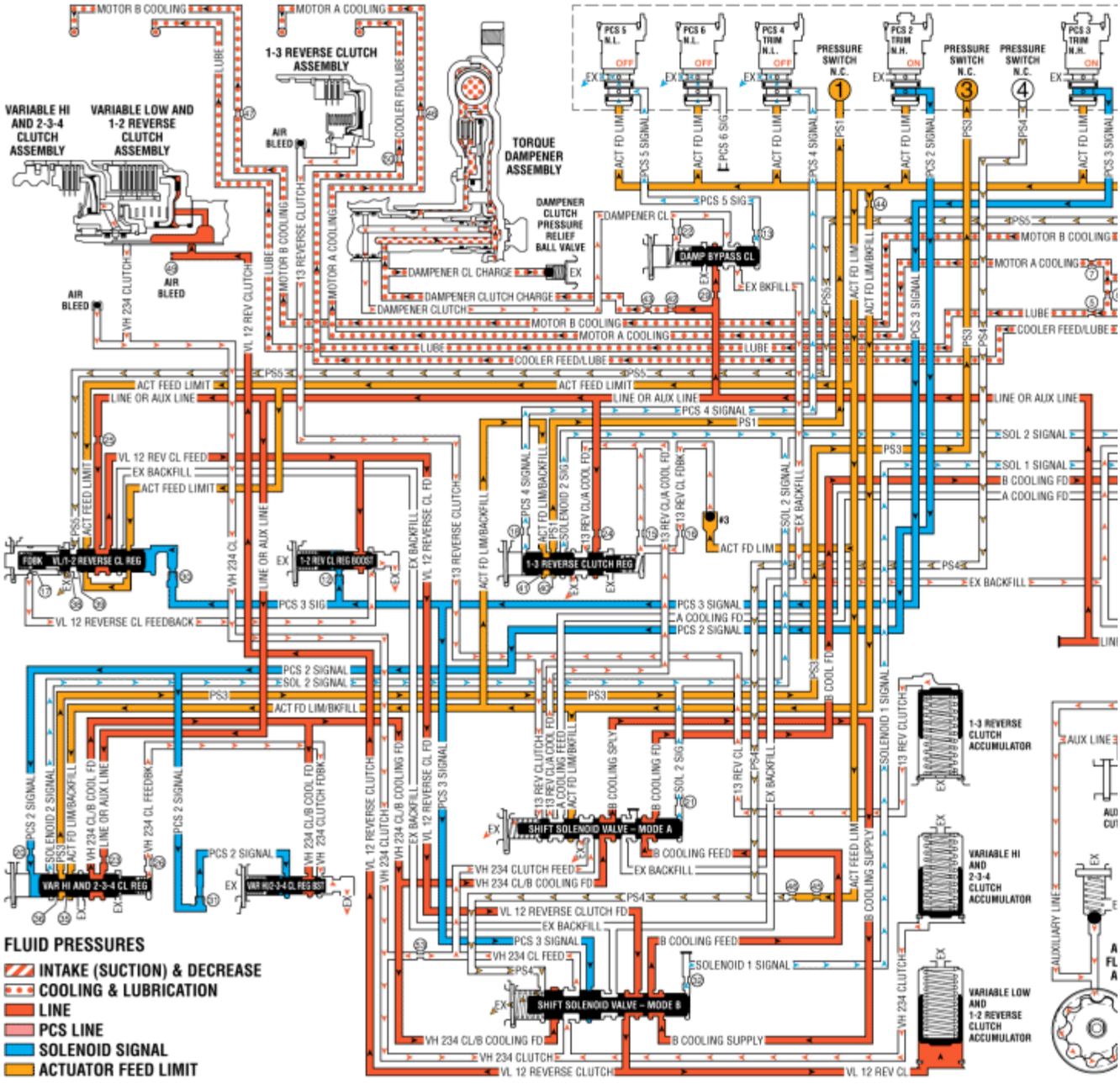
MOTOR B COOLING
MOTOR A COOLING
1-3 REVERSE CLUTCH ASSEMBLY
VARIABLE HI AND 2-3-4 CLUTCH ASSEMBLY
VARIABLE LOW AND 1-2 REVERSE CLUTCH ASSEMBLY
TORQUE DAMPENER ASSEMBLY
DAMPENER CLUTCH PRESSURE RELIEF BALL VALVE
PRESSURE SWITCH N.C.
PRESSURE SWITCH N.C.
PRESSURE SWITCH N.C.
AIR BLEED
LUBE
COOLER FEED/LUBE
DAMPENER CL CHARGE
DAMPENER CLUTCH CHARGE
DAMPENER CLUTCH
DAMPENER CL
DAMP BYPASS CL
EX BKFILL
VH 234 CLUTCH
VL 12 REV CLUTCH
13 REVERSE CLUTCH
ACT FEED LIMIT
LINE OR AUX LINE
VL 12 REV CL FEED
EX BACKFILL
VL/1-2 REVERSE CL REG
1-2 REV CL REG BOOST
1-3 REVERSE CLUTCH REG
PCS 3 SIG
VL 12 REVERSE CL FEEDBACK
PCS 3 SIGNAL
A COOLING FD
PCS 2 SIGNAL
SOL 2 SIGNAL
ACT FD LIM/BKFILL
SOLENOID 2 SIGNAL
VH 234 CL/B COOL FD
VH 234 CLUTCH FDBK
VAR HI AND 2-3-4 CL REG
VAR HI/2-3-4 CL REG BST
VH 234 CL FEEDBK
VH 234 CL/B COOLING FD
VL 12 REVERSE CL FD
13 REV CL/A COOL FD
A COOLING FEED
B COOLING SPLY
B COOLING FEED
SOL 2 SIG
13 REV CL
SHIFT SOLENOID VALVE – MODE A
SHIFT SOLENOID VALVE – MODE B
VH 234 CLUTCH FEED
VL 12 REVERSE CLUTCH FD
VH 234 CL FEED
SOLENOID 1 SIGNAL
B COOLING SUPPLY
VL 12 REVERSE CLUTCH
VL 12 REV CL
1-3 REVERSE CLUTCH ACCUMULATOR
VARIABLE HI AND 2-3-4 CLUTCH ACCUMULATOR
VARIABLE LOW AND 1-2 REVERSE CLUTCH ACCUMULATOR
AUXILIARY LINE
FLUID PRESSURES
INTAKE (SUCTION) & DECREASE
COOLING & LUBRICATION
LINE
PCS LINE
SOLENOID SIGNAL
ACTUATOR FEED LIMIT

© Copyright Chevrolet. All rights reserved

Special Tools

Illustration	Tool Number/Description
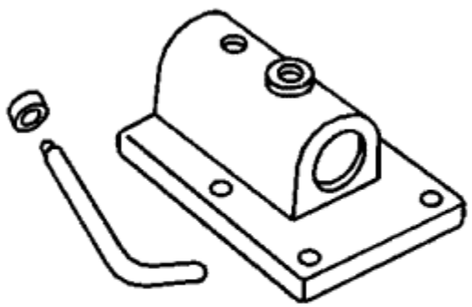	DT 3289-20 J 3289-20 Holding Fixture
	DT 21366 J 21366 Converter Holding Strap

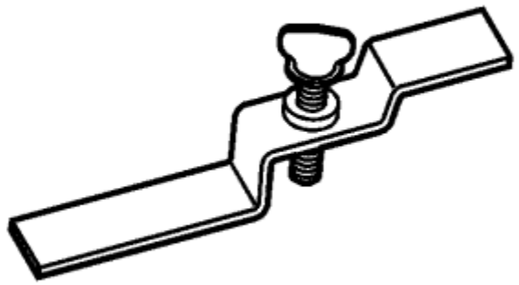	
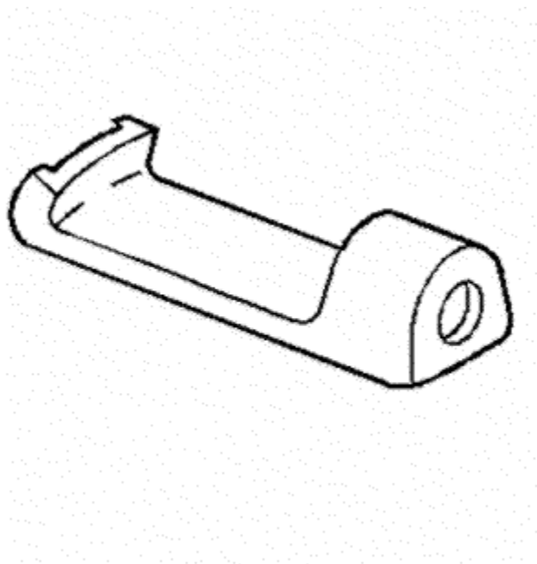	DT 23129 J 23129 KM 586 Universal Seal Remover
	DT 23327 J 23327 Clutch Spring Compressor

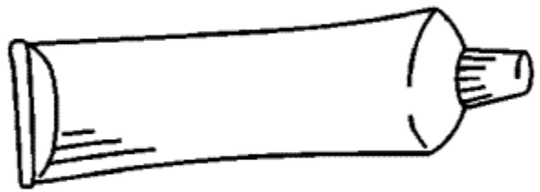	DT 23444-A J 23444-A Extreme Press Lubricant - 1/4 Ounce Tube
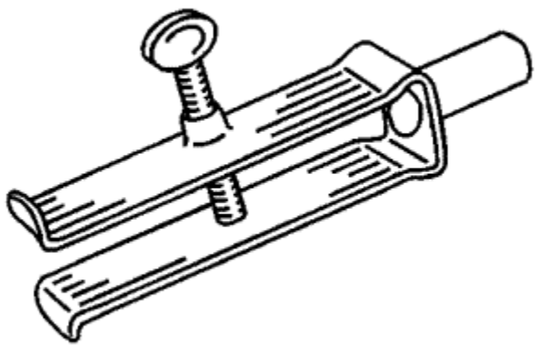	DT 26941 J 26941 KM J 26941 Bushing and Bearing Remover - 3-4 in

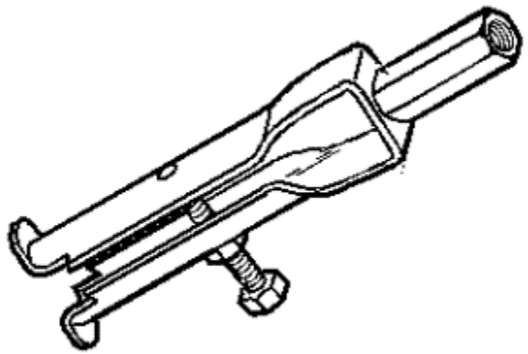	DT 29369-2 J 29369-2 Bushing and Bearing Remover - 2-3 in
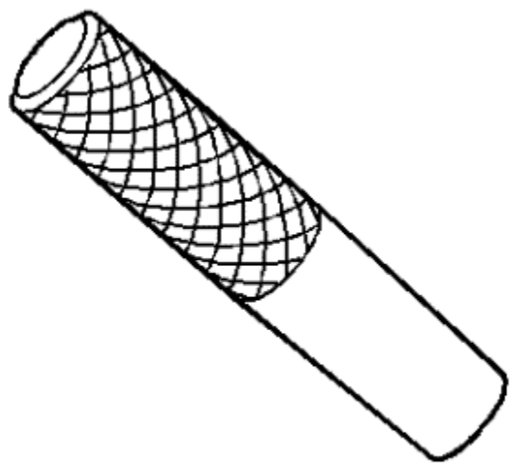	DT 38868 J 38868 Output Shaft Remover and Installer

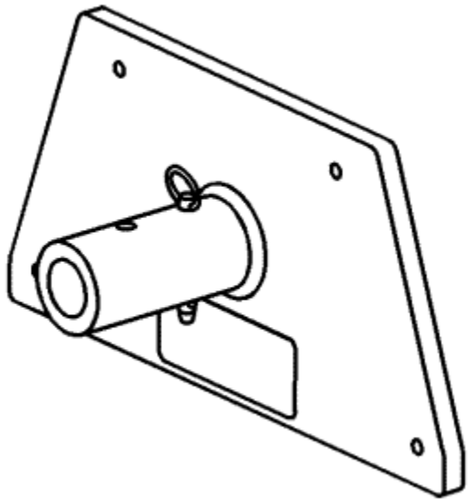	DT 39890 J 39890 Holding Fixture Adaptor
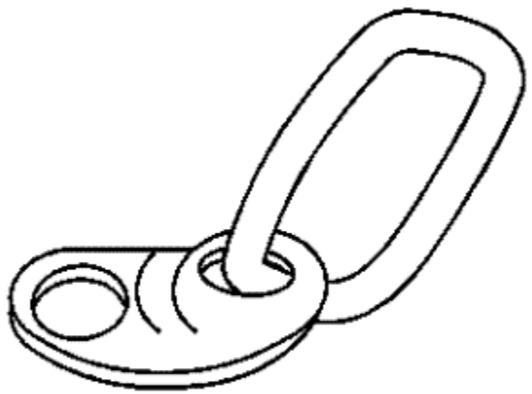	DT 42451-1 J 42451-1 Engine Support Adaptor
	DT 45094

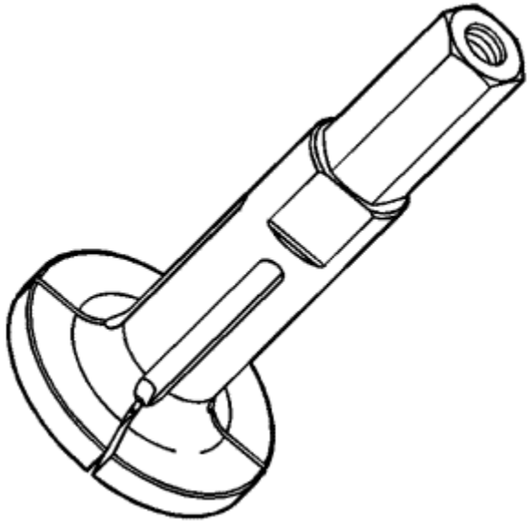	J 45094 Bearing Cup Remover
	DT 45096 J 45096 Transmission Oil Cooler System Flush and Flow Test Tool
	DT 45096-50 J 45096-50

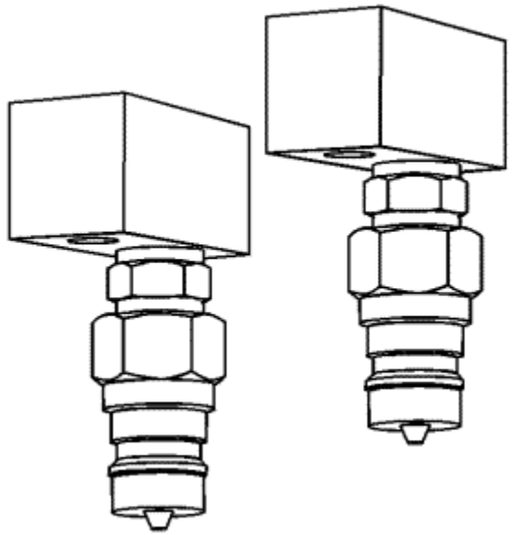	Transmission Cooler Flush Adaptor
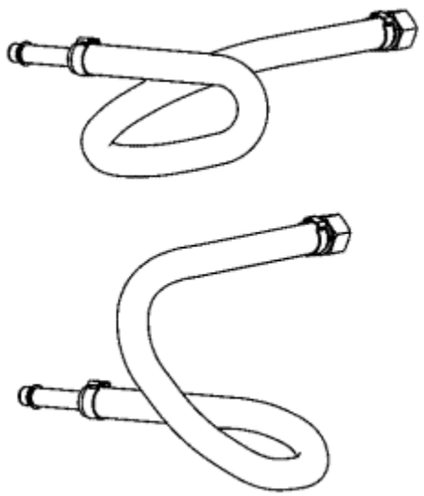	DT 45096-55 Transmission Cooler Flush Adaptor
	DT 45124

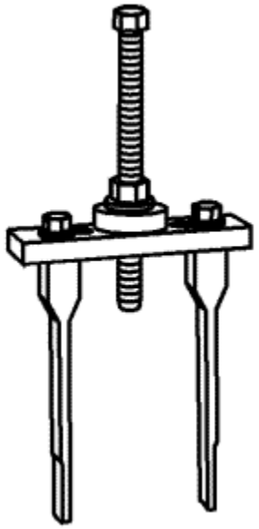	J 45124 Removal Bridge
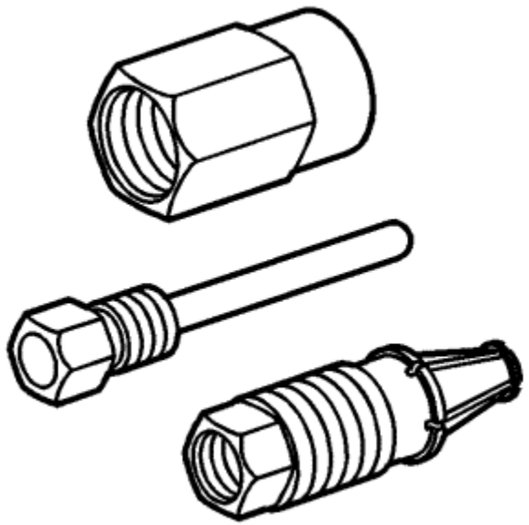	DT 45201 J 45201 Cooler Line Seal Remover
	DT 46625

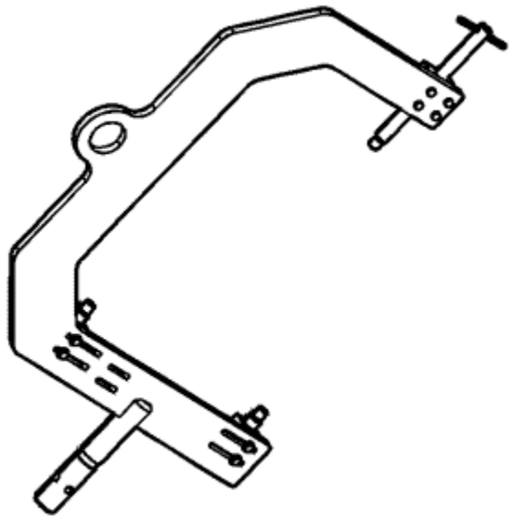	J 46625 Transmission Holding Fixture
	DT 46630 J 46630 Lubricant Dam Installer
	DT 47693-2

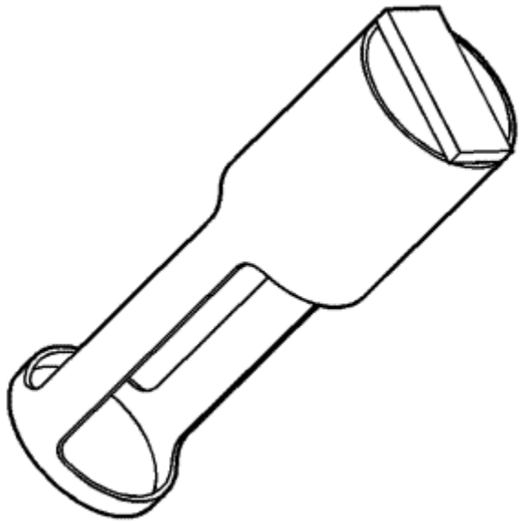	Compressor
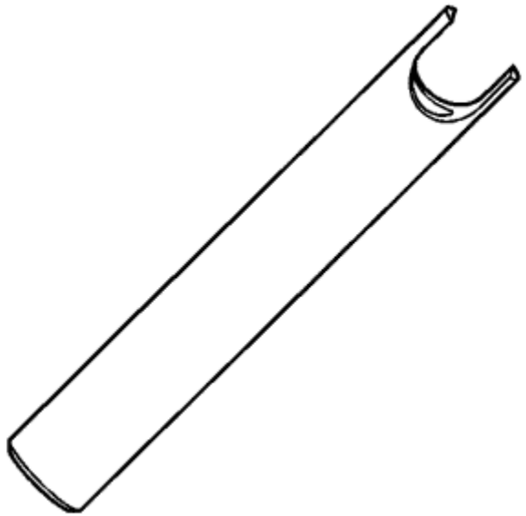	DT 47793 Differential Rotating Tool
	DT 47800

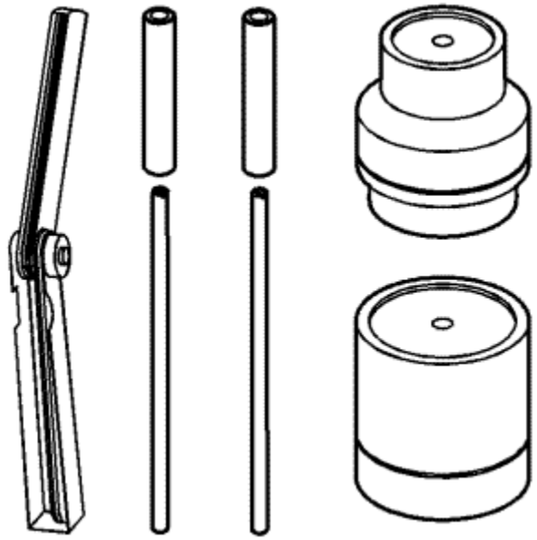	Thrust Washer Selection Gauge Kit
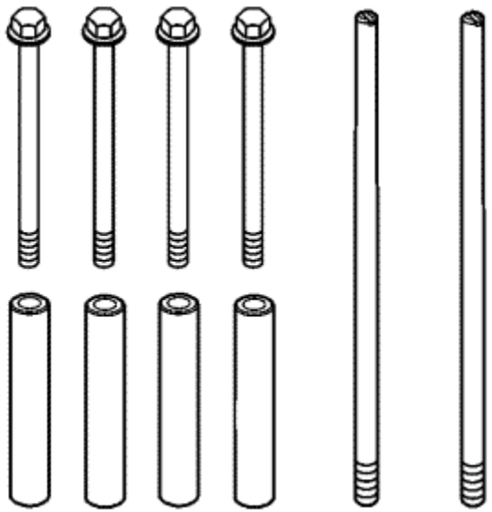	DT 47800-10 Thrust Washer Selection Bolts, Spacer and Shims
	DT 47825

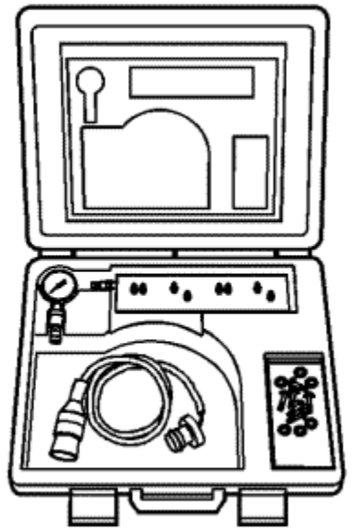	Control Solenoid Test Plate
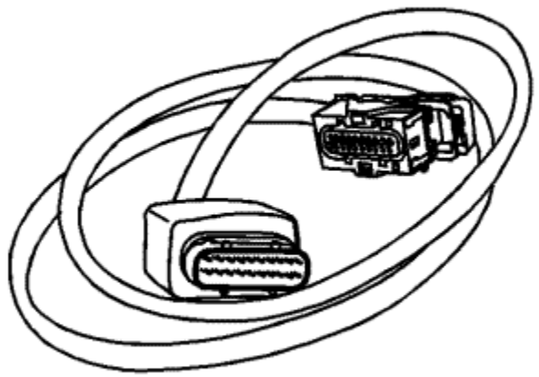	DT 47825-20 Adaptor Harness
	DT 47927-2

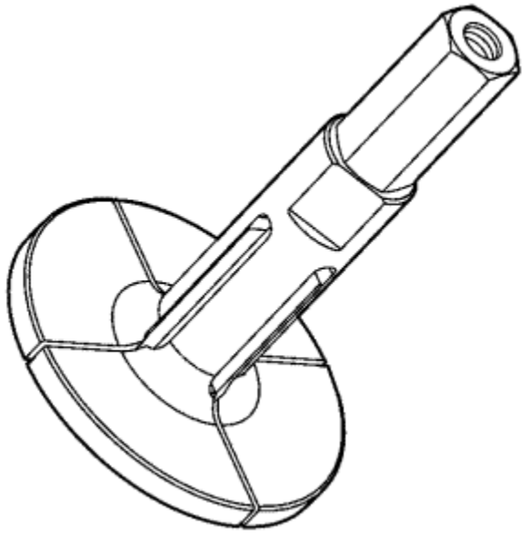	Bearing Cup Remover
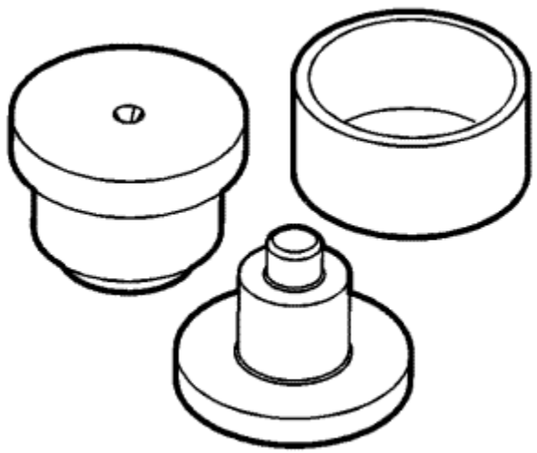	DT 47928 Bearing Installer
	DT 48055

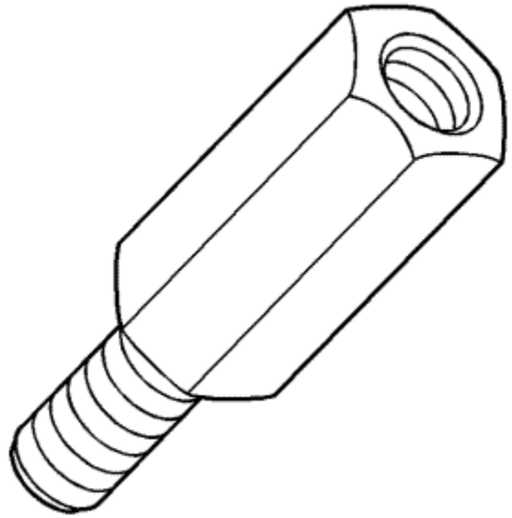	Lubricant Dam Remover
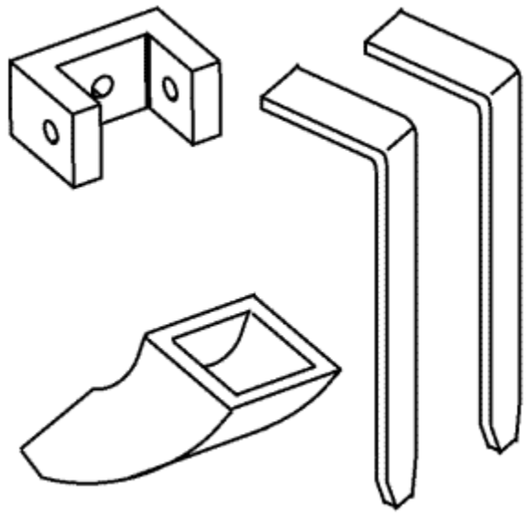	DT 49098 Input and Output Clutch Pack Retaining Ring Remover
	DT 49101

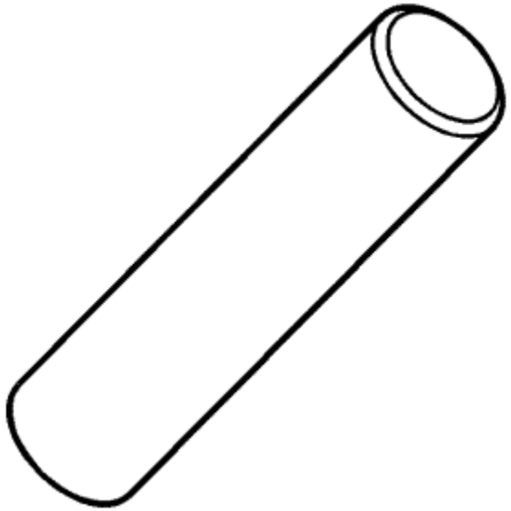	Seal Installer
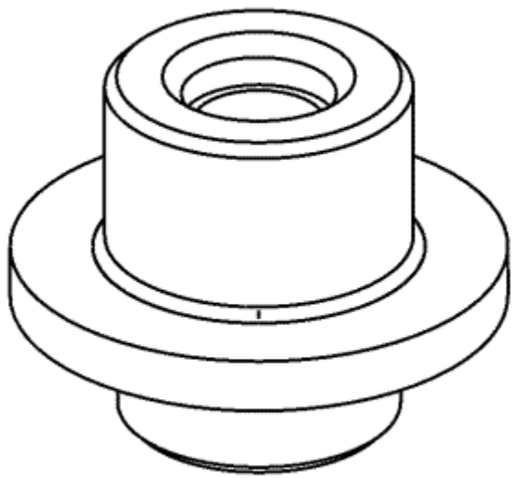	DT 49229 Transfer Shaft Bearing Installer
	DT 49230-1

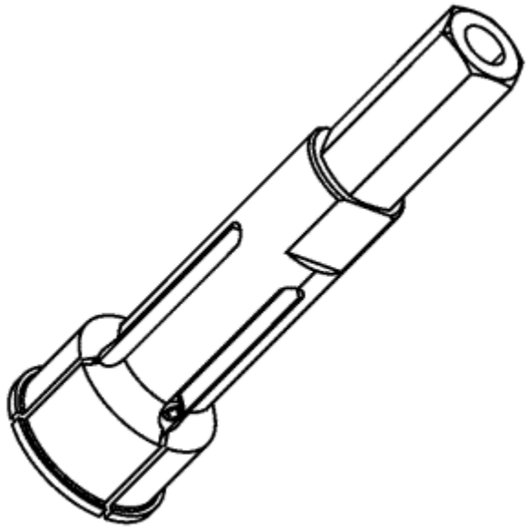	Bearing Remover
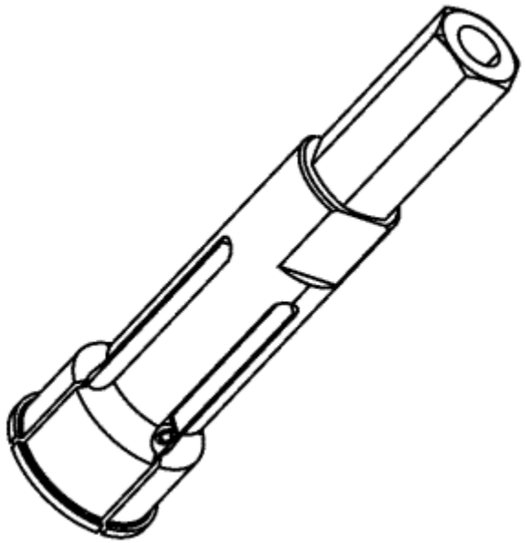	DT 49230-2 Bearing Remover
	DT 49261

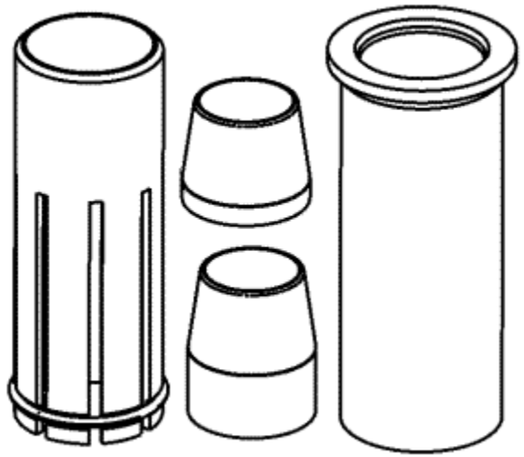	Input Shaft Seal Installer
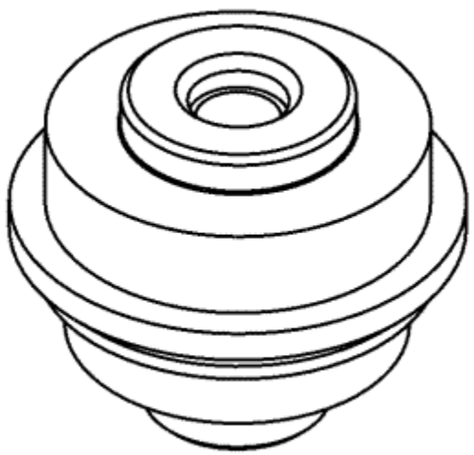	DT 49263 Bearing Cup Installer
	DT 49264

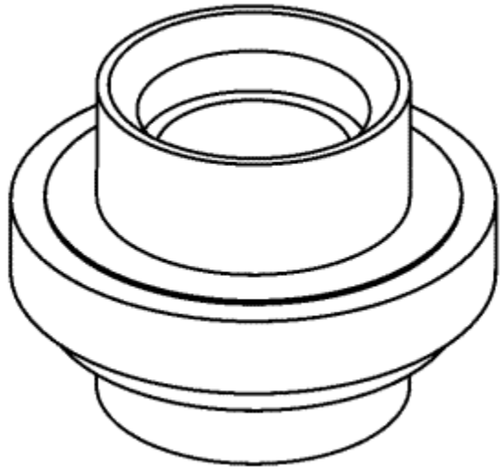	Bearing Cup Installer with Press
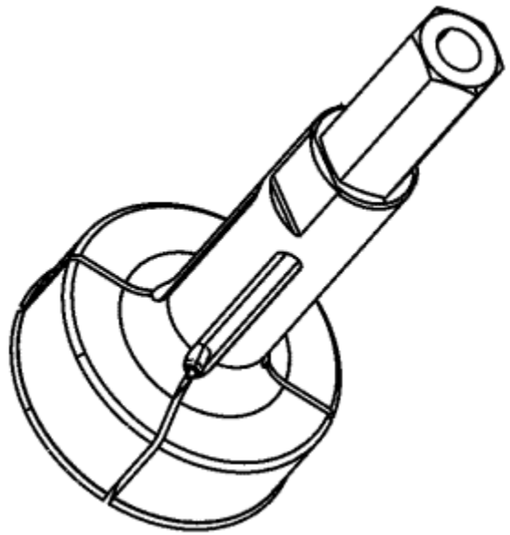	DT 49266 Bearing Cup Remover
	DT 49468

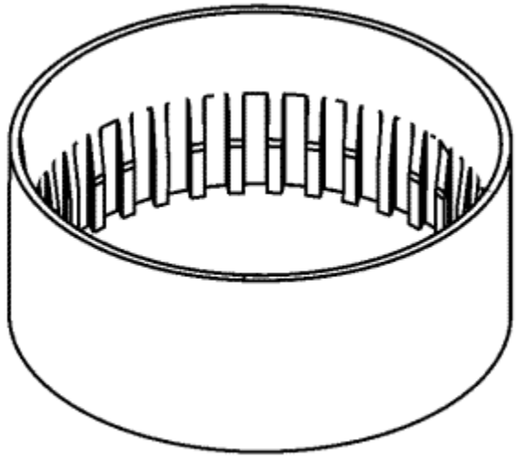	Retaining Ring Installer
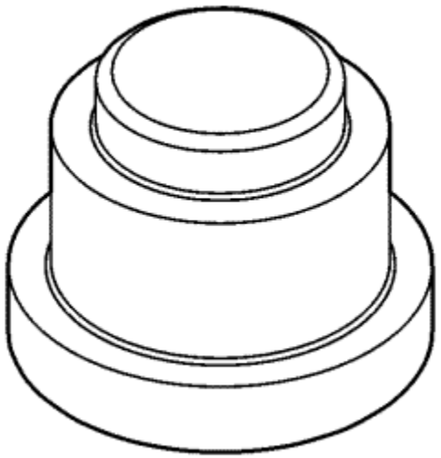	DT 49830 Differential Bearing Installer/Pilot
	DT 50301

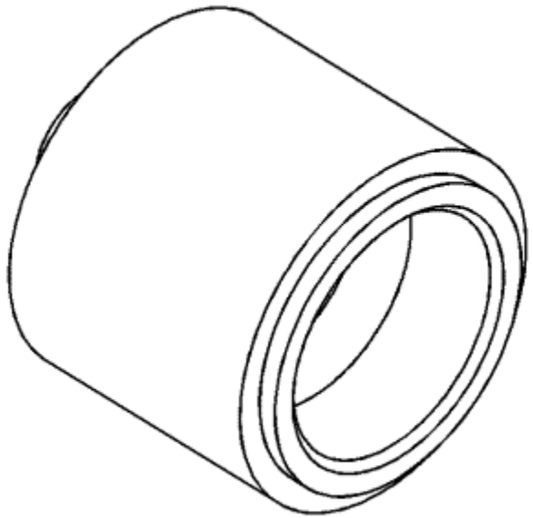	Seal and Bearing Installer
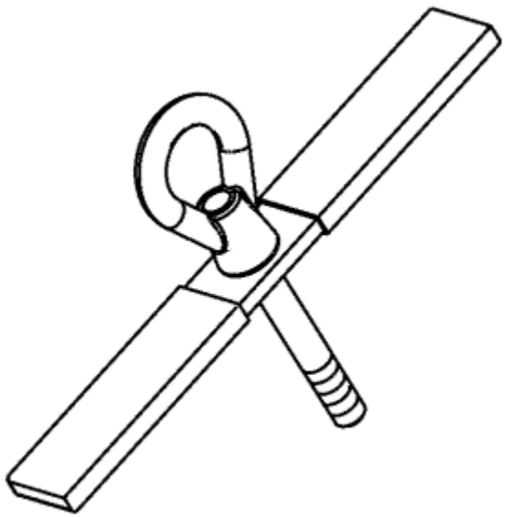	DT 50302 Rotor and Stator Lifter Assembly

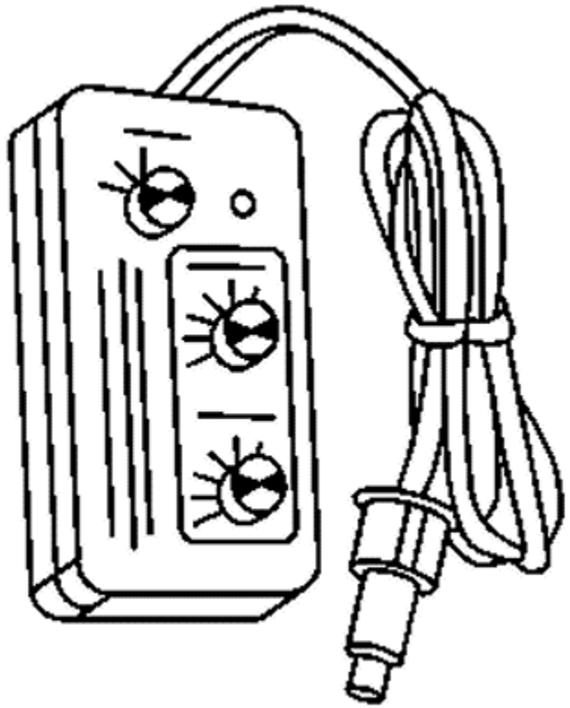	EL 38522-A J 38522 Variable Signal Generator
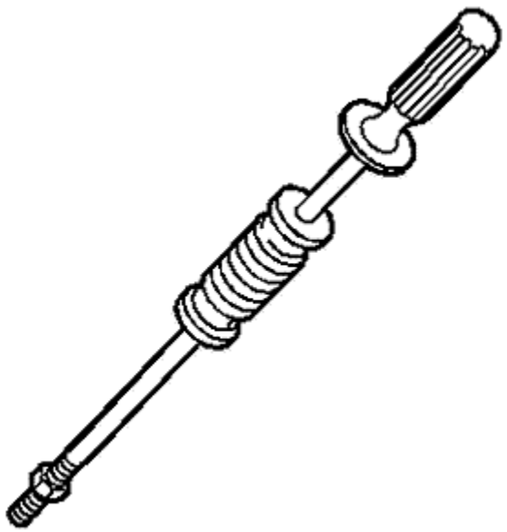	GE 6125-1B J 6125-1B KM J 7004 Slide Hammer with Adaptor

	GE 8092 J 8092 KM J 8092 Driver Handle
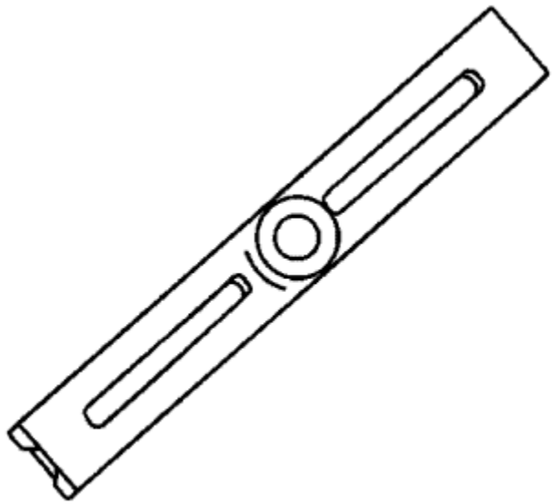	GE 8433-1 J 8433-1 Puller Bar

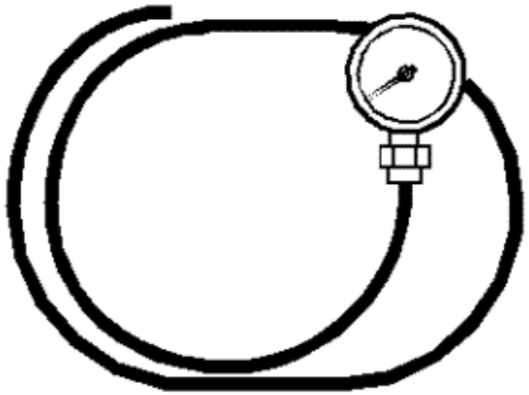	GE 21867-A J 21867-A Pressure Gauge
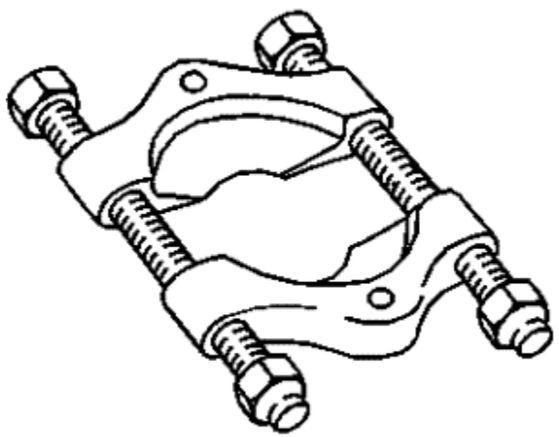	GE 22912-B J 22912-B Rear Pinion and Axle Bearing Remover

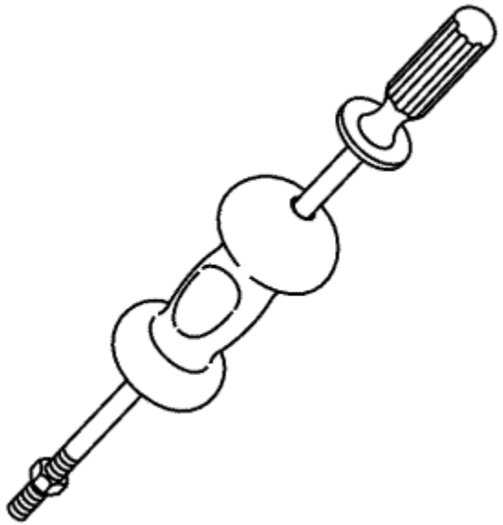	GE 23907-1 J 23907-1 Slide Hammer and Shaft
	GE 24731-206 J 24731-206 Tempil Stick

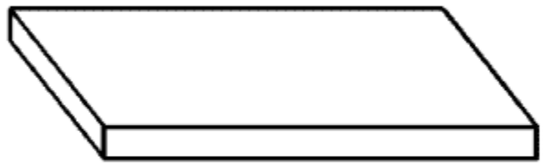	GE 34673 J 34673 Flat Gauge Bar
	GE 41623-B J 41623-B Cooler Quick Connect Tool

© Copyright Chevrolet. All rights reserved

Shift Lock Control Schematics

Shift Lock

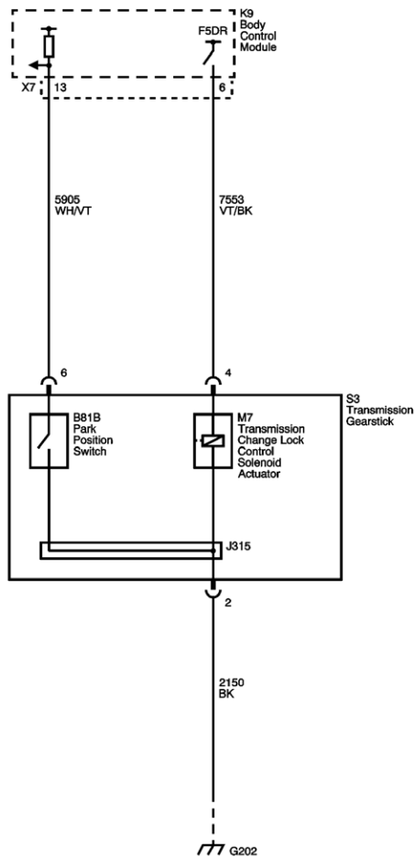

Master Electrical Component List

Automatic Transmission Shift Lock Control Description and Operation

F4DR, F5DR, F6DR, F7DR, F8DR, F9DR, F10DR, F11DR and F12DR Fuses

202

© Copyright Chevrolet. All rights reserved

DTC B270A

Diagnostic Instructions

- Perform the Diagnostic System Check - Vehicle prior to using this diagnostic procedure.
- Review Strategy Based Diagnosis for an overview of the diagnostic approach.
- Diagnostic Procedure Instructions provides an overview of each diagnostic category.

DTC Descriptors

DTC B270A 01: Park Lock Solenoid Control Circuit Short to Voltage

DTC B270A 02: Park Lock Solenoid Control Circuit Short to Ground

DTC B270A 04: Park Lock Solenoid Control Circuit Open

Diagnostic Fault Information

Circuit	Short to Ground	Open/High Resistance	Short to Voltage	Signal Performance
Control	B270A 02, 1	B270A 04, 1	B270A 01, 2	-
Ground	--	B270A 04, 1	--	--

1. Transmission shift control lever will not move from PARK with the brake pedal applied.
2. Transmission shift control lever will move from PARK without the brake pedal applied.

Circuit/System Description

The body control module controls the transmission shift lock control solenoid actuator by providing a battery positive voltage to the solenoid when the brake pedal is applied. The BCM monitors the voltage and current flow of the control circuit.

Conditions for Running the DTC

- The ignition switch is in the ON position.
- The brake pedal is applied.
- The transmission is in the PARK position.
- The DTC runs continuously once the above conditions are met.

Conditions for Setting the DTC

B270A 01

The body control module detects a short to voltage in the transmission shift lock control solenoid actuator control circuit for 1 second.

B270A 02

The body control module detects a short to ground in the transmission shift lock control solenoid actuator control circuit for 1 second.

B270A 04

The body control module detects an open circuit in the transmission shift lock control solenoid actuator control circuit for 1 second.

Action Taken When the DTC Sets

The body control module will not attempt to enable the voltage supply circuit of the automatic transmission park lock control solenoid until the next power switch cycle.

Conditions for Clearing the DTC

- A current DTC B270A will clear when the malfunction is no longer present and the power switch is cycled.
- A history DTC will clear after 100 ignition cycles with no current DTC active during the 100 power switch cycles.

Reference Information

Schematic Reference

Shift Lock Control Schematics

Connector End View Reference

Component Connector End Views

Description and Operation

Automatic Transmission Shift Lock Control Description and Operation

Electrical Information Reference

- Circuit Testing
- Connector Repairs
- Testing for Intermittent Conditions and Poor Connections
- Wiring Repairs

Scan Tool Reference

Control Module References for scan tool information

Circuit/System Verification

1. Vehicle in Service Mode.
2. Verify the scan tool Brake Transmission Shift Interlock Solenoid Actuator Command parameter changes from Inactive to Active when the brake pedal is applied.
   If the Brake Transmission Shift Interlock Solenoid Actuator Command does not change
   Refer to Stop Lamps Malfunction
   If the Brake Transmission Shift Interlock Solenoid Actuator Command changes
3. Verify the S3 transmission shift lever moves out of the PARK position when the brake pedal is applied.
   If the S3 transmission shift lever does not move out of the PARK position
   Refer to Circuit/System Testing.
   If the S3 transmission shift lever does move out of the PARK position
   All OK.

Circuit/System Testing

1. Vehicle OFF and all vehicle systems OFF, disconnect the harness connector at the S3 transmission shift lever. It may take up to 2 minutes for all vehicle systems to power down.
2. Test for less than 10 Ω between the ground circuit terminal 2 and ground.
   If 10 Ω or greater
   2.1. Vehicle OFF.
   2.2. Test for less than 2 Ω in the ground circuit end to end.
   If 2 Ω or greater, repair the open/high resistance in the circuit.
   If less than 2 Ω, repair the open/high resistance in the ground connection.
   If less than 10 Ω

3. Vehicle in Service Mode, connect a test lamp between the control circuit terminal 4 and the ground circuit terminal 2.
4. Verify the test lamp turns ON and OFF when commanding the Brake Transmission Shift Interlock Solenoid Actuator ON and OFF with a scan tool.

If the test lamp is always OFF

4.1. Vehicle OFF, disconnect the harness connector at the K9 body control module.
4.2. Test for infinite resistance between the control circuit and ground.
If less than infinite resistance, repair the short to ground on the circuit.
If infinite resistance
4.3. Test for less than 2 Ω in the control circuit end to end.
If 2 Ω or greater, repair the open/high resistance in the circuit.
If less than 2 Ω
4.4. Vehicle in Service Mode.
4.5. Verify a test lamp illuminates between each B+ and ignition circuit terminal at the control module harness connector.
If the test lamp does not illuminate, repair the circuit or fuse as necessary.
If the test lamp illuminates at each B+ and ignition circuit, replace the K9 body control module.

If the test lamp is always ON

4.1. Vehicle OFF, disconnect the harness connector at the K9 body control module, Vehicle in Service Mode.
4.2. Test for less than 1 V between the control circuit and ground.
If 1 V or greater, repair the short to voltage on the circuit.
If less than 1 V, replace the K9 body control module.

If the test lamp turns ON and OFF

5. Test or replace the S3 transmission shift lever.

Component Testing

Dynamic Test

1. Install a 10 A fused jumper wire between the control terminal 4 and 12 V. Momentarily install a jumper wire between the ground terminal 2 and ground.
2. Verify the solenoid turns on & off/clicks, etc.

If the solenoid does not turn on & off/clicks, etc.

Replace the S3 transmission shift lever.

If the solenoid does turn on & off/clicks, etc.

3. All OK

Repair Instructions

Perform the Diagnostic Repair Verification after completing the repair.

- Transmission Control Replacement

- Control Module References for ECM replacement, programming, and setup.

&#169© Copyright Chevrolet. All rights reserved

Symptoms - Automatic Transmission Shift Lock Control

Important: The following steps must be completed before using the symptom tables.

1. Perform the Diagnostic System Check - Vehicle before using the Symptom Tables in order to verify that all of the following are true:
   - There are no DTCs set.
   - The control modules can communicate via the serial data link.
2. Review the system operation in order to familiarise yourself with the system functions. Refer to Automatic Transmission Shift Lock Control Description and Operation .

Visual/Physical Inspection

- Inspect for aftermarket devices which could affect the operation of the automatic transmission shift lock control. Refer to Checking Aftermarket Accessories .
- Inspect the easily accessible or visible system components for obvious damage or conditions which could cause the symptom.

Intermittent

Faulty electrical connections or wiring may be the cause of intermittent conditions. Refer to Testing for Intermittent Conditions and Poor Connections

Symptom List

Refer to a symptom diagnostic procedure in order to diagnose the symptom:

Transmission Control Lever Malfunction

&#169© Copyright Chevrolet. All rights reserved

Transmission Control Lever Malfunction

Diagnostic Instructions

- Perform the Diagnostic System Check - Vehicle prior to using this diagnostic procedure.
- Review Strategy Based Diagnosis for an overview of the diagnostic approach.
- Diagnostic Procedure Instructions provides an overview of each diagnostic category.

Diagnostic Fault Information

Circuit	Short to Ground	Open/High Resistance	Short to Voltage	Signal Performance
Control	1	1	2	-
Ground	--	1	--	--

1. Transmission shift lever will not move from PARK with the brake pedal applied.
2. Transmission shift lever will move from PARK without the brake pedal applied.

Circuit/System Description

The body control module controls the transmission shift lock control solenoid actuator by providing a battery positive voltage to the solenoid when the brake pedal is applied. The BCM monitors the voltage and current flow of the control circuit.

Reference Information

Schematic Reference

Shift Lock Control Schematics

Connector End View Reference

Component Connector End Views

Description and Operation

Automatic Transmission Shift Lock Control Description and Operation

Electrical Information Reference

- Circuit Testing
- Connector Repairs
- Testing for Intermittent Conditions and Poor Connections
- Wiring Repairs

Scan Tool Reference

Control Module References for scan tool information

Circuit/System Verification

1. Vehicle in Service Mode.
2. Verify the scan tool Brake Transmission Shift Interlock Solenoid Actuator Command parameter changes from Inactive to Active when the brake pedal is applied.
   If the Brake Transmission Shift Interlock Solenoid Actuator Command does not change
   Refer to Stop Lamps Malfunction
   If the Brake Transmission Shift Interlock Solenoid Actuator Command changes
3. Verify the S3 transmission shift lever moves out of the PARK position when the brake pedal is applied.
   If the S3 transmission shift lever does not move out of the PARK position
   Refer to Circuit/System Testing.
   If the S3 transmission shift lever does move out of the PARK position
   All OK.

Circuit/System Testing

1. Vehicle OFF and all vehicle systems OFF, disconnect the harness connector at the S3 transmission shift lever. It may take up to 2 minutes for all vehicle systems to power down.
2. Test for less than 10 Ω between the ground circuit terminal 2 and ground.
   If 10 Ω or greater
   2.1. Vehicle OFF.
   2.2. Test for less than 2 Ω in the ground circuit end to end.
   If 2 Ω or greater, repair the open/high resistance in the circuit.
   If less than 2 Ω, repair the open/high resistance in the ground connection.
   If less than 10 Ω

3. Vehicle in Service Mode, connect a test lamp between the control circuit terminal 4 and the ground circuit terminal 2.
4. Verify the test lamp turns ON and OFF when commanding the Brake Transmission Shift Interlock Solenoid Actuator ON and OFF with a scan tool.

If the test lamp is always OFF

4.1. Vehicle OFF, disconnect the harness connector at the K9 body control module.
4.2. Test for infinite resistance between the control circuit and ground.
If less than infinite resistance, repair the short to ground on the circuit.
If infinite resistance
4.3. Test for less than 2 Ω in the control circuit end to end.
If 2 Ω or greater, repair the open/high resistance in the circuit.
If less than 2 Ω
4.4. Vehicle in Service Mode.
4.5. Verify a test lamp illuminates between each B+ and ignition circuit terminal at the control module harness connector.
If the test lamp does not illuminate, repair the circuit or fuse as necessary.
If the test lamp illuminates at each B+ and ignition circuit, replace the K9 body control module.

If the test lamp is always ON

4.1. Vehicle OFF, disconnect the harness connector at the K9 body control module, Vehicle in Service Mode.
4.2. Test for less than 1 V between the control circuit and ground.
If 1 V or greater, repair the short to voltage on the circuit.
If less than 1 V, replace the K9 body control module.

If the test lamp turns ON and OFF

5. Test or replace the S3 transmission shift lever.

Component Testing

Dynamic Test

1. Install a 10 A fused jumper wire between the control terminal 4 and 12 V. Momentarily install a jumper wire between the ground terminal 2 and ground.
2. Verify the solenoid turns on & off/clicks, etc.

If the solenoid does not turn on & off/clicks, etc.

Replace the S3 transmission shift lever.

If the solenoid does turn on & off/clicks, etc.

3. All OK

Repair Instructions

Perform the Diagnostic Repair Verification after completing the repair.

- Transmission Control Replacement

- Control Module References for ECM replacement, programming, and setup.

&#169© Copyright Chevrolet. All rights reserved

Automatic Transmission Shift Lock Control Description and Operation

The automatic transmission park lock control system is a safety device that prevents an inadvertent shift out of PARK. The driver must press the brake pedal before moving the park lever out of the PARK position. The system consists of the following components:

- The automatic transmission park lock solenoid (serviced as the automatic transmission shift lock actuator), is located within the floor shift control assembly.
- The body control module, which controls the voltage supply circuit of the park lock control solenoid.
- The engine control module.

The body control module controls the voltage to the park lock control solenoid through the park lock control solenoid controlled voltage circuit. The following conditions must be met before the body control module will supply voltage to the park lock solenoid:

- The ignition is in the ON position.
- The engine control module sends an input via GMLAN serial data to the body control module indicating the transmission is in the PARK position.
- The body control module determines the brake pedal is applied according the brake pedal position.

Since the park lock control solenoid is permanently grounded, the body control module supplies voltage to the automatic transmission park lock control solenoid, unlocking the park lever allowing the driver to move the park lever out of the PARK position as the solenoid energises. When the brake pedal is not applied, the body control module turns the control voltage output of the park lock control solenoid OFF, de-energizing the park lock control solenoid. The de-energised solenoid mechanically locks the park lever in the PARK position.

&#169© Copyright Chevrolet. All rights reserved

Rear Bumper Fascia Removal and Installation - Ampera

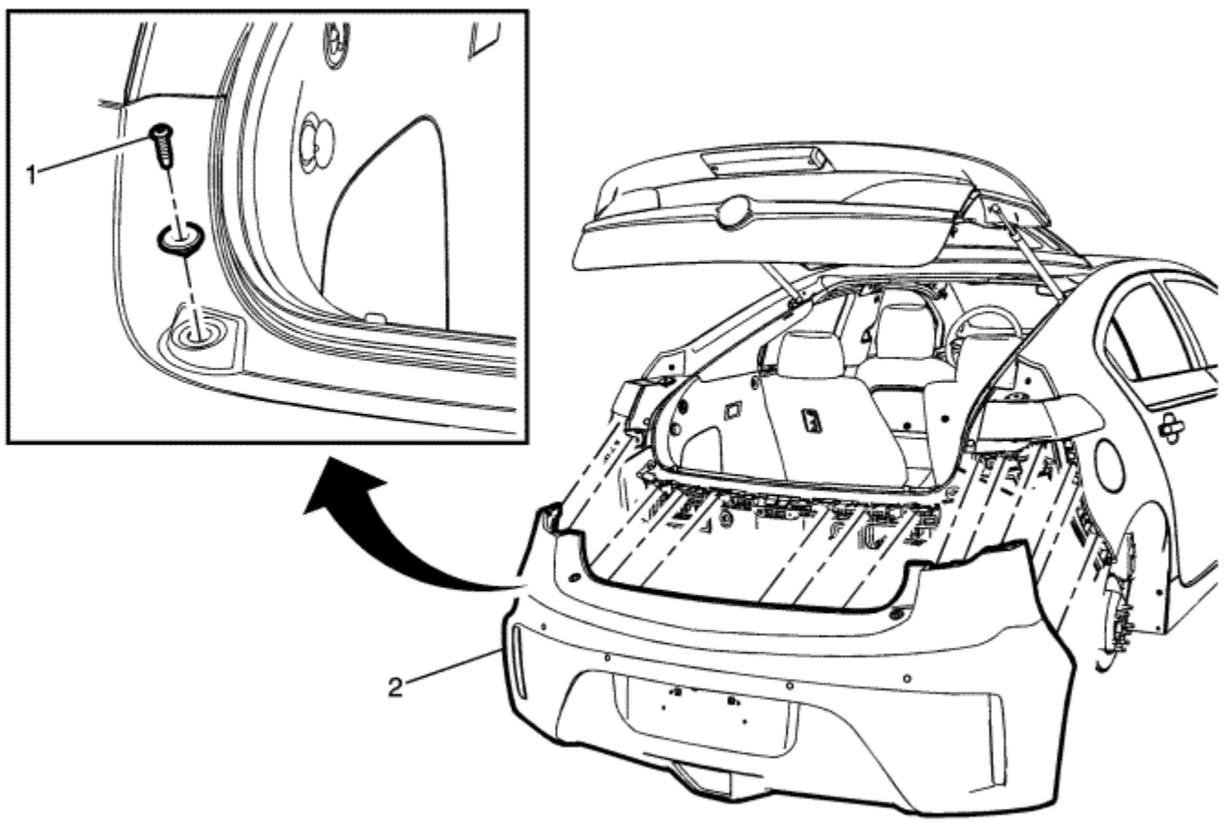

Callout	Component Name
Preliminary Procedures 1. Remove the underbody rear air deflector to fascia bolts. Refer to Underbody Rear Air Deflector Replacement . 2. Remove the rear screws from the wheelhouse liner. Refer to Rear Wheelhouse Panel Liner Replacement .	

1	Rear Bumper Fascia Upper Screw (Qty: 2) **Caution :** Refer to Fastener Caution in the Preface section. **Tighten** 3 N·m (27 lb in)
2	Rear Bumper Fascia **Procedure** 1. Reposition the lower liftgate weatherstrip to access the centre fascia guide. 2. Insert a small flat-bladed tool into the fascia centre guide and depress the snaps one at a time and pull on the fascia working from one side to the other to remove the fascia from the rear fascia guides. 3. Disconnect the electrical connectors.

© Copyright Chevrolet. All rights reserved

Front Bumper Fascia Removal and Installation - Ampera

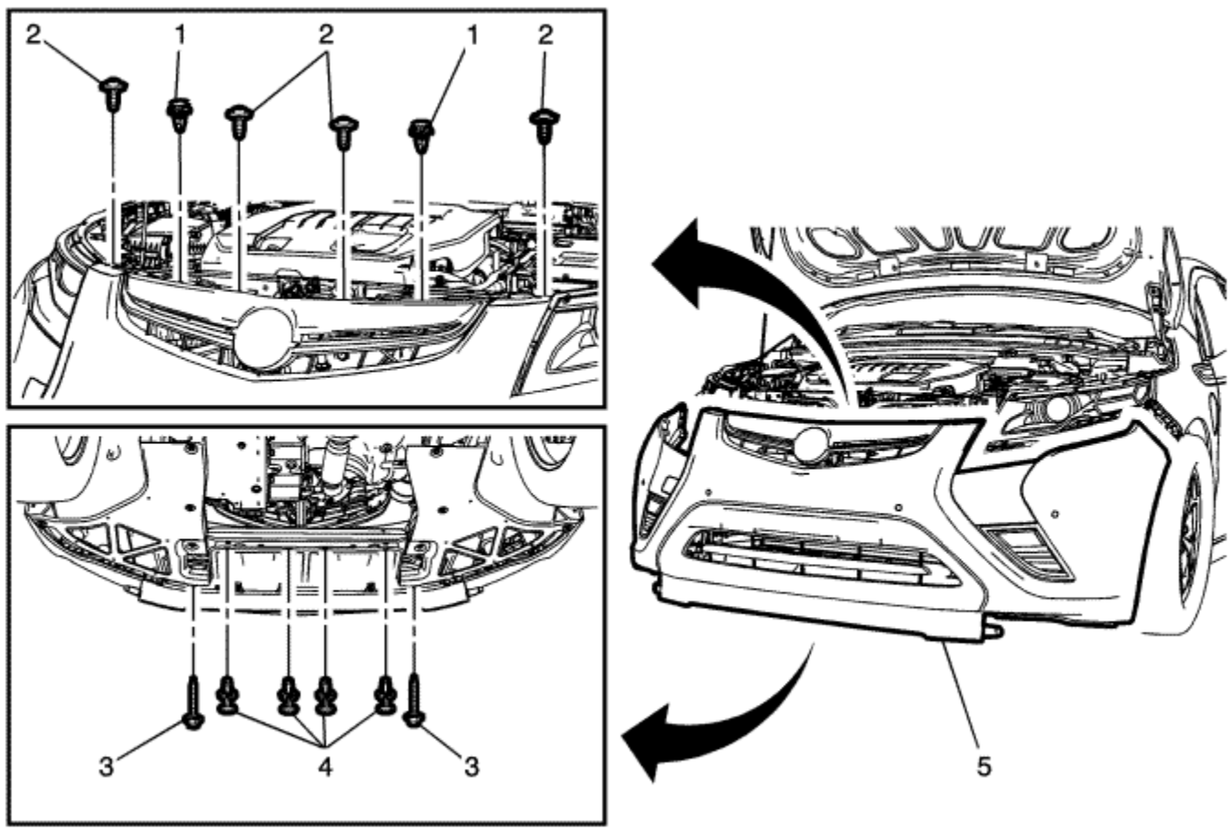

Callout	Component Name
Preliminary Procedures	

1. Remove the front end panel outer deflector. Refer to Front End Panel Outer Deflector Replacement : Volt → Ampera .
2. Remove the front compartment front sight shield. Refer to Front Compartment Front Sight Shield Replacement : Volt → Ampera .
3. Remove the windscreen washer solvent container filler tube. Refer to Windscreen Washer Solvent Container Filler Tube Replacement .

4. Remove the side four front screws from the front wheelhouse liners. Refer to Front Wheelhouse Front Liner Replacement .
5. Loosen the 2 lower impact bar bolts. Refer to Front Bumper Lower Impact Bar Replacement : Ampera .

1	Front Bumper Fascia Upper Push-In Retainer (Qty: 2)
2	Front Bumper Fascia Upper Screw (Qty: 4) **Caution :** Refer to Fastener Caution in the Preface section. **Tighten** 3 N·m (27 lb in)
3	Front Bumper Fascia Lower Screw (Qty: 2) **Tighten** 3 N·m (27 lb in)
4	Front Bumper Fascia Lower Push-In Retainer (Qty: 4)
5	Front Bumper Fascia **Procedure** 1. Carefully push a small nylon wedge between the fascia and the front fascia retainers. Insert a small flat-bladed tool into the fascia slot and depress the snaps one at a time and pull on the fascia at the same time to gradually remove the fascia from the front fascia retainers of the wing. 2. Disconnect any electrical connectors. 3. Transfer any parts as needed.

© Copyright Chevrolet. All rights reserved

Bonnet Primary and Secondary Catch Replacement - Ampera

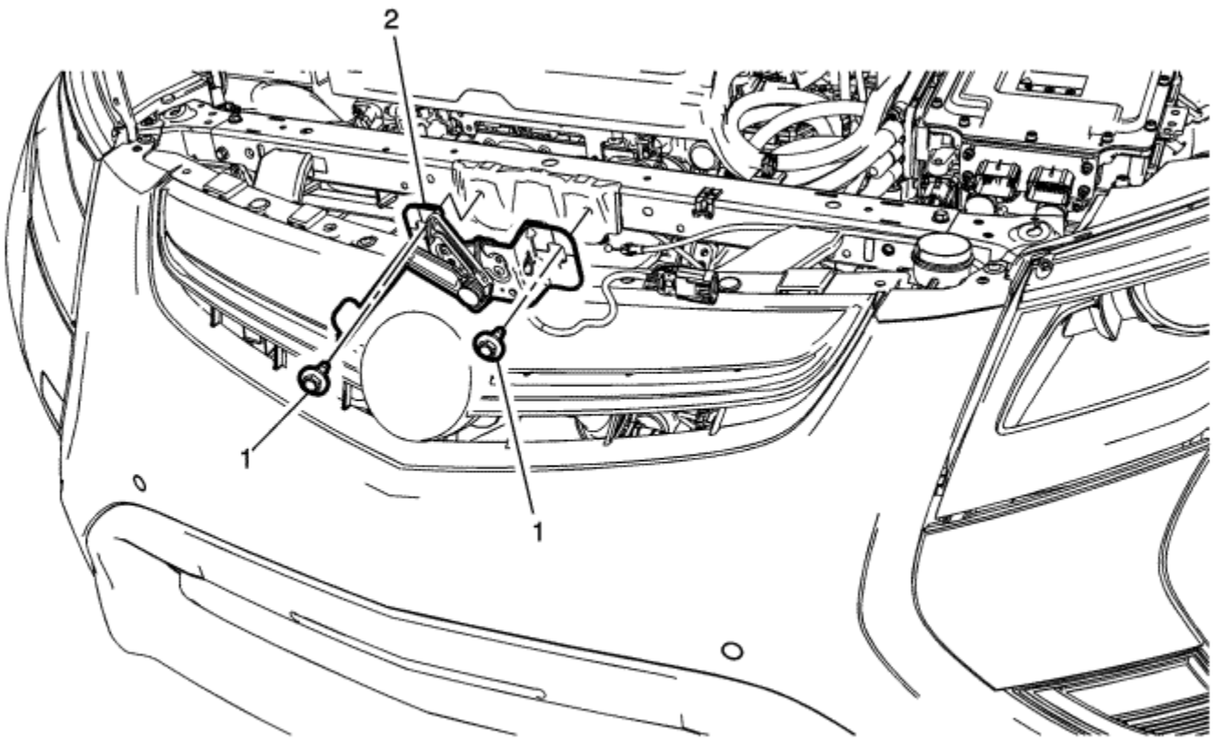

Callout	Component Name
Preliminary Procedure Remove the front compartment front sight shield. Refer to Front Compartment Front Sight Shield Replacement : Volt → Ampera .	
	Bonnet Primary and Secondary Latch Bolt (Qty: 2)

1	**Caution :** Refer to Fastener Caution in the Preface section. **Tighten** 25 N·m (18 lb ft)
2	Bonnet Primary and Secondary Catch **Procedure** Disconnect the bonnet release cable and the electrical connector.

© Copyright Chevrolet. All rights reserved

Front Compartment Side Sight Shield Replacement - Ampera

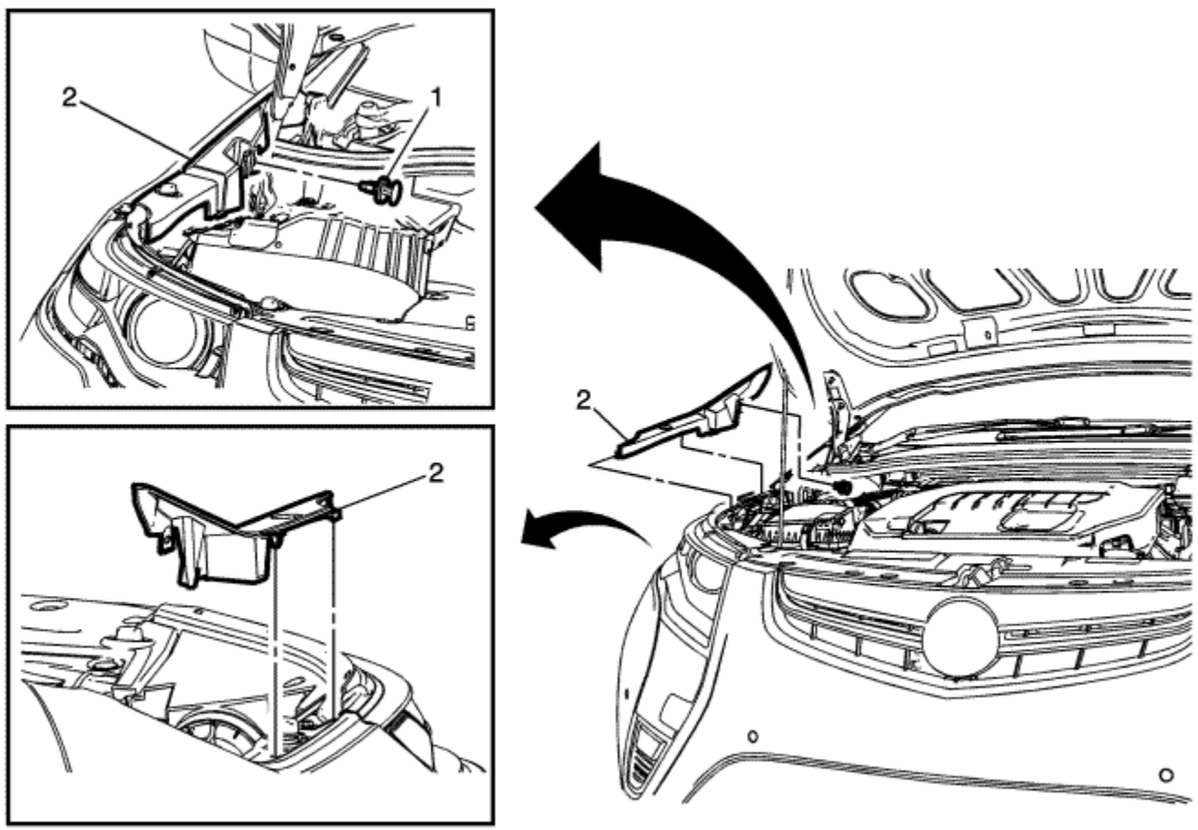

Callout	Component Name
1	Front Compartment Side Sight Shield Push-In Retainer
2	Front Compartment Side Sight Shield **Procedure**

	1. Release the retainer on the bottom of the sight shield. 2. Slide the sight shield rearward and upward to remove the front compartment side sight shield.

© Copyright Chevrolet. All rights reserved

Headlamp Replacement - Ampera

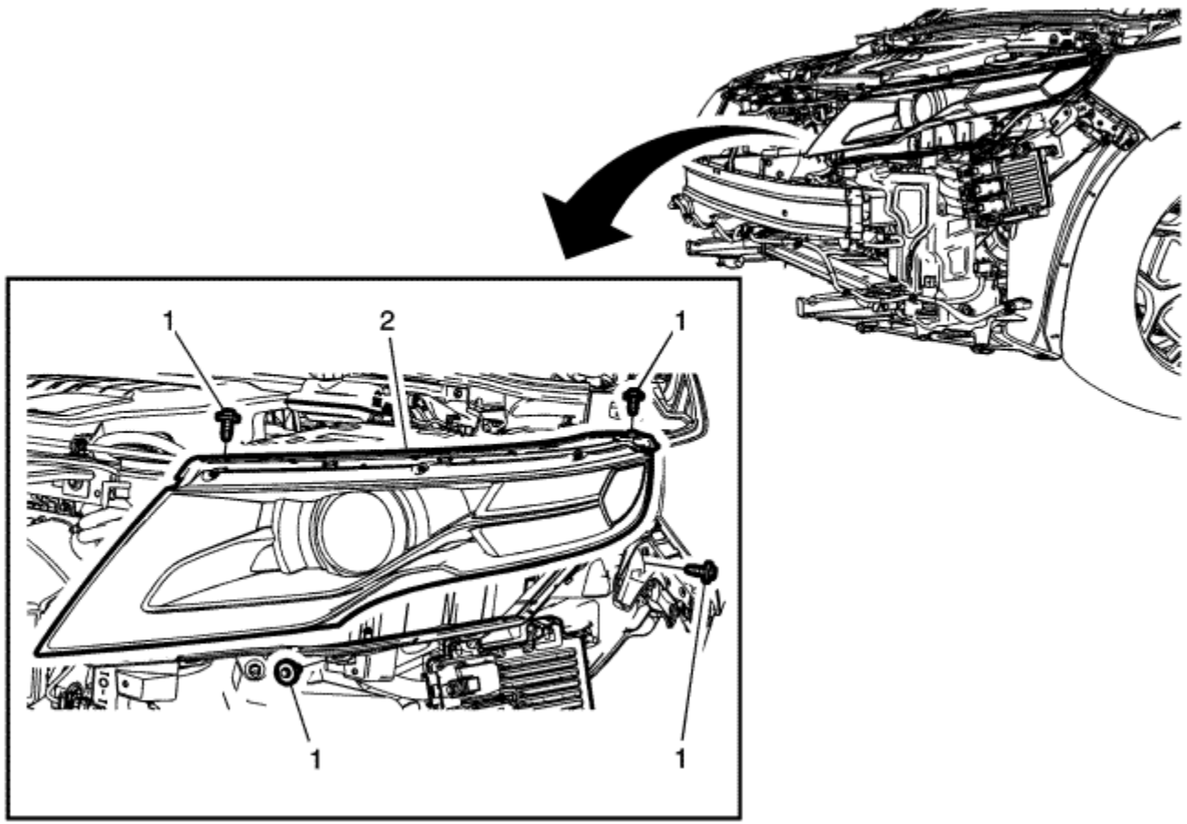

Callout	Component Name
Preliminary Procedures	

1. Remove the front bumper fascia. Refer to Front Bumper Fascia Removal and Installation : Volt → Ampera .
2. Remove the front compartment side sight shield. Refer to Front Compartment Side Sight Shield Replacement : Volt → Ampera .
3. Disconnect the headlamp electrical connection.

1	Headlamp Screw (Qty: 4) **Caution:** Refer to Fastener Caution in the Preface section. **Tighten** 2.5 N·m (22 lb in)
2	Headlamp Assembly **Warning:** Refer to Halogen Bulb Warning in the Preface section. **Procedure** 1. Remove the headlamp assembly from the vehicle. 2. Transfer the headlamp bulb accessory cover and bulb socket as needed. 3. Align the headlamps after replacement. Refer to Headlamp Alignment . **Note:** The drive motor battery charger is below the right front headlamp assembly.

© Copyright Chevrolet. All rights reserved

Bonnet Replacement - Ampera

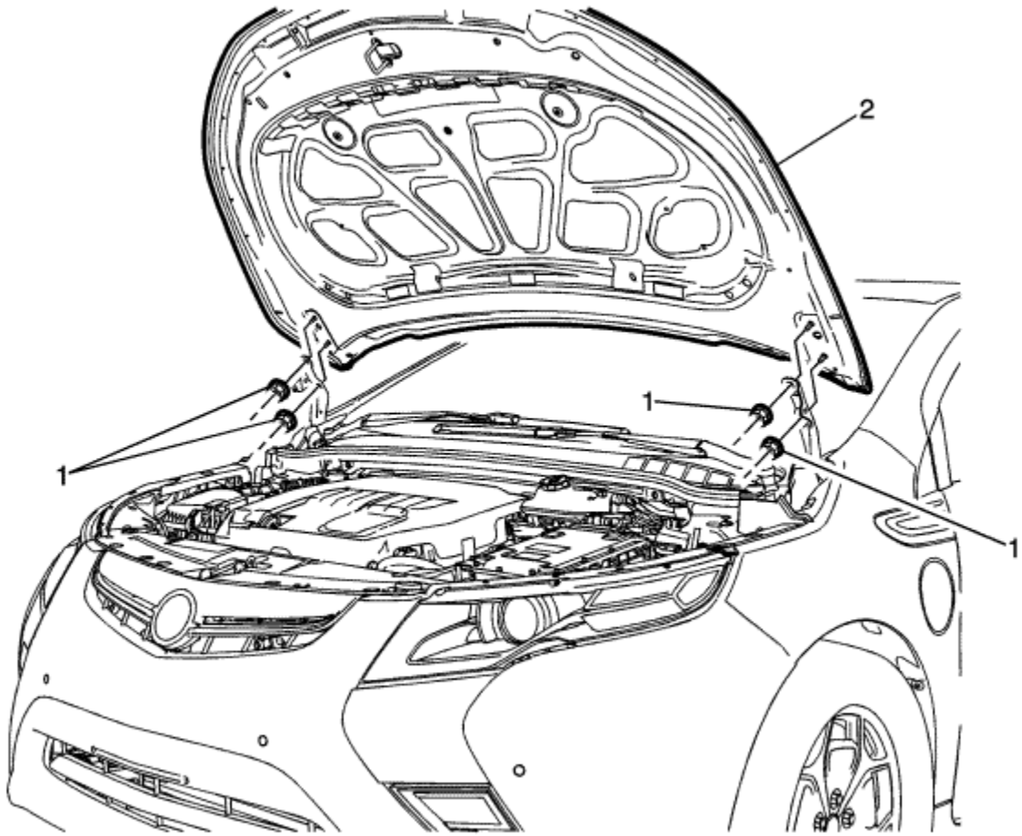

Callout	Component Name
1	Bonnet Hinge Nut (Qty: 4) **Caution :** Refer to Fastener Caution in the Preface section. **Procedure**

	Mark the location of the bonnet hinge fasteners to the bonnet hinges with a grease pencil to help with alignment. **Tighten** 25 N·m (18 lb ft)
2	Bonnet **Procedure** 1. Disconnect the wiper washer hoses from the bonnet. 2. Transfer parts as needed. 3. Adjust the hood. Refer to Bonnet Adjustment .

© Copyright Chevrolet. All rights reserved

Front Compartment Front Sight Shield Replacement - Ampera

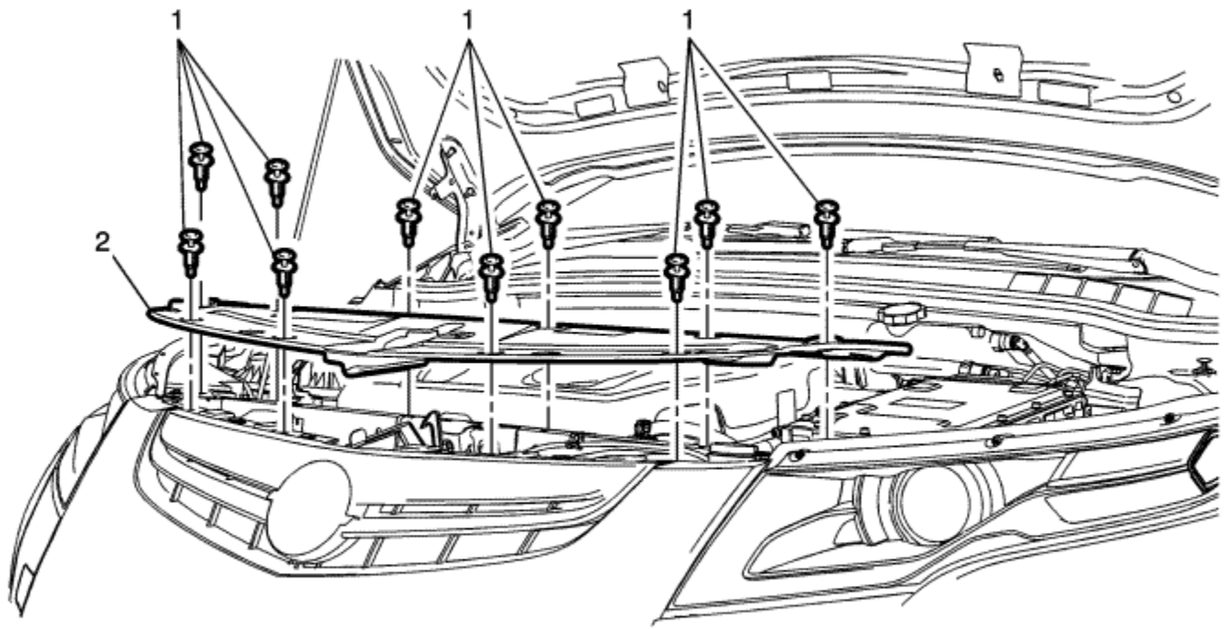

Callout	Component Name
1	Front Compartment Front Sight Shield Plastic Retainer (Qty: 10)
2	Front Compartment Front Sight Shield

© Copyright Chevrolet. All rights reserved

Front End Panel Outer Deflector Replacement - Ampera

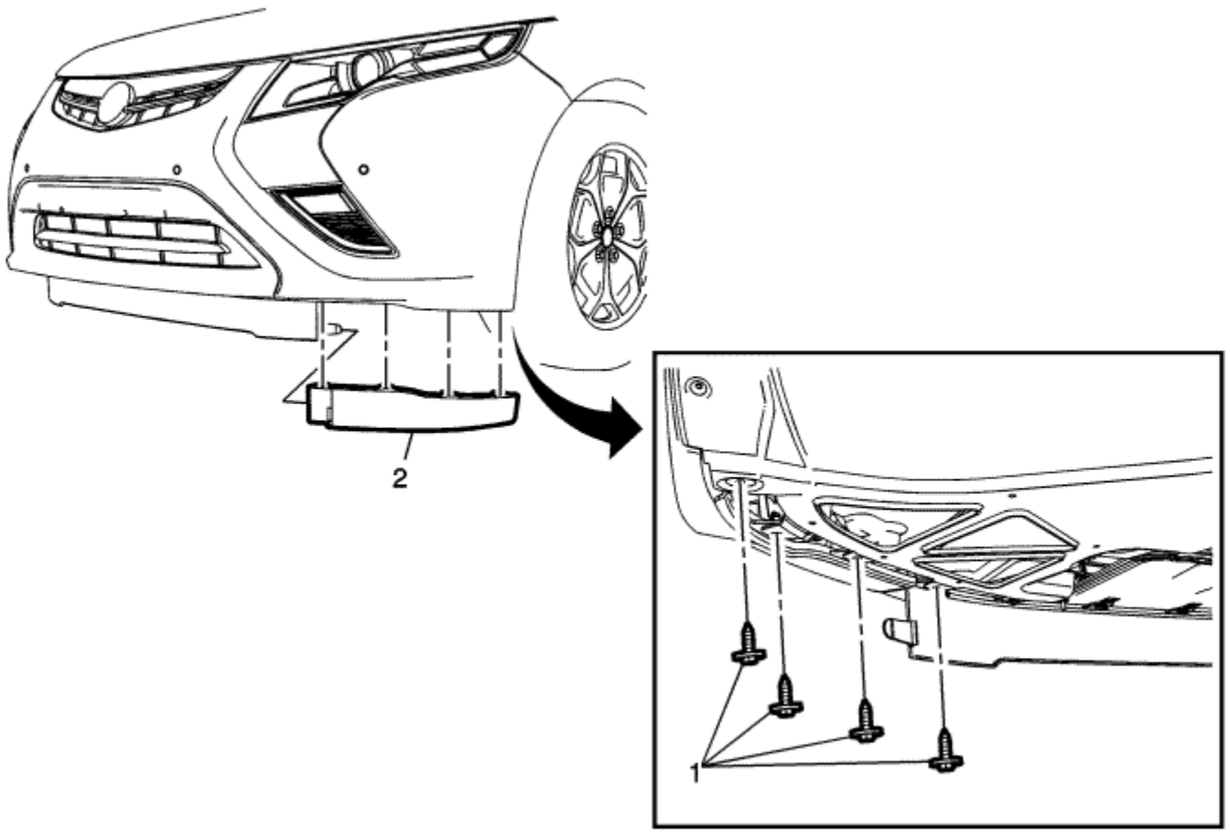

Callout	Component Name
1	Front End Panel Outer Deflector Bolt (Qty: 4) **Caution :** Refer to Fastener Caution in the Preface section. **Tighten** 3 N·m (27 lb in)

2	Front End Panel Outer Deflector

© Copyright Chevrolet. All rights reserved

Front Bumper Lower Fascia Centre Grille Replacement - Ampera

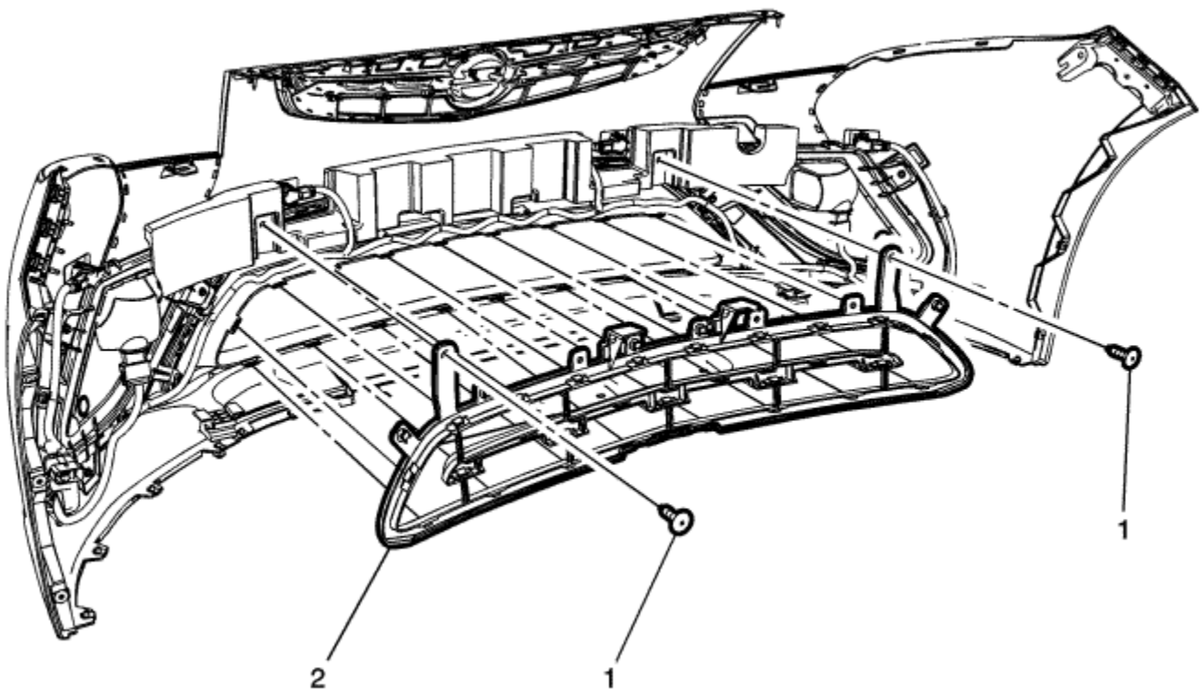

Callout	Component Name
Preliminary Procedure 1. Remove the front bumper fascia. Refer to Front Bumper Fascia Removal and Installation : Volt → Ampera . 2. Reposition the forward lamp harness from the topside of the lower grille assembly.	

1	Front Bumper Lower Fascia Centre Grille Retainer (Qty: 2)
2	Front Bumper Lower Fascia Centre Grille **Procedure** 1. Release the 18 grille tabs from the front bumper lower fascia centre grille. 2. Pull the front bumper lower fascia centre grille from the rear of the front bumper fascia.

© Copyright Chevrolet. All rights reserved

Rear Bumper Energy Absorber Replacement - Ampera

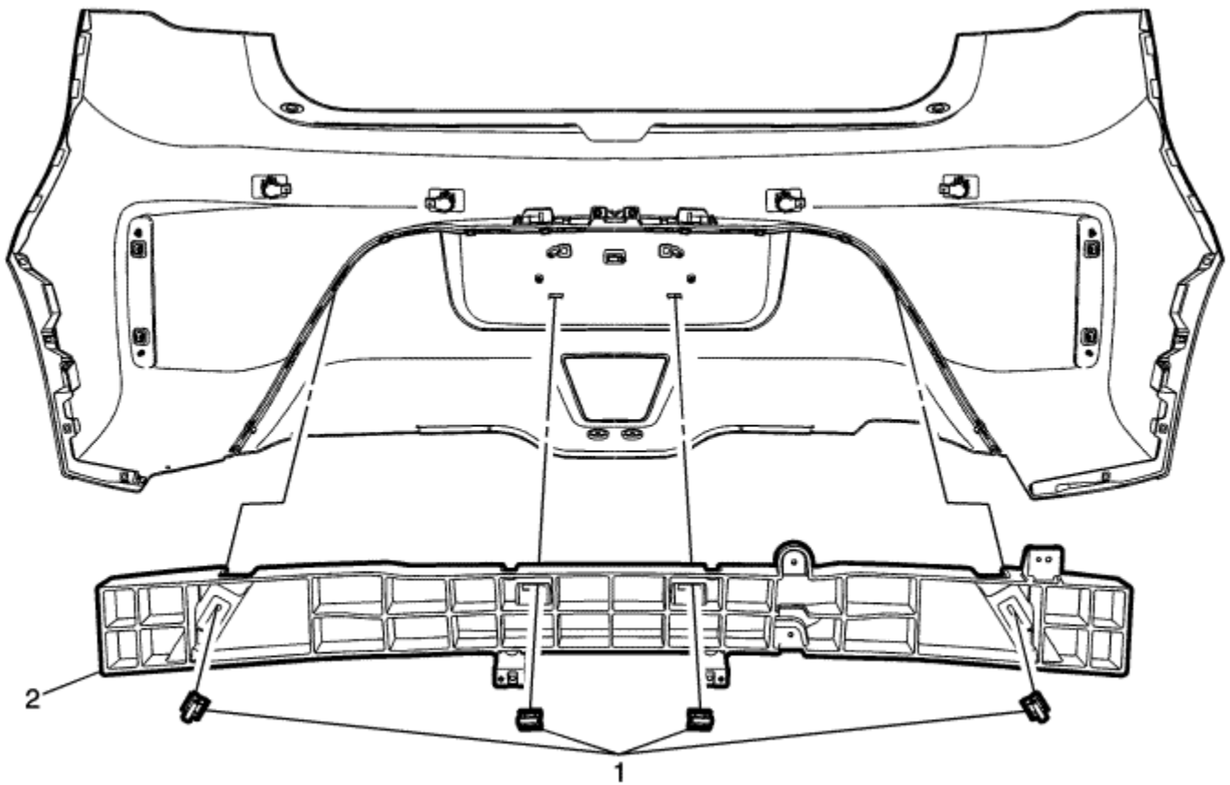

Callout	Component Name
Preliminary Procedures 1. Remove the rear bumper fascia. Refer to Rear Bumper Fascia Removal and Installation : Volt → Ampera . 2. Remove the back-up lamp. Refer to Reverse Lamp Replacement .	

1	Rear Bumper Energy Absorber Retainer (Qty: 4) **Procedure** 1. Disconnect the electrical connector/harness. 2. Disengage the retainers.
2	Rear Bumper Energy Absorber

© Copyright Chevrolet. All rights reserved

Driver

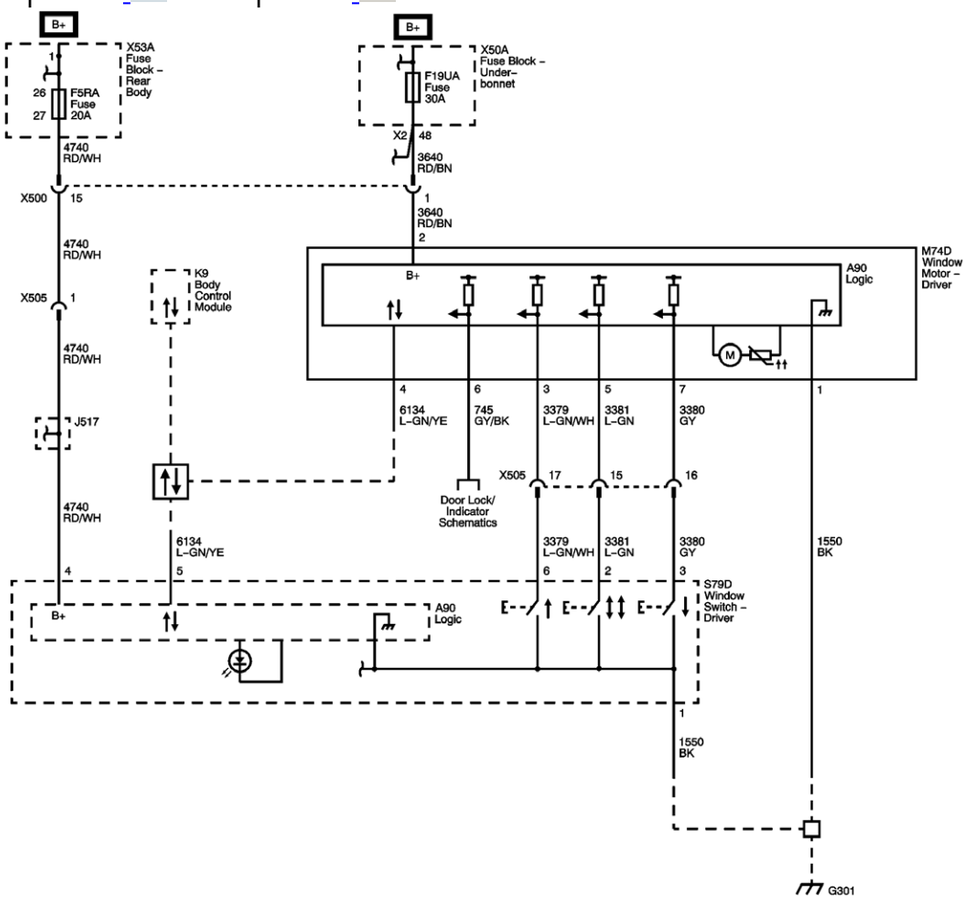
B+
X53A
Fuse Block – Rear Body
26
27
F5RA
Fuse 20A
4740 RD/WH
X500
15
4740 RD/WH
X505
1
4740 RD/WH
J517
4740 RD/WH
4
6134 L-GN/YE
5
B+
A90 Logic
K9 Body Control Module
6134 L-GN/YE
B+
X50A
Fuse Block – Under-bonnet
F19UA
Fuse 30A
X2
48
3640 RD/BN
1
3640 RD/BN
2
B+
A90 Logic
M74D Window Motor – Driver
4
6134 L-GN/YE
6
745 GY/BK
3
3379 L-GN/WH
5
3381 L-GN
7
3380 GY
1
Door Lock/ Indicator Schematics
X505
17
15
16
3379 L-GN/WH
3381 L-GN
3380 GY
1550 BK
6
2
3
S79D Window Switch – Driver
1
1550 BK
G301

Master Electrical Component List

Power Windows Description and Operation

Passenger

F2RA, F3RA, F4RA, F5RA, F7RA, F8RA, F10RA, F12RA and F13RA Fuses

F10UA, F11UA, F12UA, F15UA, F17UA, F19UA and F39UA Fuses

F2RA, F3RA, F4RA, F5RA, F7RA, F8RA, F10RA, F12RA and F13RA Fuses

Data Communication Schematics

Door Ajar Switches

G301 and G406

© Copyright Chevrolet. All rights reserved

Passenger

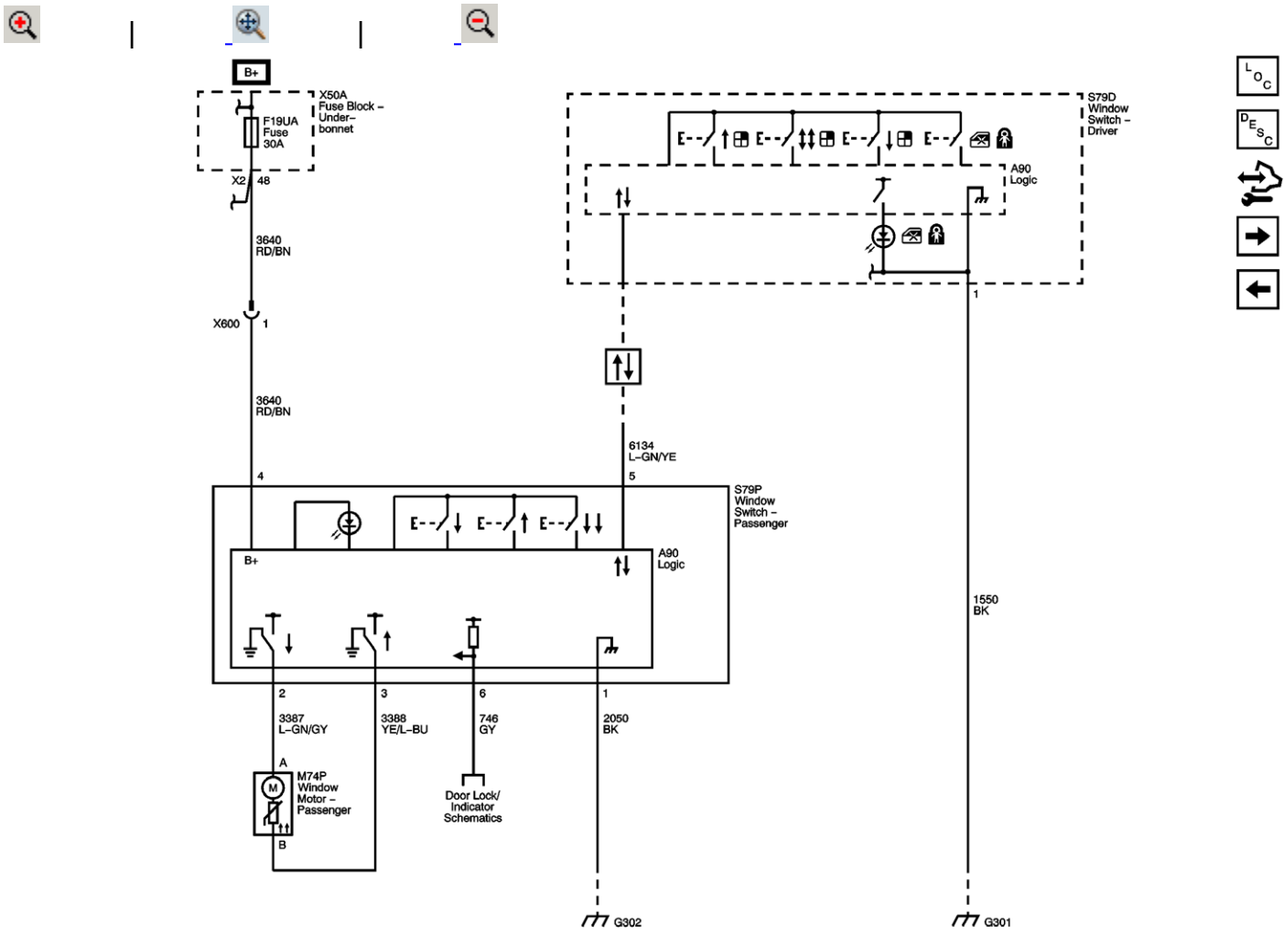
B+
X50A
Fuse Block – Under–bonnet
F19UA
Fuse
30A
X2
48
3640
RD/BN
X600
1
3640
RD/BN
4
S79D
Window
Switch –
Driver
A90
Logic
1
6134
L–GN/YE
5
S79P
Window
Switch –
Passenger
B+
A90
Logic
1550
BK
2
3387
L–GN/GY
3
3388
YE/L–BU
6
746
GY
1
2050
BK
A
M74P
Window
Motor –
Passenger
B
Door Lock/
Indicator
Schematics
G302
G301

Master Electrical Component List

Power Windows Description and Operation

Rear

Driver

F10UA, F11UA, F12UA, F15UA, F17UA, F19UA and F39UA Fuses

G301 and G406

Data Communication Schematics

Door Ajar Switches

G302

G301 and G406

© Copyright Chevrolet. All rights reserved

Rear

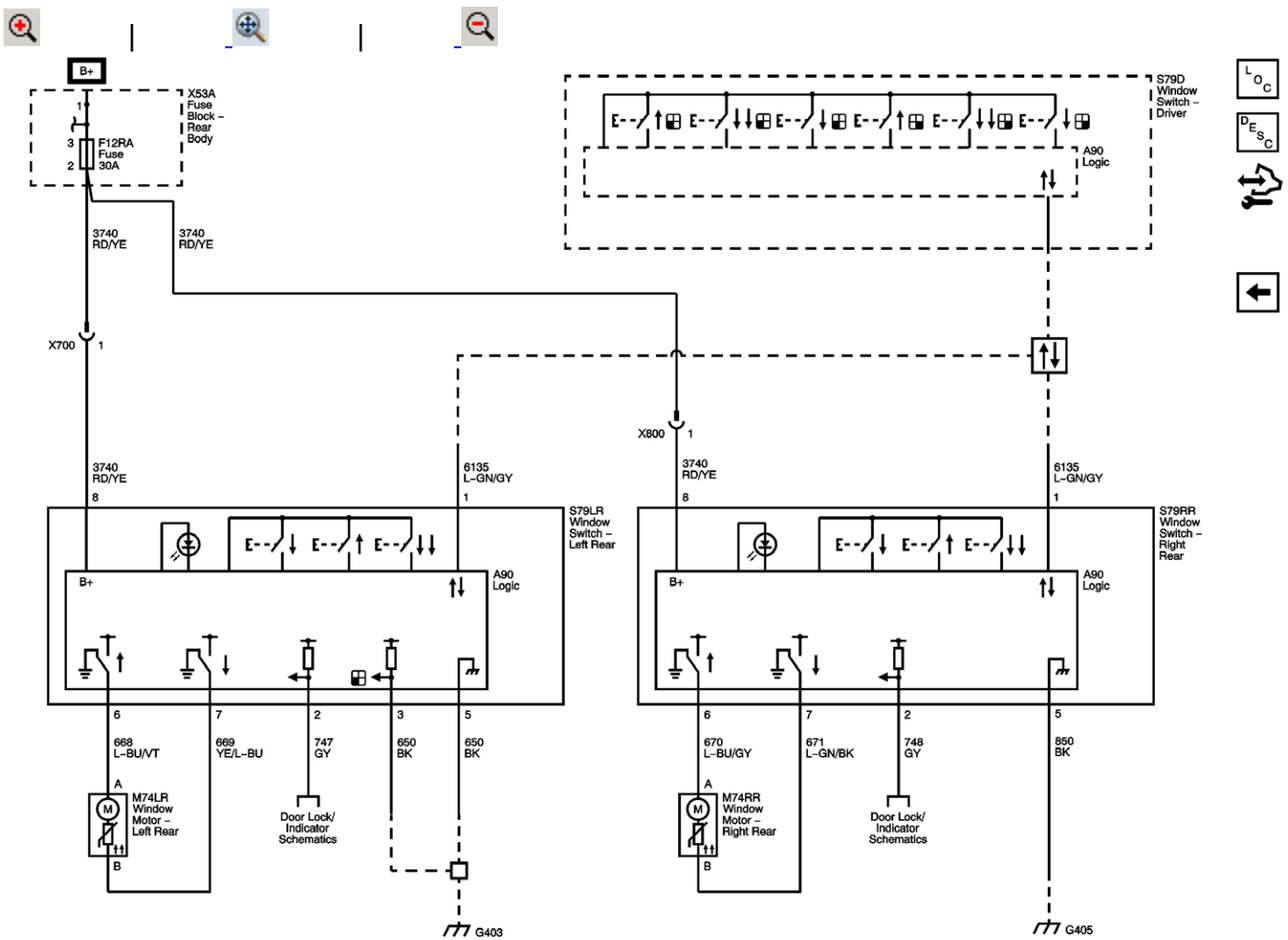
B+
X53A
Fuse
Block –
Rear
Body
F12RA
Fuse
30A
3740
RD/YE
3740
RD/YE
S79D
Window
Switch –
Driver
A90
Logic
X700
X800
6135
L–GN/GY
S79LR
Window
Switch –
Left Rear
S79RR
Window
Switch –
Right
Rear
668
L–BU/VT
669
YE/L–BU
747
GY
650
BK
650
BK
670
L–BU/GY
671
L–GN/BK
748
GY
850
BK
M74LR
Window
Motor –
Left Rear
M74RR
Window
Motor –
Right Rear
Door Lock/
Indicator
Schematics
G403
G405

Master Electrical Component List

Power Windows Description and Operation

Passenger

F2RA, F3RA, F4RA, F5RA, F7RA, F8RA, F10RA, F12RA and F13RA Fuses

Data Communication Schematics

Door Ajar Switches

G403

G405

© Copyright Chevrolet. All rights reserved

F6UA, F9UA, F22UA, F23UA, F40UA, F41UA and F43UA Fuses

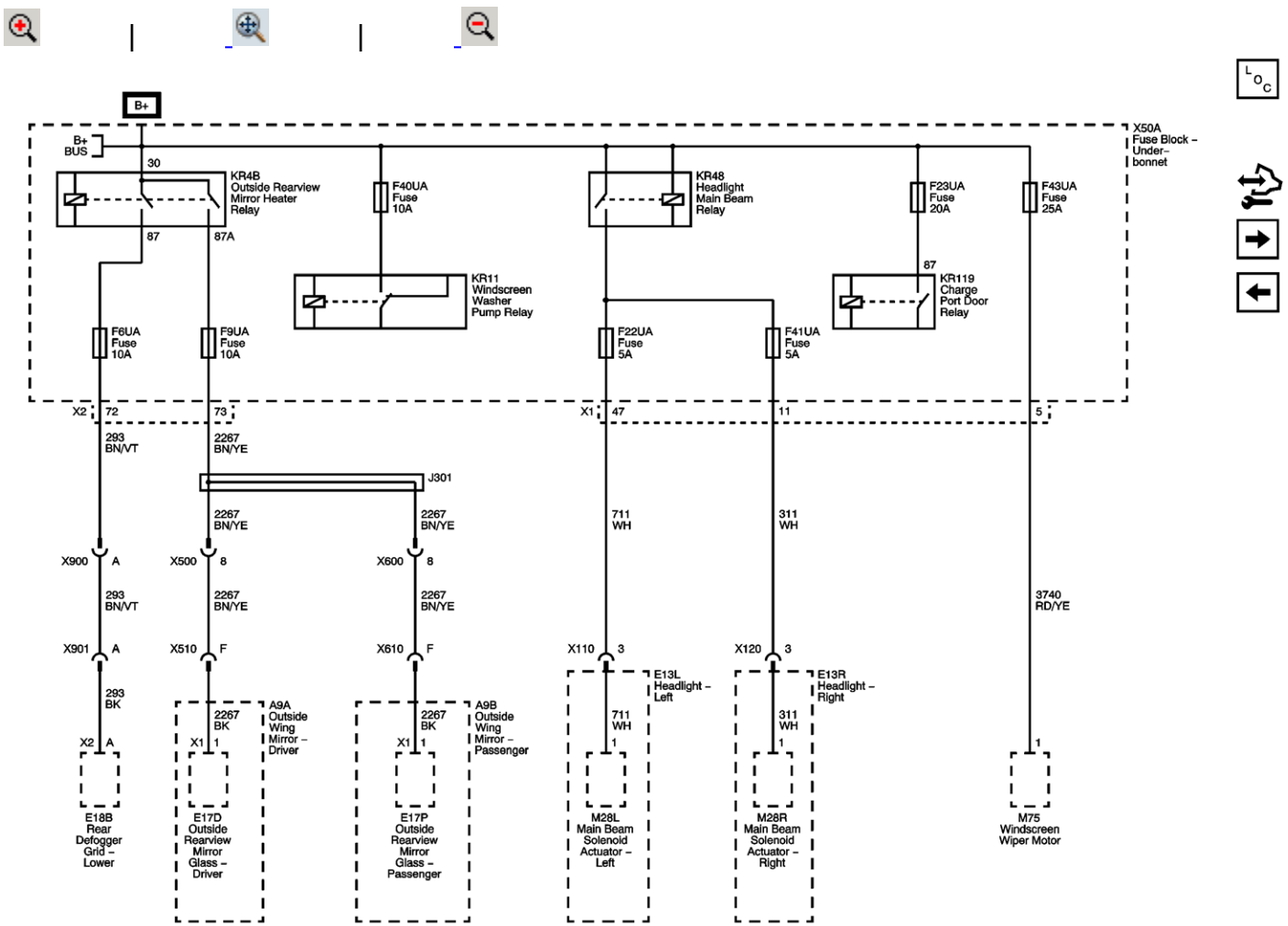

Master Electrical Component List

F10UA, F11UA, F12UA, F15UA, F17UA, F19UA and F39UA Fuses

F1UA, F2UA, F3UA, F4UA, F21UA, F30UA and F34UA Fuses

Demister

Windscreen Wiper/Washer

Full Beam

Parking Brake System Schematics

© Copyright Chevrolet. All rights reserved

F6RA, F11RA, F14RA and F16RA Fuses

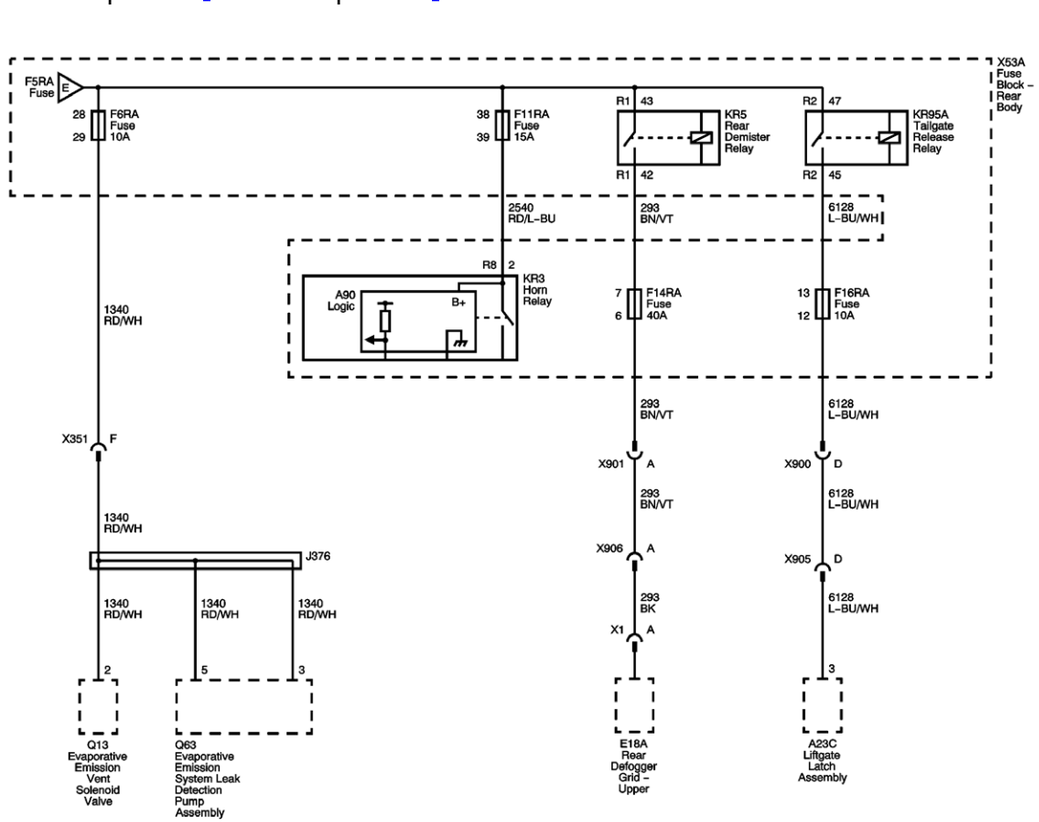

Master Electrical Component List

F2RA, F3RA, F4RA, F5RA, F7RA, F8RA, F10RA, F12RA and F13RA Fuses

Demister

Tailgate Release

Horns

© Copyright Chevrolet. All rights reserved

G103, G104 and G105

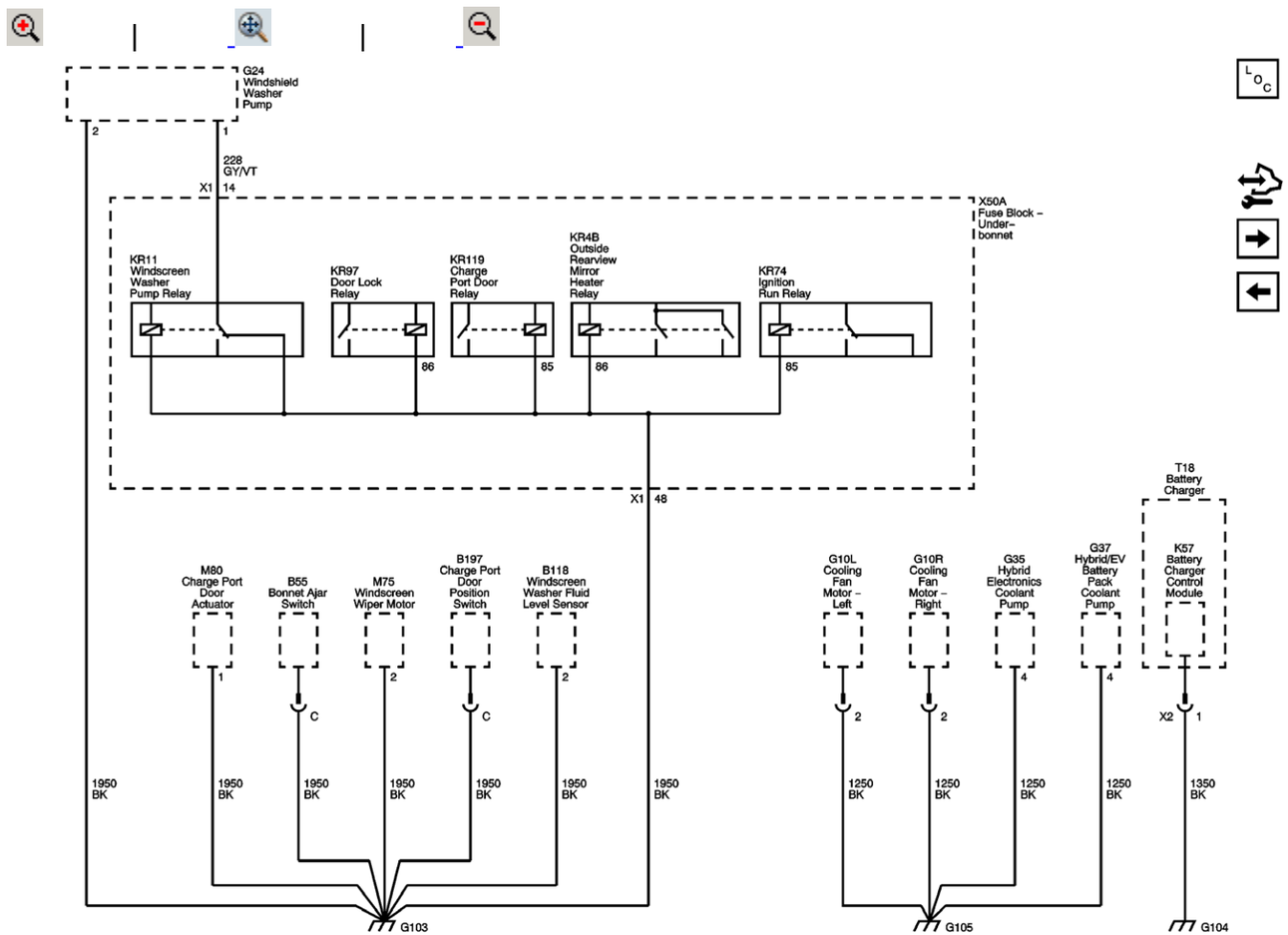

Master Electrical Component List

G106, G109, G110, G112, G113 and G117

G101 and G102

Windscreen Wiper/Washer

© Copyright Chevrolet. All rights reserved

G403

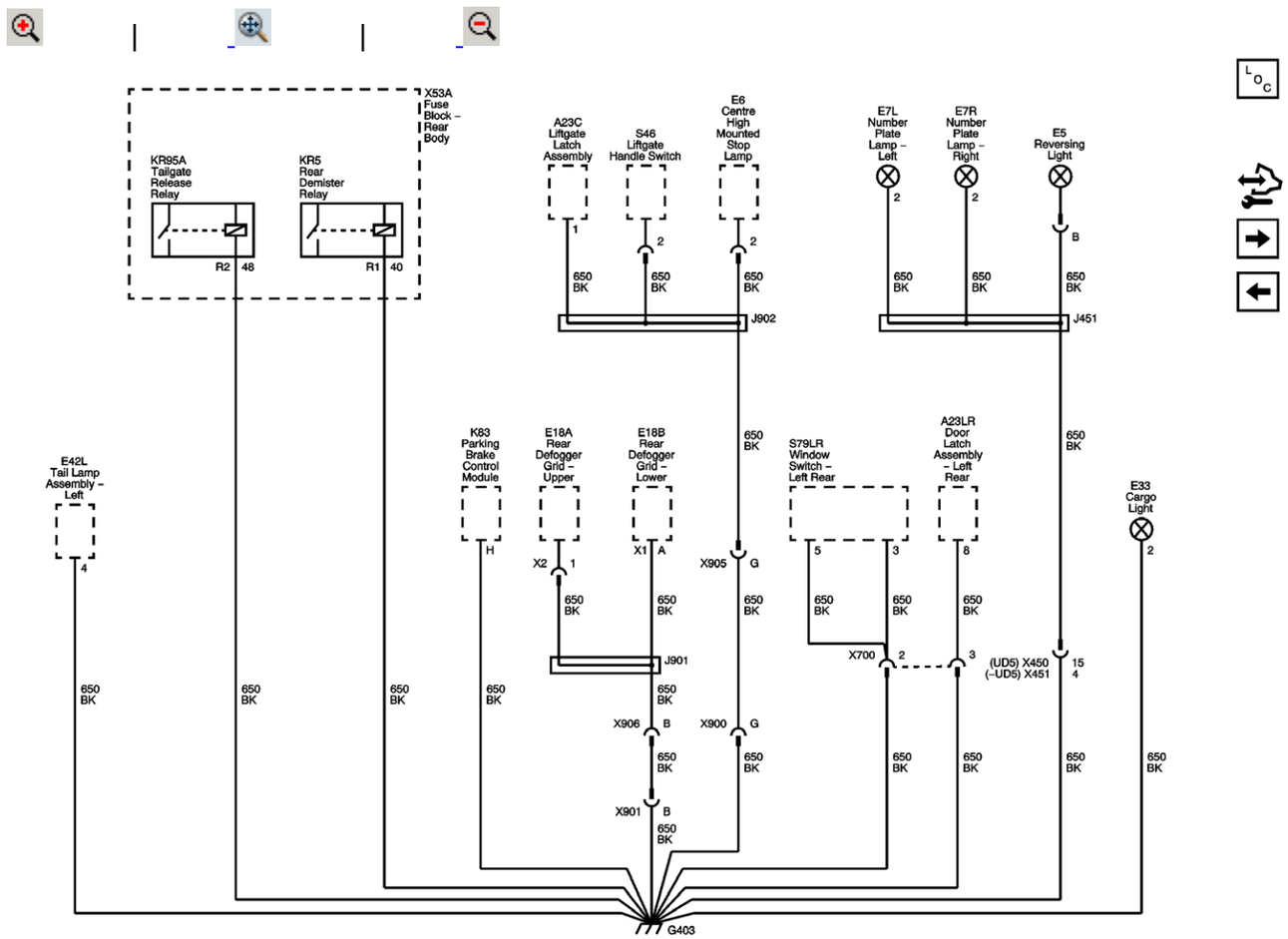
X53A
Fuse Block – Rear Body
KR95A
Tailgate Release Relay
KR5
Rear Demister Relay
R2 48
R1 40
A23C
Liftgate Latch Assembly
S46
Liftgate Handle Switch
E6
Centre High Mounted Stop Lamp
J902
E7L
Number Plate Lamp – Left
E7R
Number Plate Lamp – Right
E5
Reversing Light
J451
E42L
Tail Lamp Assembly – Left
K83
Parking Brake Control Module
E18A
Rear Defogger Grid – Upper
E18B
Rear Defogger Grid – Lower
J901
S79LR
Window Switch – Left Rear
A23LR
Door Latch Assembly – Left Rear
X700
X905
X900
X906
X901
(UD5) X450
(–UD5) X451
E33
Cargo Light
650 BK
G403

Master Electrical Component List

G405

G302

Tailgate Release

Demister

© Copyright Chevrolet. All rights reserved

G204

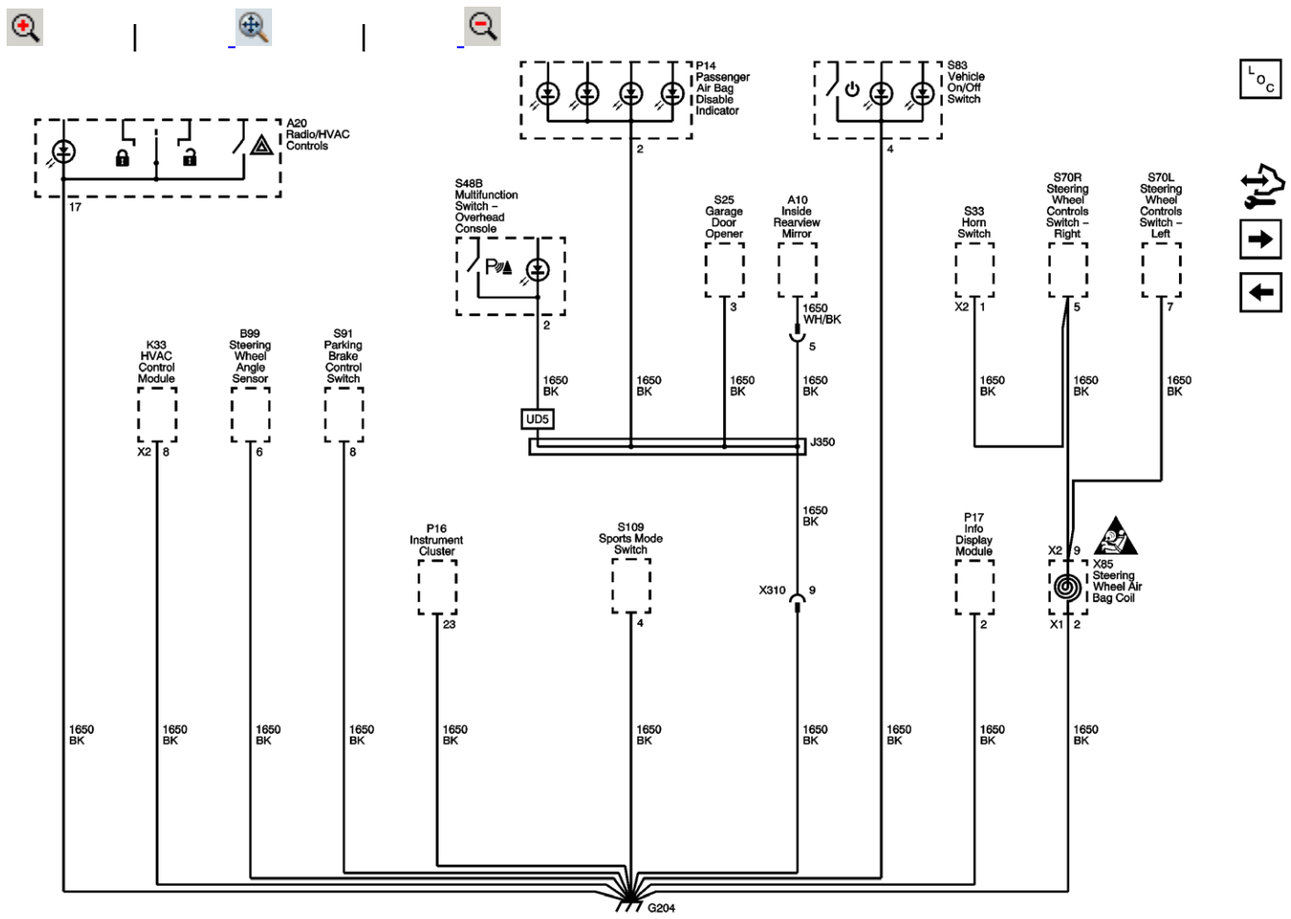
A20
Radio/HVAC
Controls
17
P14
Passenger
Air Bag
Disable
Indicator
2
S83
Vehicle
On/Off
Switch
4
S48B
Multifunction
Switch –
Overhead
Console
2
S25
Garage
Door
Opener
3
A10
Inside
Rearview
Mirror
1650
WH/BK
5
S33
Horn
Switch
X2 1
S70R
Steering
Wheel
Controls
Switch –
Right
5
S70L
Steering
Wheel
Controls
Switch –
Left
7
K33
HVAC
Control
Module
X2 8
B99
Steering
Wheel
Angle
Sensor
6
S91
Parking
Brake
Control
Switch
8
1650
BK
UD5
J350
P16
Instrument
Cluster
23
S109
Sports Mode
Switch
4
X310
9
P17
Info
Display
Module
2
X2 9
X85
Steering
Wheel Air
Bag Coil
X1 2
G204

Master Electrical Component List

G301 and G406

202

Master Electrical Schematic Icons

© Copyright Chevrolet. All rights reserved

G301 and G406

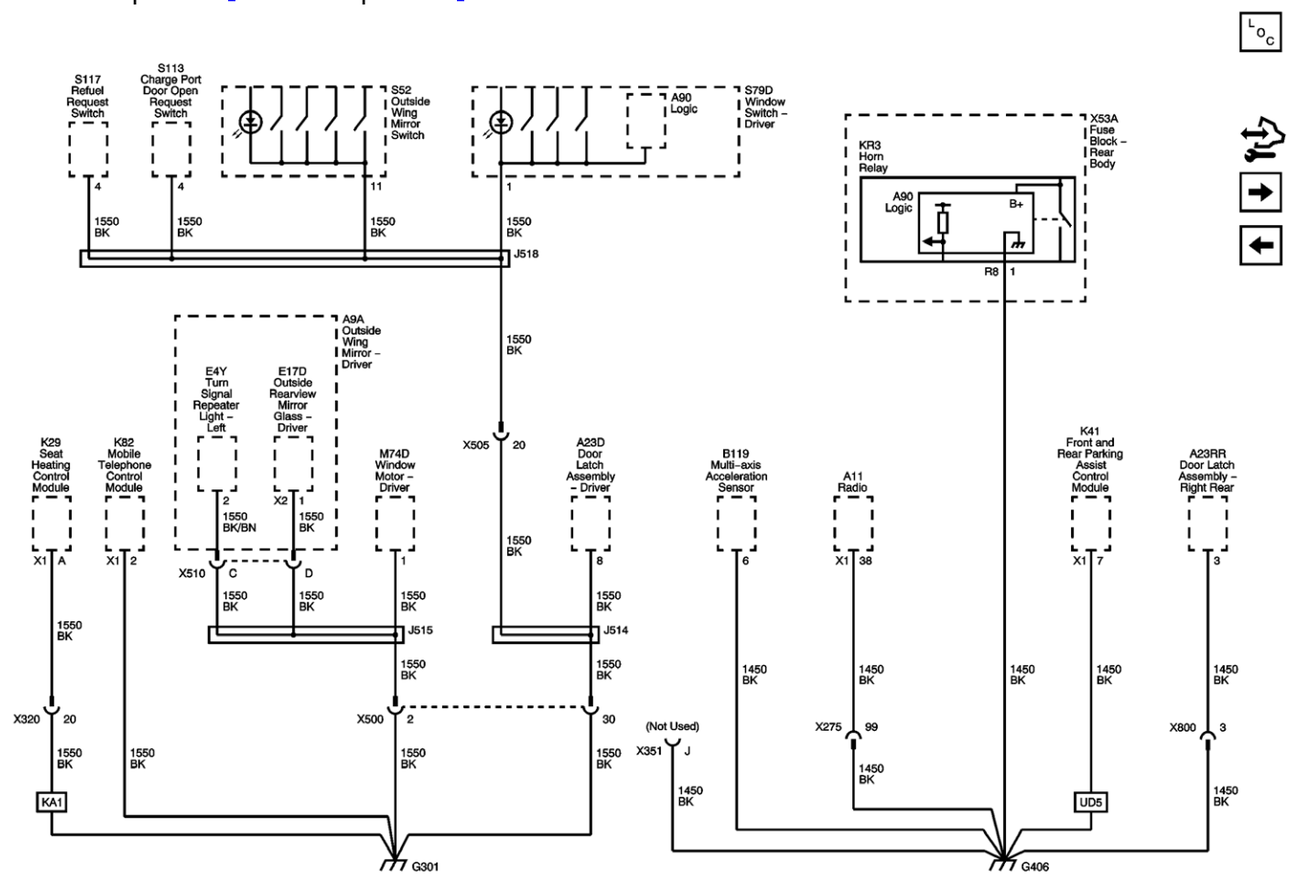

Master Electrical Component List

G302

G204

Horns

© Copyright Chevrolet. All rights reserved

G101 and G102

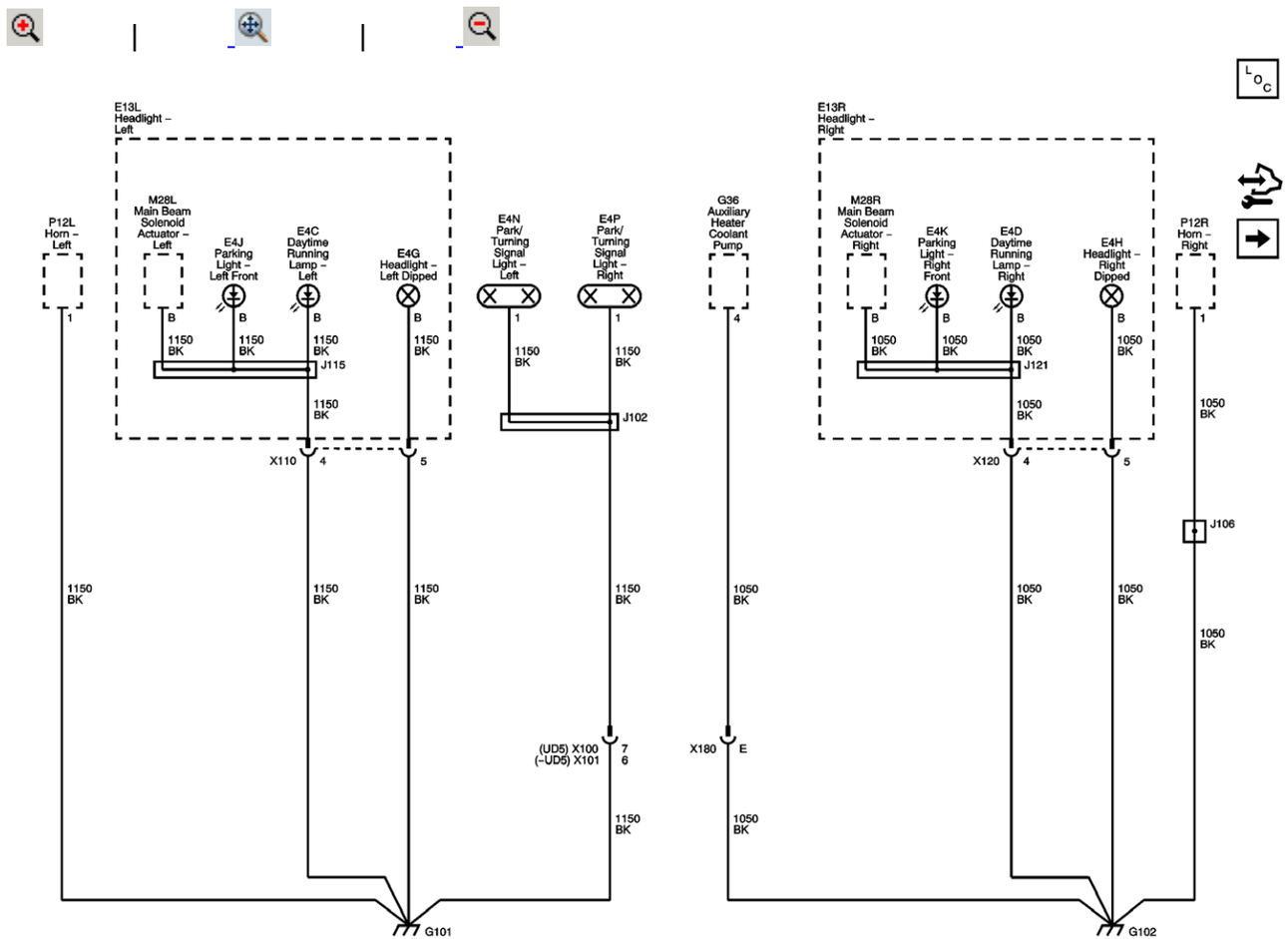

Master Electrical Component List

G103, G104 and G105

© Copyright Chevrolet. All rights reserved

Daytime Running Lamps and Dipped Beams

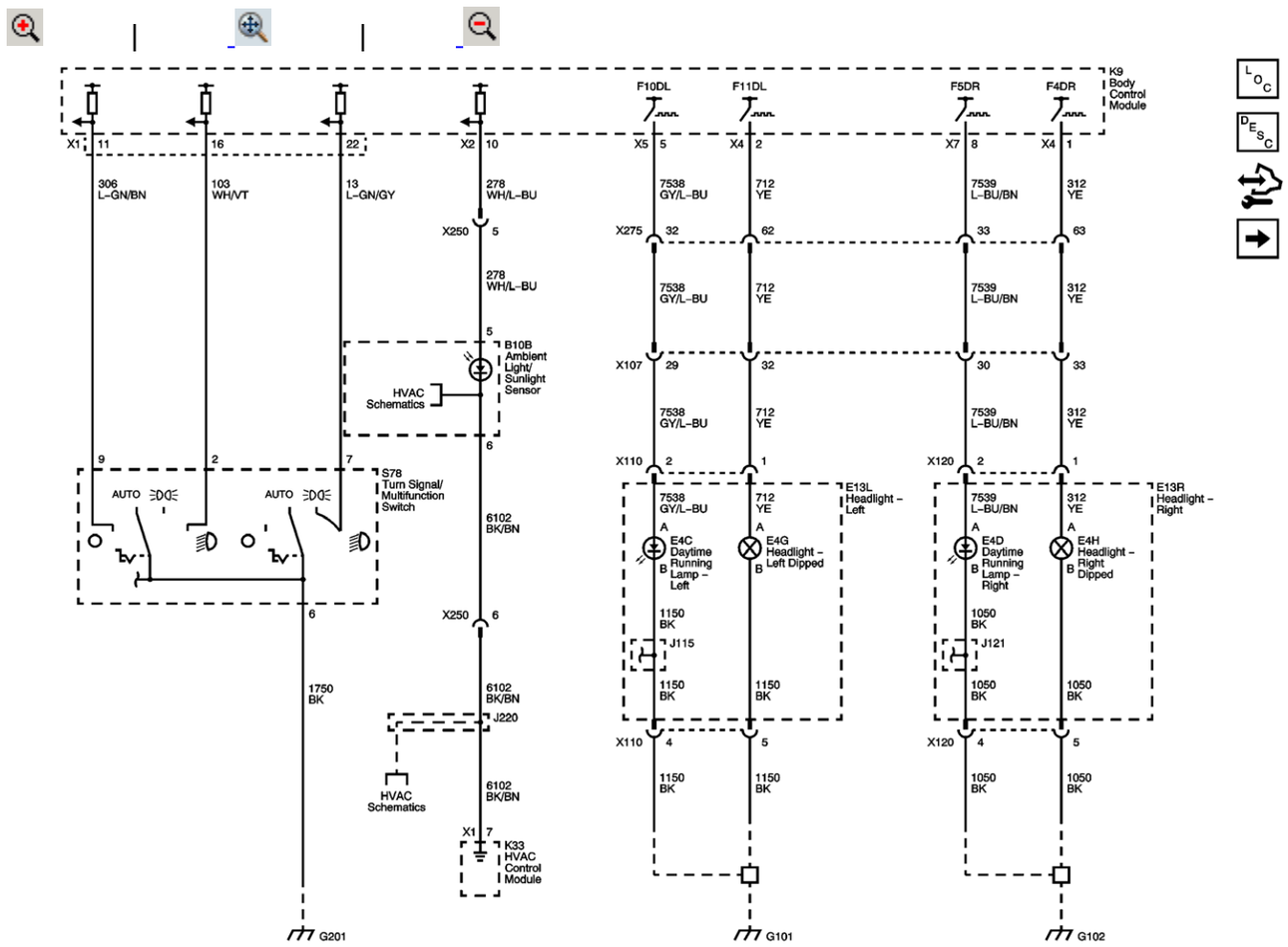

Master Electrical Component List

Main Beam

F1DL, F2DL, F3DL, F4DL, F5DL, F6DL, F7DL, F10DL, F11DL and F15DL Fuses

F4DR, F5DR, F6DR, F7DR, F8DR, F9DR, F10DR, F11DR and F12DR Fuses

Temperature Sensors

G201, G203, G205, G304, G401 and G404

G101 and G102

© Copyright Chevrolet. All rights reserved

Main Beam

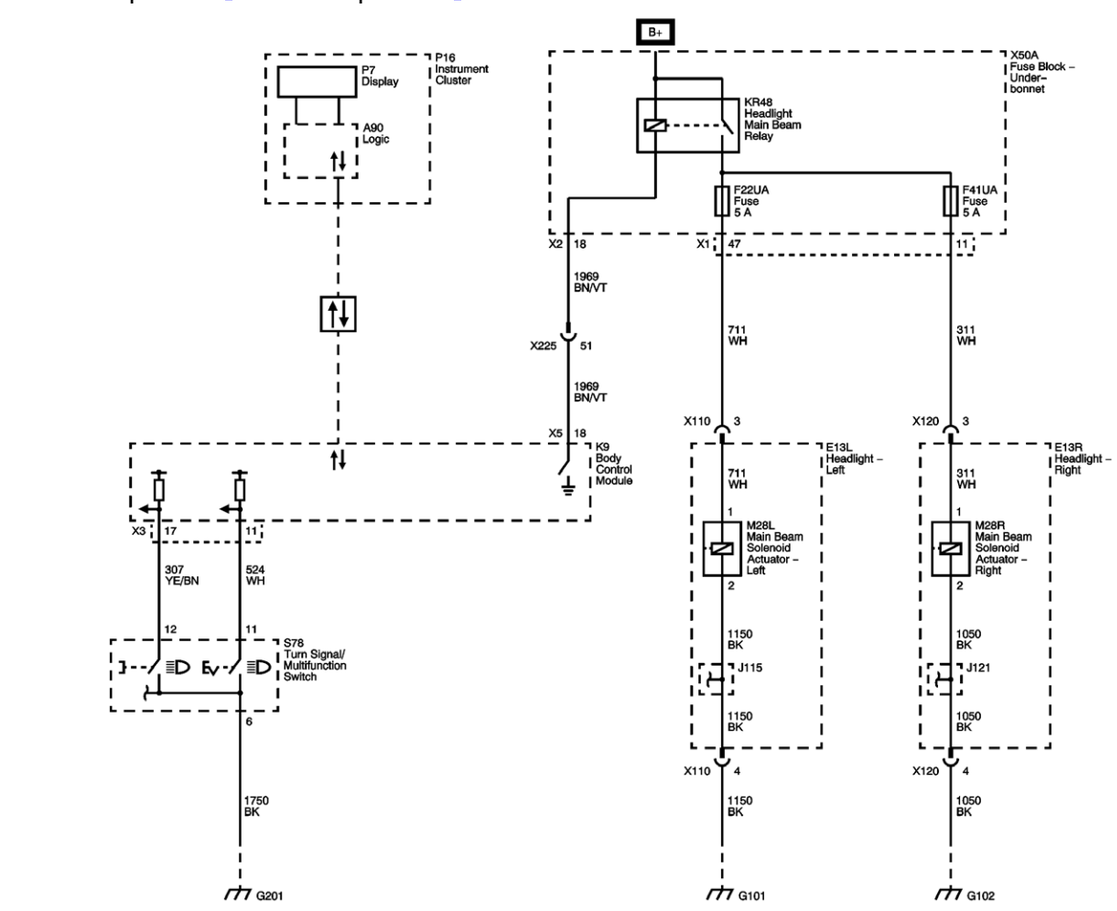
B+
P16 Instrument Cluster
P7 Display
A90 Logic
X50A Fuse Block – Under-bonnet
KR48 Headlight Main Beam Relay
F22UA Fuse 5 A
F41UA Fuse 5 A
X2 18
X1 47
11
1969 BN/VT
X225 51
1969 BN/VT
X5 18
K9 Body Control Module
711 WH
311 WH
X110 3
X120 3
E13L Headlight – Left
E13R Headlight – Right
711 WH
311 WH
1
M28L Main Beam Solenoid Actuator – Left
M28R Main Beam Solenoid Actuator – Right
2
1150 BK
1050 BK
J115
J121
1150 BK
1050 BK
X110 4
X120 4
1150 BK
1050 BK
X3 17
11
307 YE/BN
524 WH
12
11
S78 Turn Signal/ Multifunction Switch
6
1750 BK
G201
G101
G102

Master Electrical Component List

Daytime Running Lamps and Dipped Beams

F6UA, F9UA, F22UA, F23UA, F40UA, F41UA and F43UA Fuses

Data Communication Schematics

G201, G203, G205, G304, G401 and G404

G101 and G102

© Copyright Chevrolet. All rights reserved

Sidelight, Tail, and Number Plate Lamps

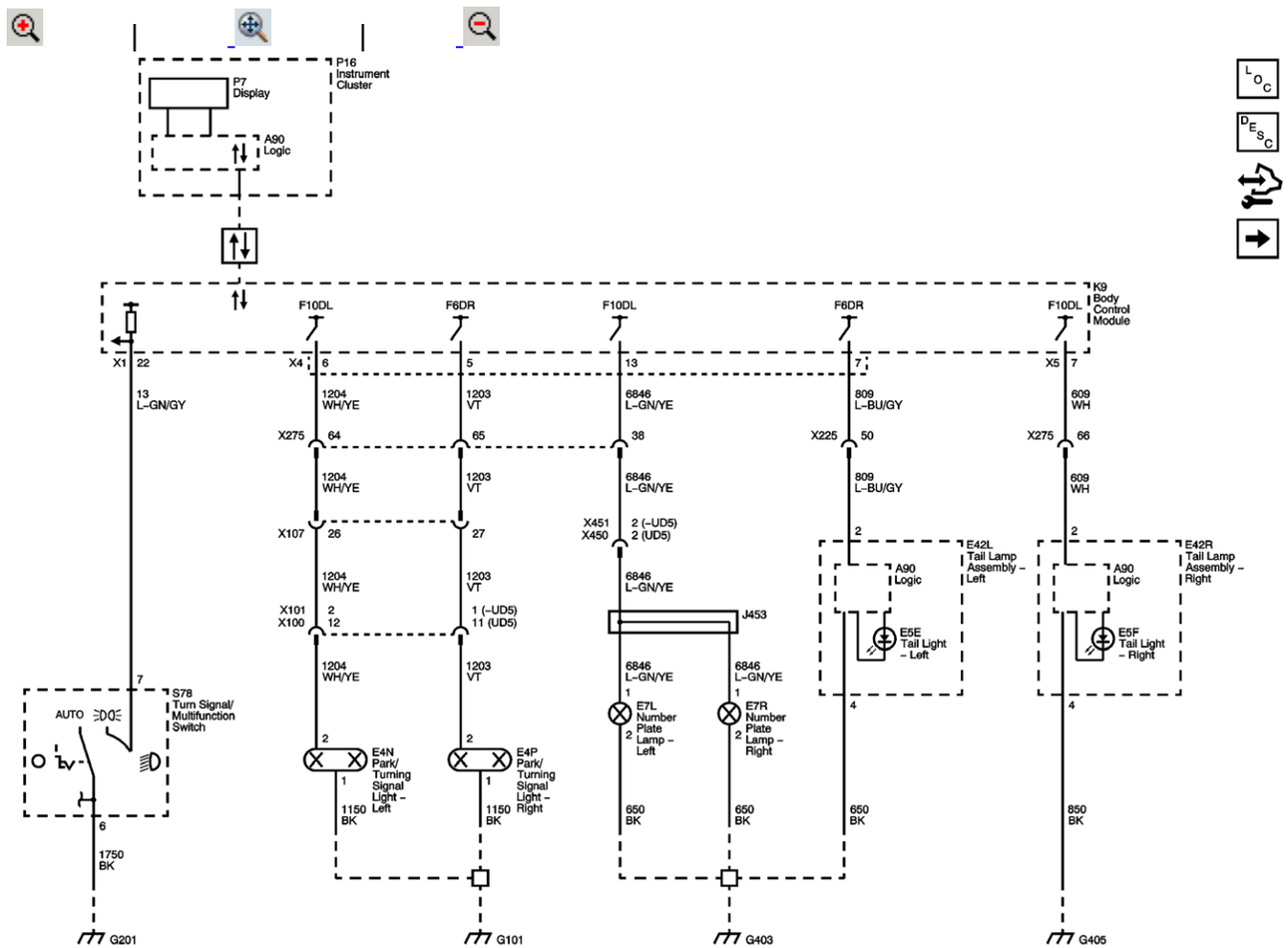

Master Electrical Component List

Front Indicators and Controls

Data Communication Schematics

F1DL, F2DL, F3DL, F4DL, F5DL, F6DL, F7DL, F10DL, F11DL and F15DL Fuses

F4DR, F5DR, F6DR, F7DR, F8DR, F9DR, F10DR, F11DR and F12DR Fuses

F1DL, F2DL, F3DL, F4DL, F5DL, F6DL, F7DL, F10DL, F11DL and F15DL Fuses

F4DR, F5DR, F6DR, F7DR, F8DR, F9DR, F10DR, F11DR and F12DR Fuses

F1DL, F2DL, F3DL, F4DL, F5DL, F6DL, F7DL, F10DL, F11DL and F15DL Fuses

G201, G203, G205, G304, G401 and G404

G101 and G102

G403

G405

© Copyright Chevrolet. All rights reserved

Front Indicators and Controls

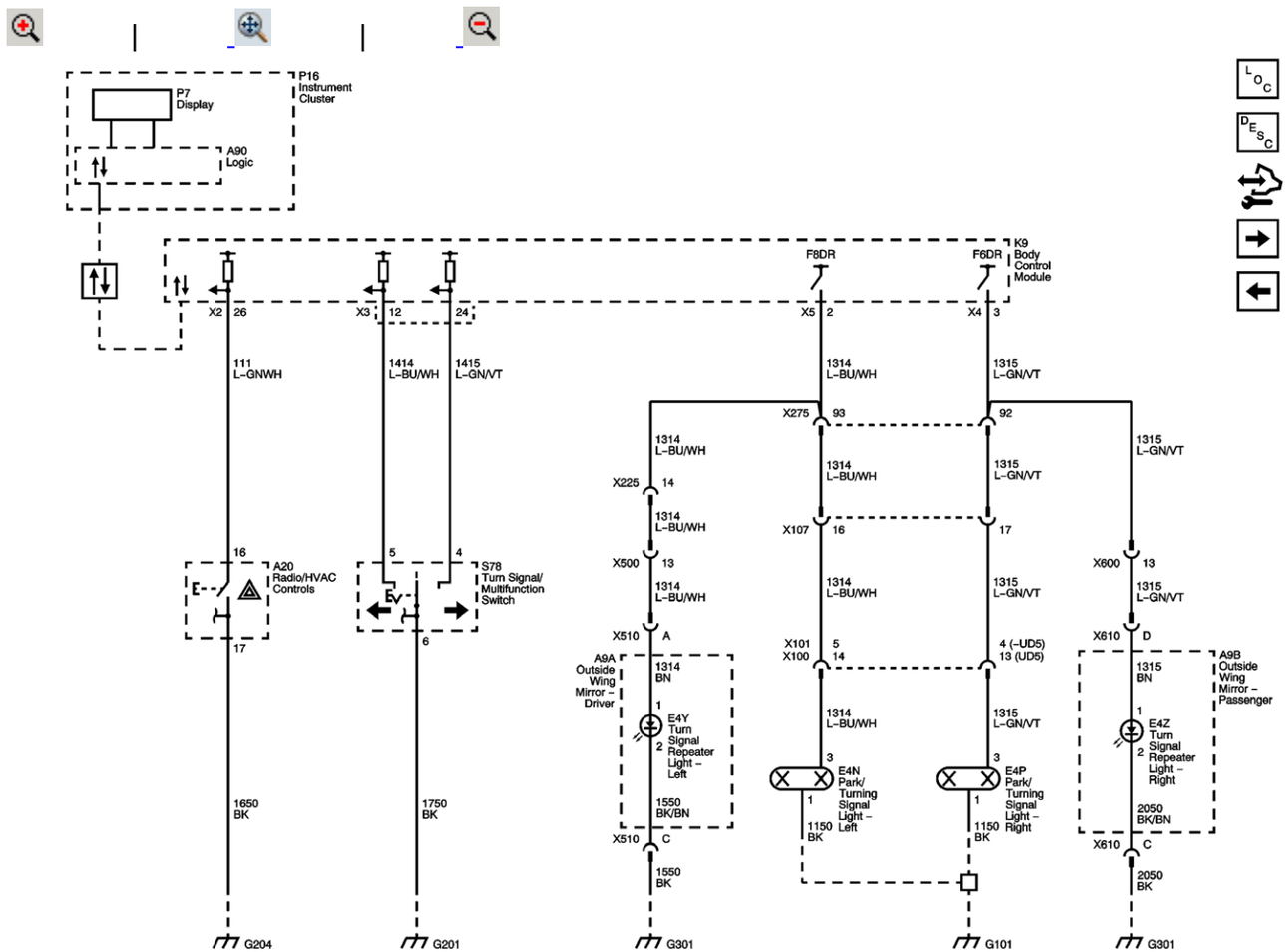

Master Electrical Component List

Rear Indicators, Brake Lamps, Rear Fog Lamp and Reverse Lamp

Sidelight, Tail and Number Plate Lamps

Data Communication Schematics

F4DR, F5DR, F6DR, F7DR, F8DR, F9DR, F10DR, F11DR and F12DR Fuses

G204

G201, G203, G205, G304, G401 and G404

G301 and G406

G101 and G102

G302

© Copyright Chevrolet. All rights reserved

Rear Indicators, Brake Lamps, and Reverse Lamp

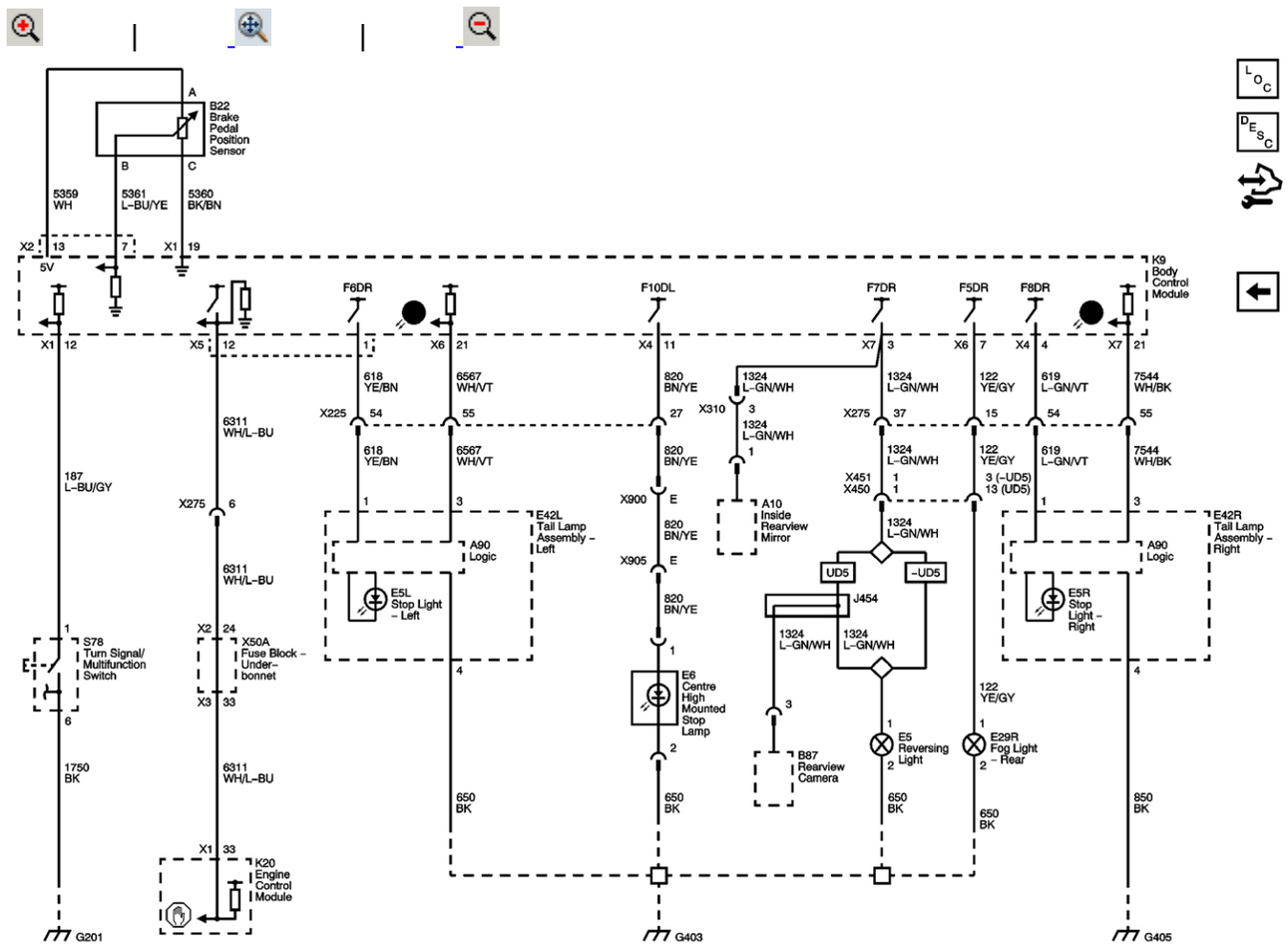

Master Electrical Component List

Front Indicators and Controls

F4DR, F5DR, F6DR, F7DR, F8DR, F9DR, F10DR, F11DR and F12DR Fuses

F1DL, F2DL, F3DL, F4DL, F5DL, F6DL, F7DL, F10DL, F11DL and F15DL Fuses

F4DR, F5DR, F6DR, F7DR, F8DR, F9DR, F10DR, F11DR and F12DR Fuses

G403

G405

© Copyright Chevrolet. All rights reserved

F4DR, F5DR, F6DR, F7DR, F8DR, F9DR, F10DR, F11DR and F12DR Fuses

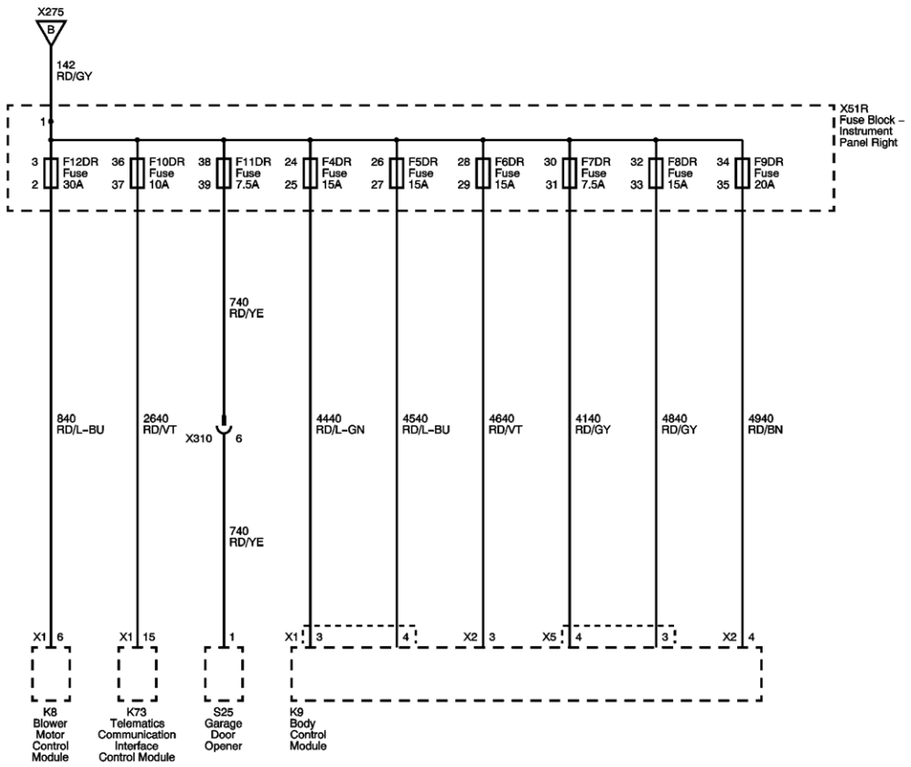

Master Electrical Component List

F2RA, F3RA, F4RA, F5RA, F7RA, F8RA, F10RA, F12RA and F13RA Fuses

F1DL, F2DL, F3DL, F4DL, F5DL, F6DL, F7DL, F10DL, F11DL and F15DL Fuses

X50D Fuse Block - Battery and X50B Fuse Block - Underbonnet Auxiliary Bussing

© Copyright Chevrolet. All rights reserved

G202

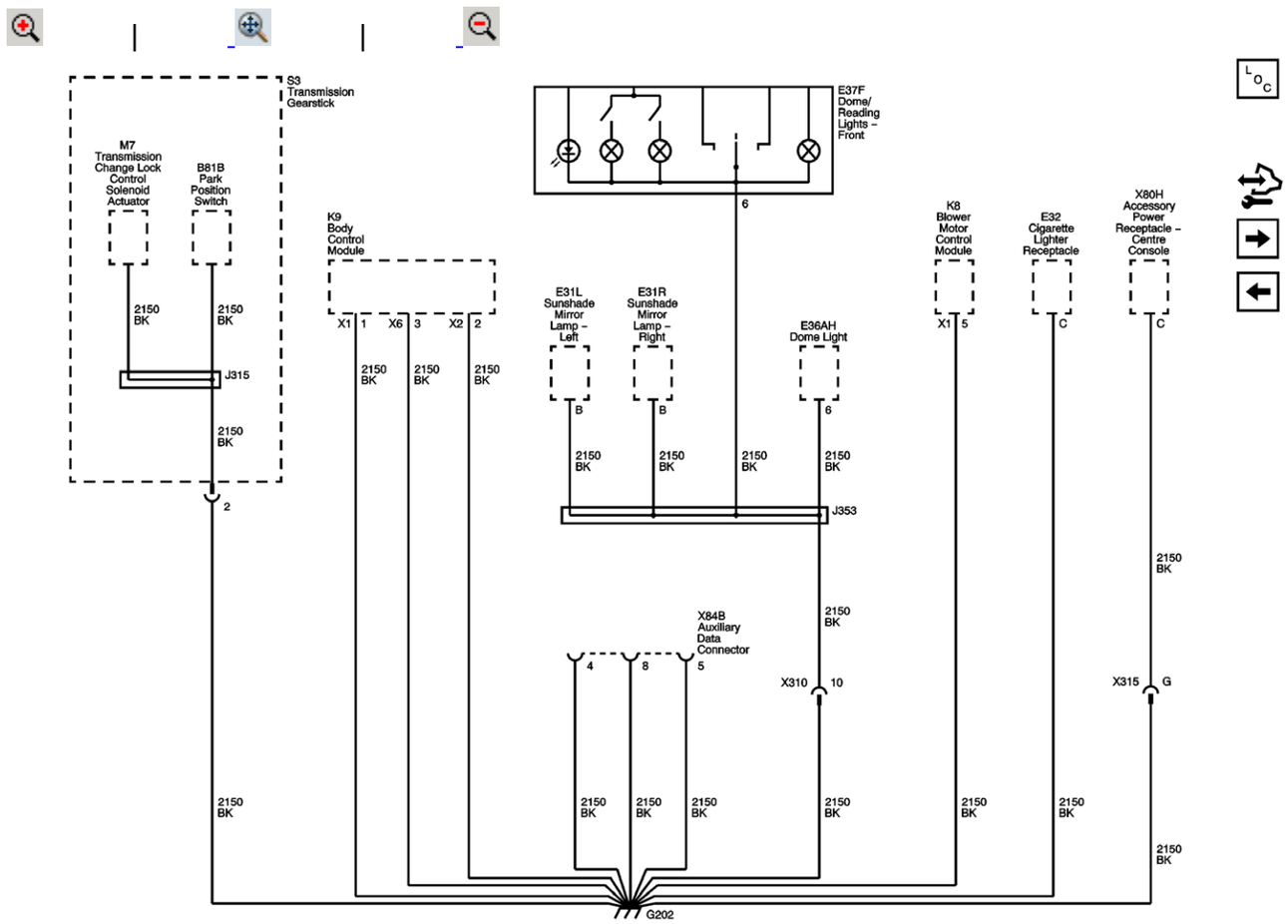
S3
Transmission
Gearstick
M7
Transmission
Change Lock
Control
Solenoid
Actuator
B81B
Park
Position
Switch
2150
BK
J315
2
K9
Body
Control
Module
X1
1
X6
3
X2
2
E37F
Dome/
Reading
Lights –
Front
6
E31L
Sunshade
Mirror
Lamp –
Left
E31R
Sunshade
Mirror
Lamp –
Right
B
E36AH
Dome Light
J353
K8
Blower
Motor
Control
Module
X1
5
E32
Cigarette
Lighter
Receptacle
C
X80H
Accessory
Power
Receptacle –
Centre
Console
X84B
Auxiliary
Data
Connector
4
8
5
X310
10
X315
G
G202

Master Electrical Component List

G204

G201, G203, G205, G304, G401 and G404

© Copyright Chevrolet. All rights reserved

Display Dimming

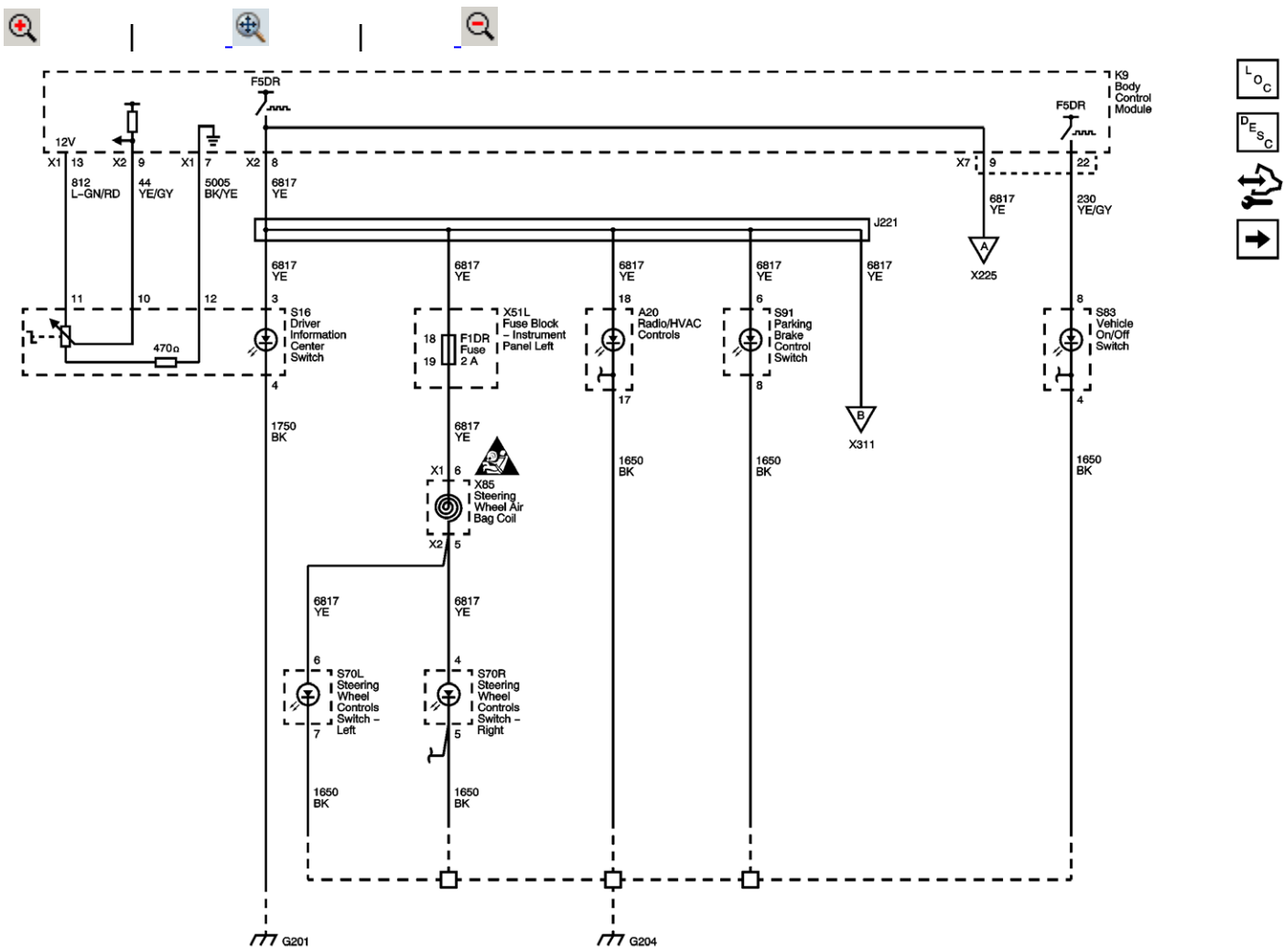

Master Electrical Component List

Controls Dimming

© Copyright Chevrolet. All rights reserved

Controls Dimming

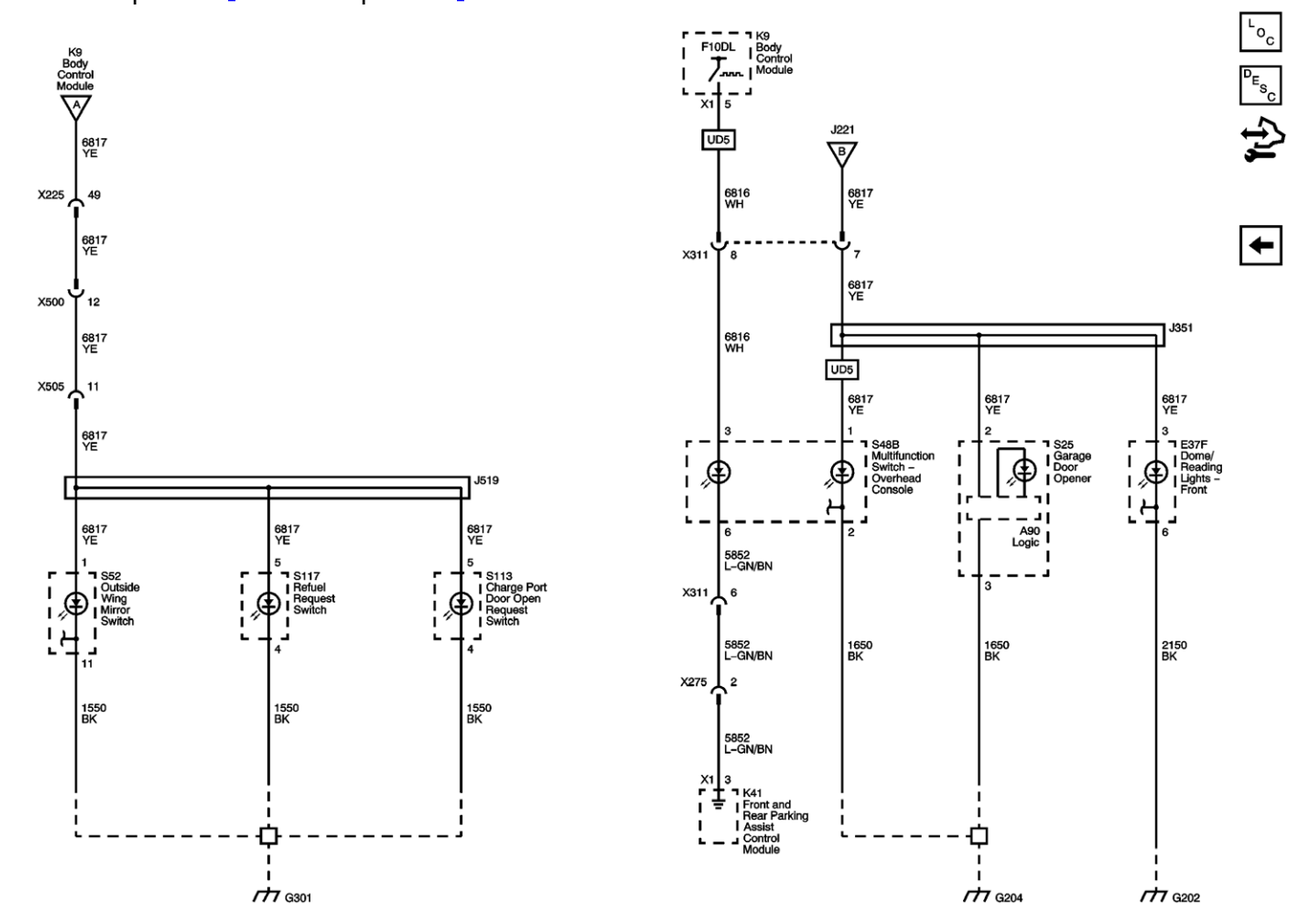

Master Electrical Component List

Display Dimming

F4DR, F5DR, F6DR, F7DR, F8DR, F9DR, F10DR, F11DR and F12DR Fuses

F1DL, F2DL, F3DL, F4DL, F5DL, F6DL, F7DL, F10DL, F11DL and F15DL Fuses

G301 and G406

G403

G204

© Copyright Chevrolet. All rights reserved

Front Indicator Lamp Replacement - Ampera

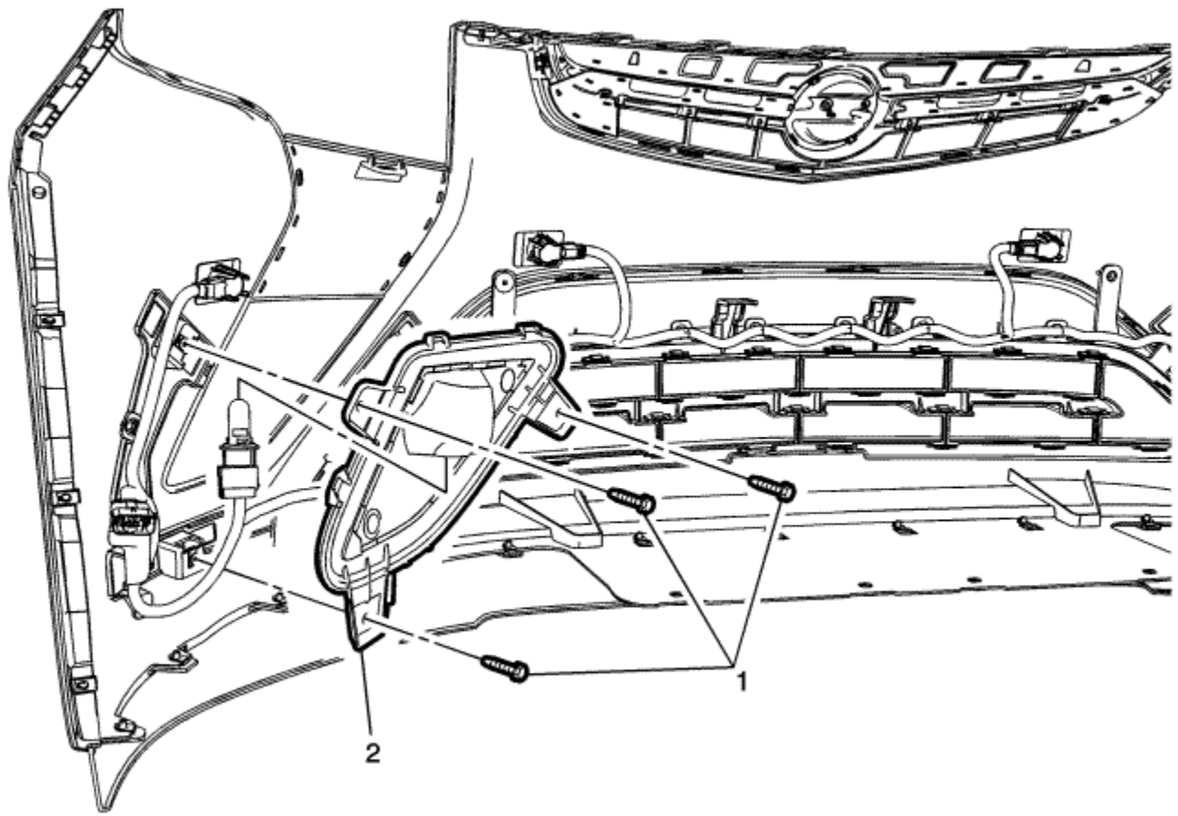

Callout	Component Name
Preliminary Procedures	

1. Remove the front bumper fascia. Refer to Front Bumper Fascia Removal and Installation : Volt → Ampera .
2. Disconnect the forward lamp harness electrical connector from the front indicator lamp socket.
3. Transfer the bulb and bulb socket as needed, rotate counter-clockwise in order to remove.

1	Indicator Lamp Screw (Qty: 3) **Caution:** Refer to Fastener Caution in the Preface section. **Tighten** 2.5 N·m (22 lb in)
2	Indicator Lamp Assembly **Warning:** Refer to Halogen Bulb Warning in the Preface section.

© Copyright Chevrolet. All rights reserved

F32UA, F33UA, F50UA, F51UA, F52UA, F53UA and F54UA Fuses

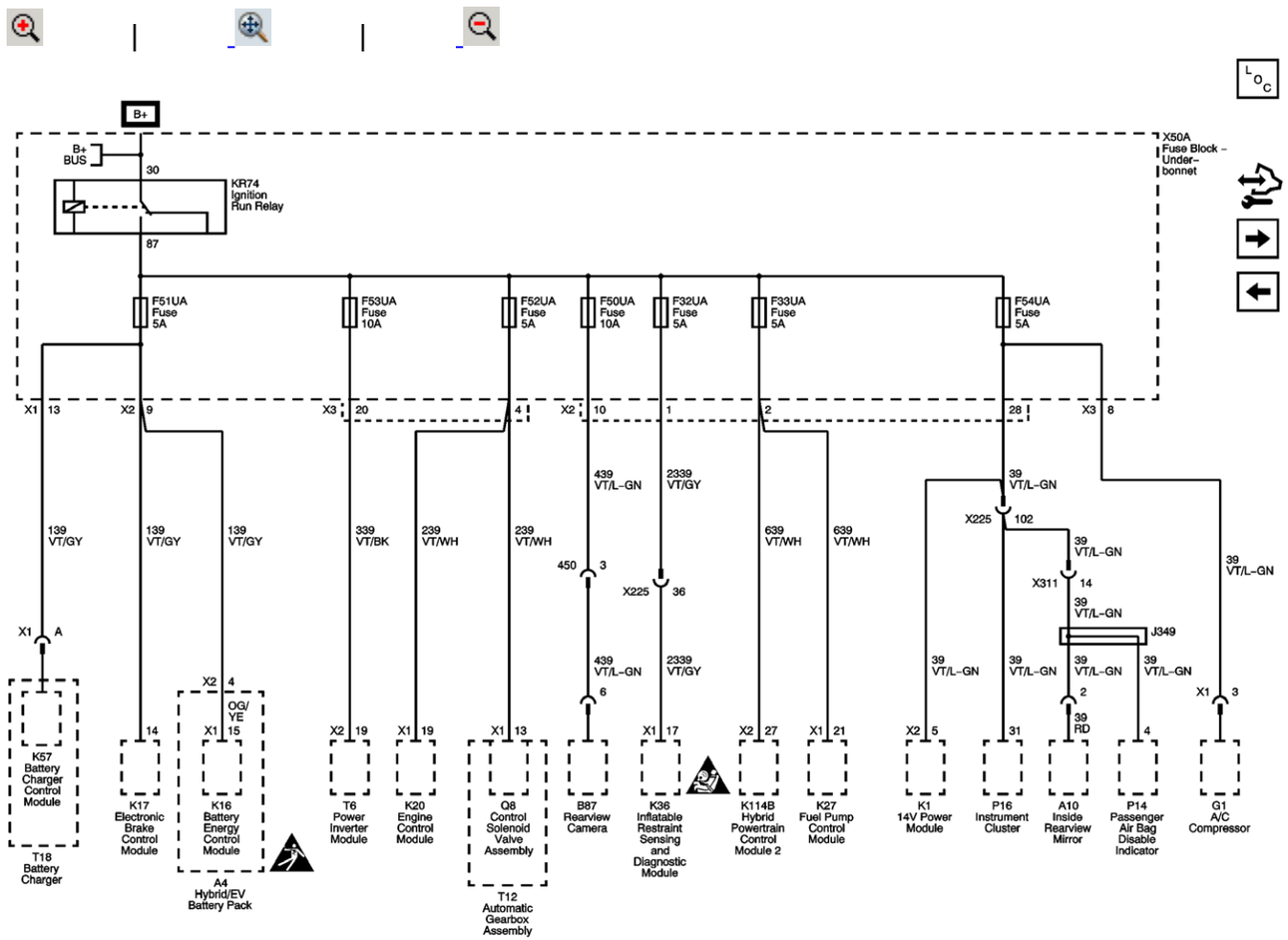

Master Electrical Component List

F1UA, F2UA, F3UA, F4UA, F21UA, F30UA and F34UA Fuses

X50A Fuse Block - Underbonnet Bussing

Master Electrical Schematic Icons

© Copyright Chevrolet. All rights reserved

Directional Controls and Motors

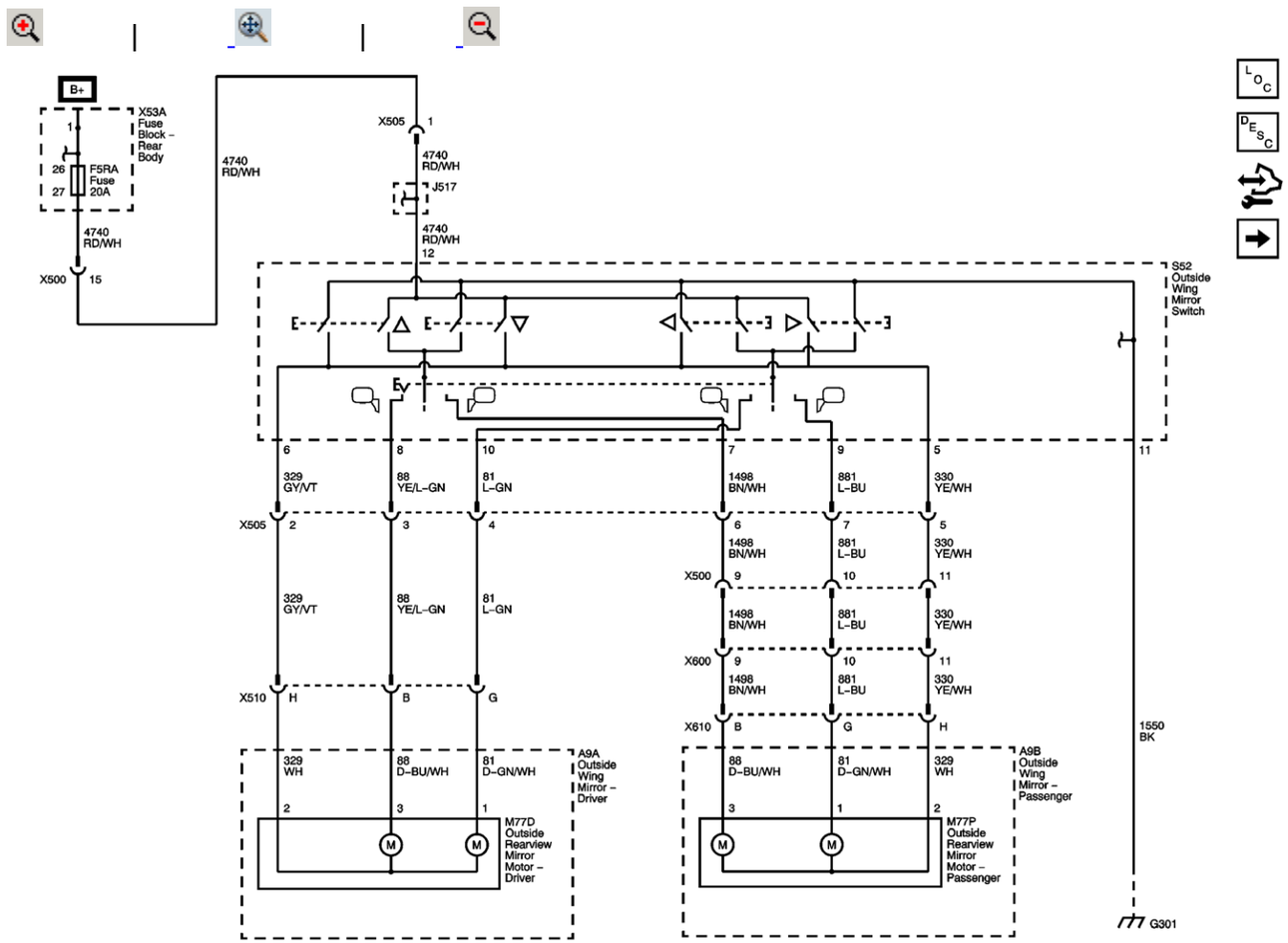

Master Electrical Component List

Outside Mirror Description and Operation

Mirror Heaters

F2RA, F3RA, F4RA, F5RA, F7RA, F8RA, F10RA, F12RA and F13RA Fuses

G301 and G406

© Copyright Chevrolet. All rights reserved

Mirror Heaters

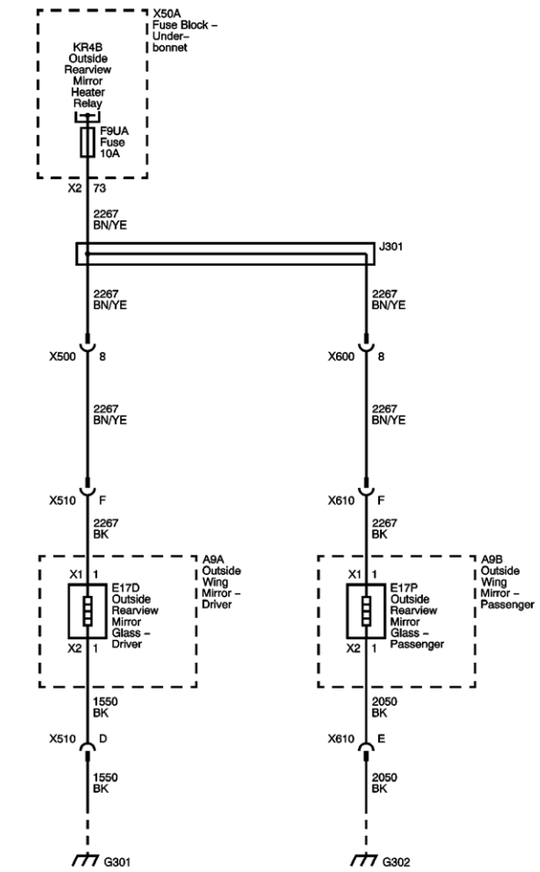

Master Electrical Component List

Outside Mirror Description and Operation

Directional Controls and Motors

Demister

F6UA, F9UA, F22UA, F23UA, F40UA, F41UA and F43UA Fuses

G301 and G406

G302

© Copyright Chevrolet. All rights reserved

Door Locks

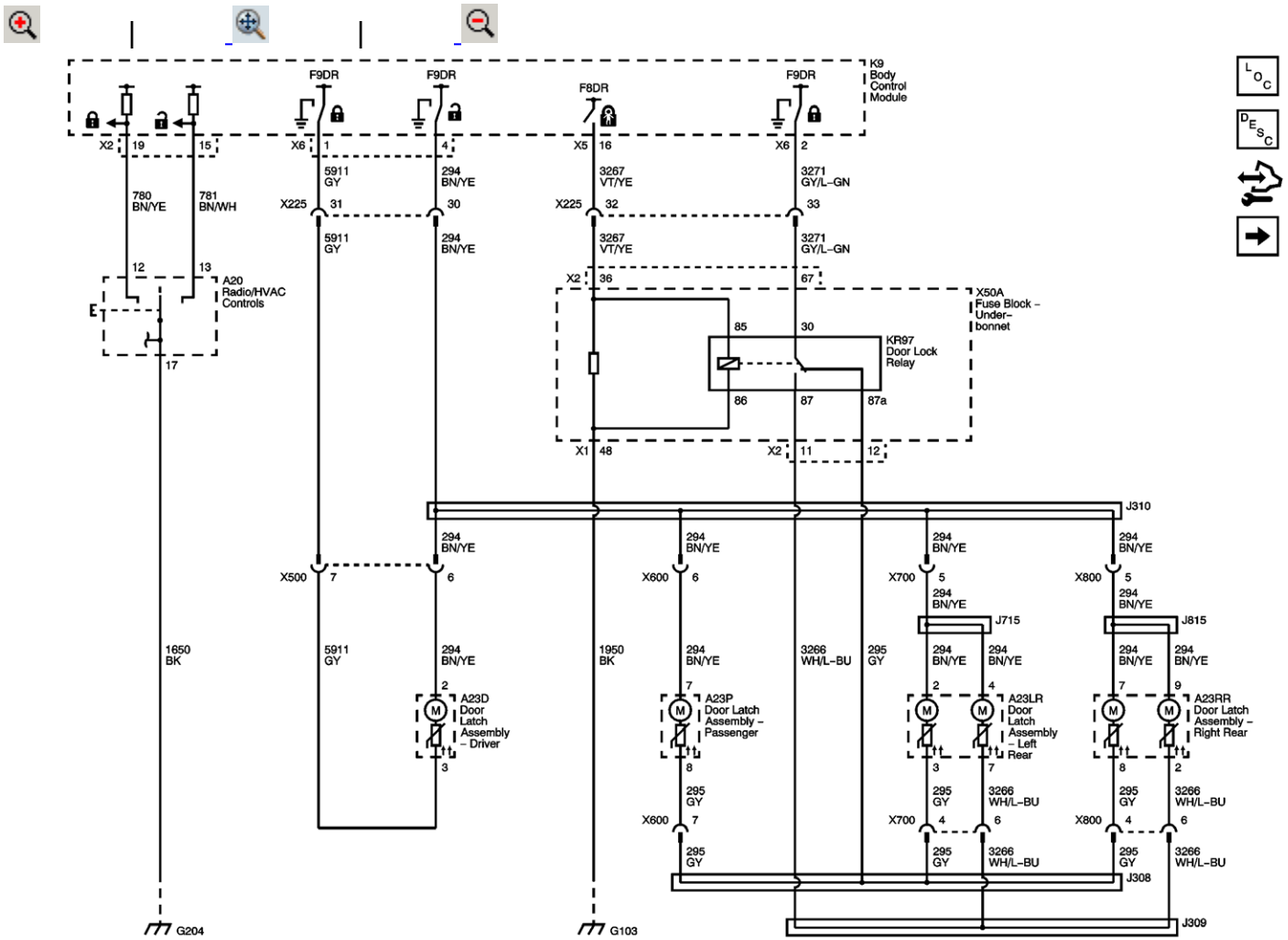
K9
Body
Control
Module
F9DR
F9DR
F8DR
F9DR
X2
19
15
X6
1
4
X5
16
X6
2
5911
GY
294
BN/YE
3267
VT/YE
3271
GY/L-GN
780
BN/YE
781
BN/WH
X225
31
30
X225
32
33
5911
GY
294
BN/YE
3267
VT/YE
3271
GY/L-GN
12
13
X2
36
67
A20
Radio/HVAC
Controls
E
17
X50A
Fuse Block -
Under-
bonnet
85
30
KR97
Door Lock
Relay
86
87
87a
X1
48
X2
11
12
J310
294
BN/YE
X500
7
6
X600
6
X700
5
X800
5
294
BN/YE
J715
J815
1650
BK
5911
GY
294
BN/YE
1950
BK
294
BN/YE
3266
WH/L-BU
295
GY
294
BN/YE
294
BN/YE
294
BN/YE
294
BN/YE
2
7
2
4
7
9
A23D
Door
Latch
Assembly
- Driver
A23P
Door Latch
Assembly -
Passenger
A23LR
Door
Latch
Assembly
- Left
Rear
A23RR
Door Latch
Assembly -
Right Rear
3
8
3
7
8
2
295
GY
3266
WH/L-BU
X600
7
X700
4
6
X800
4
6
295
GY
3266
WH/L-BU
J308
J309
G204
G103

Master Electrical Component List

Power Door Locks Description and Operation

Door Handle Switches

F4DR, F5DR, F6DR, F7DR, F8DR, F9DR, F10DR, F11DR and F12DR Fuses

G204

G103, G104 and G105

© Copyright Chevrolet. All rights reserved

Door Handle Switches

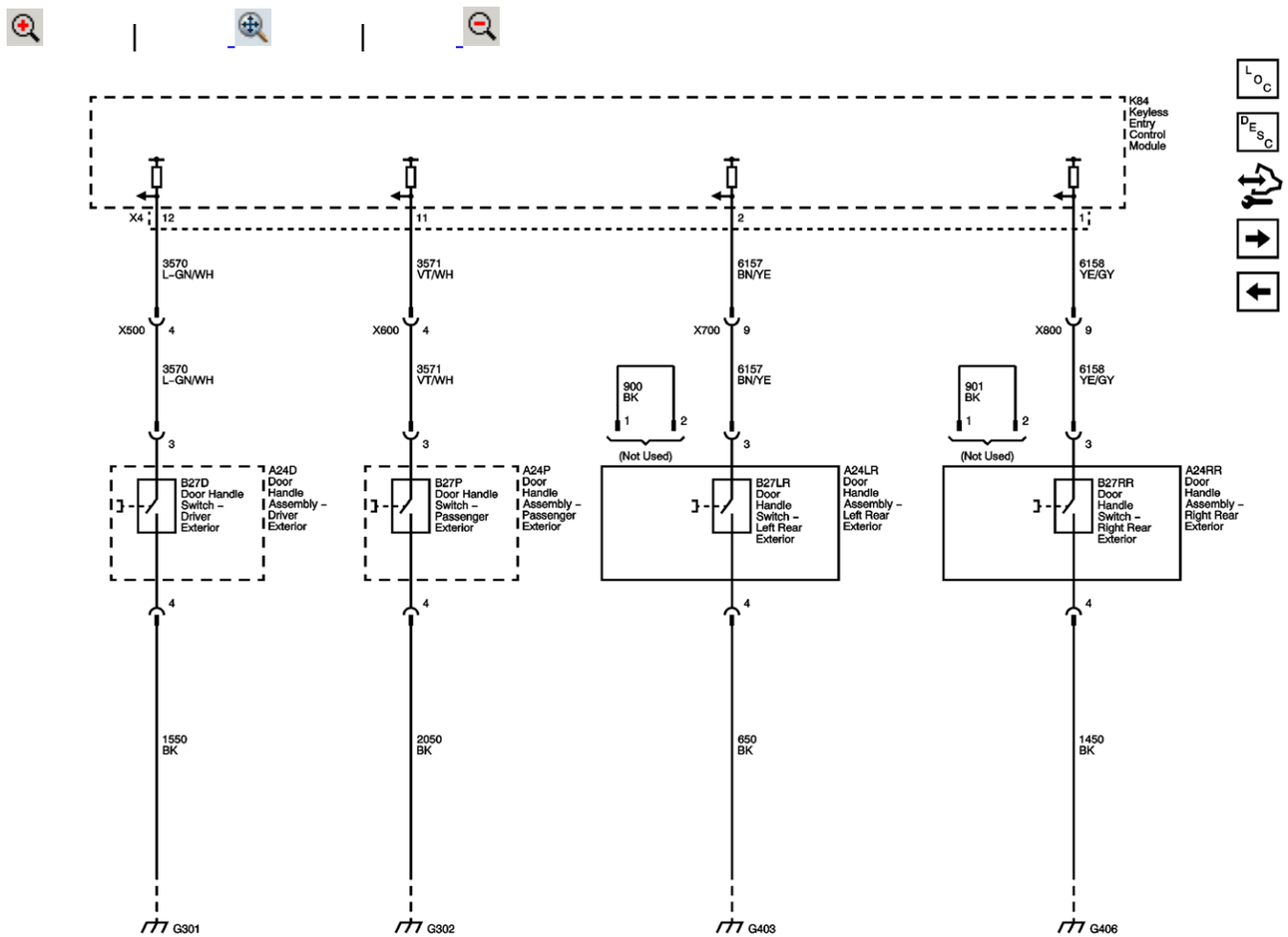

Master Electrical Component List

Power Door Locks Description and Operation

Door Ajar Switches

Door Locks

© Copyright Chevrolet. All rights reserved

Door Ajar Switches

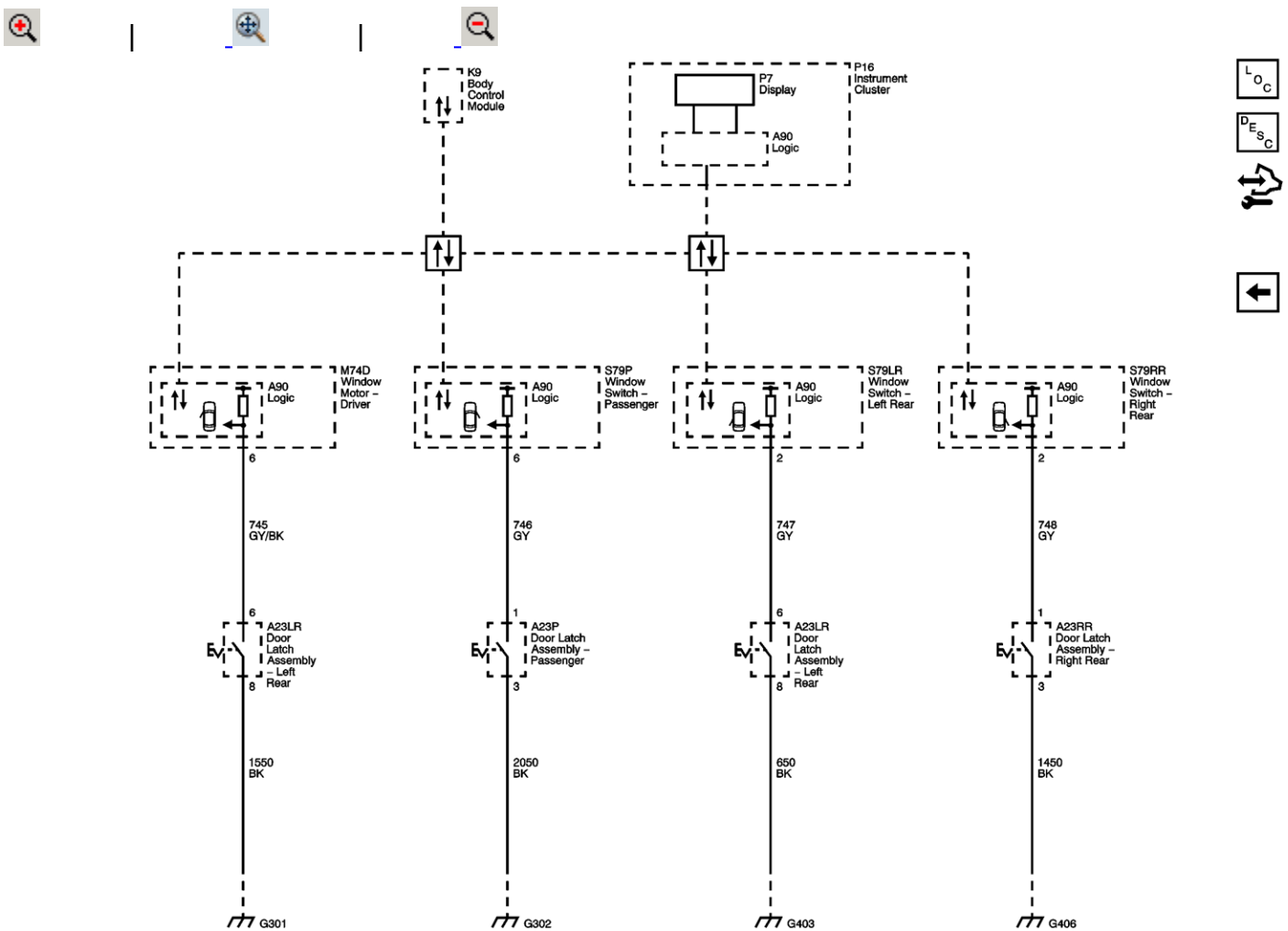

Master Electrical Component List

Door Ajar Indicator Description and Operation

Door Handle Switches

Data Communication Schematics

G301 and G406

G302

G403

G301 and G406

© Copyright Chevrolet. All rights reserved

F2RA, F3RA, F4RA, F5RA, F7RA, F8RA, F10RA, F12RA and F13RA Fuses

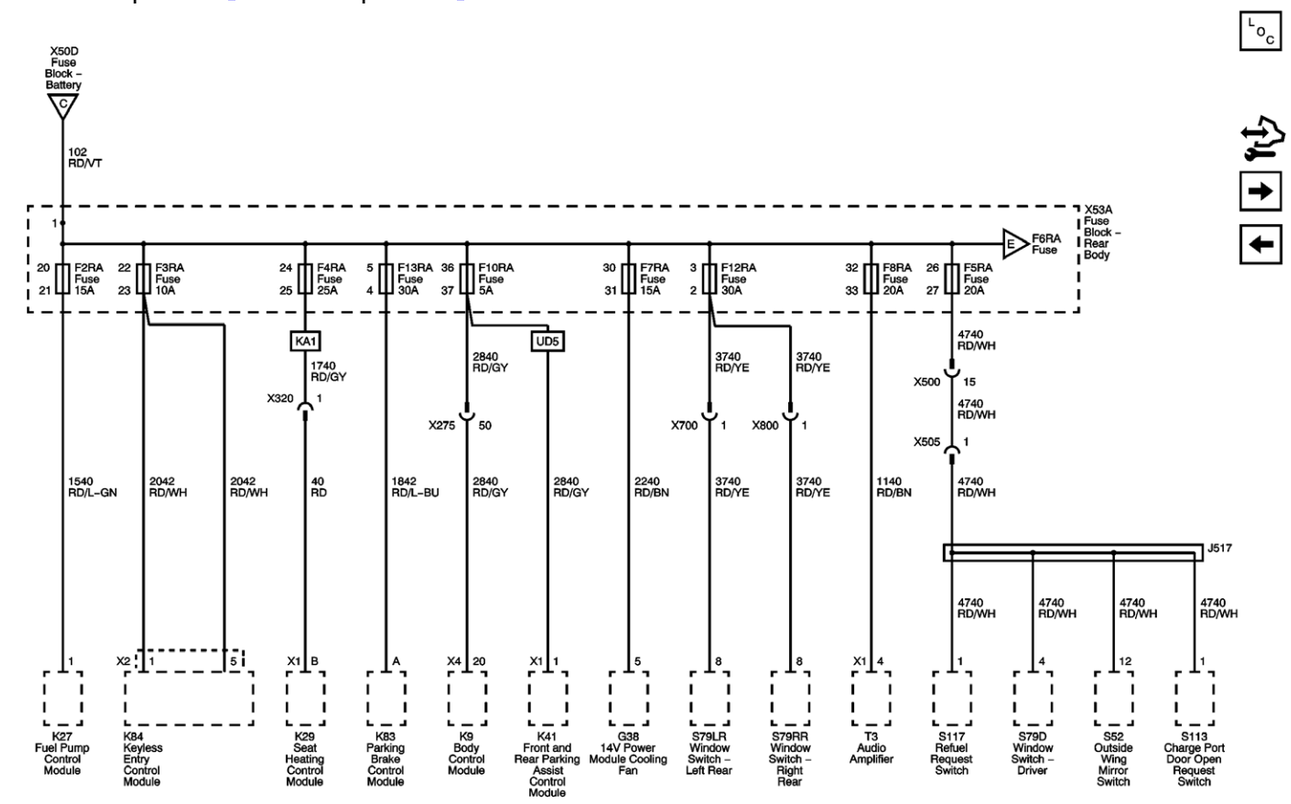

Master Electrical Component List

F6RA, F11RA, F14RA and F16RA Fuses

F4DR, F5DR, F6DR, F7DR, F8DR, F9DR, F10DR, F11DR and F12DR Fuses

X50D Fuse Block - Battery and X50B Fuse Block - Underbonnet Auxiliary Bussing

F6RA, F11RA, F14RA and F16RA Fuses

© Copyright Chevrolet. All rights reserved

G405

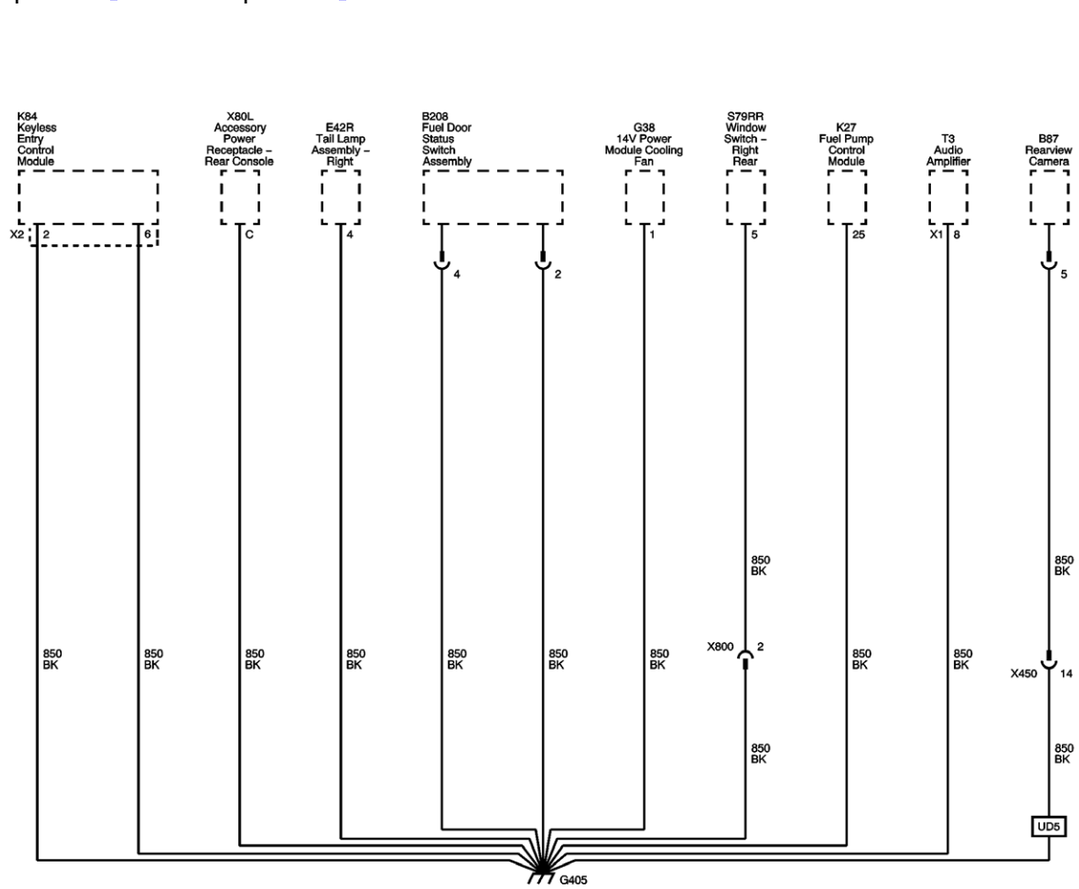
K84
Keyless
Entry
Control
Module
X80L
Accessory
Power
Receptacle –
Rear Console
E42R
Tail Lamp
Assembly –
Right
B208
Fuel Door
Status
Switch
Assembly
G38
14V Power
Module Cooling
Fan
S79RR
Window
Switch –
Right
Rear
K27
Fuel Pump
Control
Module
T3
Audio
Amplifier
B87
Rearview
Camera
X2
2
6
C
4
4
2
1
5
25
X1
8
5
850
BK
X800
2
X450
14
UD5
G405

Master Electrical Component List

G403

© Copyright Chevrolet. All rights reserved

F1DL, F2DL, F3DL, F4DL, F5DL, F6DL, F7DL, F10DL, F11DL and F15DL Fuses

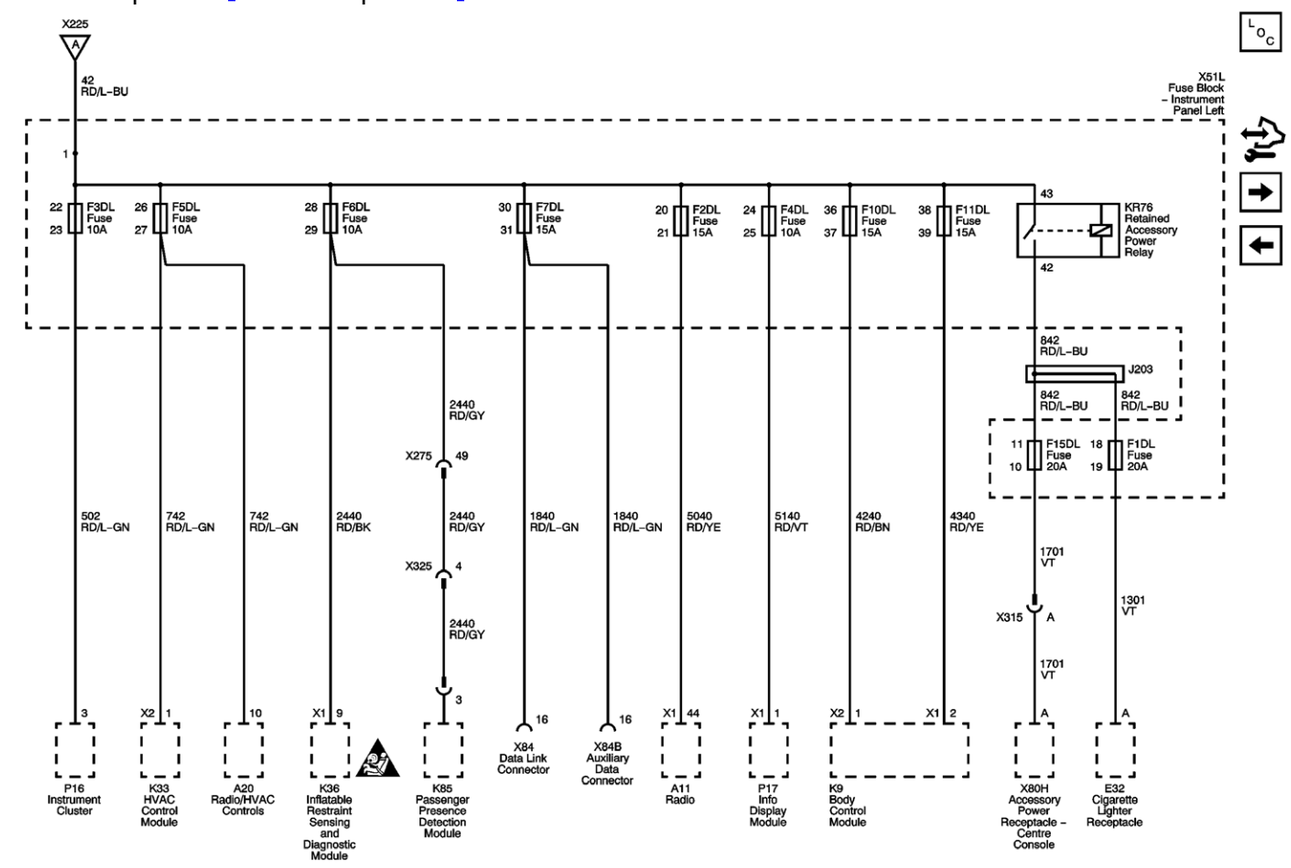

Master Electrical Component List

F4DR, F5DR, F6DR, F7DR, F8DR, F9DR, F10DR, F11DR and F12DR Fuses

F31UA, F35UA, F37UA, F42UA, F44UA and F48UA Fuses

X50D Fuse Block - Battery and X50B Fuse Block - Underbonnet Auxiliary Bussing

Cigarette Lighter/Power Outlets

Master Electrical Schematic Icons

© Copyright Chevrolet. All rights reserved

Bonnet Insulator Replacement - Ampera

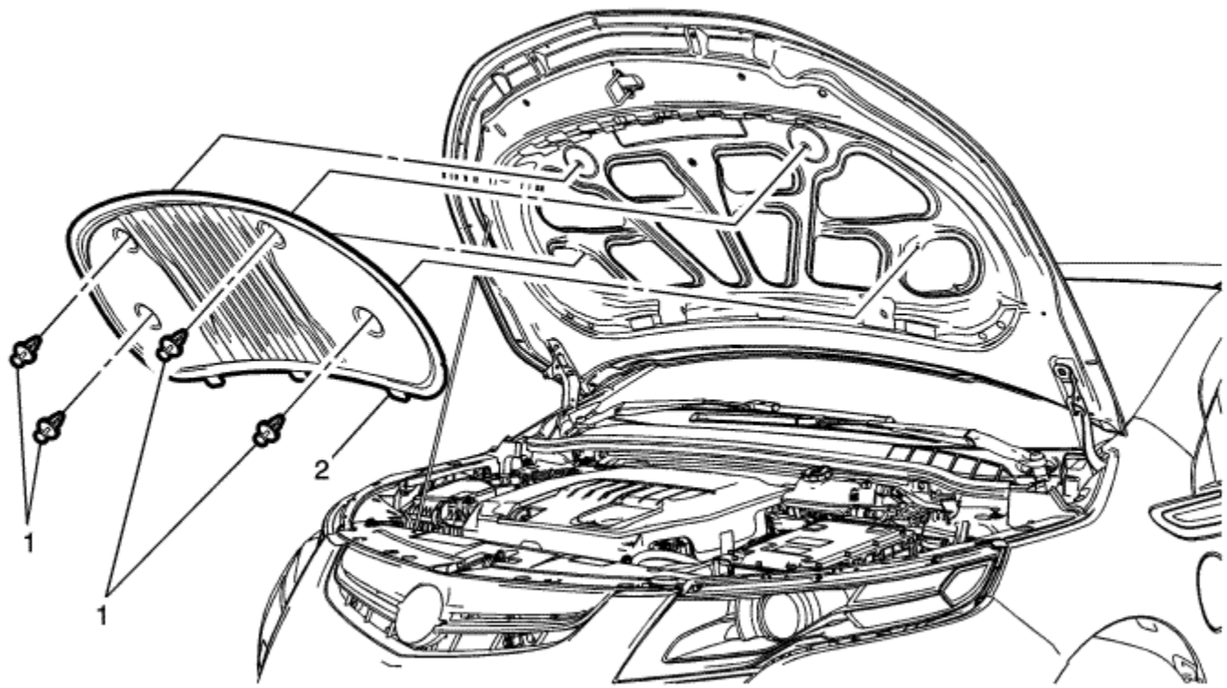

Callout	Component Name
1	Hood Insulator Plastic Retainer (Qty: 4)
2	Bonnet Insulator **Procedure**

	Ensure the 3 integral tabs are secured to the bonnet.

© Copyright Chevrolet. All rights reserved

Bonnet Rear Weatherstrip Replacement - Ampera

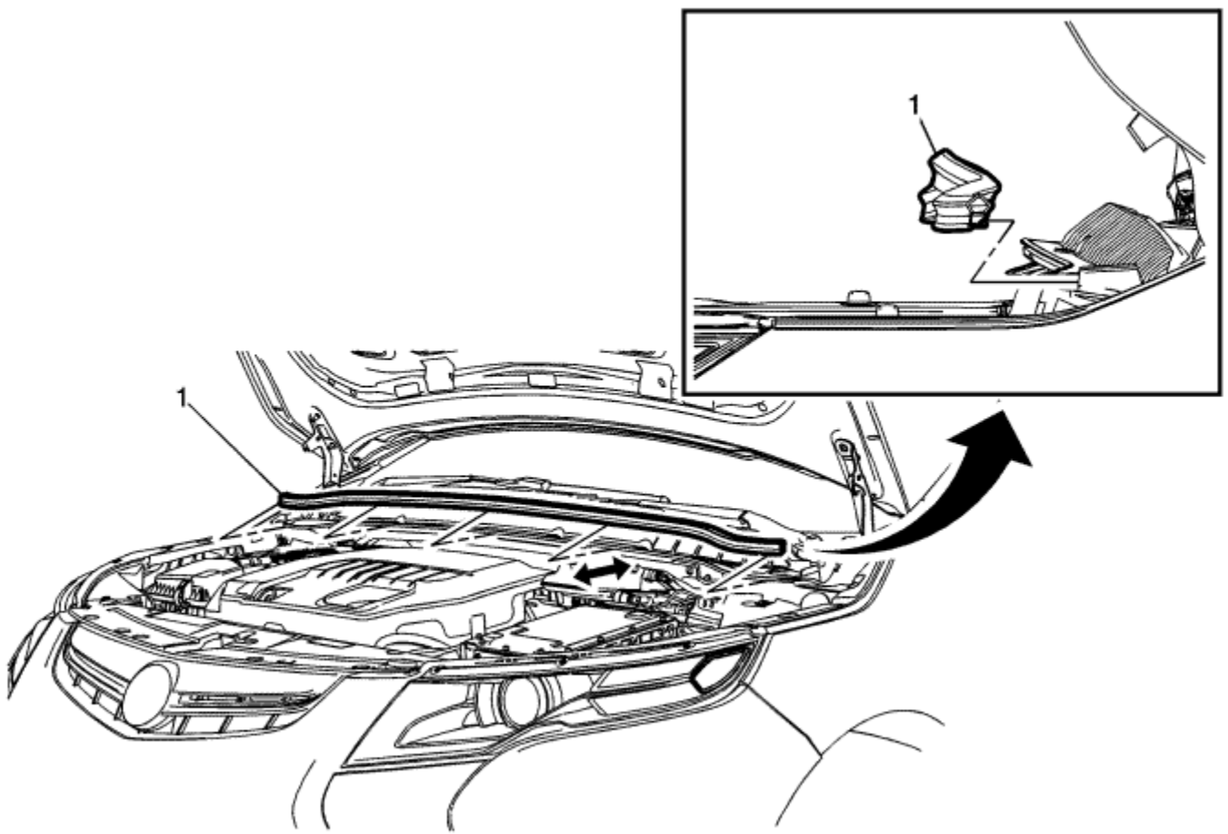

Callout	Component Name
1	Bonnet Rear Weatherstrip **Procedure** Clean the area where the weatherstrip will be mounted. Use a suitable solvent with a mixture of 50 percent isopropyl alcohol and 50 percent water by volume, or high

	flash naphtha.

© Copyright Chevrolet. All rights reserved

Power, Ground, Serial Data, and Brake Pedal Control

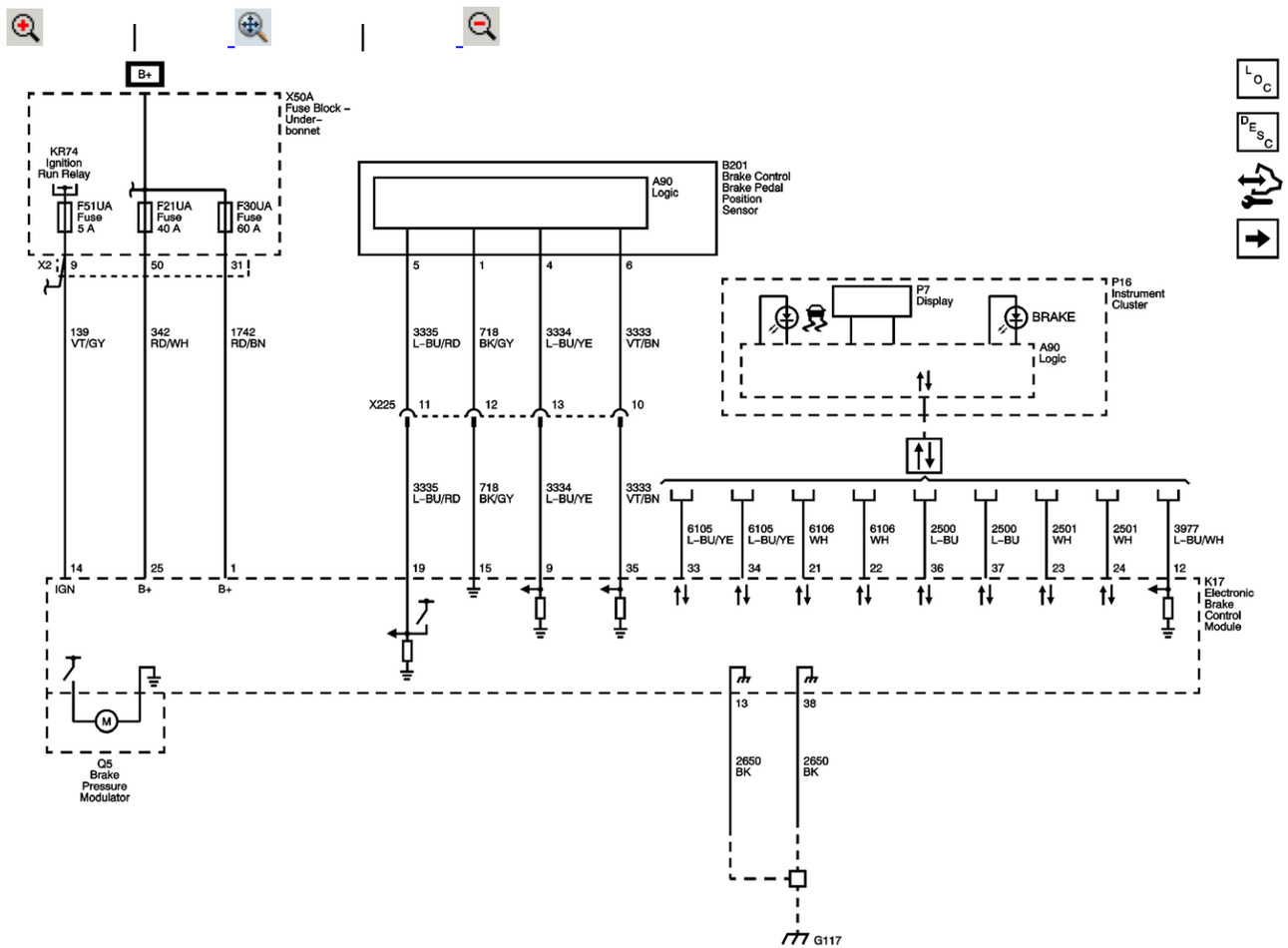

Master Electrical Component List

Wheel Speed Signals

F32UA, F33UA, F50UA, F51UA, F52UA, F53UA and F54UA Fuses

F1UA, F2UA, F3UA, F4UA, F21UA, F30UA and F34UA Fuses

Data Communication Schematics

G106, G109, G110, G112, G113 and G117

© Copyright Chevrolet. All rights reserved

Wheel Speed Signals

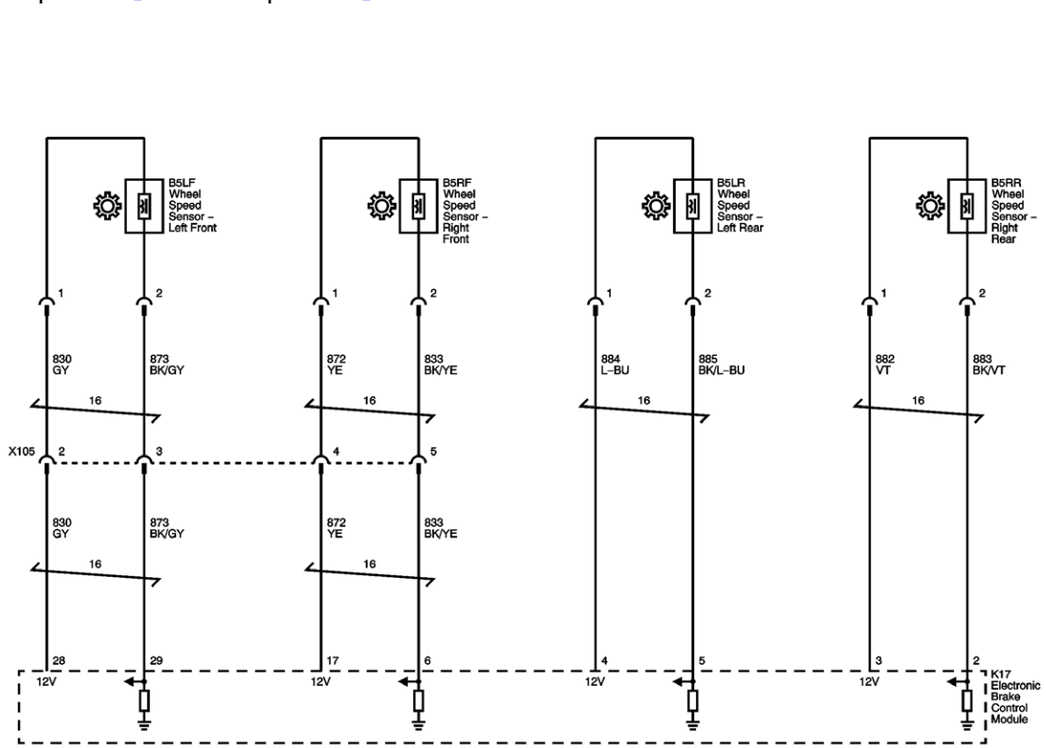

Master Electrical Component List

Vehicle Stability

Power, Ground, Data Communication and Brake Pedal Control

Master Electrical Schematic Icons

© Copyright Chevrolet. All rights reserved

Vehicle Stability

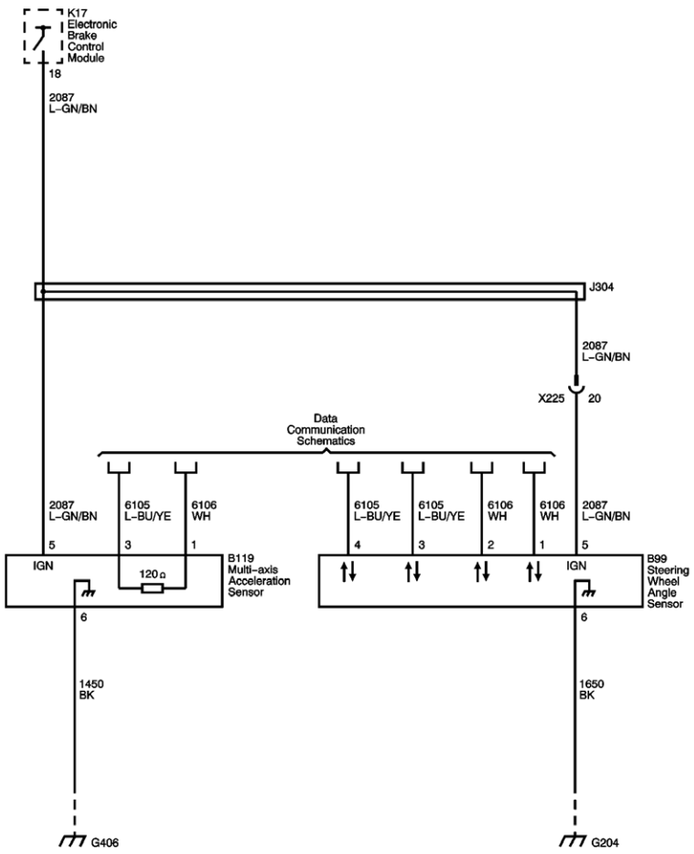

Master Electrical Component List

Wheel Speed Signals

Data Communication Schematics

G301 and G406

G204

© Copyright Chevrolet. All rights reserved

G106, G109, G110, G112, G113 and G117

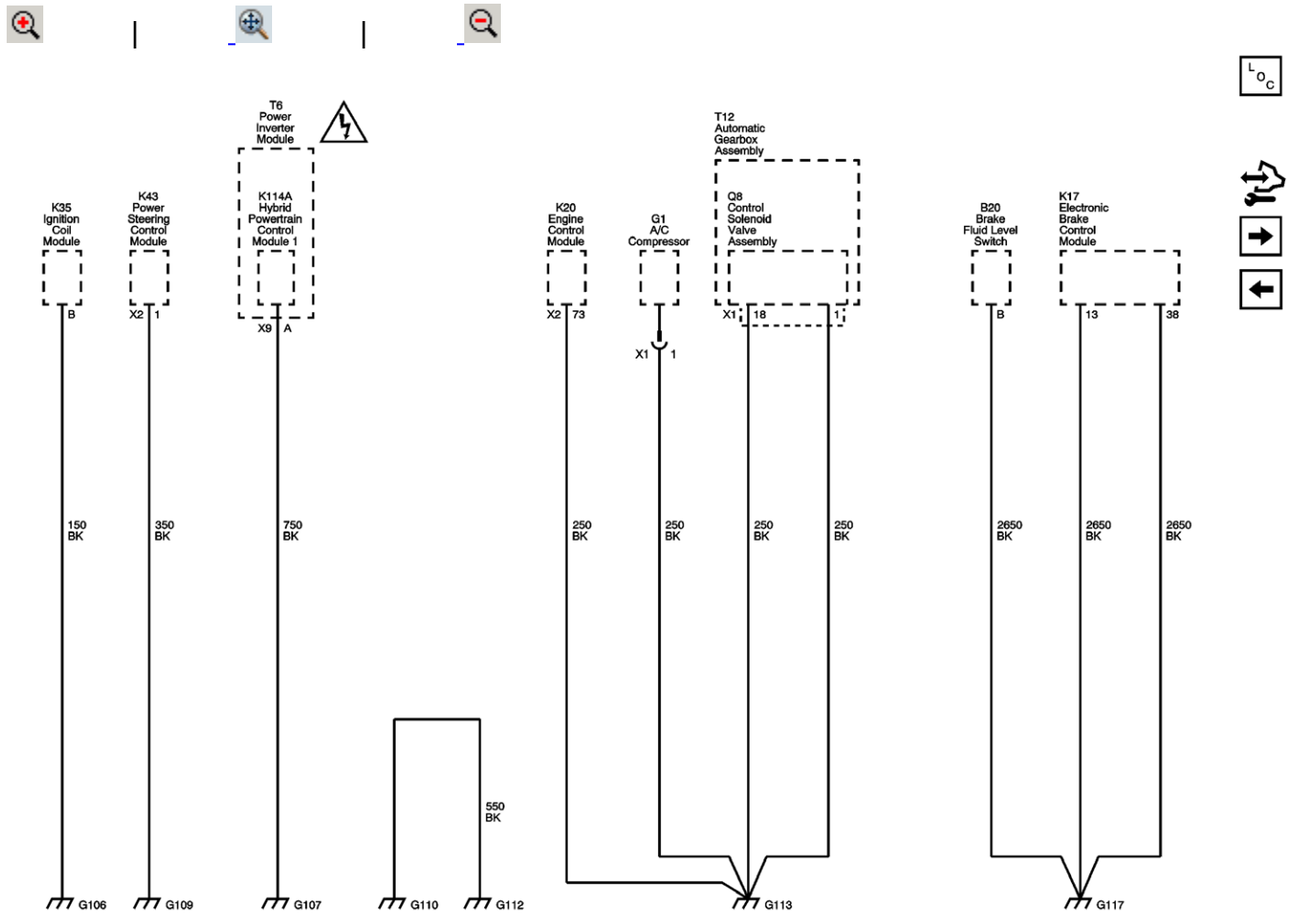

Master Electrical Component List

G201, G203, G205, G304, G401 and G404

G103, G104 and G105

© Copyright Chevrolet. All rights reserved

Power, Ground, Aerials and Serial Data

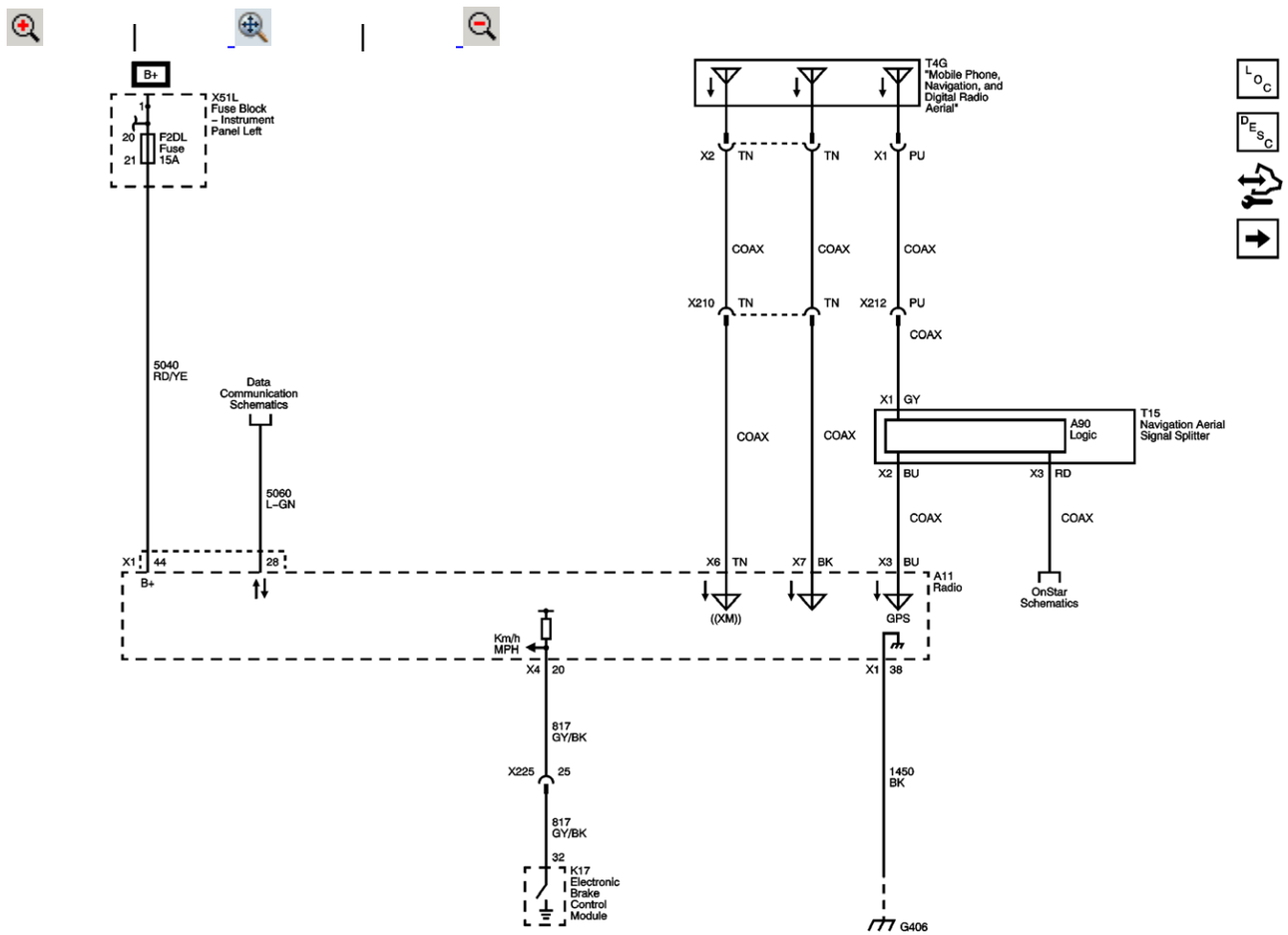

Master Electrical Component List

Radio/Audio System Description and Operation

Amplifier Inputs

F1DL, F2DL, F3DL, F4DL, F5DL, F6DL, F7DL, F10DL, F11DL and F15DL Fuses

Data Communication Schematics

Mobile Telephone

G301 and G406

© Copyright Chevrolet. All rights reserved

Amplifier Inputs

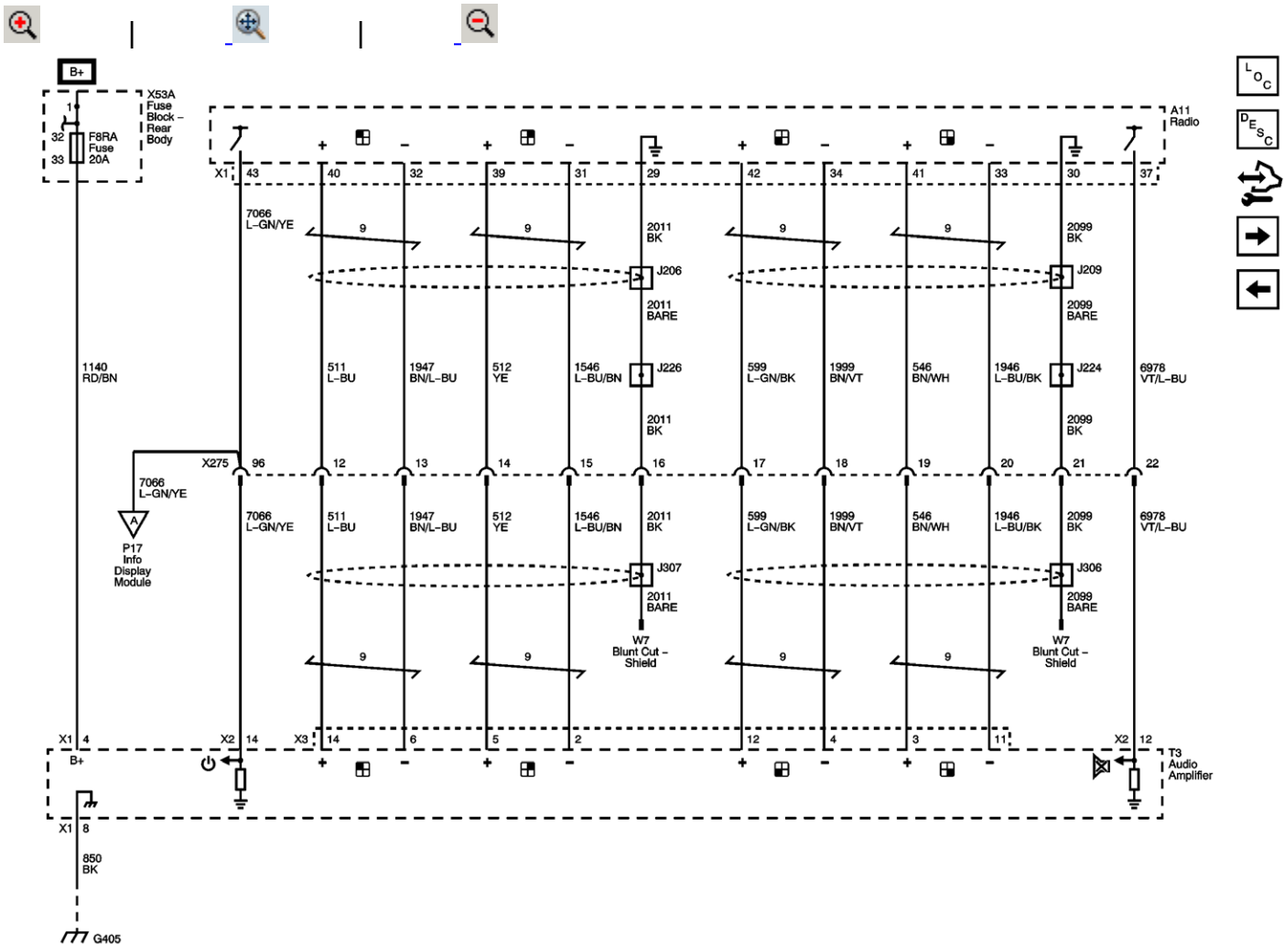

Master Electrical Component List

Radio/Audio System Description and Operation

Speakers

Power, Ground, Aerials and Data Communication

F2RA, F3RA, F4RA, F5RA, F7RA, F8RA, F10RA, F12RA and F13RA Fuses

Master Electrical Schematic Icons

Info Display

Master Electrical Schematic Icons

G405

© Copyright Chevrolet. All rights reserved

Speakers

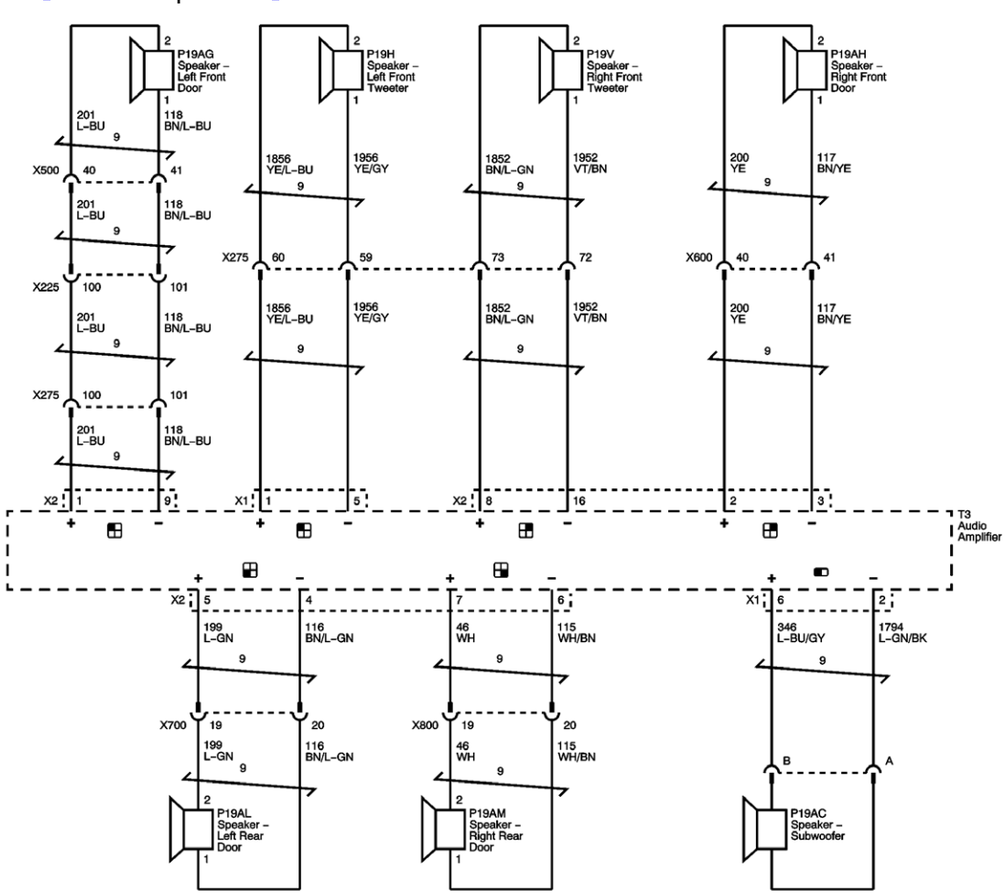
P19AG
Speaker –
Left Front
Door
P19H
Speaker –
Left Front
Tweeter
P19V
Speaker –
Right Front
Tweeter
P19AH
Speaker –
Right Front
Door
201
L–BU
118
BN/L–BU
1856
YE/L–BU
1956
YE/GY
1852
BN/L–GN
1952
VT/BN
200
YE
117
BN/YE
X500
X225
X275
X600
X2
X1
T3
Audio
Amplifier
199
L–GN
116
BN/L–GN
46
WH
115
WH/BN
346
L–BU/GY
1794
L–GN/BK
X700
X800
P19AL
Speaker –
Left Rear
Door
P19AM
Speaker –
Right Rear
Door
P19AC
Speaker –
Subwoofer

Master Electrical Component List

Radio/Audio System Description and Operation

Auxiliary Audio Input

Amplifier Inputs

Master Electrical Schematic Icons

© Copyright Chevrolet. All rights reserved

Speakers (UZ6)

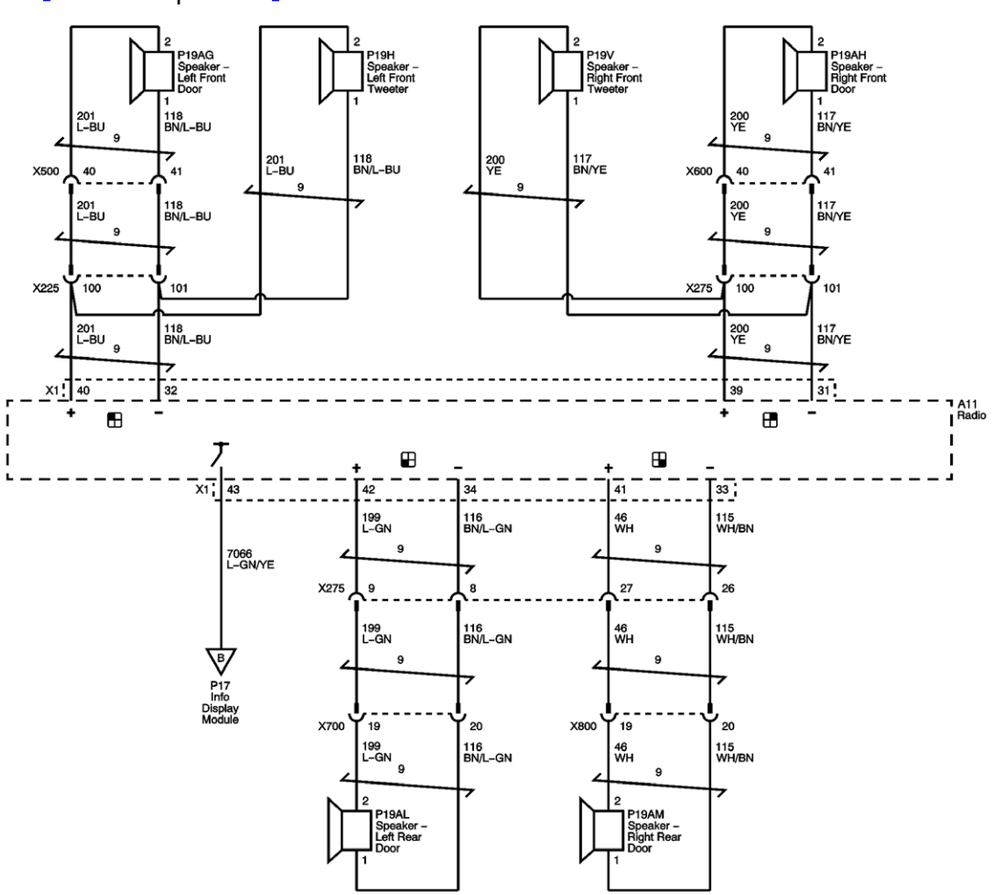

© Copyright Chevrolet. All rights reserved

Auxiliary Audio Input

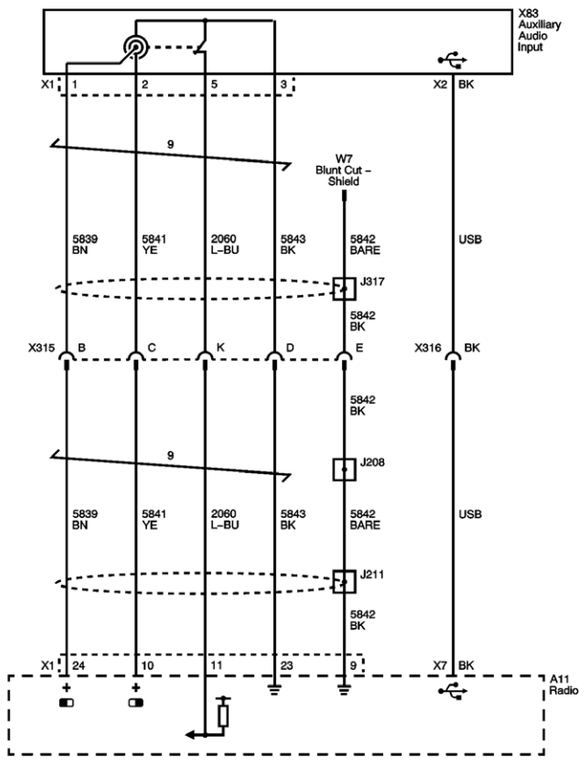

Master Electrical Component List

Radio/Audio System Description and Operation

Info Display

Speakers

Master Electrical Schematic Icons

© Copyright Chevrolet. All rights reserved

Info Display

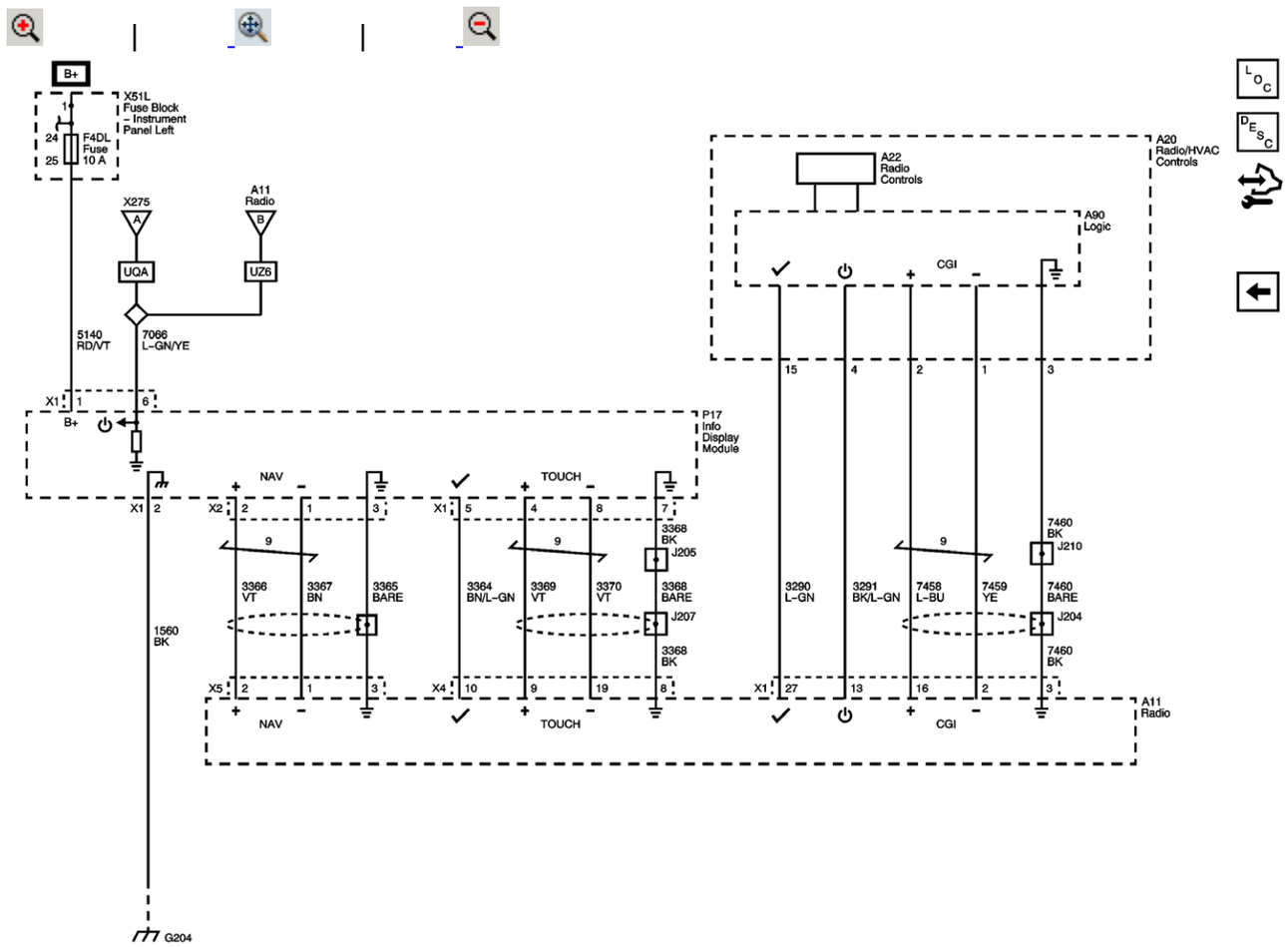

Master Electrical Component List

Radio/Audio System Description and Operation

Auxiliary Audio Input

F1DL, F2DL, F3DL, F4DL, F5DL, F6DL, F7DL, F10DL, F11DL and F15DL Fuses

Amplifier Inputs

Master Electrical Schematic Icons

G204

© Copyright Chevrolet. All rights reserved

Windscreen Wiper/Washer

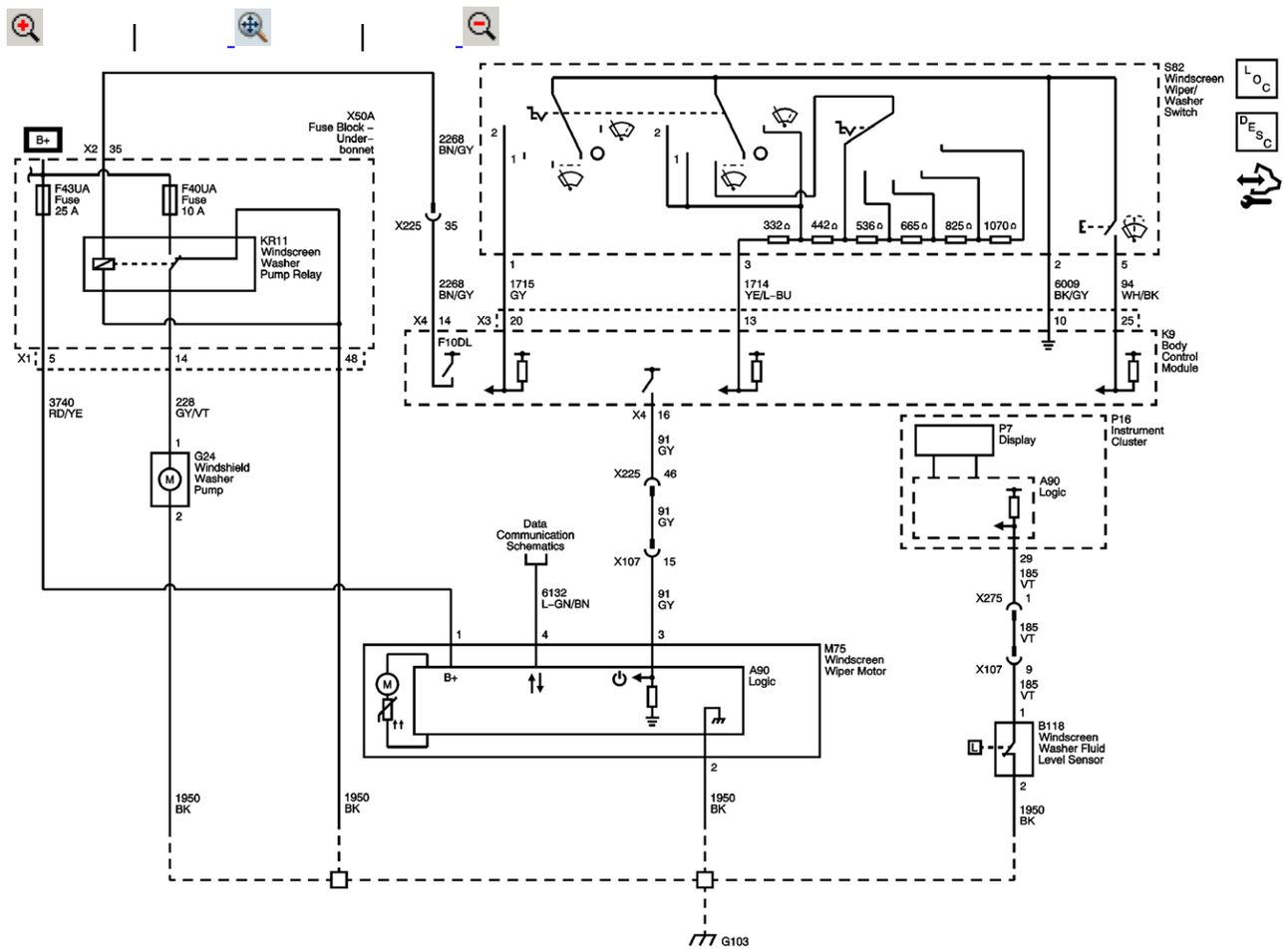

Master Electrical Component List

Wiper/Washer System Description and Operation

F6UA, F9UA, F22UA, F23UA, F40UA, F41UA and F43UA Fuses

F1DL, F2DL, F3DL, F4DL, F5DL, F6DL, F7DL, F10DL, F11DL and F15DL Fuses

Data Communication Schematics

G103, G104 and G105

© Copyright Chevrolet. All rights reserved

Power, Ground, MIL and Data Communication

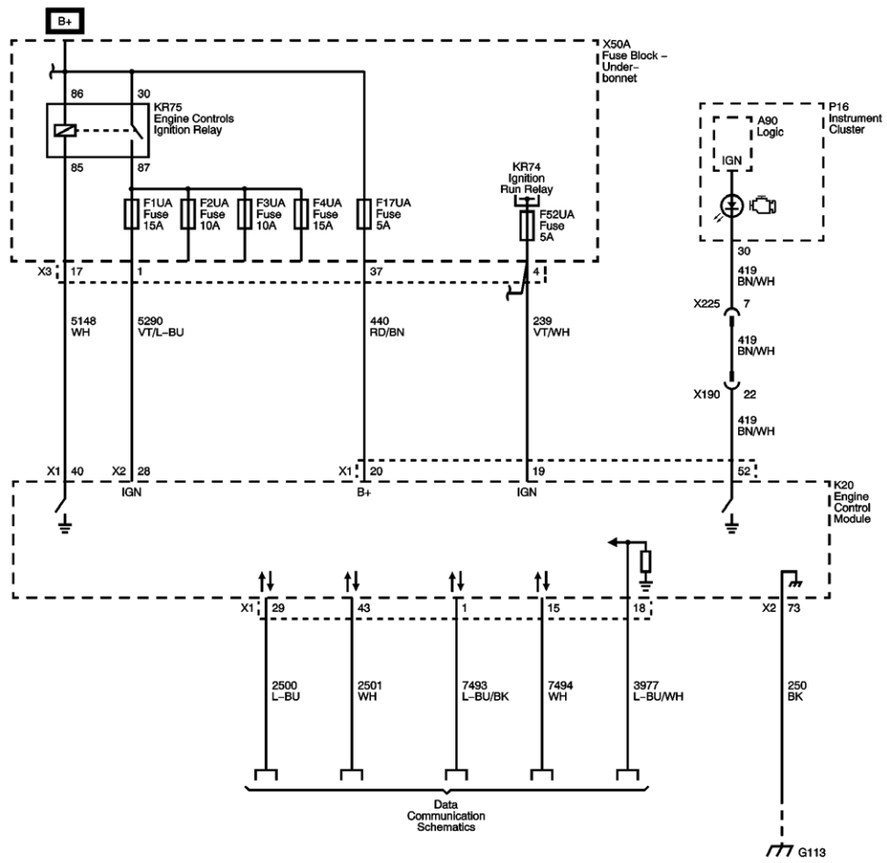

Master Electrical Component List

Engine Control Module Description

5-Volt and Low Reference Busses

F1UA, F2UA, F3UA, F4UA, F21UA, F30UA and F34UA Fuses

F10UA, F11UA, F12UA, F15UA, F17UA, F19UA and F39UA Fuses

F32UA, F33UA, F50UA, F51UA, F52UA, F53UA and F54UA Fuses

5-Volt and Low Reference Busses

Master Electrical Schematic Icons

Data Communication Schematics

G106, G109, G110, G112, G113 and G117

© Copyright Chevrolet. All rights reserved

Steering Wheel Controls

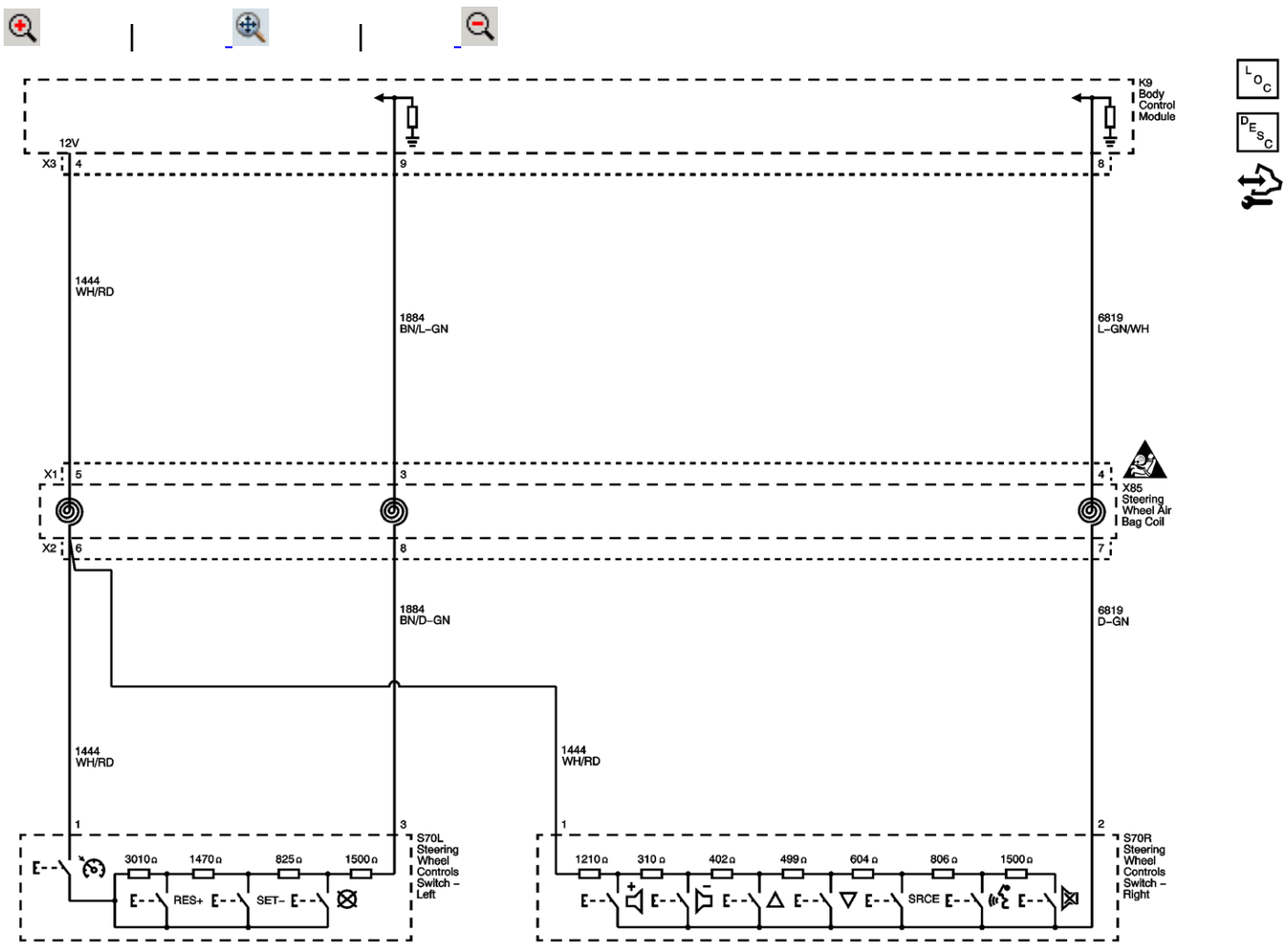

Master Electrical Component List

Steering Wheel Controls Description and Operation

Master Electrical Schematic Icons

© Copyright Chevrolet. All rights reserved

5-Volt and Low Reference Busses

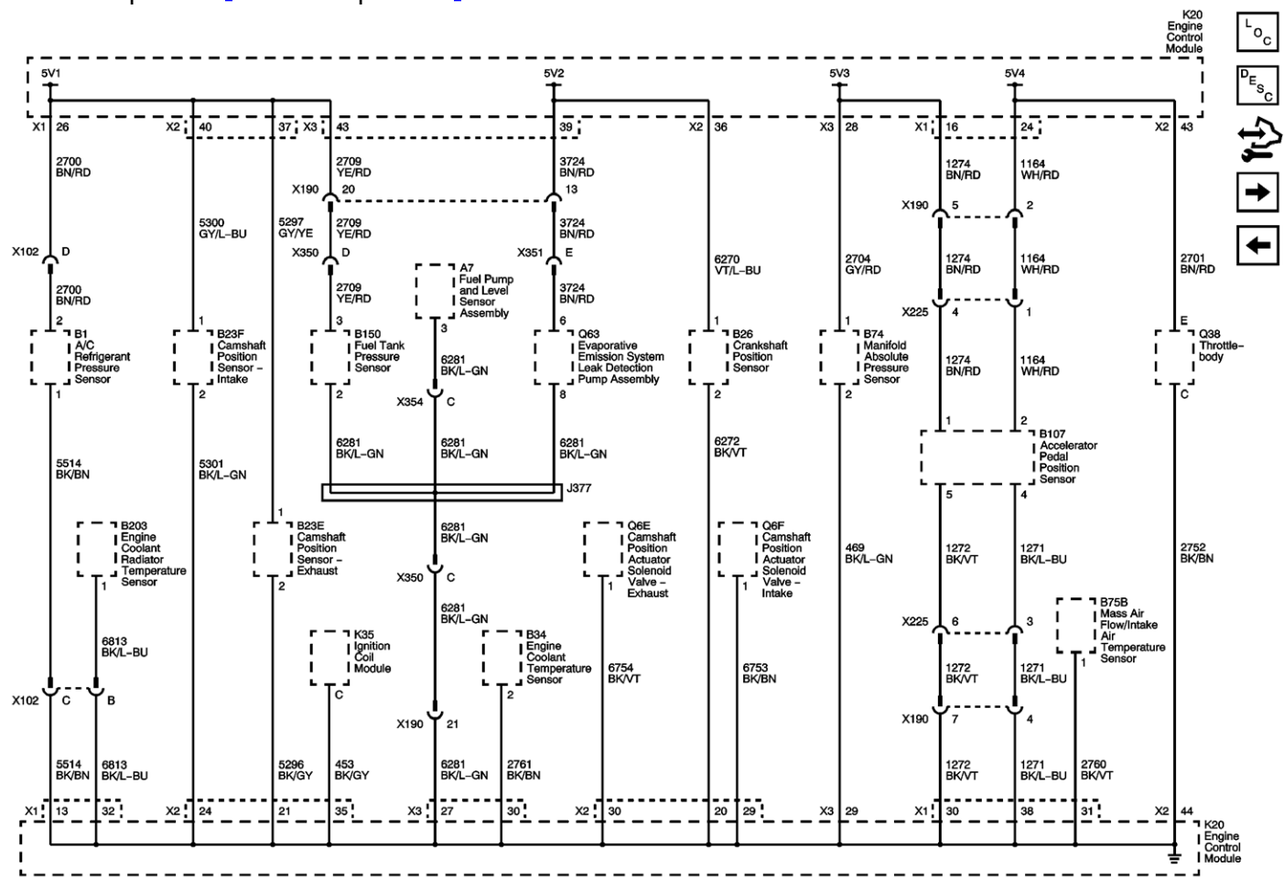

Master Electrical Component List

Engine Control Module Description

Engine Data Sensors - Pressure and Temperature

Power, Ground, MIL and Data Communication

© Copyright Chevrolet. All rights reserved

Engine Data Sensors - Pressure and Temperature

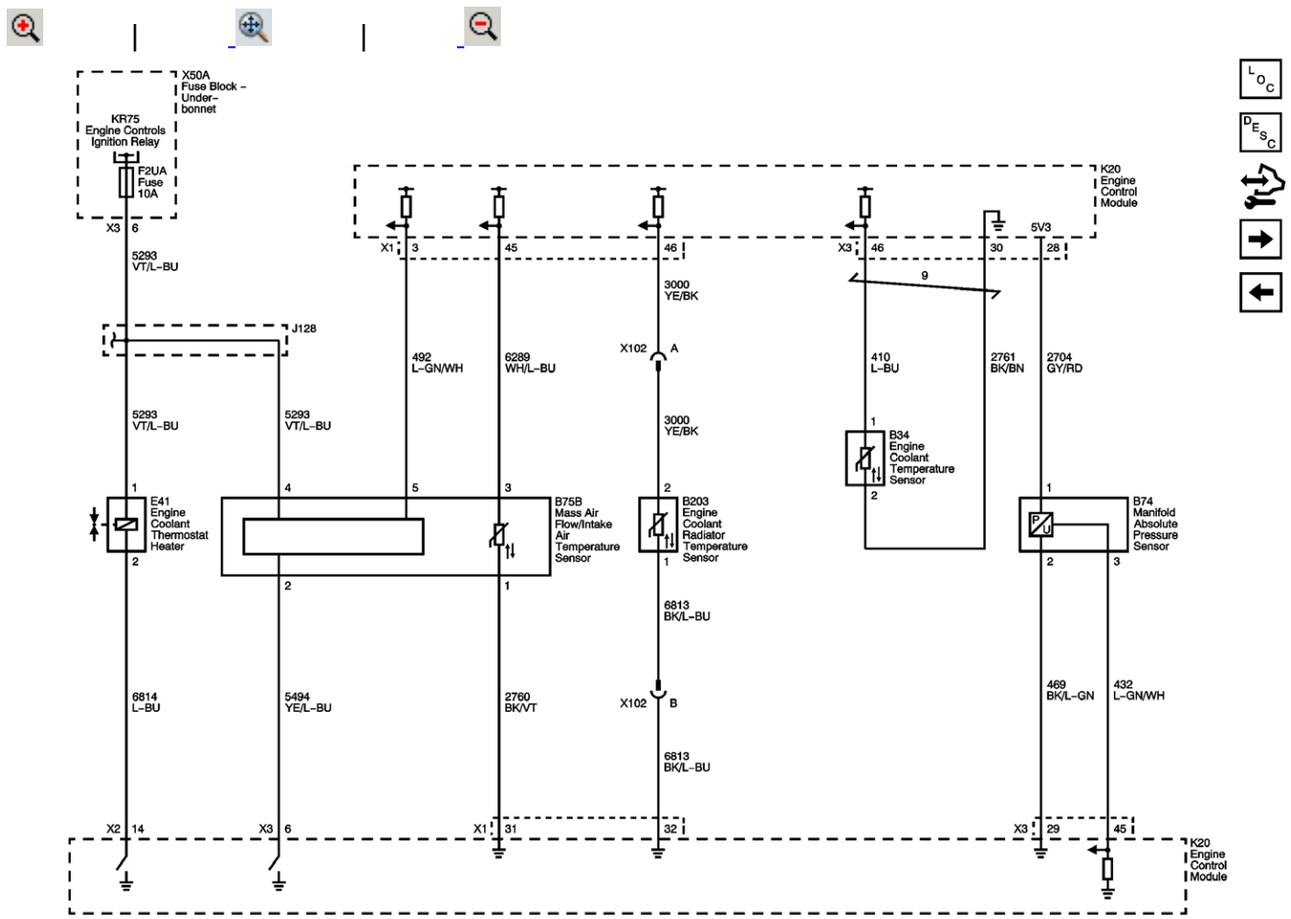

Master Electrical Component List

Engine Control Module Description

Engine Data Sensors - Oxygen Sensors

5-Volt and Low Reference Busses

Power, Ground, MIL and Data Communication

F1UA, F2UA, F3UA, F4UA, F21UA, F30UA and F34UA Fuses

Master Electrical Schematic Icons

F1UA, F2UA, F3UA, F4UA, F21UA, F30UA and F34UA Fuses

© Copyright Chevrolet. All rights reserved

Engine Data Sensors - Oxygen Sensors

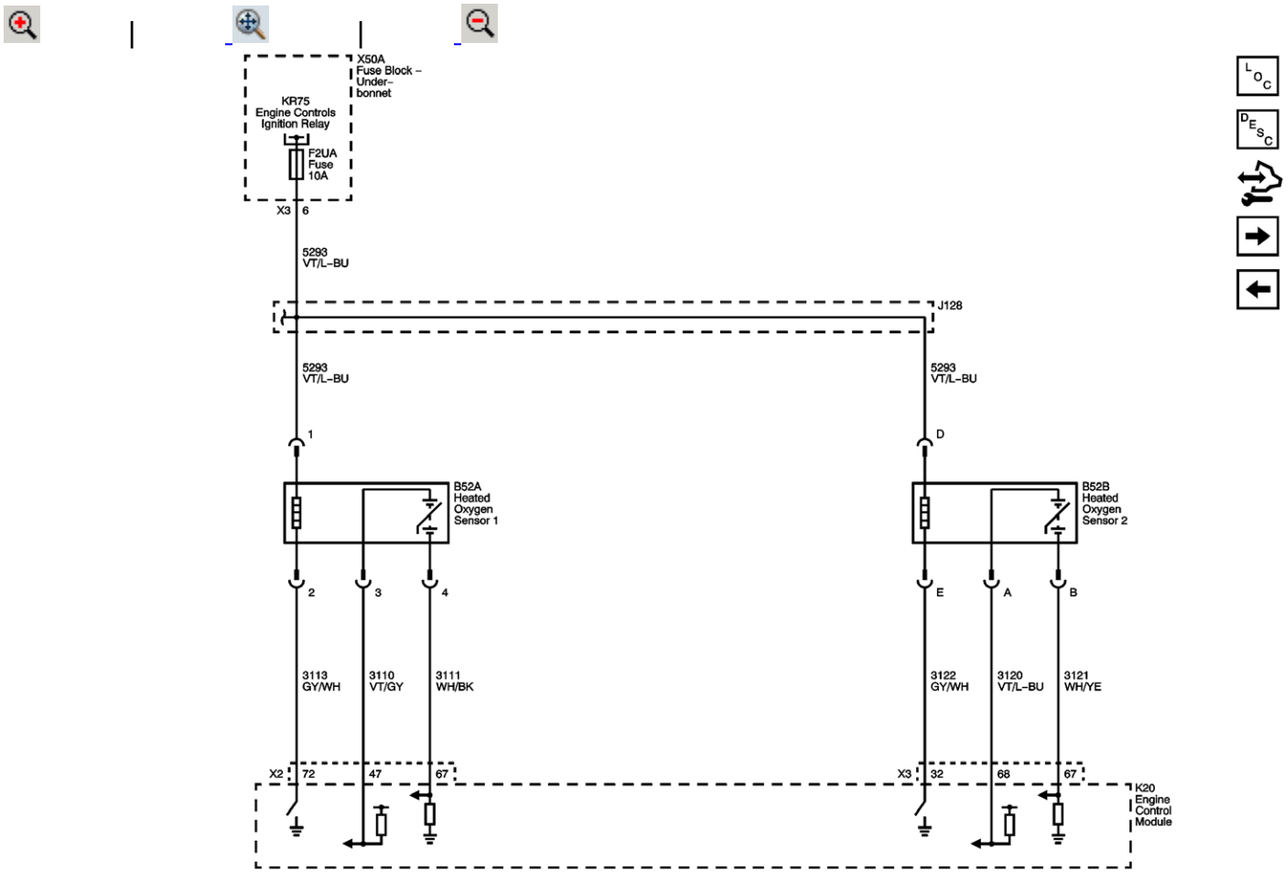

Master Electrical Component List

Engine Control Module Description

Engine Data Sensors - Throttle Controls

Engine Data Sensors - Pressure and Temperature

Power, Ground, MIL and Data Communication

F1UA, F2UA, F3UA, F4UA, F21UA, F30UA and F34UA Fuses

© Copyright Chevrolet. All rights reserved

Engine Data Sensors - Throttle Controls

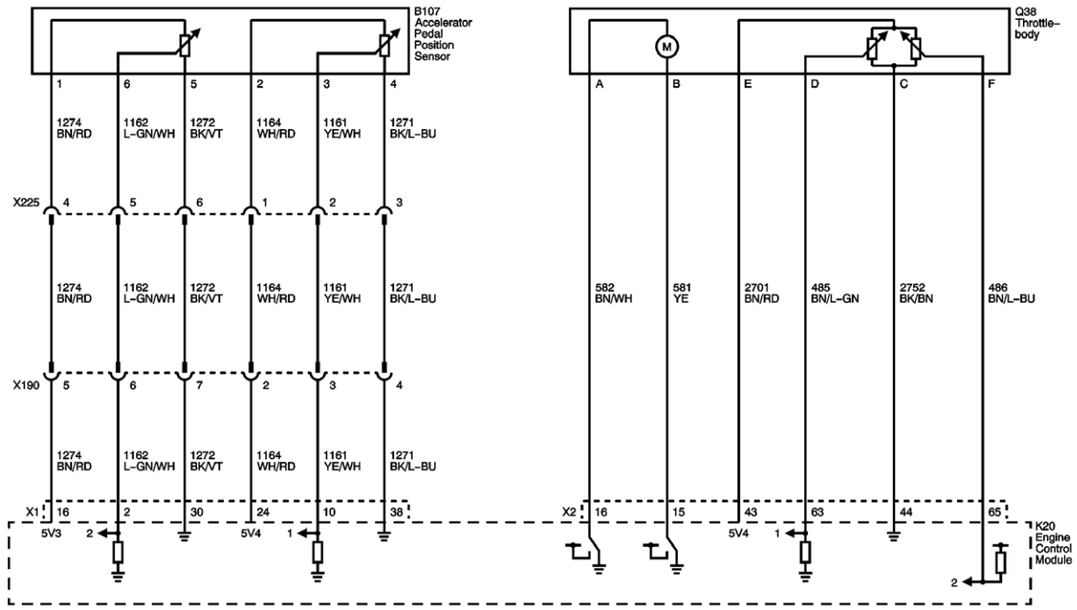

Master Electrical Component List

Throttle Actuator Control (TAC) System Description

Ignition Controls - Ignition Coil Module

Engine Data Sensors - Oxygen Sensors

© Copyright Chevrolet. All rights reserved

Ignition Controls - Ignition Coil Module

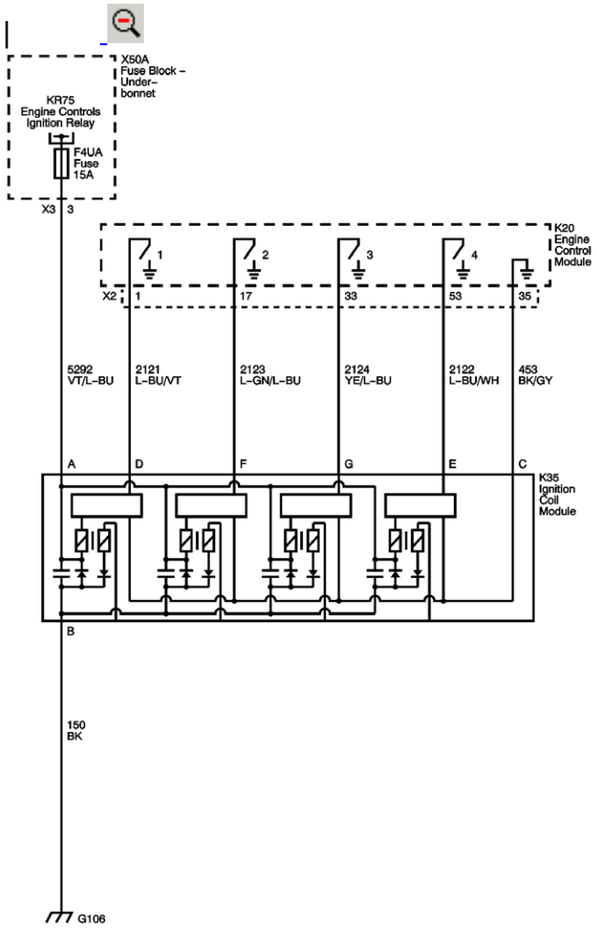

Master Electrical Component List

Electronic Ignition System Description

Ignition Controls - Sensors

Engine Data Sensors - Throttle Controls

Power, Ground, MIL and Data Communication

F1UA, F2UA, F3UA, F4UA, F21UA, F30UA and F34UA Fuses

G106, G109, G110, G112, G113 and G117

© Copyright Chevrolet. All rights reserved

Ignition Controls - Sensors

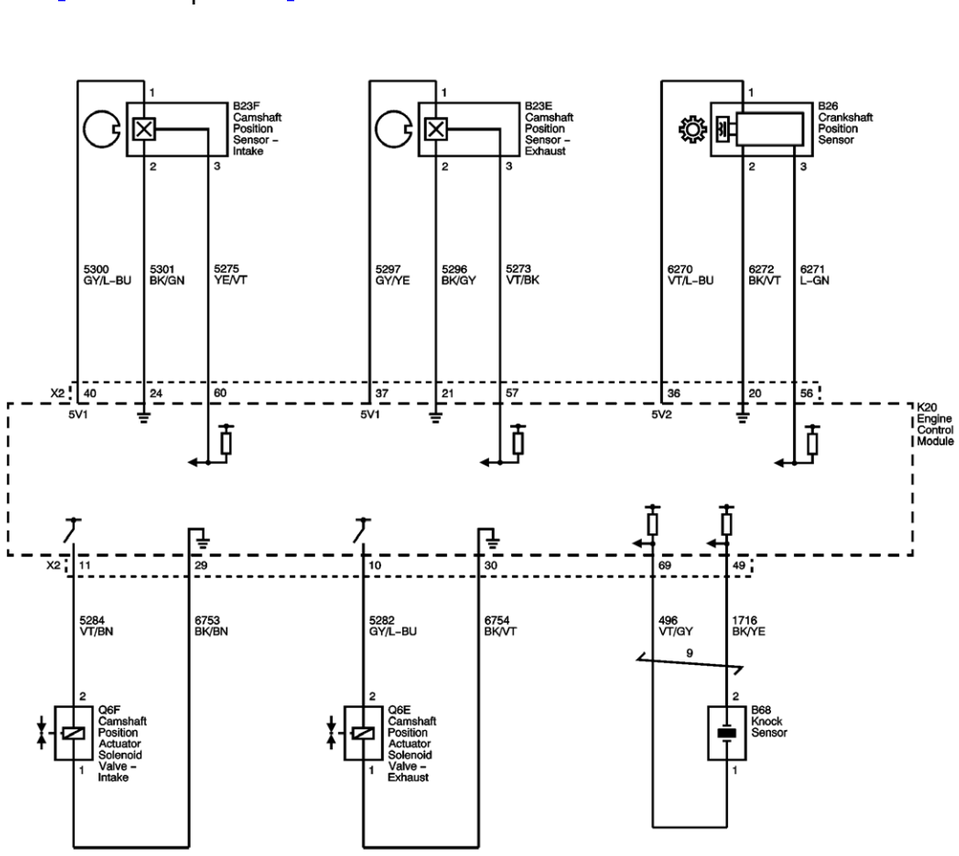

Master Electrical Component List

Electronic Ignition System Description

Fuel Controls -- Fuel Pump Controls

Ignition Controls - Ignition Coil Module

Master Electrical Schematic Icons

© Copyright Chevrolet. All rights reserved

Fuel Controls -- Fuel Pump Controls

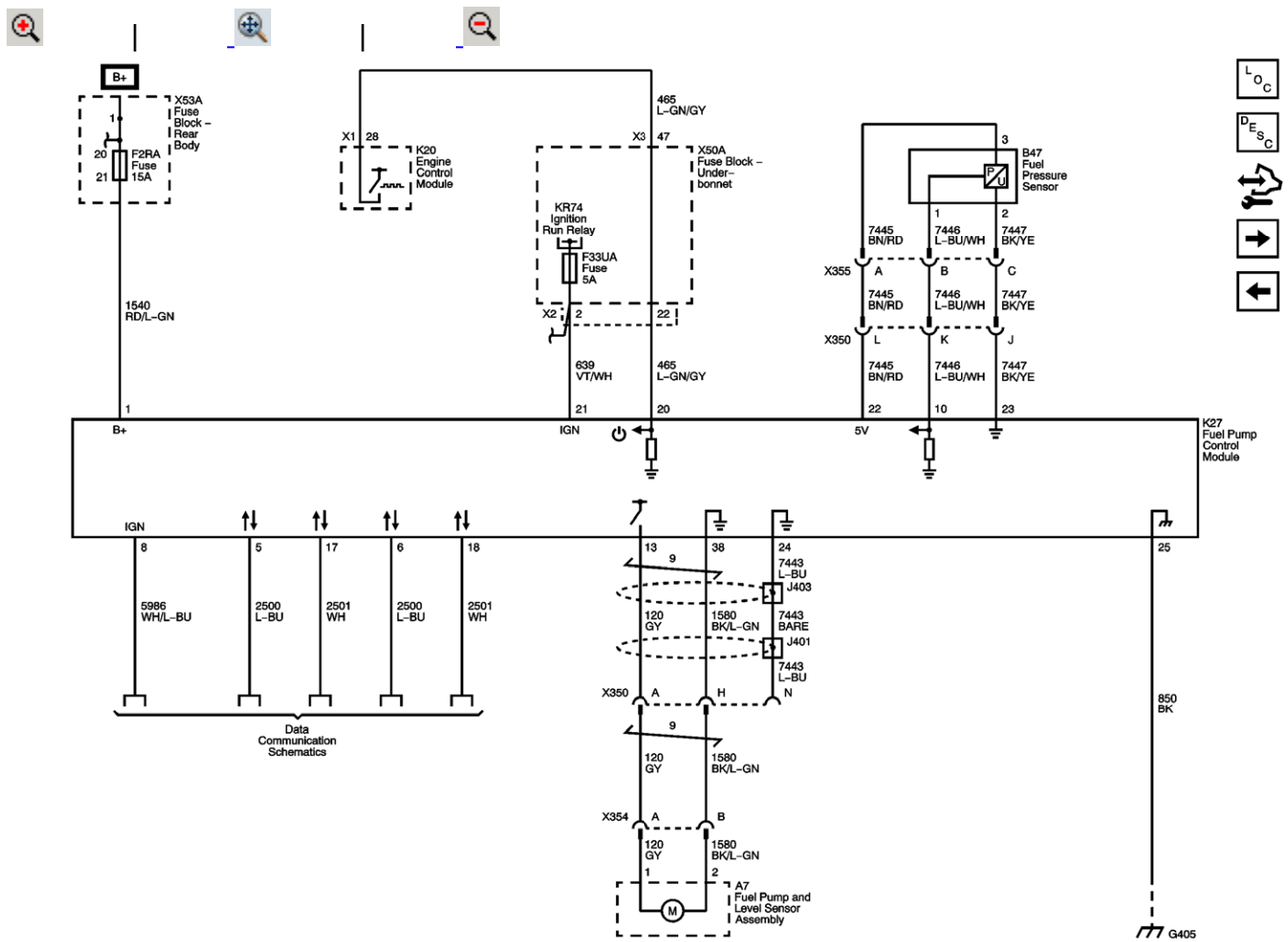

Master Electrical Component List

Fuel System Description

Fuel Controls - Fuel Injectors

Ignition Controls - Sensors

F2RA, F3RA, F4RA, F5RA, F7RA, F8RA, F10RA, F12RA and F13RA Fuses

F32UA, F33UA, F50UA, F51UA, F52UA, F53UA and F54UA Fuses

Master Electrical Schematic Icons

Data Communication Schematics

G405

© Copyright Chevrolet. All rights reserved

Fuel Controls - Fuel Injectors

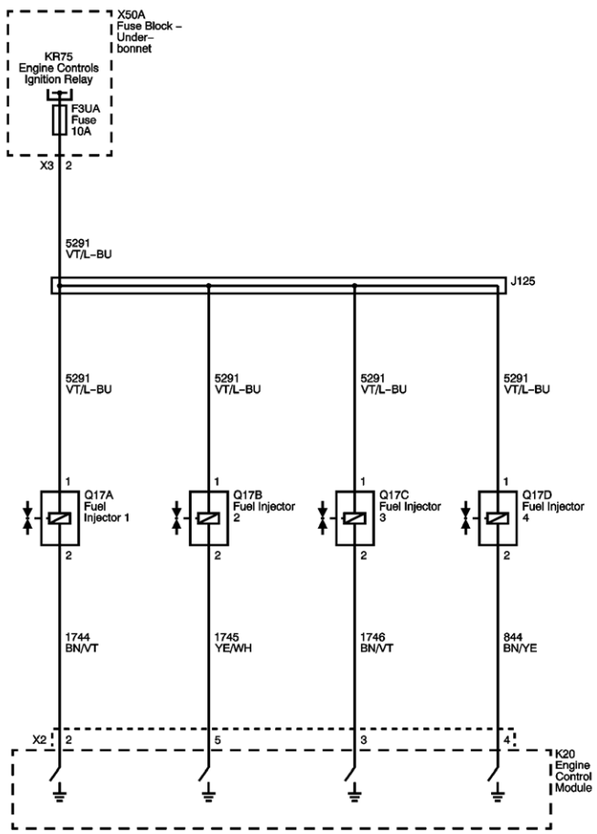

Master Electrical Component List

Fuel System Description

Fuel Controls - Evaporative Emission Controls

Fuel Controls -- Fuel Pump Controls

Power, Ground, MIL and Data Communication

F1UA, F2UA, F3UA, F4UA, F21UA, F30UA and F34UA Fuses

© Copyright Chevrolet. All rights reserved

Fuel Controls - Evaporative Emission Controls

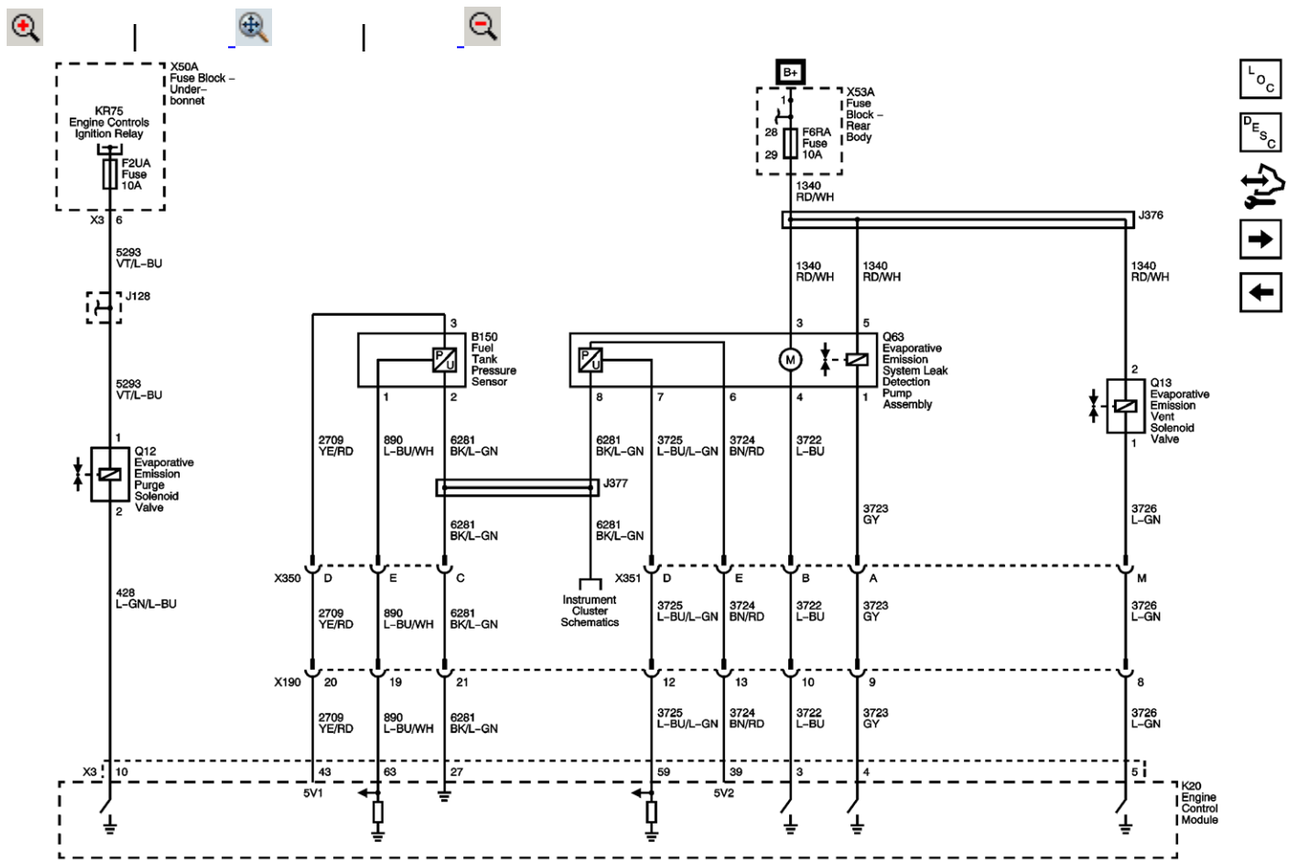

Master Electrical Component List

Evaporative Emission Control System Description

Controlled/Monitored Subsystem References

Fuel Controls - Fuel Injectors

Power, Ground, MIL and Data Communication

F6RA, F11RA, F14RA and F16RA Fuses

F1UA, F2UA, F3UA, F4UA, F21UA, F30UA and F34UA Fuses

Power, Ground, Data Communication and Indicators

© Copyright Chevrolet. All rights reserved

Controlled/Monitored Subsystem References

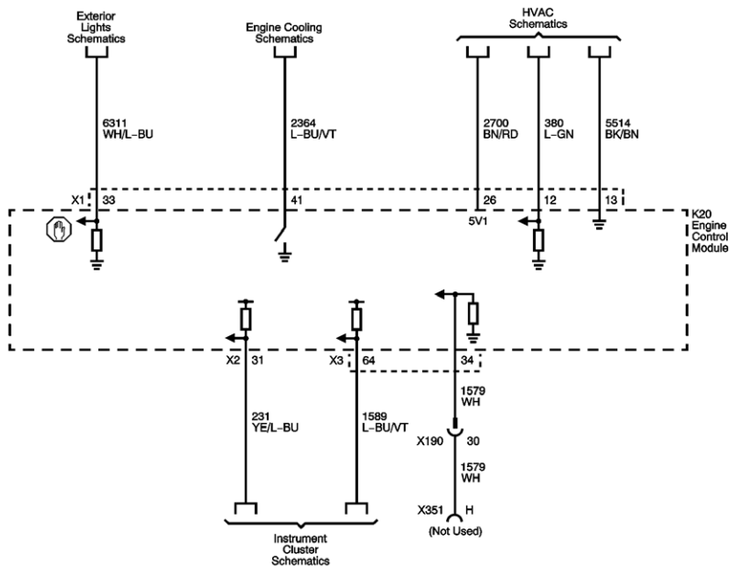

Master Electrical Component List

Engine Control Module Description

Fuel Controls - Evaporative Emission Controls

Rear Indicators, Brake Lamps, Rear Fog Lamp and Reverse Lamp

Engine Cooling Fans

Compressor Controls

© Copyright Chevrolet. All rights reserved

X50D Fuse Block - Battery and X50B Fuse Block - Underbonnet Auxiliary Bussing

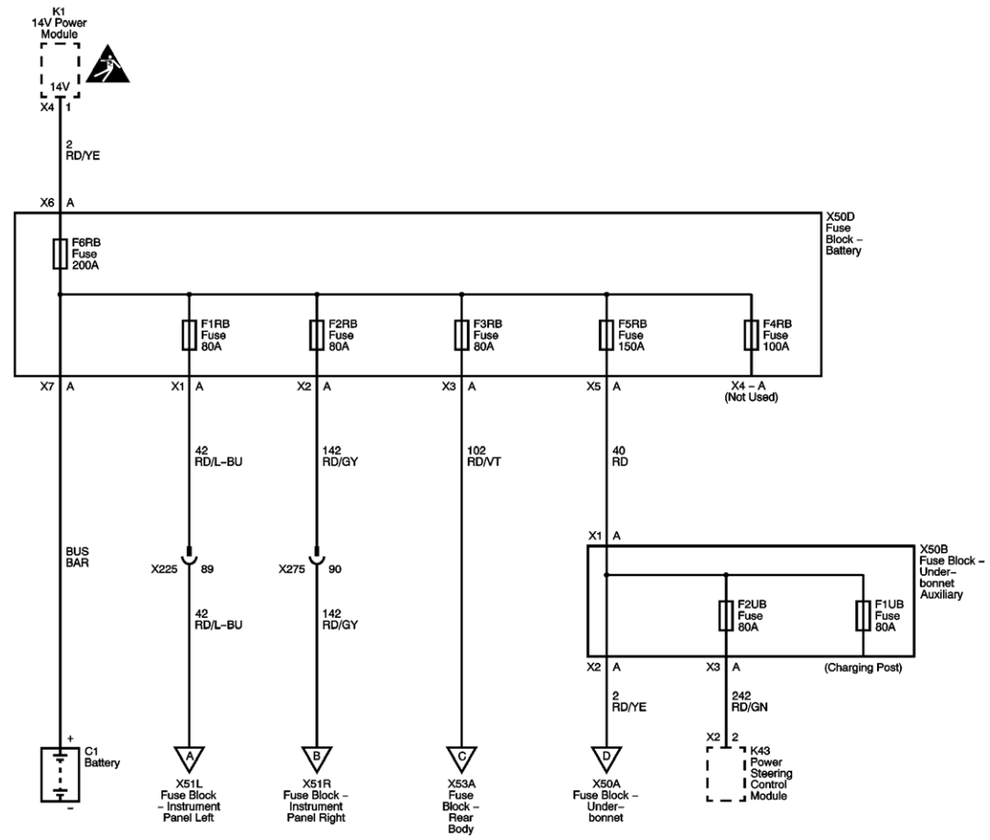

Master Electrical Component List

X50A Fuse Block - Underbonnet Bussing

Master Electrical Schematic Icons

F1DL, F2DL, F3DL, F4DL, F5DL, F6DL, F7DL, F10DL, F11DL and F15DL Fuses

F4DR, F5DR, F6DR, F7DR, F8DR, F9DR, F10DR, F11DR and F12DR Fuses

F2RA, F3RA, F4RA, F5RA, F7RA, F8RA, F10RA, F12RA and F13RA Fuses

X50A Fuse Block - Underbonnet Bussing

© Copyright Chevrolet. All rights reserved

G201, G203, G205, G304, G401 and G404

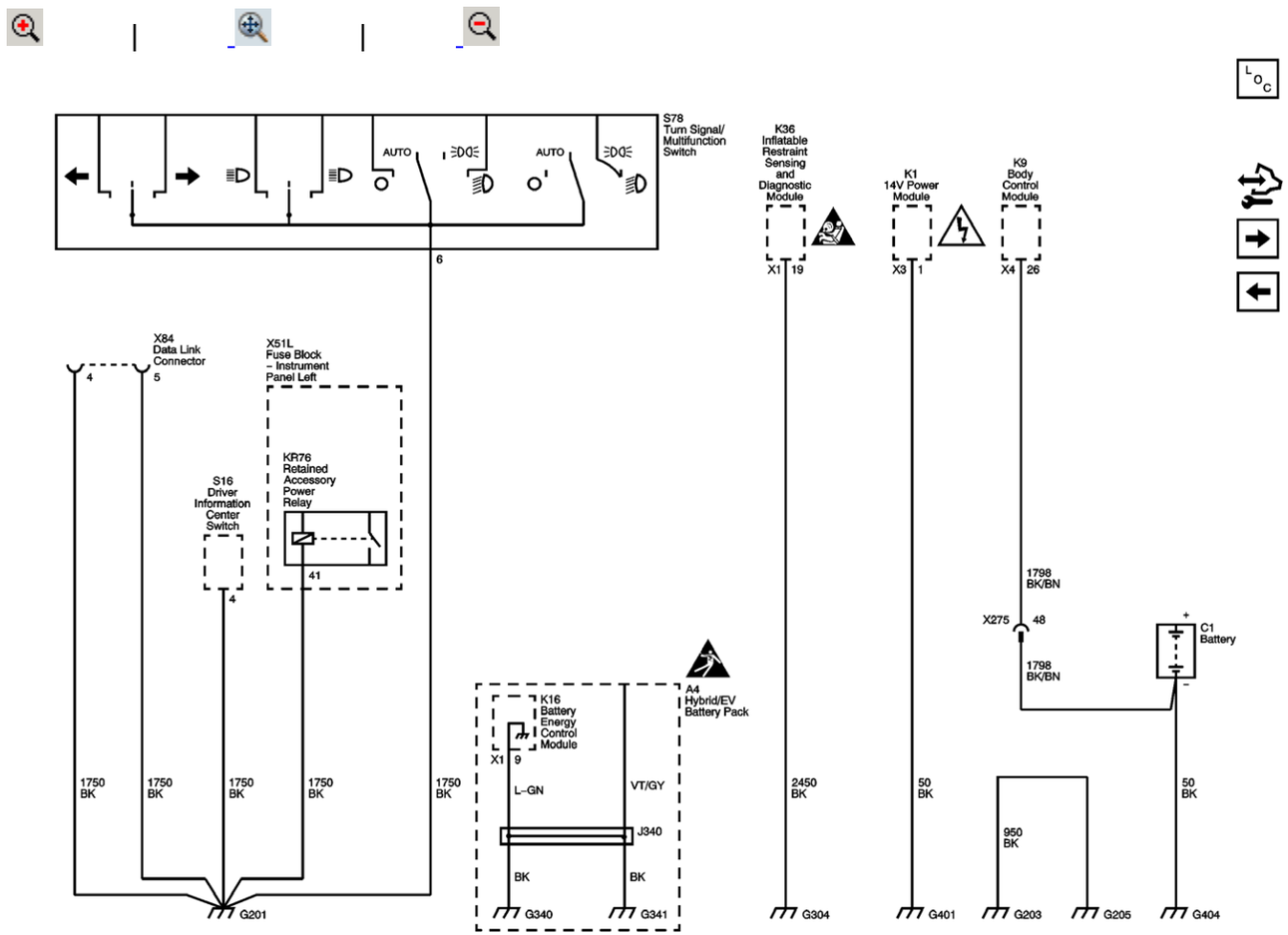

Master Electrical Component List

202

G106, G109, G110, G112, G113 and G117

Master Electrical Schematic Icons

Cigarette Lighter/Power Outlets

© Copyright Chevrolet. All rights reserved

Accessory Drive Components

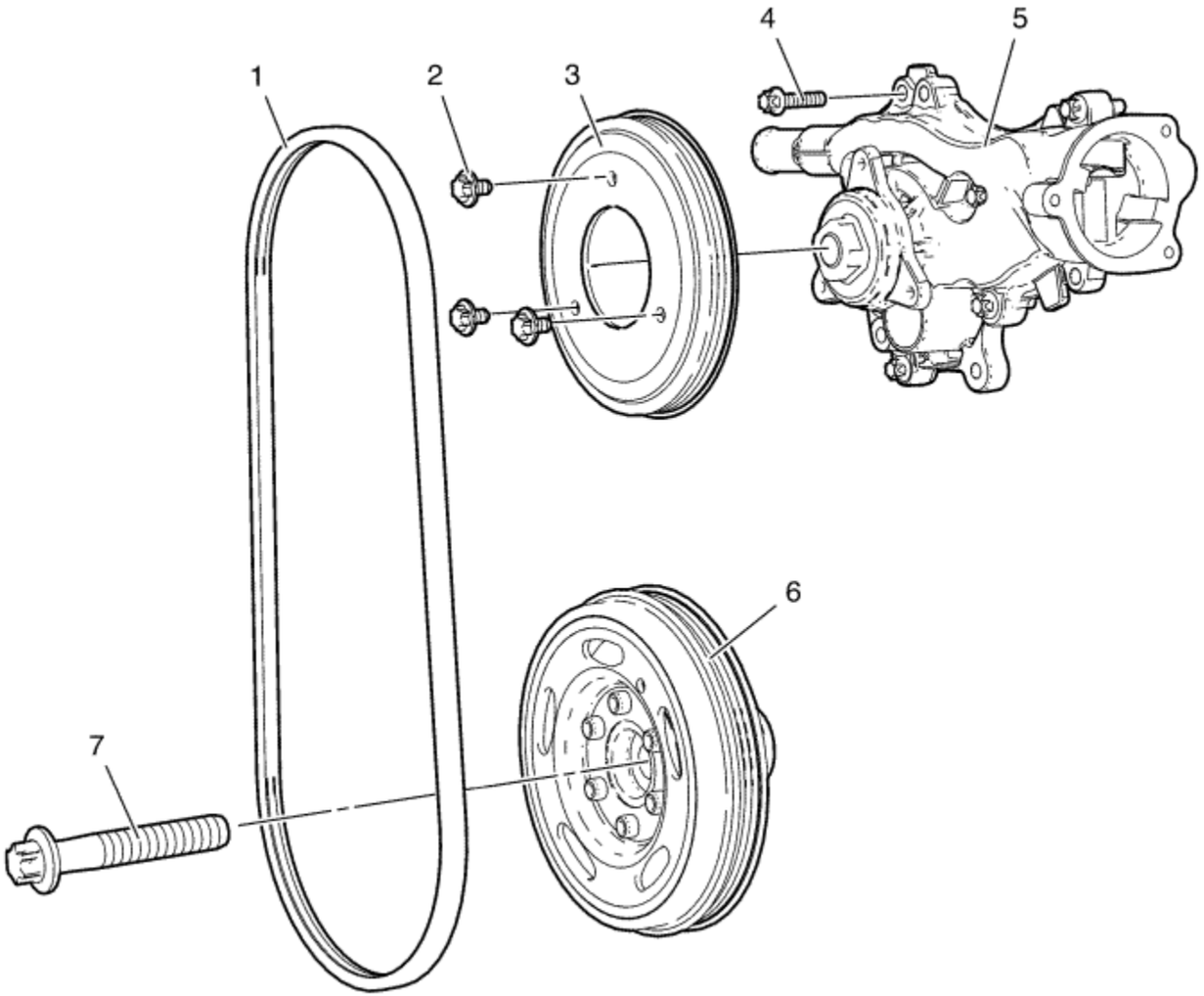

(1) Water Pump Belt
(2) Water Pump Pulley Bolt
(3) Water Pump Pulley
(4) Water Pump Bolt
(5) Water Pump
(6) Crankshaft Balancer

(7) Crankshaft Balancer Bolt

© Copyright Chevrolet. All rights reserved

Engine Front Cover And Oil Pump Assembly (1 of 2)

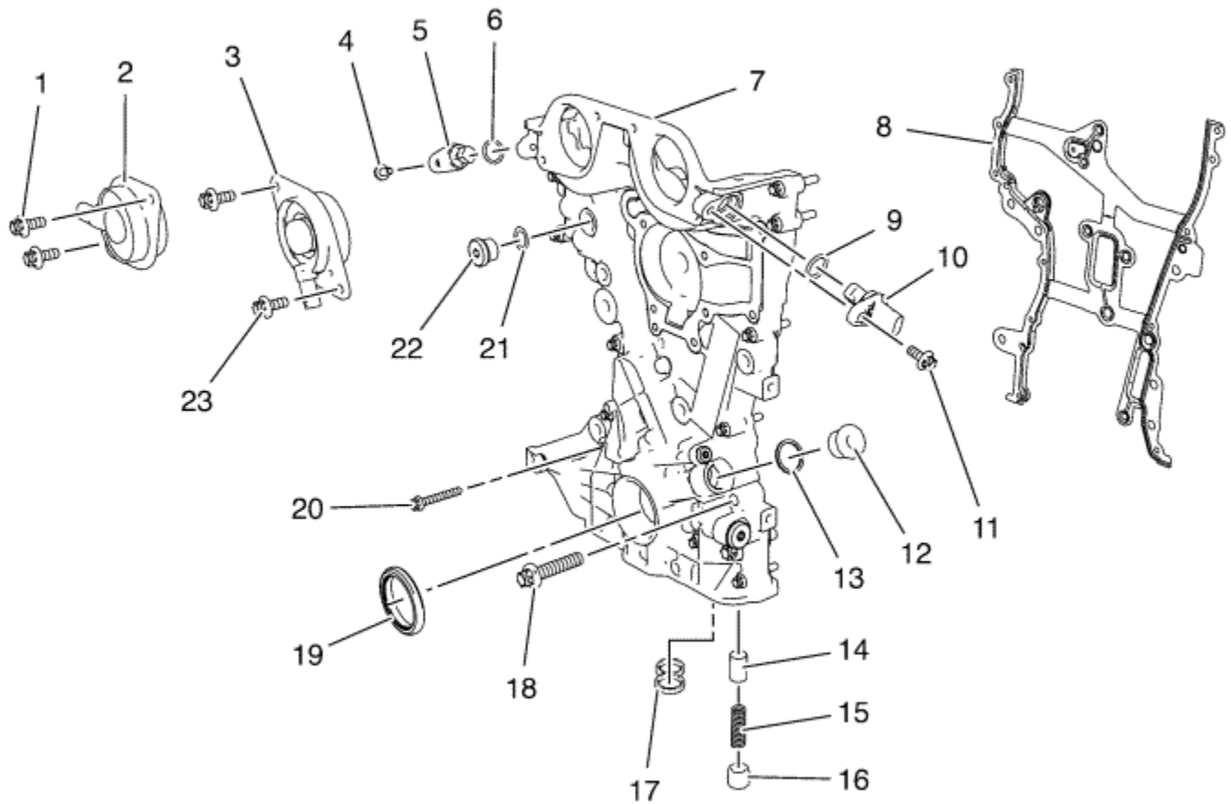

(1) Camshaft Position Actuator Solenoid Valve Bolt
(2) Intake Camshaft Position Actuator Solenoid Valve
(3) Exhaust Camshaft Position Actuator Solenoid Valve
(4) Intake Camshaft Position Sensor Bolt
(5) Intake Camshaft Position Sensor
(6) Intake Camshaft Position Sensor Seal Ring

(7) Engine Front Cover
(8) Engine Front Cover Gasket
(9) Exhaust Camshaft Position Sensor Seal Ring
(10) Exhaust Camshaft Position Sensor
(11) Exhaust Camshaft Position Sensor Bolt
(12) Engine Front Cover Oil Gallery Plug
(13) Engine Front Cover Oil Gallery Plug Seal Ring
(14) Oil Pressure Relief Valve Piston
(15) Oil Pressure Relief Valve Spring
(16) Oil Pressure Relief Valve Plug
(17) Oil Sump Sealing
(18) Engine Front Cover Bolt (M10)
(19) Crankshaft Front Oil Seal
(20) Engine Front Cover Bolt (M6)
(21) Water Drain Plug Seal Ring
(22) Water Drain Plug
(23) Exhaust Camshaft Position Actuator Solenoid Valve Bolt

© Copyright Chevrolet. All rights reserved

Engine Front Cover And Oil Pump Assembly (2 of 2)

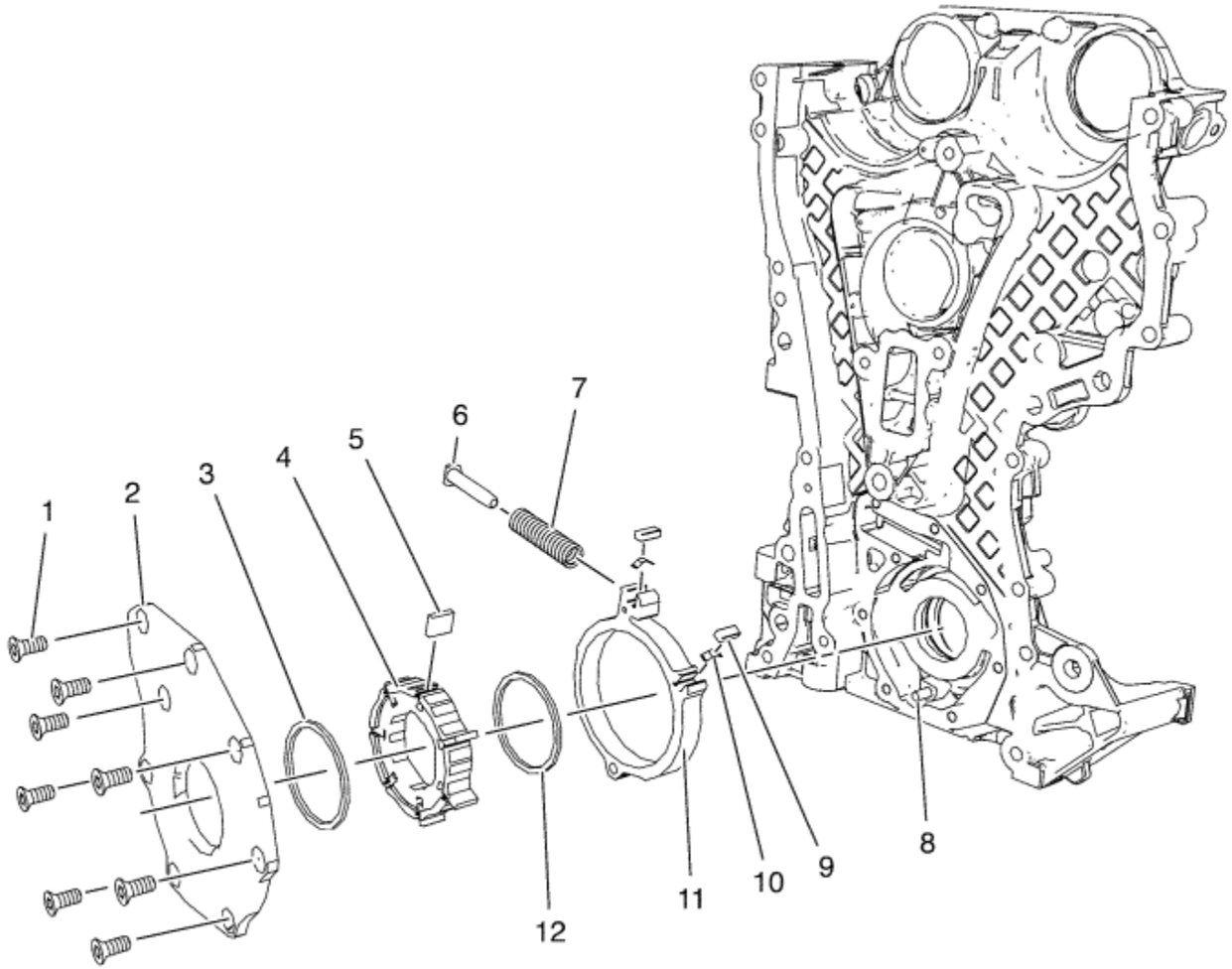

(1) Oil Pump Cover Bolt
(2) Oil Pump Cover
(3) Oil Pump Vane Ring
(4) Oil Pump Vane Rotor
(5) Oil Pump Vane
(6) Oil Pump Slide Spring Pin

(7) Oil Pump Slide Spring
(8) Oil Pump Slide Pivot Pin
(9) Oil Pump Slide Seal
(10) Oil Pump Slide Seal Spring
(11) Oil Pump Slide
(12) Oil Pump Vane Ring

© Copyright Chevrolet. All rights reserved

Timing Chain Components

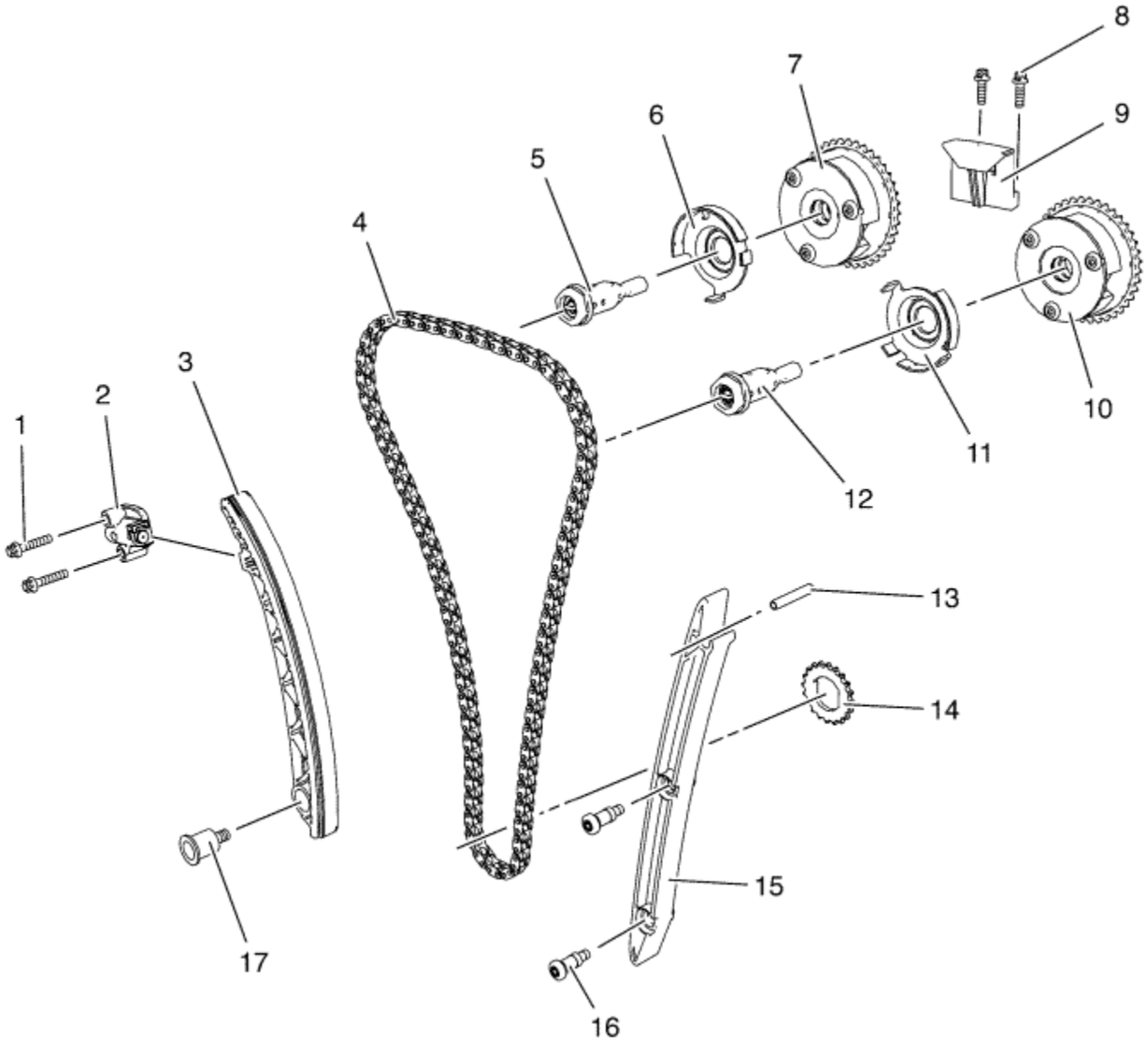

(1) Timing Chain Tensioner Bolt
(2) Timing Chain Tensioner
(3) Timing Chain Tensioner Shoe
(4) Camshaft Timing Chain
(5) Intake Camshaft Sprocket Bolt (With Actuator)
(6) Intake Camshaft Position Sensor Exciter Wheel

(7) Intake Camshaft Sprocket (With Position Actuator)
(8) Upper Timing Chain Guide Bolt
(9) Upper Timing Chain Guide
(10) Exhaust Camshaft Sprocket (With Position Actuator)
(11) Exhaust Camshaft Position Sensor Exciter Wheel
(12) Exhaust Camshaft Sprocket Bolt (With Actuator)
(13) Timing Chain Guide Pivot Pin
(14) Crankshaft Sprocket
(15) Timing Chain Guide Right Side
(16) Timing Chain Guide Bolt
(17) Timing Chain Tensioner Shoe Bolt

© Copyright Chevrolet. All rights reserved

Inlet Manifold Assembly

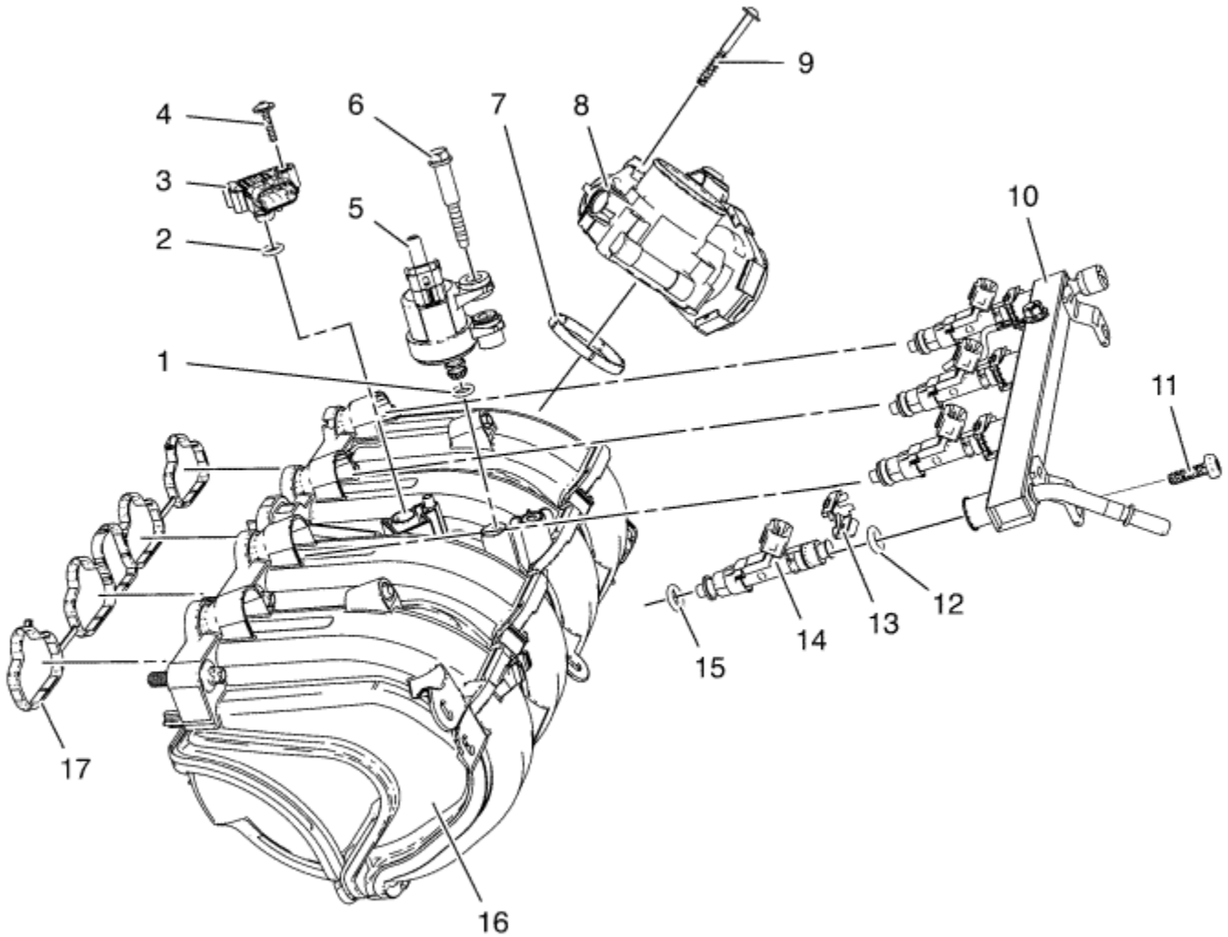

(1) Evaporative Emission Canister Purge Solenoid Valve Seal Ring
(2) Manifold Absolute Pressure Sensor Seal Ring
(3) Manifold Absolute Pressure Sensor
(4) Manifold Absolute Pressure Sensor Bolt
(5) Evaporative Emission Canister Purge Solenoid Valve
(6) Evaporative Emission Canister Purge Solenoid Valve Bolt

(7) Throttle Body Seal Ring
(8) Throttle Body
(9) Throttle Body Bolt
(10) Fuel Injection Fuel Rail
(11) Fuel Injection Fuel Rail Bolt
(12) Fuel Injector Seal Ring
(13) Fuel Injector Retainer Clamp
(14) Fuel Injector
(15) Fuel Injector Seal Ring
(16) Inlet Manifold
(17) Inlet Manifold Gasket

© Copyright Chevrolet. All rights reserved

Cylinder Head Assembly

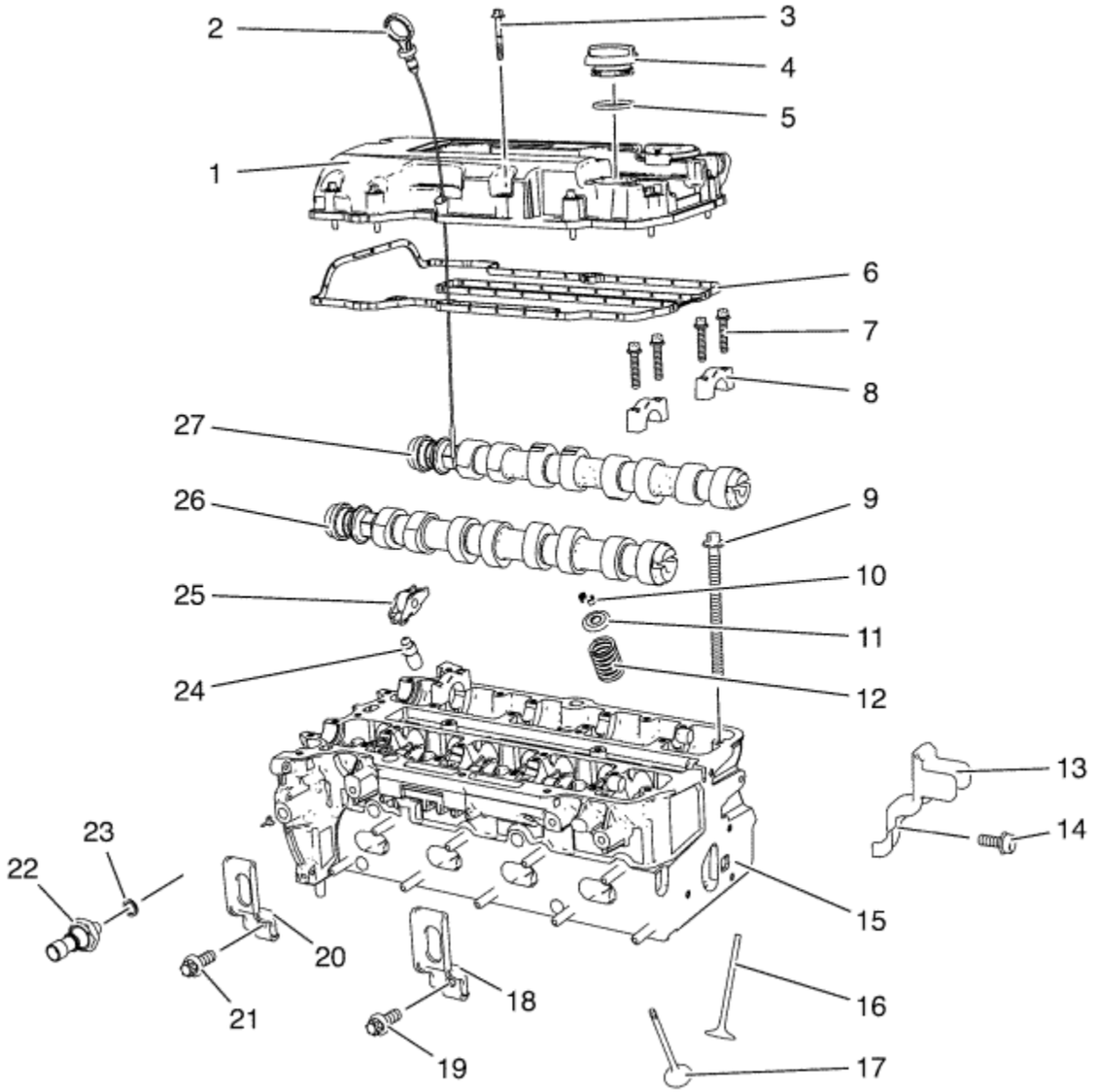

(1) Camshaft Cover
(2) Oil Level Indicator
(3) Camshaft Cover Bolt
(4) Oil Filler Cap
(5) Oil Filler Cap Seal Ring
(6) Camshaft Cover Gasket

(7) Camshaft Bearing Cap Bolt
(8) Camshaft Bearing Cap
(9) Cylinder Head Bolt
(10) Valve Keys
(11) Valve Spring Retainer
(12) Valve Spring
(13) Engine Lift Bracket Left Side
(14) Engine Lift Bracket Bolt
(15) Cylinder Head
(16) Inlet Valve
(17) Exhaust Valve
(18) Engine Lift Bracket
(19) Engine Lift Bracket Bolt
(20) Engine Lift Bracket
(21) Engine Lift Bracket Bolt
(22) Oil Pressure Indicator Switch
(23) Oil Pressure Indicator Switch Seal Ring
(24) Hydraulic Valve Clearance Adjuster
(25) Hydraulic Valve Clearance Adjuster Arm
(26) Exhaust Camshaft
(27) Intake Camshaft

© Copyright Chevrolet. All rights reserved

Volt

Engine Block Assembly

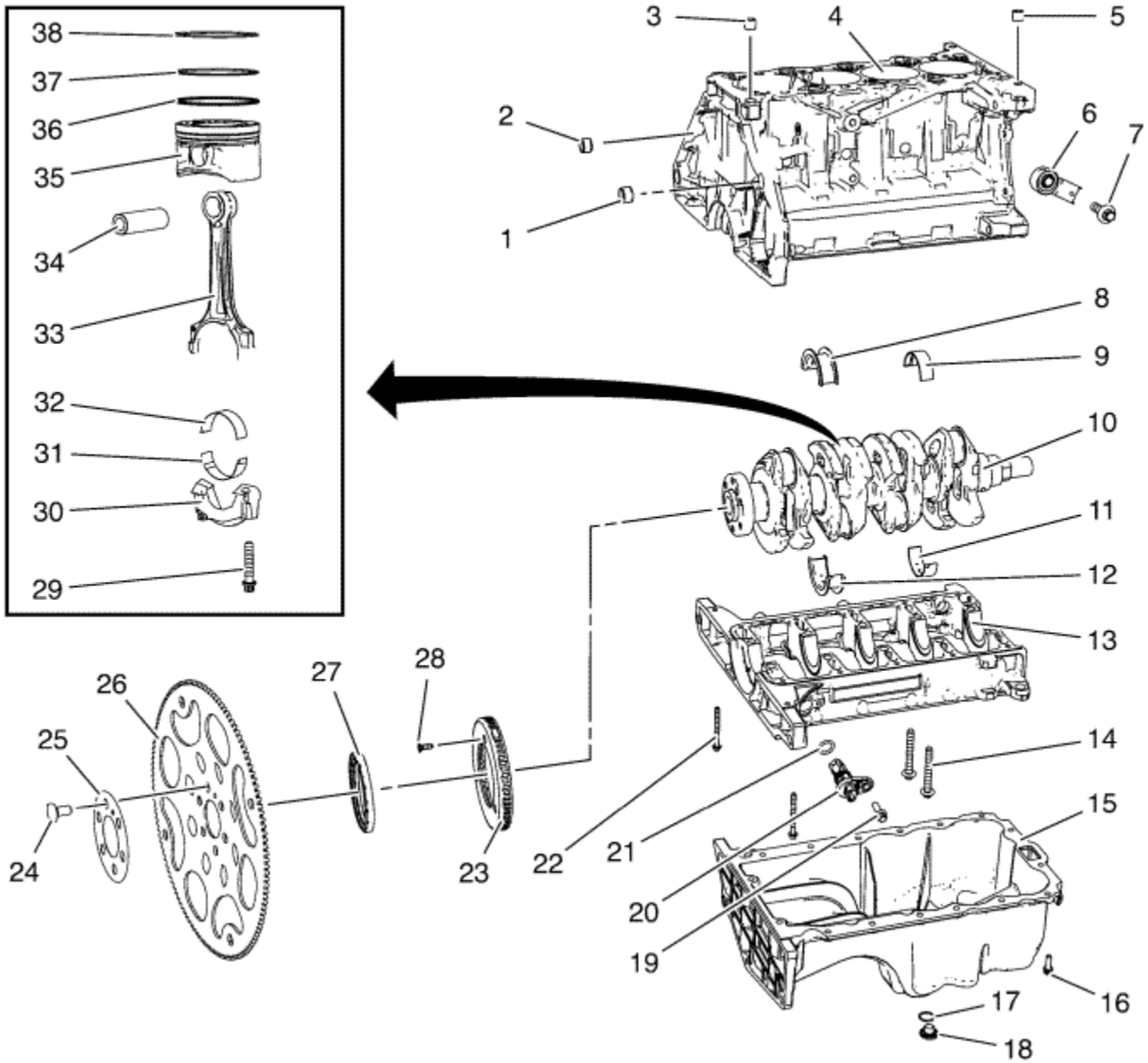

(1) Transmission Guide Sleeve
(2) Transmission Guide Sleeve
(3) Cylinder Head Guide Sleeve
(4) Engine Block
(5) Cylinder Head Guide Sleeve
(6) Knock Sensor

(7) Knock Sensor Bolt
(8) Upper Crankshaft Thrust Bearing
(9) Upper Crankshaft Bearing
(10) Crankshaft
(11) Lower Crankshaft Bearing
(12) Lower Crankshaft Thrust Bearing
(13) Crankshaft Bearing Cap Tie Plate
(14) Crankshaft Bearing Cap Tie Plate Bolt (M10)
(15) Sump
(16) Sump Bolt
(17) Oil Sump Drain Plug Seal Ring
(18) Sump Drain Plug
(19) Crankshaft Position Sensor Bolt
(20) Crankshaft Position Sensor
(21) Crankshaft Position Sensor Seal Ring
(22) Crankshaft Bearing Cap Tie Plate Bolt (M8)
(23) Crankshaft Position Sensor Reluctor Ring
(24) Flex Plate Bolt
(25) Flex Plate Bolt Washer
(26) Flex Plate
(27) Crankshaft Rear Oil Seal
(28) Crankshaft Position Sensor Reluctor Ring Bolt
(29) Big end bearing Cap Bolt
(30) Big end bearing Cap
(31) Big End Bearing
(32) Little End Bearing
(33) Connecting Rod
(34) Gudgeon pin
(35) Piston
(36) Piston Oil Ring (With Oil Ring Spacer)
(37) Lower Compression Ring
(38) Upper Compression Ring

© Copyright Chevrolet. All rights reserved

Power, Ground, Serial Data, and Blower Controls

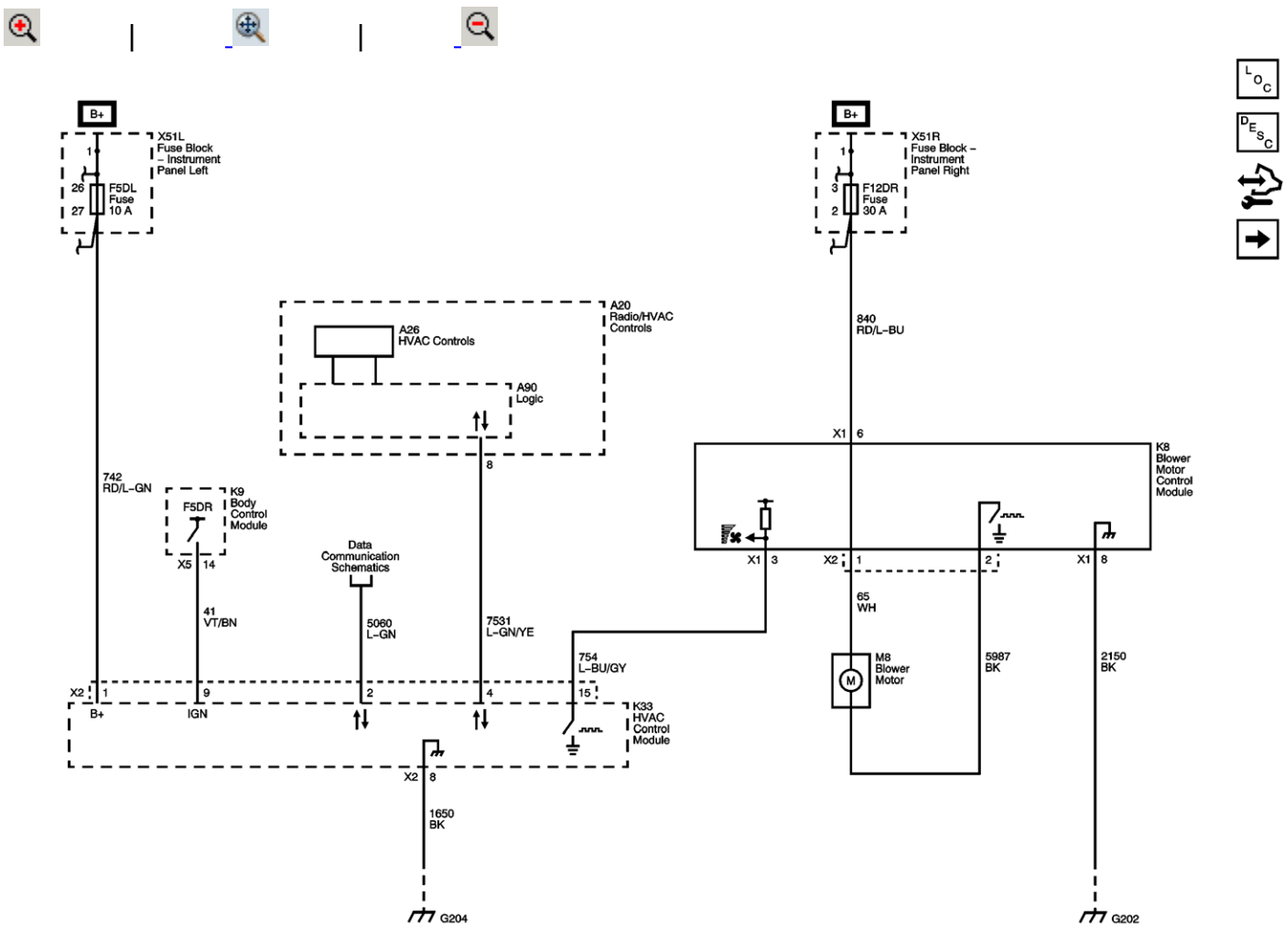

Master Electrical Component List

Automatic HVAC Description and Operation

Actuators

F1DL, F2DL, F3DL, F4DL, F5DL, F6DL, F7DL, F10DL, F11DL and F15DL Fuses

F4DR, F5DR, F6DR, F7DR, F8DR, F9DR, F10DR, F11DR and F12DR Fuses

Data Communication Schematics

G204

202

© Copyright Chevrolet. All rights reserved

Actuators

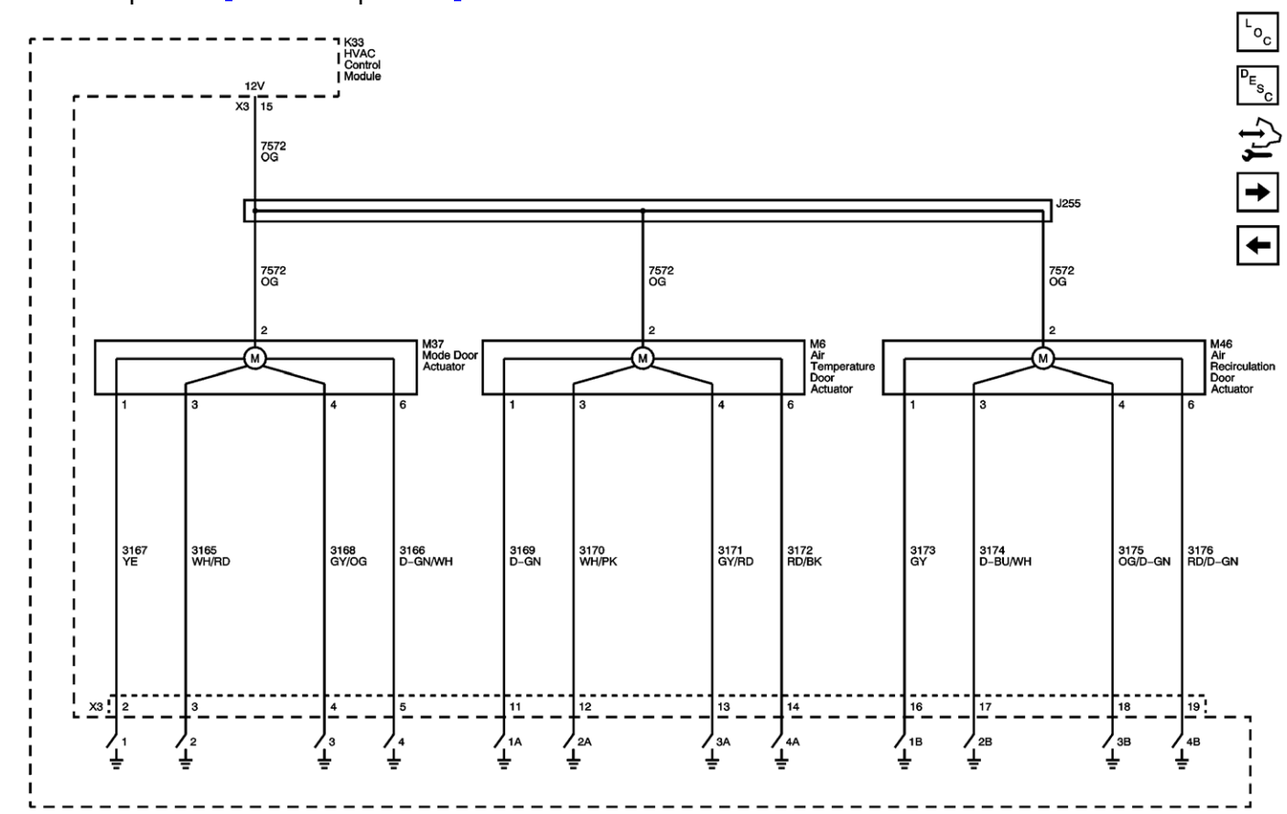
K33
HVAC
Control
Module
12V
X3 15
7572
OG
J255
7572
OG
7572
OG
7572
OG
2
2
2
M37
Mode Door
Actuator
M6
Air
Temperature
Door
Actuator
M46
Air
Recirculation
Door
Actuator
M
M
M
1
3
4
6
1
3
4
6
1
3
4
6
3167
YE
3165
WH/RD
3168
GY/OG
3166
D-GN/WH
3169
D-GN
3170
WH/PK
3171
GY/RD
3172
RD/BK
3173
GY
3174
D-BU/WH
3175
OG/D-GN
3176
RD/D-GN
X3
2
3
4
5
11
12
13
14
16
17
18
19
1
2
3
4
1A
2A
3A
4A
1B
2B
3B
4B

Master Electrical Component List

Automatic HVAC Description and Operation

Temperature Sensors

Power, Ground, Data Communication and Blower Controls

© Copyright Chevrolet. All rights reserved

Temperature Sensors

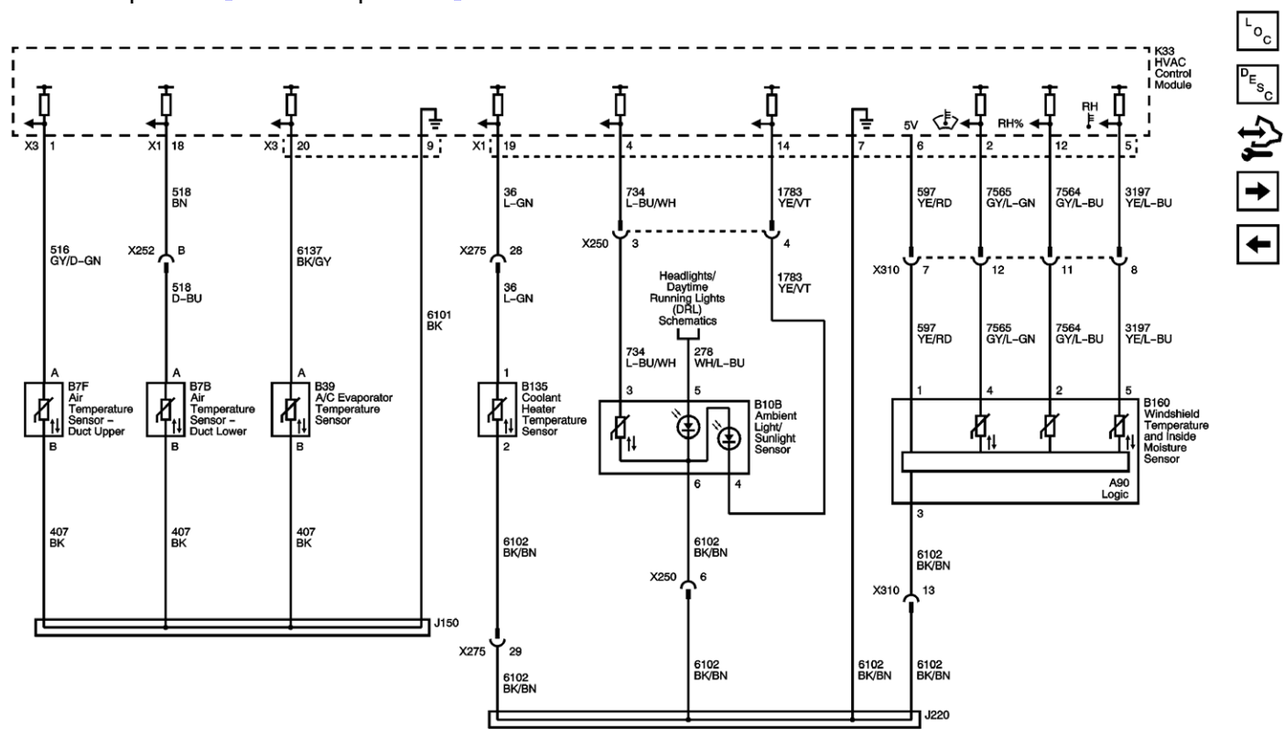

Master Electrical Component List

Automatic HVAC Description and Operation

Cabin Heater

Actuators

Daytime Running Lamps and Low Beams

© Copyright Chevrolet. All rights reserved

Cabin Heater

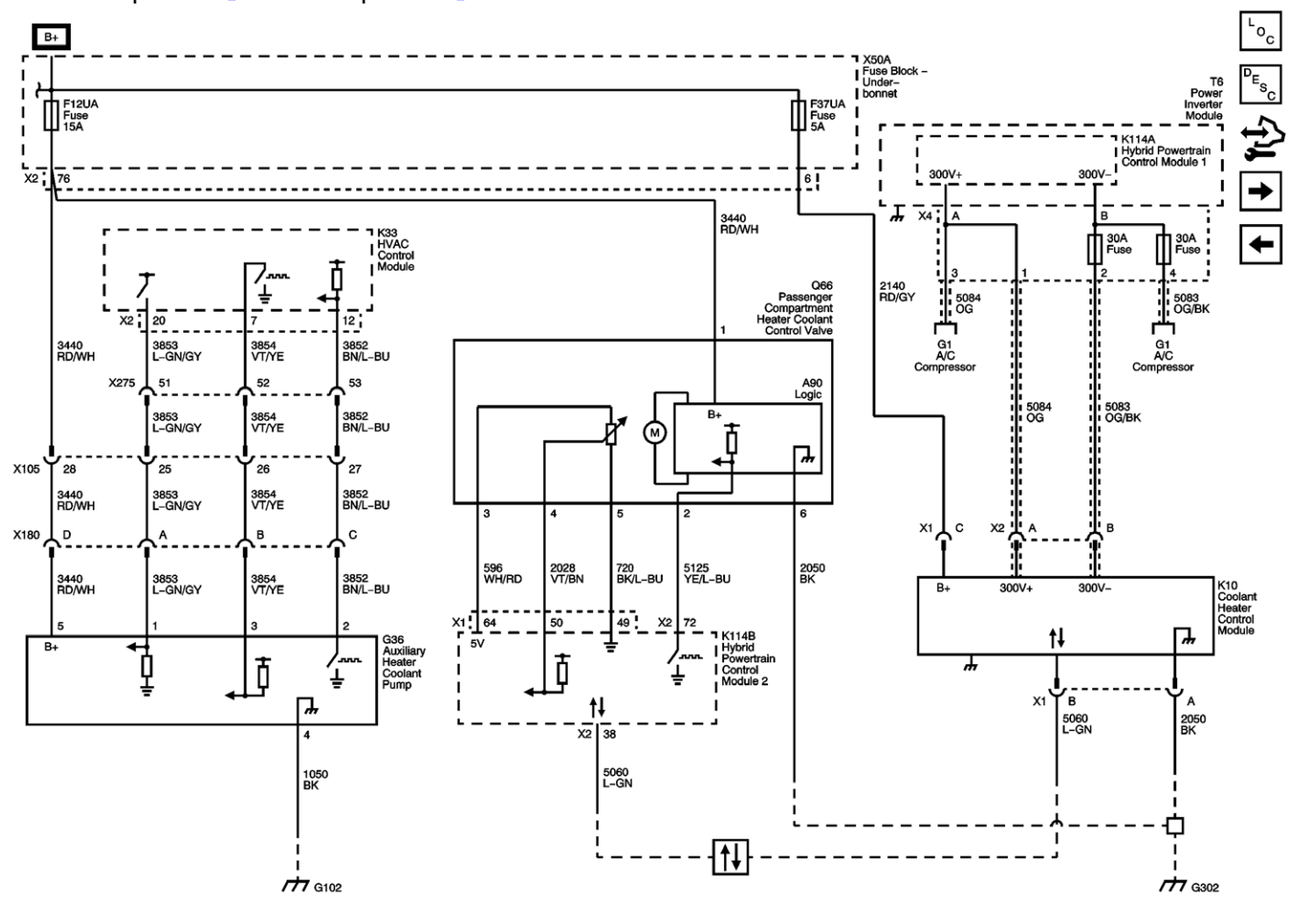

Master Electrical Component List

Automatic HVAC Description and Operation

Compressor Controls

Temperature Sensors

F10UA, F11UA, F12UA, F15UA, F17UA, F19UA and F39UA Fuses

F31UA, F35UA, F37UA, F42UA, F44UA and F48UA Fuses

Compressor Controls

Data Communication Schematics

G101 and G102

G302

© Copyright Chevrolet. All rights reserved

Compressor Controls

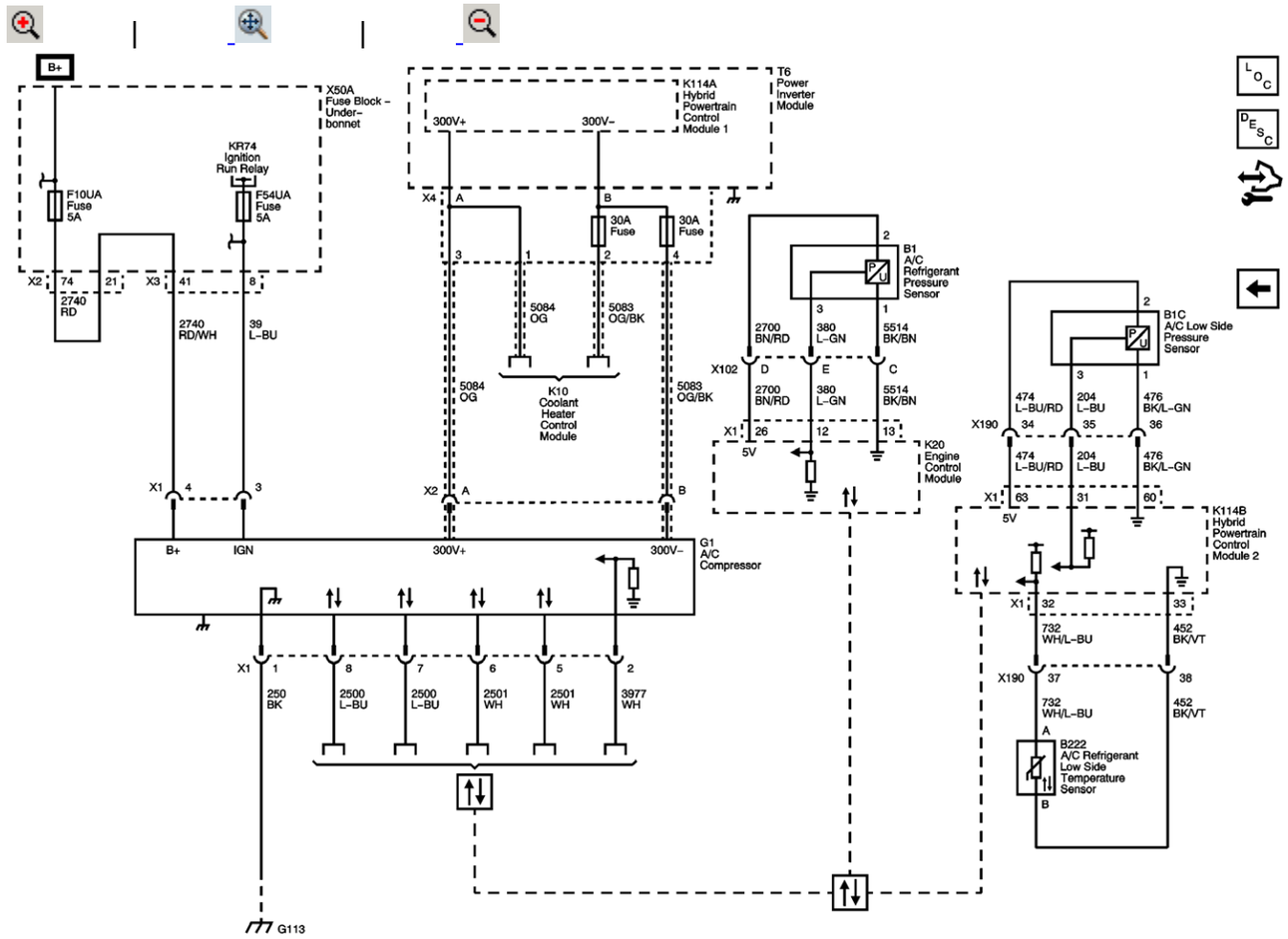

Master Electrical Component List

Automatic HVAC Description and Operation

Cabin Heater

F10UA, F11UA, F12UA, F15UA, F17UA, F19UA and F39UA Fuses

F32UA, F33UA, F50UA, F51UA, F52UA, F53UA and F54UA Fuses

Cabin Heater

Data Communication Schematics

G106, G109, G110, G112, G113 and G117

© Copyright Chevrolet. All rights reserved

Power, Earth and Data Communication

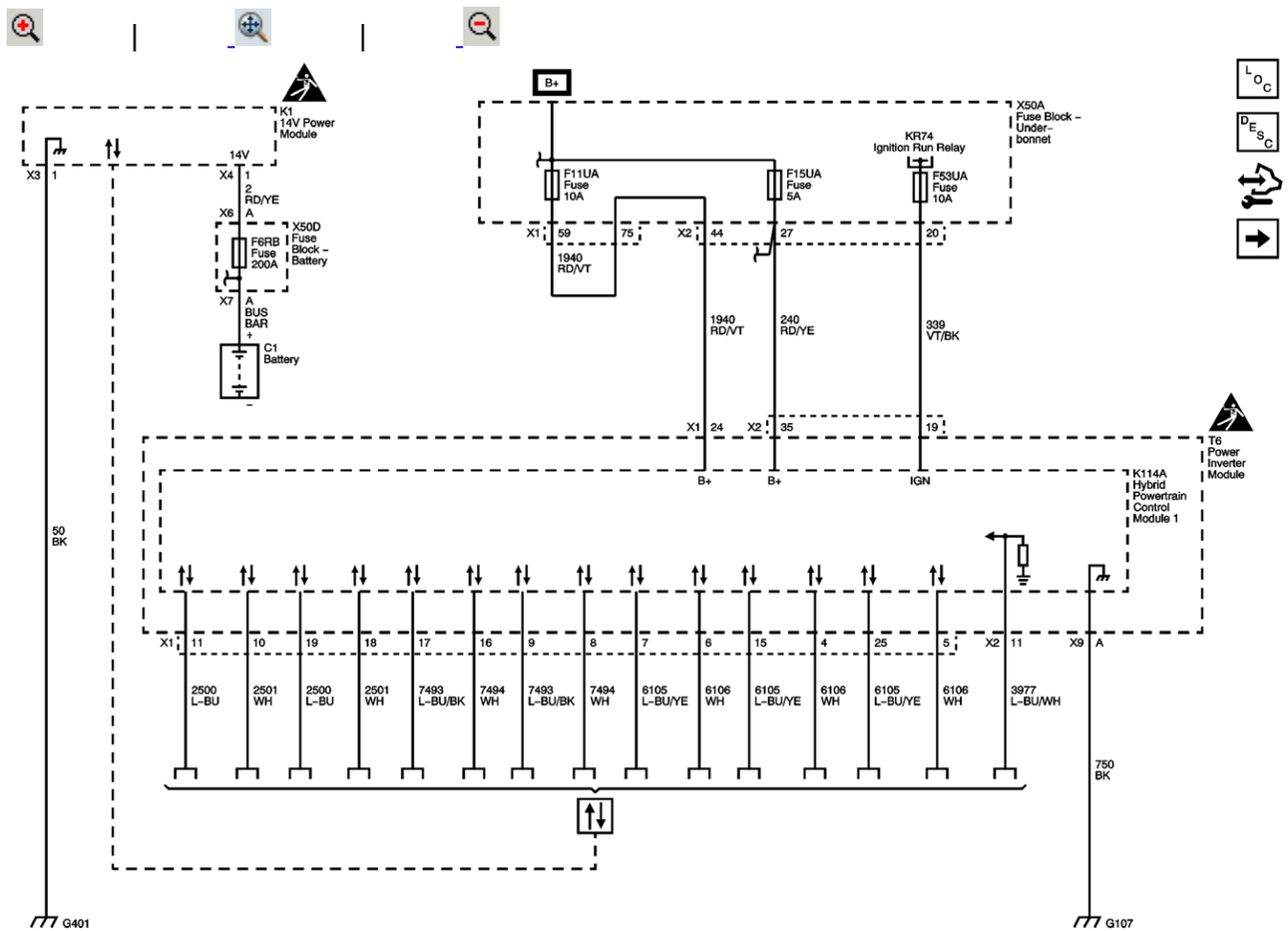

Master Electrical Component List

Drive Motor Generator Power Inverter Module Description and Operation

Drive Motors Monitoring

© Copyright Chevrolet. All rights reserved

Drive Motors Monitoring

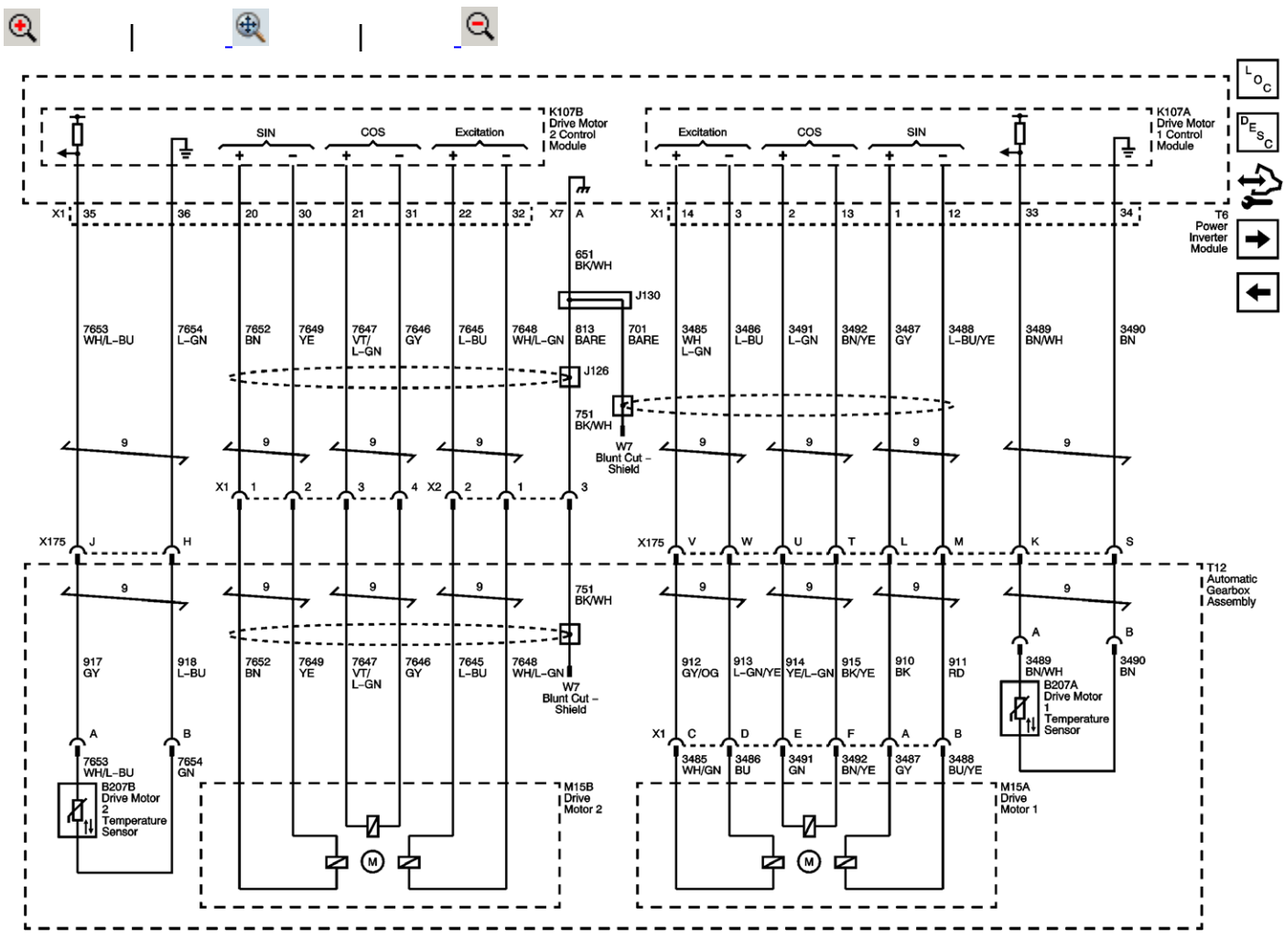

Master Electrical Component List

Drive Motor Generator Power Inverter Module Description and Operation

Transmission Internal Mode Switch

Power, Earth and Data Communication

Master Electrical Schematic Icons

© Copyright Chevrolet. All rights reserved

Transmission Internal Mode Switch

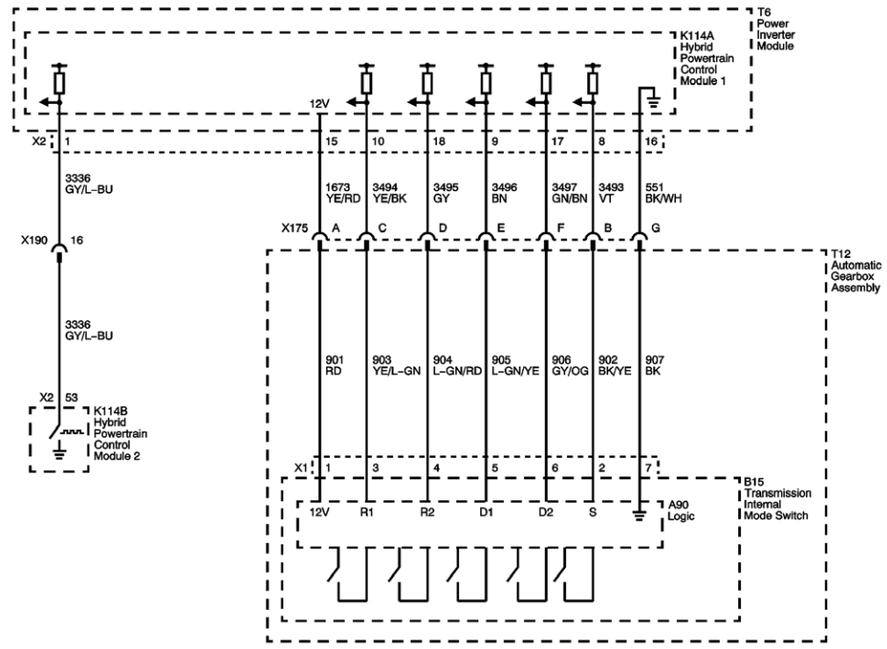

Master Electrical Component List

Drive Motor Generator Power Inverter Module Description and Operation

Drive Motors and Transmission Fluid Pump Controls

Drive Motors Monitoring

© Copyright Chevrolet. All rights reserved

Drive Motors and Transmission Fluid Pump Controls

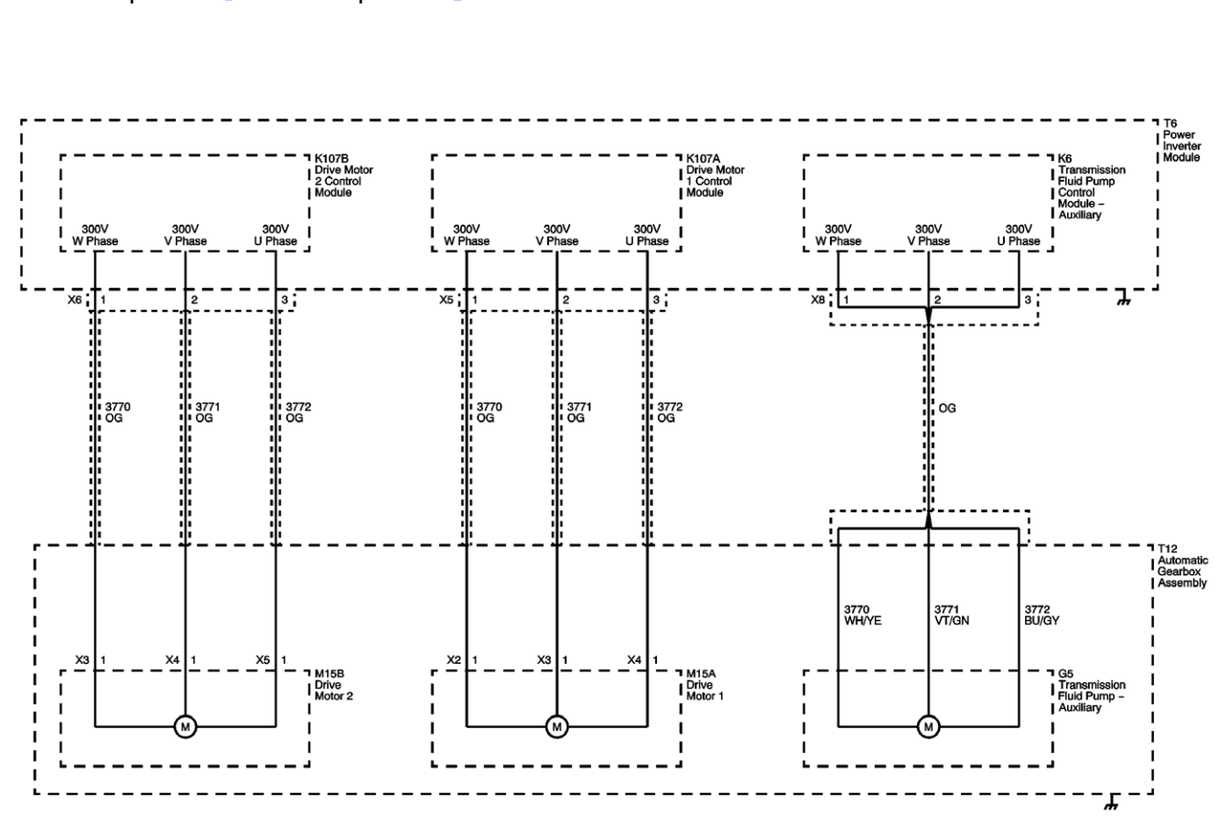

Master Electrical Component List

Drive Motor Generator Power Inverter Module Description and Operation

Transmission Internal Mode Switch

Master Electrical Schematic Icons

© Copyright Chevrolet. All rights reserved

Hybrid Control Electronic Component Views

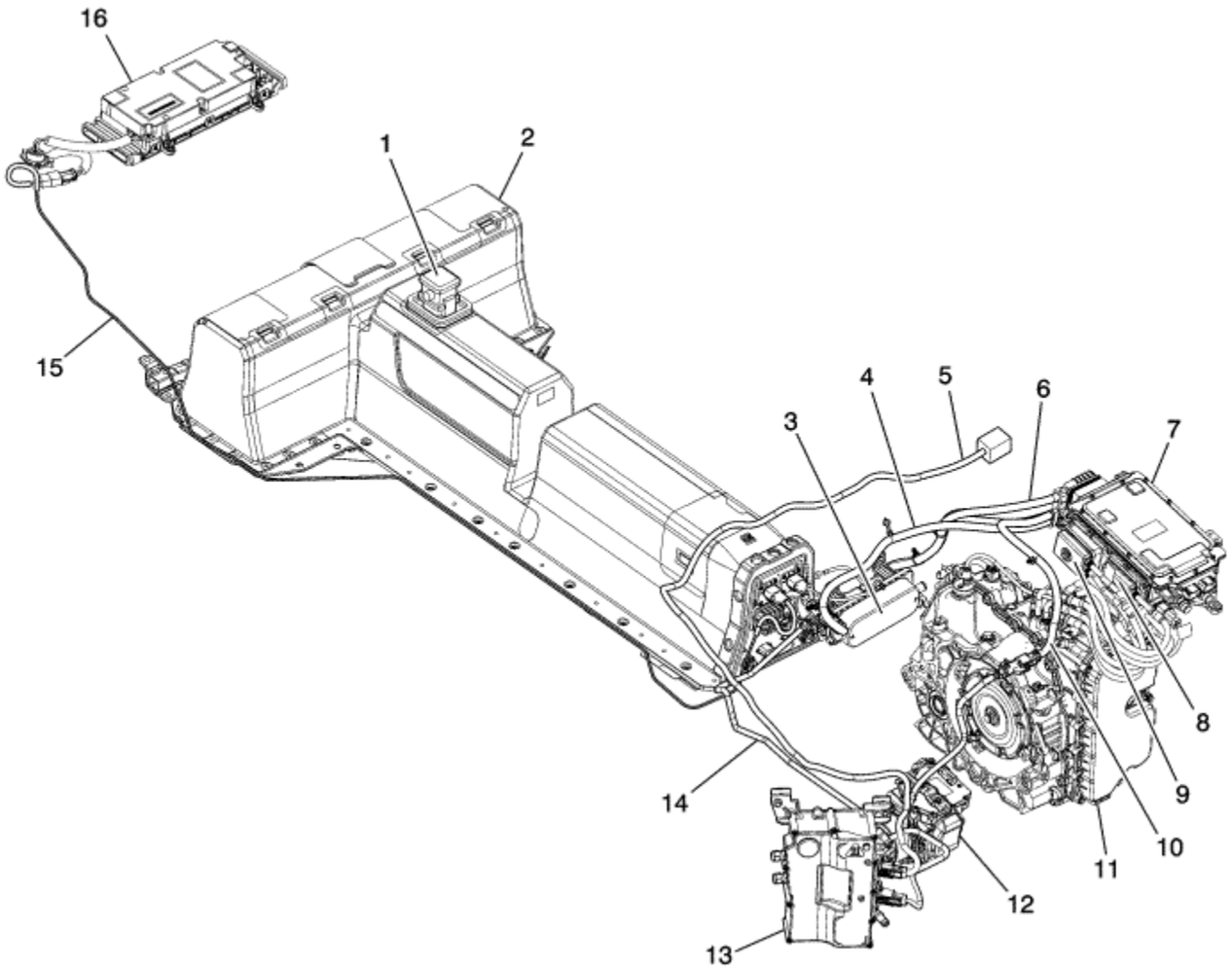

(1) Drive Motor Battery High Voltage Manual Disconnect Lever
(2) Drive Motor Battery Assembly
(3) Heater Coolant Heater
(4) Battery Positive and Negative (300 V) Cable Assembly - Inverter to Coolant Heater
(5) Battery Positive and Negative (300 V) Cable Assembly - Charger to Charge Receptacle
(6) Battery Positive and Negative (300 V) Cable Assembly - Inverter to Drive Motor Battery
(7) Drive Motor Power Inverter Module Assembly
(8) Drive Motor Power Inverter Module 3-Phase Cable Assembly - B
(9) Drive Motor Power Inverter Module 3-Phase Cable Assembly - A
(10) Battery Positive and Negative (300 V) Cable Assembly - Inverter to Cooling Compressor
(11) Automatic Transmission
(12) AC and Drive Motor Battery Cooling Compressor Assembly
(13) Drive Motor Battery Charger Assembly
(14) Battery Positive and Negative (300 V) Cable Assembly - Drive Motor Battery to Charger
(15) Battery Positive and Negative (300 V) Cable Assembly - Drive Motor Battery to APM Module
(16) Accessory DC Power Control Module Assembly

© Copyright Chevrolet. All rights reserved

High-Voltage Ring Terminal Locator

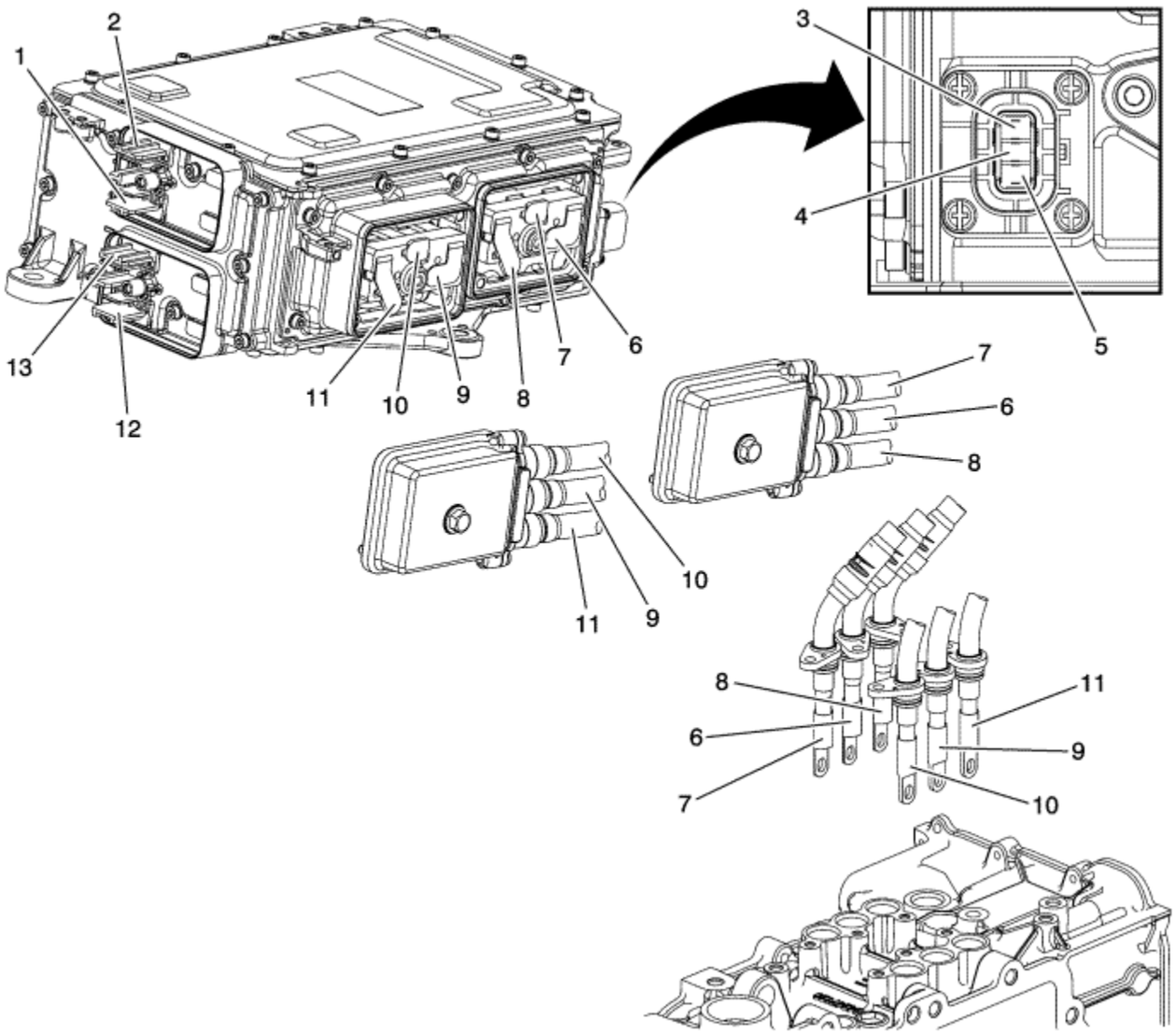

(1) Drive Motor Generator Battery 300 V B-
(2) Drive Motor Generator Battery 300 V B+
(3) Motor 3-Phase U
(4) Motor 3-Phase V
(5) Motor 3-Phase W
(6) Motor 2-Phase V
(7) Motor 2-Phase U
(8) Motor 2-Phase W
(9) Motor 1-Phase V
(10) Motor 1-Phase U
(11) Motor 1-Phase W
(12) Cabin Conditioning 300 V B+
(13) Cabin Conditioning 300 V B-

© Copyright Chevrolet. All rights reserved

Hybrid Electronics Cooling

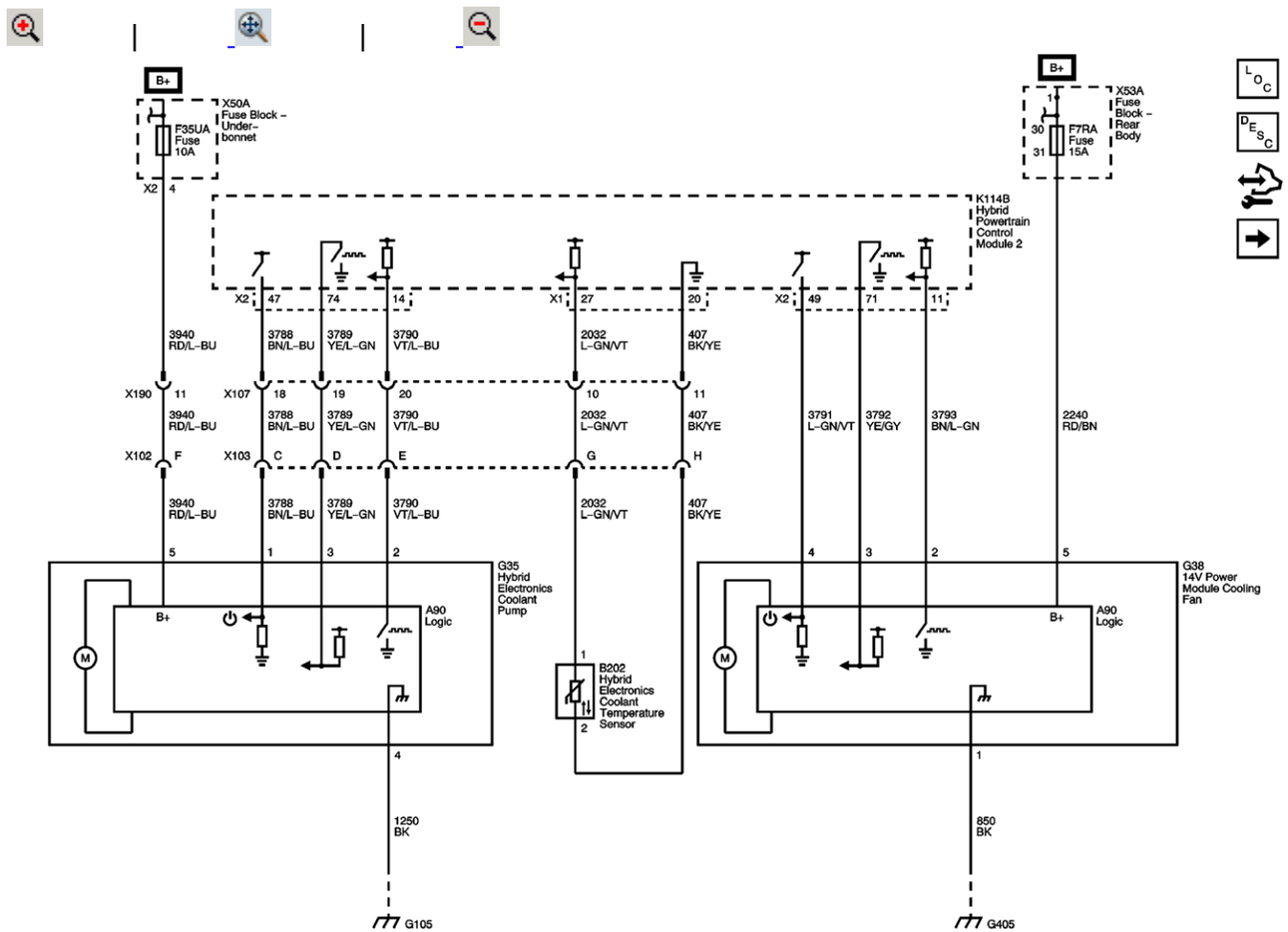

Master Electrical Component List

Hybrid Cooling System Description and Operation

Hybrid/EV Battery Pack Cooling

© Copyright Chevrolet. All rights reserved

Hybrid Battery Pack Cooling

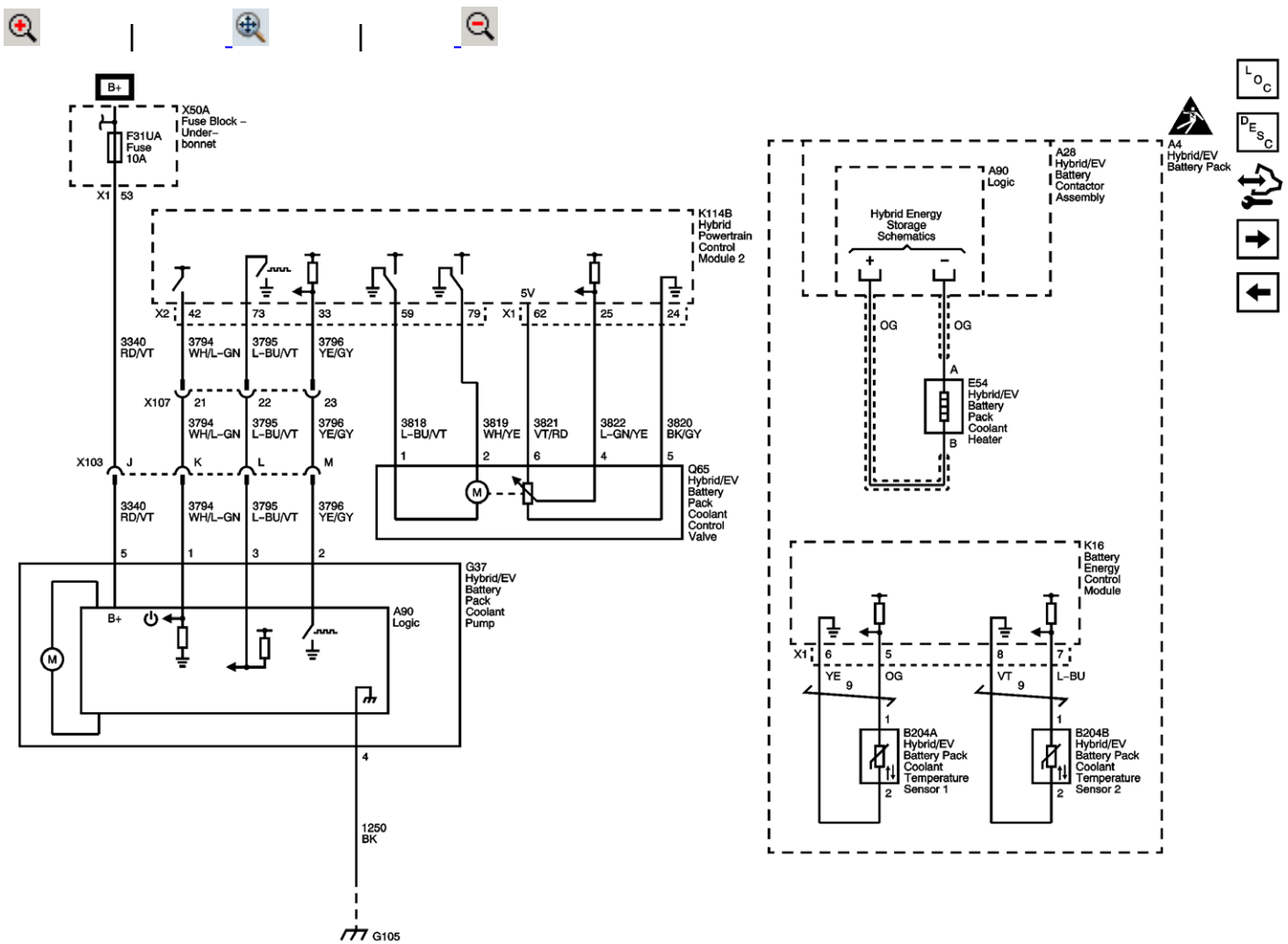

Master Electrical Component List

Hybrid Cooling System Description and Operation

Hybrid/EV Battery Modules - Temperature Sensors 1 through to 7

Hybrid/EV Electronics Cooling

© Copyright Chevrolet. All rights reserved

Hybrid Battery Modules - Temperature Sensors 1 through to 7

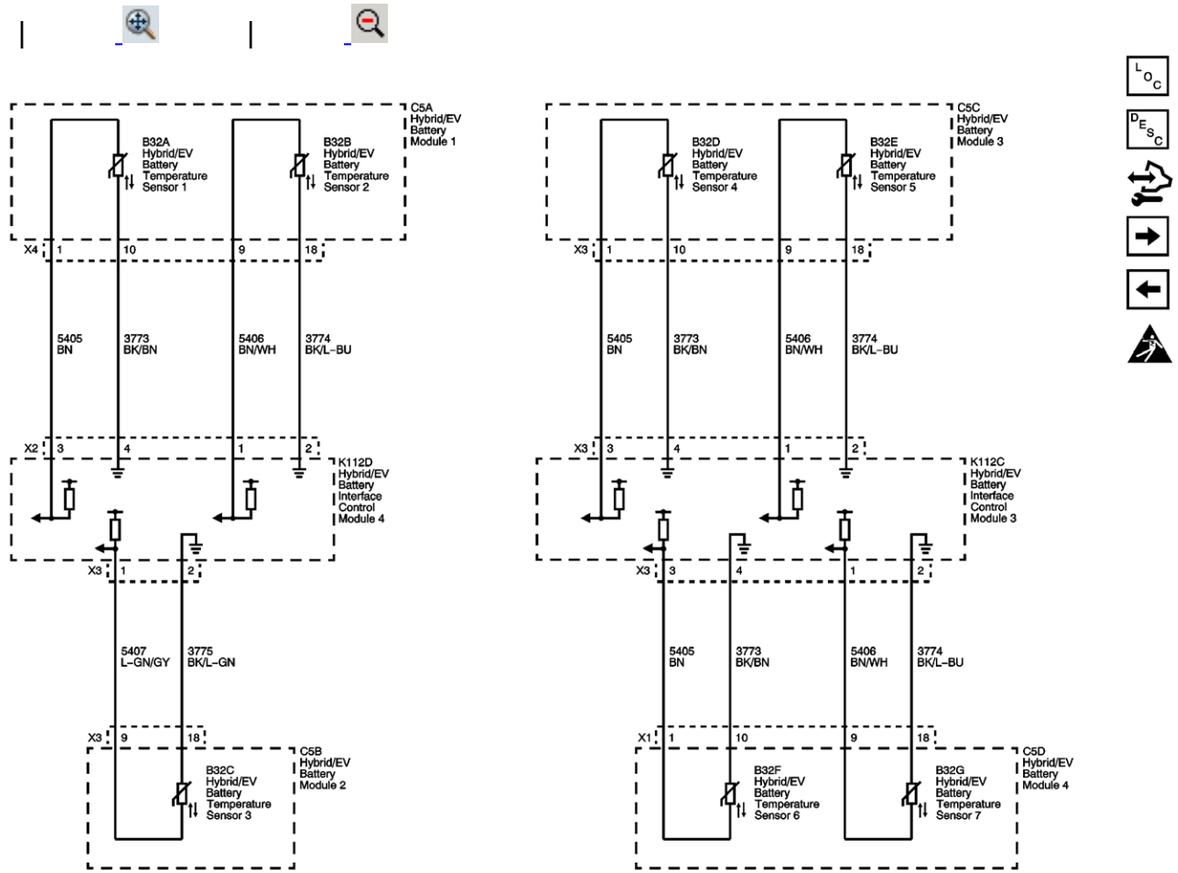

Master Electrical Component List

Hybrid Cooling System Description and Operation

Hybrid/EV Battery Modules - Temperature Sensors 8 through to 16

Hybrid/EV Battery Pack Cooling

© Copyright Chevrolet. All rights reserved

Hybrid Battery Modules - Temperature Sensors 8 through to 16

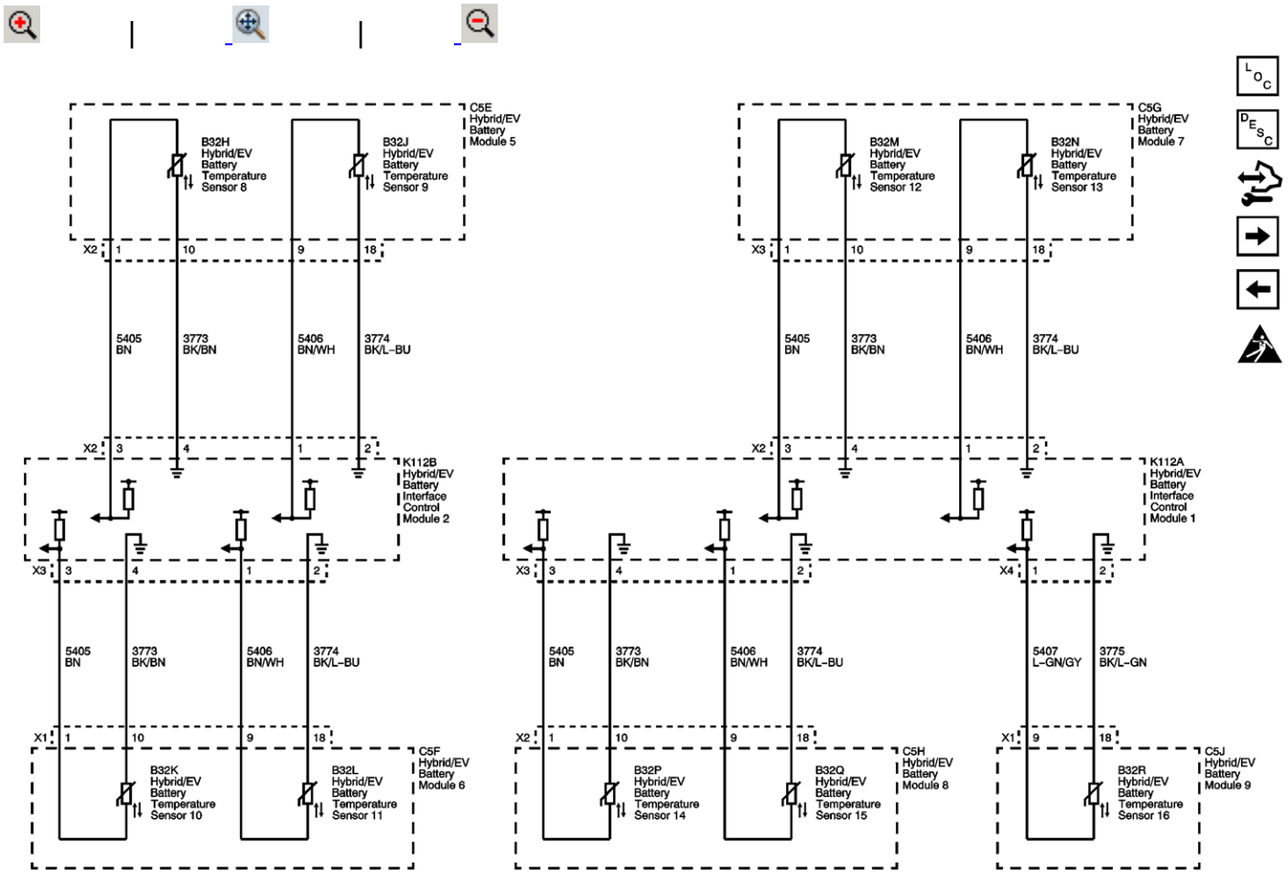

Master Electrical Component List

Hybrid Cooling System Description and Operation

Hybrid/EV Battery Modules - Temperature Sensors 1 through to 7

© Copyright Chevrolet. All rights reserved

Battery Energy Control Module Power, Earth and Data Communication

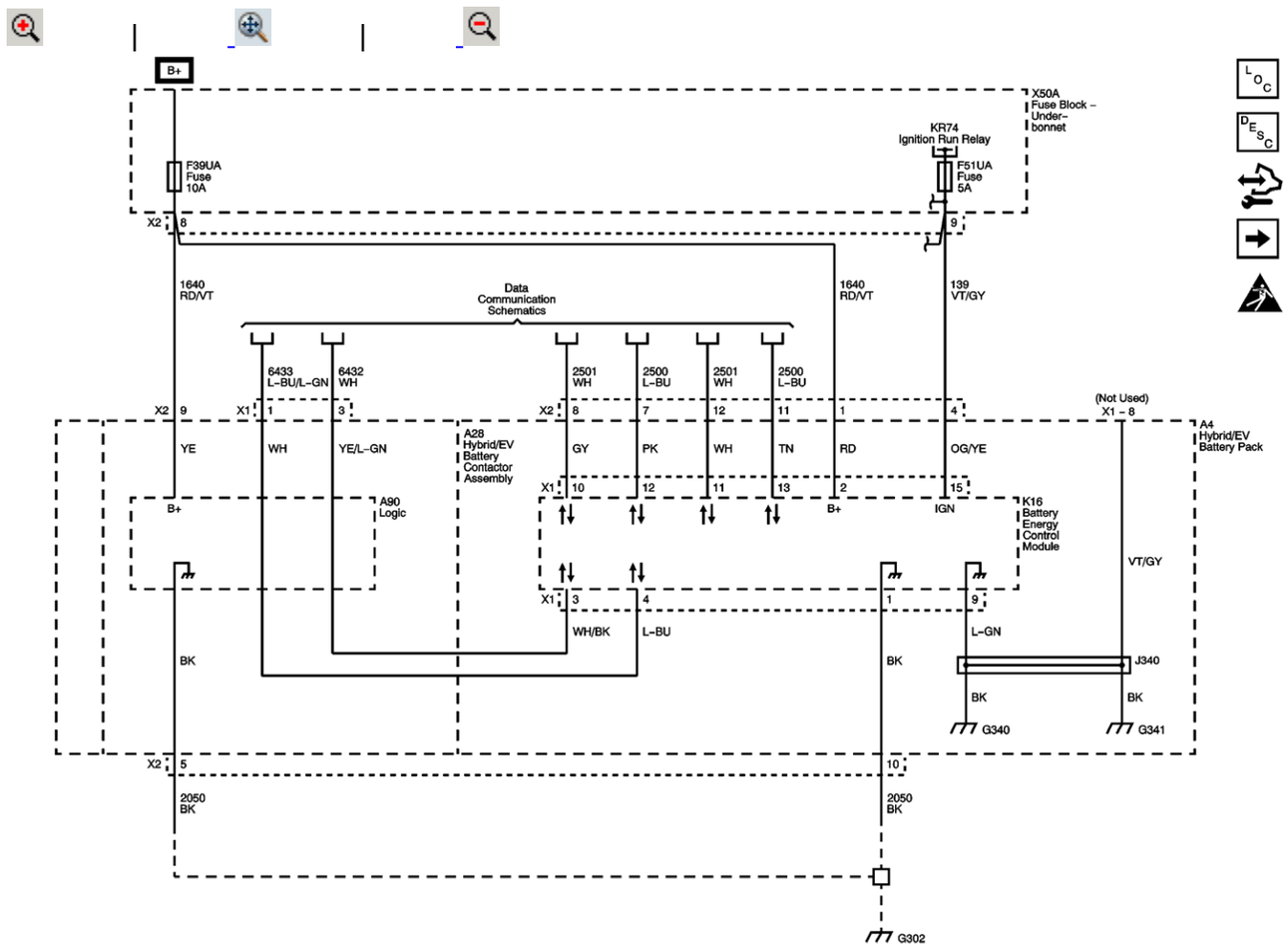

Master Electrical Component List

Drive Motor Battery System Description

Internal Battery Communication

© Copyright Chevrolet. All rights reserved

Internal Battery Communication

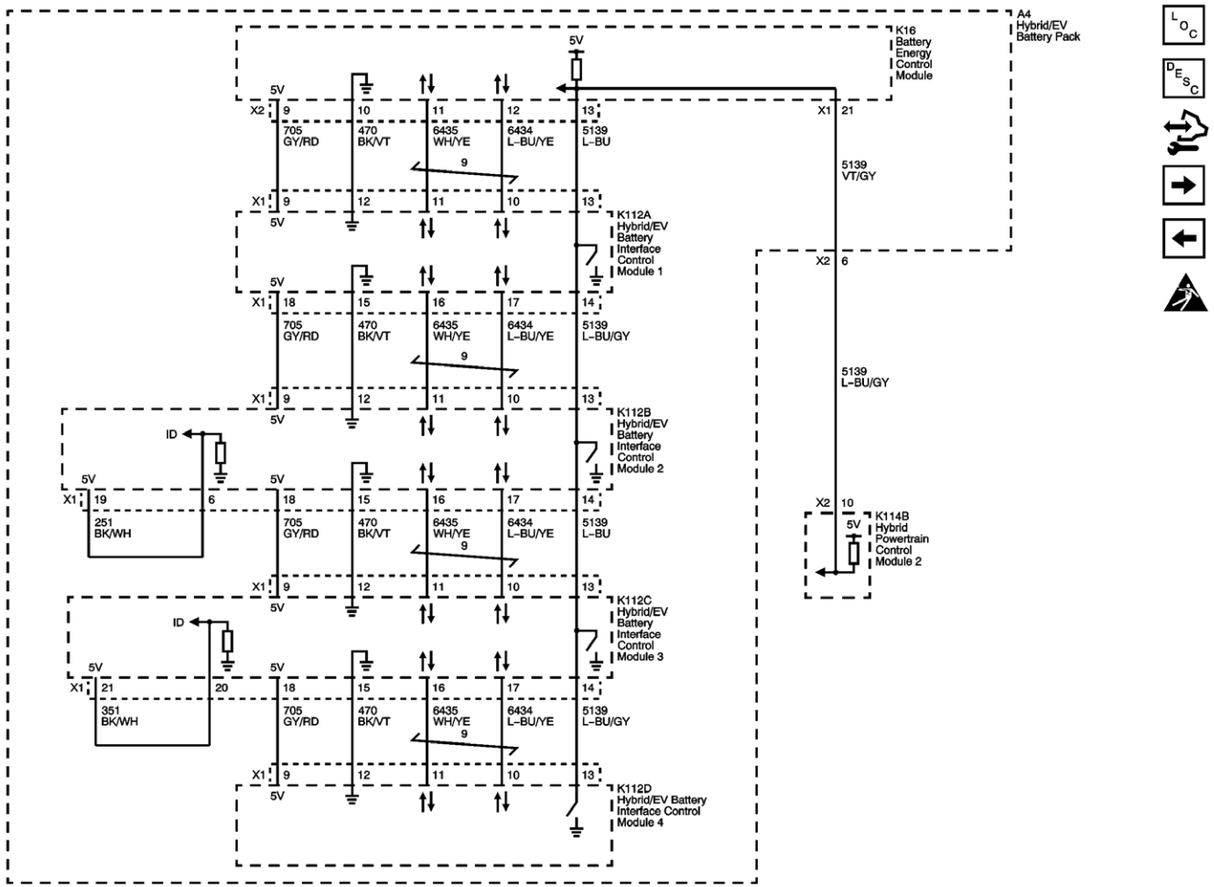

Master Electrical Component List

Drive Motor Battery System Description

High-Voltage Interlock Loop - Main

Battery Energy Control Module Power, Earth and Data Communication

© Copyright Chevrolet. All rights reserved

High-Voltage Interlock Loop - Main

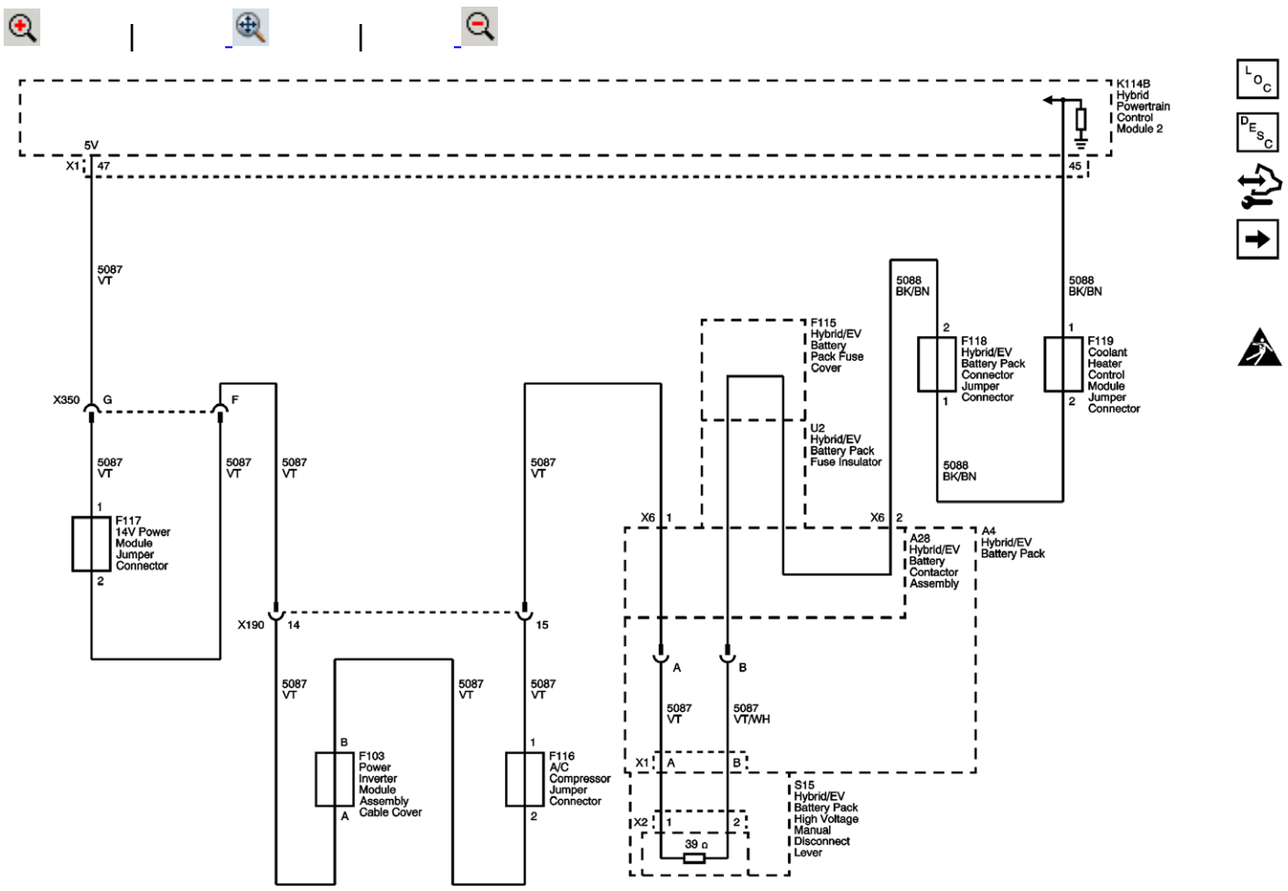

Master Electrical Component List

Drive Motor Battery System Description

High-Voltage Interlock Loop - Charging

Internal Battery Communication

© Copyright Chevrolet. All rights reserved

High-Voltage Interlock Loop - Charging

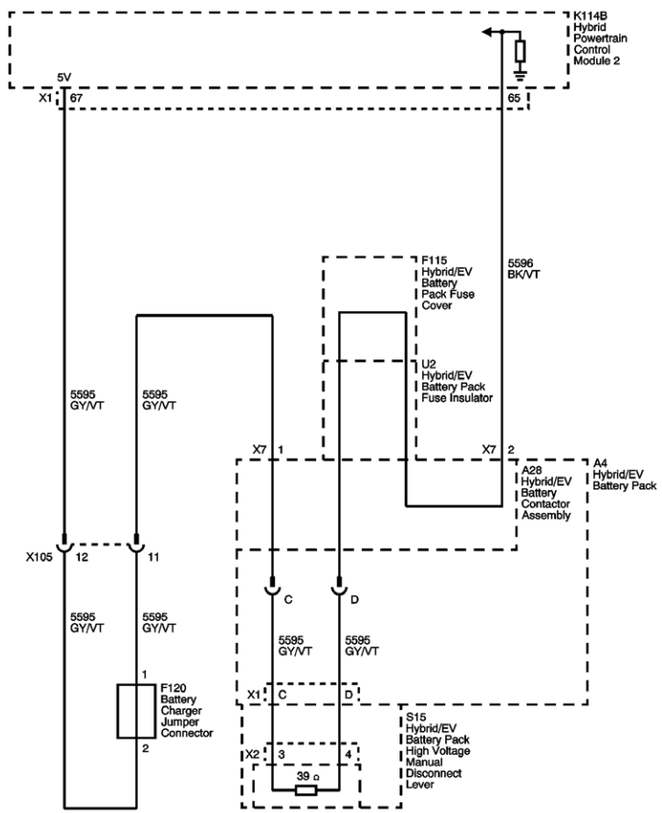

Master Electrical Component List

Drive Motor Battery System Description

High-Voltage Contactors - Control

High-Voltage Interlock Loop - Main

© Copyright Chevrolet. All rights reserved

High-Voltage Contactors - Control

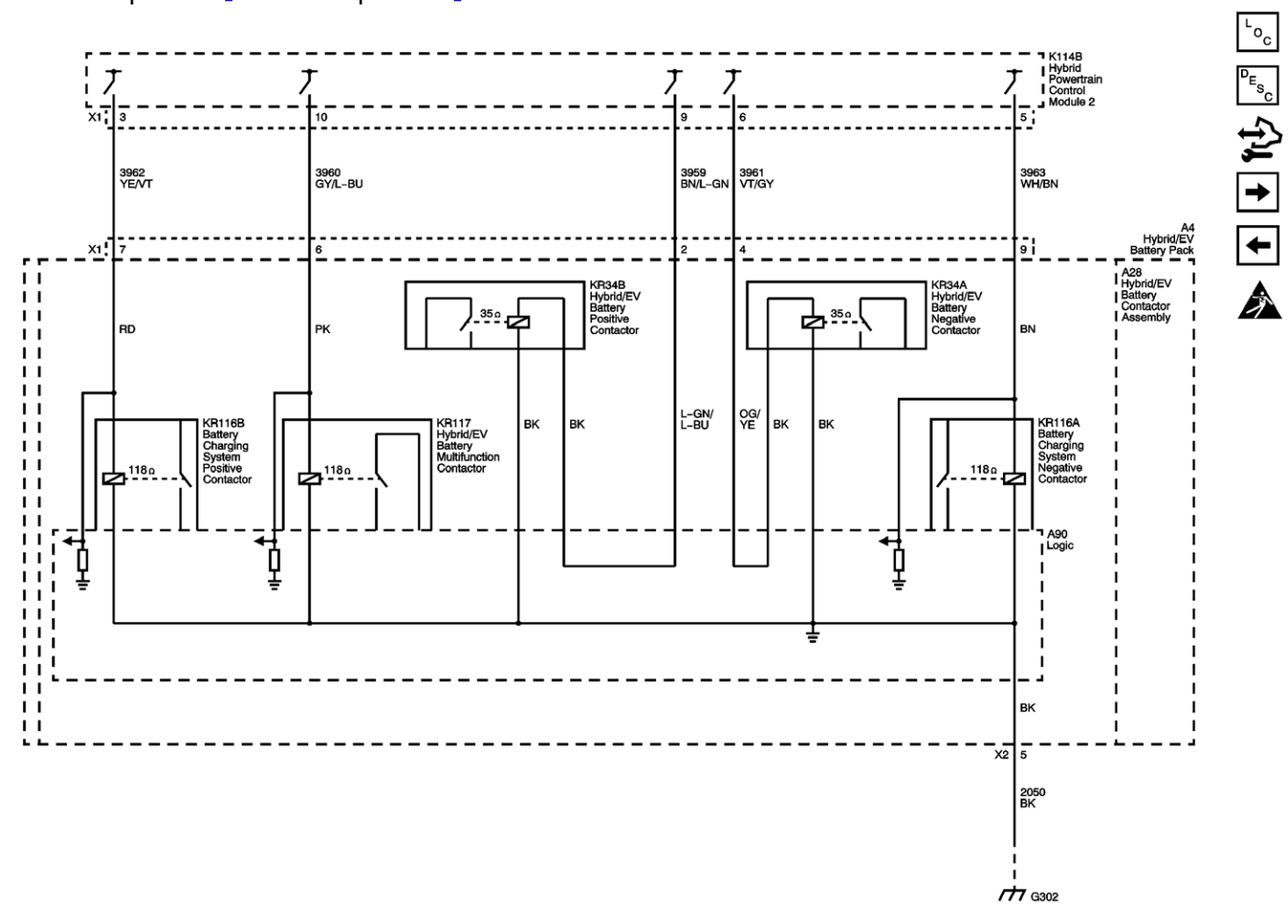

Master Electrical Component List

Drive Motor Battery System Description

High-Voltage Contactors - High Voltage Positive

High-Voltage Interlock Loop - Charging

© Copyright Chevrolet. All rights reserved

High-Voltage Contactors - High Voltage Positive

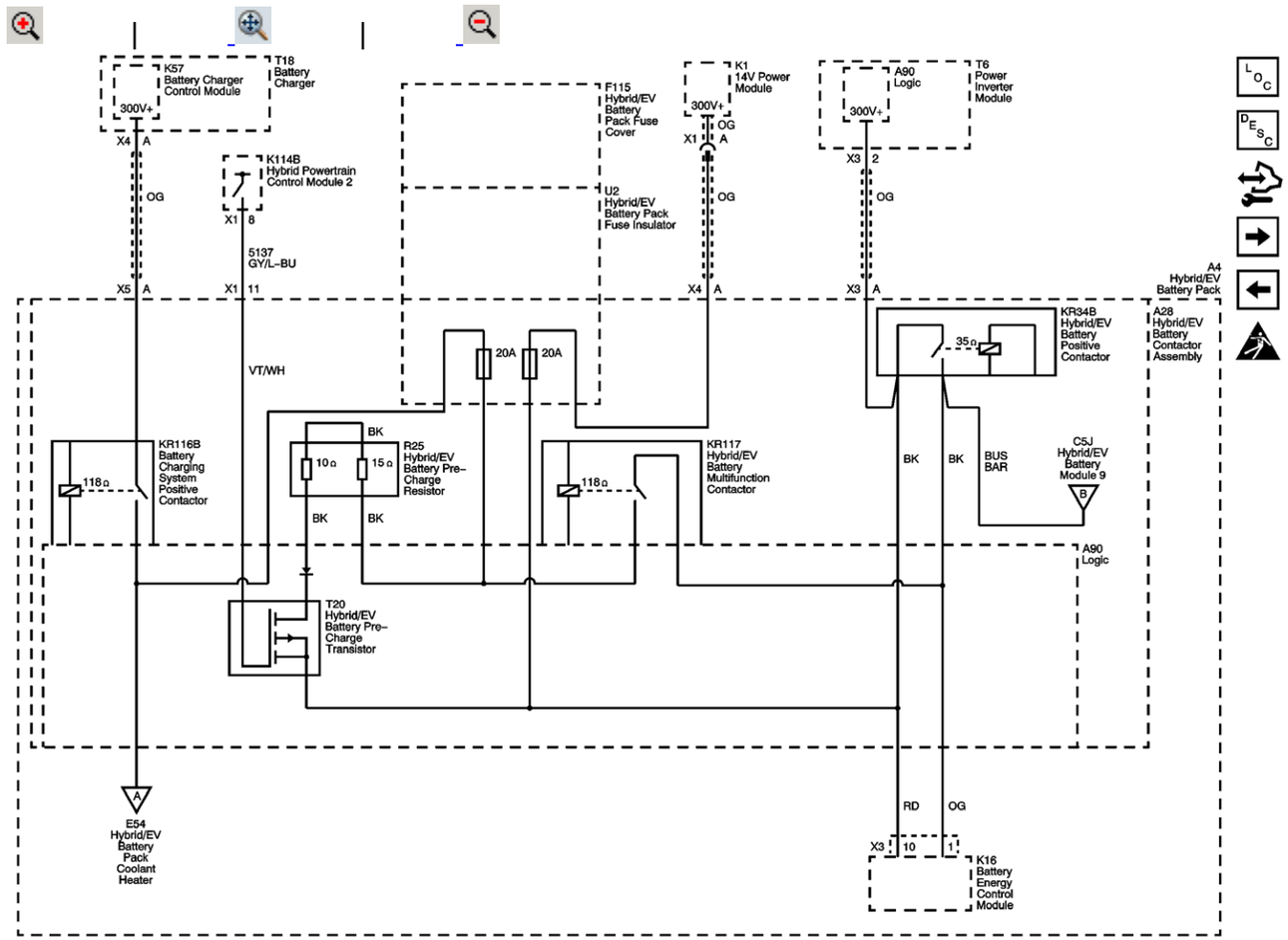

Master Electrical Component List

Drive Motor Battery System Description

Hybrid/EV Battery Section 1

High-Voltage Contactors - Control

© Copyright Chevrolet. All rights reserved

Hybrid Battery Section 1

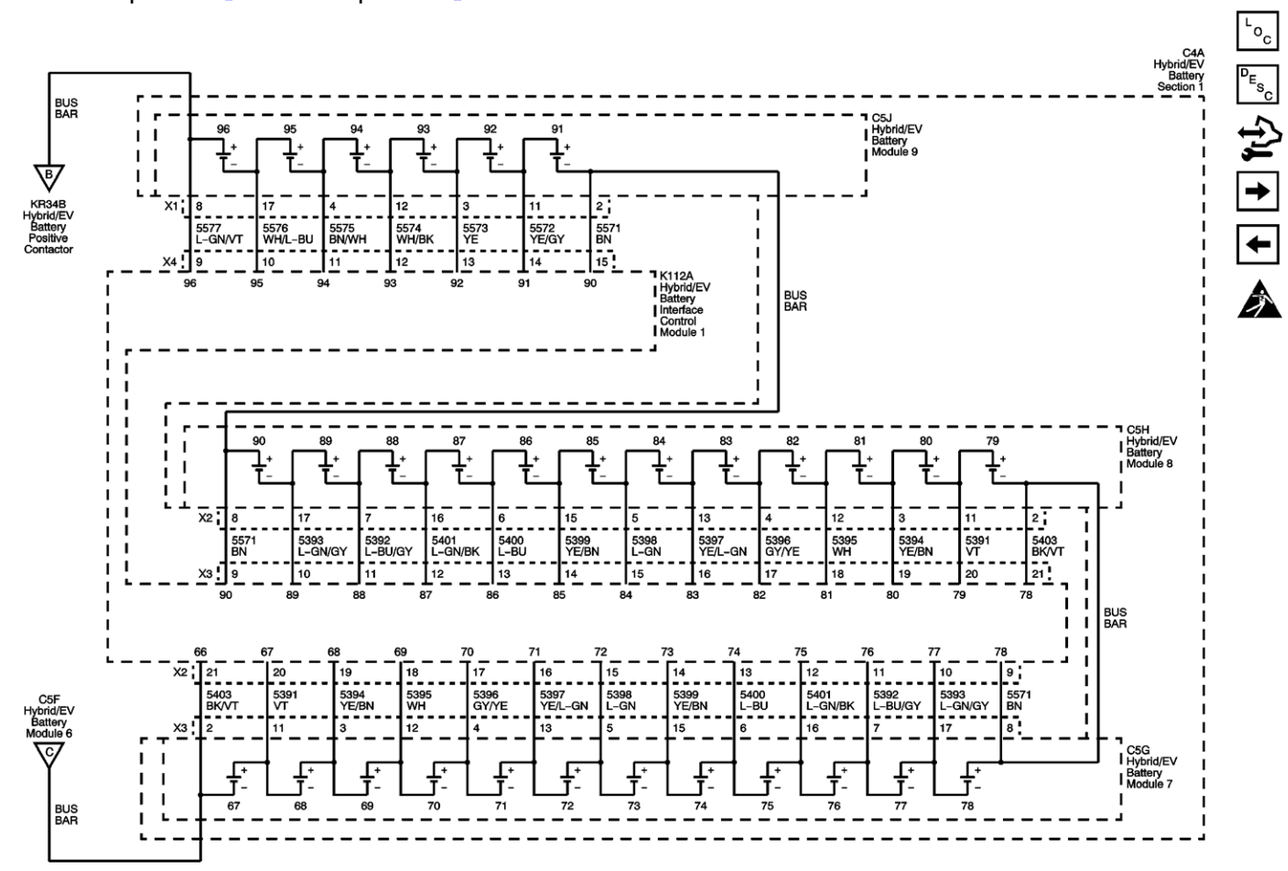

Master Electrical Component List

Drive Motor Battery System Description

Hybrid/EV Battery Section 2

High-Voltage Contactors - High Voltage Positive

© Copyright Chevrolet. All rights reserved

Hybrid Battery Section 2

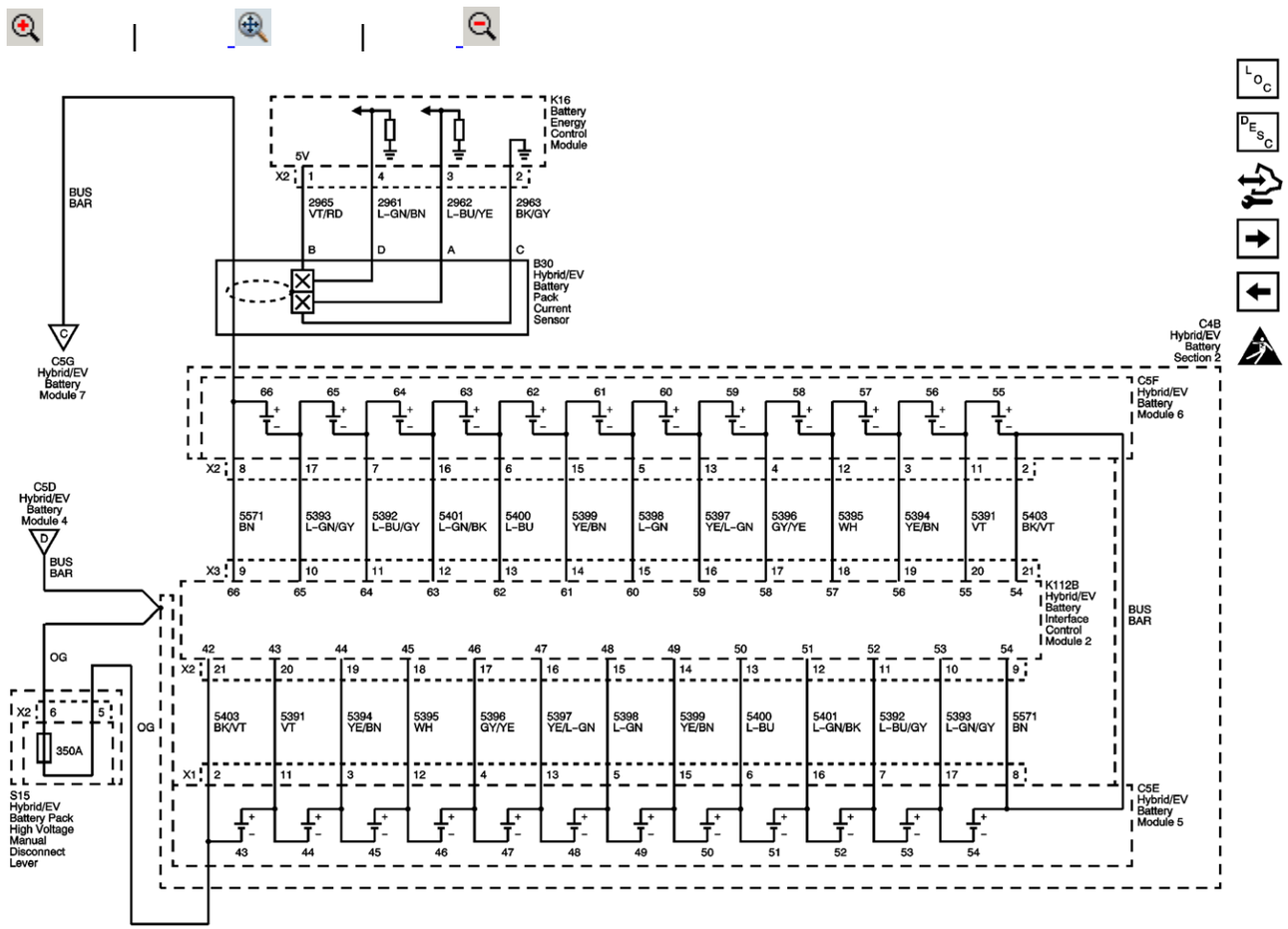

Master Electrical Component List

Drive Motor Battery System Description

Hybrid/EV Battery Section 3

Hybrid/EV Battery Section 1

© Copyright Chevrolet. All rights reserved

Hybrid Battery Section 3

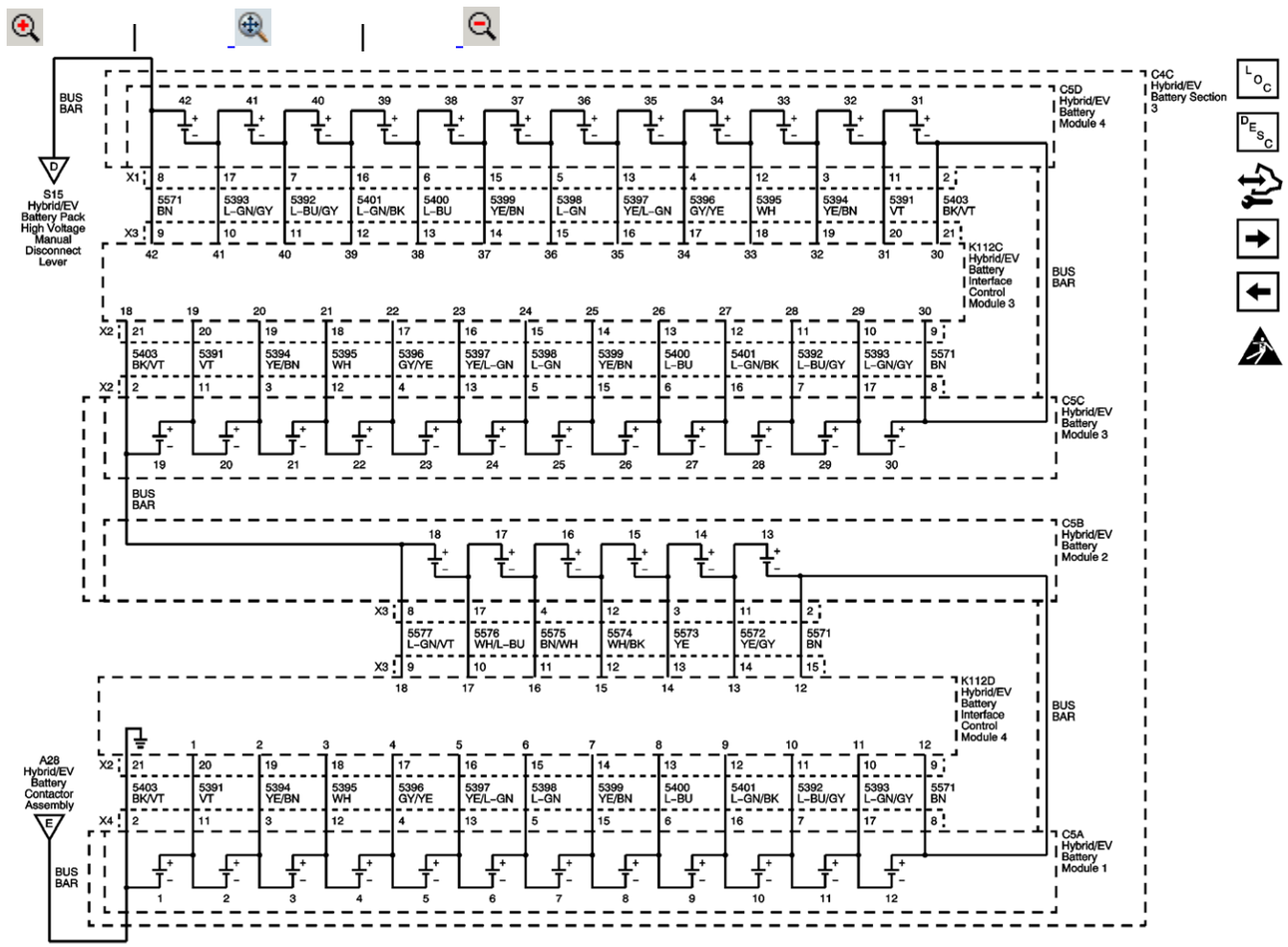

Master Electrical Component List

Drive Motor Battery System Description

High-Voltage Contactors - High Voltage Negative

Hybrid/EV Battery Section 2

© Copyright Chevrolet. All rights reserved

High-Voltage Contactors - High Voltage Negative

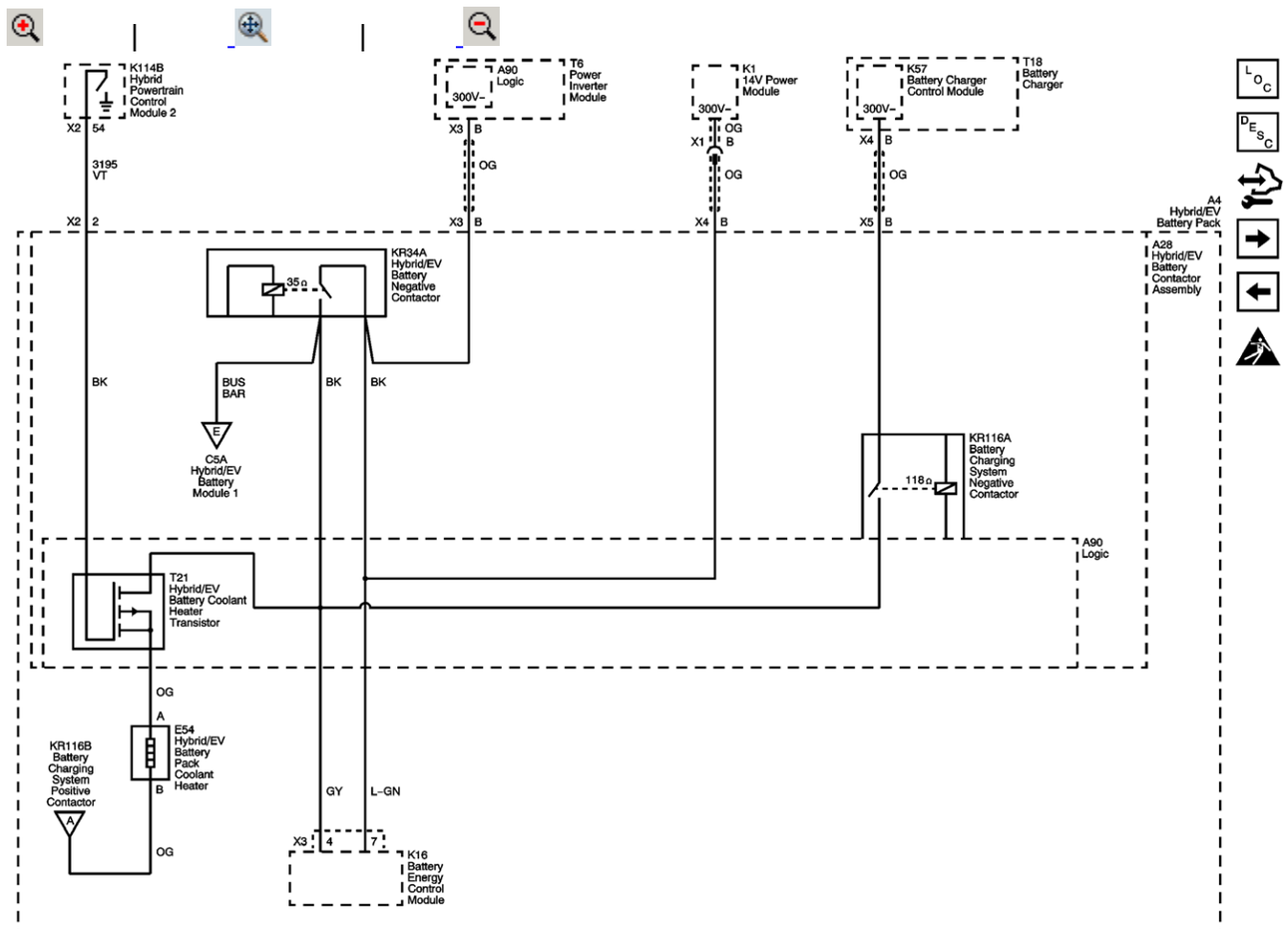

Master Electrical Component List

Drive Motor Battery System Description

Hybrid/EV Battery Section 3

© Copyright Chevrolet. All rights reserved

Charging Port Door

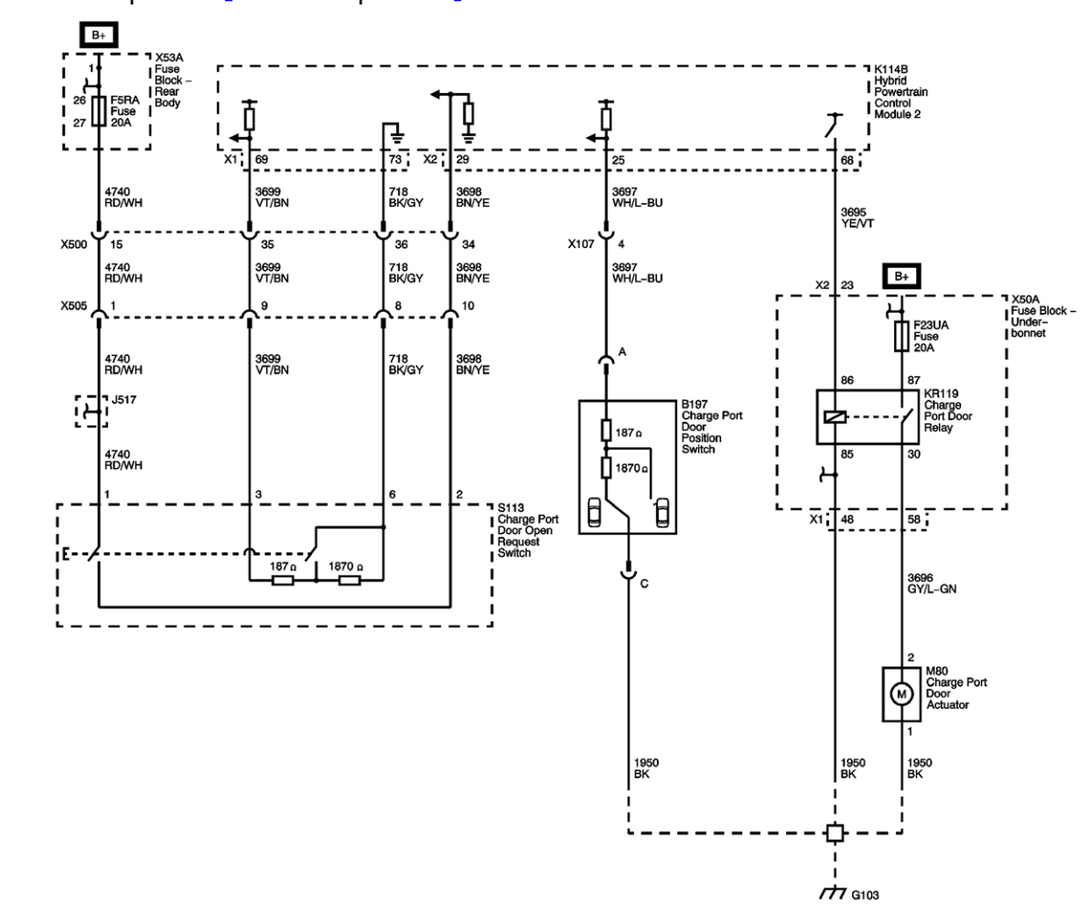

Master Electrical Component List

Plug-In Charging System Description and Operation

Battery Charger

F2RA, F3RA, F4RA, F5RA, F7RA, F8RA, F10RA, F12RA and F13RA Fuses

F6UA, F9UA, F22UA, F23UA, F40UA, F41UA and F43UA Fuses

F2RA, F3RA, F4RA, F5RA, F7RA, F8RA, F10RA, F12RA and F13RA Fuses

G103, G104 and G105

© Copyright Chevrolet. All rights reserved

Battery Charger

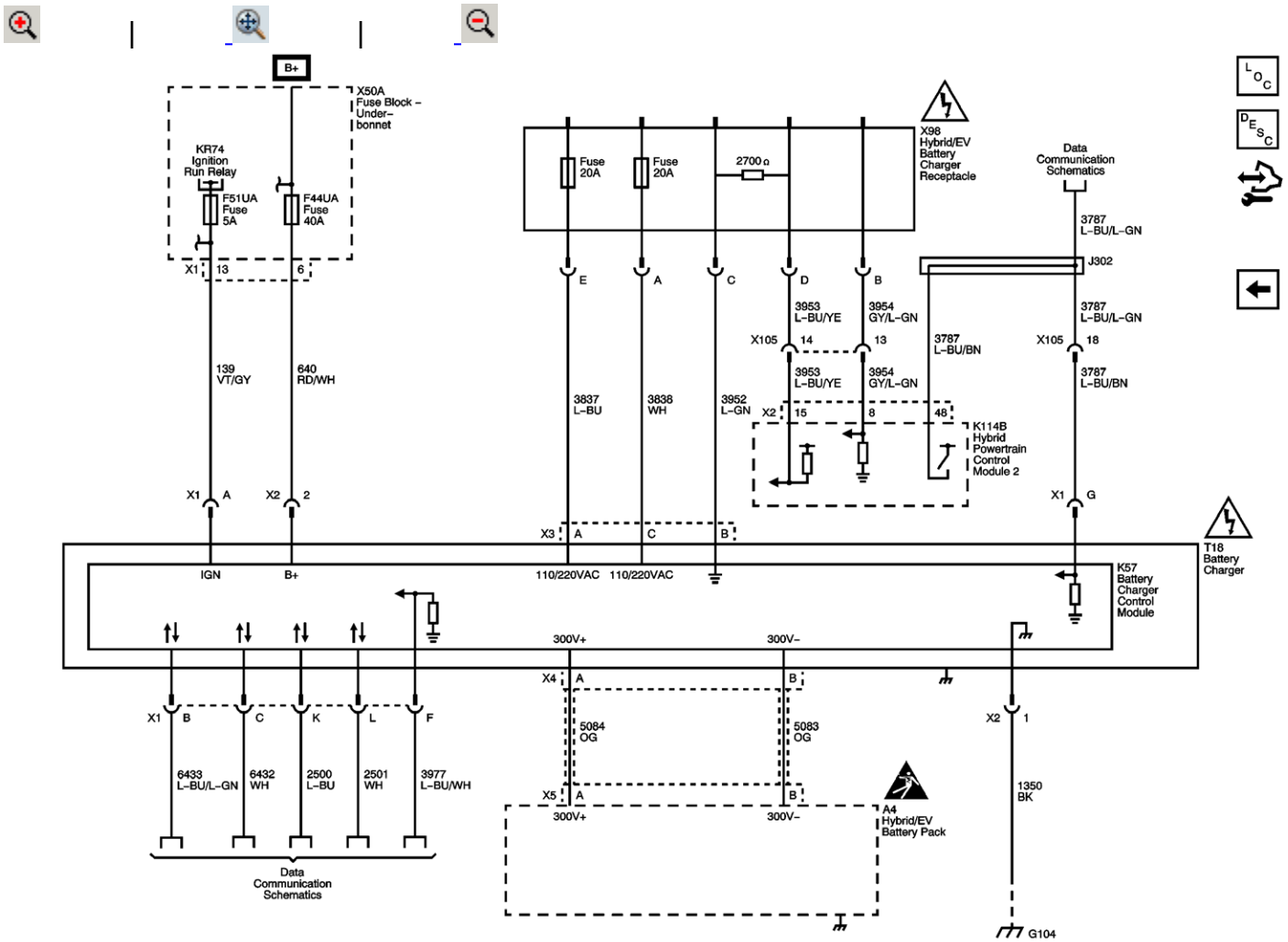

Master Electrical Component List

Plug-In Charging System Description and Operation

Battery State of Charge

Charging Port Door

Master Electrical Schematic Icons

F32UA, F33UA, F50UA, F51UA, F52UA, F53UA and F54UA Fuses

F31UA, F35UA, F37UA, F42UA, F44UA and F48UA Fuses

Master Electrical Schematic Icons

Data Communication Schematics

G103, G104 and G105

© Copyright Chevrolet. All rights reserved

Battery State of Charge

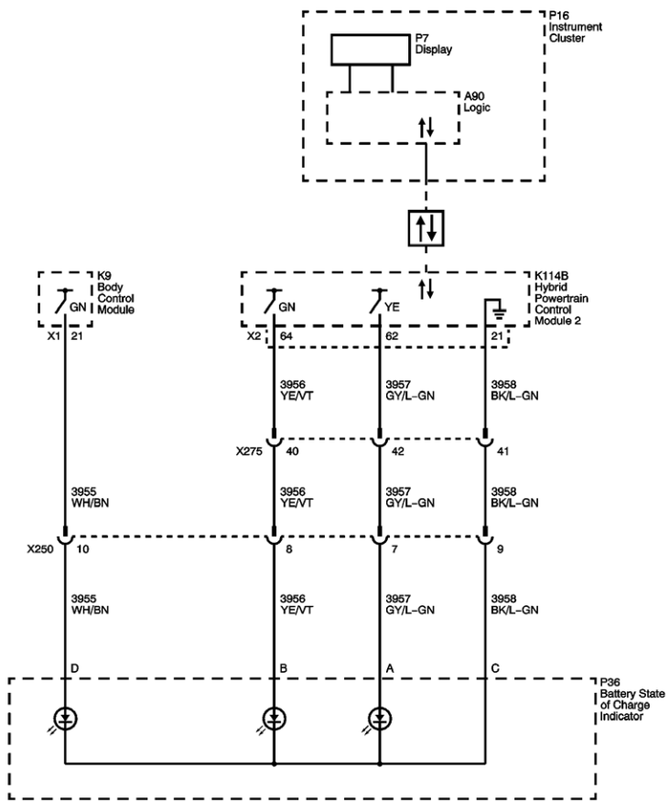

Master Electrical Component List

Plug-In Charging System Description and Operation

Battery Charger

© Copyright Chevrolet. All rights reserved

High Speed GMLAN

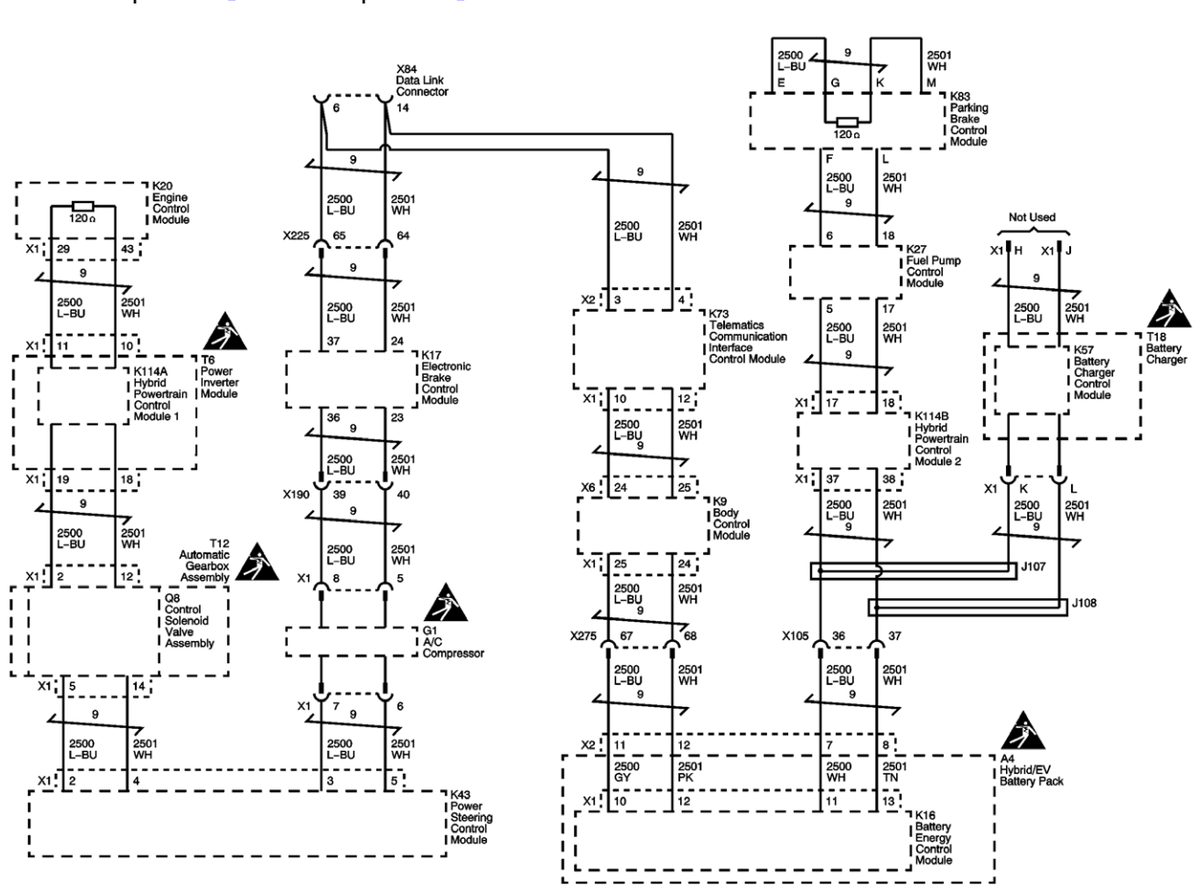

Master Electrical Component List

Data Link Communications Description and Operation

High-Voltage Management and Powertrain Expansion Buses

Master Electrical Schematic Icons

© Copyright Chevrolet. All rights reserved

High-Voltage Management and Powertrain Expansion Buses

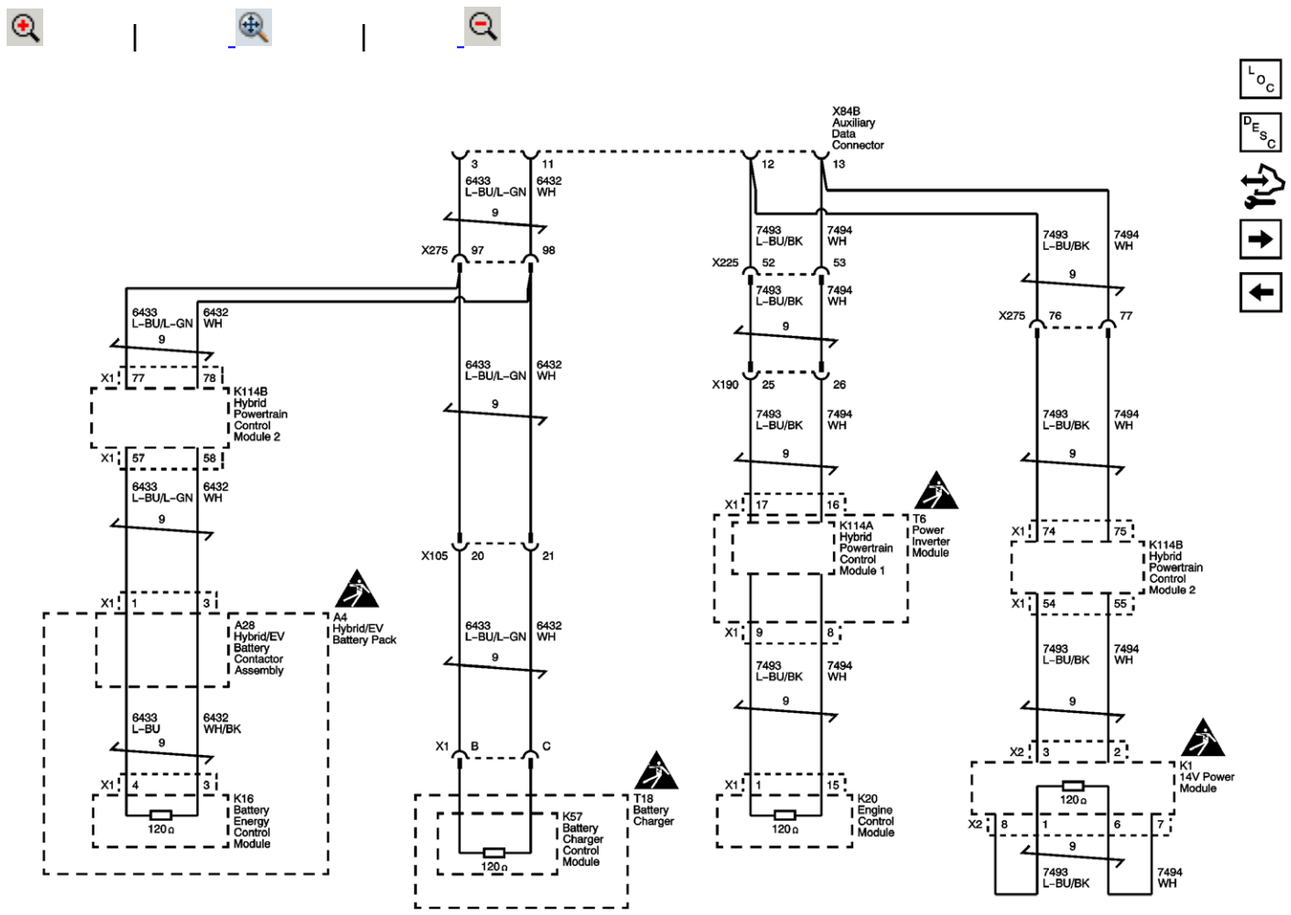

Master Electrical Component List

Data Link Communications Description and Operation

Chassis Expansion Bus

High Speed GMLAN

Master Electrical Schematic Icons

© Copyright Chevrolet. All rights reserved

Chassis Expansion Bus

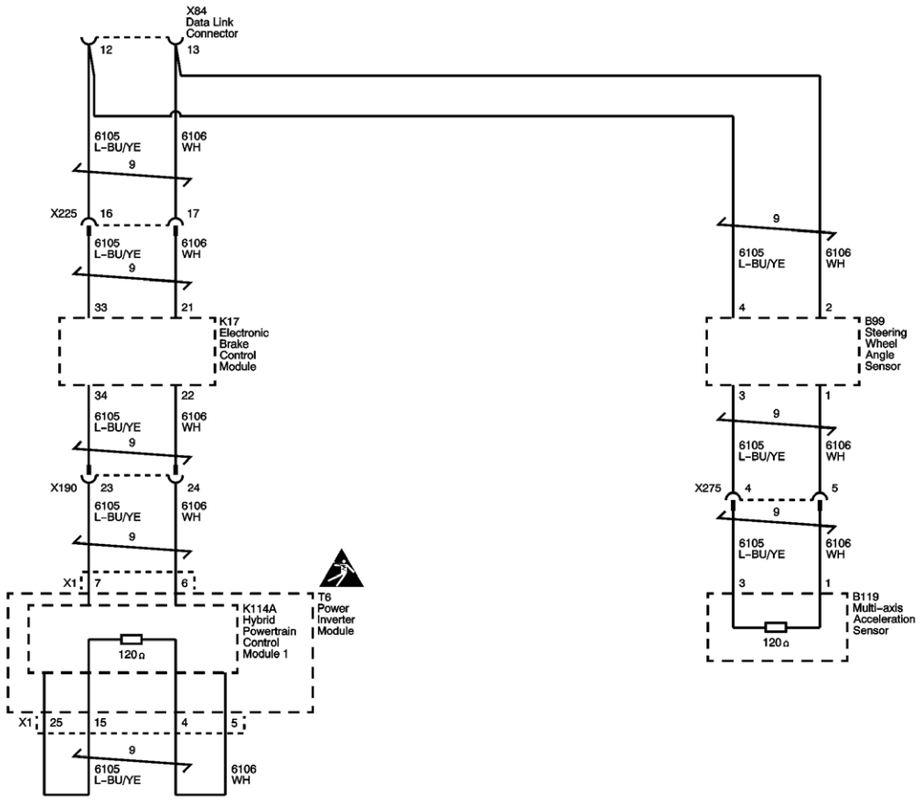

Master Electrical Component List

Data Link Communications Description and Operation

Low Speed CAN

High-Voltage Management and Powertrain Expansion Buses

Master Electrical Schematic Icons

© Copyright Chevrolet. All rights reserved

Low Speed CAN

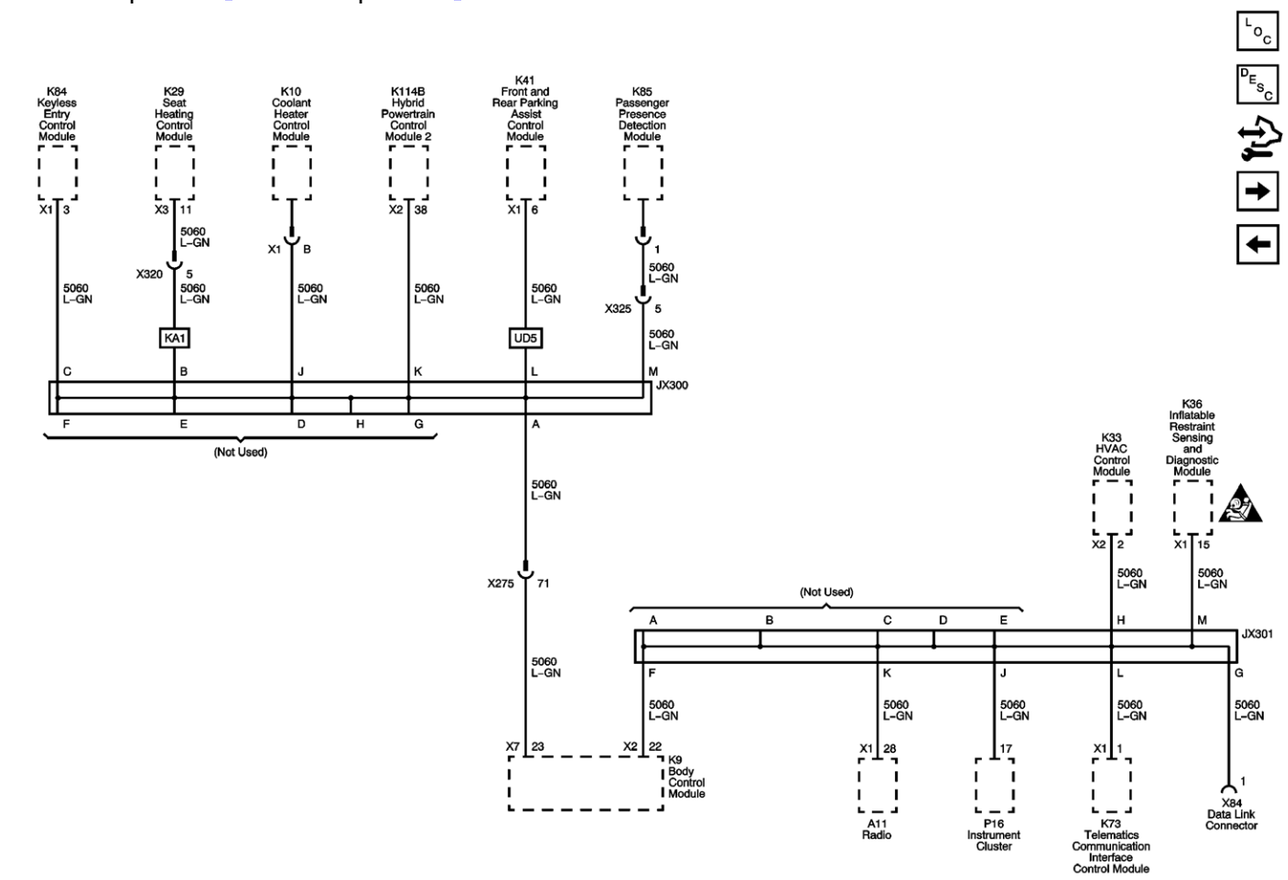

Master Electrical Component List

Data Link Communications Description and Operation

Communications Enable

Chassis Expansion Bus

Master Electrical Schematic Icons

© Copyright Chevrolet. All rights reserved

Communications Enable

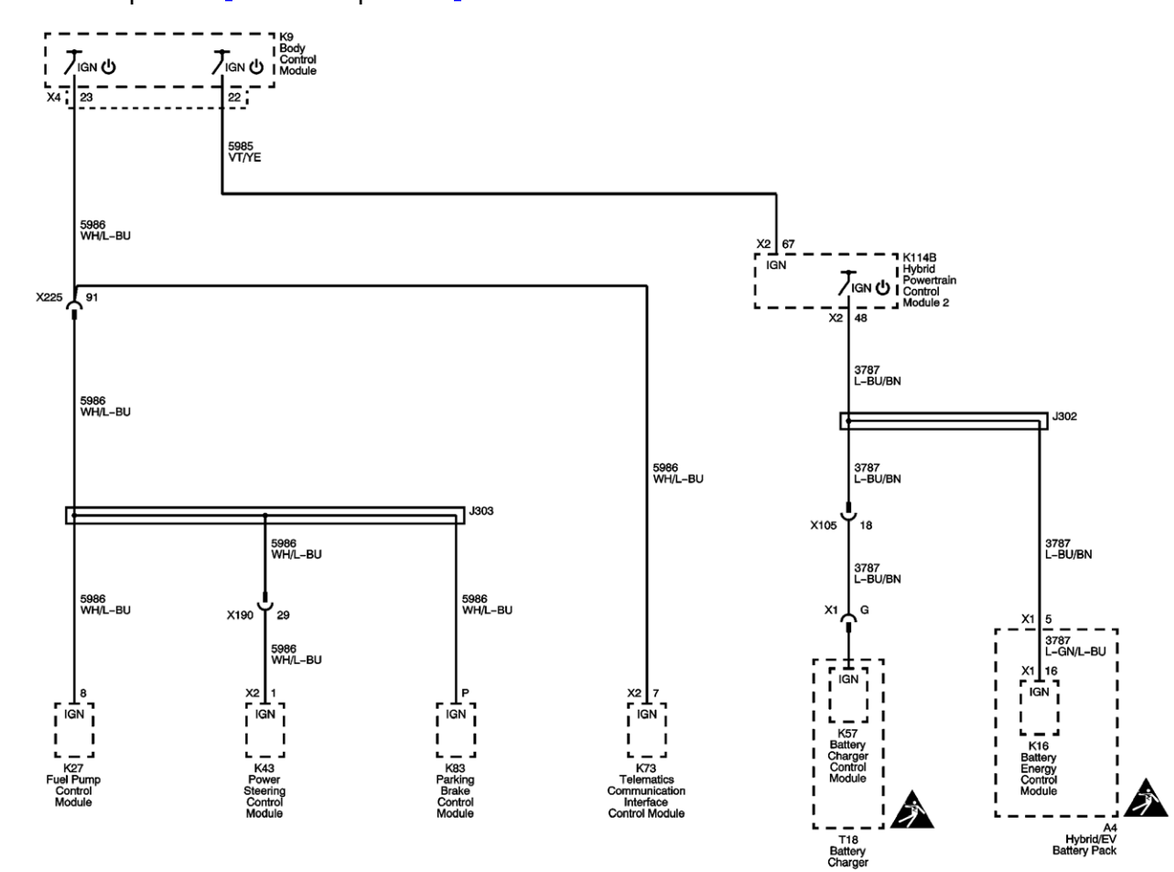

Master Electrical Component List

Data Link Communications Description and Operation

Serial Data Wake-Up

Low Speed CAN

Master Electrical Schematic Icons

© Copyright Chevrolet. All rights reserved

Serial Data Wake-Up

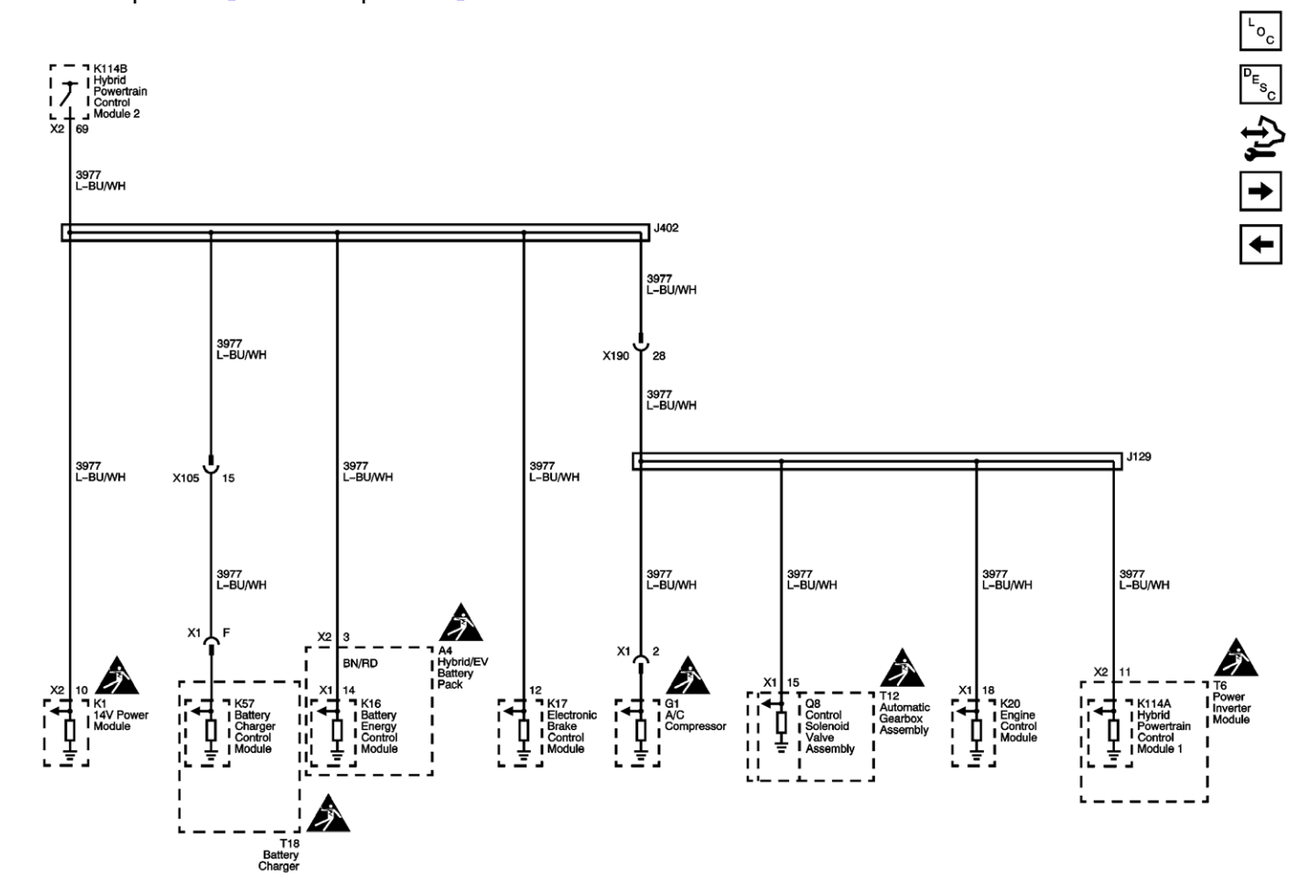

Master Electrical Component List

Data Link Communications Description and Operation

Linear Interconnect Network (LIN)

Communications Enable

© Copyright Chevrolet. All rights reserved

Linear Interconnect Network (LIN)

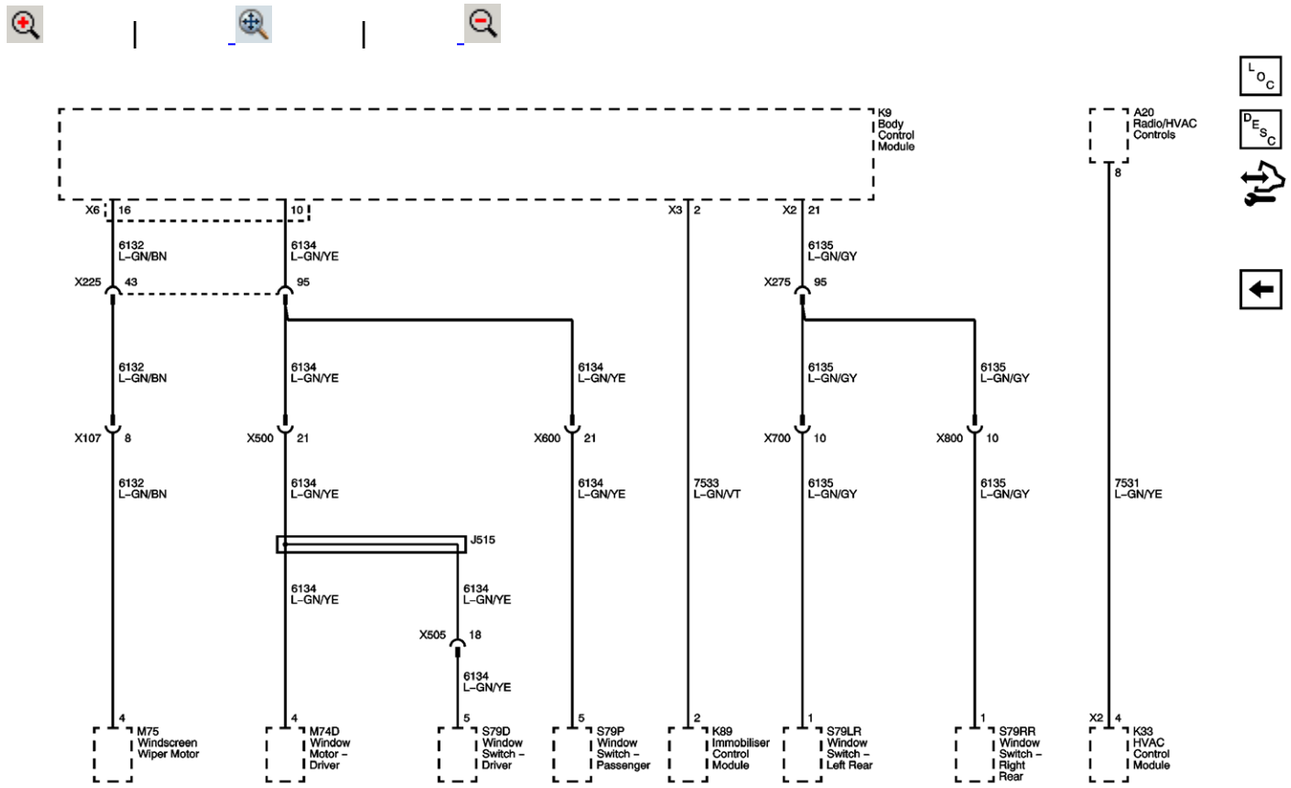

Master Electrical Component List

Data Link Communications Description and Operation

Serial Data Wake-Up

© Copyright Chevrolet. All rights reserved

Power, Ground, and Data Communication

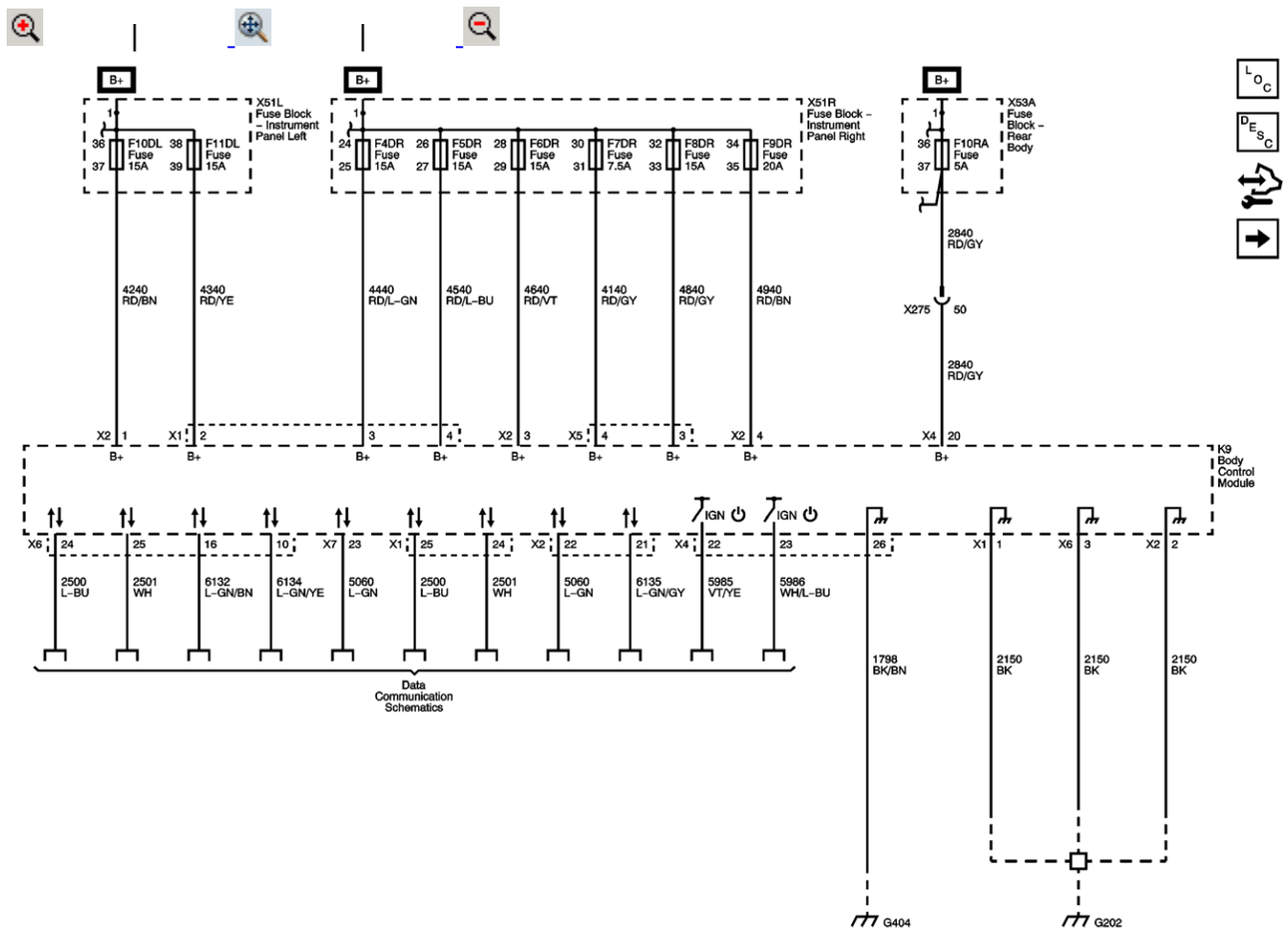

Master Electrical Component List

Body Control System Description and Operation

Subsystem References (1 of 3)

© Copyright Chevrolet. All rights reserved

Subsystem References (1 of 3)

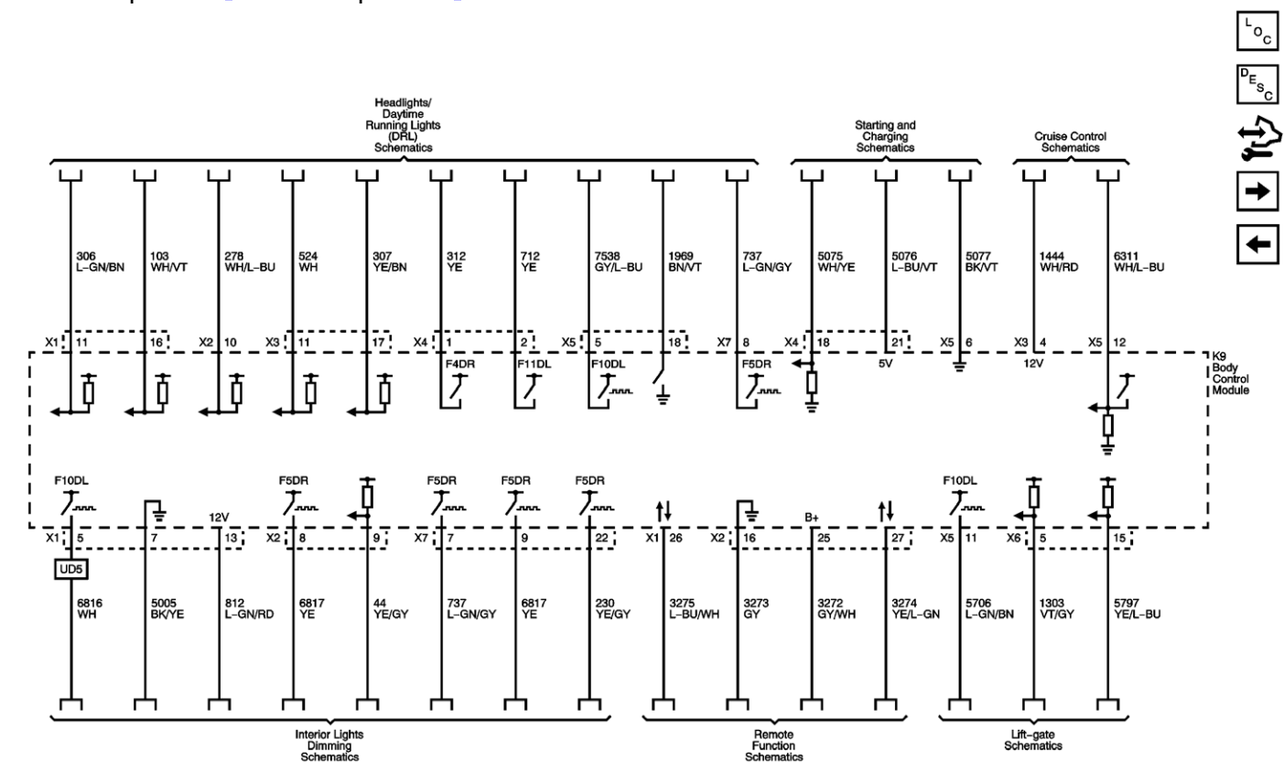

Master Electrical Component List

Body Control System Description and Operation

Subsystem References (2 of 3)

Power, Earth and Data Communication

© Copyright Chevrolet. All rights reserved

Subsystem References (2 of 3)

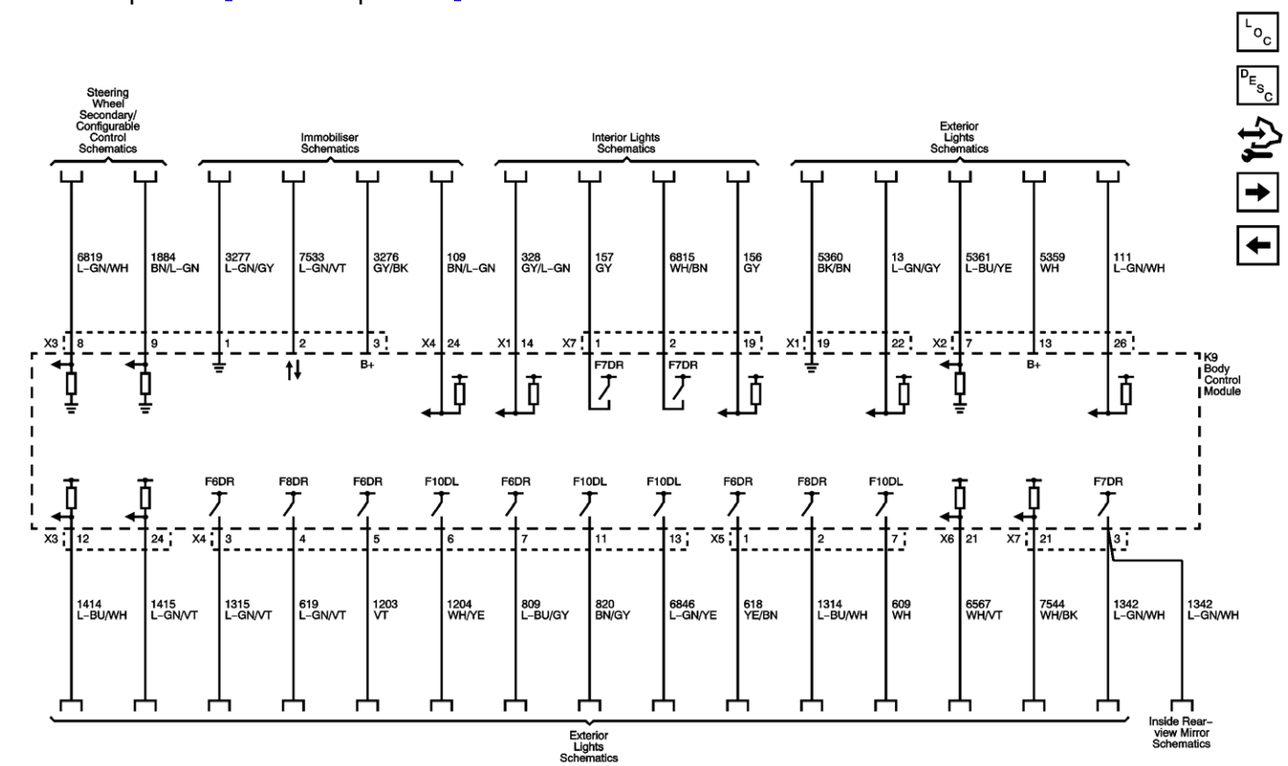

Master Electrical Component List

Body Control System Description and Operation

Subsystem References (3 of 3)

Subsystem References (1 of 3)

F4DR, F5DR, F6DR, F7DR, F8DR, F9DR, F10DR, F11DR and F12DR Fuses

F1DL, F2DL, F3DL, F4DL, F5DL, F6DL, F7DL, F10DL, F11DL and F15DL Fuses

F4DR, F5DR, F6DR, F7DR, F8DR, F9DR, F10DR, F11DR and F12DR Fuses

F1DL, F2DL, F3DL, F4DL, F5DL, F6DL, F7DL, F10DL, F11DL and F15DL Fuses

F4DR, F5DR, F6DR, F7DR, F8DR, F9DR, F10DR, F11DR and F12DR Fuses

F1DL, F2DL, F3DL, F4DL, F5DL, F6DL, F7DL, F10DL, F11DL and F15DL Fuses

F4DR, F5DR, F6DR, F7DR, F8DR, F9DR, F10DR, F11DR and F12DR Fuses

© Copyright Chevrolet. All rights reserved

Subsystem References (3 of 3)

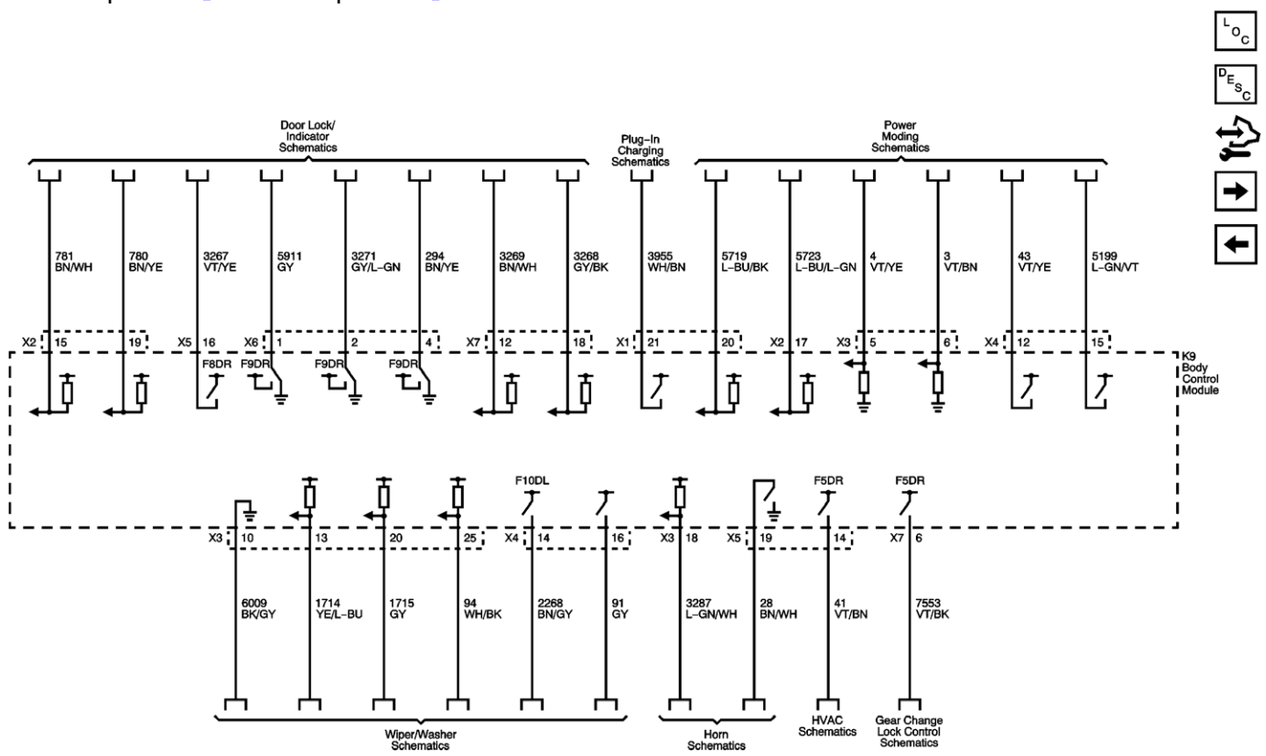

Master Electrical Component List

Body Control System Description and Operation

Subsystem References (2 of 3)

F4DR, F5DR, F6DR, F7DR, F8DR, F9DR, F10DR, F11DR and F12DR Fuses

F1DL, F2DL, F3DL, F4DL, F5DL, F6DL, F7DL, F10DL, F11DL and F15DL Fuses

F4DR, F5DR, F6DR, F7DR, F8DR, F9DR, F10DR, F11DR and F12DR Fuses

© Copyright Chevrolet. All rights reserved

Front Fascia Harness Routing

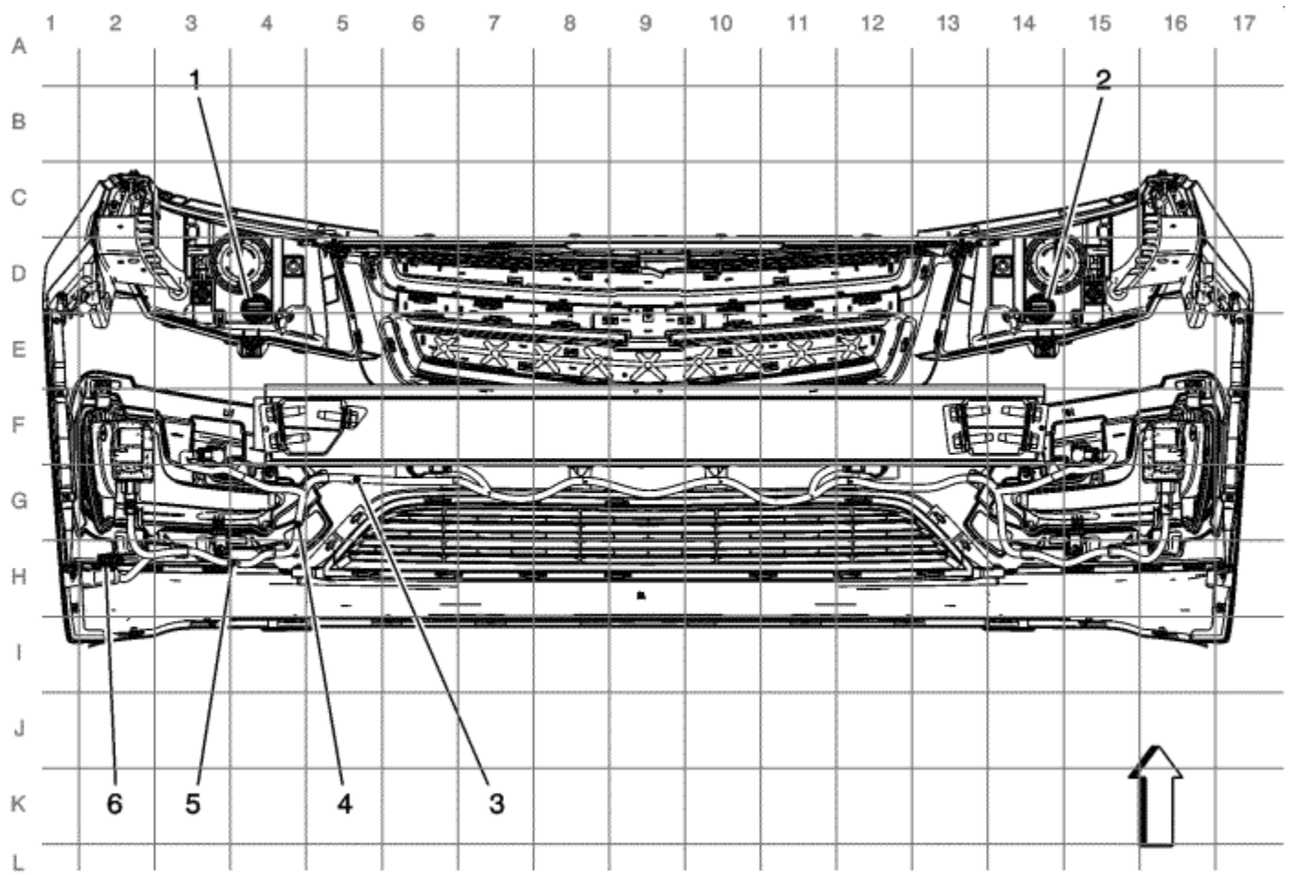

(1) X110
(2) X120
(3) J102
(4) J101
(5) J100
(6) X100 (UD5) or X101 (without UD5)

© Copyright Chevrolet. All rights reserved

Front of Engine Compartment Harness Routing

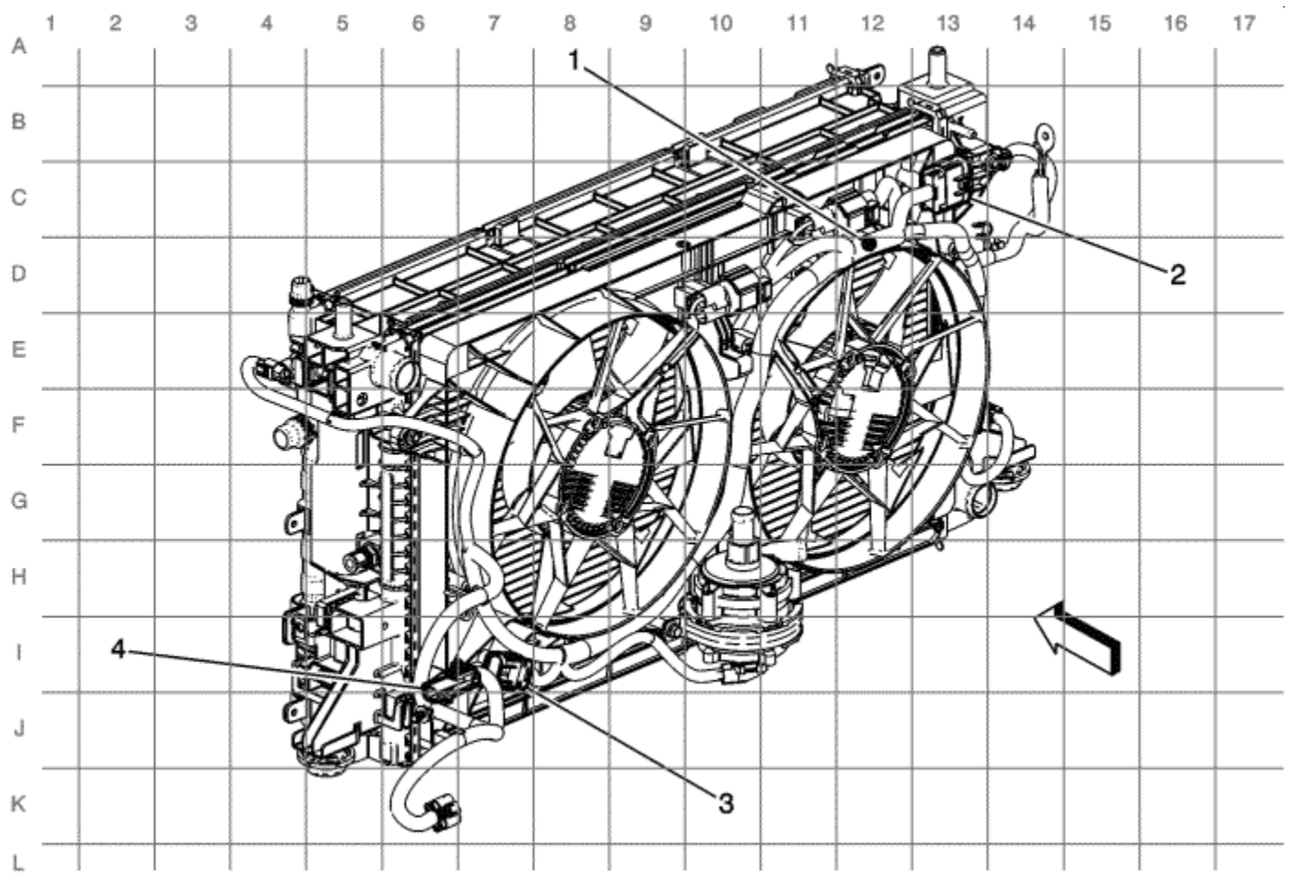

(1) J110
(2) X103
(3) X102
(4) X104

© Copyright Chevrolet. All rights reserved

Left Side of Engine Compartment Harness Routing

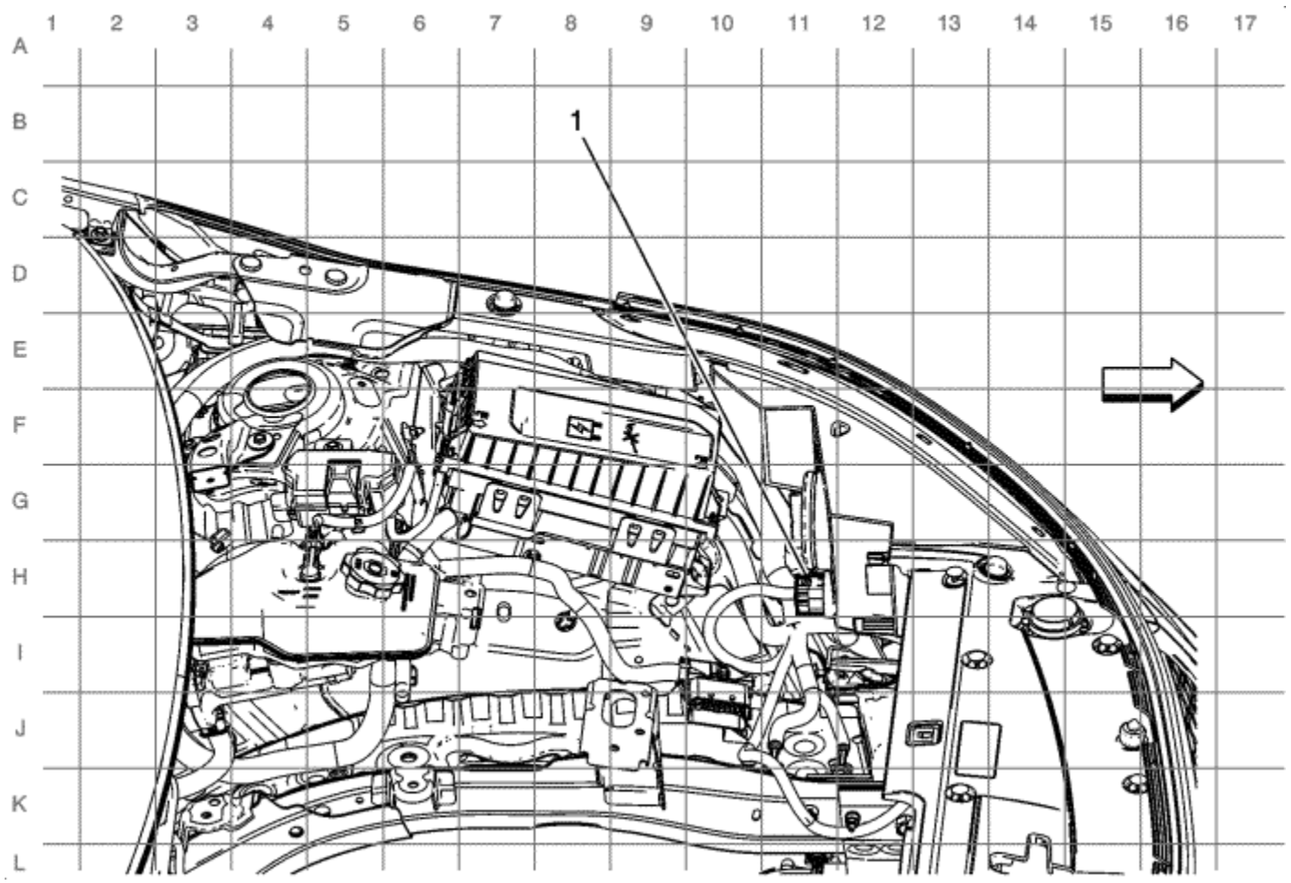

(1) X110

© Copyright Chevrolet. All rights reserved

Right Side of Engine Compartment Harness Routing

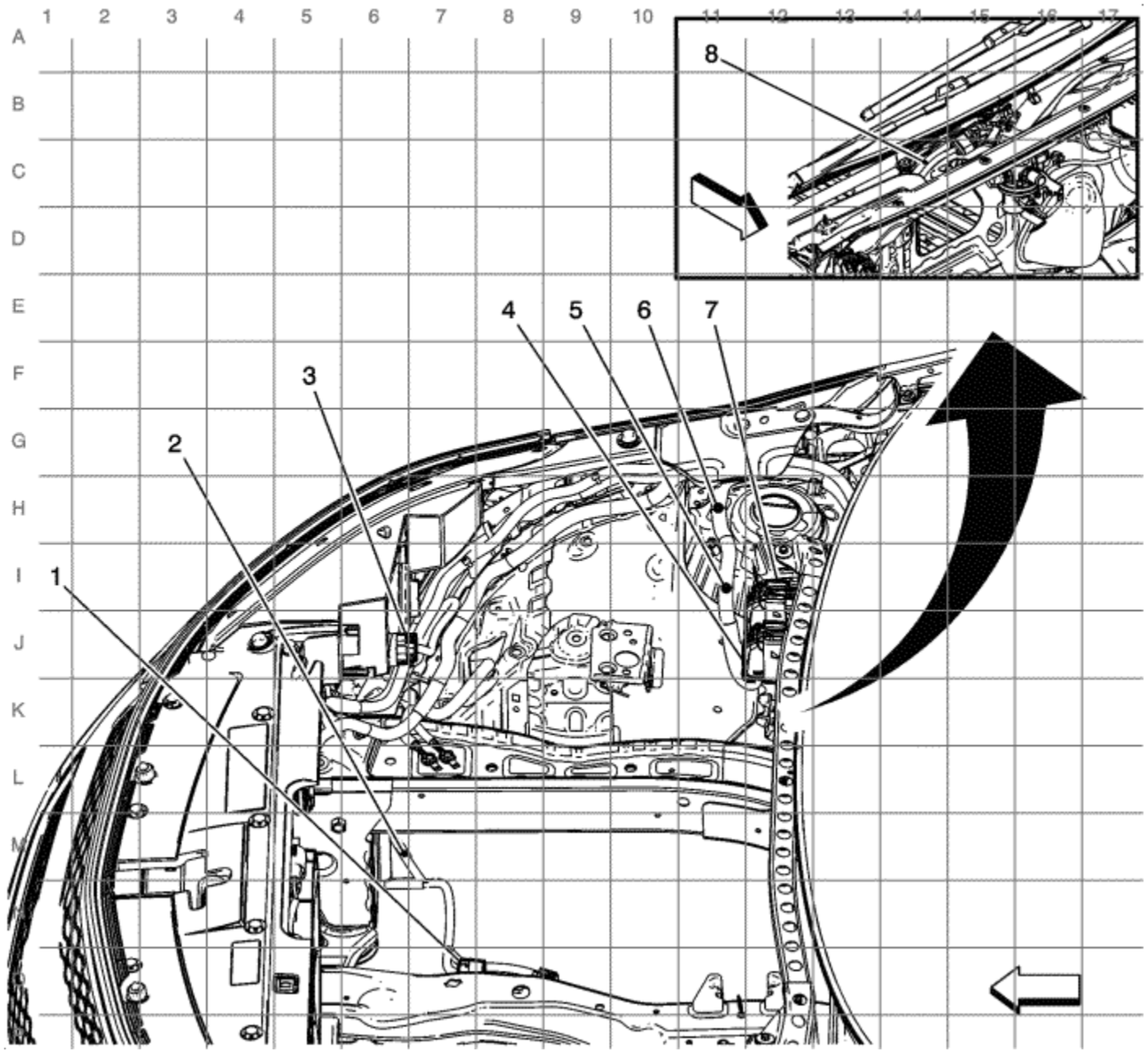

(1) X180
(2) J106
(3) X120
(4) J108
(5) J107
(6) X107

(7) X105
(8) J105

© Copyright Chevrolet. All rights reserved

Engine Harness Routing

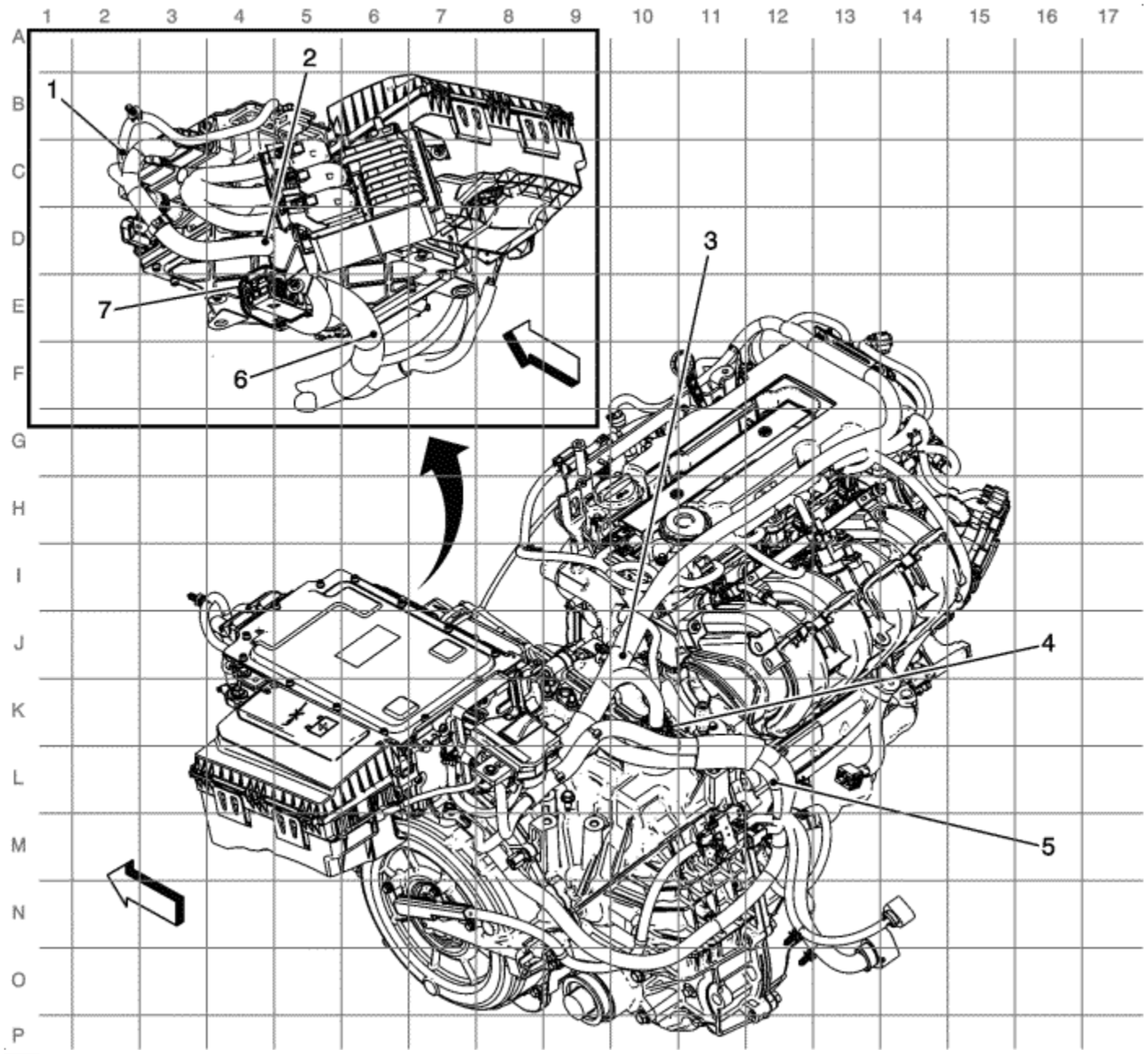

(1) J130
(2) J129
(3) J128
(4) X190
(5) J125
(6) X178

(7) J126

© Copyright Chevrolet. All rights reserved

Left Side of Passenger Compartment Harness Routing

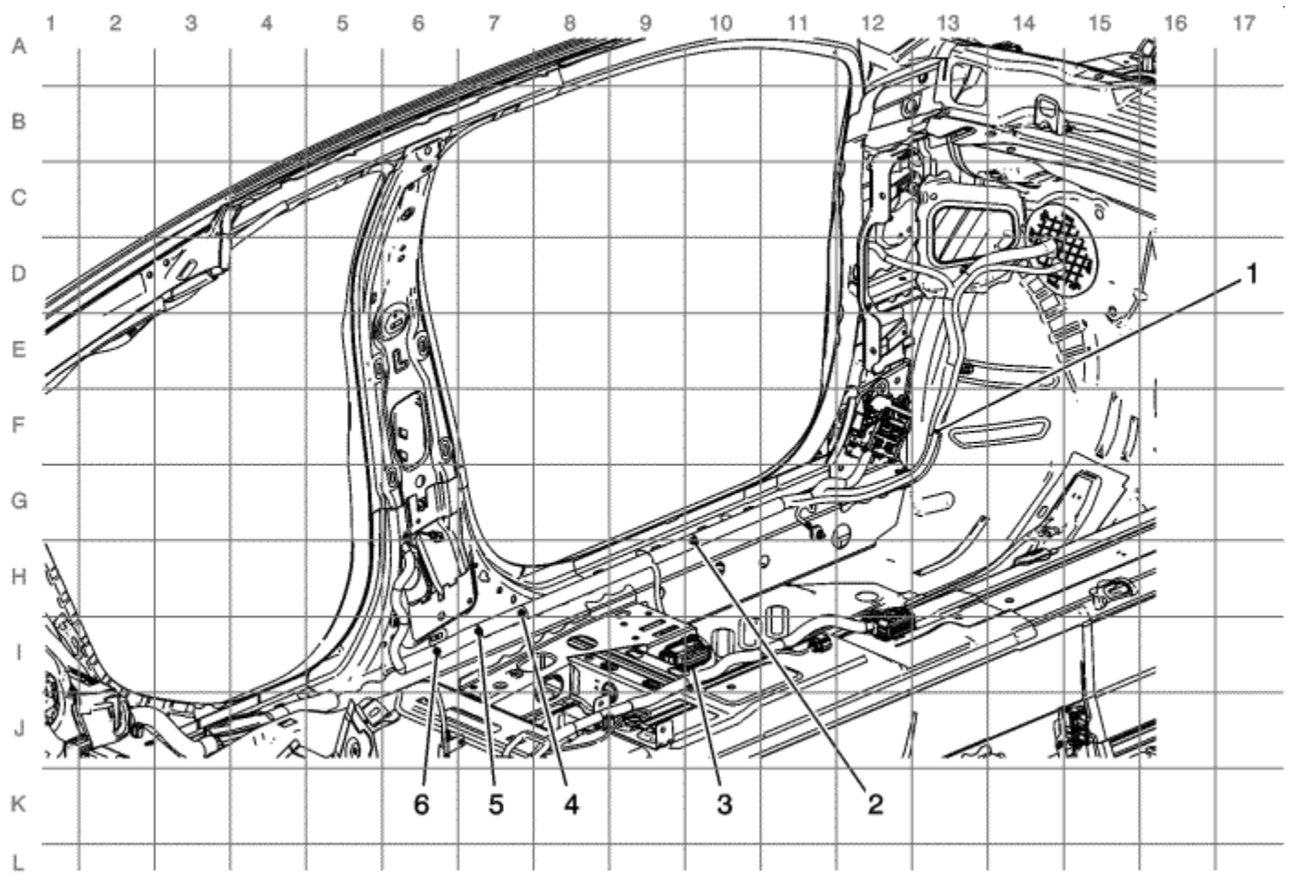

(1) J310
(2) J309
(3) J308
(4) J320
(5) J304
(6) J301

© Copyright Chevrolet. All rights reserved

Right Side of Passenger Compartment Harness Routing

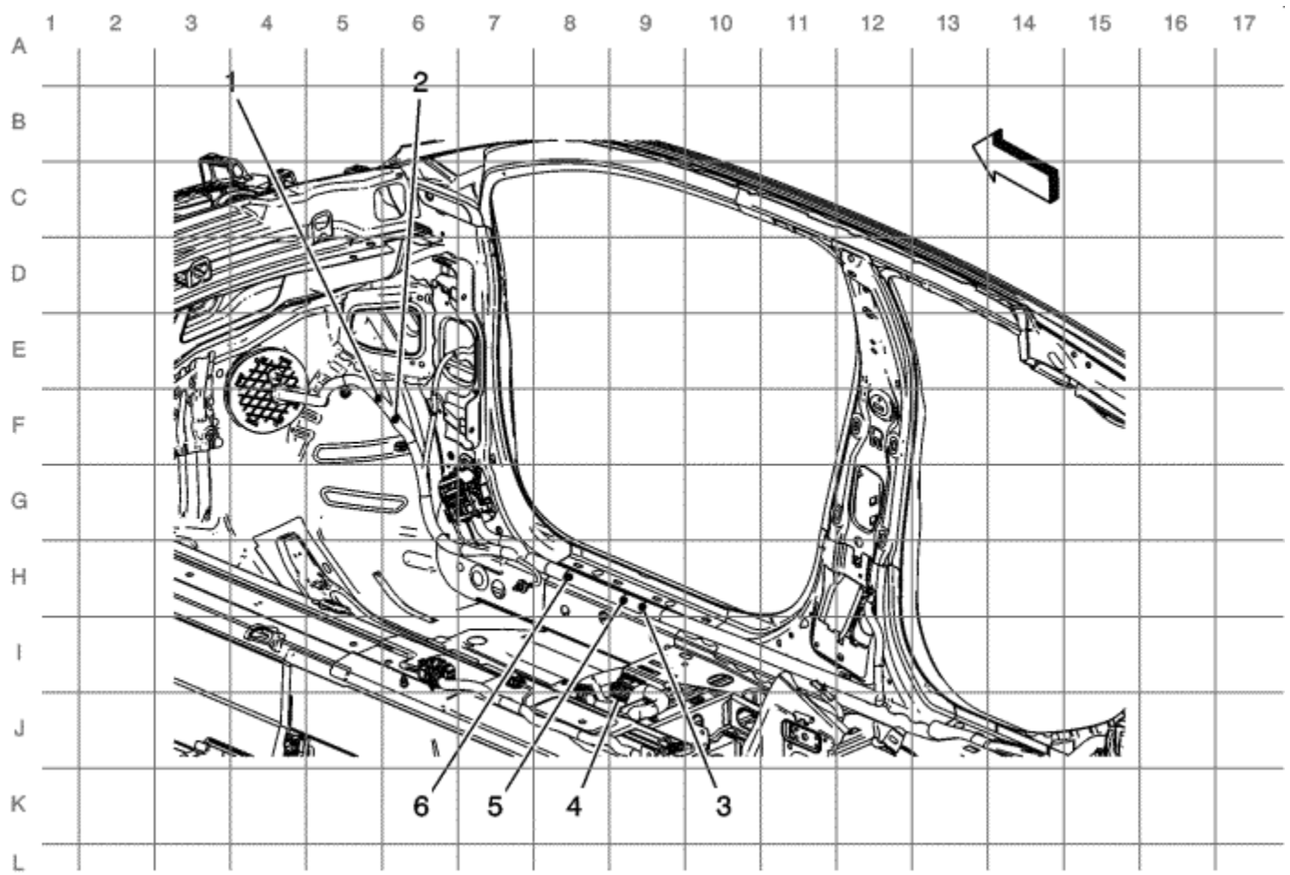

(1) J302
(2) J303
(3) J305
(4) J306
(5) J307
(6) J325

© Copyright Chevrolet. All rights reserved

Headliner Harness Routing

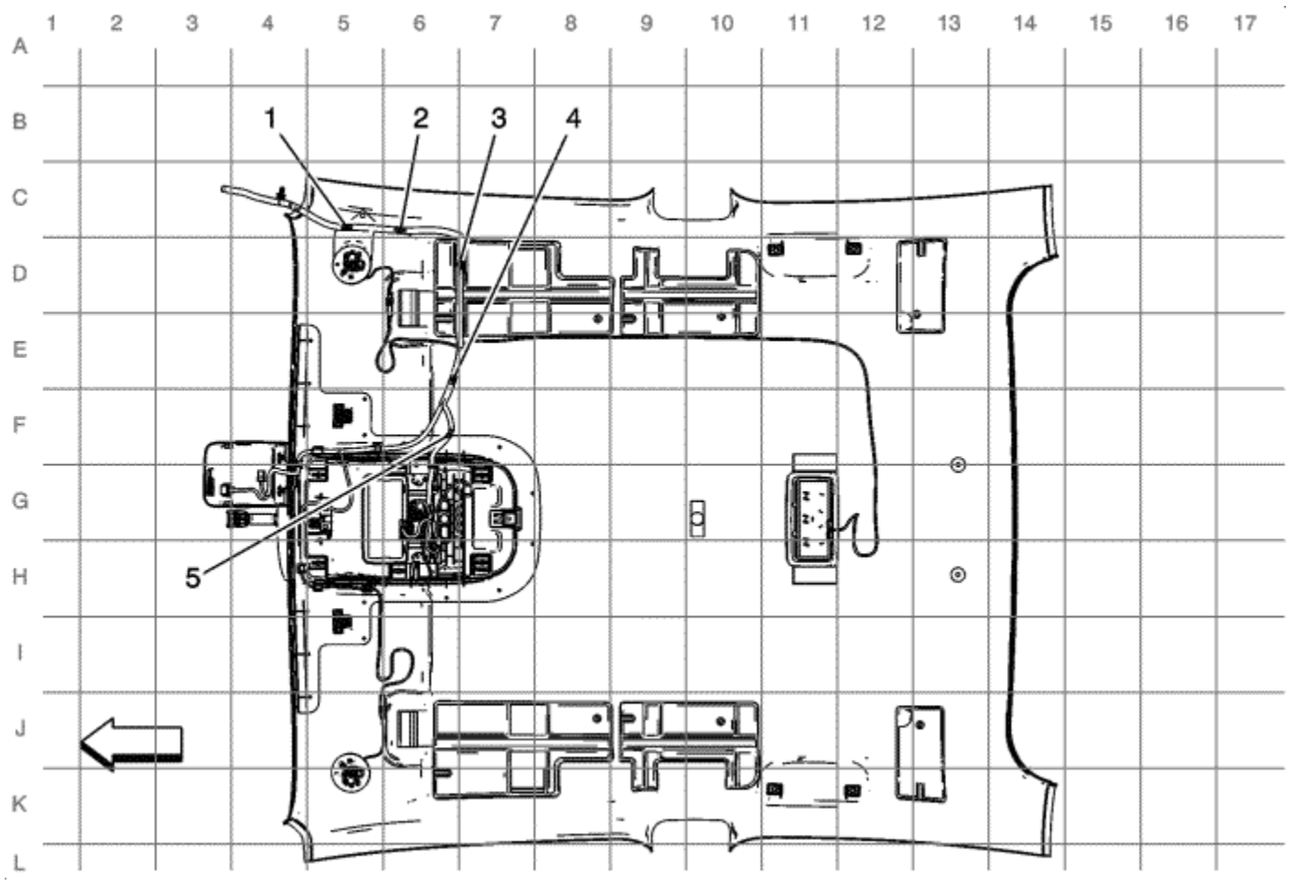

(1) J354
(2) J353
(3) J352
(4) J350
(5) J351

© Copyright Chevrolet. All rights reserved

Instrument Panel Harness Routing

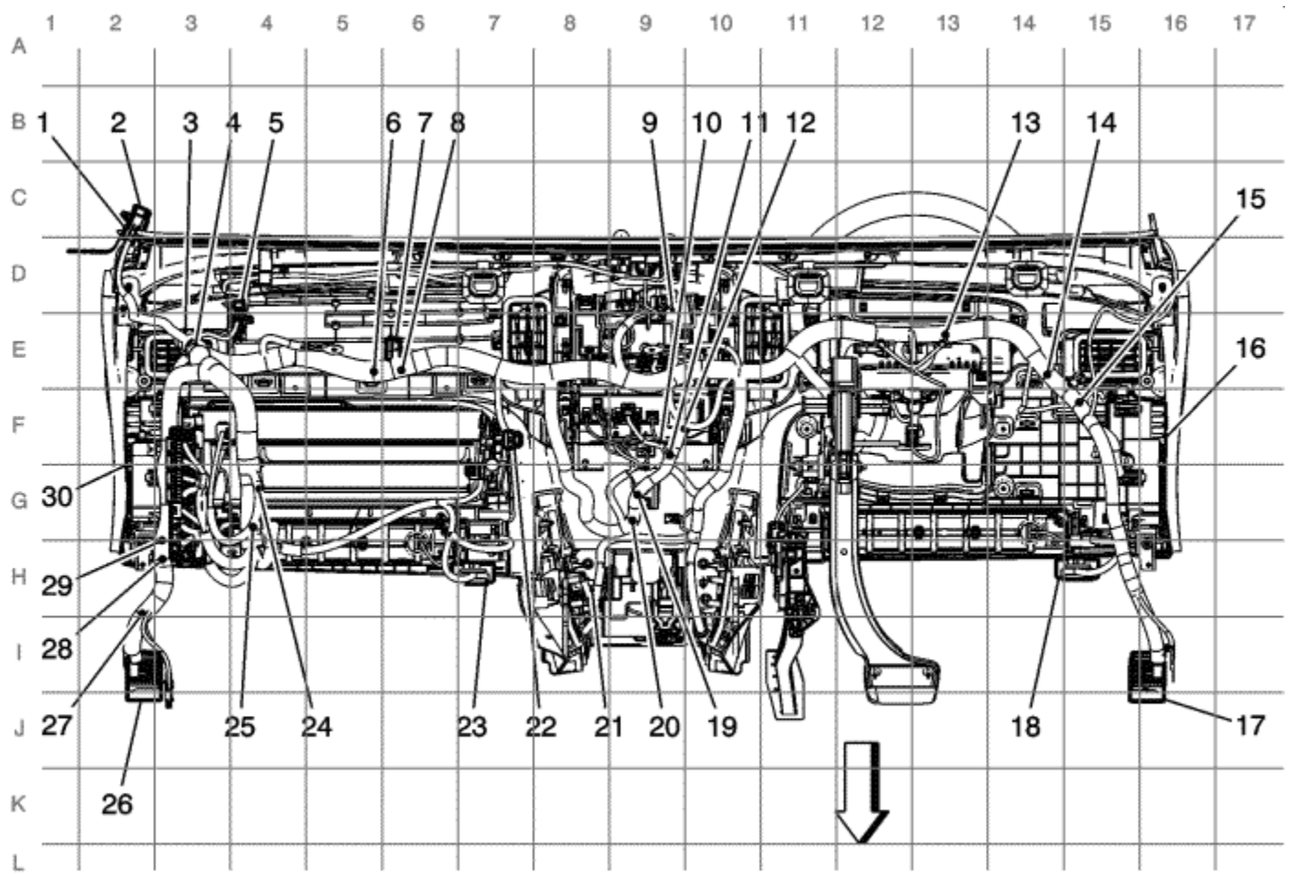

(1) X311
(2) X310
(3) J223
(4) J222
(5) X250
(6) J220

(7) X260
(8) J221
(9) J205
(10) J206
(11) J210
(12) J209
(13) J203
(14) J201
(15) J202
(16) X51L Fuse Block - Instrument Panel Left
(17) X225
(18) X84 Data Link Connector
(19) J208
(20) J207
(21) J204
(22) X252
(23) X84B Auxiliary Data Connector
(24) J227
(25) J228
(26) X275
(27) J224
(28) J225
(29) J226
(30) X51R Fuse Block - Instrument Panel Right

© Copyright Chevrolet. All rights reserved

Center Console Harness Routing

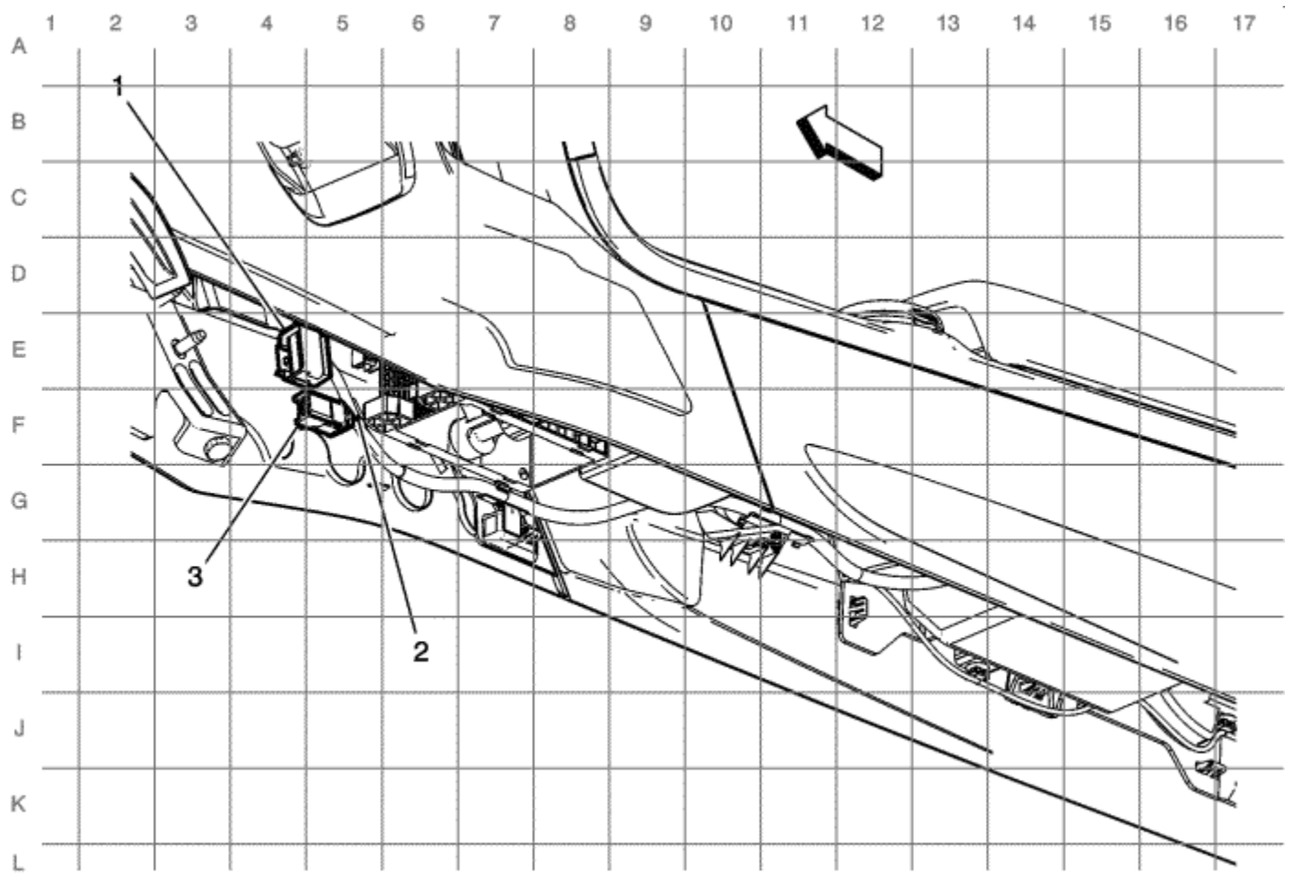

(1) X315
(2) X316
(3) J317

© Copyright Chevrolet. All rights reserved

Driver Door Harness Routing

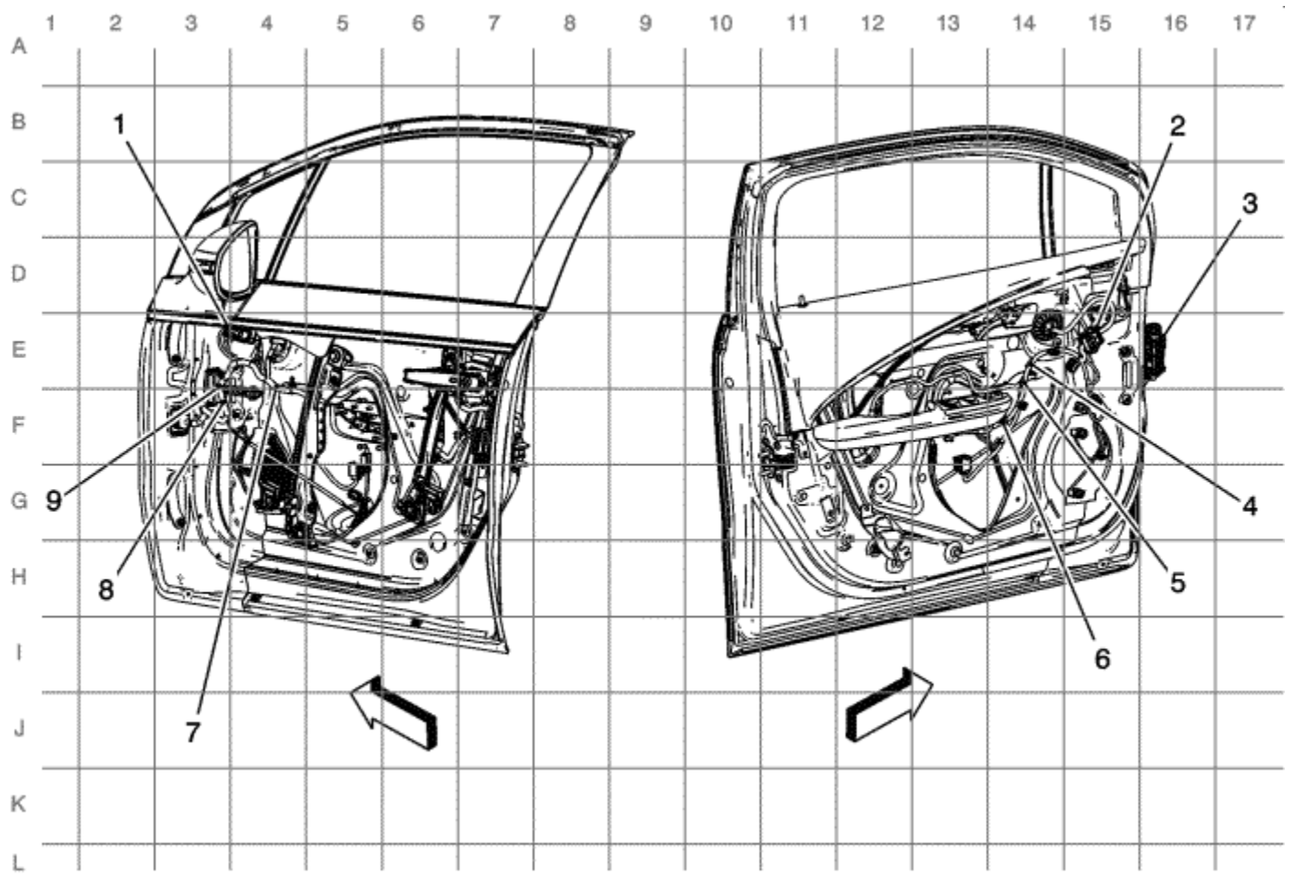

(1) X510
(2) X505
(3) X500
(4) J517
(5) J518
(6) J519

(7) Jxxx
(8) J516
(9) J515

© Copyright Chevrolet. All rights reserved

Passenger Door Harness Routing

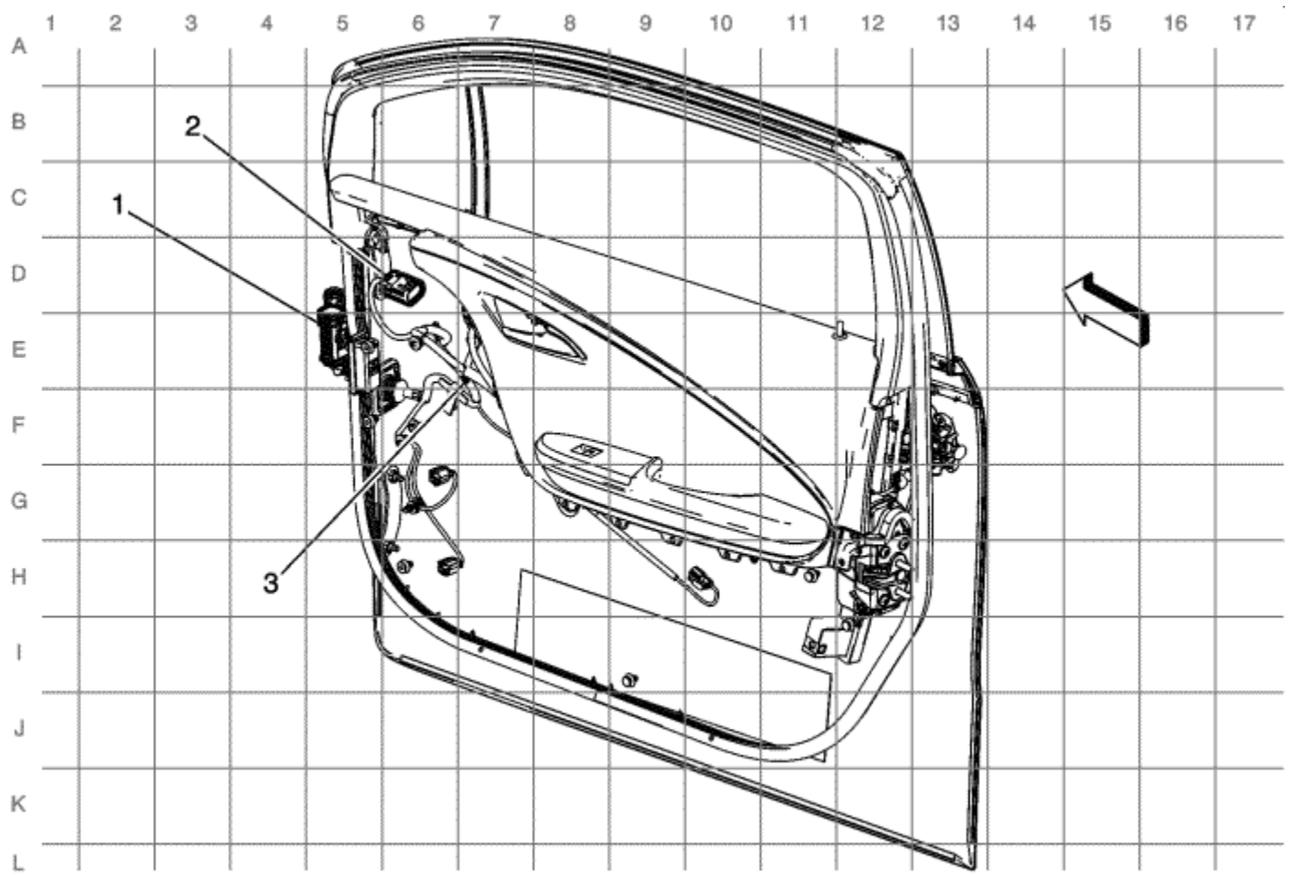

(1) X600
(2) X610
(3) X615

© Copyright Chevrolet. All rights reserved

Left Rear Door Harness Routing

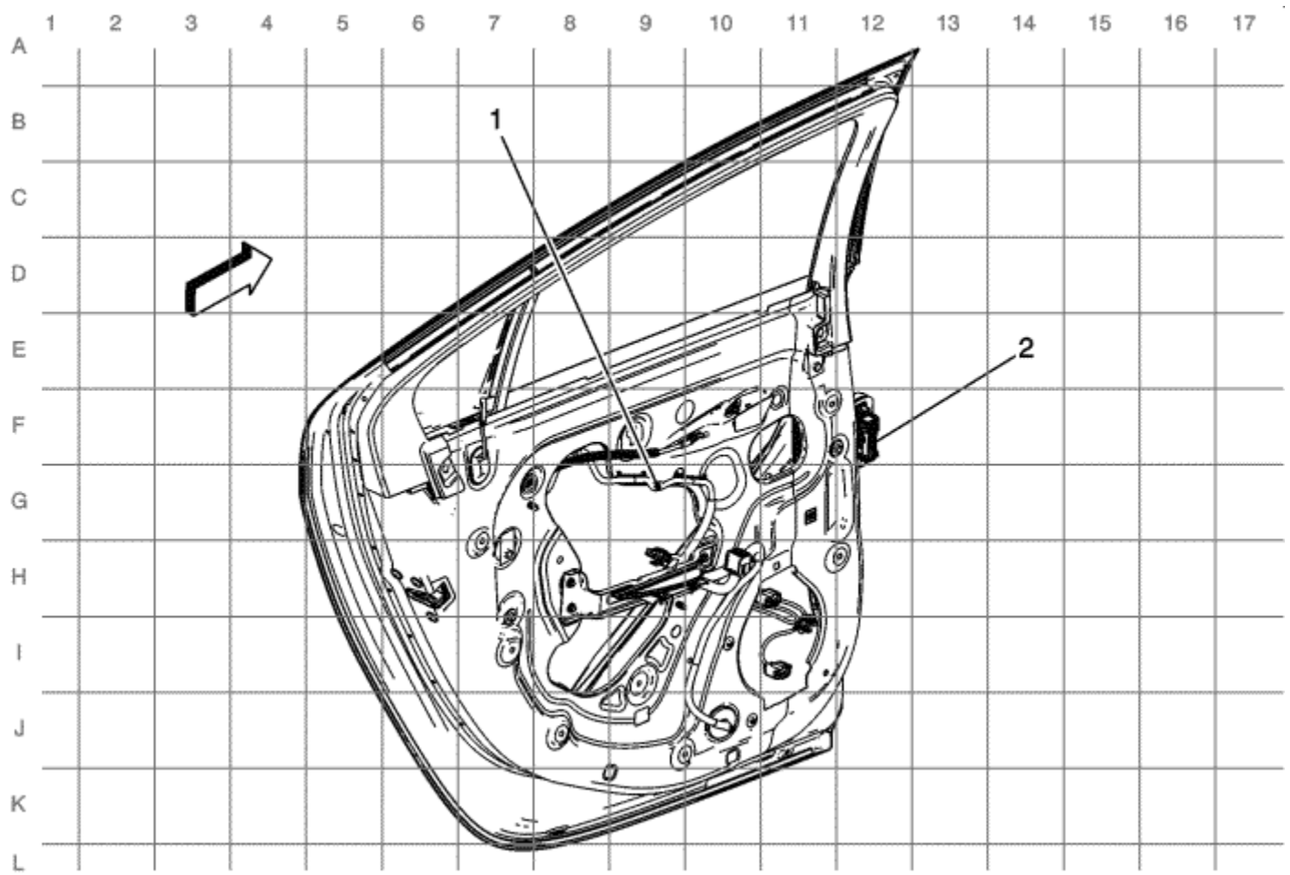

(1) J716
(2) X700

© Copyright Chevrolet. All rights reserved

Right Rear Door Harness Routing

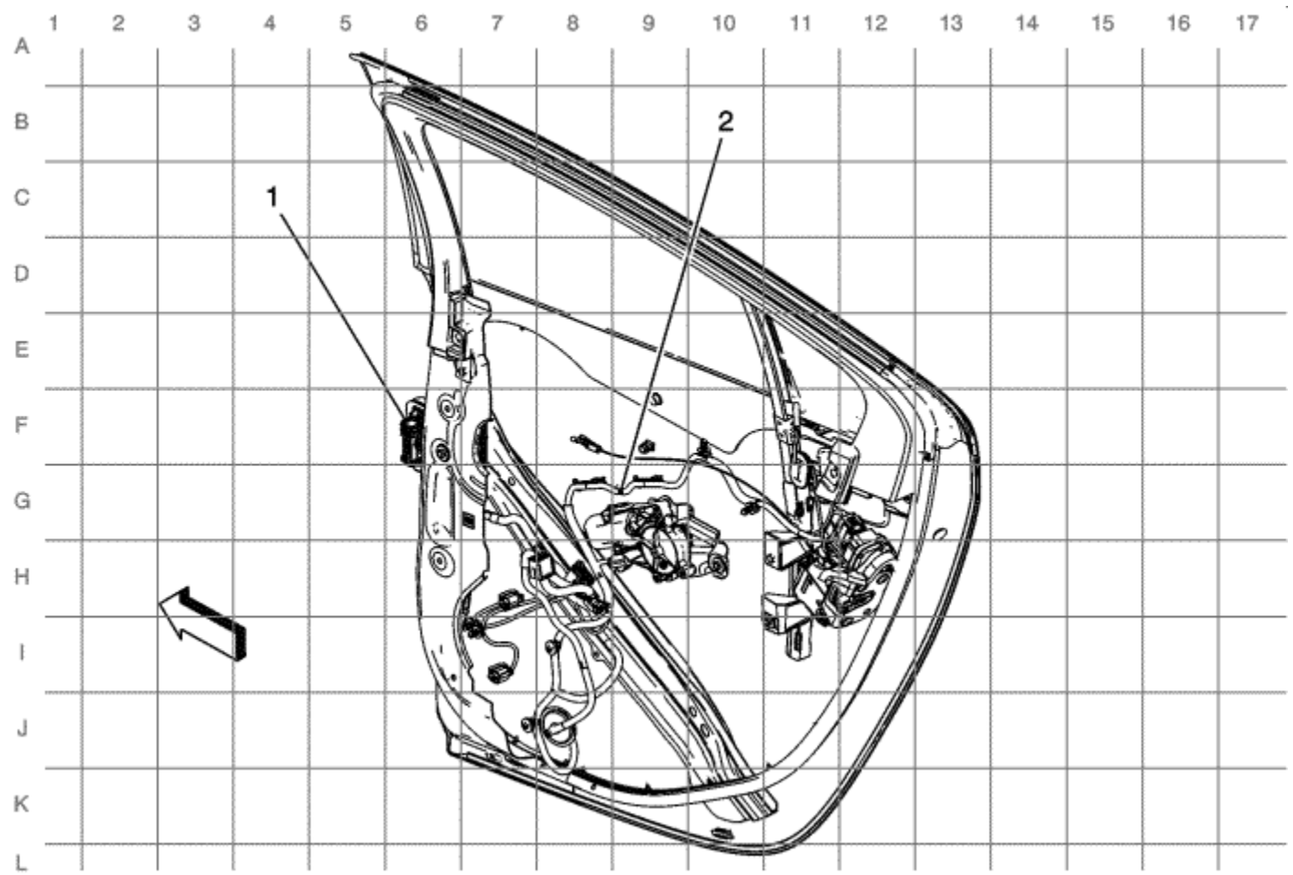

(1) X800
(2) J815

© Copyright Chevrolet. All rights reserved

Liftgate Harness Routing

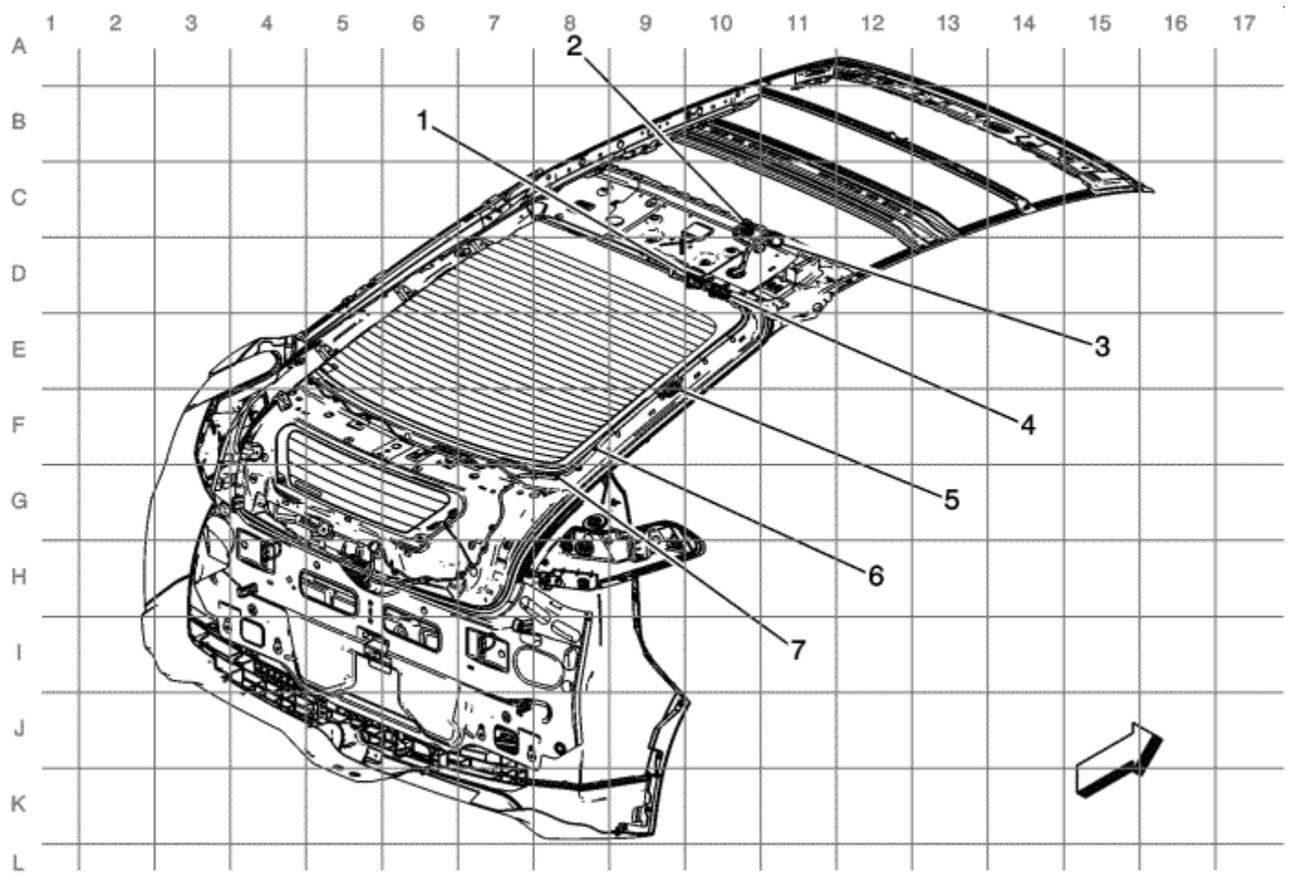

(1) X905
(2) X900
(3) X901
(4) X906
(5) X907
(6) J901

(7) J902

© Copyright Chevrolet. All rights reserved

Left Side of Luggage Compartment Harness Routing

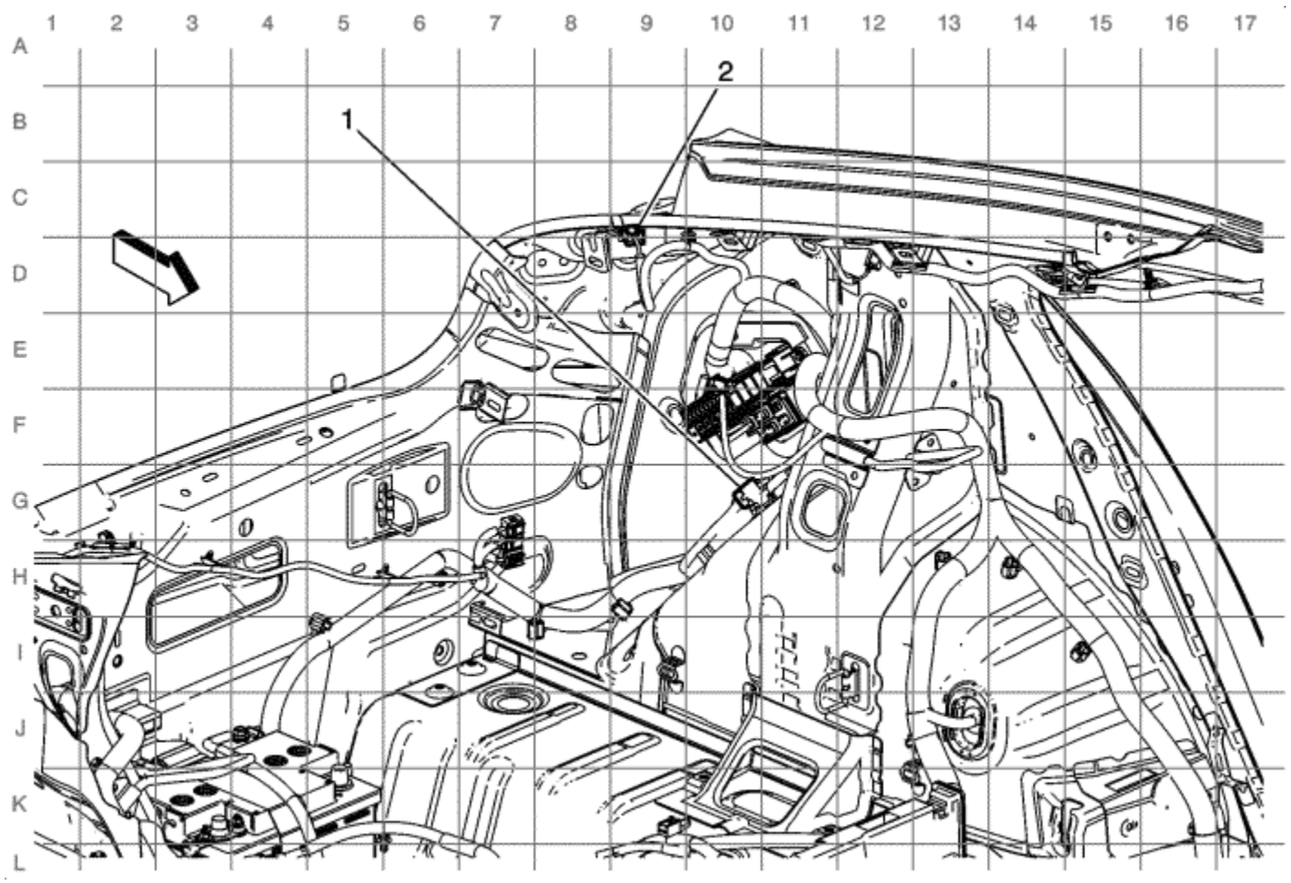

(1) X410
(2) JX300

© Copyright Chevrolet. All rights reserved

Right Side of Luggage Compartment Harness Routing

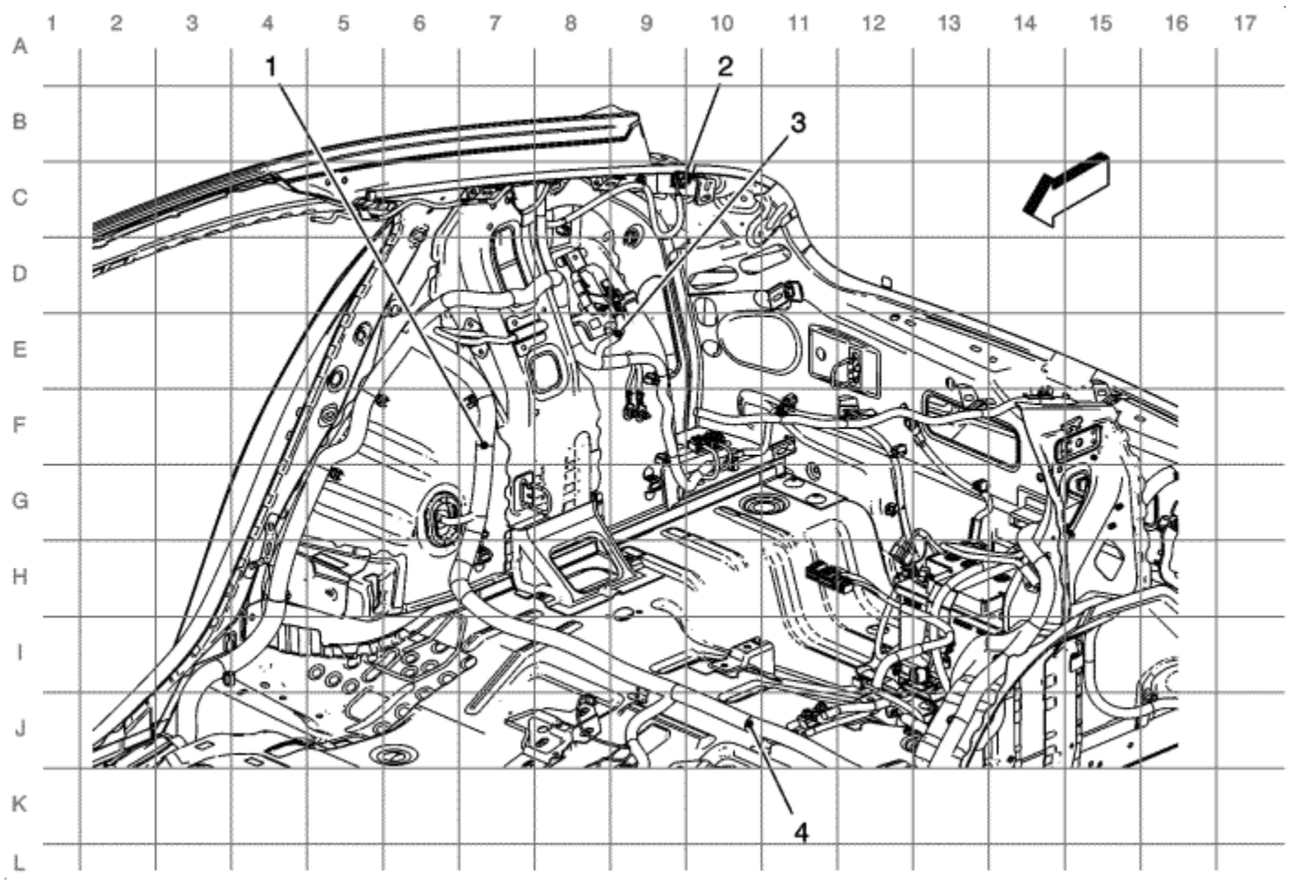

(1) J401
(2) J403
(3) J420
(4) J402

© Copyright Chevrolet. All rights reserved

Rear of Vehicle Harness Routing

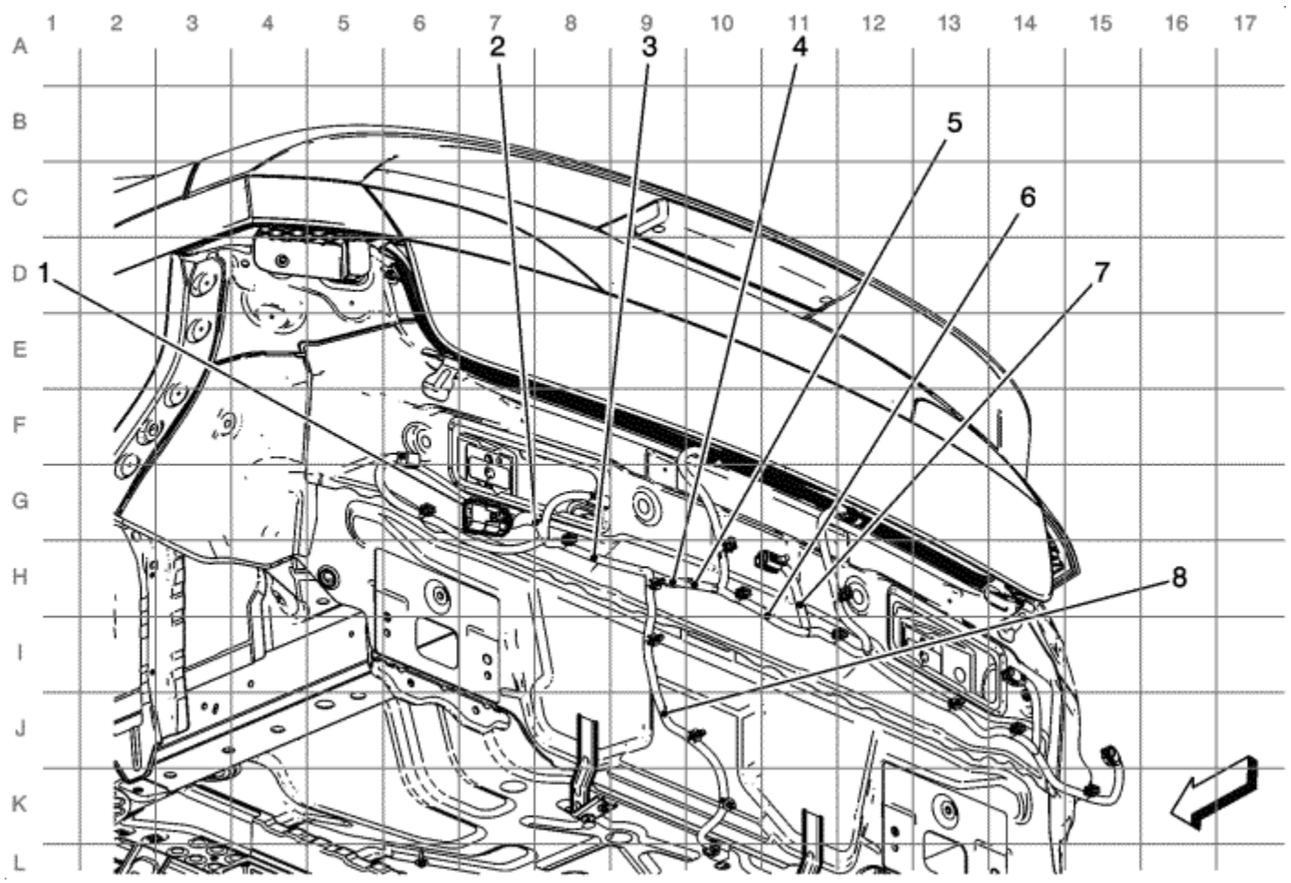

(1) X450 or X451
(2) J452
(3) J453
(4) J454
(5) J455
(6) J456

(7) J457
(8) J451

© Copyright Chevrolet. All rights reserved

Left Rear of Vehicle Harness Routing

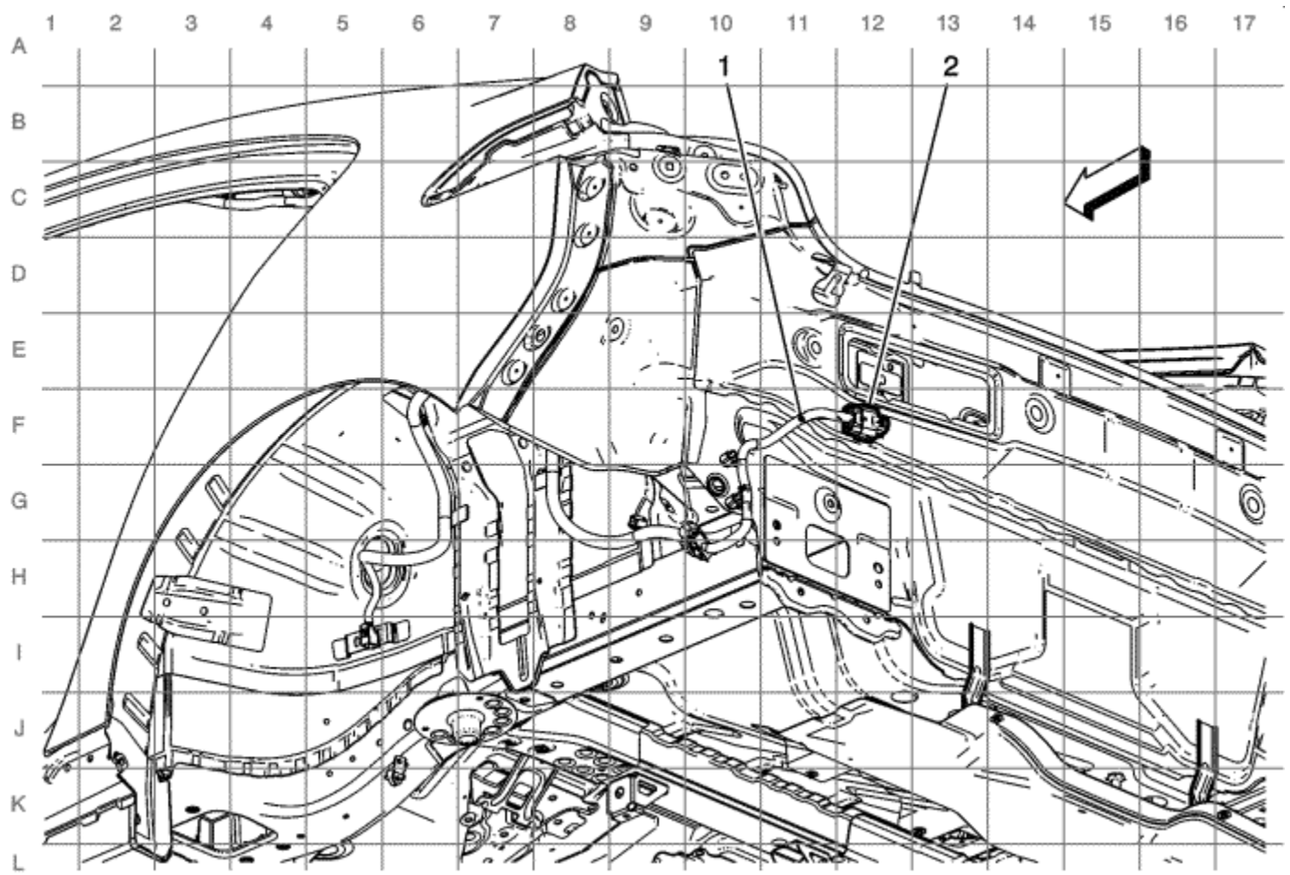

(1) J450
(2) X450 or X451

© Copyright Chevrolet. All rights reserved

Underbody Harness Routing

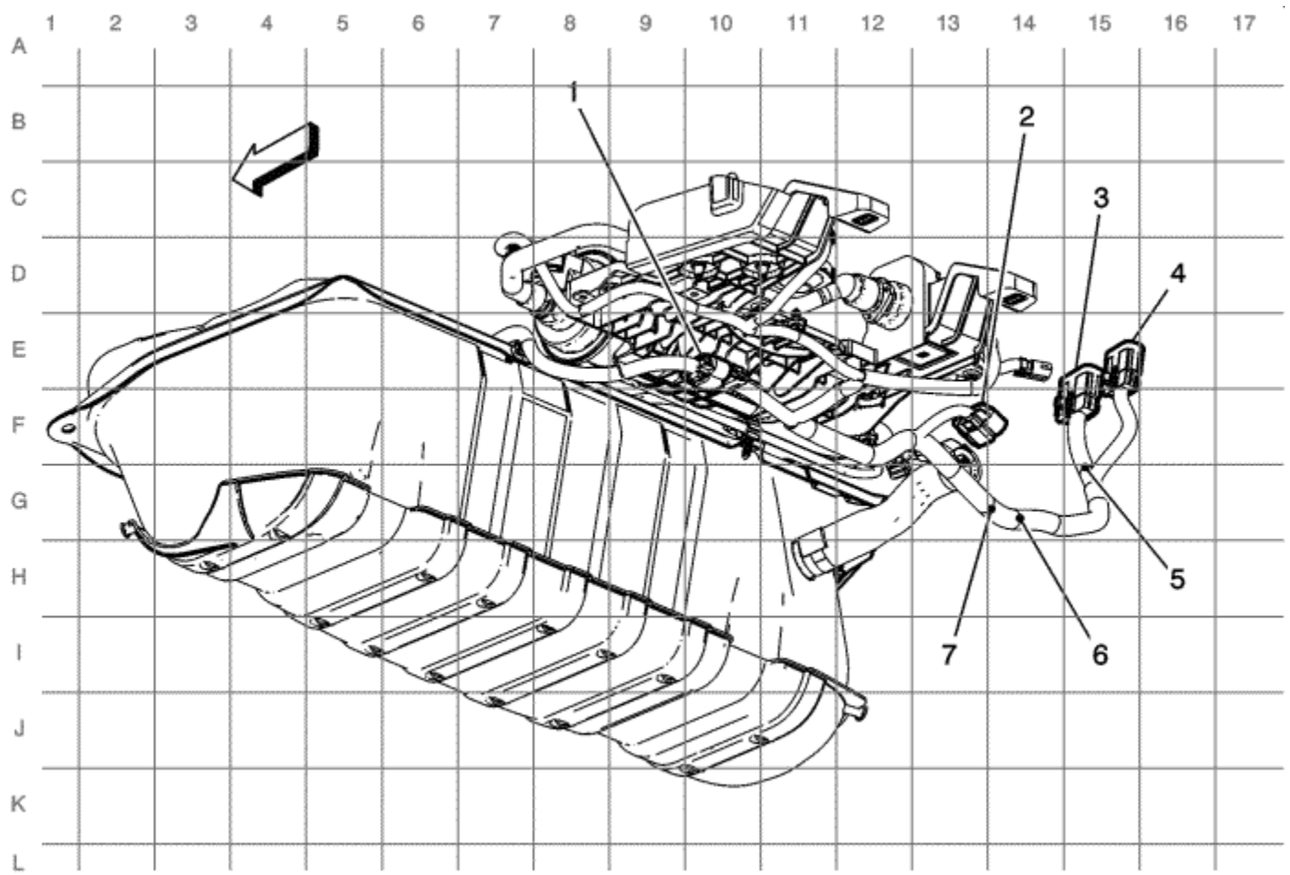

(1) X354
(2) X355
(3) X350
(4) X351
(5) J375
(6) J376

(7) J377

© Copyright Chevrolet. All rights reserved

High Voltage Cable Routing

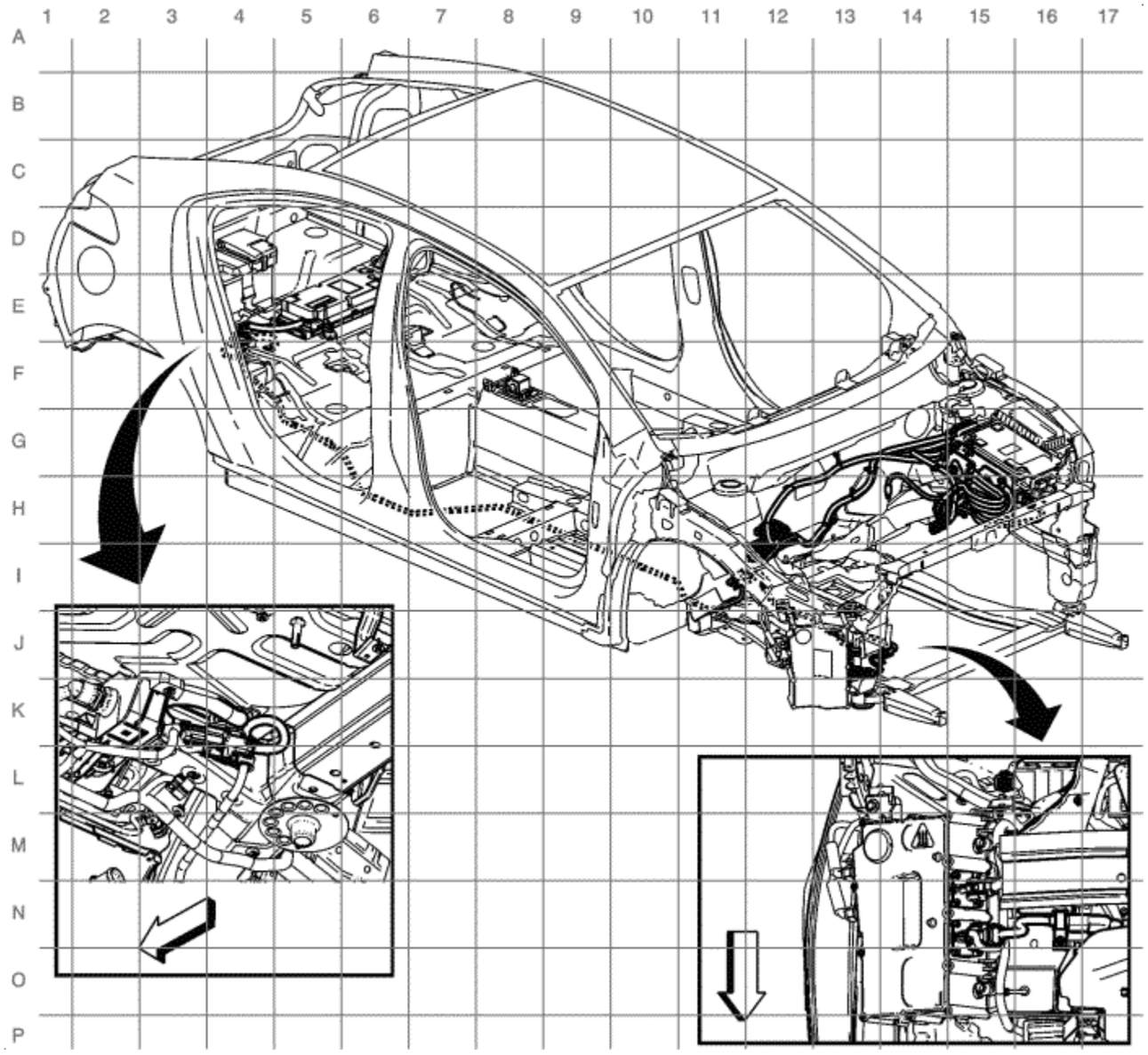

© Copyright Chevrolet. All rights reserved

X50A Fuse Block - Underbonnet Bussing

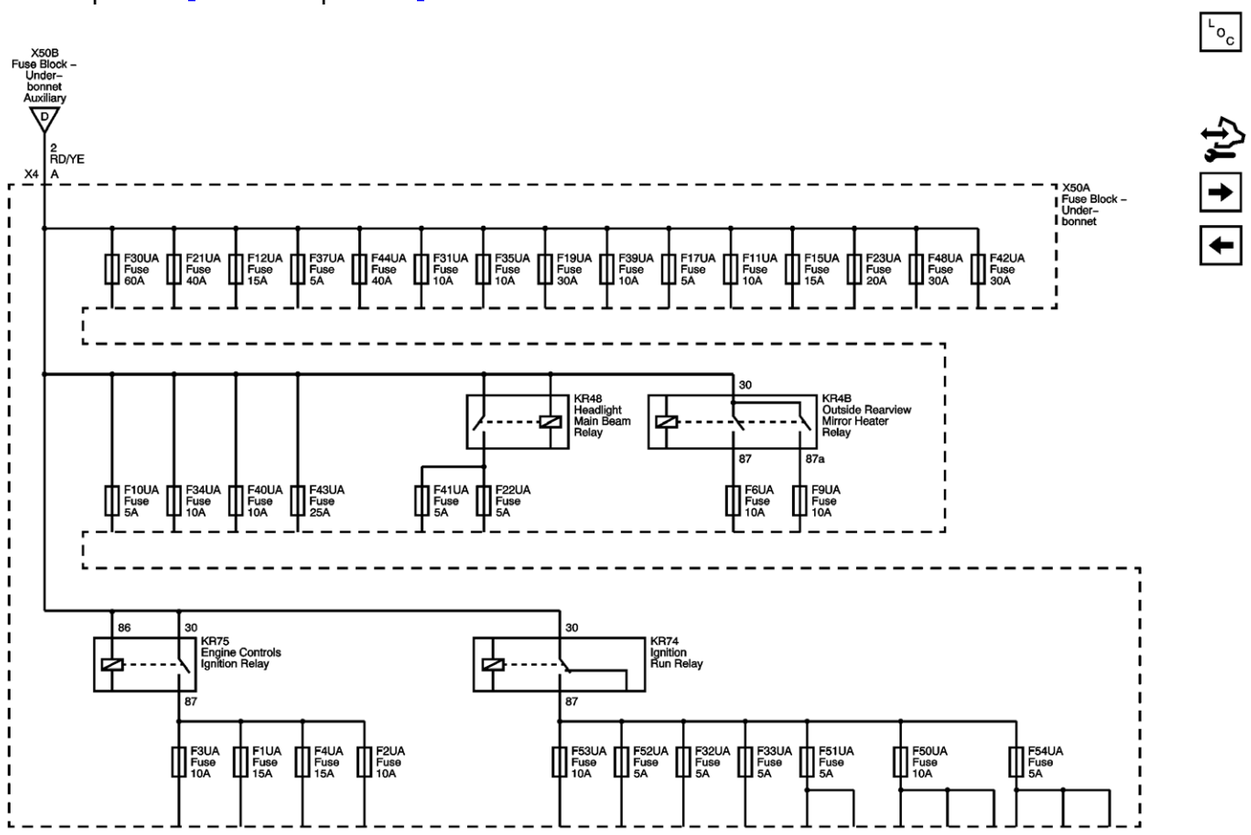

Master Electrical Component List

F32UA, F33UA, F50UA, F51UA, F52UA, F53UA and F54UA Fuses

X50D Fuse Block - Battery and X50B Fuse Block - Underbonnet Auxiliary Bussing

2011 GMT610 Express Exterior Lights Schematics - Direction Indicator Controls and Front Direction Indicator Lamps

Full Beam

Demister

Power, Earth, MIL and Data Communication

© Copyright Chevrolet. All rights reserved

S83 Vehicle On/Off Switch

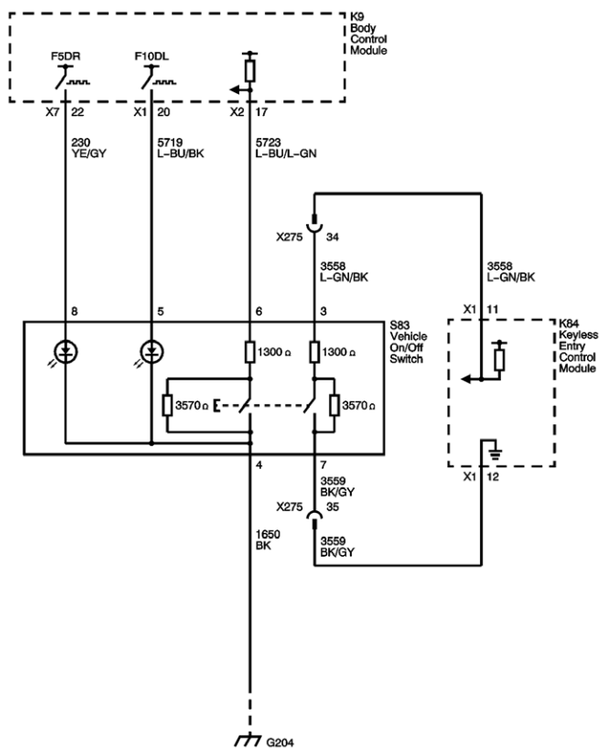

© Copyright Chevrolet. All rights reserved

F1UA, F2UA, F3UA, F4UA, F21UA, F30UA and F34UA Fuses

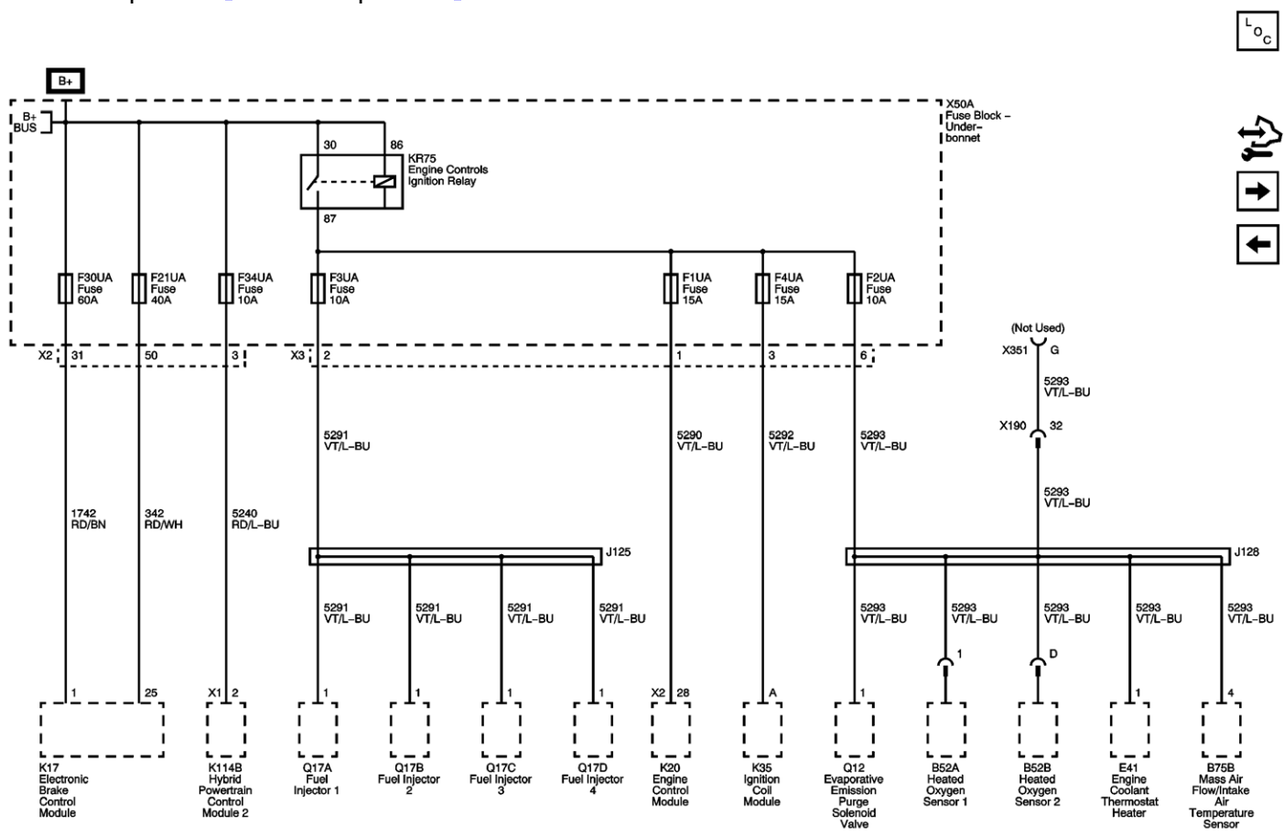

Master Electrical Component List

F6UA, F9UA, F22UA, F23UA, F40UA, F41UA and F43UA Fuses

F32UA, F33UA, F50UA, F51UA, F52UA, F53UA and F54UA Fuses

Power, Earth, MIL and Data Communication

© Copyright Chevrolet. All rights reserved

F10UA, F11UA, F12UA, F15UA, F17UA, F19UA and F39UA Fuses

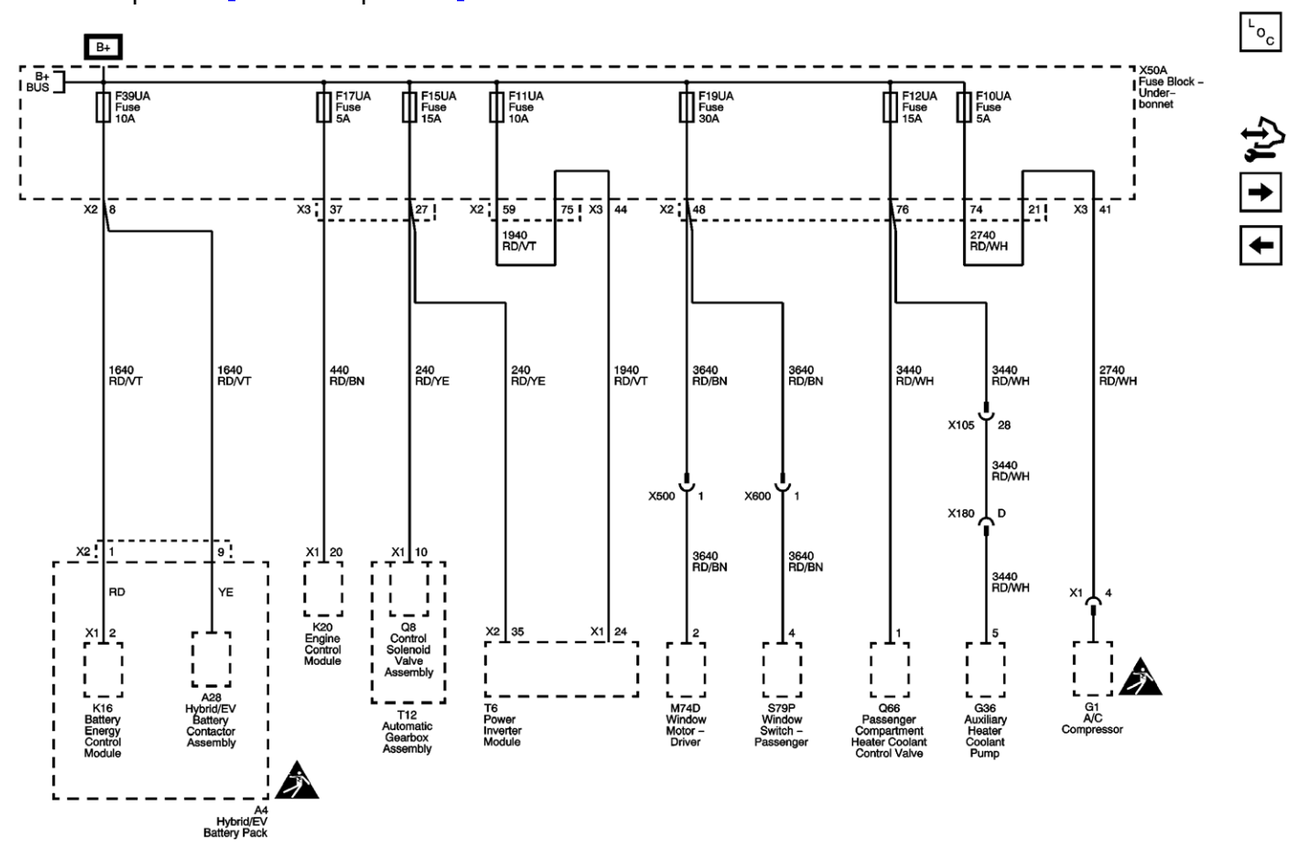

Master Electrical Component List

F31UA, F35UA, F37UA, F42UA, F44UA and F48UA Fuses

F6UA, F9UA, F22UA, F23UA, F40UA, F41UA and F43UA Fuses

Master Electrical Schematic Icons

© Copyright Chevrolet. All rights reserved

F31UA, F35UA, F37UA, F42UA, F44UA and F48UA Fuses

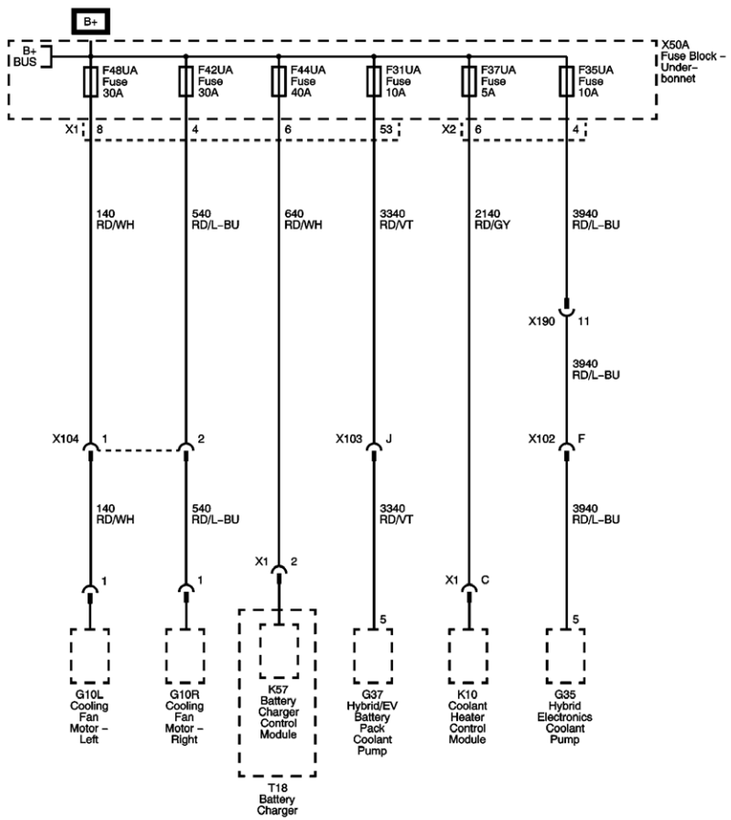

Master Electrical Component List

F1DL, F2DL, F3DL, F4DL, F5DL, F6DL, F7DL, F10DL, F11DL and F15DL Fuses

F10UA, F11UA, F12UA, F15UA, F17UA, F19UA and F39UA Fuses

© Copyright Chevrolet. All rights reserved

Cigarette Lighter/Power Outlets

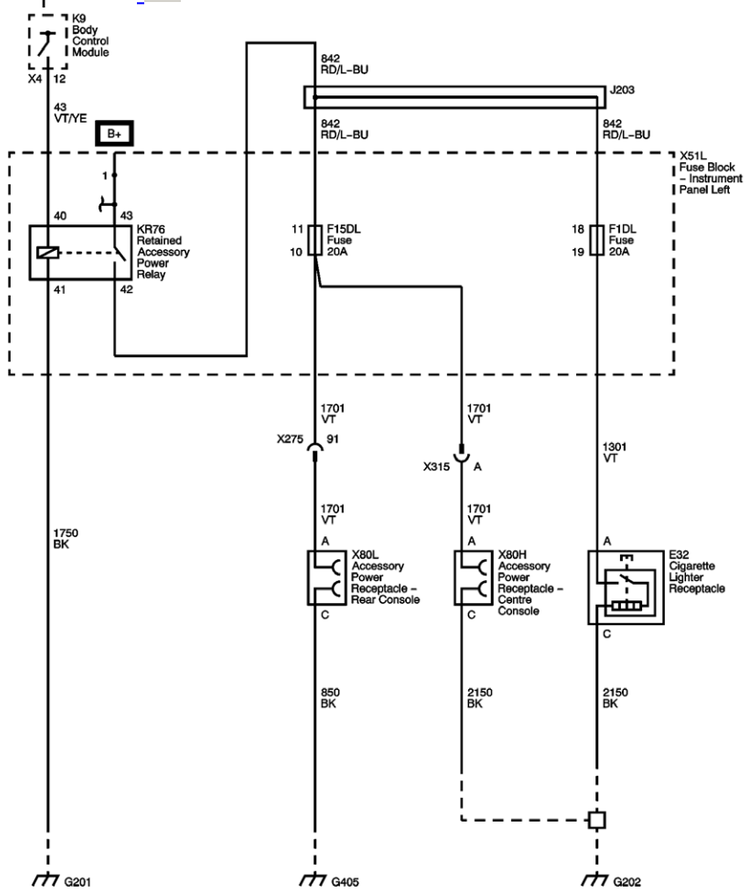

Master Electrical Component List

F1DL, F2DL, F3DL, F4DL, F5DL, F6DL, F7DL, F10DL, F11DL and F15DL Fuses

G201, G203, G205, G304, G401 and G404

G405

G201, G203, G205, G304, G401 and G404

© Copyright Chevrolet. All rights reserved

G302

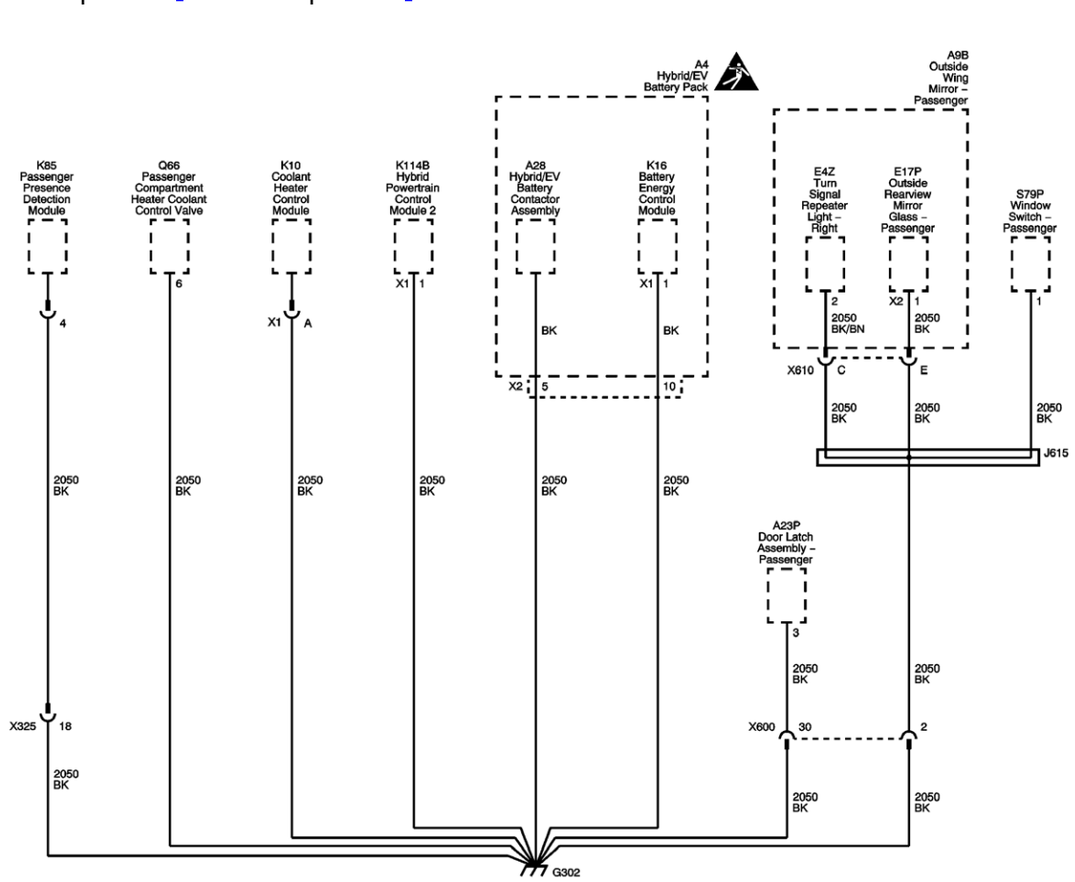
A4
Hybrid/EV
Battery Pack
A9B
Outside
Wing
Mirror –
Passenger
K85
Passenger
Presence
Detection
Module
Q66
Passenger
Compartment
Heater Coolant
Control Valve
K10
Coolant
Heater
Control
Module
K114B
Hybrid
Powertrain
Control
Module 2
A28
Hybrid/EV
Battery
Contactor
Assembly
K16
Battery
Energy
Control
Module
E4Z
Turn
Signal
Repeater
Light –
Right
E17P
Outside
Rearview
Mirror
Glass –
Passenger
S79P
Window
Switch –
Passenger
4
6
X1
A
X1
1
BK
X1
1
BK
2
2050
BK/BN
X2
1
2050
BK
1
X2
5
10
X610
C
E
2050
BK
2050
BK
2050
BK
J615
2050
BK
2050
BK
2050
BK
2050
BK
2050
BK
2050
BK
A23P
Door Latch
Assembly –
Passenger
3
2050
BK
2050
BK
X325
18
X600
30
2
2050
BK
2050
BK
2050
BK
2050
BK
G302

Master Electrical Component List

G403

G301 and G406

Master Electrical Schematic Icons

© Copyright Chevrolet. All rights reserved

A4 Hybrid/EV Battery Pack X1

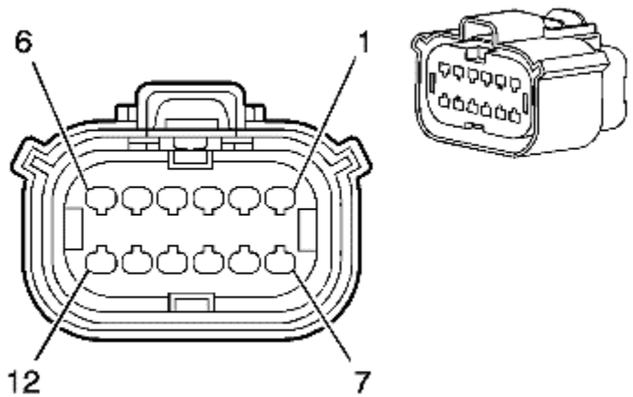

Connector Part Information

Harness Type: Body
OEM Connector: 33472-1201
Service Connector: 13577543
Description: 12-Way F MX150 Series, Sealed (BK)

Terminal Part Information

Terminated Lead: Pending
Release Tool: J-38125-217
Diagnostic Test Probe: J-35616-14 (GN)

A4 Hybrid/EV Battery Pack X1

Pin	Size	Colour	Circuit	Function	Option
1	0.5	L-BU/L-GN	6433	CAN Bus High Serial Data	-
2	0.5	BN/L-GN	3959	High-Voltage Battery 1 (+) Relay Control	--
3	0.5	WH	6432	CAN Bus Low Serial Data	-
4	0.5	VT/GY	3961	High-Voltage Battery (-) Relay Control	--
5	0.5	L-BU/BN	3787	High-Voltage Energy Management Communication Enable	--
6	0.5	GY/L-BU	3960	High-Voltage Battery 2 (+) Relay Control	--

7	0.5	YE/VT	3962	High-Voltage Battery 3 (+) Relay Control	--
8	--	--	--	Not Used	--
9	0.5	WH/BN	3963	High-Voltage Battery 3 (-) Relay Control	-
10	--	--	--	Not Used	--
11	0.5	GY/L-BU	5137	Precharge Relay PWM Signal	-
12	--	--	--	Not Used	--

© Copyright Chevrolet. All rights reserved

A4 Hybrid/EV Battery Pack X2

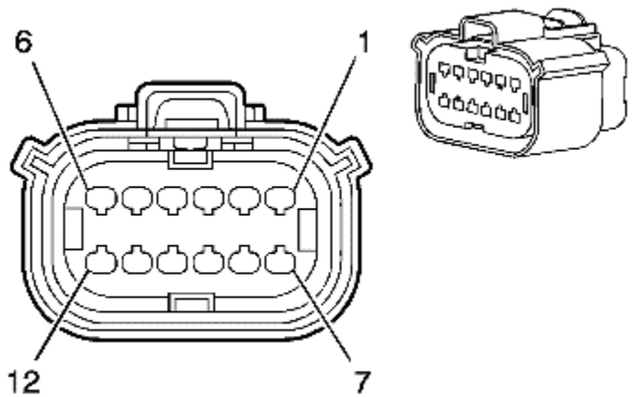

Connector Part Information

Harness Type: Body
OEM Connector: 33472-1254
Service Connector: 13577544
Description: 12-Way F MX150 Series, Sealed (GY)

Terminal Part Information

Terminated Lead: Pending
Release Tool: J-38125-217
Diagnostic Test Probe: J-35616-14 (GN)

A4 Hybrid/EV Battery Pack X2

Pin	Size	Colour	Circuit	Function	Option
1	0.5	RD/VT	1640	Battery Positive Voltage	-
2	0.5	VT	3195	Auxiliary Heater Control	-
3	0.5	L-BU/WH	3977	Accessory Wake-up Serial Data 2	-
4	0.5	VT/GY	139	Run/Crank Ignition 1 Voltage	--
5	0.5	BK	2050	Ground	--
6	0.5	L-BU/GY	5139	High-Voltage Fault Signal	--

7	0.5	L-BU	2500	High Speed GMLAN Serial Data (+) (1)	-
8	0.5	WH	2501	High Speed GMLAN Serial Data (-) (1)	-
9	0.5	RD/VT	1640	Battery Positive Voltage	-
10	0.5	BK	2050	Ground	--
11	0.5	L-BU	2500	High Speed GMLAN Serial Data (+) (1)	-
12	0.5	WH	2501	High Speed GMLAN Serial Data (-) (1)	-

© Copyright Chevrolet. All rights reserved

A4 Hybrid/EV Battery Pack X3

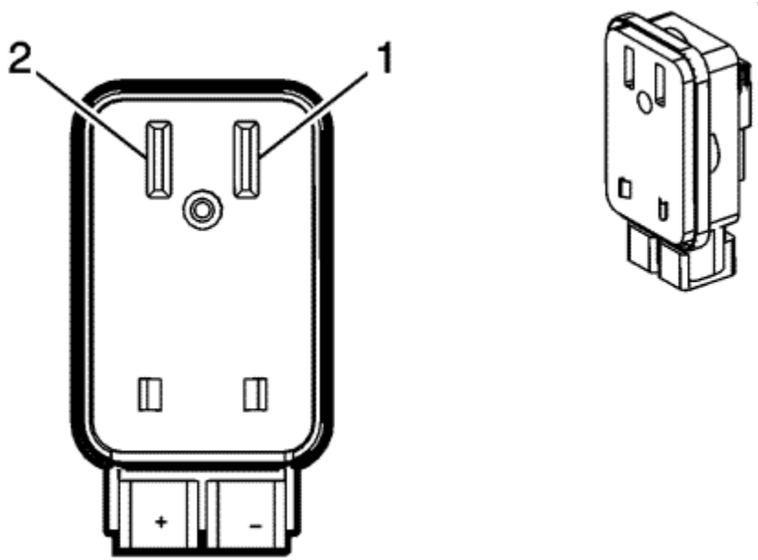

Connector Part Information

Harness Type: High Voltage
OEM Connector: 13505764
Service Connector: Service by Harness - See Part Catalog
Description: 2-Way (Metal)

Terminal Part Information

Terminated Lead: Service by Harness - See Part Catalog
Release Tool: Service by Harness - See Part Catalog
Diagnostic Test Probe: Service by Harness - See Part Catalog

A4 Hybrid/EV Battery Pack X3

Pin	Size	Colour	Circuit	Function	Option
1	35	OG	5083	High-Voltage Battery (-)	-
2	35	OG	5084	High-Voltage Battery (+)	-

© Copyright Chevrolet. All rights reserved

A4 Hybrid/EV Battery Pack X4

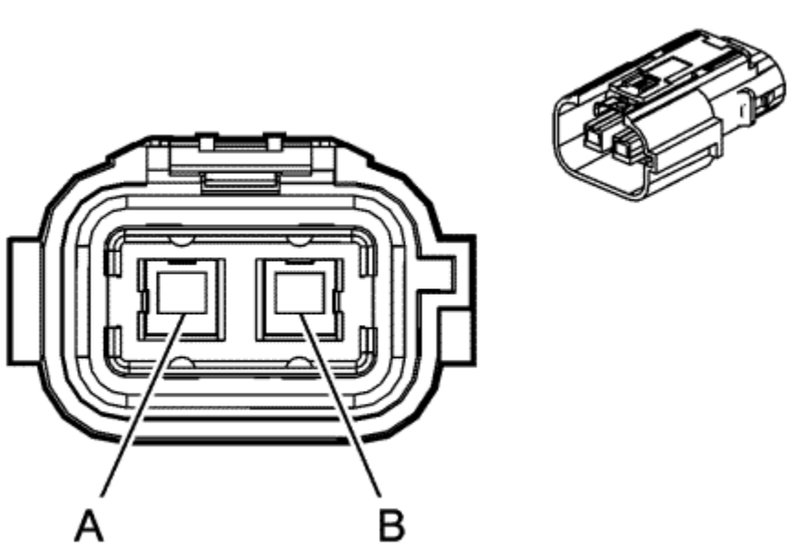

Connector Part Information

Harness Type: High Voltage
OEM Connector: 13737728
Service Connector: Service by Harness - See Part Catalog
Description: 2-Way F (OG)

Terminal Part Information

Terminated Lead: Service by Harness - See Part Catalog
Release Tool: Service by Harness - See Part Catalog
Diagnostic Test Probe: Service by Harness - See Part Catalog

A4 Hybrid/EV Battery Pack X4

Pin	Size	Colour	Circuit	Function	Option
A	2.0	OG	5084	High-Voltage Battery (+)	-
B	2.0	OG	5083	High-Voltage Battery (-)	-

© Copyright Chevrolet. All rights reserved

A4 Hybrid/EV Battery Pack X5

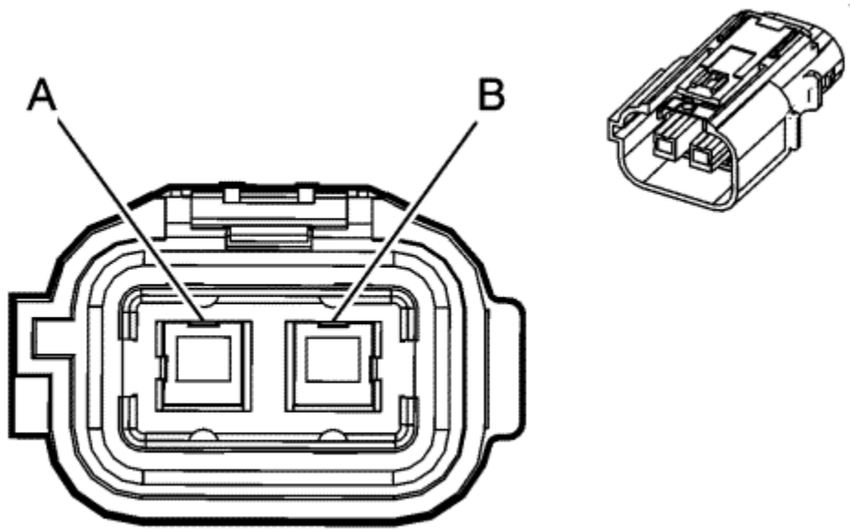

Connector Part Information

Harness Type: High Voltage
OEM Connector: 13737729
Service Connector: Service by Harness - See Part Catalog
Description: 2-Way F (OG)

Terminal Part Information

Terminated Lead: Service by Harness - See Part Catalog
Release Tool: Service by Harness - See Part Catalog
Diagnostic Test Probe: Service by Harness - See Part Catalog

A4 Hybrid/EV Battery Pack X5

Pin	Size	Colour	Circuit	Function	Option
A	2.0	OG	5084	High-Voltage Battery (+)	-
B	2.0	OG	5083	High-Voltage Battery (-)	-

© Copyright Chevrolet. All rights reserved

A4 Hybrid/EV Battery Pack X6

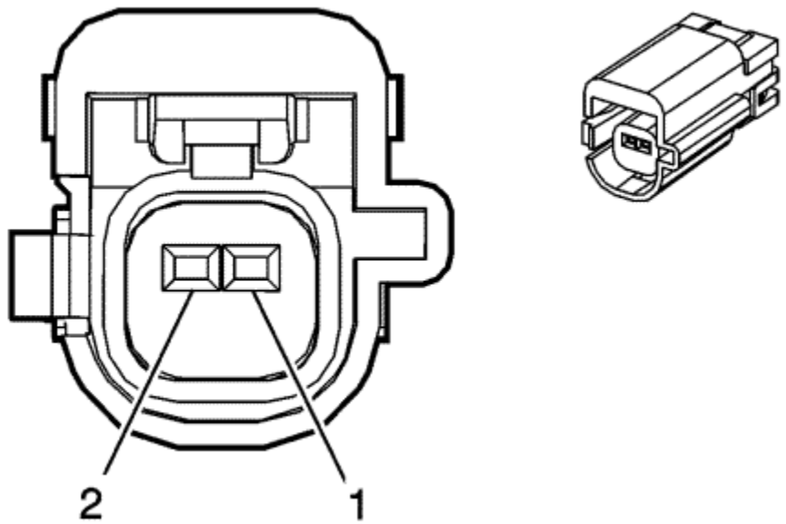

Connector Part Information

Harness Type: Body
OEM Connector: 13738743
Service Connector: 13577520
Description: 2-Way F (BK)

Terminal Part Information

Terminated Lead: Service by Connector Assembly - 13577520
Release Tool: Pending
Diagnostic Test Probe: Pending

A4 Hybrid/EV Battery Pack X6

Pin	Size	Colour	Circuit	Function	Option
1	0.5	BK/BN	5088	Low Reference	-
2	0.5	VT	5087	High-Voltage Interlock Loop Signal (1)	-

© Copyright Chevrolet. All rights reserved

A4 Hybrid/EV Battery Pack X7

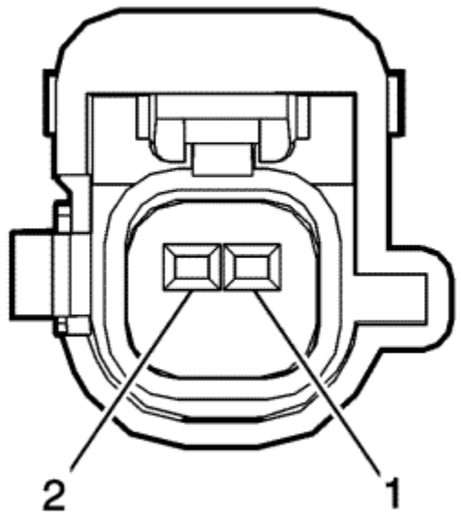

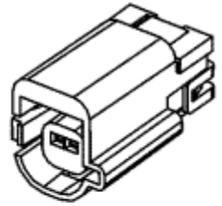

Connector Part Information

Harness Type: Body
OEM Connector: 13738744
Service Connector: 13577521
Description: 2-Way F (GY)

Terminal Part Information

Terminated Lead: Service by Connector Assembly - 13577521
Release Tool: Pending
Diagnostic Test Probe: Pending

A4 Hybrid/EV Battery Pack X7

Pin	Size	Colour	Circuit	Function	Option
1	0.5	GY/VT	5595	High-Voltage Interlock Loop Signal (2)	-
2	0.5	BK/VT	5596	Low Reference	-

© Copyright Chevrolet. All rights reserved

Underbody - Fuel System Components

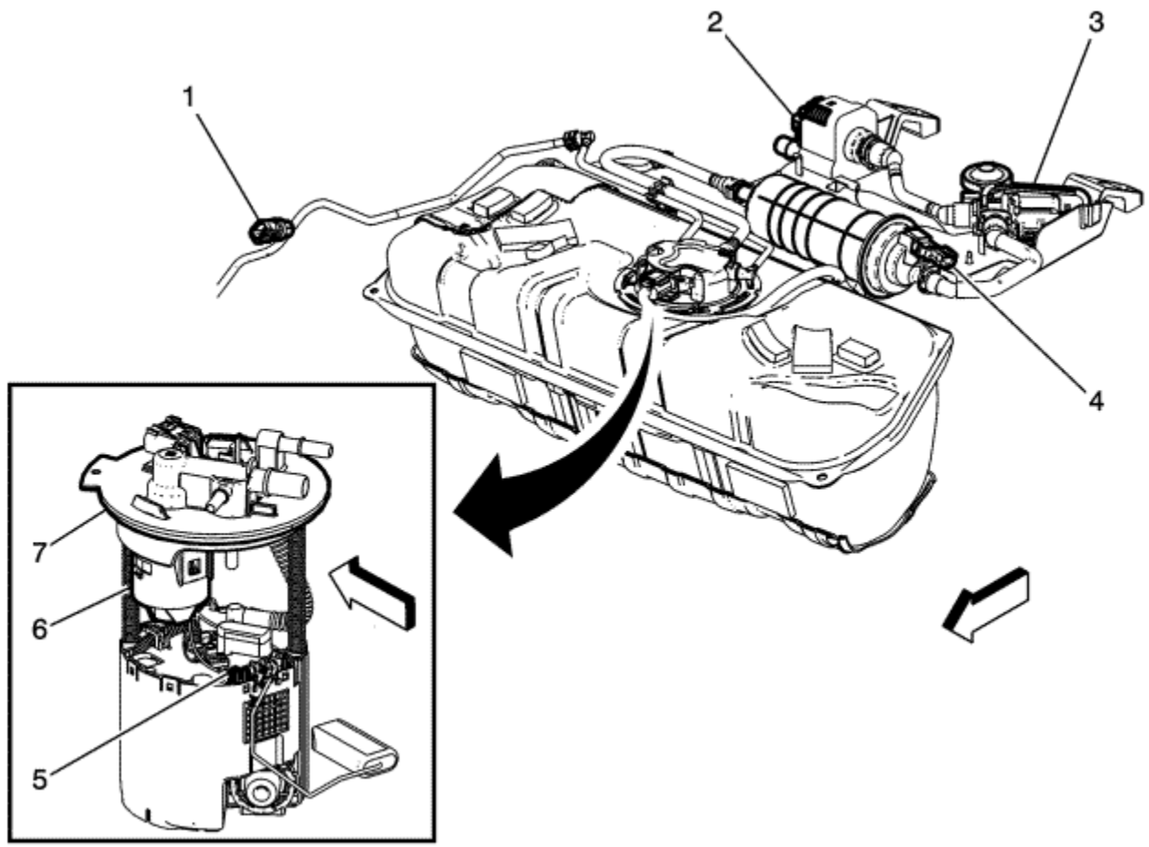

(1) B47 Fuel Pressure Sensor
(2) Q63 Evaporative Emission System Leak Detection Pump Assembly
(3) Q13 Evaporative Emission Vent Solenoid Valve
(4) B150 Fuel Tank Pressure Sensor
(5) B46 Fuel Level Sensor
(6) G12 Fuel Pump

(7) A7 Fuel Pump and Level Sensor Assembly

© Copyright Chevrolet. All rights reserved

A7 Fuel Pump and Level Sensor Assembly

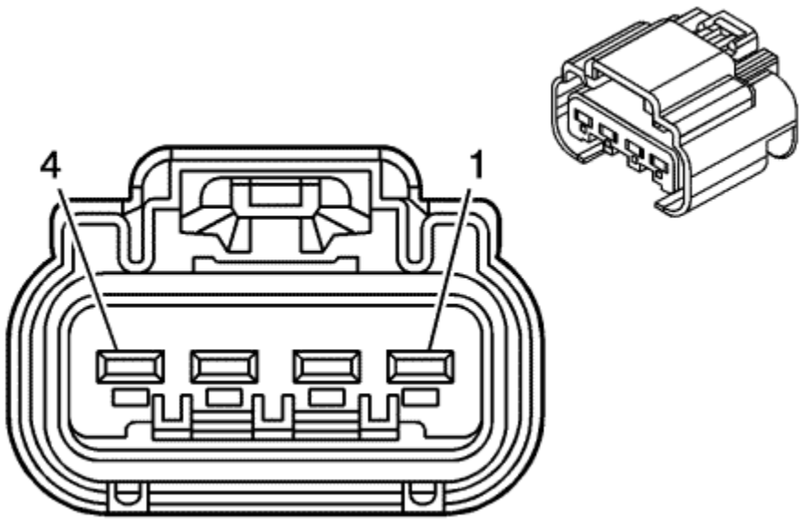

Connector Part Information

Harness Type: Fuel Pump
OEM Connector: 88988992
Service Connector: 19257373
Description: 4-Way F GT 280 Series, Sealed (WH)

Terminal Part Information

Terminated Lead: Pins 3, 4 - 13327132
Terminated Lead: Pins 1, 2 - 13575405
Release Tool: J-38125-553
Diagnostic Test Probe: J-35616-4A (PU)

A7 Fuel Pump and Level Sensor Assembly

Pin	Size	Colour	Circuit	Function	Option
1	1	GY	120	Fuel Pump Supply Voltage	-
2	1	BK/L-GN	1580	Low Reference	--
3	0.5	BK/L-GN	6281	Low Reference	-
4	0.5	L-BU/VT	1589	Primary Fuel Level Sensor Signal	-

© Copyright Chevrolet. All rights reserved

Driver Door Components

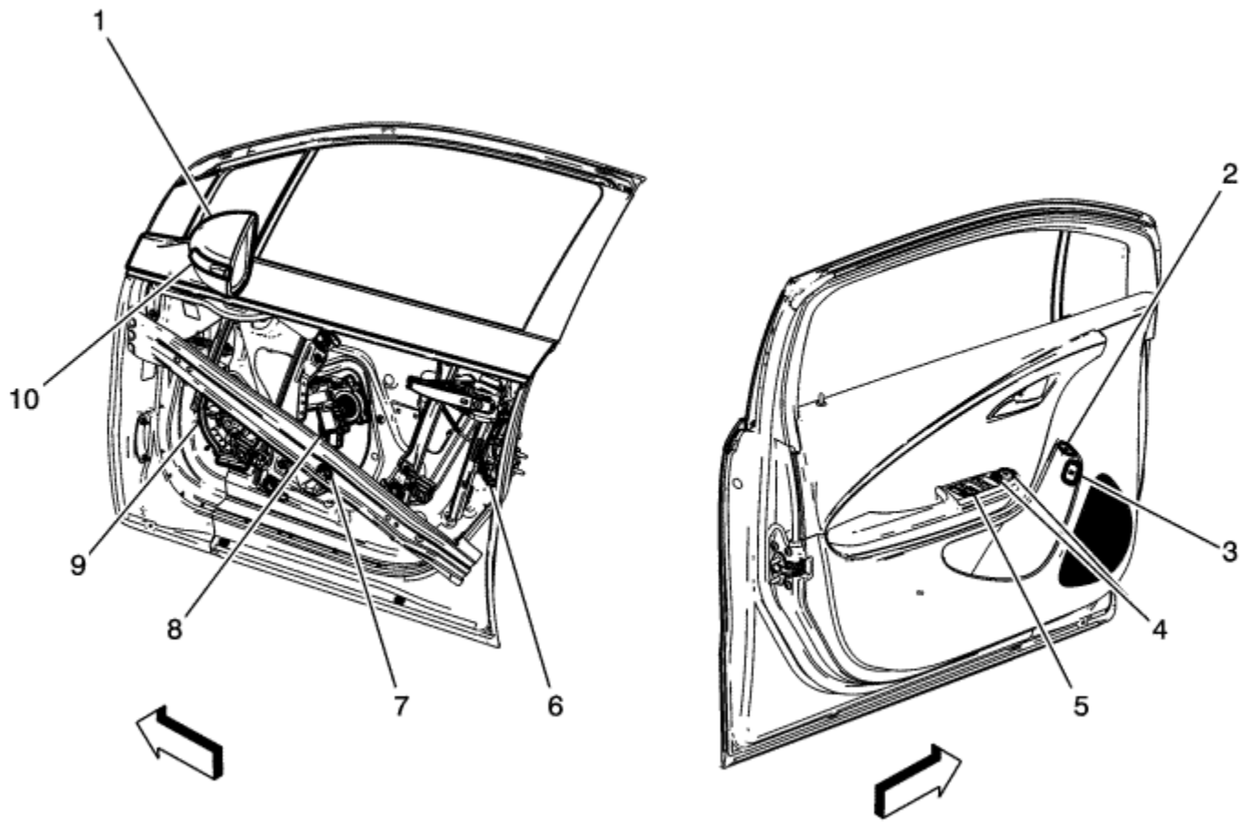

(1) A9A Outside Rear-view Mirror - Driver
(2) S117 Refuel Request Switch
(3) S113 Charge Port Door Open Request Switch
(4) S52 Outside Rear-view Mirror Switch
(5) S79D Window Switch - Driver
(6) A23C Door Catch Assembly - Driver

(7) B63LF Side Impact Sensor - Left Front
(8) M74D Window Motor - Driver
(9) P19AG Speaker - Left Front Door
(10) E4Y Indicator Repeater Lamp - Left

© Copyright Chevrolet. All rights reserved

Passenger Door Components

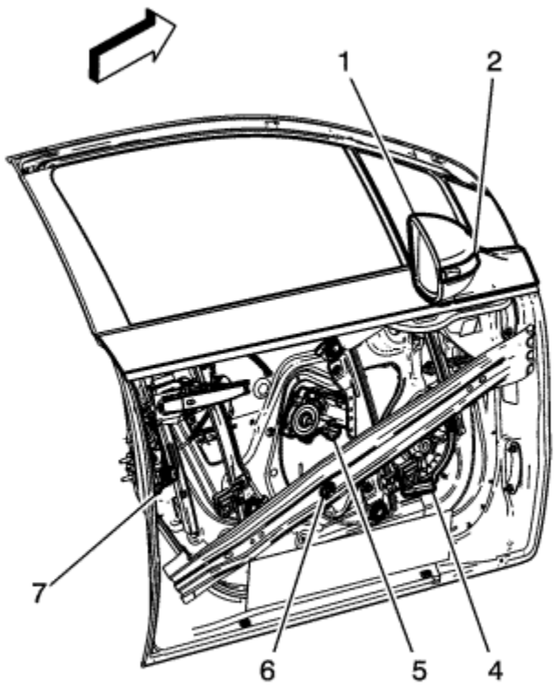

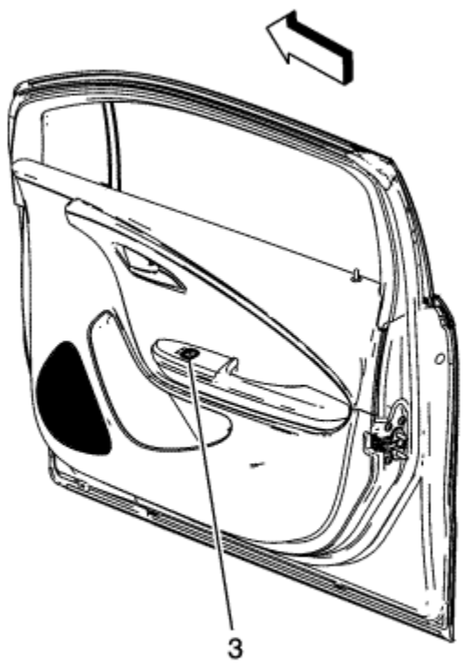

(1) A9B Outside Rear-view Mirror - Passenger
(2) E4Z Indicator Repeater Lamp - Right
(3) S79P Window Switch - Passenger
(4) P19AH Speaker - Right Front Door
(5) M74P Window Motor - Passenger
(6) B63RF Side Impact Sensor - Right Front

(7) A23P Door Catch Assembly - Passenger

© Copyright Chevrolet. All rights reserved

Volt

Headliner Components

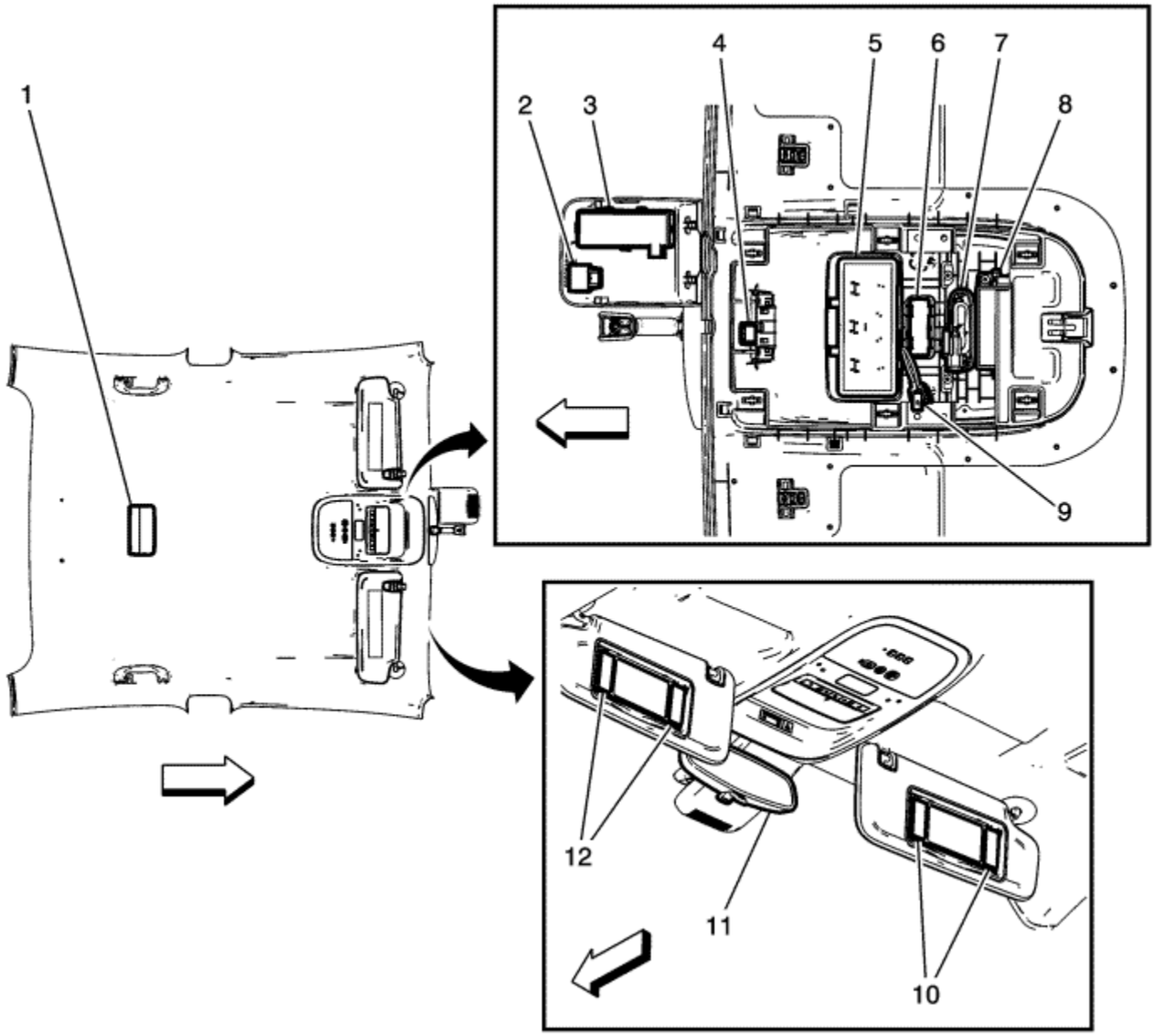

(1) E36AH Interior light
(2) B160 Windscreen Temperature and Inside Moisture Sensor
(3) K77 Remote Control Door Lock Receiver
(4) P14 Passenger Air Bag Disable Indicator
(5) E37F Dome/Reading Lamps - Front
(6) S48B Multi-Function Switch - Overhead Console

(7) S51 Telematics Button Assembly
(8) S25 Garage Door Opener
(9) B24 Cellular Phone Microphone
(10) E31R Sunshade Mirror Lamp - Right
(11) A10 Inside Rearview Mirror
(12) E31L Sunshade Mirror Lamp - Left

© Copyright Chevrolet. All rights reserved

A10 Inside Rearview Mirror

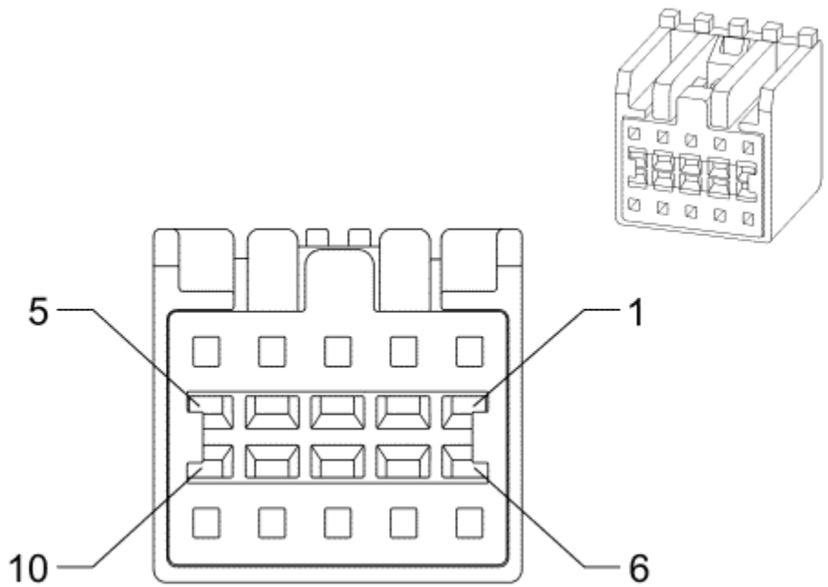

Connector Part Information

Harness Type: Headliner
OEM Connector: 13641322
Service Connector: 19177676
Description: 10-Way F Kaizen 0.64 Series (BK)

Terminal Part Information

Terminated Lead: 13575867
Release Tool: J-38125-215A
Diagnostic Test Probe: J-35616-64B (L-BU)

A10 Inside Rearview Mirror

Pin	Size	Colour	Circuit	Function	Option
1	0.35	L-GN/WH	1324	Reverse Lamp Supply Voltage	--

2	0.35	VT/L-GN	39	Run/Crank Ignition 1 Voltage	-
3-4	--	--	--	Not Used	--
5	0.35	BK	1650	Ground	--
6-10	--	--	--	Not Used	-

© Copyright Chevrolet. All rights reserved

Instrument Panel Components (2 of 2)

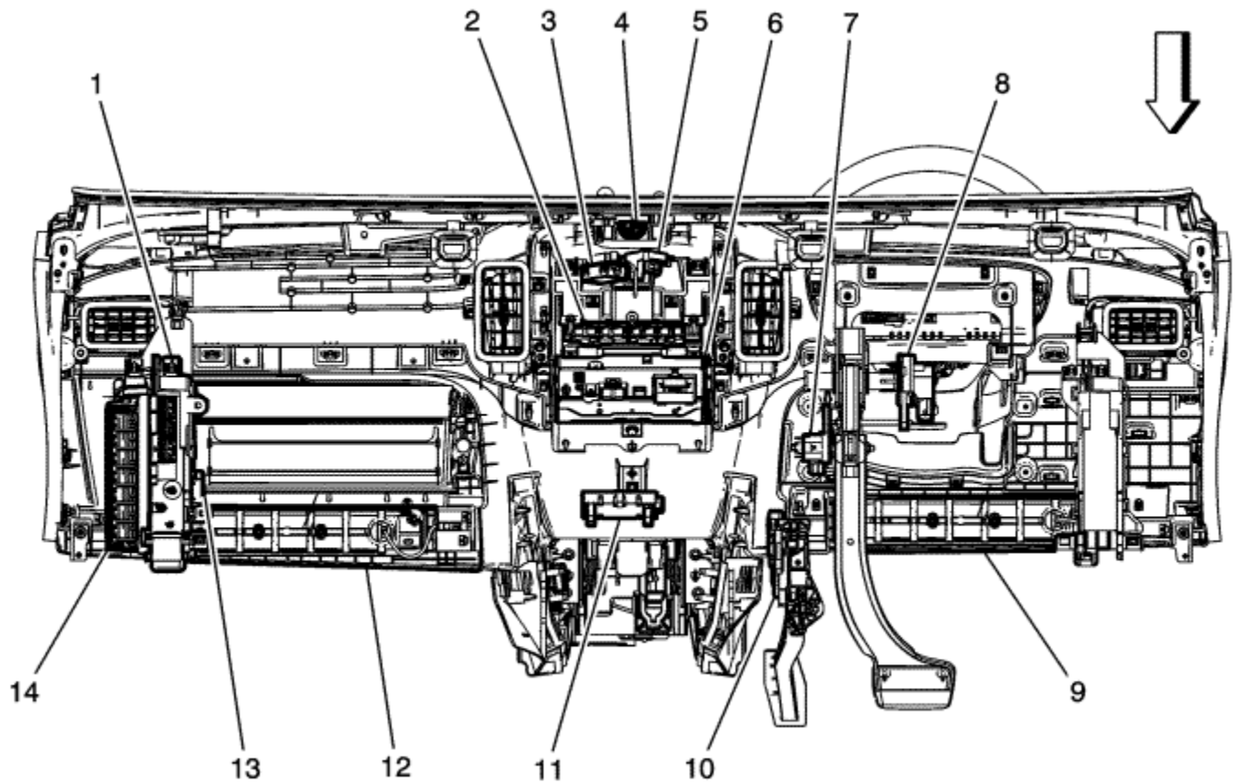

(1) K73 Telematics Communication Interface Control Module
(2) K33 HVAC Control Module
(3) K89 Immobiliser Control Module
(4) E32 Cigarette Lighter Receptacle
(5) B101 Immobiliser Aerial
(6) A11 Radio

(7) B22 Brake Pedal Position Sensor
(8) B201 Brake Control Brake Pedal Position Sensor
(9) F114D Knee Air Bag - Driver's
(10) B107 Accelerator Pedal Position Sensor
(11) T10 Keyless Entry Aerial
(12) F114P Knee Air Bag - Passenger
(13) T15 Navigation Aerial Signal Splitter
(14) K9 Body Control Module

© Copyright Chevrolet. All rights reserved

A11 Radio X1

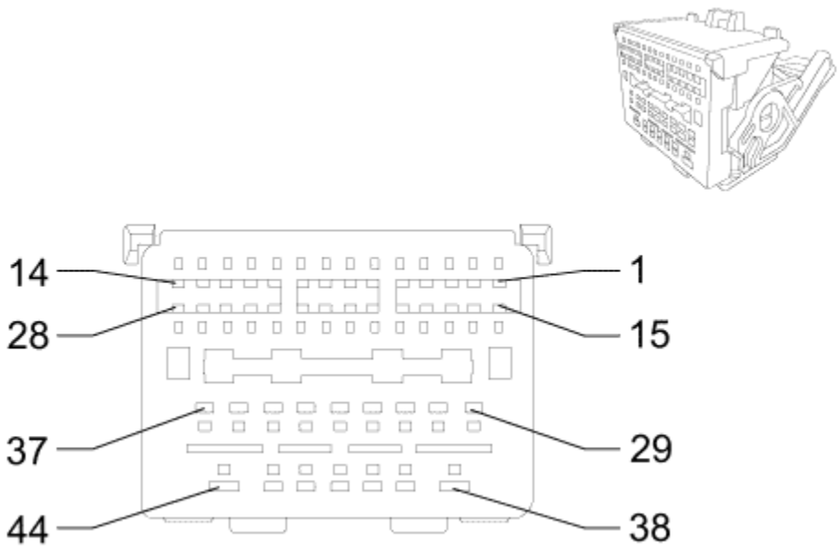

Connector Part Information

Harness Type: Instrument Panel
OEM Connector: RADPB-44-1AK
Service Connector: 88988902
Description: 44-Way F GT 64 Series (BK)

Terminal Part Information

Pins: 2, 3, 6, 9-11, 13, 16, 20, 23, 24, 27, 28
Terminated Lead: 13575845
Release Tool: J-38125-215A
Diagnostic Test Probe: J-35616-64B (L-BU)

Pins: 29-34, 37 and 39-43
Terminated Lead: 13575735
Release Tool: J-38125-553
Diagnostic Test Probe: J-35616-2A (GY)

Pins: 38

Terminated Lead: 13575754
Release Tool: J-38125-553
Diagnostic Test Probe: J-35616-4A (PU)

Pins: 44
Terminated Lead: 13575753
Release Tool: J-38125-553
Diagnostic Test Probe: J-35616-4A (PU)

A11 Radio X1

Pin	Size	Colour	Circuit	Function	Option
1	--	--	--	Not Used	--
2	0.35	YE	7459	Integrated Centre Stack Serial Data Low	--
3	0.5	BK	7460	Integrated Centre Stack Serial Data Shield	-
4-5	--	--	--	Not Used	--
6	0.5	BK/YE	659	Low Reference	-
7-8	--	--	--	Not Used	--
9	0.35	BK	5842	Auxiliary Audio Screen (2)	--
10	0.35	YE	5841	Right Auxiliary Audio Signal (2)	--
11	0.5	L-BU	2060	Auxiliary Detection Signal	-
12	--	--	--	Not Used	--
13	0.5	BK/L-GN	3291	Integrated Centre Stack Wake Up Signal	-
14-15	--	--	--	Not Used	--
16	0.35	L-BU	7458	Centre Integrated Centre Stack Serial Data High	-
17-19	--	--	--	Not Used	--
20	0.5	YE	658	Mobile Telephone Voice Signal	-
21-22	--	--	--	Not Used	--
23	0.35	BK	5843	Auxiliary Audio Common Signal	-
24	0.35	BN	5839	Left Auxiliary Audio Signal (2)	-
25-26	--	--	--	Not Used	--
27	0.5	L-GN/WH	3290	Integrated Centre Stack Reset Signal	-
28	0.5	L-GN	5060	Low Speed GMLAN Serial Data	-
29	0.5	BK	2011	Left Front Audio Drain Wire	-
30	0.5	BK	2099	Left Rear Audio Drain Wire	--

31	0.35	L-BU/BN	1546	Front Low Level Audio (-)	-
32	0.35	BN/L-BU	1947	Left Front Low Level Audio (-)	-
33	0.35	L-BU/BK	1946	Right Rear Low Level Audio (-)	--
34	0.35	BN/VT	1999	Left Rear Low Level Audio (-)	-
35-36	--	--	--	Not Used	--
37	0.5	VT/L-BU	6978	Amplifier Control	--
38	2.5	BK	1450	Ground	-
39	0.35	YE	512	Right Front Low Level Audio Signal	-
40	0.35	L-BU	511	Left Front Low Level Audio Signal	-
41	0.35	BN/WH	546	Right Rear Low Level Audio Signal	-
42	0.35	L-GN/BK	599	Left Rear Low Level Audio Signal	--
43	0.5	L-GN/YE	7066	Entertainment Remote Enable Signal	--
44	1	RD/YE	5040	Battery Positive Voltage	-

© Copyright Chevrolet. All rights reserved

A11 Radio X4

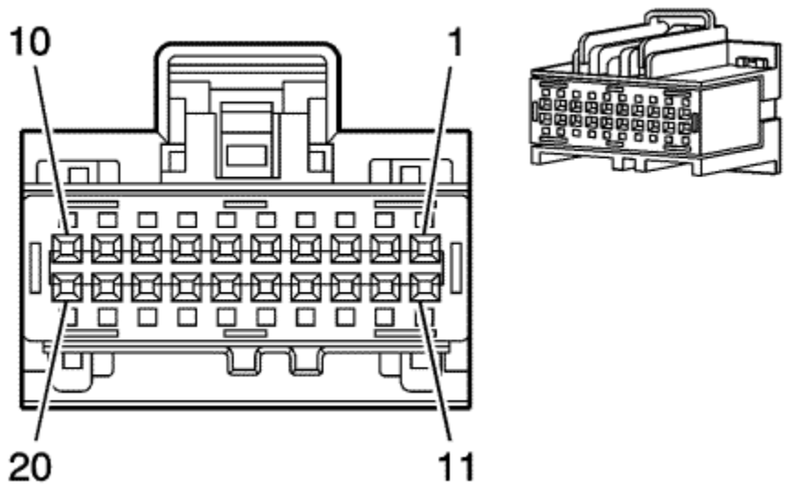

Connector Part Information

Harness Type: Instrument Panel
OEM Connector: 31410-1201
Service Connector: 15126710
Description: 20-Way F 64 Series, Sealed (GY)

Terminal Part Information

Terminated Lead: 13575845
Release Tool: J-38125-215A
Diagnostic Test Probe: J-35616-64B (L-BU)

A11 Radio X4

Pin	Size	Colour	Circuit	Function	Option
1-4	--	--	--	Not Used	--
5	0.35	GY/YE	6972	Camera Signal #2 +	--
6	0.35	GY/YE	5149	Voice Recognition Audio Signal	-
7	--	--	--	Not Used	--

8	0.5	BK	3368	Touch Screen Display Drain Wire	-
9	0.35	VT	3369	Touch Screen Display Signal (+)	--
10	0.35	BN/L-GN	3364	Navigation Display Reset Signal	-
11-14	--	--	--	Not Used	-
15	0.35	WH/L-BU	6973	Camera Signal #2	--
16	0.35	BK/GY	5152	Low Reference	-
17-18	--	--	--	Not Used	--
19	0.35	VT	3370	Touch Screen Display Signal (-)	-
20	0.35	GY/BK	817	Vehicle Speed Signal	-

© Copyright Chevrolet. All rights reserved

Instrument Panel Components (1 of 2)

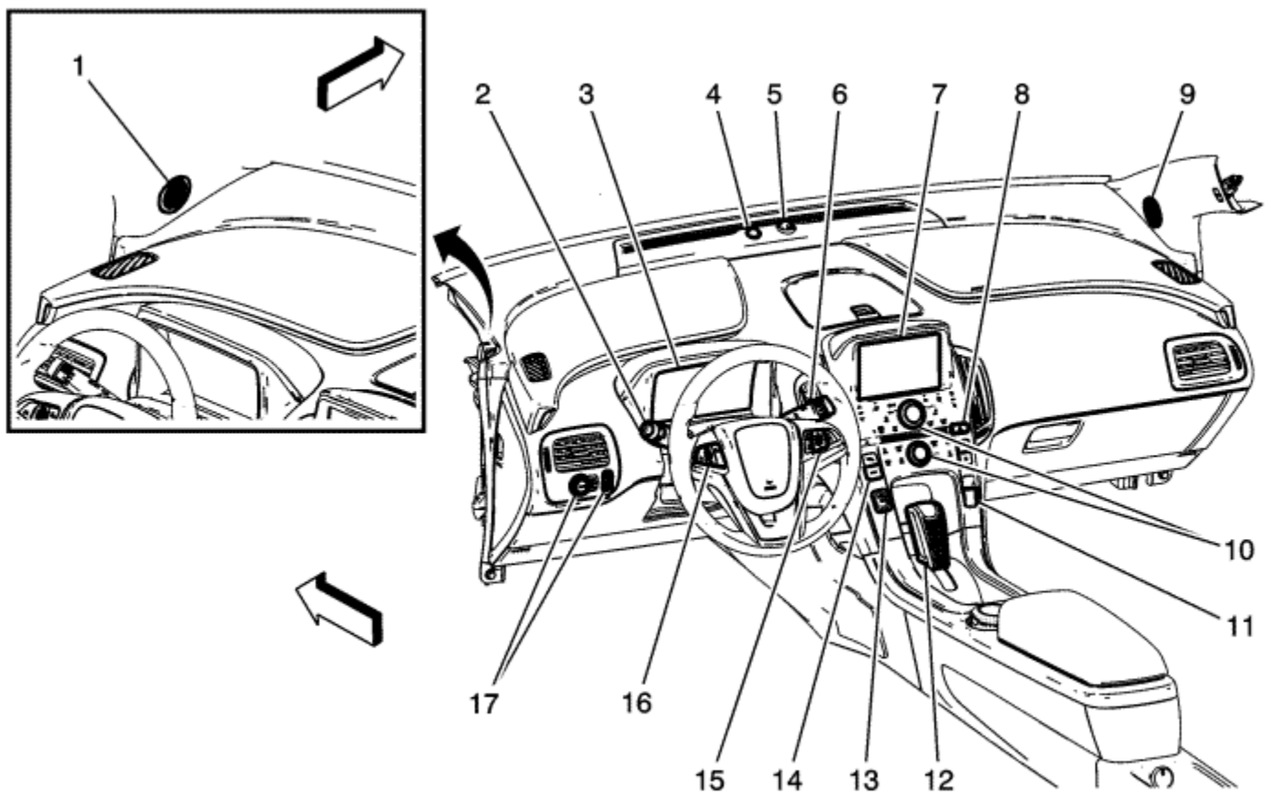

(1) P19H Speaker - Left Front Tweeter
(2) S78 Indicator/Multifunction Switch
(3) P16 Instrument Cluster
(4) P36 Battery State of Charge Indicator
(5) B10B Ambient Light/Sunload Sensor
(6) S82 Windscreen Wiper/Washer Switch

(7) P17 Info Display Module
(8) S26 Hazard Warning Switch
(9) P19V Speaker - Right Front Tweeter
(10) A20 Radio/HVAC Controls
(11) S91 Park Brake Control Switch
(12) S3 Transmission Shift Lever
(13) S83 Vehicle On/Off Switch
(14) S109 Sport Mode Switch
(15) S70R Steering Wheel Controls Switch - Right
(16) S70L Steering Wheel Controls Switch - Left
(17) S16 Driver Information Centre Switch

© Copyright Chevrolet. All rights reserved

A20 Radio/HVAC Control

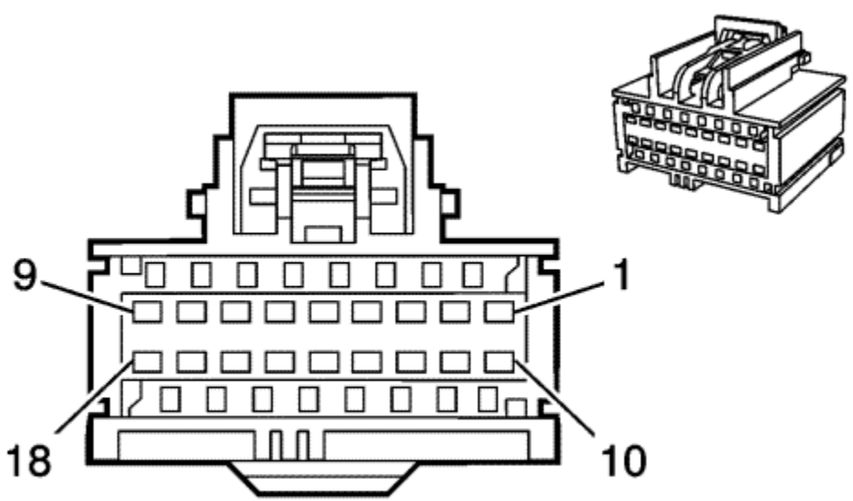

Connector Part Information

Harness Type: Instrument Panel
OEM Connector: 7283-4545
Service Connector: 13576645
Description: 18-Way F Kaizen 64 Series (WH)

Terminal Part Information

Terminated Lead: 13575845
Release Tool: J-38125-215A
Diagnostic Test Probe: J-35616-64B (L-BU)

A20 Radio/HVAC Control

Pin	Size	Colour	Circuit	Function	Option
1	0.35	YE	7459	Integrated Centre Stack Serial Data Low	--
2	0.35	L-BU	7458	Centre Integrated Centre Stack Serial Data High	--
3	0.5	BK	7460	Integrated Centre Stack Serial Data Shield	-

4	0.5	BK/L-GN	3291	Integrated Centre Stack Wake Up Signal	-
5-7	--	--	--	Not Used	--
8	0.5	L-GN/YE	7531	Linear Interconnect Network Bus 9	-
9	--	--	--	Not Used	--
10	0.5	RD/L-GN	742	Battery Positive Voltage	--
11	0.35	YE	7556	Lighting Control Switch Reference	--
12	0.5	BN/YE	780	Driver Door Lock Switch Lock Signal	-
13	0.5	BN/WH	781	Driver Door Lock Switch Unlock Signal	-
14	0.35	BK/VT	3109	Low Reference	--
15	0.5	L-GN/WH	3290	Integrated Centre Stack Reset Signal	-
16	0.5	L-GN/WH	111	Hazard Switch Signal	--
17	0.5	BK	1650	Ground	-
18	0.35	YE	6817	LED Backlight Dimming Control	-

© Copyright Chevrolet. All rights reserved

Liftgate Components

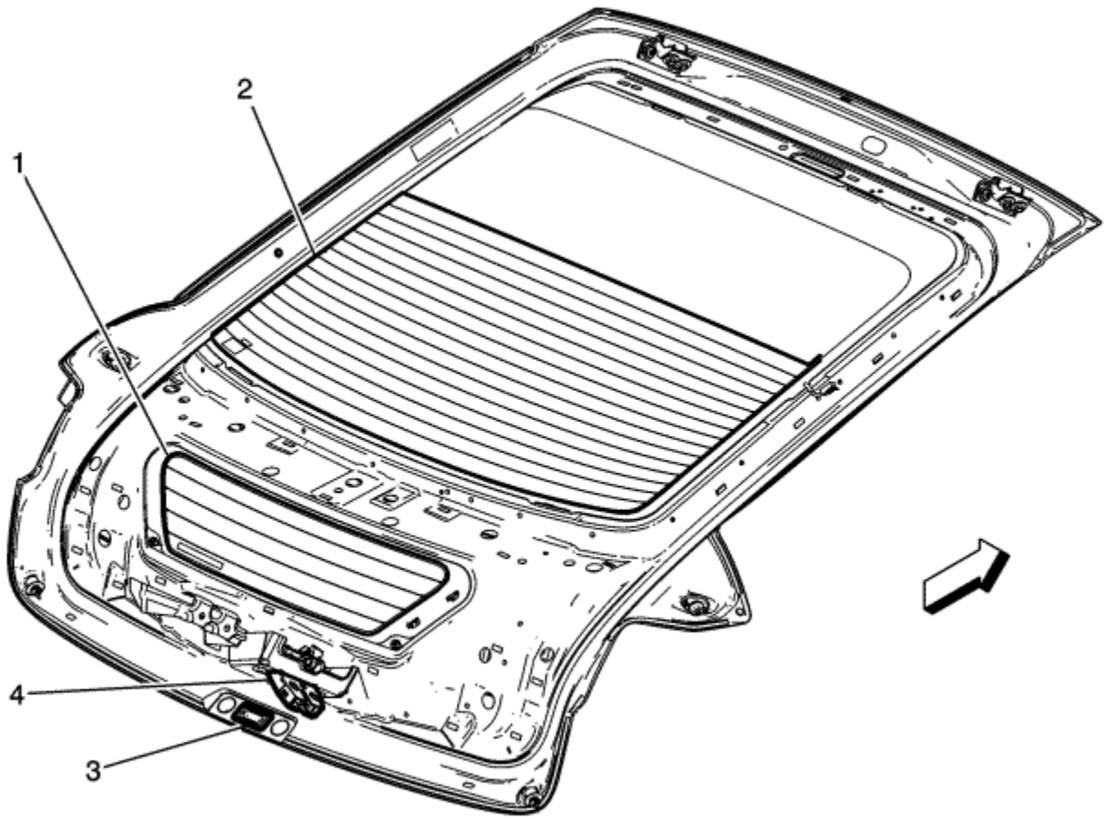

(1) E18B Rear Demisting Grid - Lower
(2) E18A Rear Demisting Grid - Upper
(3) S46 Tailgate Handle Switch
(4) A23C Tailgate Latch Assembly

© Copyright Chevrolet. All rights reserved

A23C Tailgate Latch Assembly

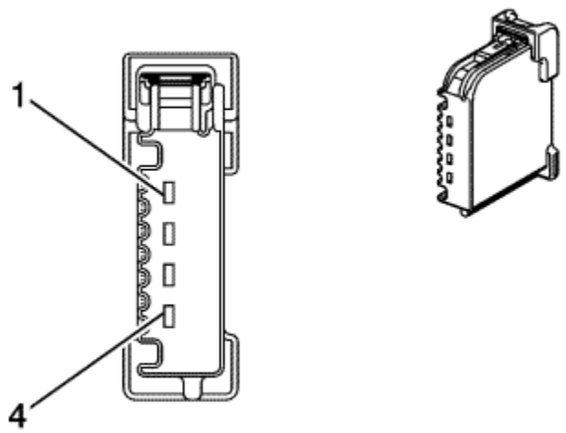

Connector Part Information

Harness Type: Liftgate
OEM Connector: 6098-5516
Service Connector: 13316141
Description: 4-Way F 1.5 Series (BK)

Terminal Part Information

Terminated Lead: 13575735
Release Tool: J-38125-553
Diagnostic Test Probe: J-35616-2A (GY)

A23C Tailgate Latch Assembly

Pin	Size	Colour	Circuit	Function	Option
1	0.5	BK	650	Ground	--
2	0.5	VT/GY	1303	Tail Gate Ajar Switch Signal (1)	--
3	0.5	L-BU/WH	6128	Rear Closure Unlatch Motor Unlatch Control	--
4	--	--	--	Not Used	--

© Copyright Chevrolet. All rights reserved

A23C Door Catch Assembly - Driver

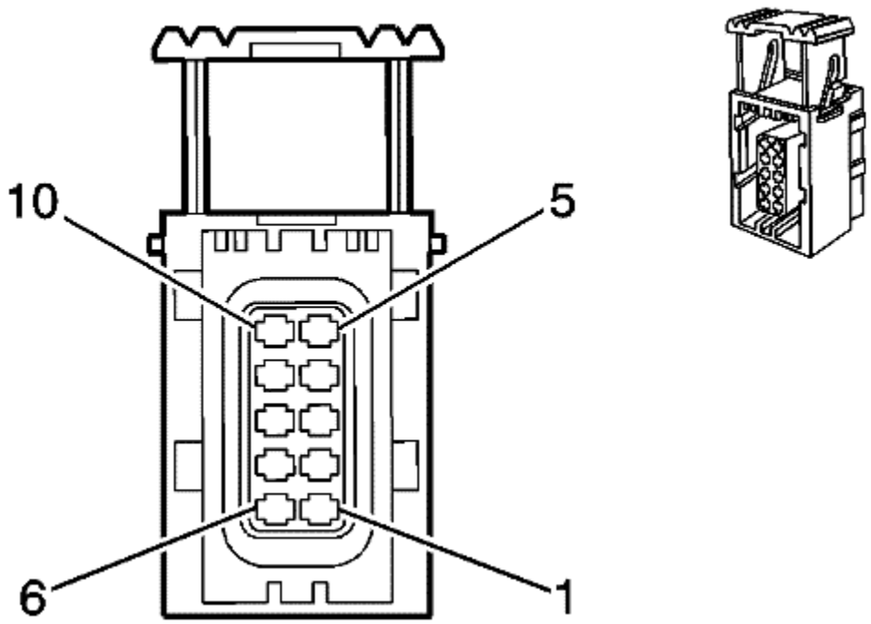

Connector Part Information

Harness Type: Driver Door
OEM Connector: 6-1355688-1
Service Connector: 88952463
Description: 10-Way F (BK)

Terminal Part Information

Pins: 2, 3
Terminated Lead: 13575366
Release Tool: J-38125-560
Diagnostic Test Probe: J-35616-14 (GN)

Pins: 4, 6, 8, 9
Terminated Lead:
Release Tool: J-38125-560
Diagnostic Test Probe: J-35616-14 (GN)

A23C Door Catch Assembly - Driver

Pin	Size	Colour	Circuit	Function	Option
1	--	--	--	Not Used	--
2	0.75	BN/YE	294	Door Lock Actuator Unlock Control	--
3	0.75	GY	5911	Door Lock Actuator Lock Control 2	-
4	0.35	BN/L-GN	3270	Driver Door Lock Motor Status Control	--
5	--	--	--	Not Used	--
6	0.35	GY	745	Left Front Door Ajar Switch Signal	-
7	--	--	--	Not Used	--
8	0.35	BK	1550	Ground	--
9	0.35	BN/L-GN	1124	Door Lock Key Switch Unlock Signal	-
10	--	--	--	Not Used	--

© Copyright Chevrolet. All rights reserved

Left Rear Door Components

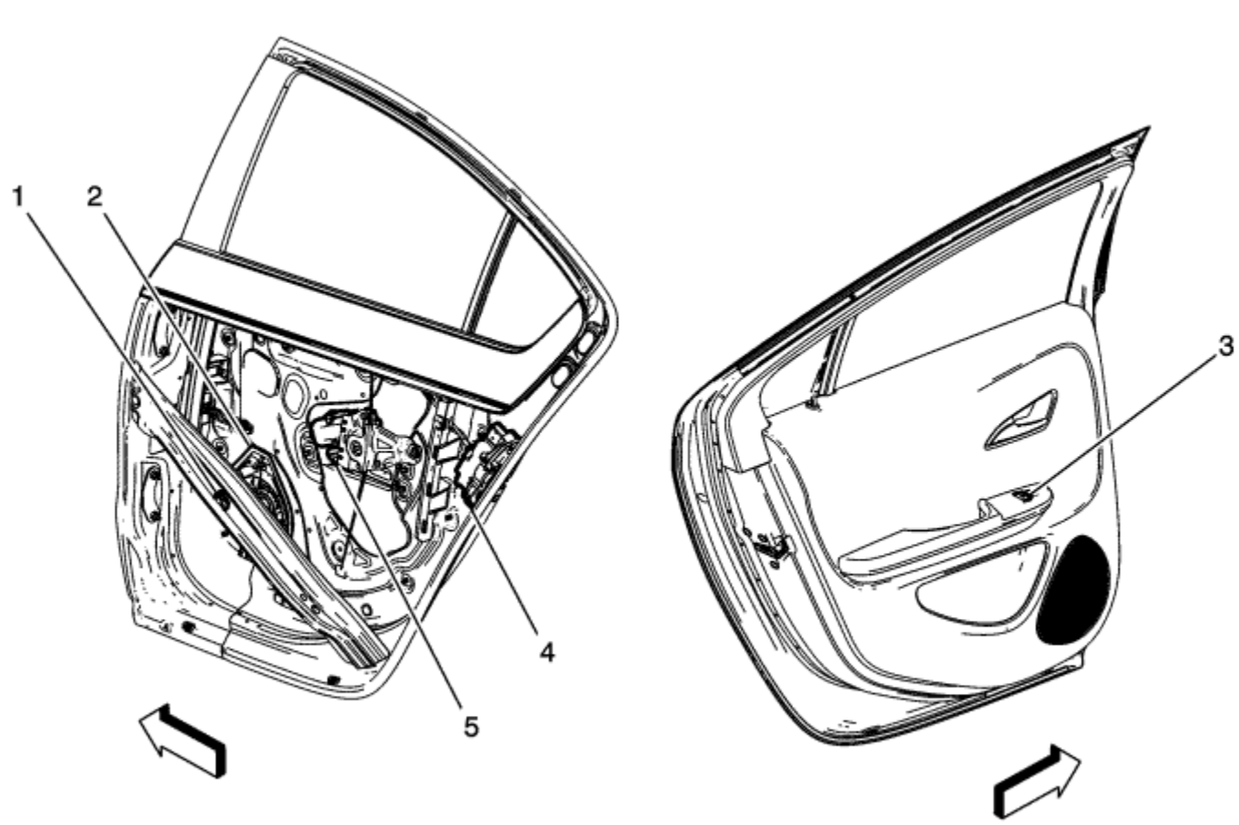

(1) B63LR Side Impact Sensor - Left Rear
(2) P19AL Speaker - Left Rear Door
(3) S79LR Window Switch - Left Rear
(4) A23LR Door Catch Assembly - Left Rear
(5) M74LR Window Motor - Left Rear

© Copyright Chevrolet. All rights reserved

A23LR Door Catch Assembly - Left Rear

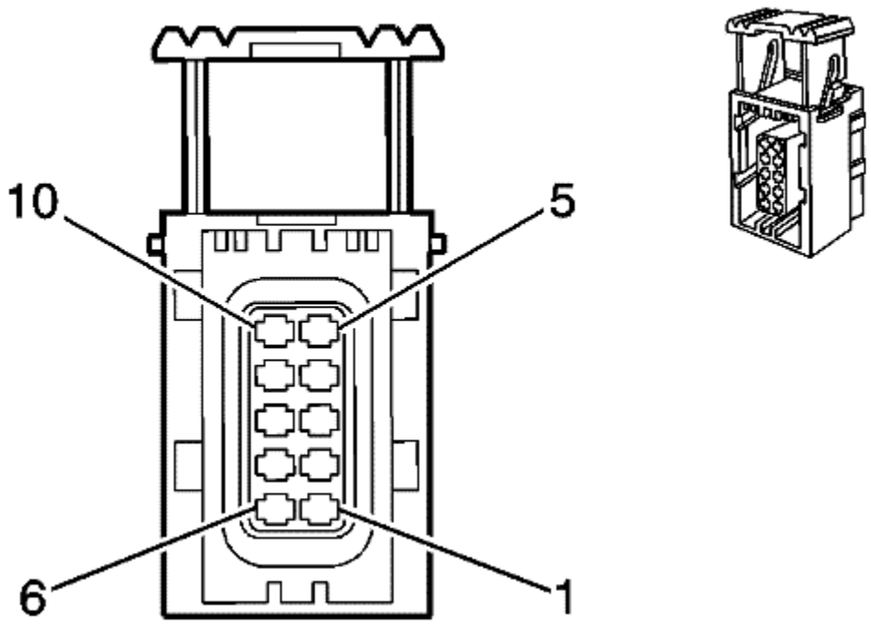

Connector Part Information

Harness Type: Left Rear Door
OEM Connector: 6-1355688-1
Service Connector: 88952463
Description: 10-Way F (BK)

Terminal Part Information

Pins: 2-4, 7
Terminated Lead: 13575366
Release Tool: J-38125-560
Diagnostic Test Probe: J-35616-14 (GN)

Pins: 6, 8, 9
Terminated Lead: 13575367
Release Tool: J-38125-560
Diagnostic Test Probe: J-35616-14 (GN)

A23LR Door Catch Assembly - Left Rear

Pin	Size	Colour	Circuit	Function	Option
1	--	--	--	Not Used	--
2	0.75	BN/YE	294	Door Lock Actuator Unlock Control	--
3	0.75	GY	295	Door Lock Actuator Lock Control	-
4	0.75	BN/YE	294	Door Lock Actuator Unlock Control	--
5	--	--	--	Not Used	--
6	0.5	GY	747	Left Rear Door Ajar Switch Signal	-
7	0.75	WH/L-BU	3266	Child Security Lock Motor Unlock Control	--
8	0.5	BK	650	Ground	--
9	0.5	BN/WH	3269	Child Security Lock Motor Status Signal Left Rear	-
10	--	--	--	Not Used	--

© Copyright Chevrolet. All rights reserved

A23P Door Catch Assembly - Passenger

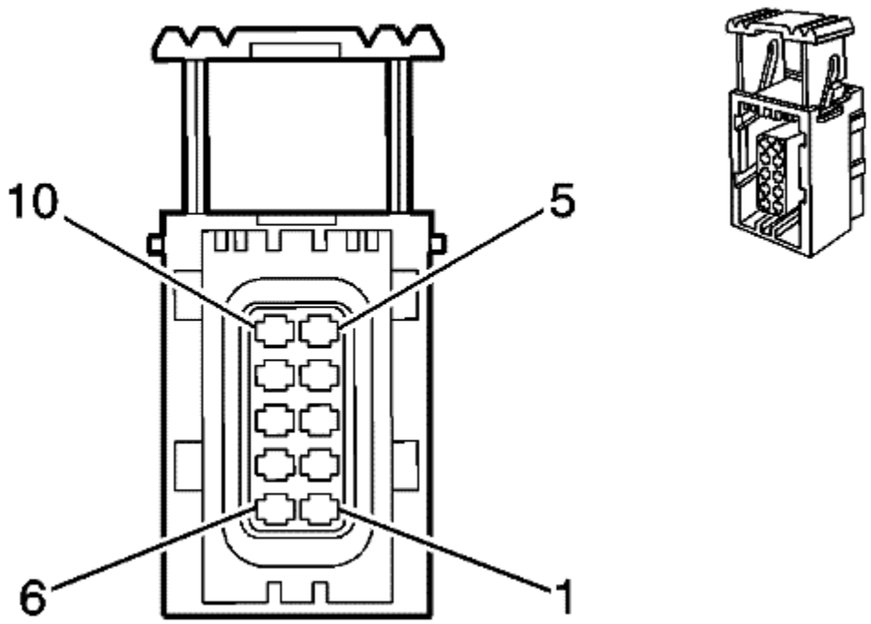

Connector Part Information

Harness Type: Passenger Door
OEM Connector: 6-1355688-1
Service Connector: 88952463
Description: 10-Way F (BK)

Terminal Part Information

Pins: 1, 3
Terminated Lead: 13575367
Release Tool: J-38125-560
Diagnostic Test Probe: J-35616-14 (GN)

Pins: 7, 8
Terminated Lead: 13575366
Release Tool: J-38125-560
Diagnostic Test Probe: J-35616-14 (GN)

A23P Door Catch Assembly - Passenger

Pin	Size	Colour	Circuit	Function	Option
1	0.5	GY	746	Right Front Door Ajar Switch Signal	-
2	--	--	--	Not Used	--
3	0.5	BK	2050	Ground	--
4-6	--	--	--	Not Used	-
7	0.75	BN/YE	294	Door Lock Actuator Unlock Control	--
8	0.75	GY	295	Door Lock Actuator Lock Control	-
9-10	--	--	--	Not Used	--

© Copyright Chevrolet. All rights reserved

Right Rear Door Components

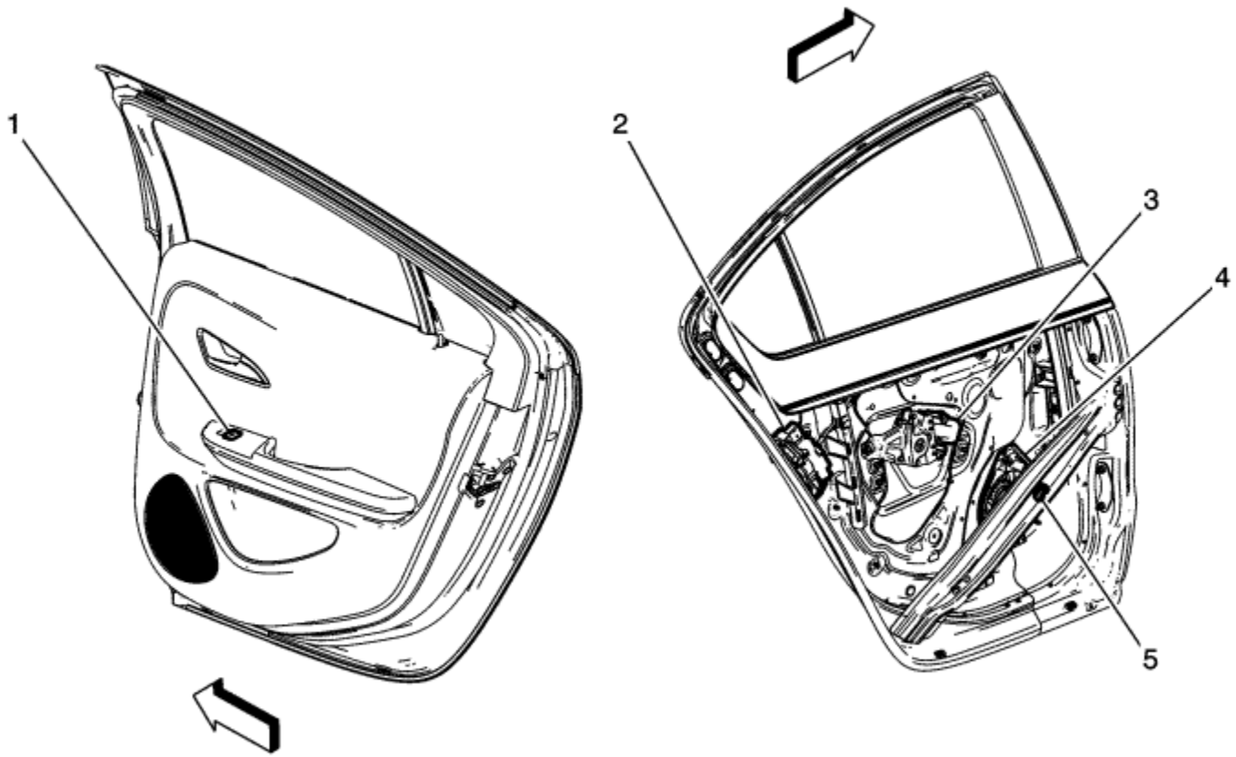

(1) S79RR Window Switch - Right Rear
(2) A23RR Door Catch Assembly - Right Rear
(3) M74RR Window Motor - Right Rear
(4) P19AM Speaker - Right Rear Door
(5) B63RR Side Impact Sensor - Right Rear

© Copyright Chevrolet. All rights reserved

A23RR Door Catch Assembly - Right Rear

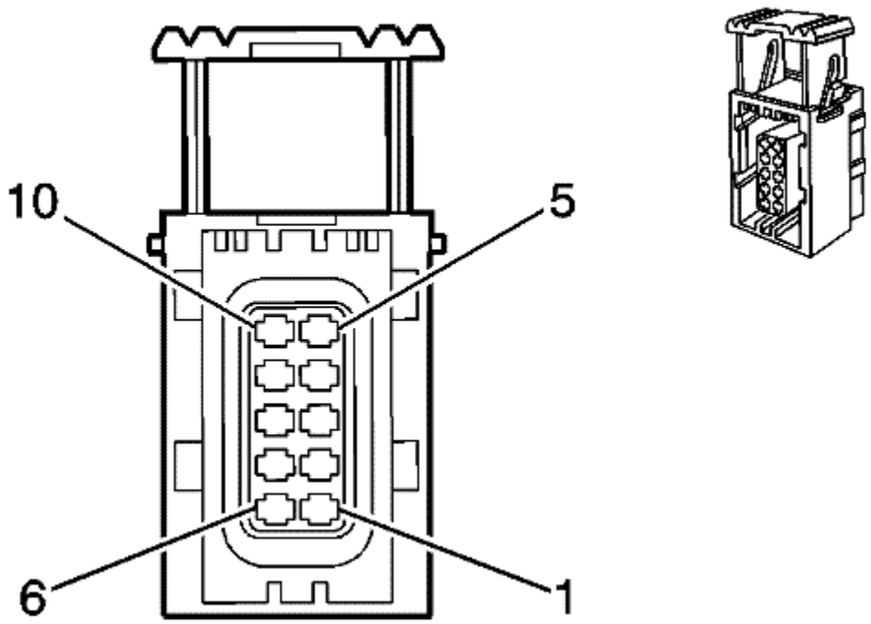

Connector Part Information

Harness Type: Right Rear Door
OEM Connector: 6-1355688-1
Service Connector: 88952463
Description: 10-Way F (BK)

Terminal Part Information

Pins: 1, 3 and 4
Terminated Lead: 13575367
Release Tool: J-38125-560
Diagnostic Test Probe: J-35616-14 (GN)

Pins: 2, 7-9
Terminated Lead: 13575366
Release Tool: J-38125-560
Diagnostic Test Probe: J-35616-14 (GN)

A23RR Door Catch Assembly - Right Rear

Pin	Size	Colour	Circuit	Function	Option
1	0.5	GY	748	Right Rear Door Ajar Switch Signal	-
2	0.75	WH/L-BU	3266	Child Security Lock Motor Unlock Control	--
3	0.5	BK	1450	Ground	-
4	0.5	GY/BK	3268	Child Security Lock Motor Status Signal Right Rear	-
5-6	--	--	--	Not Used	-
7	0.75	BN/YE	294	Door Lock Actuator Unlock Control	--
8	0.75	GY	295	Door Lock Actuator Lock Control	-
9	0.75	BN/YE	294	Door Lock Actuator Unlock Control	-
10	--	--	--	Not Used	--

© Copyright Chevrolet. All rights reserved

Engine Compartment Components - Front

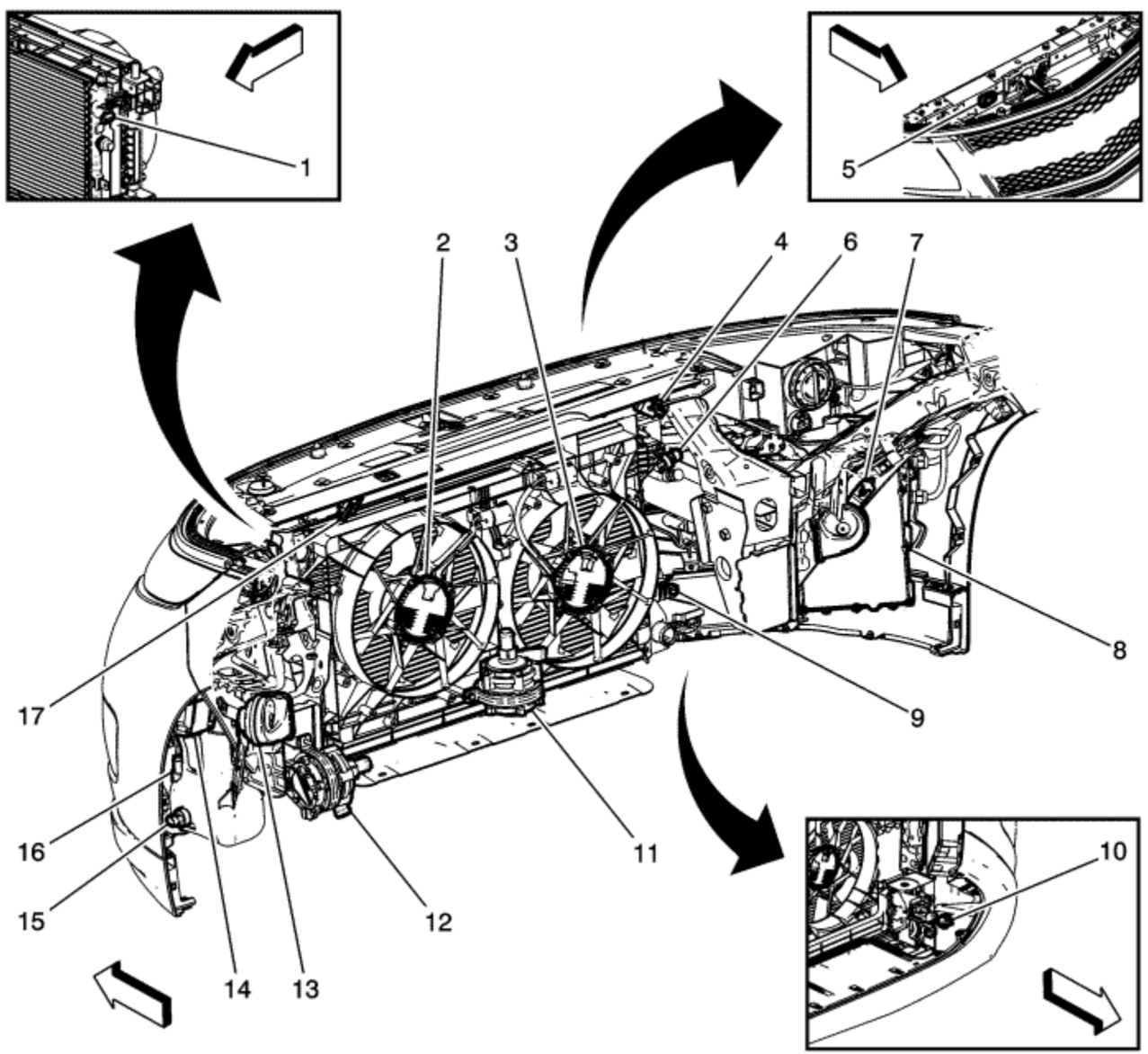

(1) B202 Hybrid Electronics Coolant Temperature Sensor
(2) G10L Cooling Fan Motor - Left
(3) G10R Cooling Fan Motor - Right
(4) B59R Front Impact Sensor - Right
(5) B55 Bonnet Ajar Switch
(6) B1 A/C Refrigerant Pressure Sensor

(7) P12R Horn - Right
(8) T18 Battery Charger
(9) B203 Engine Coolant Radiator Temperature Sensor
(10) B9 Ambient Air Temperature Sensor
(11) G37 Hybrid Battery Pack Coolant Pump
(12) G35 Hybrid Electronics Coolant Pump
(13) P12L Horn - Left
(14) K20 Engine Control Module
(15) B118 Windscreen Washer Fluid Level Sensor
(16) G24 Windscreen Washer Pump
(17) B59L Front Impact Sensor - Left

© Copyright Chevrolet. All rights reserved

B1 A/C Refrigerant Pressure Sensor

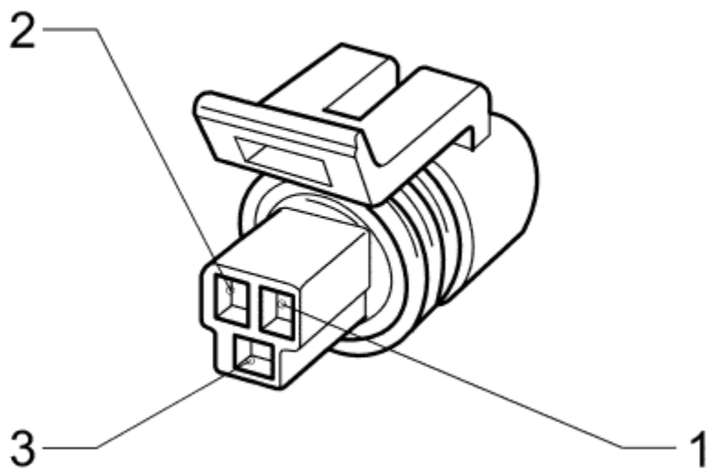

Connector Part Information

Harness Type: Cooling Fan
OEM Connector: 13602480
Service Connector: 88988301
Description: 3-Way F GT 150 Series, Sealed (BK)

Terminal Part Information

Terminated Lead: 13575433
Release Tool: J-38125-553
Diagnostic Test Probe: J-35616-2A (GY)

B1 A/C Refrigerant Pressure Sensor

Pin	Size	Colour	Circuit	Function	Option
1	0.5	BK/BN	5514	Low Reference	-

2	0.5	BN/RD	2700	5 Volt Reference	--
3	0.5	L-GN	380	A/C Refrigerant Pressure Sensor Signal	-

© Copyright Chevrolet. All rights reserved

Right Front of Engine Components

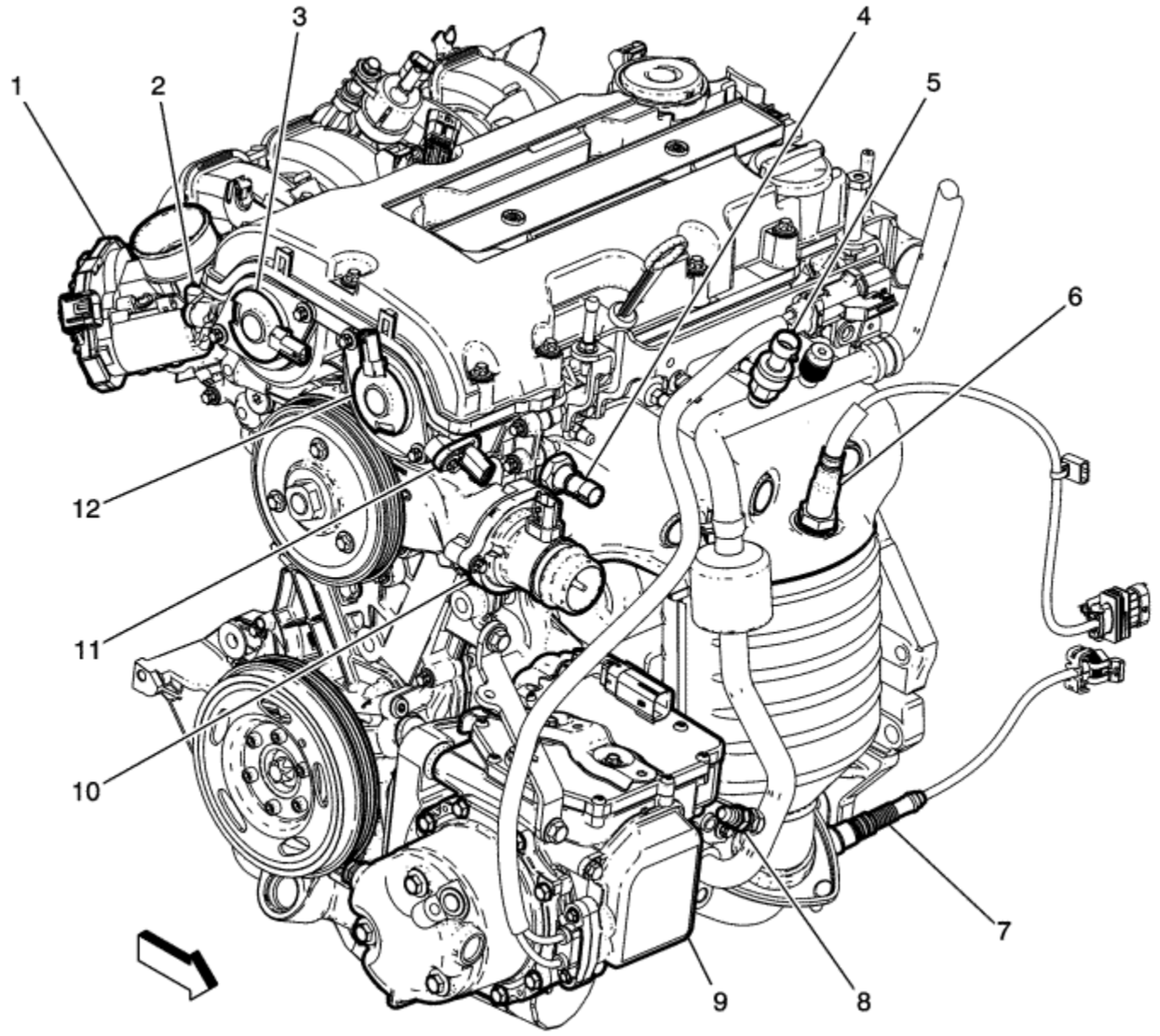

(1) Q38 Throttle Body
(2) B23F Camshaft Position Sensor - Intake
(3) Q6F Camshaft Position Actuator Solenoid Valve - Intake
(4) B37 Engine Oil Pressure Switch
(5) B1C A/C Low-Side Pressure Sensor
(6) B52A Heated Oxygen Sensor 1

(7) B52B Heated Oxygen Sensor 2
(8) B222 A/C Refrigerant Low-Side Temperature Sensor
(9) G1 A/C Compressor
(10) E41 Engine Coolant Thermostat Heater
(11) B23E Camshaft Position Sensor - Exhaust
(12) Q6E Camshaft Position Actuator Solenoid Valve - Exhaust

© Copyright Chevrolet. All rights reserved

B1C A/C Low-Side Pressure Sensor

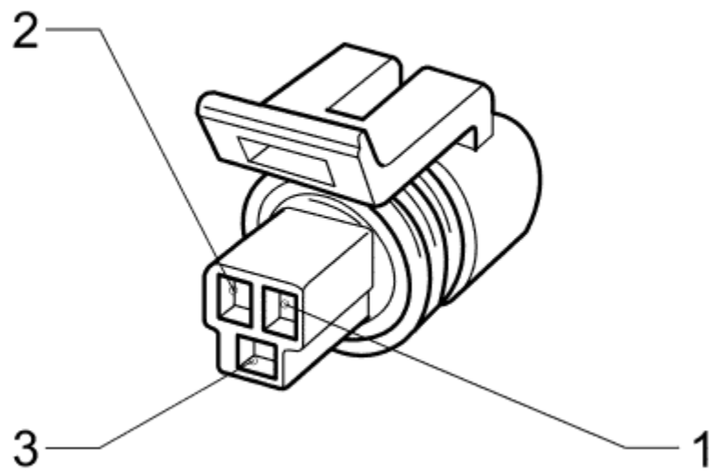

Connector Part Information

Harness Type: Engine
OEM Connector: 13602480
Service Connector: 88988301
Description: 3-Way F GT 150 Series, Sealed (BK)

Terminal Part Information

Terminated Lead: Service by Connector Assembly - 88988301
Release Tool: J-38125-553
Diagnostic Test Probe: J-35616-2A (GY)

B1C A/C Low-Side Pressure Sensor

Pin	Size	Colour	Circuit	Function	Option
1	0.5	BK/L-GN	476	Low Reference	-

2	0.5	L-BU/RD	474	5 Volt Reference	--
3	0.5	L-BU	204	A/C Low-Pressure Sensor Signal	-

© Copyright Chevrolet. All rights reserved

Underbody - Wheel Components

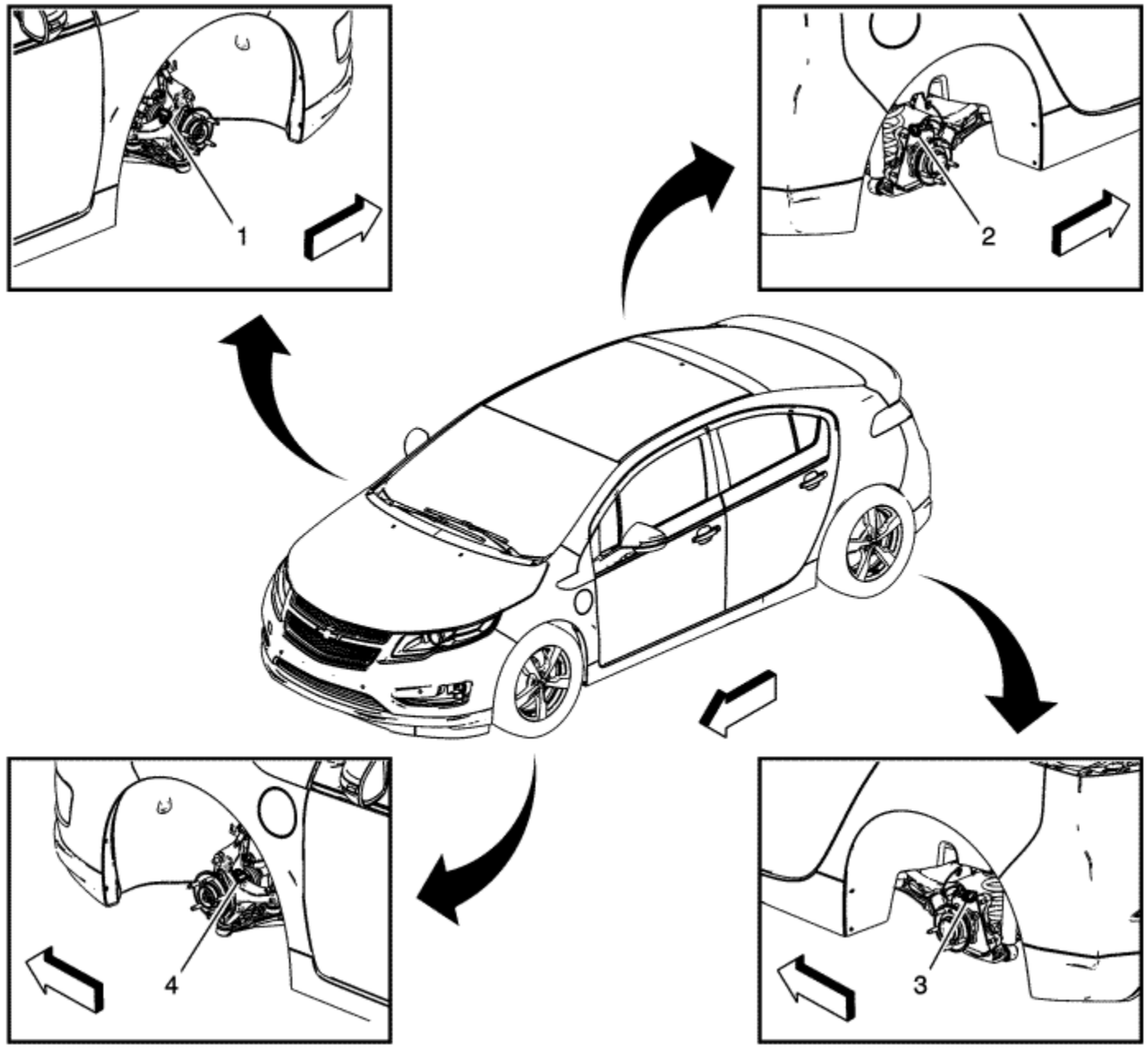

(1) B5RF Wheel Speed Sensor - Right Front
(2) B5RR Wheel Speed Sensor - Right Rear
(3) B5LR Wheel Speed Sensor - Left Rear
(4) B5LF Wheel Speed Sensor - Left Front

© Copyright Chevrolet. All rights reserved

B5LF Wheel Speed Sensor - Left Front

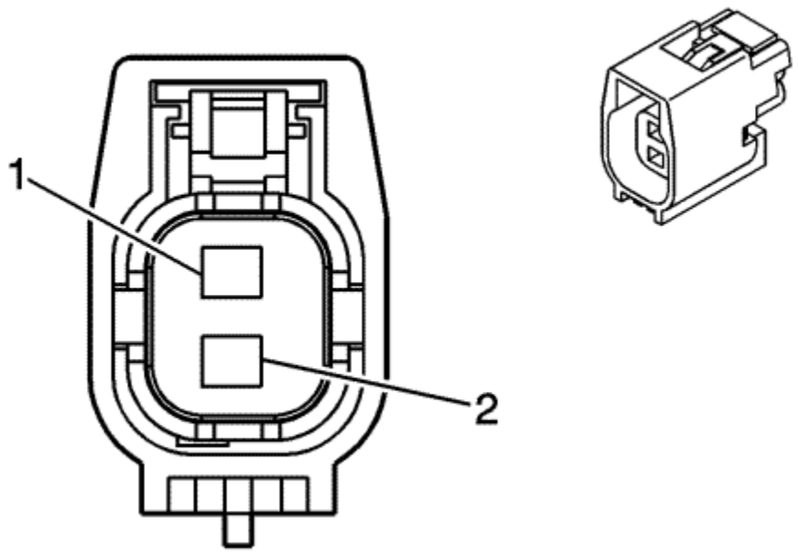

Connector Part Information

Harness Type: Forward Lamp
OEM Connector: 7287-0973-30
Service Connector: 19178097
Description: 2-Way F GT 1.5 Series Sealed (BK)

Terminal Part Information

Terminated Lead: Service by Connector Assembly - 19178097
Release Tool: J-38125-553
Diagnostic Test Probe: J-35616-2A (GY)

B5LF Wheel Speed Sensor - Left Front

Pin	Size	Colour	Circuit	Function	Option
1	0.5	GY	830	Wheel Speed Sensor Signal Left Front	-
2	0.5	BK/GY	873	Low Reference	-

© Copyright Chevrolet. All rights reserved

B5LR Wheel Speed Sensor - Left Rear

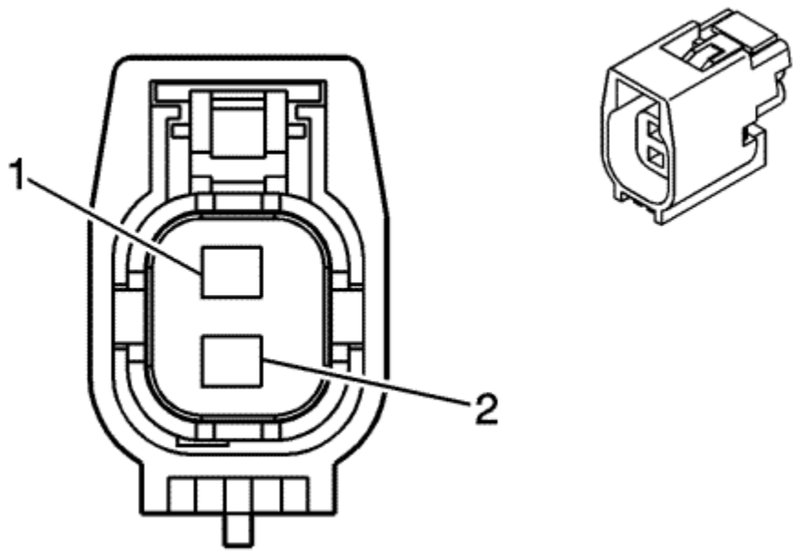

Connector Part Information

Harness Type: Body
OEM Connector: 7287-0973-30
Service Connector: 19178097
Description: 2-Way F GT 1.5 Series Sealed (BK)

Terminal Part Information

Terminated Lead: Service by Connector Assembly - 19178097
Release Tool: J-38125-553
Diagnostic Test Probe: J-35616-2A (GY)

B5LR Wheel Speed Sensor - Left Rear

Pin	Size	Colour	Circuit	Function	Option
1	0.5	L-BU	884	Wheel Speed Sensor Signal Left Rear	-
2	0.5	BK/L-BU	885	Low Reference	-

© Copyright Chevrolet. All rights reserved

B5RF Wheel Speed Sensor - Right Front

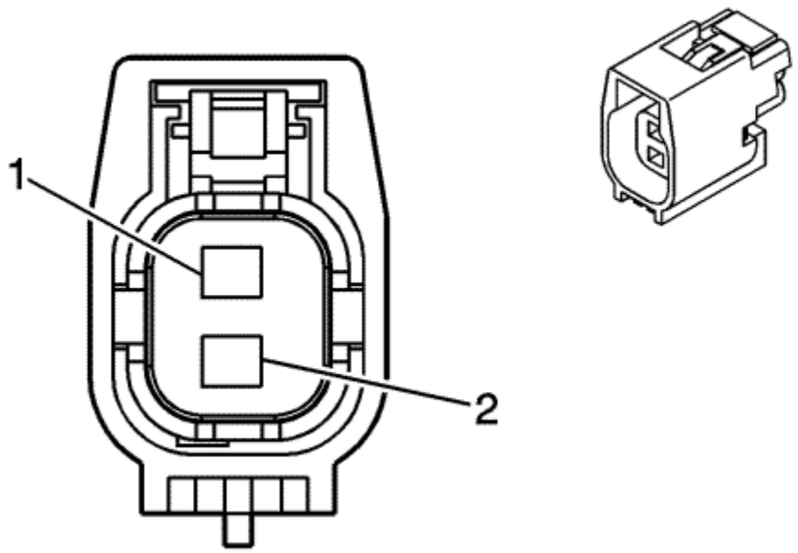

Connector Part Information

Harness Type: Forward Lamp
OEM Connector: 7287-0973-30
Service Connector: 19178097
Description: 2-Way F GT 1.5 Series Sealed (BK)

Terminal Part Information

Terminated Lead: Service by Connector Assembly - 19178097
Release Tool: J-38125-553
Diagnostic Test Probe: J-35616-2A (GY)

B5RF Wheel Speed Sensor - Right Front

Pin	Size	Colour	Circuit	Function	Option
1	0.5	YE	872	Wheel Speed Sensor Signal Right Front	-
2	0.5	BK/YE	833	Low Reference	-

© Copyright Chevrolet. All rights reserved

B5RR Wheel Speed Sensor - Right Rear

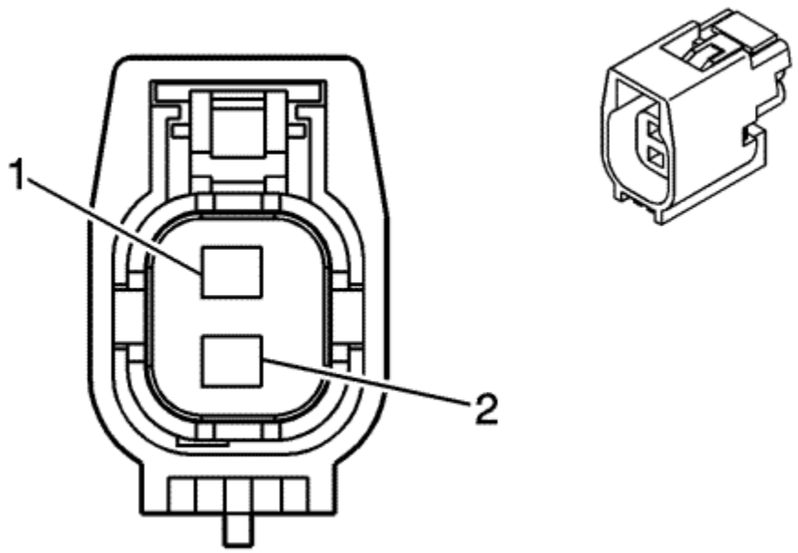

Connector Part Information

Harness Type: Body
OEM Connector: 7287-0973-30
Service Connector: 19178097
Description: 2-Way F GT 1.5 Series Sealed (BK)

Terminal Part Information

Terminated Lead: Service by Connector Assembly - 19178097
Release Tool: J-38125-553
Diagnostic Test Probe: J-35616-2A (GY)

B5RR Wheel Speed Sensor - Right Rear

Pin	Size	Colour	Circuit	Function	Option
1	0.5	VT	882	Wheel Speed Sensor Signal Right Rear	-
2	0.5	BK/VT	883	Low Reference	-

© Copyright Chevrolet. All rights reserved

Instrument Panel - HVAC Components

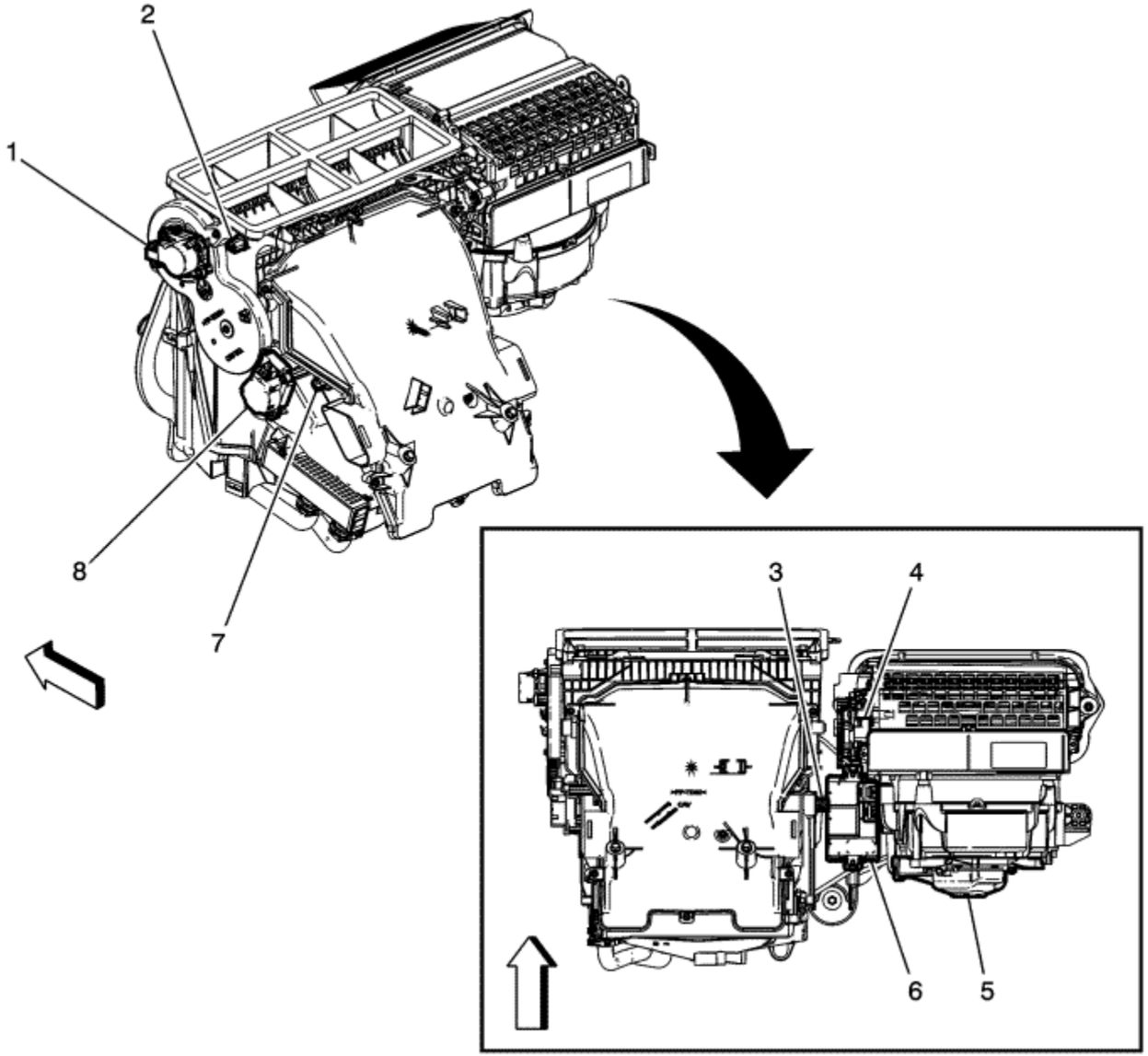

(1) M37 Mode Door Actuator
(2) B7F Air Temperature Sensor - Duct Upper
(3) B39 A/C Evaporator Temperature Sensor
(4) M46 Air Recirculation Door Motor
(5) M8 Blower Motor
(6) K8 Blower Motor Control Module

(7) B7B Air Temperature Sensor - Duct Lower
(8) M6 Air Temperature Door Actuator

© Copyright Chevrolet. All rights reserved

B7B Air Temperature Sensor - Duct Lower

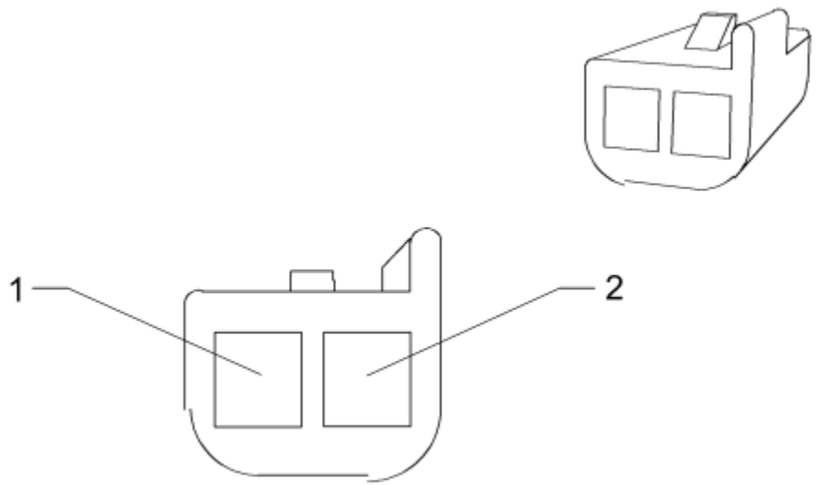

Connector Part Information

Harness: HVAC
OEM: 12047662
Service: 12085535
Description: 2-Way F Metri-Pack 150 Series (BK)

Terminal Part Information

Terminated Lead: Service by Connector Assembly - 12085535
Release Tool: J-38125-12A
Diagnostic Test Probe: J-35616-14 (GN)

B7B Air Temperature Sensor - Duct Lower

Pin	Size	Colour	Circuit	Function	Option
A	0.35	D-BU	518	Lower Left Air Temperature Sensor Signal	-
B	0.35	BK	407	Sensor Low Reference	-

© Copyright Chevrolet. All rights reserved

B7F Air Temperature Sensor - Duct Upper

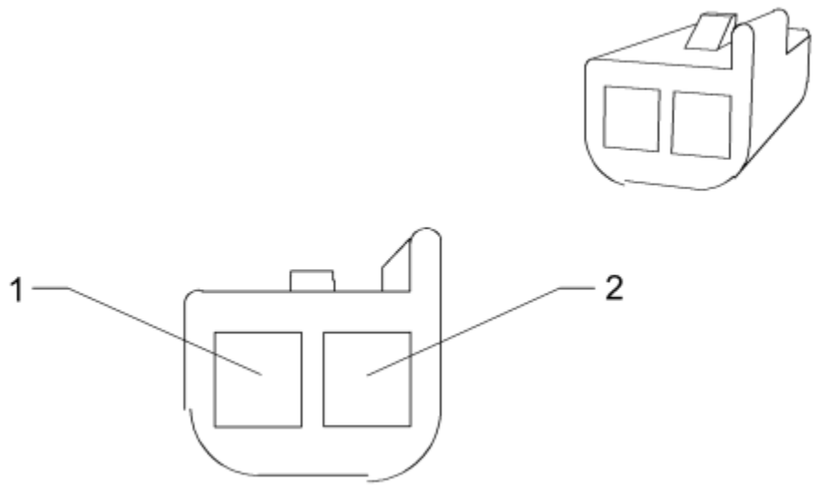

Connector Part Information

Harness: HVAC
OEM: 12047662
Service: 12085535
Description: 2-Way F Metri-Pack 150 Series (BK)

Terminal Part Information

Terminated Lead: Service by Connector Assembly - 12085535
Release Tool: J-38125-12A
Diagnostic Test Probe: J-35616-14 (GN)

B7F Air Temperature Sensor - Duct Upper

Pin	Size	Colour	Circuit	Function	Option
A	0.35	GY/D-GN	516	Upper Left Air Temperature Sensor Signal	--
B	0.35	BK	407	Sensor Low Reference	-

© Copyright Chevrolet. All rights reserved

B9 Ambient Air Temperature Sensor

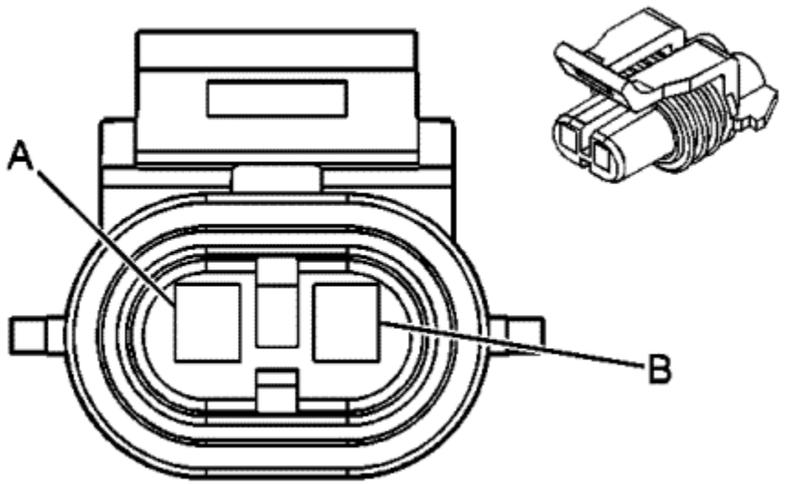

Connector Part Information

Harness Type: Forward Lamp
OEM Connector: 13543521
Service Connector: 12101856
Description: 2-Way F Metri-Pack 150 Series, Sealed (BK)

Terminal Part Information

Terminated Lead: Service by Connector Assembly - 12101856
Release Tool: J-38125-12A
Diagnostic Test Probe: J-35616-14 (GN)

B9 Ambient Air Temperature Sensor

Pin	Size	Colour	Circuit	Function	Option
A	0.5	L-BU/GY	636	Outside Ambient Air Temperature Sensor Signal	-
B	0.5	BK/L-BU	61	Outside Ambient Temperature Sensor Low Reference	-

© Copyright Chevrolet. All rights reserved

B10B Ambient Light/Sunload Sensor

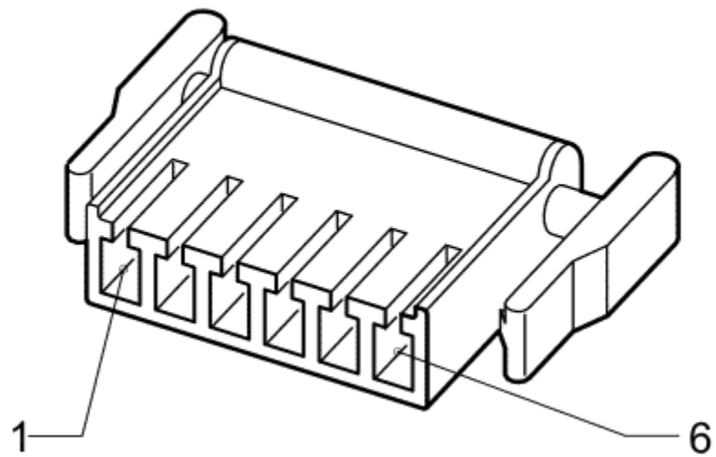

Connector Part Information

Harness Type: Instrument Panel Top Pad
OEM Connector: 13726957
Service Connector: 13576539
Description: 6-Way F 0.64 Micro Quadlok Series (BK)

Terminal Part Information

Terminated Lead: 13575782
Release Tool: J-38125-12A
Diagnostic Test Probe: J-35616-64B (L-BU)

B10B Ambient Light/Sunload Sensor

Pin	Size	Colour	Circuit	Function	Option
1-2	--	--	--	Not Used	--

3	0.5	L-BU/WH	734	Inside Air Temperature Sensor Signal	-
4	0.5	YE/VT	1783	Twilight Sentinel Delay Signal	--
5	0.5	WH/L-BU	278	Ambient Light Sensor Signal	--
6	0.5	BK/BN	6102	Low Reference	-

© Copyright Chevrolet. All rights reserved

B14A Transmission Output Shaft Speed Sensor

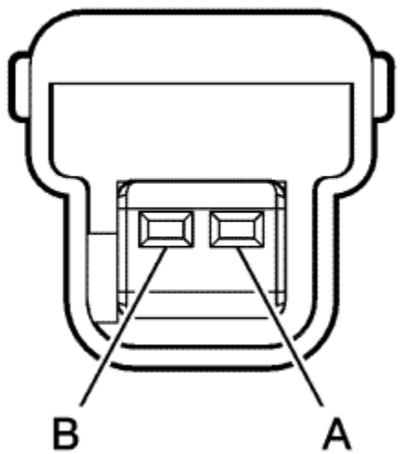

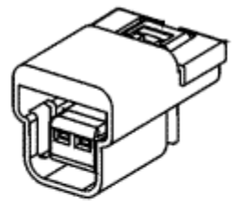

Connector Part Information

Harness Type: Transmission
OEM Connector: 15332128
Service Connector: Service by Harness - See Part Catalog
Description: 2-Way F GT 150 Series (BK)

Terminal Part Information

Terminated Lead: 13575735
Release Tool: J-38125-553
Diagnostic Test Probe: J-35616-2A (GY)

B14A Transmission Output Shaft Speed Sensor

Pin	Size	Colour	Circuit	Function	Option
A	0.5	RD	908	Output Speed High-Signal Output	-
B	0.5	VT	909	Output Speed Low Signal	-

© Copyright Chevrolet. All rights reserved

B15 Transmission Internal Mode Switch X1

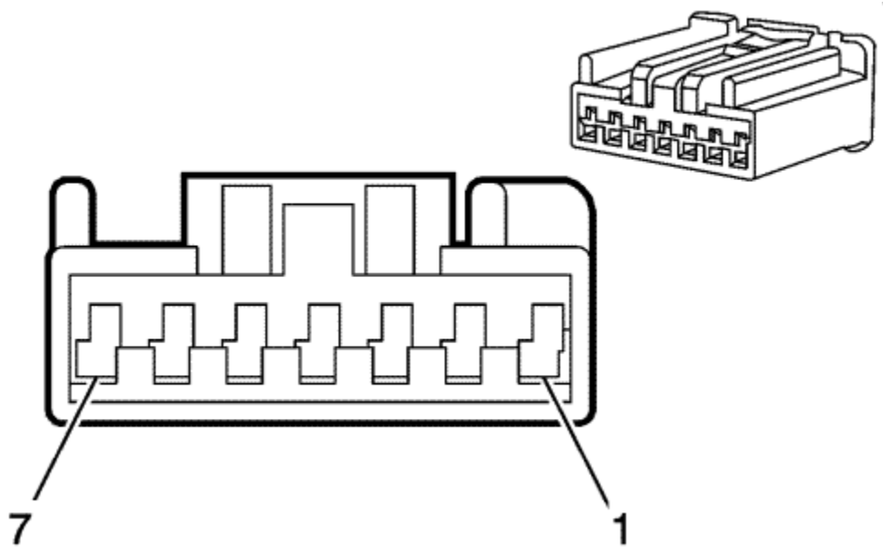

Connector Part Information

Harness Type: Transmission
OEM Connector: AIT-2PB-1BH
Service Connector: Service by Harness - See Part Catalog
Description: 7-Way F AIT II Series (NA)

Terminal Part Information

Terminated Lead: 13575845
Release Tool: J-38125-215A
Diagnostic Test Probe: J-35616-64B (L-BU)

B15 Transmission Internal Mode Switch X1

Pin	Size	Colour	Circuit	Function	Option
1	0.5	RD	901	12 Volt Reference	-
2	0.5	D-GN	902	Transmission IMS Mode Switch S bit Signal	--
3	0.5	YE	903	Transmission IMS Mode Switch R1 bit Signal	-

4	0.5	VT	904	Transmission IMS Mode Switch R2 bit Signal	--
5	0.5	L-BU	905	Transmission IMS Mode Switch D1 bit Signal	--
6	0.5	GY	906	Transmission IMS Mode Switch D2 bit Signal	-
7	0.5	BK	907	Signal Ground	-

© Copyright Chevrolet. All rights reserved

B15 Transmission Internal Mode Switch X2

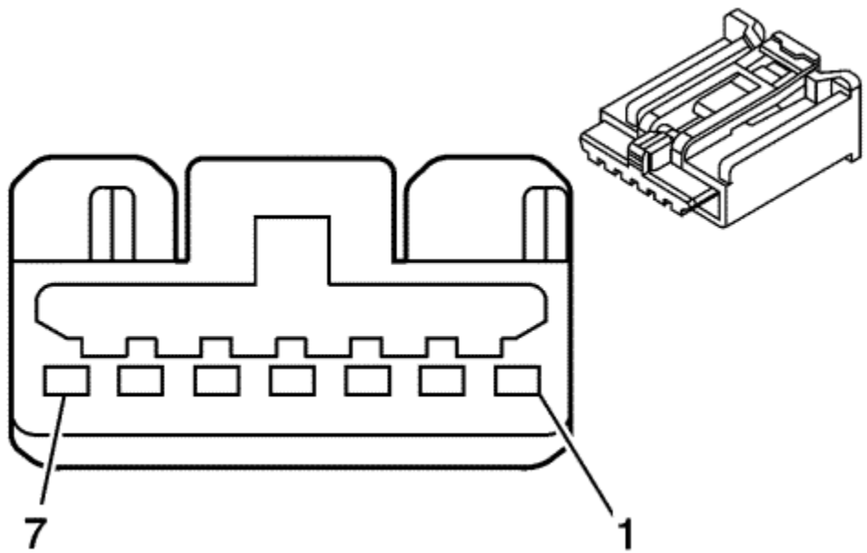

Connector Part Information

Harness Type: Transmission
OEM Connector: AIT2PB-07-1FS
Service Connector: Service by Harness - See Part Catalog
Description: 7-Way F AIT II Series (NA)

Terminal Part Information

Terminated Lead: 13575845
Release Tool: J-38125-215A
Diagnostic Test Probe: J-35616-64B (L-BU)

B15 Transmission Internal Mode Switch X2

Pin	Size	Colour	Circuit	Function	Option
1	--	--	--	Not Used	--
2	0.5	RD	910	12V Reference	--
3	0.5	YE	911	Transmission IMS Mode Switch P bit Signal	-

4	0.5	VT	912	Transmission IMS Mode Switch C bit Signal	--
5	0.5	L-BU	913	Transmission IMS Mode Switch B bit Signal	--
6	0.5	GY	914	Transmission IMS Mode Switch A bit Signal	-
7	0.5	BK	915	Low Reference	-

© Copyright Chevrolet. All rights reserved

Luggage Compartment Components

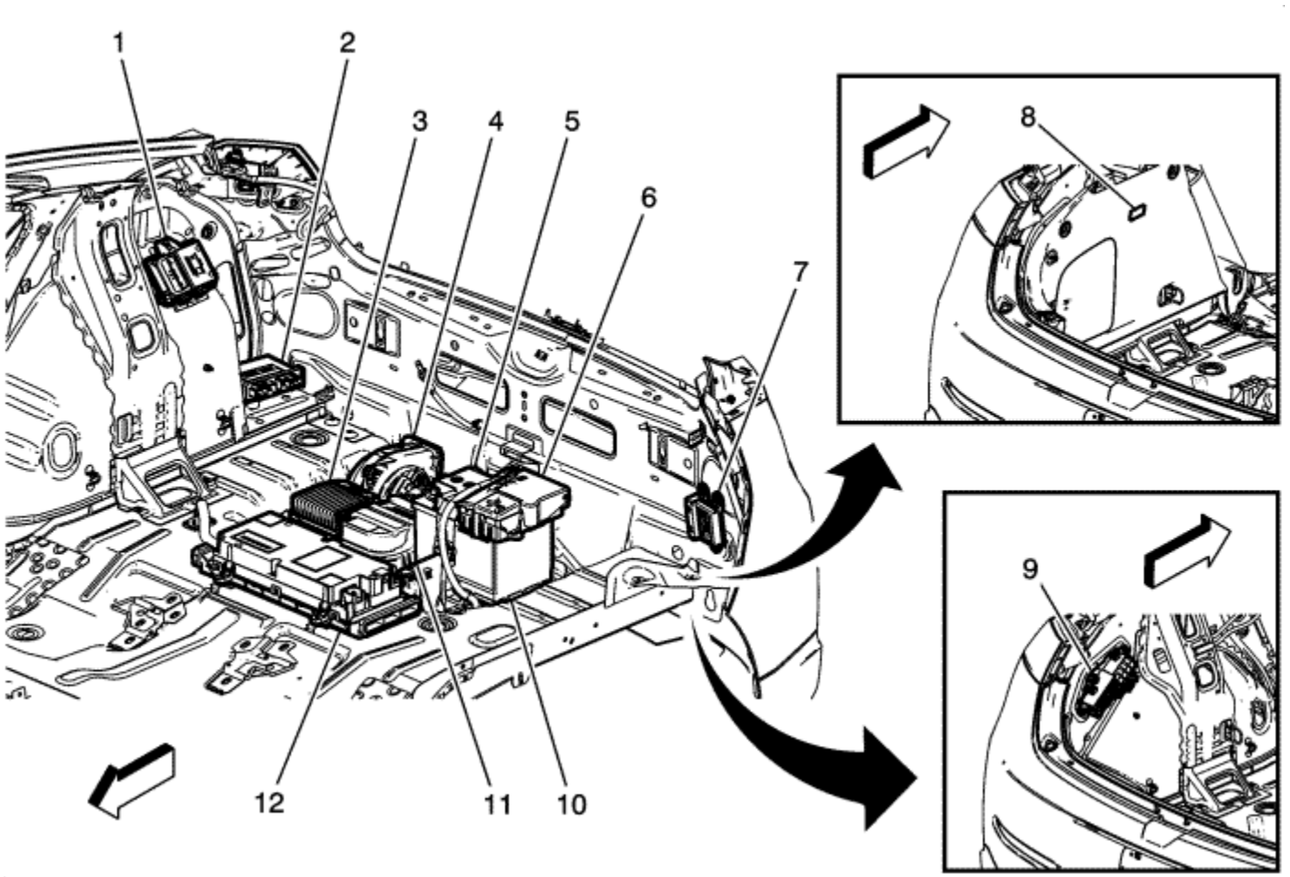

(1) K27 Fuel Pump Control Module
(2) K84 Keyless Entry Control Module
(3) T3 Audio Amplifier
(4) G38 14V Power Module Cooling Fan
(5) B18 Battery Current Sensor
(6) X50D Fuse Block - Battery

(7) K41 Parking Assist Control Module
(8) E33 Cargo Lamp
(9) X53A Fuse Block - Rear Body
(10) C1 Battery
(11) P19AC Speaker - Subwoofer
(12) K1 14 V Power Module

© Copyright Chevrolet. All rights reserved

B18 Battery Current Sensor

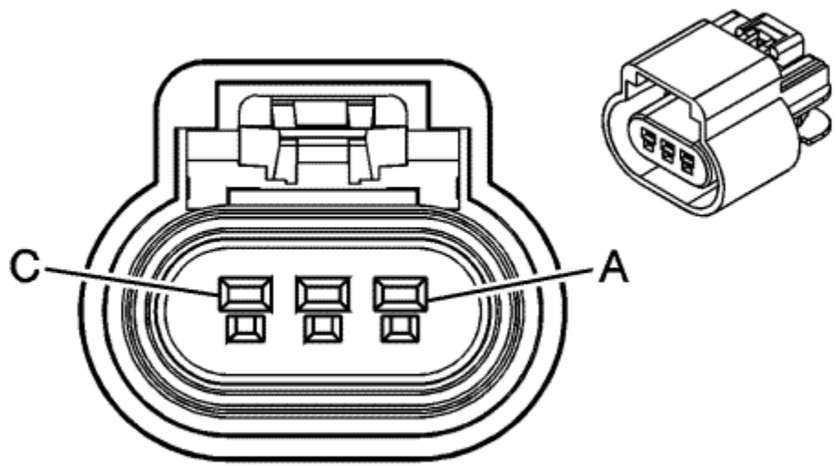

Connector Part Information

Harness Type: Body
OEM Connector: 13519047
Service Connector: 15306388
Description: 3-Way F GT 150 Series, Sealed (BK)

Terminal Part Information

Terminated Lead: Service by Connector Assembly - Pending
Release Tool: J-38125-553
Diagnostic Test Probe: J-35616-2A (GY)

B18 Battery Current Sensor

Pin	Size	Colour	Circuit	Function	Option
A	0.5	L-BU/VT	5076	Current Sensor Supply Voltage	-
B	0.5	BK/VT	5077	Low Reference	-
C	0.5	WH/YE	5075	Current Sensor Signal	-

© Copyright Chevrolet. All rights reserved

Engine Compartment Components - Left

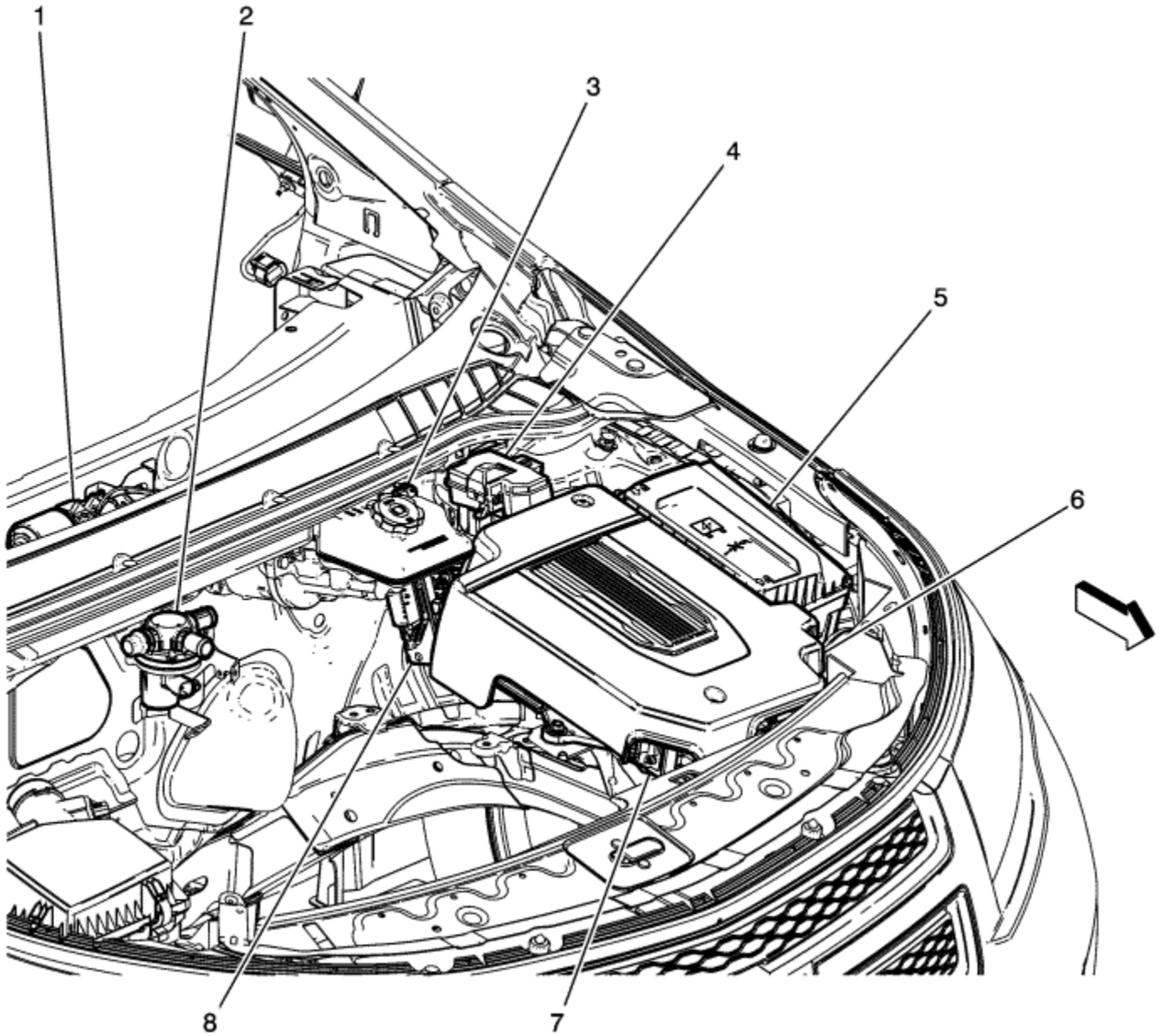

(1) M75 Windscreen Wiper Motor
(2) Q66 Passenger Compartment Heater Coolant Control Valve
(3) B20 Brake Fluid Level Switch
(4) X50B Fuse Block - Underbonnet Auxiliary
(5) X50A Fuse Block - Underbonnet
(6) F103 Power Inverter Module Assembly Cable Cover

(7) T6 Power Inverter Module
(8) K17 Electronic Brake Control Module

© Copyright Chevrolet. All rights reserved

B20 Brake Fluid Level Switch

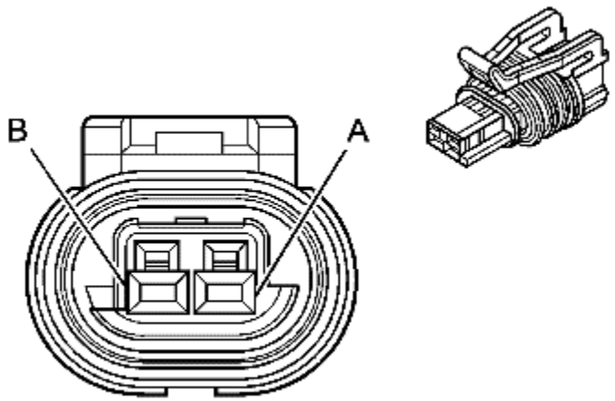

Connector Part Information

Harness Type: Body
OEM Connector: 15449028
Service Connector: 88987993
Description: 2-Way F GT 150 Series, Sealed (BK)

Terminal Part Information

Terminated Lead: Service by Connector Assembly - 88987993
Release Tool: J-38125-553
Diagnostic Test Probe: J-35616-2A (GY)

B20 Brake Fluid Level Switch

Pin	Size	Colour	Circuit	Function	Option
A	0.5	L-GN/GY	333	Brake Fluid Level Sensor Signal	-
B	0.5	BK	2650	Ground	-

© Copyright Chevrolet. All rights reserved

B22 Brake Pedal Position Sensor

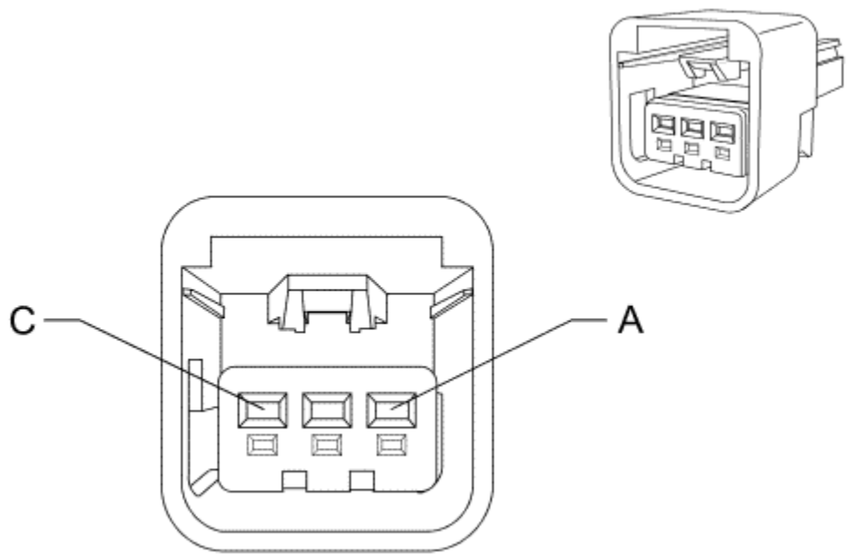

Connector Part Information

Harness Type: Instrument Panel
OEM Connector: 15332132
Service Connector: 88953364
Description: 3-Way F GT 150 Series (BK)

Terminal Part Information

Terminated Lead: Service by Connector Assembly - 88953364
Release Tool: J-38125-553
Diagnostic Test Probe: J-35616-2A (GY)

B22 Brake Pedal Position Sensor

Pin	Size	Colour	Circuit	Function	Option
A	0.35	WH	5359	Brake Apply Sensor Supply Voltage	-

B	0.35	L-BU/YE	5361	Brake Apply Sensor Signal	-
C	0.35	BK/BN	5360	Low Reference	-

© Copyright Chevrolet. All rights reserved

B23E Camshaft Position Sensor - Exhaust

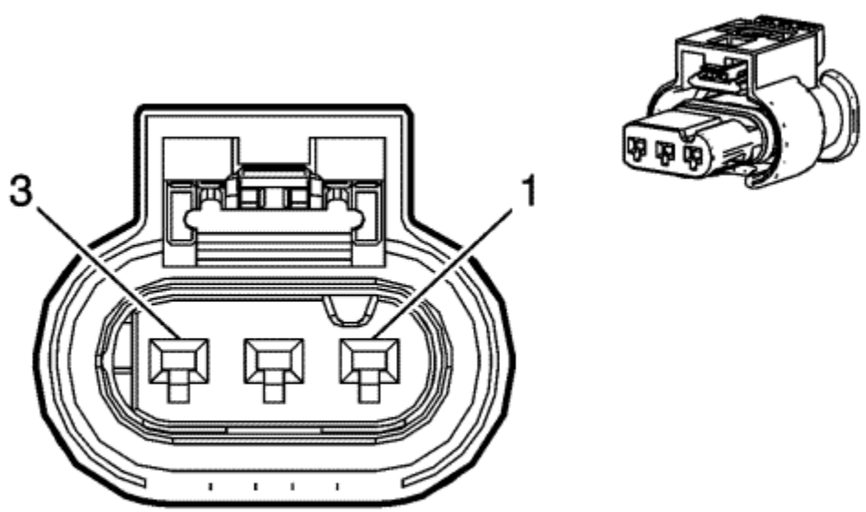

Connector Part Information

Harness Type: Engine
OEM Connector: 13276381
Service Connector: Pending
Description: 3-Way F 1.2 MLK Series (BK)

Terminal Part Information

Terminated Lead: Service by Connector Assembly - Pending
Release Tool: Pending
Diagnostic Test Probe: Pending

B23E Camshaft Position Sensor - Exhaust

Pin	Size	Colour	Circuit	Function	Option
1	0.5	GY/YE	5297	Camshaft Position Exhaust Sensor Supply Voltage (1)	-
2	0.5	BK/GY	5296	Low Reference	--
3	0.5	VT/BK	5273	Camshaft Position Exhaust Sensor (1)	-

© Copyright Chevrolet. All rights reserved

B23F Camshaft Position Sensor - Intake

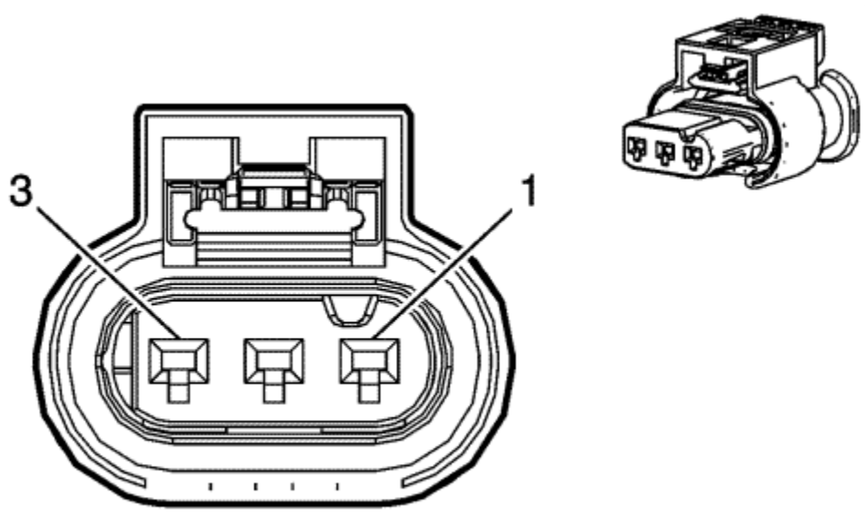

Connector Part Information

Harness Type: Engine
OEM Connector: 13276381
Service Connector: Pending
Description: 3-Way F 1.2 MLK Series (BK)

Terminal Part Information

Terminated Lead: Service by Connector Assembly - Pending
Release Tool: Pending
Diagnostic Test Probe: Pending

B23F Camshaft Position Sensor - Intake

Pin	Size	Colour	Circuit	Function	Option
1	0.5	GY/L-BU	5300	Camshaft Position Intake Sensor Supply Voltage (1)	-
2	0.5	BK/L-GN	5301	Low Reference	--
3	0.5	YE/VT	5275	Camshaft Position Intake Sensor (1)	-

© Copyright Chevrolet. All rights reserved

B24 Cellular Phone Microphone

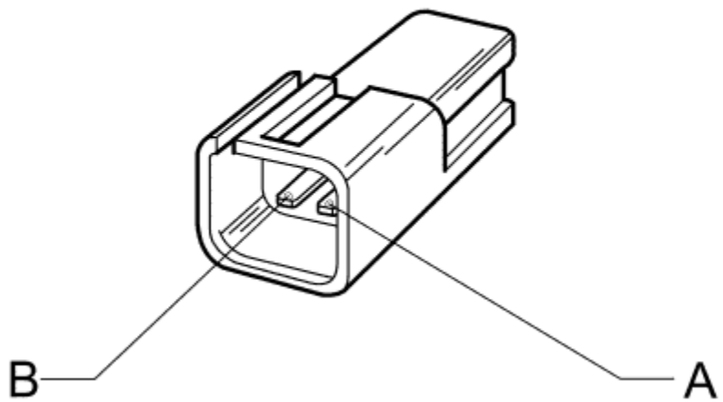

Connector Part Information

Harness Type: Headliner
OEM Connector: 12089868
Service Connector: 12085481
Description: 2-Way M Metri-Pack 150 Series (BK)

Terminal Part Information

Terminated Lead: Service by Connector Assembly - 12085481
Release Tool: J-38125-12A
Diagnostic Test Probe: J-35616-3 (GY)

B24 Cellular Phone Microphone

Pin	Size	Colour	Circuit	Function	Option
A	0.5	BK/BN	654	Low Reference	-

B	0.5	L-BU	655	Mobile Telephone Microphone Signal	-

© Copyright Chevrolet. All rights reserved

Left Rear of Engine Components

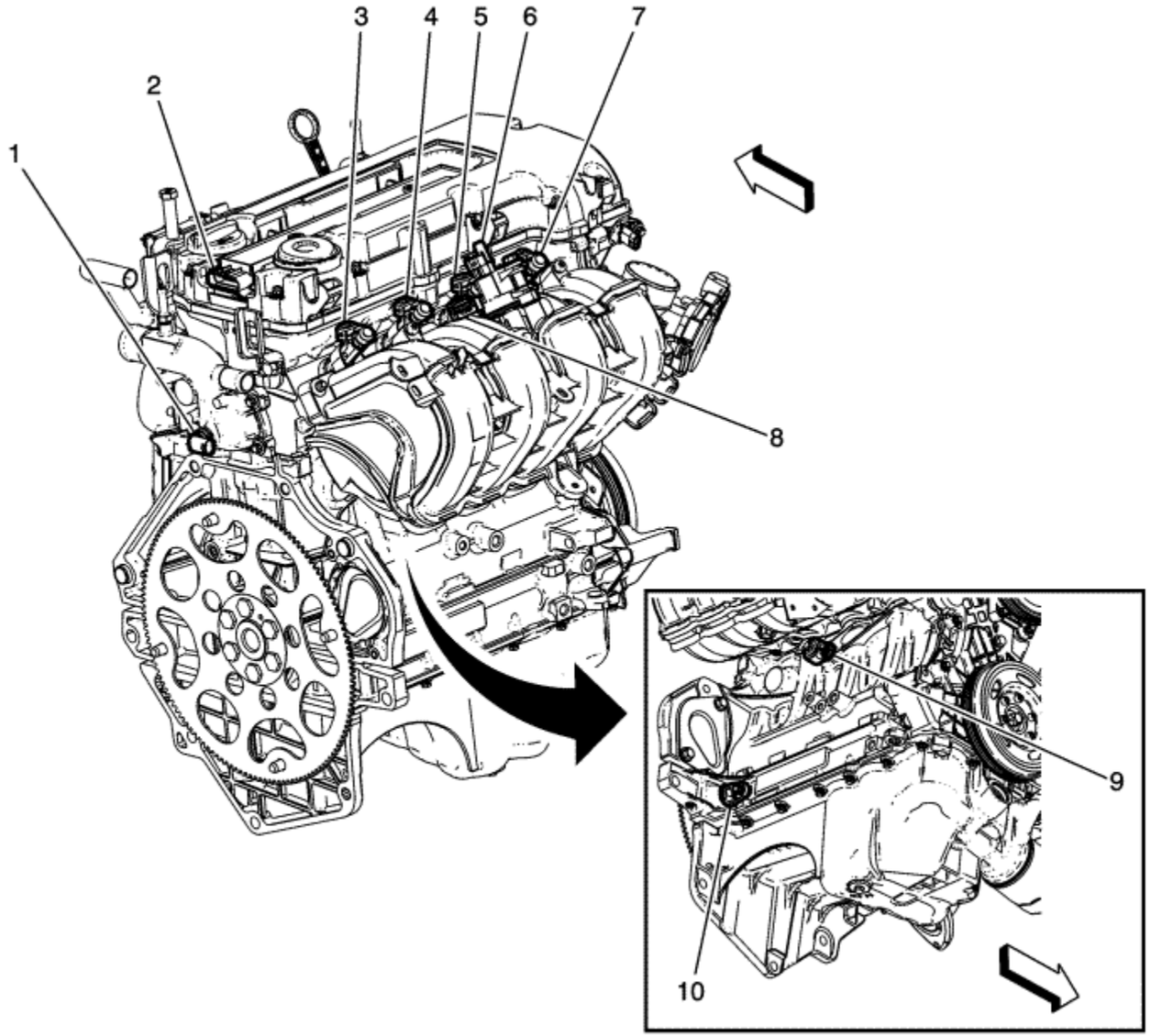

(1) B34 Engine Coolant Temperature Sensor
(2) K35 Ignition Coil Module
(3) Q17D Fuel Injector 4
(4) Q17C Fuel Injector 3
(5) Q12 Evaporative Emission Purge Solenoid Valve
(6) Q17B Fuel Injector 2

(7) Q17A Fuel Injector 1
(8) B74 Manifold Absolute Pressure Sensor
(9) B68 Knock Sensor
(10) B26 Crankshaft Position Sensor

© Copyright Chevrolet. All rights reserved

B26 Crankshaft Position Sensor

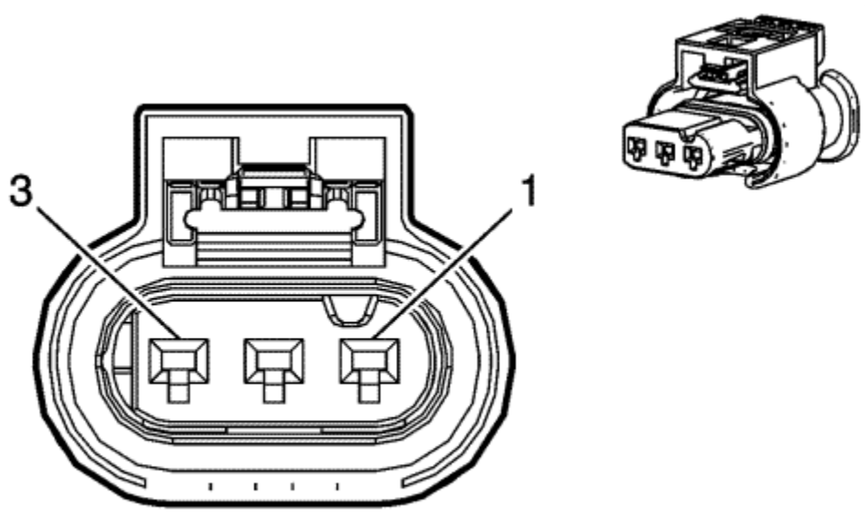

Connector Part Information

Harness Type: Engine
OEM Connector: 805-121-521
Service Connector: 13574937
Description: 3-Way F MLK 1.2 Series, Sealed (BK)

Terminal Part Information

Terminated Lead: Service by Connector Assembly - 13574937
Release Tool: Pending
Diagnostic Test Probe: Pending

B26 Crankshaft Position Sensor

Pin	Size	Colour	Circuit	Function	Option
1	0.5	VT/L-BU	6270	Crankshaft 60X Sensor Voltage	-
2	0.5	BK/VT	6272	Low Reference	--
3	0.5	L-GN	6271	Crankshaft 60X Sensor Signal	-

© Copyright Chevrolet. All rights reserved

B30 Hybrid Battery Pack Current Sensor

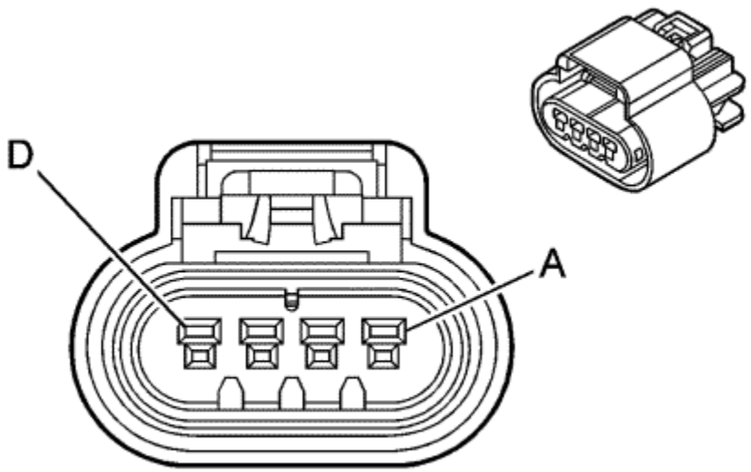

Connector Part Information

Harness Type: Hybrid Battery
OEM Connector: 15487756
Service Connector: 19180287
Description: 4-Way F GT 150 Series, Sealed (BK)

Terminal Part Information

Terminated Lead: 13575413
Release Tool: J-38125-553
Diagnostic Test Probe: J-35616-2A (GY)

B30 Hybrid Battery Pack Current Sensor

Pin	Size	Colour	Circuit	Function	Option
A	0.5	L-BU/YE	2962	High-Voltage Battery Current Sensor Course Signal	-
B	0.5	VT/RD	2965	High-Voltage Battery Current Sensor Voltage Reference	-
C	0.5	BK/GY	2963	Low Reference	--
D	0.5	L-GN/BN	2961	High-Voltage Battery Current Sensor Fine Signal	-

© Copyright Chevrolet. All rights reserved

Underbody - Hybrid/EV Battery Pack Section 3

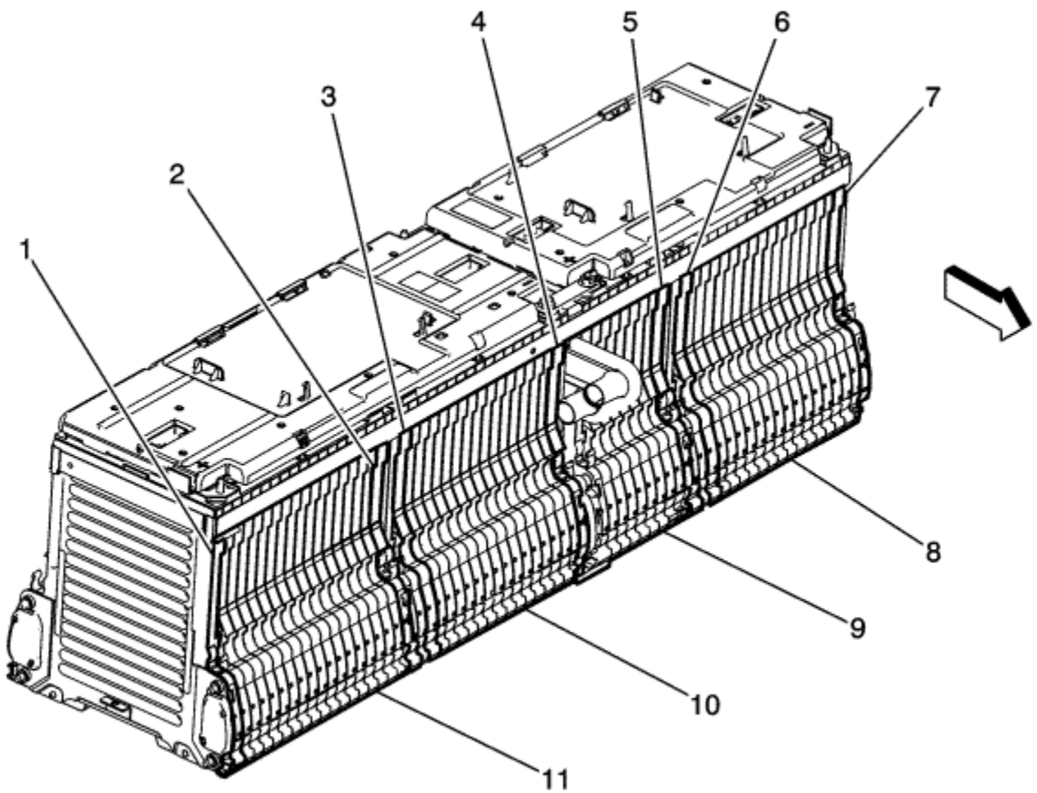

(1) B32G Hybrid/EV Battery Pack Temperature Sensor 7
(2) B32F Hybrid/EV Battery Pack Temperature Sensor 6
(3) B32E Hybrid/EV Battery Pack Temperature Sensor 5
(4) B32D Hybrid/EV Battery Pack Temperature Sensor 4
(5) B32C Hybrid/EV Battery Pack Temperature Sensor 3
(6) B32B Hybrid/EV Battery Pack Temperature Sensor 2

(7) B32A Hybrid/EV Battery Pack Temperature Sensor 1
(8) C5A Hybrid/EV Battery Module 1
(9) C5B Hybrid/EV Battery Module 2
(10) C5C Hybrid/EV Battery Module 3
(11) C5D Hybrid/EV Battery Module 4

© Copyright Chevrolet. All rights reserved

Underbody - Hybrid/EV Battery Pack Section 2

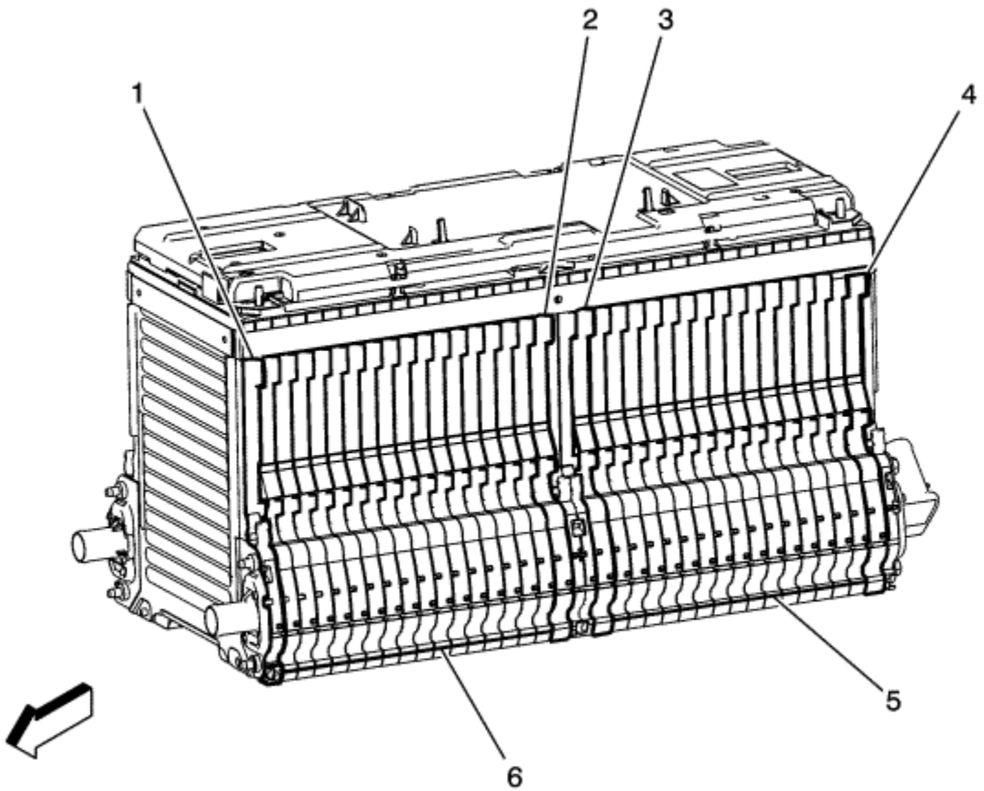

(1) B32L Hybrid/EV Battery Pack Temperature Sensor 11
(2) B32K Hybrid/EV Battery Pack Temperature Sensor 10
(3) B32J Hybrid/EV Battery Pack Temperature Sensor 9
(4) B32H Hybrid/EV Battery Pack Temperature Sensor 8
(5) C5E Hybrid/EV Battery Module 5
(6) C5F Hybrid/EV Battery Module 6

© Copyright Chevrolet. All rights reserved

Underbody - Hybrid/EV Battery Pack Section 1

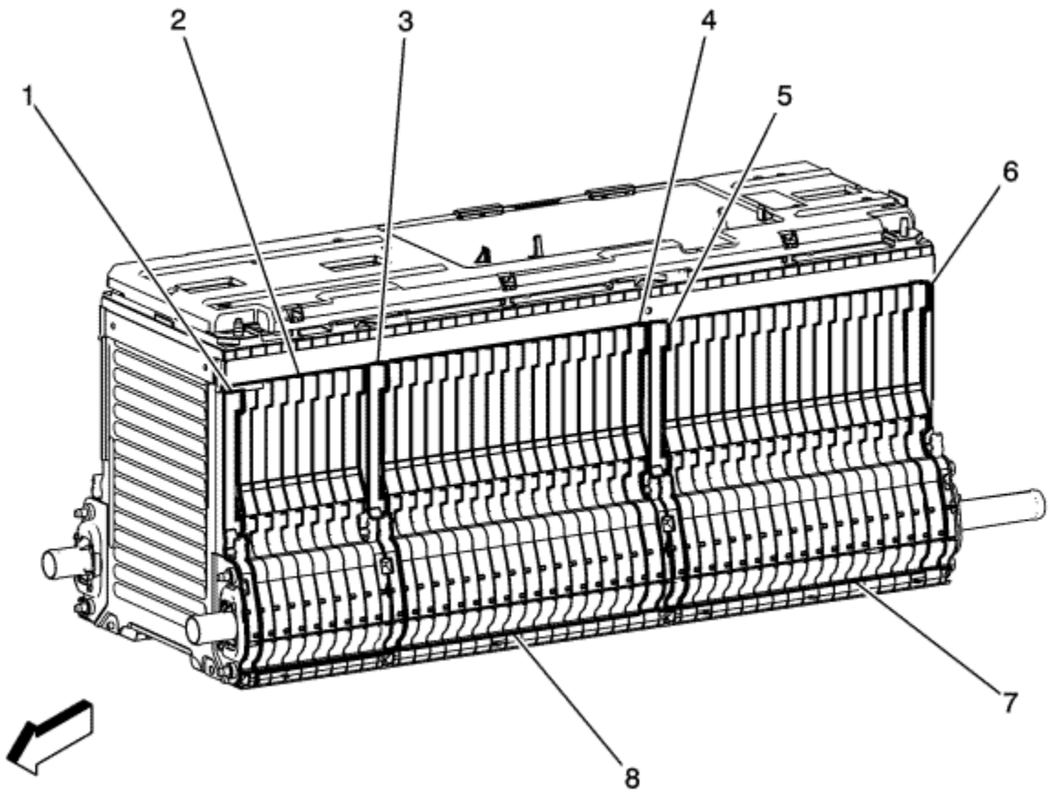

(1) B32R Hybrid/EV Battery Pack Temperature Sensor 16
(2) C5J Hybrid/EV Battery Module 9
(3) B32Q Hybrid/EV Battery Pack Temperature Sensor 15
(4) B32P Hybrid/EV Battery Pack Temperature Sensor 14
(5) B32N Hybrid/EV Battery Pack Temperature Sensor 13
(6) B32M Hybrid/EV Battery Pack Temperature Sensor 12

(7) C5G Hybrid/EV Battery Module 7
(8) C5H Hybrid/EV Battery Module 8

© Copyright Chevrolet. All rights reserved

B34 Engine Coolant Temperature Sensor

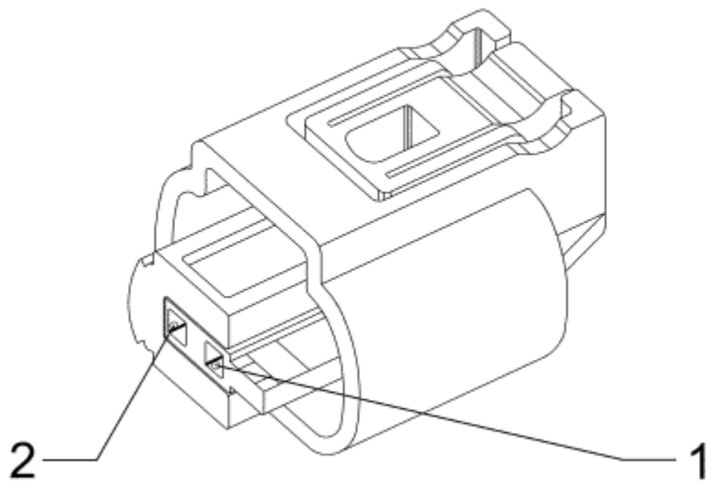

Connector Part Information

Harness Type: Engine
OEM Connector: 1-967644-1
Service Connector: 13576533
Description: 2-Way F 0.64 MQS Series, Sealed (BK)

Terminal Part Information

Terminated Lead: Service by Connector Assembly - 13576533
Release Tool: J-38125-12A
Diagnostic Test Probe: J-35616-64B (L-BU)

B34 Engine Coolant Temperature Sensor

Pin	Size	Colour	Circuit	Function	Option
1	0.5	L-BU	410	Engine Coolant Temperature Sensor Signal	-

2	0.5	BK/BN	2761	Low Reference	-

© Copyright Chevrolet. All rights reserved

B37 Engine Oil Pressure Switch

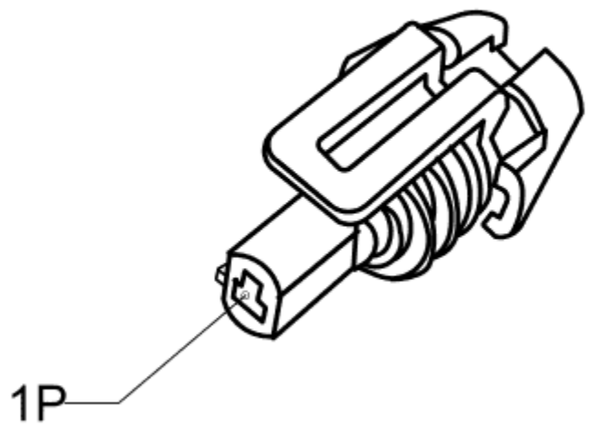

Connector Part Information

Harness Type: Engine
OEM Connector: 15345499
Service Connector: 13355771
Description: 1-Way F Metri-Pack 150 Series, Sealed (BK)

Terminal Part Information

Terminated Lead: Service by Connector Assembly - Pending
Release Tool: J-38125-12A
Diagnostic Test Probe: J-35616-14 (GN)

B37 Engine Oil Pressure Switch

Pin	Size	Colour	Circuit	Function	Option
1	0.75	YE/L-BU	231	Oil Pressure Switch Signal	-

© Copyright Chevrolet. All rights reserved

B39 A/C Evaporator Temperature Sensor

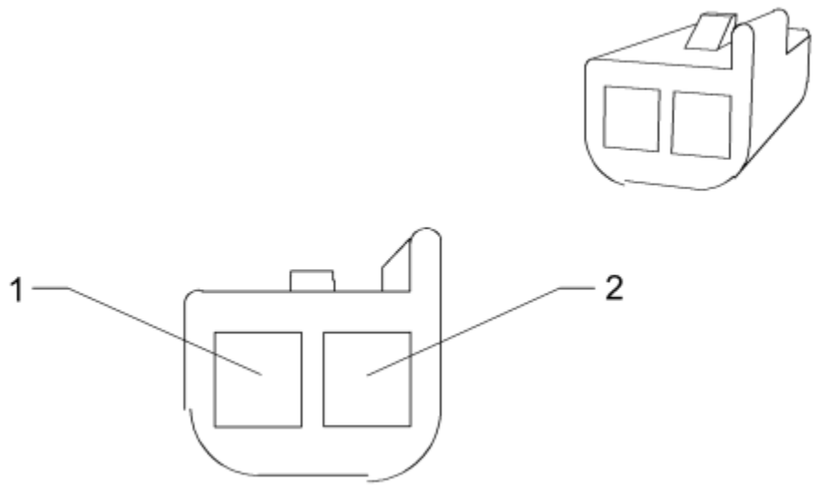

Connector Part Information

Harness: HVAC
OEM: 12047662
Service: 12085535
Description: 2-Way F Metri-Pack 150 Series (BK)

Terminal Part Information

Terminated Lead: Service by Connector Assembly - 12085535
Release Tool: J-38125-12A
Diagnostic Test Probe: J-35616-14 (GN)

B39 A/C Evaporator Temperature Sensor

Pin	Size	Colour	Circuit	Function	Option
A	0.35	BK/GY	6137	EVAP Core Temperature Sensor Signal	-
B	0.35	BK	407	Sensor Low Reference	-

© Copyright Chevrolet. All rights reserved

B47 Fuel Pressure Sensor

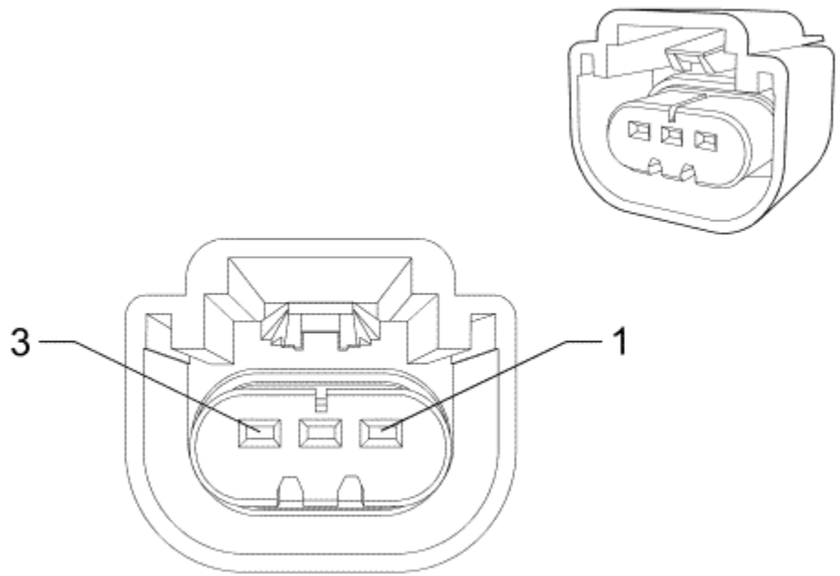

Connector Part Information

Harness Type: Fuel Pressure
OEM Connector: 13511131
Service Connector: 19168035
Description: 3-Way F GT 150 Series, Sealed (BK)

Terminal Part Information

Terminated Lead: 13575413
Release Tool: J-38125-553
Diagnostic Test Probe: J-35616-2A (GY)

B47 Fuel Pressure Sensor

Pin	Size	Colour	Circuit	Function	Option
1	0.5	L-BU/WH	7446	Fuel Line Pressure Sensor Signal	-

2	0.5	BK/YE	7447	Low Reference	--
3	0.5	BN/RD	7445	5 Volt Reference	-

© Copyright Chevrolet. All rights reserved

B52A Heated Oxygen Sensor 1

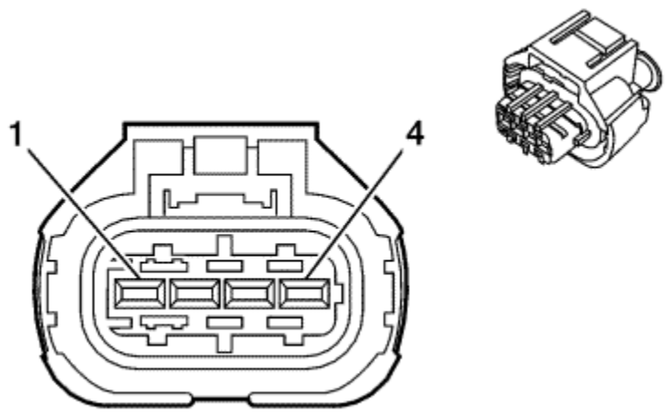

Connector Part Information

Harness Type: Engine
OEM Connector: 1928403913
Service Connector: 13577523
Description: 4-Way F 2.8 Timer Series, Sealed (BK)

Terminal Part Information

Terminated Lead: Service by Connector Assembly - Pending
Release Tool: J-38125-36
Diagnostic Test Probe: J-35616-35 (VT)

B52A Heated Oxygen Sensor 1

Pin	Size	Colour	Circuit	Function	Option
1	0.5	VT/L-BU	5293	Powertrain Main Relay Fused Supply (4)	-
2	0.5	GY/WH	3113	Heated Oxygen Sensor Heater Low Control Bank 1 Sensor (1)	-
3	0.5	VT/GY	3110	Heated Oxygen Sensor High Signal Bank 1 Sensor (1)	-
4	0.5	WH/BK	3111	Heated Oxygen Sensor Low Signal Bank 1 Sensor (1)	-

© Copyright Chevrolet. All rights reserved

B52B Heated Oxygen Sensor 2

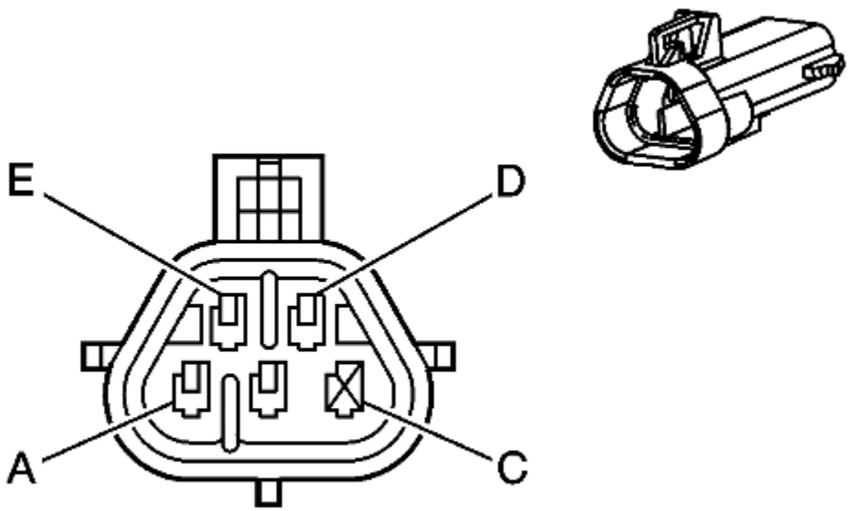

Connector Part Information

Harness Type: Engine
OEM Connector: 12092839
Service Connector: 88987991
Description: 4-Way M Metri-Pack 150 Series, Sealed (BK)

Terminal Part Information

Terminated Lead: Service by Connector Assembly - 88987991
Release Tool: J-38125-12A
Diagnostic Test Probe: J-35616-3 (GY)

B52B Heated Oxygen Sensor 2

Pin	Size	Colour	Circuit	Function	Option
A	0.5	VT/L-BU	3120	Heated Oxygen Sensor High Signal Bank 1 Sensor (2)	-
B	0.5	WH/YE	3121	Heated Oxygen Sensor Low Signal Bank 1 Sensor (2)	-
C	--	--	--	Not Available	--

D	0.5	VT/L-BU	5293	Powertrain Main Relay Fused Supply (4)	-
E	0.5	GY/WH	3122	Heated Oxygen Sensor Heater Low Control Bank 1 Sensor (2)	-

© Copyright Chevrolet. All rights reserved

B55 Bonnet Ajar Switch

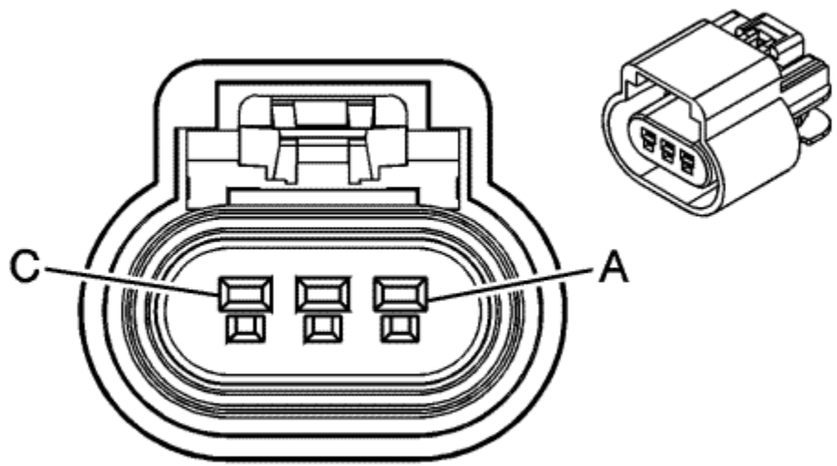

Connector Part Information

Harness Type: Forward Lamp
OEM Connector: 13519047
Service Connector: 15306388
Description: 3-Way F GT 150 Series, Sealed (BK)

Terminal Part Information

Terminated Lead: Service by Connector Assembly - Pending
Release Tool: J-38125-553
Diagnostic Test Probe: J-35616-2A (GY)

B55 Bonnet Ajar Switch

Pin	Size	Colour	Circuit	Function	Option
A	0.5	YE	5530	Bonnet Open Switch Signal	-
B	0.5	BN/L-GN	109	Bonnet Ajar Switch Signal	-
C	0.5	BK	1950	Ground	-

© Copyright Chevrolet. All rights reserved

B59L Front Impact Sensor - Left

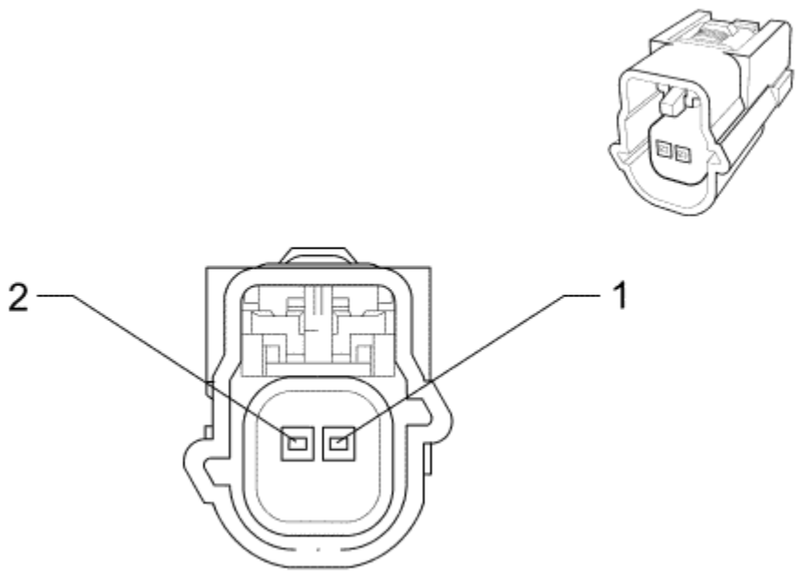

Connector Part Information

Harness Type: Forward Lamp
OEM Connector: 54390242
Service Connector: 13314084
Description: 2-Way F Kaizen 0.64 Series, Sealed (D-GY)

Terminal Part Information

Terminated Lead: Service by Connector Assembly - 13314084
Release Tool: J-38125-215A
Diagnostic Test Probe: J-35616-64B (L-BU)

B59L Front Impact Sensor - Left

Pin	Size	Colour	Circuit	Function	Option
1	0.5	OG/YE	354	Left Front Discriminating Sensor Signal	-

2	0.5	BK/OG	5045	Low Reference	-

© Copyright Chevrolet. All rights reserved

B59R Front Impact Sensor - Right

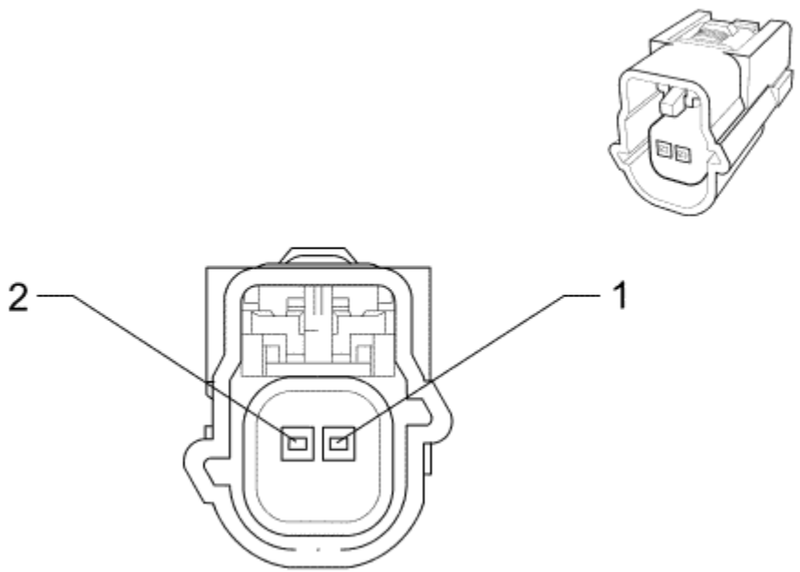

Connector Part Information

Harness Type: Forward Lamp
OEM Connector: 54390242
Service Connector: 13314084
Description: 2-Way F Kaizen 0.64 Series, Sealed (D-GY)

Terminal Part Information

Terminated Lead: Service by Connector Assembly - 13314084
Release Tool: J-38125-215A
Diagnostic Test Probe: J-35616-64B (L-BU)

B59R Front Impact Sensor - Right

Pin	Size	Colour	Circuit	Function	Option
1	0.5	OG/L-GN	1409	Right Front Discriminating Sensor Signal	-

2	0.5	L-GN	5600	Low Reference	-

© Copyright Chevrolet. All rights reserved

Passenger Seat Components

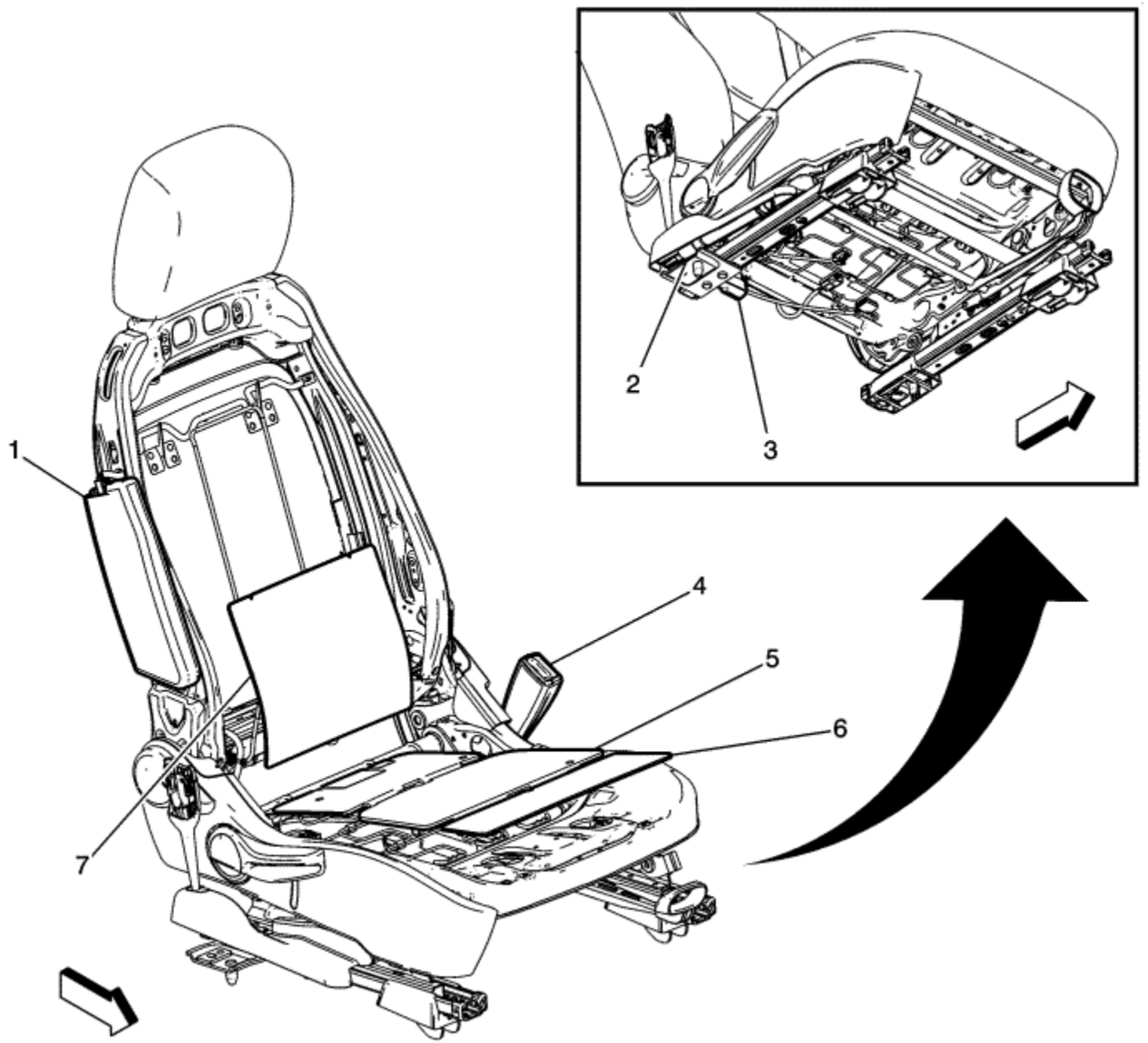

(1) F106R Side Air Bag - Right
(2) F113P Seat Belt Anchor Pretensioner - Passenger
(3) K85 Passenger Presence Detection Module
(4) B88P Seat Belt Switch - Passenger (Part of Buckle)
(5) B60 Passenger Presence Detection Sensor
(6) E14D Seat Heating Element - Passenger Cushion

(7) E14C Seat Heating Element - Passenger Back

© Copyright Chevrolet. All rights reserved

B63LF Side Impact Sensor - Left Front

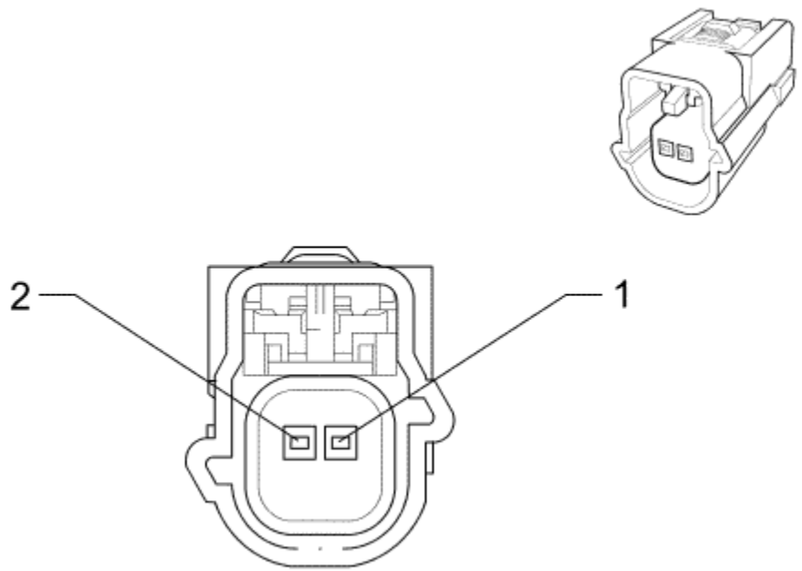

Connector Part Information

Harness Type: Driver Door
OEM Connector: 54390242
Service Connector: 13314084
Description: 2-Way F Kaizen 0.64 Series, Sealed (D-GY)

Terminal Part Information

Terminated Lead: 13575867
Release Tool: J-38125-215A
Diagnostic Test Probe: J-35616-64B (L-BU)

B63LF Side Impact Sensor - Left Front

Pin	Size	Colour	Circuit	Function	Option
1	0.5	L-GN/WH	2132	Left Front Side Impact Sensing Module Signal	-

2	0.5	L-GN	6628	Low Reference	-

© Copyright Chevrolet. All rights reserved

B63LR Side Impact Sensor - Left Rear

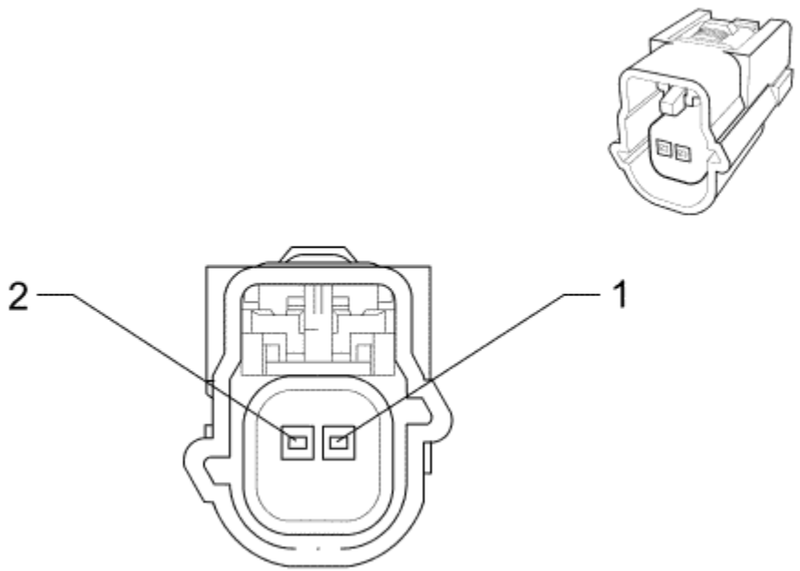

Connector Part Information

Harness Type: Left Rear Door
OEM Connector: 54390242
Service Connector: 13314084
Description: 2-Way F Kaizen 0.64 Series, Sealed (D-GY)

Terminal Part Information

Terminated Lead: 13575867
Release Tool: J-38125-215A
Diagnostic Test Probe: J-35616-64B (L-BU)

B63LR Side Impact Sensor - Left Rear

Pin	Size	Colour	Circuit	Function	Option
1	0.5	OG/L-BU	6620	Left Middle Side Impact Sensing Module Signal	-

2	0.5	L-BU	6621	Low Reference	-

© Copyright Chevrolet. All rights reserved

B63RF Side Impact Sensor - Right Front

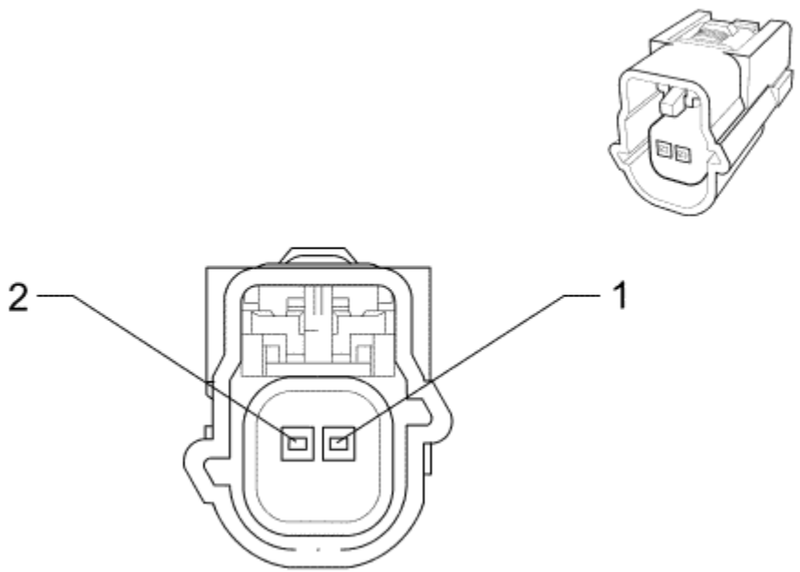

Connector Part Information

Harness Type: Passenger Door
OEM Connector: 54390242
Service Connector: 13314084
Description: 2-Way F Kaizen 0.64 Series, Sealed (D-GY)

Terminal Part Information

Terminated Lead: 13575867
Release Tool: J-38125-215A
Diagnostic Test Probe: J-35616-64B (L-BU)

B63RF Side Impact Sensor - Right Front

Pin	Size	Colour	Circuit	Function	Option
1	0.5	BN/OG	2134	Right Front Side Impact Sensing Module Signal	-

2	0.5	BN/WH	6629	Low Reference	-

© Copyright Chevrolet. All rights reserved

B63RR Side Impact Sensor - Right Rear

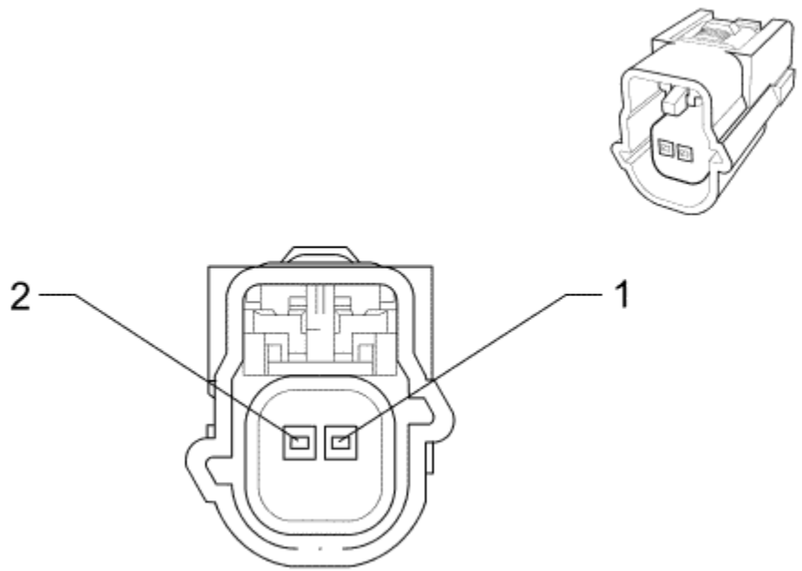

Connector Part Information

Harness Type: Right Rear Door
OEM Connector: 54390242
Service Connector: 13314084
Description: 2-Way F Kaizen 0.64 Series, Sealed (D-GY)

Terminal Part Information

Terminated Lead: 13575867
Release Tool: J-38125-215A
Diagnostic Test Probe: J-35616-64B (L-BU)

B63RR Side Impact Sensor - Right Rear

Pin	Size	Colour	Circuit	Function	Option
1	0.5	OG/VT	6624	Right Middle Side Impact Sensing Module Signal	-

2	0.5	BK/OG	6625	Low Reference	-

© Copyright Chevrolet. All rights reserved

B68 Knock Sensor

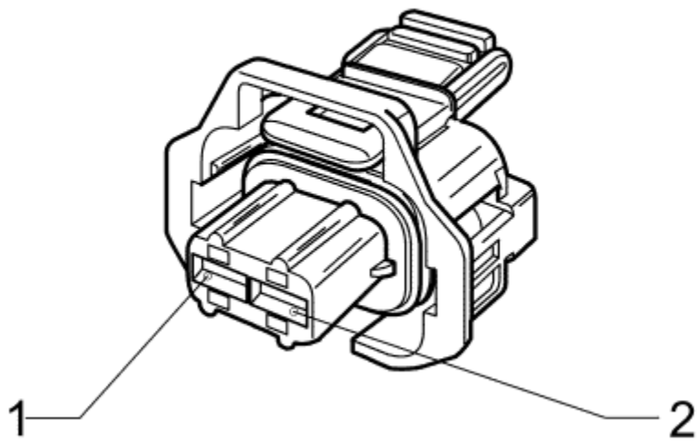

Connector Part Information

Harness Type: Engine
OEM Connector: 1928403698
Service Connector: 88953309
Description: 2-Way F Kompakt Series (BK)

Terminal Part Information

Terminated Lead: Service by Connector Assembly - Pending
Release Tool: J-38125-36
Diagnostic Test Probe: J-35616-35 (VT)

B68 Knock Sensor

Pin	Size	Colour	Circuit	Function	Option
1	0.5	VT/GY	496	Knock Sensor Signal (1)	-

2	0.5	BK/YE	1716	Low Reference	-

© Copyright Chevrolet. All rights reserved

B74 Manifold Absolute Pressure Sensor

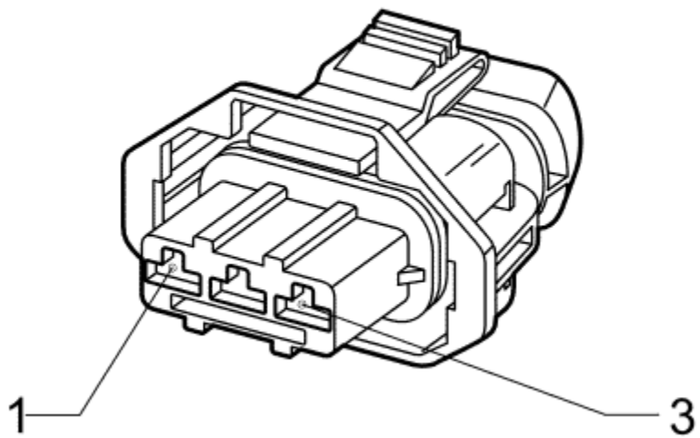

Connector Part Information

Harness Type: Engine
OEM Connector: 1928403870
Service Connector: 88953312
Description: 3-Way F Junior Power Timer Series, Sealed (BK)

Terminal Part Information

Terminated Lead: Service by Connector Assembly - Pending
Release Tool: J-38125-36
Diagnostic Test Probe: J-35616-35 (VT)

B74 Manifold Absolute Pressure Sensor

Pin	Size	Colour	Circuit	Function	Option
1	0.5	GY/RD	2704	5 Volt Reference	-

2	0.5	BK/L-GN	469	Low Reference	--
3	0.5	L-GN/WH	432	Manifold Absolute Pressure Sensor Signal	-

© Copyright Chevrolet. All rights reserved

Engine Compartment Components - Right

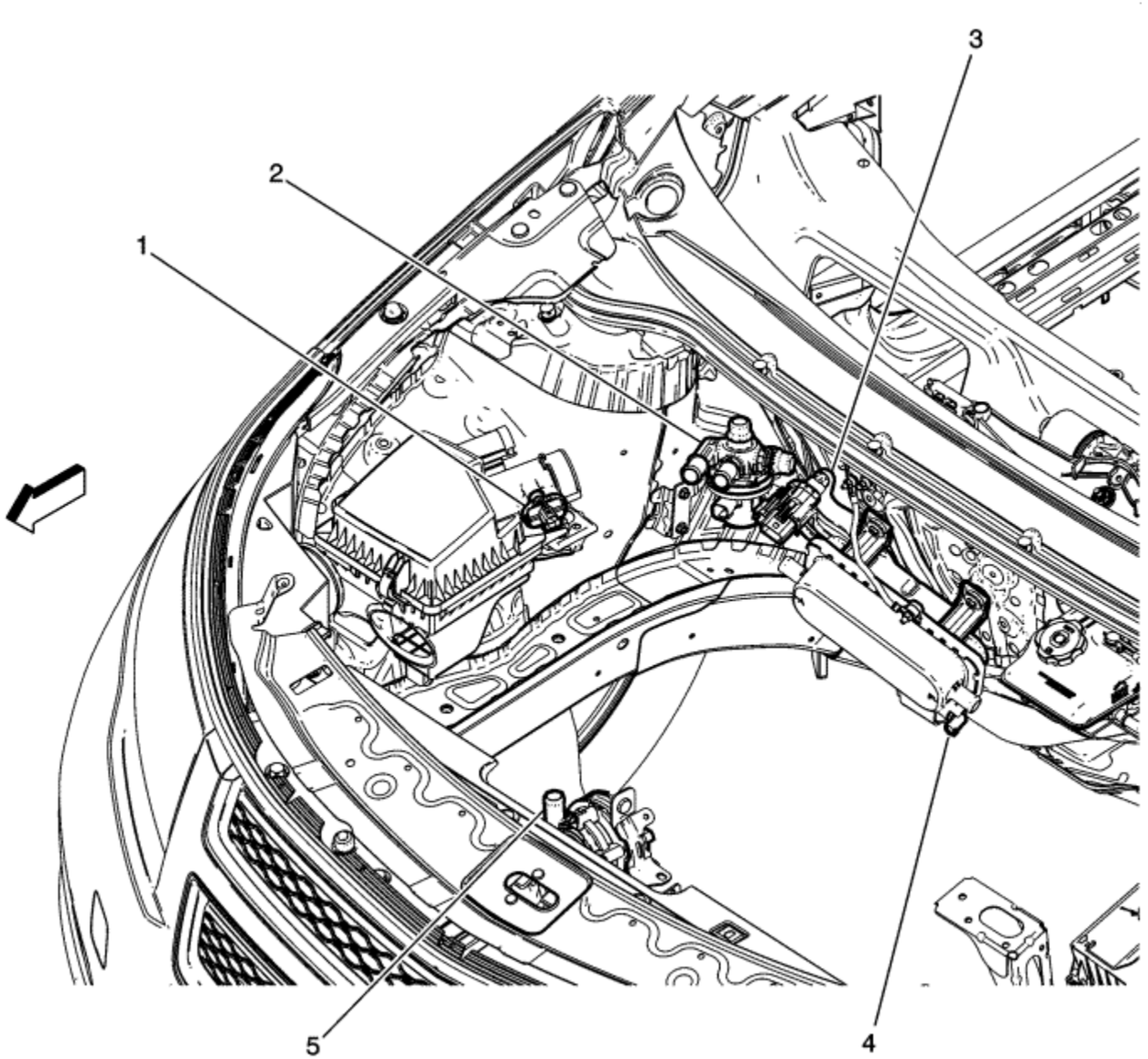

(1) B75B Mass Air Flow/Intake Air Temperature Sensor
(2) Q65 Hybrid Battery Pack Coolant Control Valve
(3) B135 Coolant Heater Temperature Sensor
(4) K10 Coolant Heater Control Module
(5) G36 Auxiliary Heater Coolant Pump

© Copyright Chevrolet. All rights reserved

B75B Mass Airflow/Intake Air Temperature Sensor

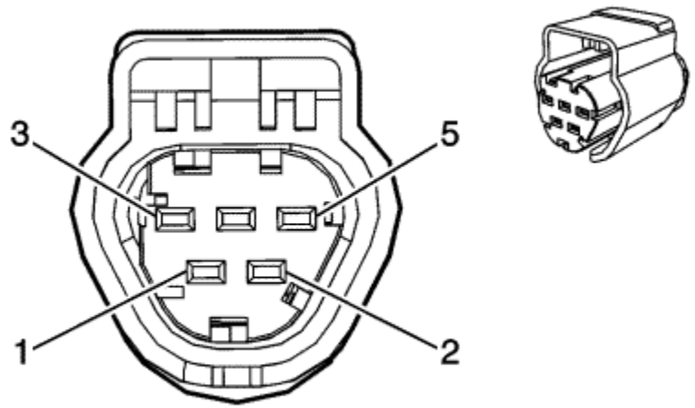

Connector Part Information

Harness Type: Engine
OEM Connector: 1928405138
Service Connector: 13505905
Description: 5-Way M 090 II Series, Sealed (BK)

Terminal Part Information

Terminated Lead: 13576382
Release Tool: Pending
Diagnostic Test Probe: Pending

B75B Mass Airflow/Intake Air Temperature Sensor

Pin	Size	Colour	Circuit	Function	Option
1	0.5	BK/VT	2760	Low Reference	-
2	0.5	YE/L-BU	5494	Cylinder Shut-off Solenoid Control (4)	--
3	0.5	WH/L-BU	6289	Induction Air Temperature Sensor Signal	--
4	0.5	VT/L-BU	5293	Powertrain Main Relay Fused Supply (4)	--
5	0.5	L-GN/WH	492	Mass Air Flow Sensor Signal	-

© Copyright Chevrolet. All rights reserved

Front of Vehicle Components

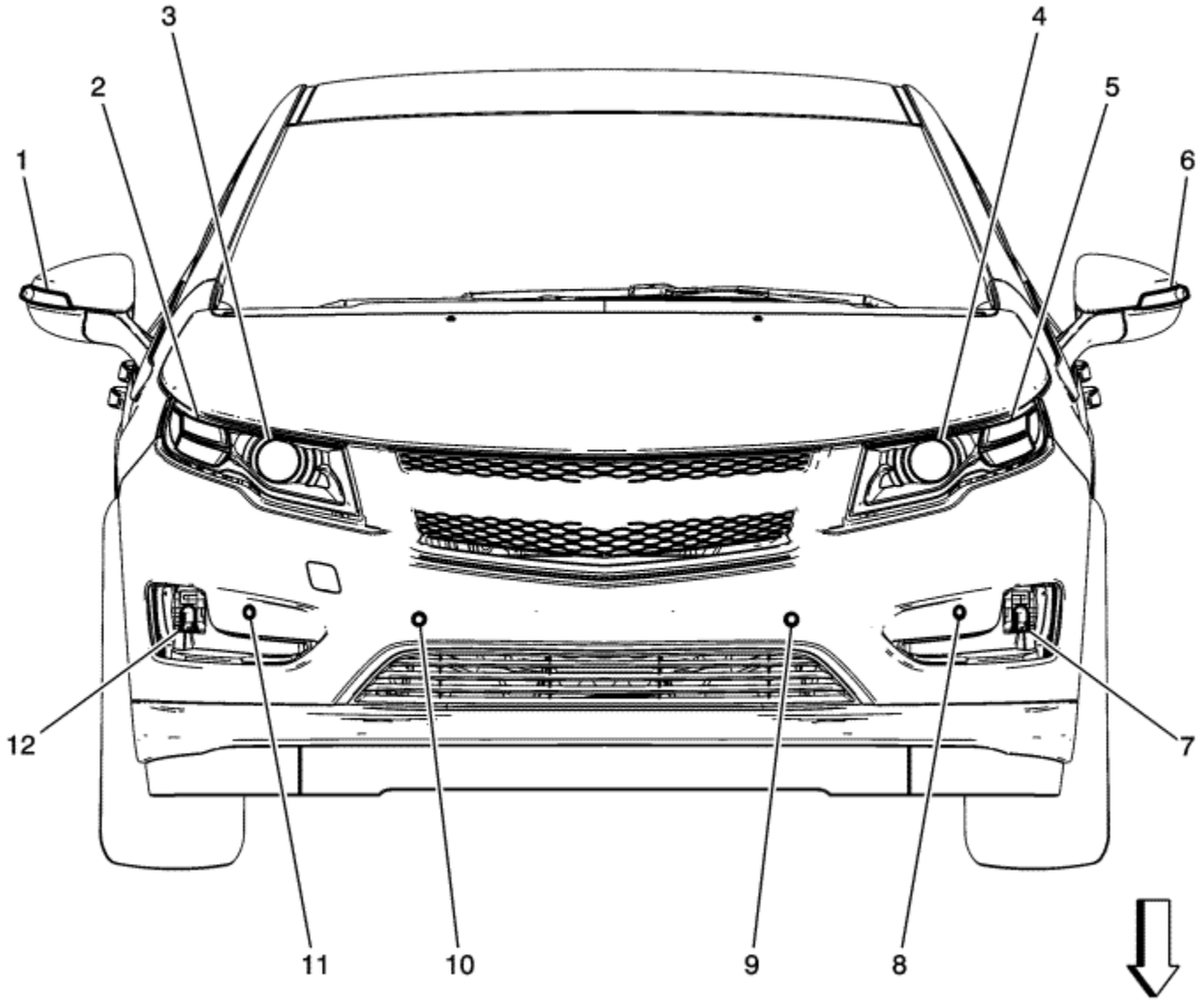

(1) E4Z Indicator Repeater Lamp - Right
(2) E4D Daytime Running Lamp - Right
(3) E13R Headlamp - Right
(4) E13L Headlamp - Left
(5) E4C Daytime Running Lamp - Left
(6) E4Y Indicator Repeater Lamp - Left

(7) E4N Park/Indicator Lamp - Left
(8) B78A Front Object Sensor - Left Outer
(9) B78C Front Object Sensor - Left Middle
(10) B78D Front Object Sensor - Right Middle
(11) B78B Front Object Sensor - Right Outer
(12) E4P Park/Indicator Lamp - Right

© Copyright Chevrolet. All rights reserved

B78A Front Object Sensor - Left Outer

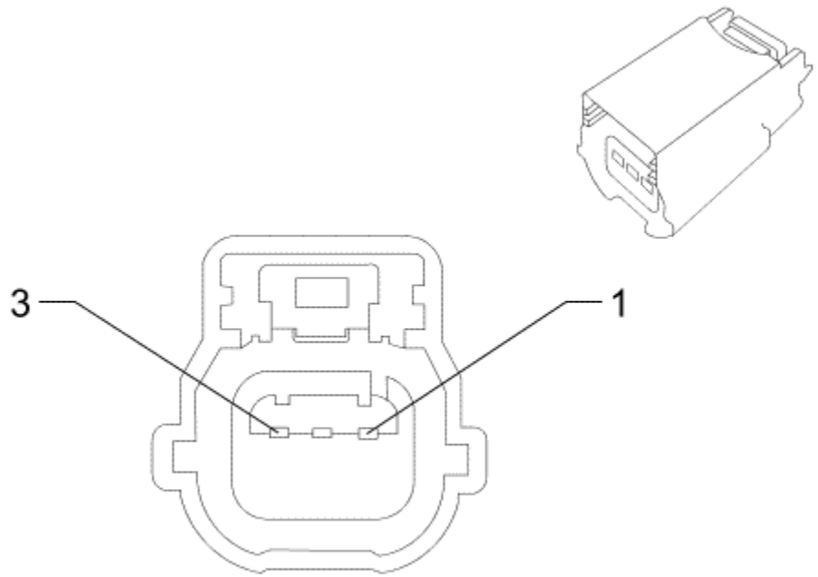

Connector Part Information

Harness Type: Front Fascia
OEM Connector: 31404-3700
Service Connector: 88988337
Description: 3-Way F 64 Series, Sealed (BK)

Terminal Part Information

Terminated Lead: 13575845
Release Tool: J-38125-215A
Diagnostic Test Probe: J-35616-64B (L-BU)

B78A Front Object Sensor - Left Outer

Pin	Size	Colour	Circuit	Function	Option
1	0.5	RD/L-BU	5974	Park Assist Sensor Supply Voltage Park	-

2	0.5	BK/L-BU	5214	Low Reference	--
3	0.5	VT/WH	5215	Front Parking Left Corner Sensor	-

© Copyright Chevrolet. All rights reserved

B78B Front Object Sensor - Right Outer

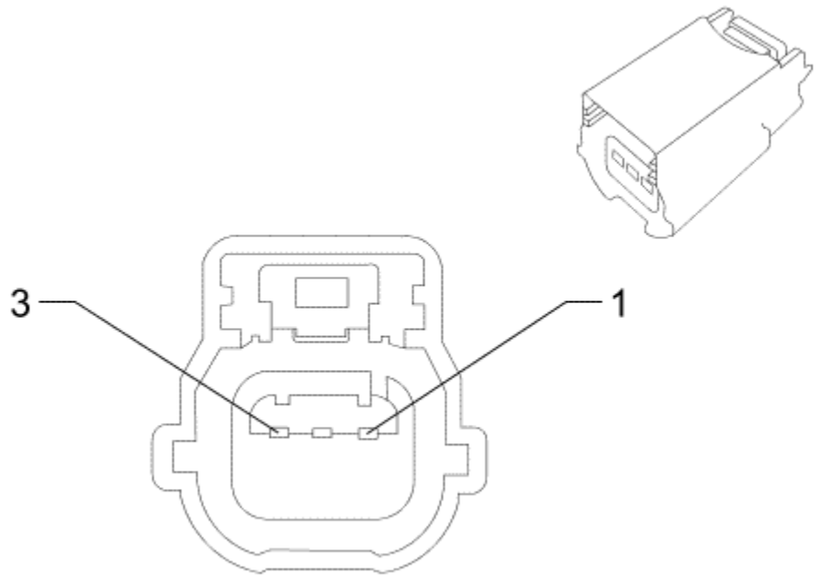

Connector Part Information

Harness Type: Front Fascia
OEM Connector: 31404-3700
Service Connector: 88988337
Description: 3-Way F 64 Series, Sealed (BK)

Terminal Part Information

Terminated Lead: 13575845
Release Tool: J-38125-215A
Diagnostic Test Probe: J-35616-64B (L-BU)

B78B Front Object Sensor - Right Outer

Pin	Size	Colour	Circuit	Function	Option
1	0.5	RD/L-BU	5974	Park Assist Sensor Supply Voltage Park	-

2	0.5	BK/L-BU	5214	Low Reference	--
3	0.5	WH/GY	5217	Front Parking Right Corner Sensor	-

© Copyright Chevrolet. All rights reserved

B78C Front Object Sensor - Left Middle

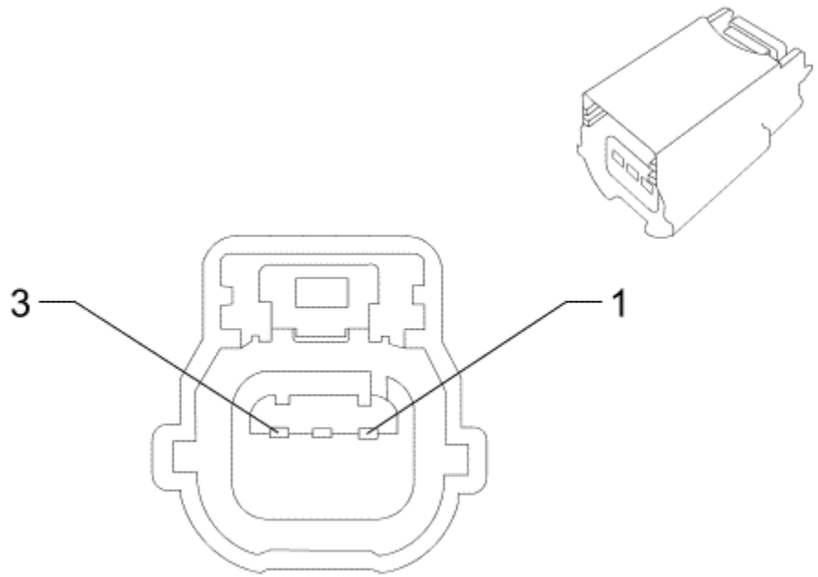

Connector Part Information

Harness Type: Front Fascia
OEM Connector: 31404-3700
Service Connector: 88988337
Description: 3-Way F 64 Series, Sealed (BK)

Terminal Part Information

Terminated Lead: 13575845
Release Tool: J-38125-215A
Diagnostic Test Probe: J-35616-64B (L-BU)

B78C Front Object Sensor - Left Middle

Pin	Size	Colour	Circuit	Function	Option
1	0.5	RD/L-BU	5974	Park Assist Sensor Supply Voltage Park	-

2	0.5	BK/L-BU	5214	Low Reference	--
3	0.5	YE/GY	5216	Front Parking Left Mid Sensor	-

© Copyright Chevrolet. All rights reserved

B78D Front Object Sensor - Right Middle

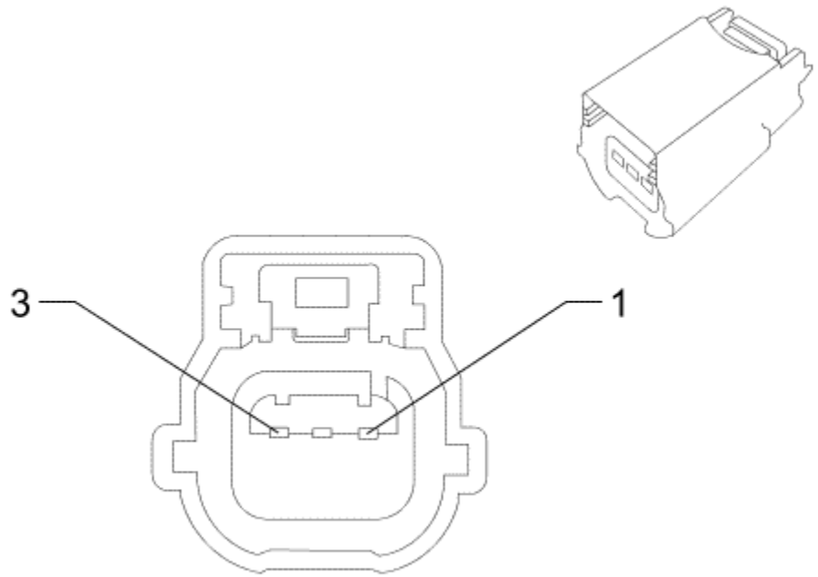

Connector Part Information

Harness Type: Front Fascia
OEM Connector: 31404-3700
Service Connector: 88988337
Description: 3-Way F 64 Series, Sealed (BK)

Terminal Part Information

Terminated Lead: 13575845
Release Tool: J-38125-215A
Diagnostic Test Probe: J-35616-64B (L-BU)

B78D Front Object Sensor - Right Middle

Pin	Size	Colour	Circuit	Function	Option
1	0.5	RD/L-BU	5974	Park Assist Sensor Supply Voltage Park	-

2	0.5	BK/L-BU	5214	Low Reference	--
3	0.5	VT/GY	5218	Front Parking Right Mid Sensor	-

© Copyright Chevrolet. All rights reserved

Rear of Vehicle Components

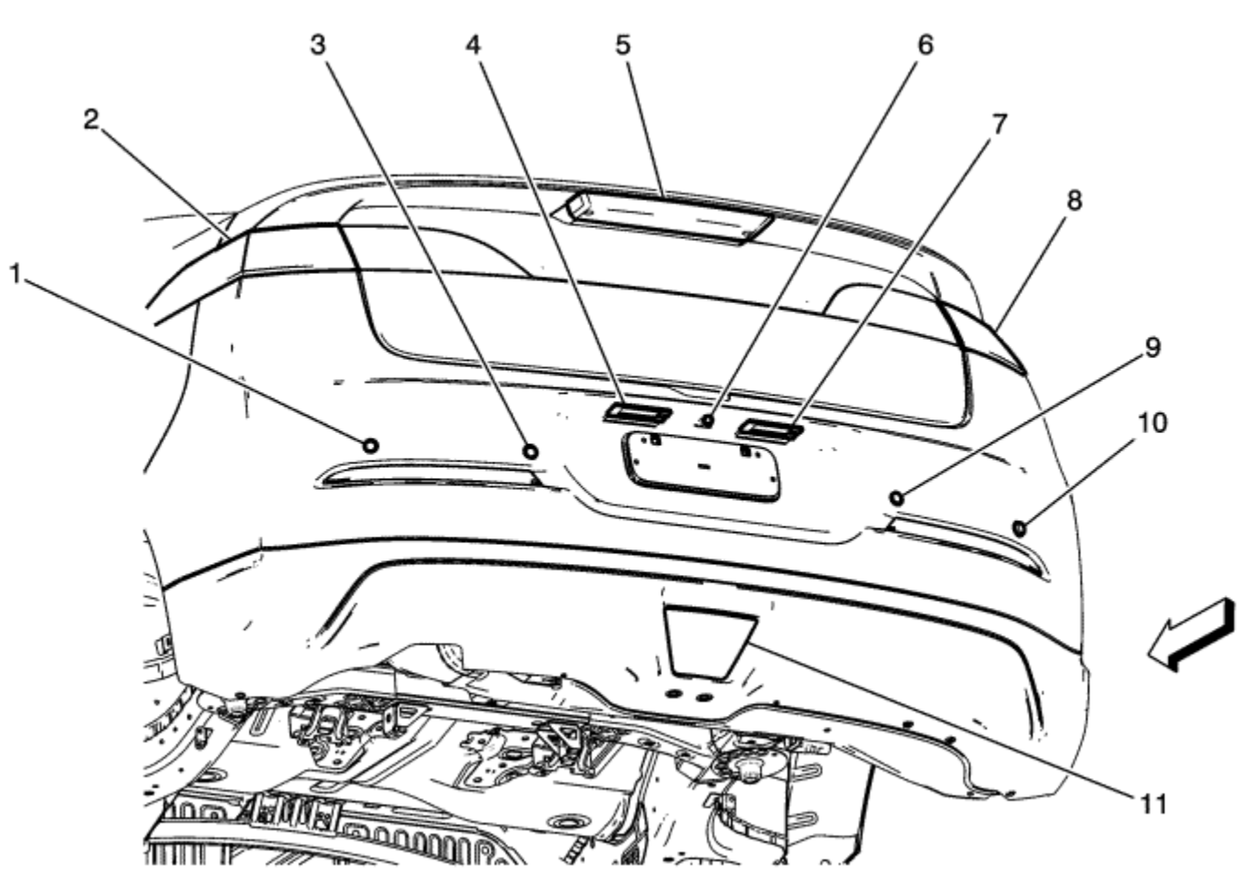

(1) B78G Rear Object Sensor - Left Outer
(2) E5E Tail Lamp - Left
(3) B78E Rear Object Sensor - Left Middle
(4) E7L Number Plate Lamp - Left
(5) E6 Centre High Mounted Brake Lamp
(6) B87 Rear-view Camera

(7) E7R Number Plate Lamp - Right
(8) E5F Tail Lamp - Right
(9) B78F Rear Object Sensor - Right Middle
(10) B78H Rear Object Sensor - Right Outer
(11) E5 Reversing Light

© Copyright Chevrolet. All rights reserved

B78E Rear Object Sensor - Left Middle

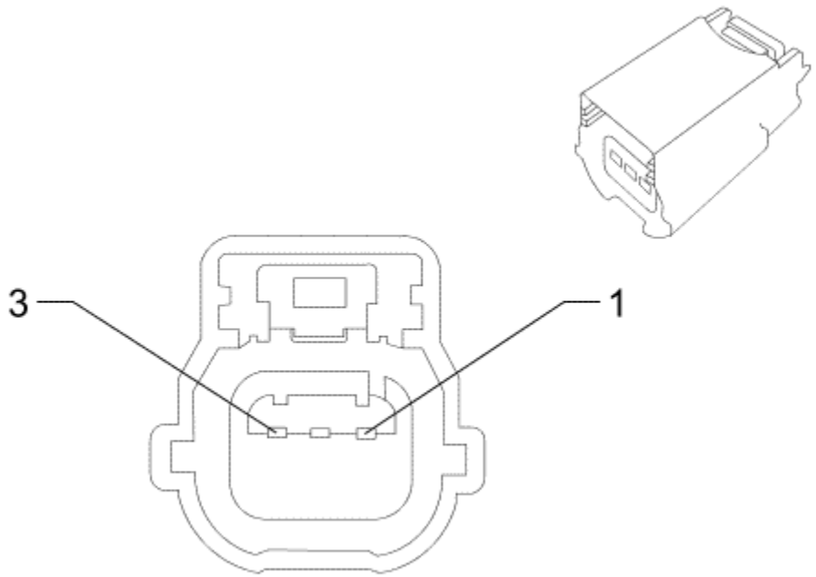

Connector Part Information

Harness Type: Rear Fascia
OEM Connector: 31404-3700
Service Connector: 88988337
Description: 3-Way F 64 Series, Sealed (BK)

Terminal Part Information

Terminated Lead: 13575845
Release Tool: J-38125-215A
Diagnostic Test Probe: J-35616-64B (L-BU)

B78E Rear Object Sensor - Left Middle

Pin	Size	Colour	Circuit	Function	Option
1	0.5	RD/VT	5974	Park Assist Sensor Supply Voltage Park	-

2	0.5	BK/GY	2379	Low Reference	--
3	0.5	YE/L-BU	2376	Left Rear Middle Object Sensor Signal	-

© Copyright Chevrolet. All rights reserved

B78F Rear Object Sensor - Right Middle

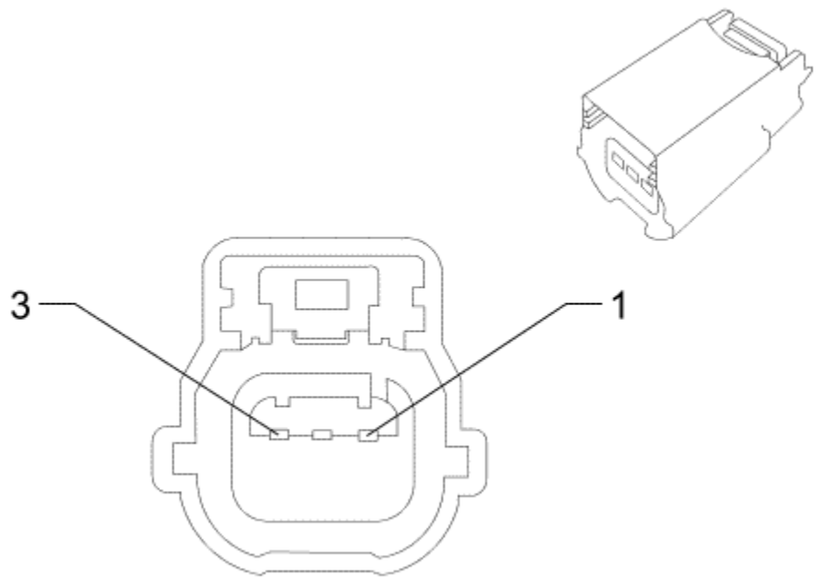

Connector Part Information

Harness Type: Rear Fascia
OEM Connector: 31404-3700
Service Connector: 88988337
Description: 3-Way F 64 Series, Sealed (BK)

Terminal Part Information

Terminated Lead: 13575845
Release Tool: J-38125-215A
Diagnostic Test Probe: J-35616-64B (L-BU)

B78F Rear Object Sensor - Right Middle

Pin	Size	Colour	Circuit	Function	Option
1	0.5	RD/VT	5974	Park Assist Sensor Supply Voltage Park	-

2	0.5	BK/GY	2379	Low Reference	--
3	0.5	YE/WH	2377	Right Rear Middle Object Sensor Signal	-

© Copyright Chevrolet. All rights reserved

B78G Rear Object Sensor - Left Outer

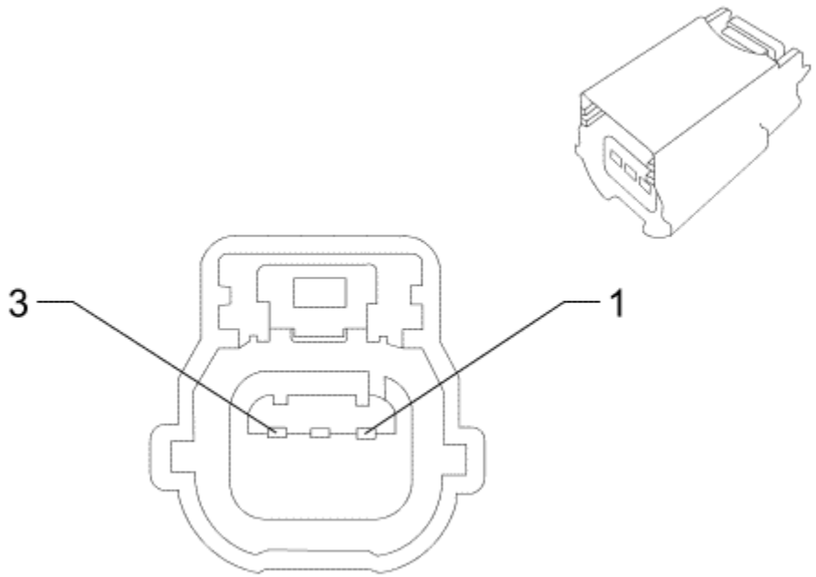

Connector Part Information

Harness Type: Rear Fascia
OEM Connector: 31404-3700
Service Connector: 88988337
Description: 3-Way F 64 Series, Sealed (BK)

Terminal Part Information

Terminated Lead: 13575845
Release Tool: J-38125-215A
Diagnostic Test Probe: J-35616-64B (L-BU)

B78G Rear Object Sensor - Left Outer

Pin	Size	Colour	Circuit	Function	Option
1	0.5	RD/VT	5974	Park Assist Sensor Supply Voltage Park	-

2	0.5	BK/GY	2379	Low Reference	--
3	0.5	YE	2375	Left Rear Corner Object Sensor Signal	-

© Copyright Chevrolet. All rights reserved

B78H Rear Object Sensor - Right Outer

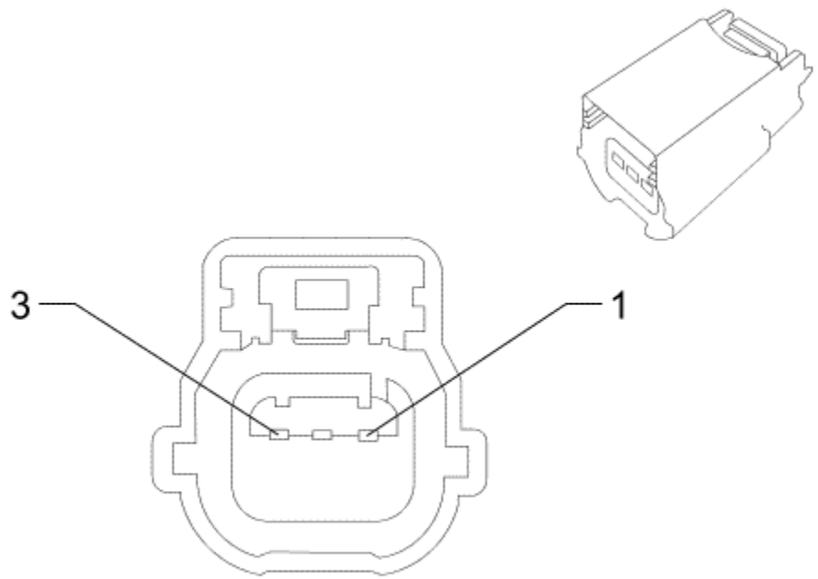

Connector Part Information

Harness Type: Rear Fascia
OEM Connector: 31404-3700
Service Connector: 88988337
Description: 3-Way F 64 Series, Sealed (BK)

Terminal Part Information

Terminated Lead: 13575845
Release Tool: J-38125-215A
Diagnostic Test Probe: J-35616-64B (L-BU)

B78H Rear Object Sensor - Right Outer

Pin	Size	Colour	Circuit	Function	Option
1	0.5	RD/VT	5974	Park Assist Sensor Supply Voltage Park	-

2	0.5	BK/GY	2379	Low Reference	--
3	0.5	YE/VT	2378	Right Rear Corner Object Sensor Signal	-

© Copyright Chevrolet. All rights reserved

B87 Rear-view Camera

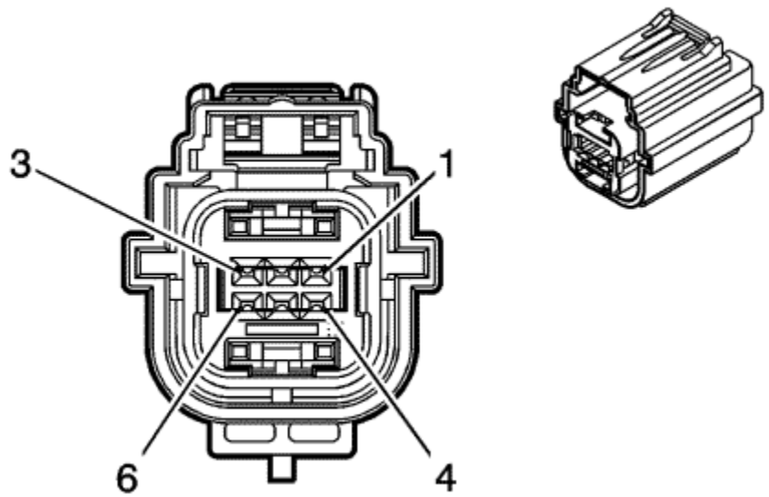

Connector Part Information

Harness Type: Rear Fascia
OEM Connector: 1924211-1
Service Connector: Service by Harness - See Part Catalog
Description: 6-Way F 0.64 Series Sealed (NA)

Terminal Part Information

Terminated Lead: 13575845
Release Tool: J-38125-215A
Diagnostic Test Probe: J-35616-64B (L-BU)

B87 Rear-view Camera

Pin	Size	Colour	Circuit	Function	Option
1	0.5	GY/YE	6972	Camera Signal #2 +	-
2	0.5	BK	6974	Camera Drain Wire	--
3	0.5	L-GN/WH	1324	Reverse Lamp Supply Voltage	-
4	0.5	WH/L-BU	6973	Camera Signal #2	--

5	0.5	BK	850	Ground	--
6	0.5	VT/L-GN	439	Run/Crank Ignition 1 Voltage	-

© Copyright Chevrolet. All rights reserved

Driver's Seat Components

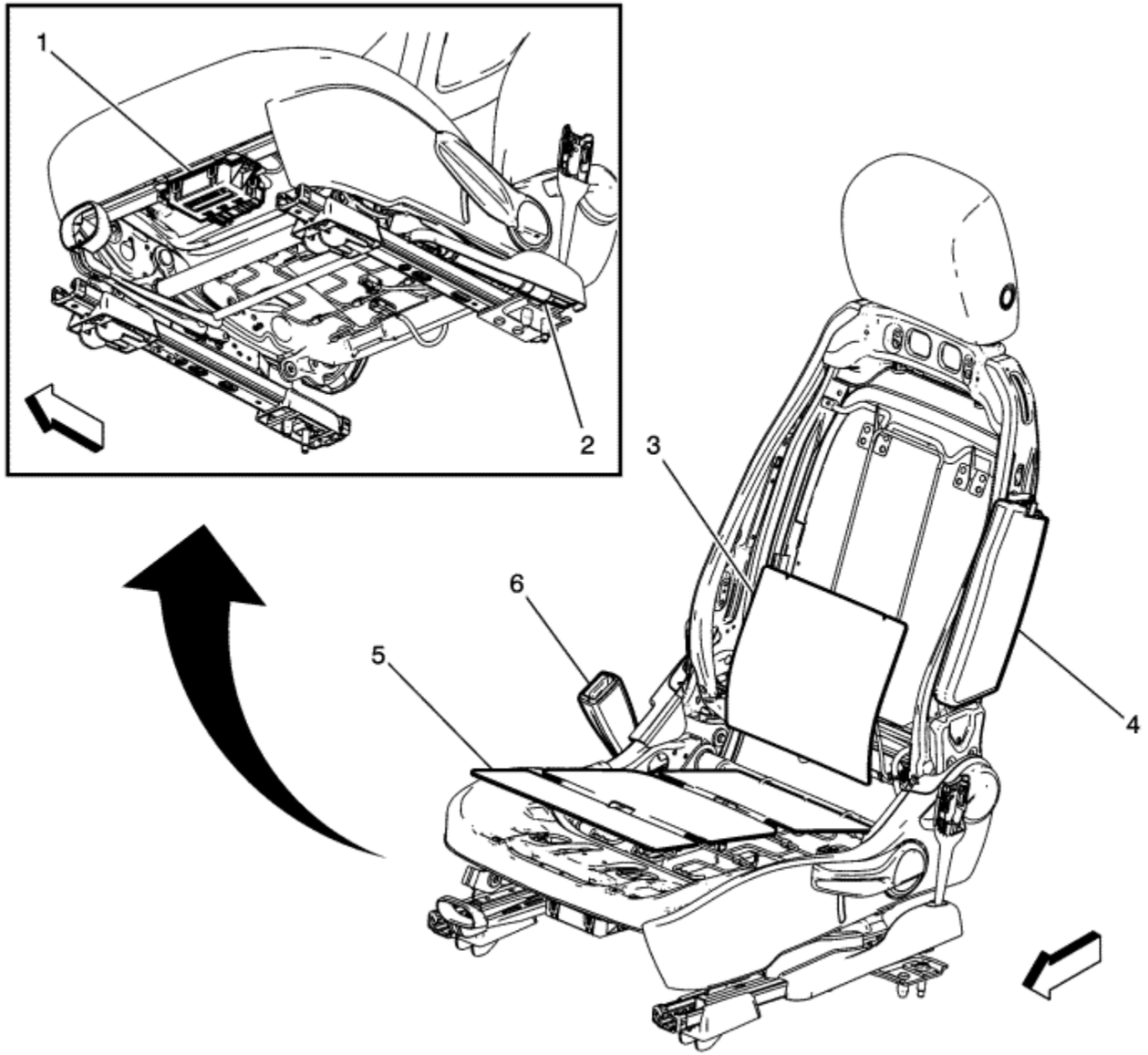

(1) K29 Seat Heating Control Module
(2) F113D Seat Belt Anchor Pretensioner - Driver
(3) E14A Seat Heating Element - Driver Back
(4) F106L Side Air Bag - Left
(5) E14B Seat Heating Element - Driver Cushion
(6) B88D Seat Belt Switch - Driver's (Part of Buckle)

© Copyright Chevrolet. All rights reserved

B88D Seat Belt Switch - Driver

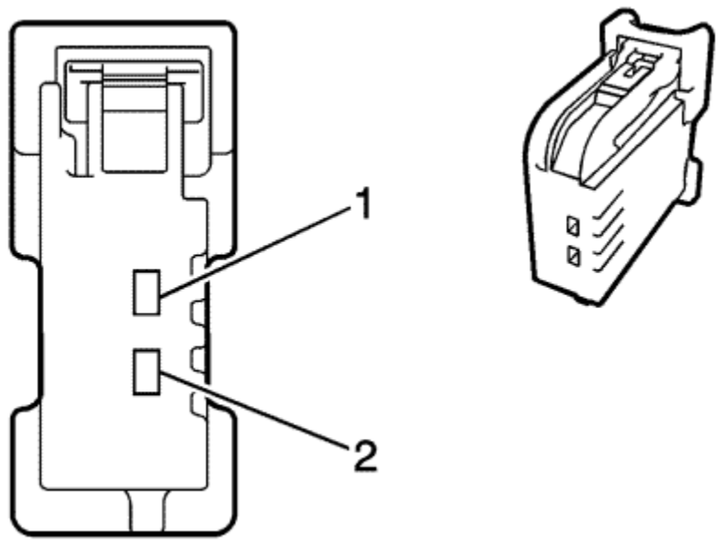

Connector Part Information

Harness Type: Driver Seat
OEM Connector: 6098-5510
Service Connector: 13580105
Description: 2-Way F 0.64 Series (BK)

Terminal Part Information

Terminated Lead: 13575579
Release Tool: J-38125-553
Diagnostic Test Probe: J-35616-2A (GY)

B88D Seat Belt Switch - Driver

Pin	Size	Colour	Circuit	Function	Option
1	0.35	TN/WH	238	Driver Seat Belt Switch Signal	-
2	0.35	D-BU	1363	Driver Seat Belt Switch Low Reference	-

© Copyright Chevrolet. All rights reserved

Rear Seat Components

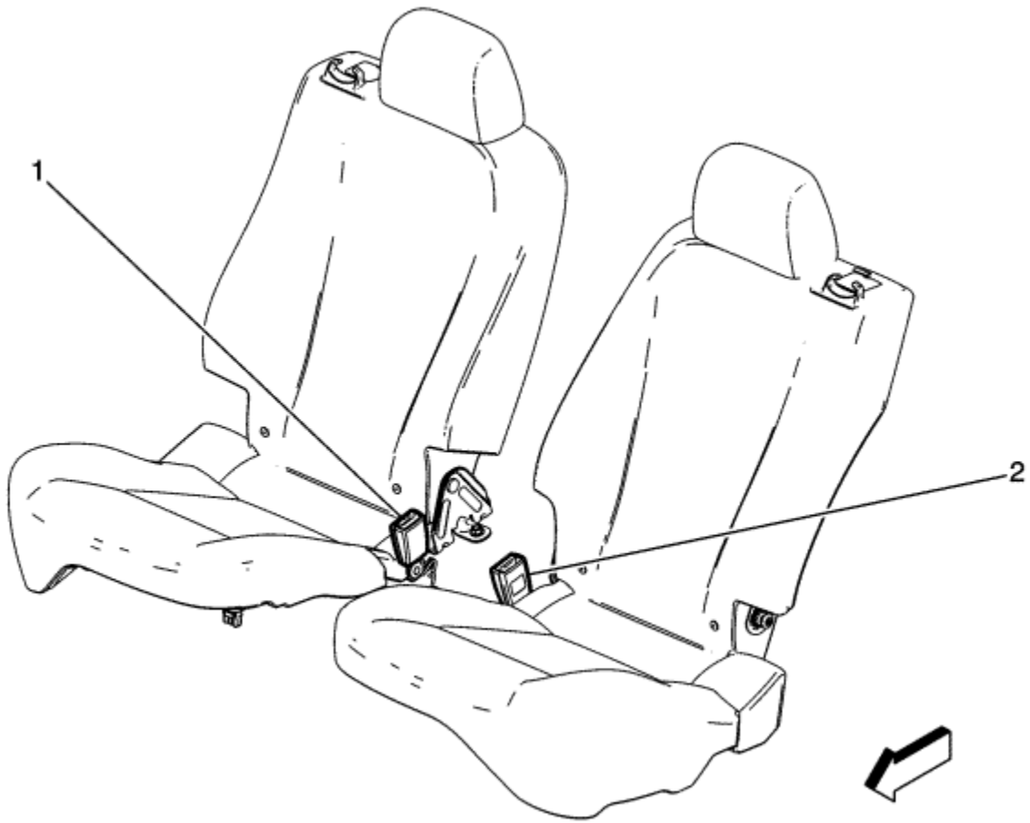

(1) B88RR Seat Belt Switch - Right Rear (Part of Buckle)
(2) B88LR Seat Belt Switch - Left Rear (Part of Buckle)

© Copyright Chevrolet. All rights reserved

B88LR Seat Belt Switch - Left Rear

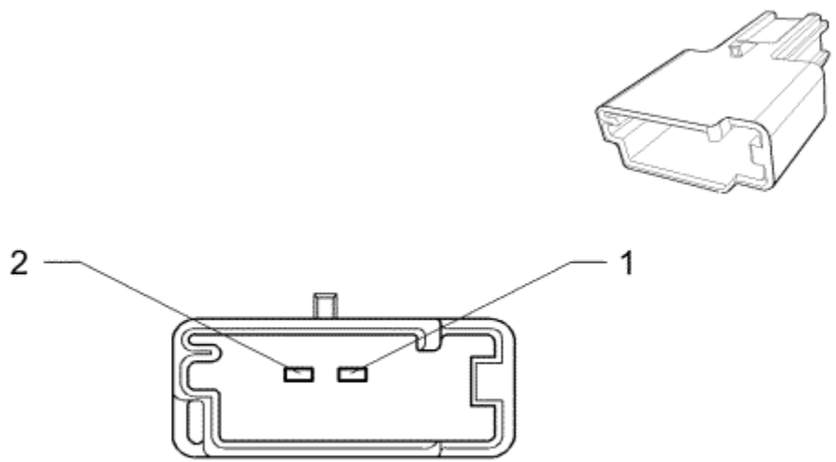

Connector Part Information

Harness Type: Body
OEM Connector: 6098-5513
Service Connector: 13577524
Description: 2-Way M 1.5 Series (BK)

Terminal Part Information

Terminated Lead: Service by Connector Assembly - Pending
Release Tool: J-38125-553
Diagnostic Test Probe: J-35616-3 (GY)

B88LR Seat Belt Switch - Left Rear

Pin	Size	Colour	Circuit	Function	Option
1	0.5	YE/RD	5161	Left Rear Seat Belt Switch Signal	-
2	0.5	BK/OG	1361	Low Reference	-

© Copyright Chevrolet. All rights reserved

B88P Seat Belt Switch - Passenger

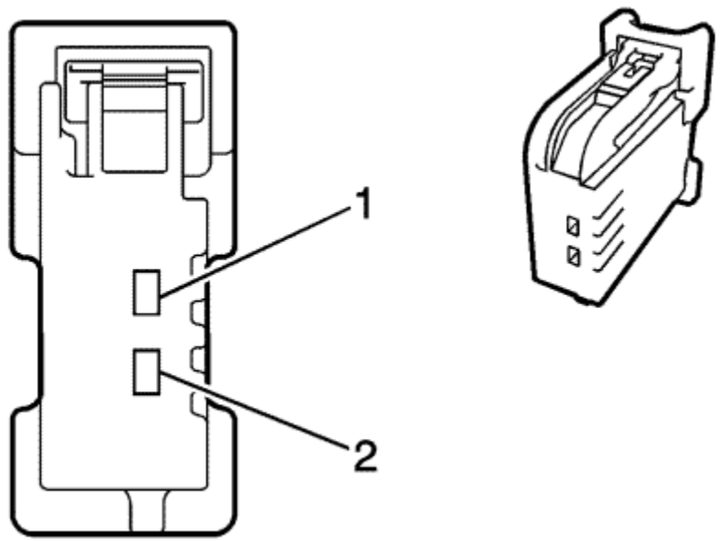

Connector Part Information

Harness Type: Passenger Seat
OEM Connector: 6098-5510
Service Connector: 13580105
Description: 2-Way F 0.64 Series (BK)

Terminal Part Information

Terminated Lead: 13575579
Release Tool: J-38125-553
Diagnostic Test Probe: J-35616-2A (GY)

B88P Seat Belt Switch - Passenger

Pin	Size	Colour	Circuit	Function	Option
1	0.35	OG	1362	Passenger Seat Belt Switch Signal	--
2	0.35	L-BU	1361	Passenger Seat Belt Switch Low Reference	-

© Copyright Chevrolet. All rights reserved

B88RR Seat Belt Switch - Right Rear

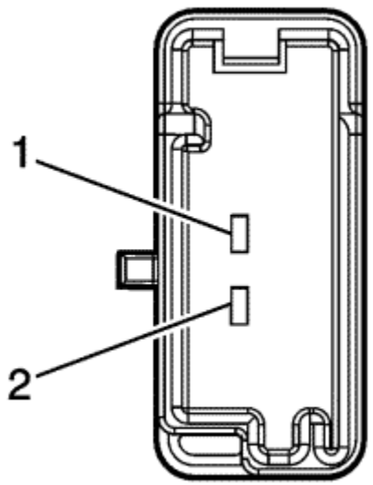

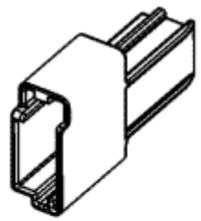

Connector Part Information

Harness Type: Body
OEM Connector: 6098-5529
Service Connector: 13577525
Description: 2-Way M (GY)

Terminal Part Information

Terminated Lead: Service by Connector Assembly - Pending
Release Tool: J-38125-553
Diagnostic Test Probe: J-35616-3 (GY)

B88RR Seat Belt Switch - Right Rear

Pin	Size	Colour	Circuit	Function	Option
1	0.5	BN/WH	5162	Right Rear Seat Belt Switch Signal	-
2	0.5	BK/OG	1361	Low Reference	-

© Copyright Chevrolet. All rights reserved

Steering Column Components

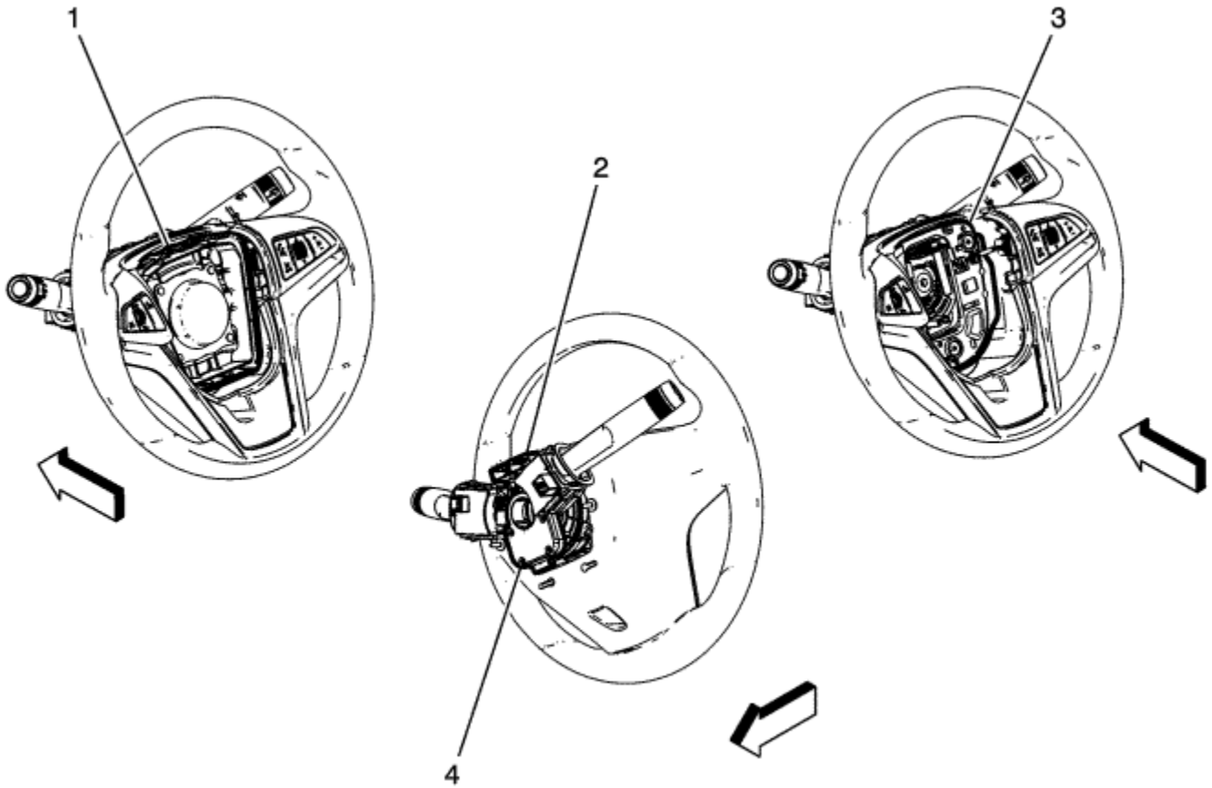

(1) F107 Steering Wheel Air Bag
(2) X85 Steering Wheel Air Bag Coil
(3) S33 Horn Switch
(4) B99 Steering Wheel Angle Sensor

© Copyright Chevrolet. All rights reserved

B99 Steering Wheel Angle Sensor

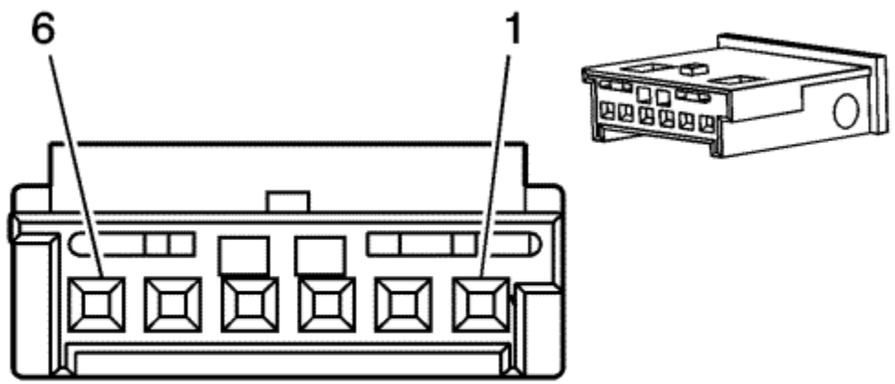

Connector Part Information

Harness Type: Instrument Panel
OEM Connector: 1-1241370-3
Service Connector: 13505903
Description: 6-Way F MQS Series (BK)

Terminal Part Information

Terminated Lead: Service by Connector Assembly - 13505903
Release Tool: J-38125-12A
Diagnostic Test Probe: J-35616-64B (L-BU)

B99 Steering Wheel Angle Sensor

Pin	Size	Colour	Circuit	Function	Option
1	0.5	WH	6106	High Speed GMLAN Serial Data (-) (2)	-
2	0.5	WH	6106	High Speed GMLAN Serial Data (-) (2)	--
3	0.5	L-BU/YE	6105	High Speed GMLAN Serial Data (+) (2)	-

4	0.5	L-BU/YE	6105	High Speed GMLAN Serial Data (+) (2)	--
5	0.35	L-GN/BN	2087	Combined Vehicle Inertial Sensor Supply Voltage	--
6	0.5	BK	1650	Ground	-

© Copyright Chevrolet. All rights reserved

B107 Accelerator Pedal Position Sensor

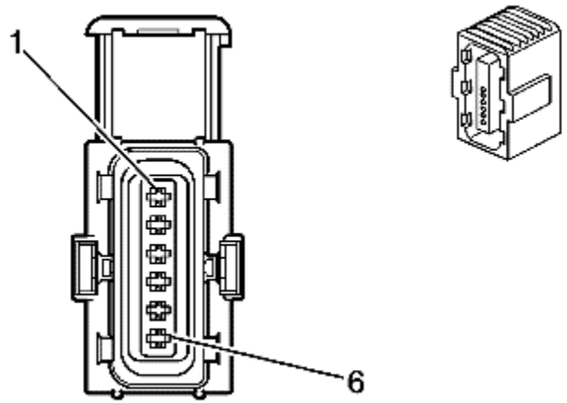

Connector Part Information

Harness Type: Instrument Panel
OEM Connector: 6-929264-1
Service Connector: 89046653
Description: 6-Way F MT2 Housing (BK)

Terminal Part Information

Terminated Lead: Service by Connector Assembly - 89046653
Release Tool: J-38125-560
Diagnostic Test Probe: J-35616-14 (GN)

B107 Accelerator Pedal Position Sensor

Pin	Size	Colour	Circuit	Function	Option
1	0.35	BN/RD	1274	5 Volt Reference	-
2	0.35	WH/RD	1164	5 Volt Reference	--
3	0.35	YE/WH	1161	Accelerator Pedal Position Signal (1)	-
4	0.35	BK/L-BU	1271	Low Reference	-
5	0.35	BK/VT	1272	Low Reference	--
6	0.35	L-GN/WH	1162	Accelerator Pedal Position Signal (2)	-

© Copyright Chevrolet. All rights reserved

B118 Windscreen Washer Fluid Level Sensor

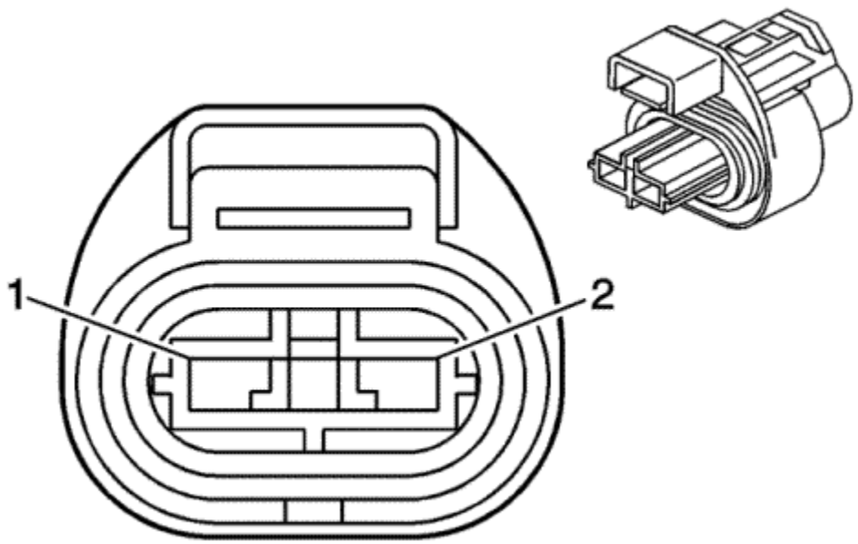

Connector Part Information

Harness Type: Forward Lamp
OEM Connector: 1452680-1
Service Connector: 13314083
Description: 2-Way F 1.2 Timer Series, Sealed (BK)

Terminal Part Information

Terminated Lead: Service by Connector Assembly - 13314083
Release Tool: J-38125-560
Diagnostic Test Probe: J-35616-14 (GN)

B118 Windscreen Washer Fluid Level Sensor

Pin	Size	Colour	Circuit	Function	Option
1	0.5	VT	185	Low Washer Fluid Indicator Control	-
2	0.5	BK	1950	Ground	-

© Copyright Chevrolet. All rights reserved

Passenger Compartment Components

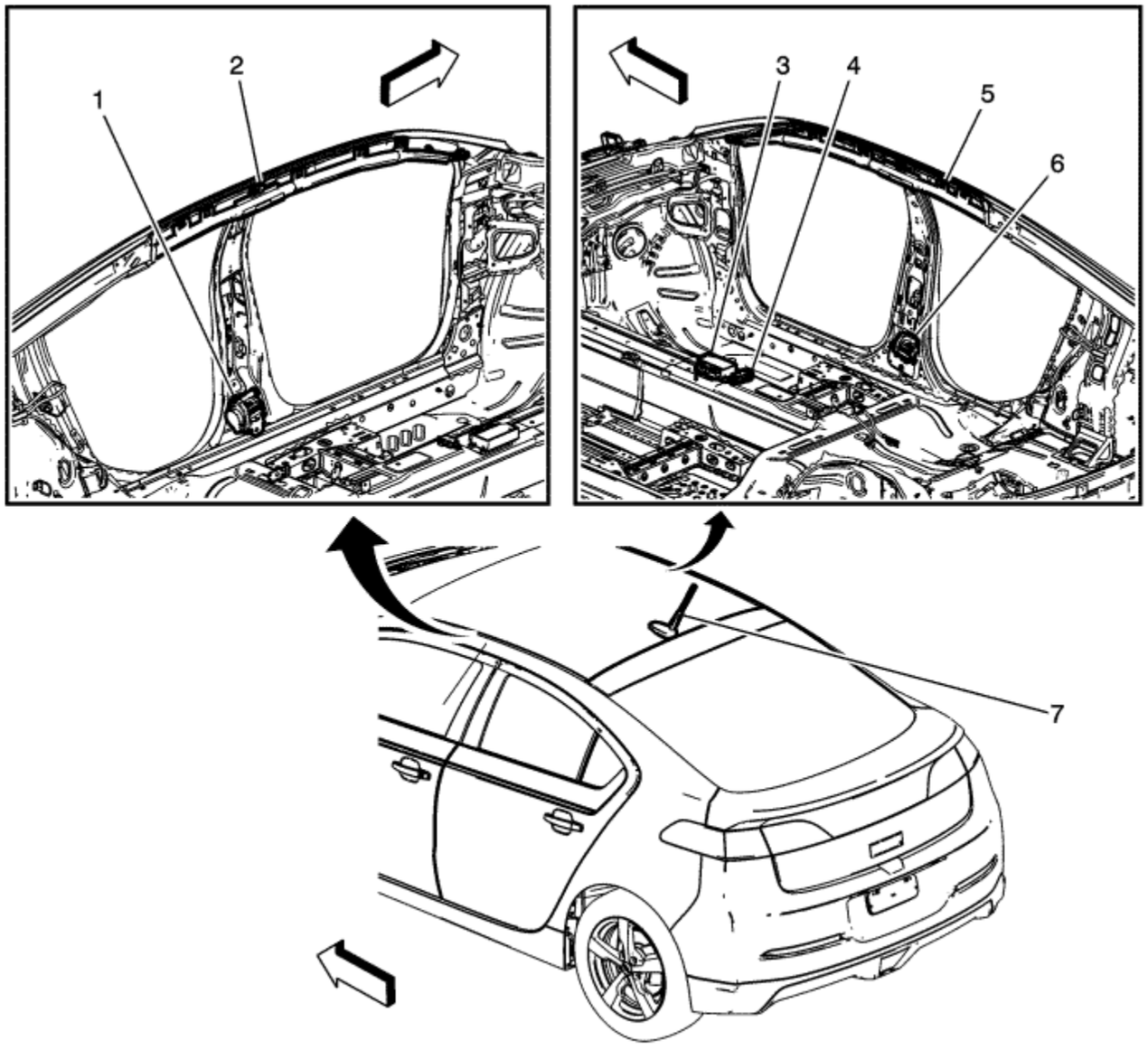

(1) F112D Seat Belt Retractor Pretensioner - Driver
(2) F105L Roof Rail Air Bag - Left
(3) K36 Inflatable Restraint Sensing and Diagnostic Module
(4) B119 Multi-axis Acceleration Sensor
(5) F105R Roof Rail Air Bag - Right
(6) F112P Seat Belt Retractor Pretensioner - Passenger

(7) T4G Cellular Phone, Navigation and Digital Radio Aerial

© Copyright Chevrolet. All rights reserved

B119 Multi-Axis Acceleration Sensor

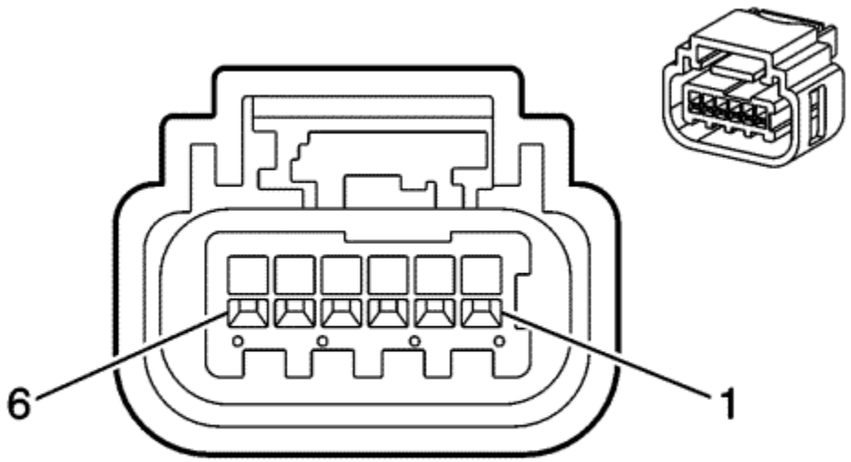

Connector Part Information

Harness Type: Body
OEM Connector: 47715-6102
Service Connector: 13314079
Description: 6-Way F 0.64 Series, Sealed (BK)

Terminal Part Information

Terminated Lead: Service by Connector Assembly - 13314079
Release Tool: J-38125-215A
Diagnostic Test Probe: J-35616-64B (L-BU)

B119 Multi-Axis Acceleration Sensor

Pin	Size	Colour	Circuit	Function	Option
1	0.5	WH	6106	High Speed GMLAN Serial Data (-) (2)	-
2	--	--	--	Not Available	--
3	0.5	L-BU/YE	6105	High Speed GMLAN Serial Data (+) (2)	--

4	--	--	--	Not Available	--
5	0.5	L-GN/BN	2087	Combined Vehicle Inertial Sensor Supply Voltage	--
6	0.5	BK	1450	Ground	-

© Copyright Chevrolet. All rights reserved

B135 Coolant Heater Temperature Sensor

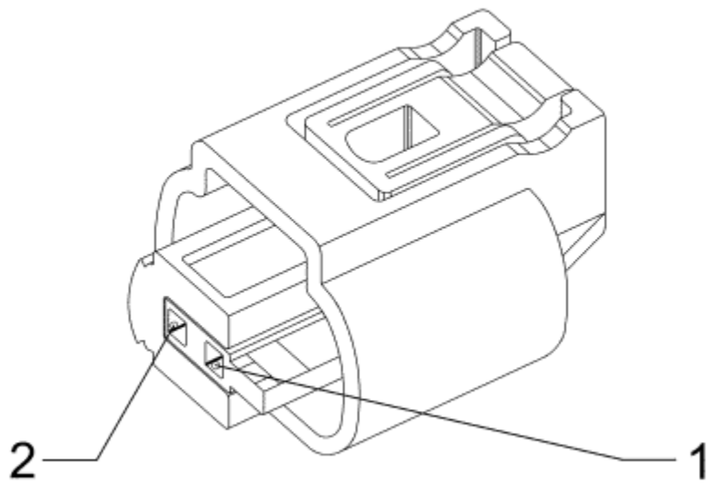

Connector Part Information

Harness Type: Body
OEM Connector: 1-967644-1
Service Connector: 13576533
Description: 2-Way F 0.64 MQS Series, Sealed (BK)

Terminal Part Information

Terminated Lead: Service by Connector Assembly - 13576533
Release Tool: J-38125-12A
Diagnostic Test Probe: J-35616-64B (L-BU)

B135 Coolant Heater Temperature Sensor

Pin	Size	Colour	Circuit	Function	Option
1	0.5	L-GN	36	Coolant Temperature Signal	-

2	0.5	BK/BN	6102	Low Reference	-

© Copyright Chevrolet. All rights reserved

B150 Fuel Tank Pressure Sensor

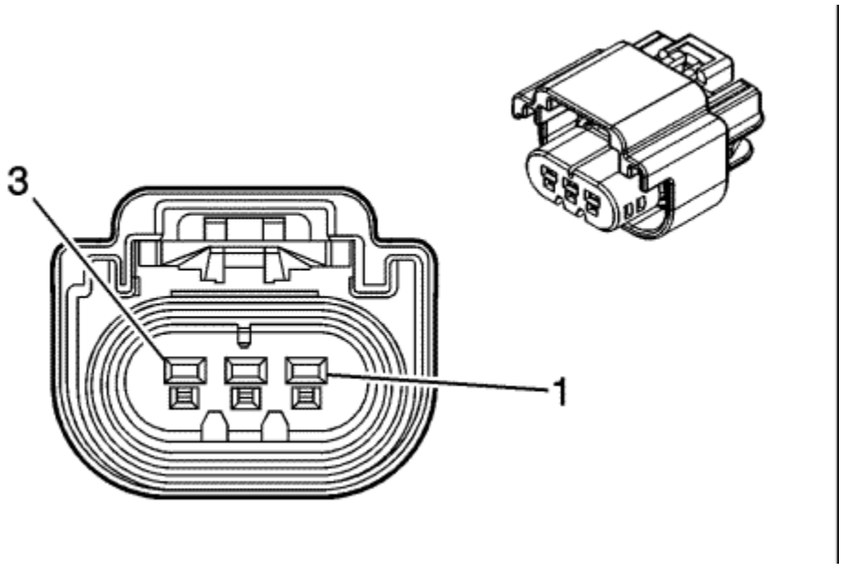

Connector Part Information

Harness Type: EVAP
OEM Connector: 13522407
Service Connector: 19179274
Description: 3-Way F GT 150 Series, Sealed (BK)

Terminal Part Information

Terminated Lead:
Release Tool: J-38125-553
Diagnostic Test Probe: J-35616-2A (GY)

B150 Fuel Tank Pressure Sensor

Pin	Size	Colour	Circuit	Function	Option
1	0.5	L-BU/WH	890	Fuel Tank Pressure Sensor Signal	-
2	0.5	BK/L-GN	6281	Low Reference	--
3	0.5	YE/RD	2709	5 Volt Reference	-

© Copyright Chevrolet. All rights reserved

B160 Windscreen Temperature and Inside Moisture Sensor

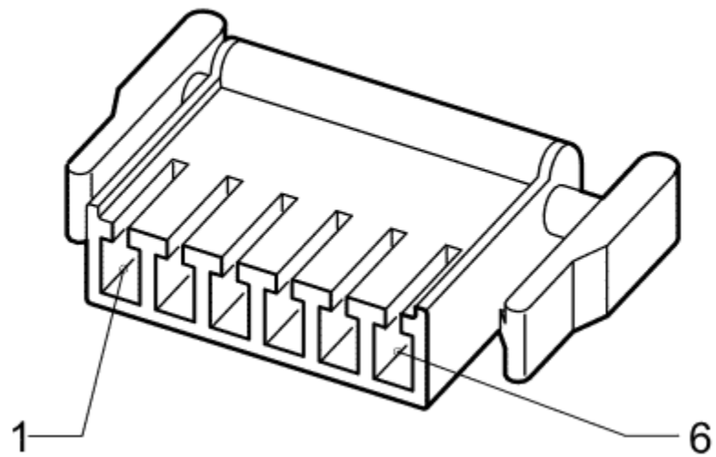

Connector Part Information

Harness Type: Headliner
OEM Connector: 13726957
Service Connector: 13576539
Description: 6-Way F 0.64 Micro Quadlok Series (BK)

Terminal Part Information

Terminated Lead: Service by Connector Assembly - 13576539
Release Tool: J-38125-12A
Diagnostic Test Probe: J-35616-64B (L-BU)

B160 Windscreen Temperature and Inside Moisture Sensor

Pin	Size	Colour	Circuit	Function	Option
1	0.5	YE/RD	597	5 Volt Reference	-

2	0.5	GY/L-BU	7564	Humidity Sensor Signal	--
3	0.5	BK/BN	6102	Low Reference	-
4	0.5	GY/L-GN	7565	Windscreen Temp Sensor Signal	-
5	0.5	YE/L-BU	3197	Humidity Temperature Sensor Signal	—
6	--	--	--	Not Used	--

© Copyright Chevrolet. All rights reserved

Left Front of Vehicle Components

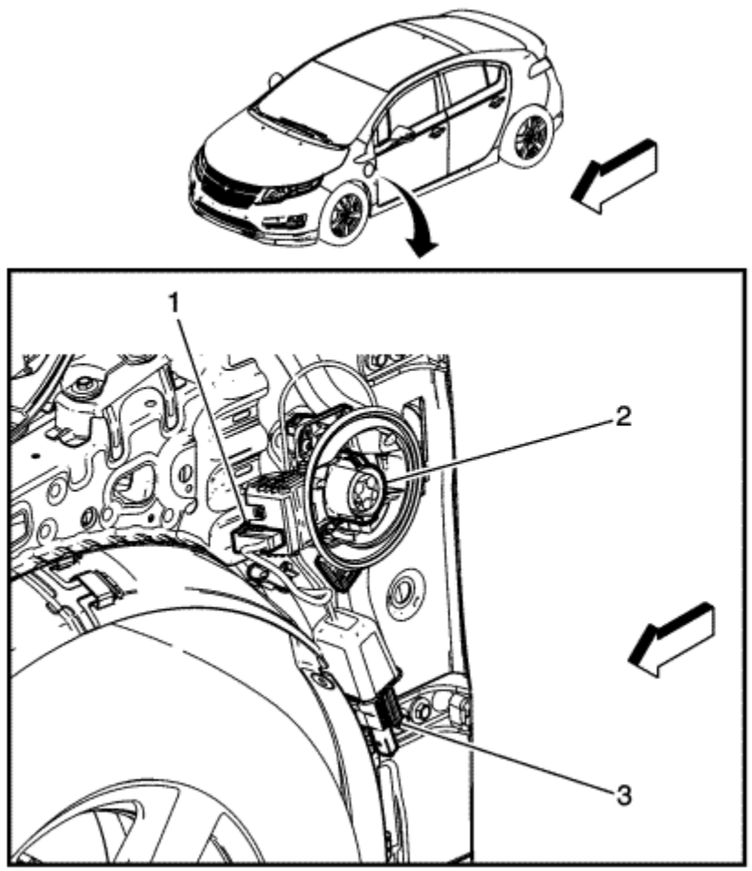

(1) B197 Charge Port Door Position Switch
(2) X98 Hybrid Battery Charger Receptacle
(3) M80 Charge Port Door Actuator

© Copyright Chevrolet. All rights reserved

B197 Charge Port Door Ajar Switch

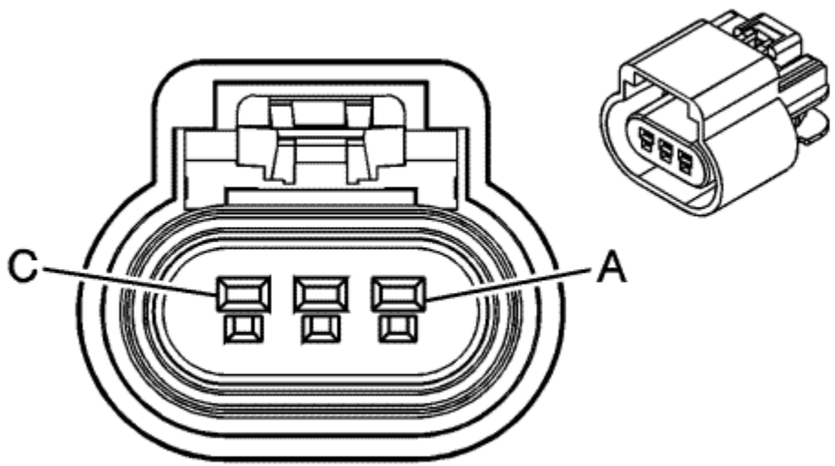

Connector Part Information

Harness Type: Forward Lamp
OEM Connector: 13519047
Service Connector: 15306388
Description: 3-Way F GT 150 Series, Sealed (BK)

Terminal Part Information

Terminated Lead: Service by Connector Assembly - Pending
Release Tool: J-38125-553
Diagnostic Test Probe: J-35616-2A (GY)

B197 Charge Port Door Ajar Switch

Pin	Size	Colour	Circuit	Function	Option
A	0.5	WH/L-BU	3697	Charge Port Door Sensor Signal	-
B	--	--	--	Not Used	--
C	0.5	BK	1950	Ground	-

© Copyright Chevrolet. All rights reserved

B201 Brake Control Brake Pedal Position Sensor

Connector Part Information

Harness Type: Instrument Panel
OEM Connector: 1-967616-1
Service Connector: 15306420
Description: 6-Way F MQS Socket Housing, Sealed (BK)

Terminal Part Information

Terminated Lead: Service by Connector Assembly - 15306420
Release Tool: J-38125-12A
Diagnostic Test Probe: J-35616-64B (L-BU)

B201 Brake Control Brake Pedal Position Sensor

Pin	Size	Colour	Circuit	Function	Option
1	0.35	BK/GY	718	Low Reference	-
2-3	--	--	--	Not Used	--
4	0.35	L-BU/YE	3334	Brake Pedal Travel Sensor 1 Signal	-
5	0.35	L-BU/RD	3335	Brake Pedal Travel Sensor 1 High Reference	--
6	0.35	VT/BN	3333	Brake Pedal Travel Sensor 2 Signal	-

© Copyright Chevrolet. All rights reserved

B202 Hybrid Electronics Coolant Temperature Sensor

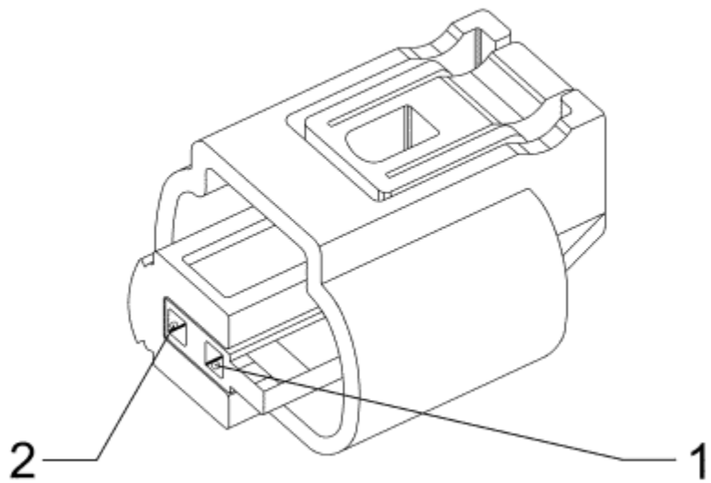

Connector Part Information

Harness Type: Cooling Fan
OEM Connector: 1-967644-1
Service Connector: 13576533
Description: 2-Way F 0.64 MQS Series, Sealed (BK)

Terminal Part Information

Terminated Lead: 13576395
Release Tool: J-38125-12A
Diagnostic Test Probe: J-35616-64B (L-BU)

B202 Hybrid Electronics Coolant Temperature Sensor

Pin	Size	Colour	Circuit	Function	Option
1	0.5	L-GN/VT	2032	Coolant Temperature Sensor Signal	-

2	0.5	BK/YE	407	Low Reference	-

© Copyright Chevrolet. All rights reserved

B203 Engine Coolant Radiator Temperature Sensor

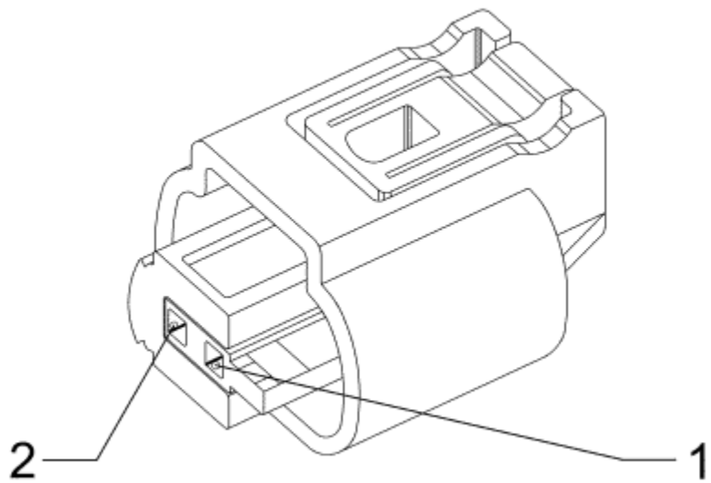

Connector Part Information

Harness Type: Cooling Fan
OEM Connector: 1-967644-1
Service Connector: 13576533
Description: 2-Way F 0.64 MQS Series, Sealed (BK)

Terminal Part Information

Terminated Lead: 13576395
Release Tool: J-38125-12A
Diagnostic Test Probe: J-35616-64B (L-BU)

B203 Engine Coolant Radiator Temperature Sensor

Pin	Size	Colour	Circuit	Function	Option
1	0.5	BK/L-BU	6813	Low Reference	-

2	0.5	YE/BK	3000	Coolant Temperature Sensor #2 Signal	-

© Copyright Chevrolet. All rights reserved

Underbody - Hybrid/EV Battery Pack Assembly Components

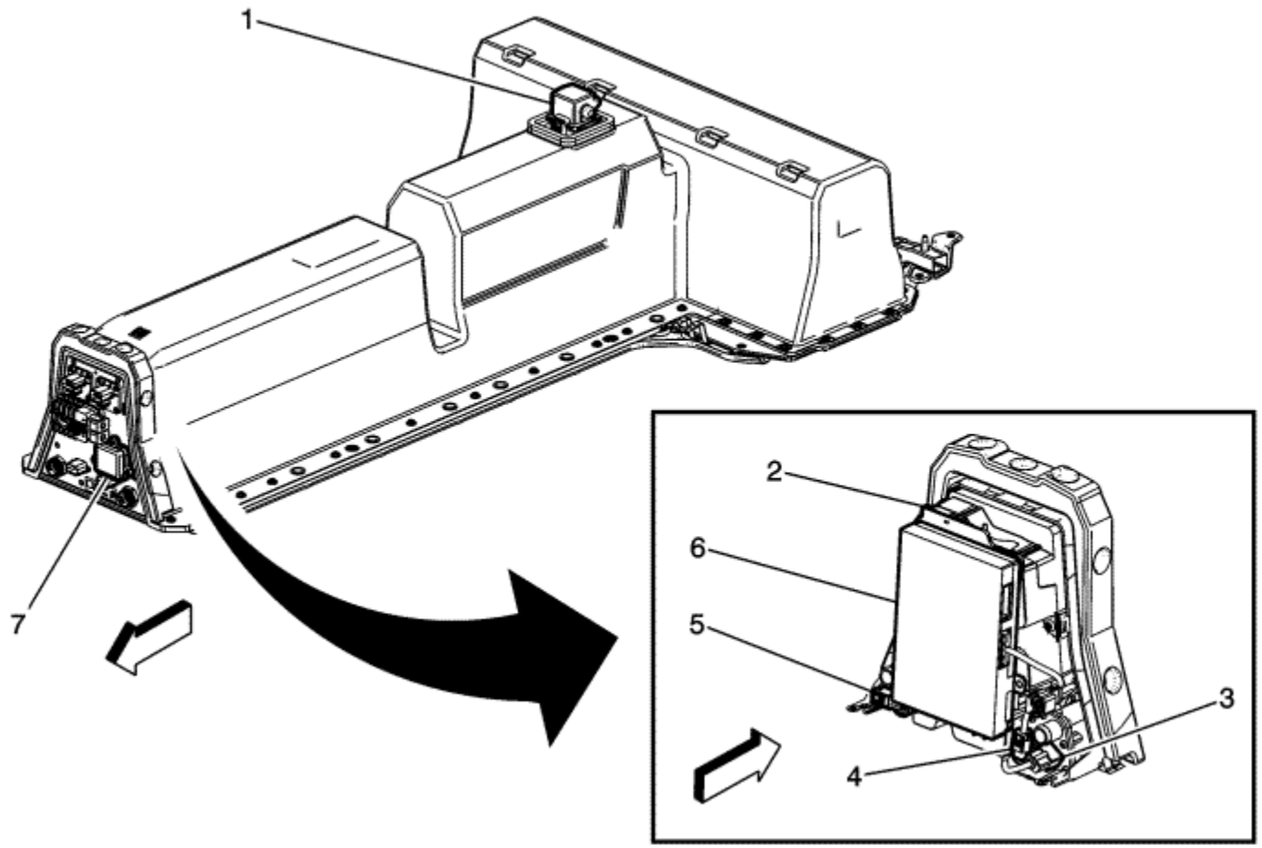

(1) S15 Hybrid/EV Battery Pack High-Voltage Manual Disconnect Lever
(2) A28 Hybrid/EV Battery Contactor Assembly
(3) E54 Hybrid/EV Battery Pack Coolant Heater
(4) B204A Hybrid/EV Battery Pack Coolant Temperature Sensor 1
(5) B204B Hybrid/EV Battery Pack Coolant Temperature Sensor 2
(6) K16 Battery Energy Control Module

(7) F115 Hybrid/EV Battery Pack Fuse Cover

© Copyright Chevrolet. All rights reserved

B204A Hybrid/EV Battery Pack Coolant Temperature Sensor 1

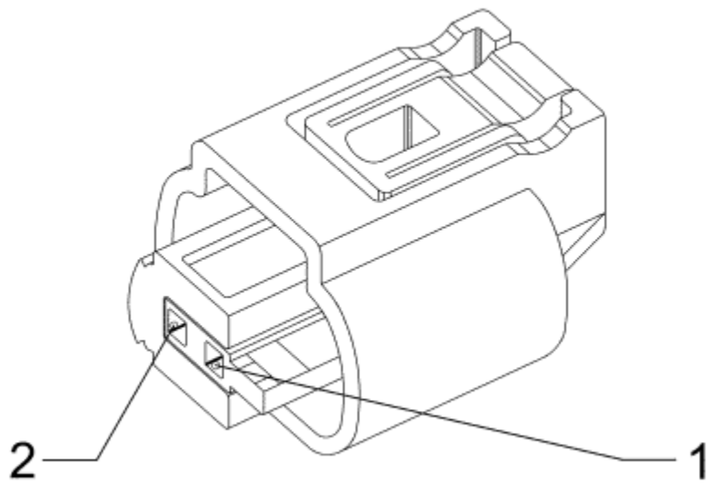

Connector Part Information

Harness Type: Contactor Assembly
OEM Connector: 1-967644-1
Service Connector: 13576533
Description: 2-Way F 0.64 MQS Series, Sealed (BK)

Terminal Part Information

Terminated Lead: Service by Connector Assembly - 13576533
Release Tool: J-38125-12A
Diagnostic Test Probe: J-35616-64B (L-BU)

B204A Hybrid/EV Battery Pack Coolant Temperature Sensor 1

Pin	Size	Colour	Circuit	Function	Option
1	0.5	OG	-	Low Reference	-

2	0.5	YE	-	Hybrid/EV Battery Pack Inlet Coolant Temperature Sensor Signal	-

© Copyright Chevrolet. All rights reserved

B204B Hybrid/EV Battery Pack Coolant Temperature Sensor 2

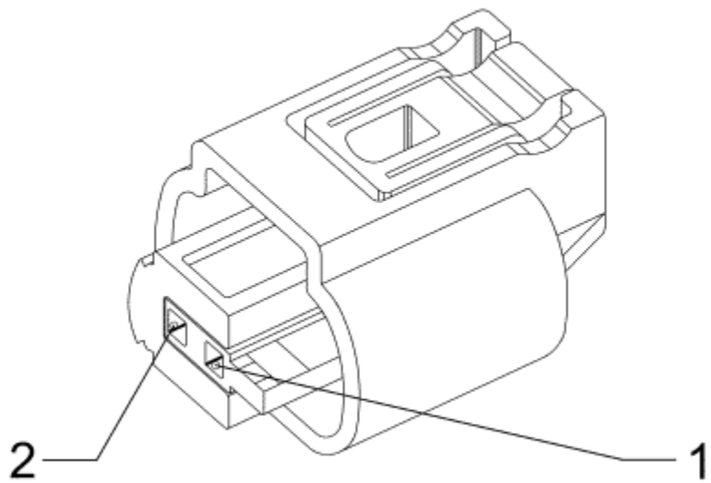

Connector Part Information

Harness Type: Contactor Assembly
OEM Connector: 1-967644-1
Service Connector: 13576533
Description: 2-Way F 0.64 MQS Series, Sealed (BK)

Terminal Part Information

Terminated Lead: Service by Connector Assembly - 13576533
Release Tool: J-38125-12A
Diagnostic Test Probe: J-35616-64B (L-BU)

B204B Hybrid/EV Battery Pack Coolant Temperature Sensor 2

Pin	Size	Colour	Circuit	Function	Option
1	0.5	L-BU	-	Low Reference	-

2	0.5	VT	-	Hybrid/EV Battery Pack Outlet Coolant Temperature Sensor Signal	-

© Copyright Chevrolet. All rights reserved

B207A Drive Motor 1 Temperature Sensor

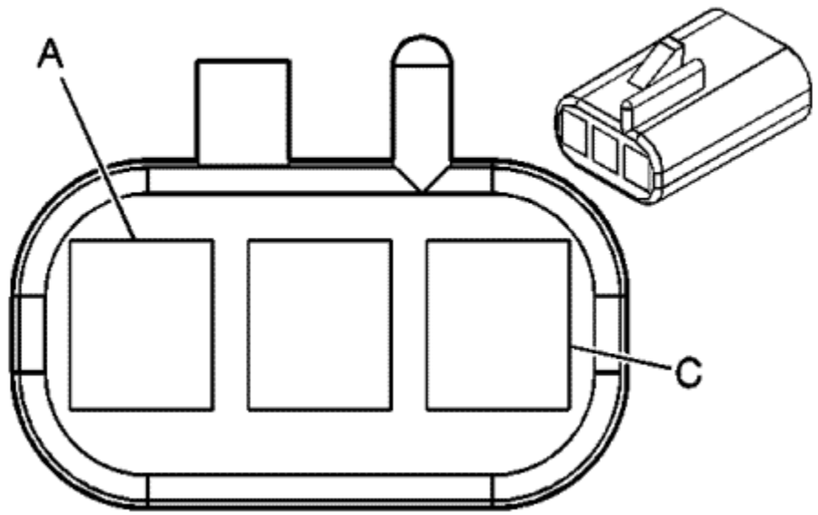

Connector Part Information

Harness Type: Transmission
OEM Connector: 12065422
Service Connector: 12101864
Description: 3-Way F Metri-Pack 150 Series (NA)

Terminal Part Information

Terminated Lead: 13575464
Release Tool: J-38125-12A
Diagnostic Test Probe: J-35616-14 (GN)

B207A Drive Motor 1 Temperature Sensor

Pin	Size	Colour	Circuit	Function	Option
A	0.5	YE	919	Drive Motor 1 Temperature Sensor Signal	-
B	0.5	VT	920	Drive Motor 1 Temperature Sensor Return	-
C	--	--	--	Not Used	--

© Copyright Chevrolet. All rights reserved

B207B Drive Motor 2 Temperature Sensor

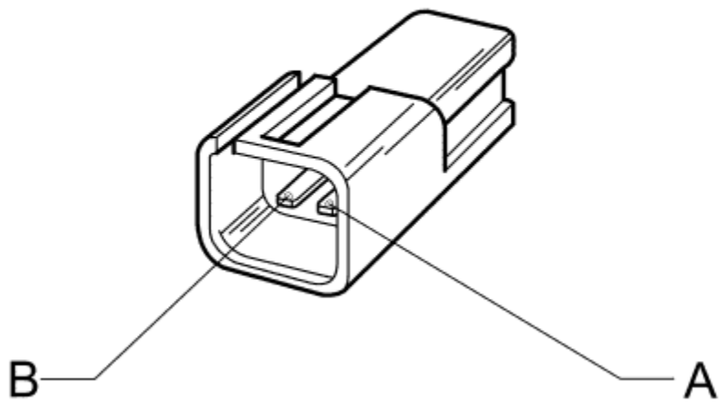

Connector Part Information

Harness Type: Transmission
OEM Connector: 12059250
Service Connector: 12085481
Description: 2-Way M Metri-Pack 150 Series (NA)

Terminal Part Information

Terminated Lead: 13575462
Release Tool: J-38125-12A
Diagnostic Test Probe: J-35616-3 (GY)

B207B Drive Motor 2 Temperature Sensor

Pin	Size	Colour	Circuit	Function	Option
A	0.5	GY	917	Drive Motor 2 Temperature Sensor Signal	-

B	0.5	L-BU	918	Drive Motor 2 Temperature Sensor Return	-

© Copyright Chevrolet. All rights reserved

B222 A/C Refrigerant Low-Side Temperature Sensor

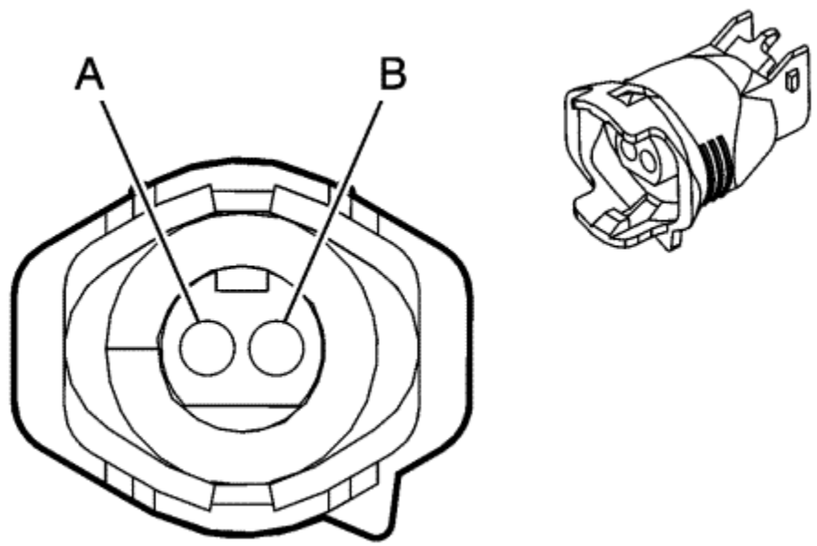

Connector Part Information

Harness Type: Engine
OEM Connector: 12092512
Service Connector: 15305943
Description: 2-Way F Micro-Pack 064 Series, Sealed (BK)

Terminal Part Information

Terminated Lead: Service by Connector Assembly - 15305943
Release Tool: J-38125-559
Diagnostic Test Probe: J-35616-64B (L-BU)

B222 A/C Refrigerant Low-Side Temperature Sensor

Pin	Size	Colour	Circuit	Function	Option
A	0.5	WH/L-BU	732	A/C Refrigerant High Temperature Sensor Signal	-
B	0.5	BK/VT	452	Low Reference	-

© Copyright Chevrolet. All rights reserved

Underbody - Hybrid/EV Battery Pack Internals

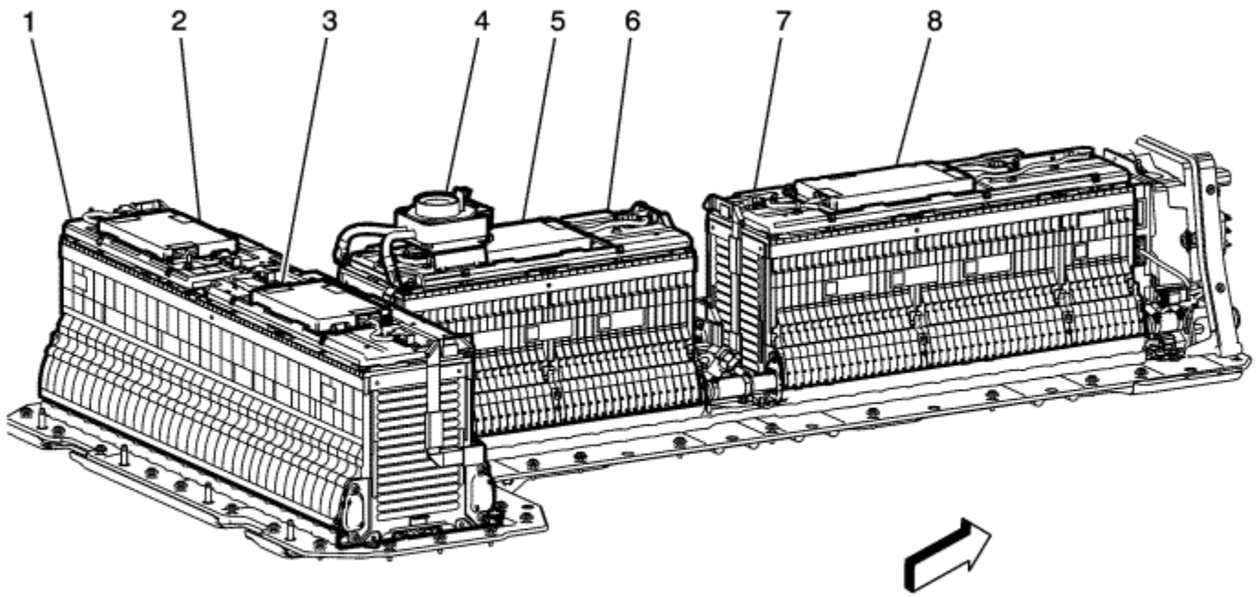

(1) C4C Hybrid/EV Battery Pack Section 3
(2) K112D Hybrid/EV Battery Interface Control Module 4
(3) K112C Hybrid/EV Battery Interface Control Module 3
(4) S15 Hybrid/EV Battery Pack High-Voltage Manual Disconnect Lever
(5) K112B Hybrid/EV Battery Interface Control Module 2
(6) C4B Hybrid/EV Battery Pack Section 2

(7) C4A Hybrid/EV Battery Pack Section 1
(8) K112A Hybrid/EV Battery Interface Control Module 1

© Copyright Chevrolet. All rights reserved

C4A Hybrid/EV Battery Pack Cell Section 1 X1

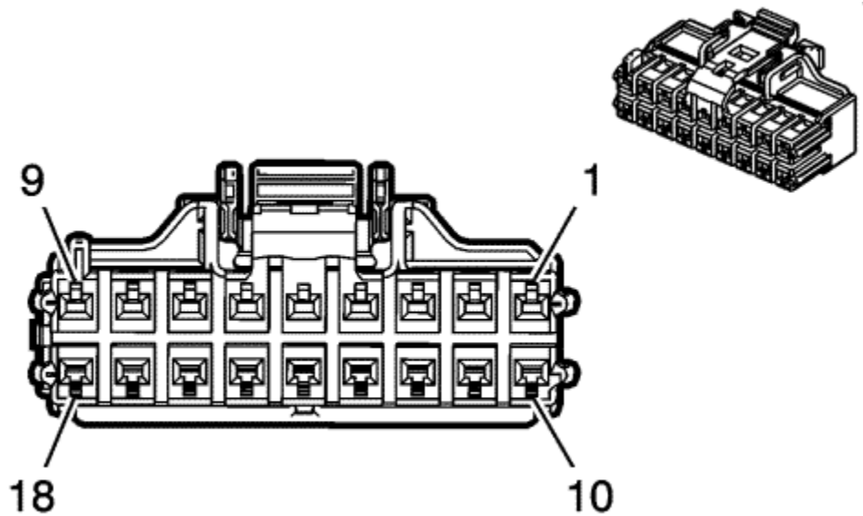

Connector Part Information

Harness Type: Hybrid Battery
OEM Connector: 10021053-1-0000A
Service Connector: Service by Harness - See Part Catalog
Description: 18-Way F (OG)

Terminal Part Information

Terminated Lead: Service by Harness - See Part Catalog
Release Tool: Service by Harness - See Part Catalog
Diagnostic Test Probe: Service by Harness - See Part Catalog

C4A Hybrid/EV Battery Pack Cell Section 1 X1

Pin	Size	Colour	Circuit	Function	Option
1	--	--	--	Not Used	--
2	0.35	BN	5571	Battery Voltage Signal (12)	--
3	0.35	YE	5573	Battery Voltage Signal (14)	-

4	0.35	BN/WH	5575	Battery Voltage Signal (16)	-
5-7	--	--	--	Not Used	--
8	0.35	L-GN/VT	5577	Battery Voltage Signal (18)	-
9	0.35	L-GN/GY	5407	Battery Module Temperature Signal (16)	-
10	--	--	--	Not Used	--
11	0.35	YE/GY	5572	Battery Voltage Signal (13)	-
12	0.35	WH/BK	5574	Battery Voltage Signal (15)	-
13-16	--	--	--	Not Used	--
17	0.35	WH/L-BU	5576	Battery Voltage Signal (17)	--
18	0.35	BK/L-GN	3775	Low Reference	-

© Copyright Chevrolet. All rights reserved

C4A Hybrid/EV Battery Pack Cell Section 1 X2

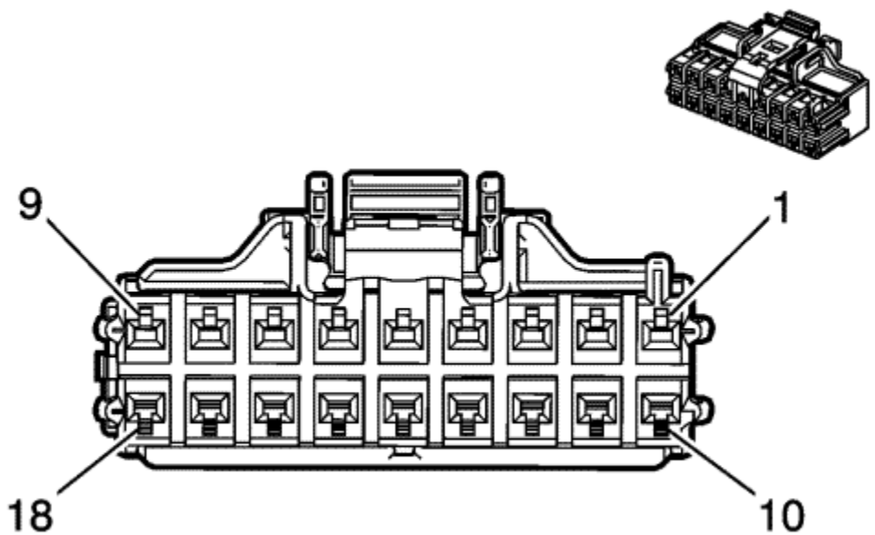

Connector Part Information

Harness Type: Hybrid Battery
OEM Connector: 10021061-1-0000A
Service Connector: Service by Harness - See Part Catalog
Description: 18-Way F (OG)

Terminal Part Information

Terminated Lead: Service by Harness - See Part Catalog
Release Tool: Service by Harness - See Part Catalog
Diagnostic Test Probe: Service by Harness - See Part Catalog

C4A Hybrid/EV Battery Pack Cell Section 1 X2

Pin	Size	Colour	Circuit	Function	Option
1	0.35	BN	5405	Battery Module Temperature Signal (14)	--
2	0.35	BK/VT	5403	Low Reference	--
3	0.35	YE/BN	5394	Battery Voltage Signal (2)	-

4	0.35	GY/YE	5396	Battery Voltage Signal (4)	-
5	0.35	L-GN	5398	Battery Voltage Signal (6)	--
6	0.35	L-BU	5400	Battery Voltage Signal (8)	--
7	0.35	L-BU/GY	5392	Battery Voltage Signal (10)	--
8	0.35	BN	5571	Battery Voltage Signal (12)	-
9	0.35	BN/WH	5406	Battery Module Temperature Signal (15)	--
10	0.35	BK/BN	3773	Low Reference	--
11	0.35	VT	5391	Battery Voltage Signal (1)	-
12	0.35	WH	5395	Battery Voltage Signal (3)	--
13	0.35	YE/L-GN	5397	Battery Voltage Signal (5)	-
14	--	--	--	Not Used	--
15	0.35	YE/BN	5399	Battery Voltage Signal (7)	--
16	0.35	L-GN/BK	5401	Battery Voltage Signal (9)	-
17	0.35	L-GN/GY	5393	Battery Voltage Signal (11)	--
18	0.35	BK/L-BU	3774	Low Reference	-

© Copyright Chevrolet. All rights reserved

C4A Hybrid/EV Battery Pack Cell Section 1 X3

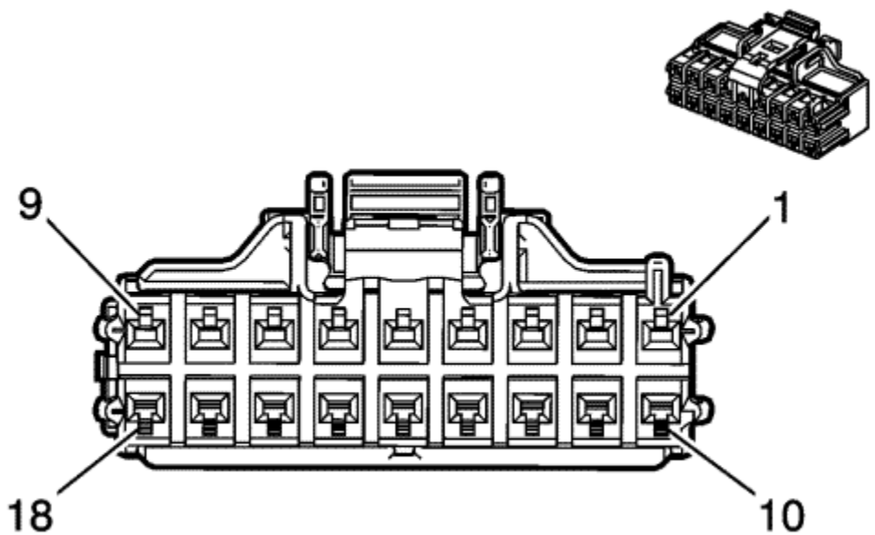

Connector Part Information

Harness Type: Hybrid Battery
OEM Connector: 10021061-1-0000A
Service Connector: Service by Harness - See Part Catalog
Description: 18-Way F (OG)

Terminal Part Information

Terminated Lead: Service by Harness - See Part Catalog
Release Tool: Service by Harness - See Part Catalog
Diagnostic Test Probe: Service by Harness - See Part Catalog

C4A Hybrid/EV Battery Pack Cell Section 1 X3

Pin	Size	Colour	Circuit	Function	Option
1	0.35	BN	5405	Battery Module Temperature Signal (12)	--
2	0.35	BK/VT	5403	Low Reference	--
3	0.35	YE/BN	5394	Battery Voltage Signal (2)	-

4	0.35	GY/YE	5396	Battery Voltage Signal (4)	-
5	0.35	L-GN	5398	Battery Voltage Signal (6)	--
6	0.35	L-BU	5400	Battery Voltage Signal (8)	--
7	0.35	L-BU/GY	5392	Battery Voltage Signal (10)	--
8	0.35	BN	5571	Battery Voltage Signal (12)	-
9	0.35	BN/WH	5406	Battery Module Temperature Signal (13)	--
10	0.35	BK/BN	3773	Low Reference	--
11	0.35	VT	5391	Battery Voltage Signal (1)	-
12	0.35	WH	5395	Battery Voltage Signal (3)	--
13	0.35	YE/L-GN	5397	Battery Voltage Signal (5)	-
14	--	--	--	Not Used	--
15	0.35	YE/BN	5399	Battery Voltage Signal (7)	--
16	0.35	L-GN/BK	5401	Battery Voltage Signal (9)	-
17	0.35	L-GN/GY	5393	Battery Voltage Signal (11)	--
18	0.35	BK/L-BU	3774	Low Reference	-

© Copyright Chevrolet. All rights reserved

C4B Hybrid/EV Battery Pack Cell Section 2 X1

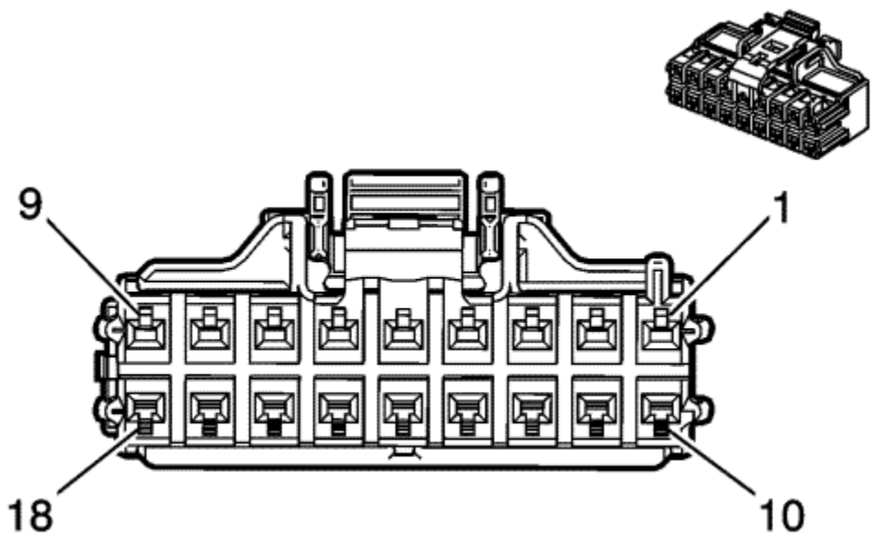

Connector Part Information

Harness Type: Hybrid Battery
OEM Connector: 10021061-1-0000A
Service Connector: Service by Harness - See Part Catalog
Description: 18-Way F (OG)

Terminal Part Information

Terminated Lead: Service by Harness - See Part Catalog
Release Tool: Service by Harness - See Part Catalog
Diagnostic Test Probe: Service by Harness - See Part Catalog

C4B Hybrid/EV Battery Pack Cell Section 2 X1

Pin	Size	Colour	Circuit	Function	Option
1	0.35	BN	5405	Battery Module Temperature Signal (10)	--
2	0.35	BK/VT	5403	Low Reference	--
3	0.35	YE/BN	5394	Battery Voltage Signal (2)	-

4	0.35	GY/YE	5396	Battery Voltage Signal (4)	-
5	0.35	L-GN	5398	Battery Voltage Signal (6)	--
6	0.35	L-BU	5400	Battery Voltage Signal (8)	--
7	0.35	L-BU/GY	5392	Battery Voltage Signal (10)	--
8	0.35	BN	5571	Battery Voltage Signal (12)	-
9	0.35	BN/WH	5406	Battery Module Temperature Signal (11)	--
10	0.35	BKBN	3773	Low Reference	--
11	0.35	VT	5391	Battery Voltage Signal (1)	-
12	0.35	WH	5395	Battery Voltage Signal (3)	--
13	0.35	YE/L-GN	5397	Battery Voltage Signal (5)	-
14	--	--	--	Not Used	--
15	0.35	YE/BN	5399	Battery Voltage Signal (7)	--
16	0.35	L-GN/BK	5401	Battery Voltage Signal (9)	-
17	0.35	L-GN/GY	5393	Battery Voltage Signal (11)	--
18	0.35	BK/L-BU	3774	Low Reference	-

© Copyright Chevrolet. All rights reserved

C4B Hybrid/EV Battery Pack Cell Section 2 X2

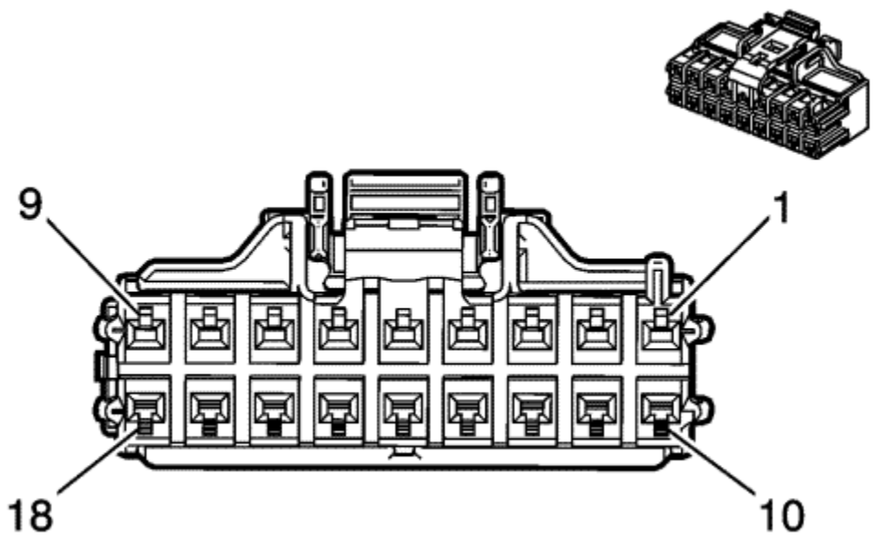

Connector Part Information

Harness Type: Hybrid Battery
OEM Connector: 10021061-1-0000A
Service Connector: Service by Harness - See Part Catalog
Description: 18-Way F (OG)

Terminal Part Information

Terminated Lead: Service by Harness - See Part Catalog
Release Tool: Service by Harness - See Part Catalog
Diagnostic Test Probe: Service by Harness - See Part Catalog

C4B Hybrid/EV Battery Pack Cell Section 2 X2

Pin	Size	Colour	Circuit	Function	Option
1	0.35	BN	5405	Battery Module Temperature Signal (8)	--
2	0.35	BK/VT	5403	Low Reference	--
3	0.35	YE/BN	5394	Battery Voltage Signal (2)	-

4	0.35	GY/YE	5396	Battery Voltage Signal (4)	-
5	0.35	L-GN	5398	Battery Voltage Signal (6)	--
6	0.35	L-BU	5400	Battery Voltage Signal (8)	--
7	0.35	L-BU/GY	5392	Battery Voltage Signal (10)	--
8	0.35	BN	5571	Battery Voltage Signal (12)	-
9	0.35	BN/WH	5406	Battery Module Temperature Signal (9)	--
10	0.35	BK/BN	3773	Low Reference	--
11	0.35	VT	5391	Battery Voltage Signal (1)	-
12	0.35	WH	5395	Battery Voltage Signal (3)	--
13	0.35	YE/L-GN	5397	Battery Voltage Signal (5)	-
14	--	--	--	Not Used	--
15	0.35	YE/BN	5399	Battery Voltage Signal (7)	--
16	0.35	L-GN/BK	5401	Battery Voltage Signal (9)	-
17	0.35	L-GN/GY	5393	Battery Voltage Signal (11)	--
18	0.35	BK/L-BU	3774	Low Reference	-

© Copyright Chevrolet. All rights reserved

C4C Hybrid/EV Battery Pack Cell Section 3 X1

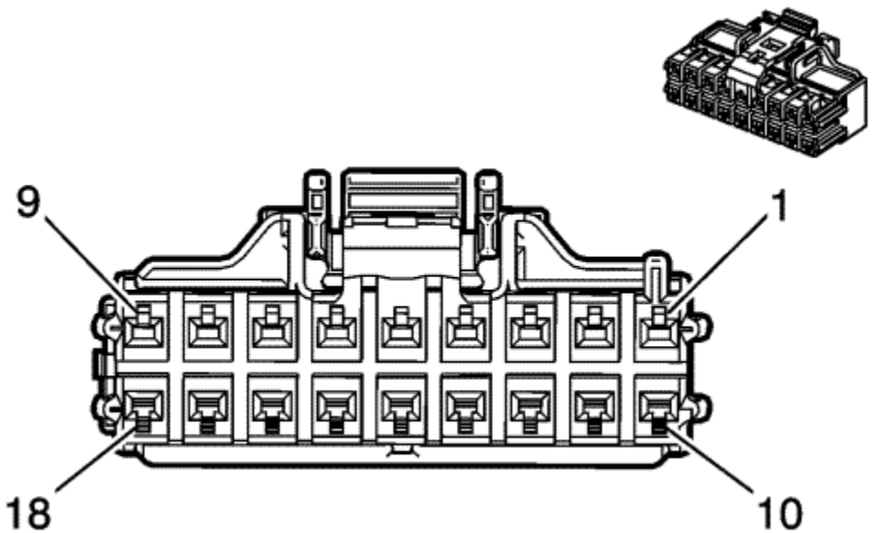

Connector Part Information

Harness Type: Hybrid Battery
OEM Connector: 10021061-1-0000A
Service Connector: Service by Harness - See Part Catalog
Description: 18-Way F (OG)

Terminal Part Information

Terminated Lead: Service by Harness - See Part Catalog
Release Tool: Service by Harness - See Part Catalog
Diagnostic Test Probe: Service by Harness - See Part Catalog

C4C Hybrid/EV Battery Pack Cell Section 3 X1

Pin	Size	Colour	Circuit	Function	Option
1	0.35	BN	5405	Battery Module Temperature Signal (6)	--
2	0.35	BK/VT	5403	Low Reference	--
3	0.35	YE/BN	5394	Battery Voltage Signal (2)	-

4	0.35	GY/YE	5396	Battery Voltage Signal (4)	-
5	0.35	L-GN	5398	Battery Voltage Signal (6)	--
6	0.35	L-BU	5400	Battery Voltage Signal (8)	--
7	0.35	L-BU/GY	5392	Battery Voltage Signal (10)	--
8	0.35	BN	5571	Battery Voltage Signal (12)	-
9	0.35	BN/WH	5406	Battery Module Temperature Signal (7)	--
10	0.35	BK/BN	3773	Low Reference	--
11	0.35	VT	5391	Battery Voltage Signal (1)	-
12	0.35	WH	5395	Battery Voltage Signal (3)	--
13	0.35	YE/L-GN	5397	Battery Voltage Signal (5)	-
14	--	--	--	Not Used	--
15	0.35	YE/BN	5399	Battery Voltage Signal (7)	--
16	0.35	L-GN/BK	5401	Battery Voltage Signal (9)	-
17	0.35	L-GN/GY	5393	Battery Voltage Signal (11)	--
18	0.35	BK/L-BU	3774	Low Reference	-

© Copyright Chevrolet. All rights reserved

C4C Hybrid/EV Battery Pack Cell Section 3 X3

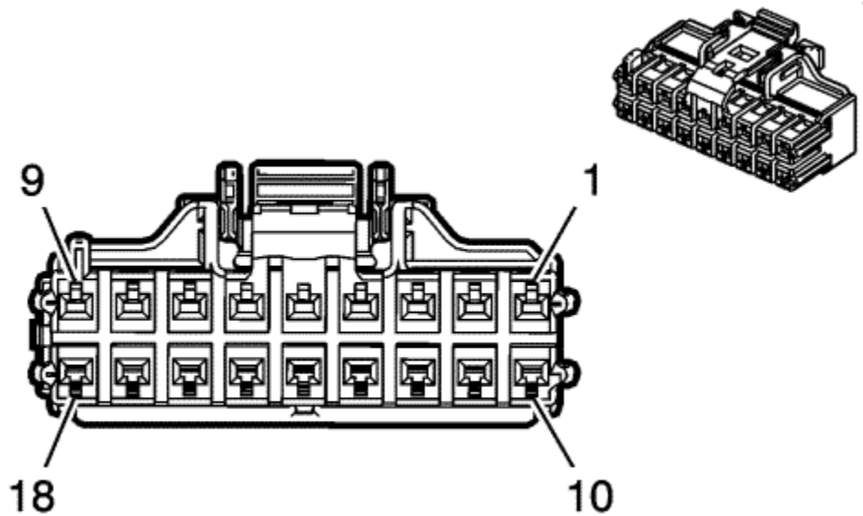

Connector Part Information

Harness Type: Hybrid Battery
OEM Connector: 10021053-1-0000A
Service Connector: Service by Harness - See Part Catalog
Description: 18-Way F (OG)

Terminal Part Information

Terminated Lead: Service by Harness - See Part Catalog
Release Tool: Service by Harness - See Part Catalog
Diagnostic Test Probe: Service by Harness - See Part Catalog

C4C Hybrid/EV Battery Pack Cell Section 3 X3

Pin	Size	Colour	Circuit	Function	Option
1	--	--	--	Not Used	--
2	0.35	BN	5571	Battery Voltage Signal (12)	--
3	0.35	YE	5573	Battery Voltage Signal (14)	-

4	0.35	BN/WH	5575	Battery Voltage Signal (16)	-
5-7	--	--	--	Not Used	--
8	0.35	L-GN/VT	5577	Battery Voltage Signal (18)	-
9	0.35	L-GN/GY	5407	Battery Module Temperature Signal (3)	-
10	--	--	--	Not Used	--
11	0.35	YE/GY	5572	Battery Voltage Signal (13)	-
12	0.35	WH/BK	5574	Battery Voltage Signal (15)	-
13-16	--	--	--	Not Used	--
17	0.35	WH/L-BU	5576	Battery Voltage Signal (17)	--
18	0.35	BK/L-GN	3775	Low Reference	-

© Copyright Chevrolet. All rights reserved

C4C Hybrid/EV Battery Pack Cell Section 3 X4

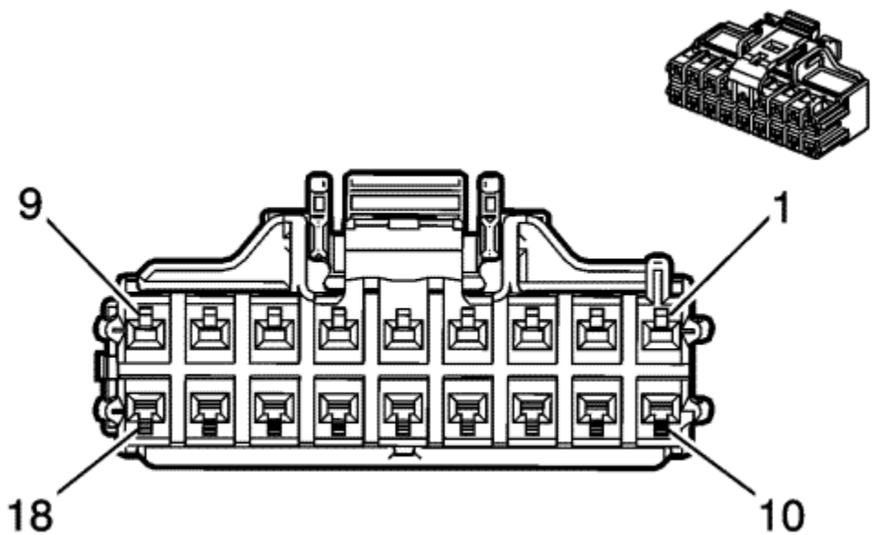

Connector Part Information

Harness Type: Hybrid Battery
OEM Connector: 10021061-1-0000A
Service Connector: Service by Harness - See Part Catalog
Description: 18-Way F (OG)

Terminal Part Information

Terminated Lead: Service by Harness - See Part Catalog
Release Tool: Service by Harness - See Part Catalog
Diagnostic Test Probe: Service by Harness - See Part Catalog

C4C Hybrid/EV Battery Pack Cell Section 3 X4

Pin	Size	Colour	Circuit	Function	Option
1	0.35	BN	5405	Battery Module Temperature Signal (1)	--
2	0.35	BK/VT	5403	Low Reference	--
3	0.35	YE/BN	5394	Battery Voltage Signal (2)	-

4	0.35	GY/YE	5396	Battery Voltage Signal (4)	-
5	0.35	L-GN	5398	Battery Voltage Signal (6)	--
6	0.35	L-BU	5400	Battery Voltage Signal (8)	--
7	0.35	L-BU/GY	5392	Battery Voltage Signal (10)	--
8	0.35	BN	5571	Battery Voltage Signal (12)	-
9	0.35	BN/WH	5406	Battery Module Temperature Signal (2)	--
10	0.35	BK/BN	3773	Low Reference	--
11	0.35	VT	5391	Battery Voltage Signal (1)	-
12	0.35	WH	5395	Battery Voltage Signal (3)	--
13	0.35	YE/L-GN	5397	Battery Voltage Signal (5)	-
14	--	--	--	Not Used	--
15	0.35	YE/BN	5399	Battery Voltage Signal (7)	--
16	0.35	L-GN/BK	5401	Battery Voltage Signal (9)	-
17	0.35	L-GN/GY	5393	Battery Voltage Signal (11)	--
18	0.35	BK/L-BU	3774	Low Reference	-

© Copyright Chevrolet. All rights reserved

C4C Hybrid Battery Pack Cell Section 3 X2

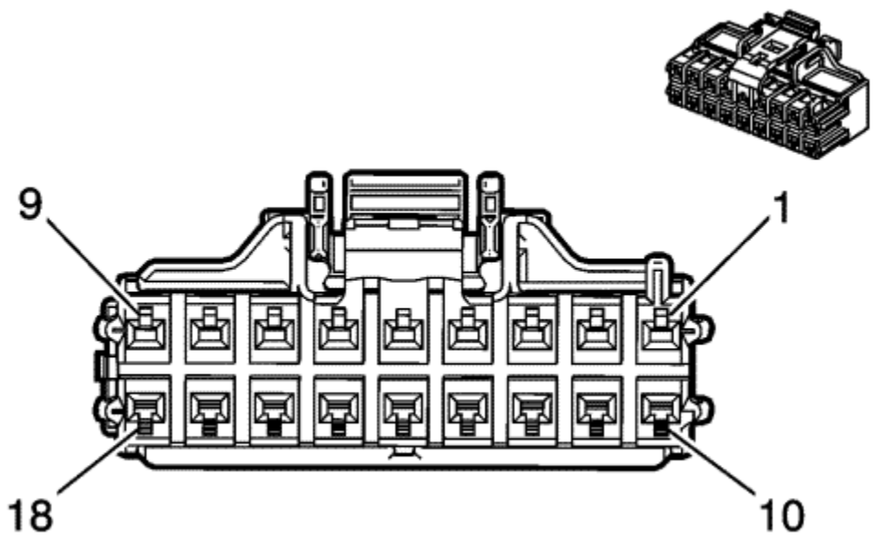

Connector Part Information

Harness Type: Hybrid Battery
OEM Connector: 10021061-1-0000A
Service Connector: Service by Harness - See Part Catalog
Description: 18-Way F (OG)

Terminal Part Information

Terminated Lead: Service by Harness - See Part Catalog
Release Tool: Service by Harness - See Part Catalog
Diagnostic Test Probe: Service by Harness - See Part Catalog

C4C Hybrid Battery Pack Cell Section 3 X2

Pin	Size	Colour	Circuit	Function	Option
1	0.35	BN	5405	Battery Module Temperature Signal (4)	--
2	0.35	BK/VT	5403	Low Reference	--
3	0.35	YE/BN	5394	Battery Voltage Signal (2)	-

4	0.35	GY/YE	5396	Battery Voltage Signal (4)	-
5	0.35	L-GN	5398	Battery Voltage Signal (6)	--
6	0.35	L-BU	5400	Battery Voltage Signal (8)	--
7	0.35	L-BU/GY	5392	Battery Voltage Signal (10)	--
8	0.35	BN	5571	Battery Voltage Signal (12)	-
9	0.35	BN/WH	5406	Battery Module Temperature Signal (5)	--
10	0.35	BK/BN	3773	Low Reference	--
11	0.35	VT	5391	Battery Voltage Signal (1)	-
12	0.35	WH	5395	Battery Voltage Signal (3)	--
13	0.35	YE/L-GN	5397	Battery Voltage Signal (5)	-
14	--	--	--	Not Used	--
15	0.35	YE/BN	5399	Battery Voltage Signal (7)	--
16	0.35	L-GN/BK	5401	Battery Voltage Signal (9)	-
17	0.35	L-GN/GY	5393	Battery Voltage Signal (11)	--
18	0.35	BK/L-BU	3774	Low Reference	-

© Copyright Chevrolet. All rights reserved

E4N Park/Indicator Lamp - Left

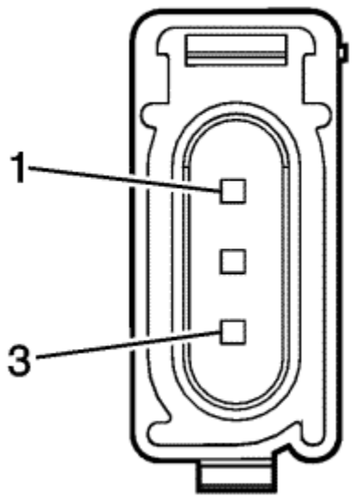

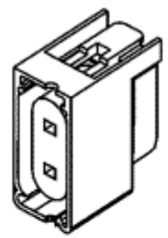

Connector Part Information

Harness Type: Front Fascia
OEM Connector: ZFJ-00703-UA
Service Connector: Service by Harness - See Part Catalog
Description: 3-Way F Axial 3-Wire Connector Assembly (BN)

Terminal Part Information

Terminated Lead: 13576389
Release Tool: J-38125-11A
Diagnostic Test Probe: J-35616-2A (GY)

E4N Park/Indicator Lamp - Left

Pin	Size	Colour	Circuit	Function	Option
1	0.5	BK	1150	Ground	-
2	0.5	WH/YE	1204	Left Park Lamp Supply Voltage	--
3	0.5	L-BU/WH	1314	Left Front Indicator Lamp Supply Voltage	-

© Copyright Chevrolet. All rights reserved

E4P Park/Indicator Lamp - Right

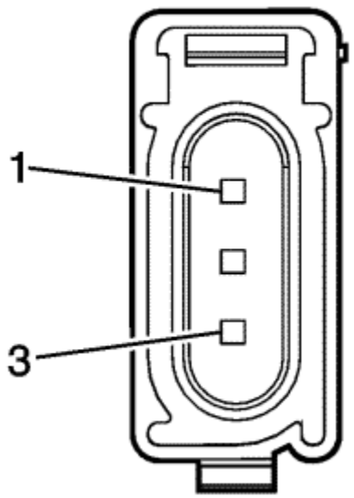

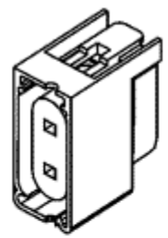

Connector Part Information

Harness Type: Front Fascia
OEM Connector: ZFJ-00703-UA
Service Connector: Service by Harness - See Part Catalog
Description: 3-Way F Axial 3-Wire Connector Assembly (BN)

Terminal Part Information

Terminated Lead: 13576389
Release Tool: J-38125-11A
Diagnostic Test Probe: J-35616-2A (GY)

E4P Park/Indicator Lamp - Right

Pin	Size	Colour	Circuit	Function	Option
1	0.5	BK	1150	Ground	-
2	0.5	VT	1203	Right Park Lamp Supply Voltage	--
3	0.5	L-GN/VT	1315	Right Front Indicator Lamp Supply Voltage	-

© Copyright Chevrolet. All rights reserved

E4Y Indicator Repeater Lamp - Left

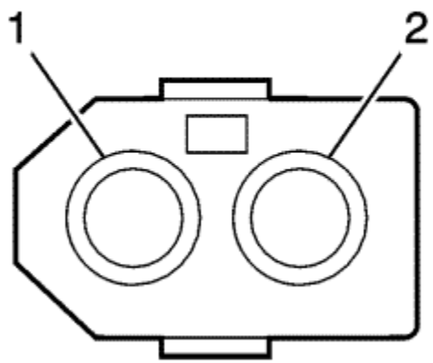

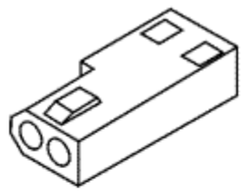

Connector Part Information

Harness Type: Outside Rear-view Mirror
OEM Connector: Not Available
Service Connector: Service by Assembly - See Parts catalogue
Description: 2-Way F (BK)

Terminal Part Information

Terminated Lead: Not Available
Release Tool: Service by Assembly - See Parts catalogue
Diagnostic Test Probe: Not Available

E4Y Indicator Repeater Lamp - Left

Pin	Size	Colour	Circuit	Function	Option
1	0.35	BN	1314	Left Front Indicator Lamp Supply Voltage	--
2	0.35	BK/BN	1550	Ground	-

© Copyright Chevrolet. All rights reserved

E4Z Indicator Repeater Lamp - Right

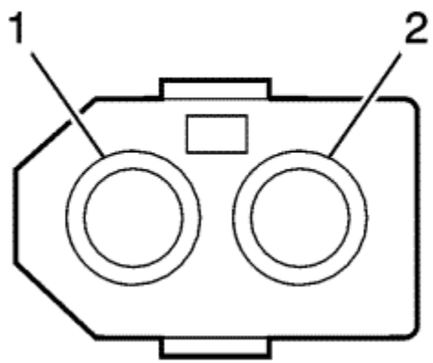

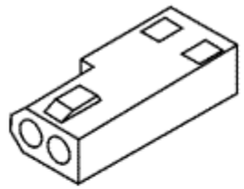

Connector Part Information

Harness Type: Outside Rear-view Mirror
OEM Connector: Not Available
Service Connector: Service by Assembly - See Parts catalogue
Description: 2-Way F (BK)

Terminal Part Information

Terminated Lead: Not Available
Release Tool: Service by Assembly - See Parts catalogue
Diagnostic Test Probe: Not Available

E4Z Indicator Repeater Lamp - Right

Pin	Size	Colour	Circuit	Function	Option
1	0.35	BN	1315	Right Front Indicator Lamp Supply Voltage	--
2	0.35	BK/BN	2050	Ground	-

© Copyright Chevrolet. All rights reserved

E5 Reversing Light

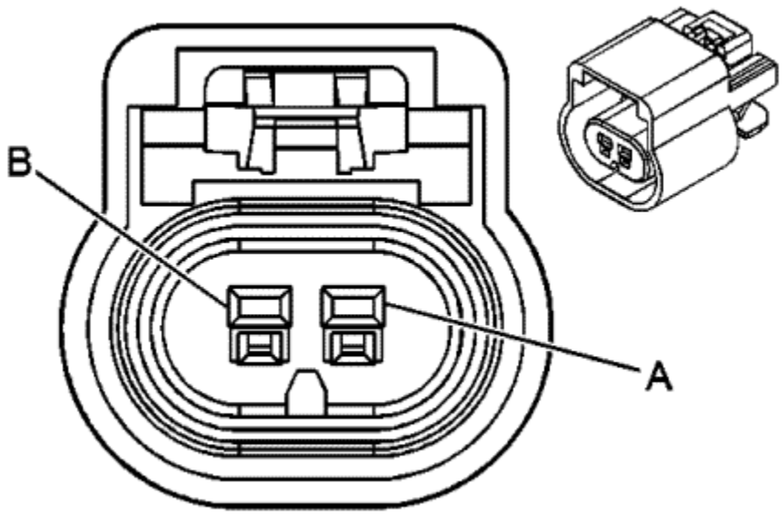

Connector Part Information

Harness Type: Rear Fascia
OEM Connector: 13510085
Service Connector: 19179278
Description: 2-Way F GT 150 Series, Sealed (BK)

Terminal Part Information

Terminated Lead: 13575413
Release Tool: J-38125-553
Diagnostic Test Probe: J-35616-2A (GY)

E5 Reversing Light

Pin	Size	Colour	Circuit	Function	Option
A	0.5	L-GN/WH	1324	Reverse Lamp Supply Voltage	-
B	0.5	BK	650	Ground	-

© Copyright Chevrolet. All rights reserved

E6 Centre High Mounted Brake Lamp

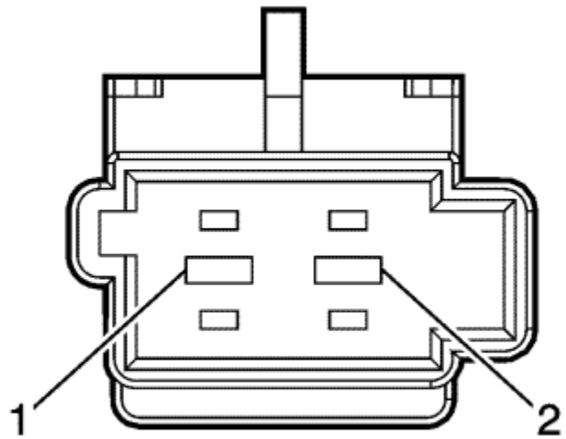

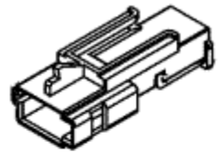

Connector Part Information

Harness Type: Liftgate
OEM Connector: 1563190-1
Service Connector: 13574780
Description: 2-Way M 1.6 Timer Series (BK)

Terminal Part Information

Terminated Lead: 13575593
Release Tool: J-38125-560
Diagnostic Test Probe: J-35616-14 (GN)

E6 Centre High Mounted Brake Lamp

Pin	Size	Colour	Circuit	Function	Option
1	0.5	BN/YE	820	CHMSL Supply Voltage	-
2	0.5	BK	650	Ground	-

© Copyright Chevrolet. All rights reserved

E7L Number Plate Lamp - Left

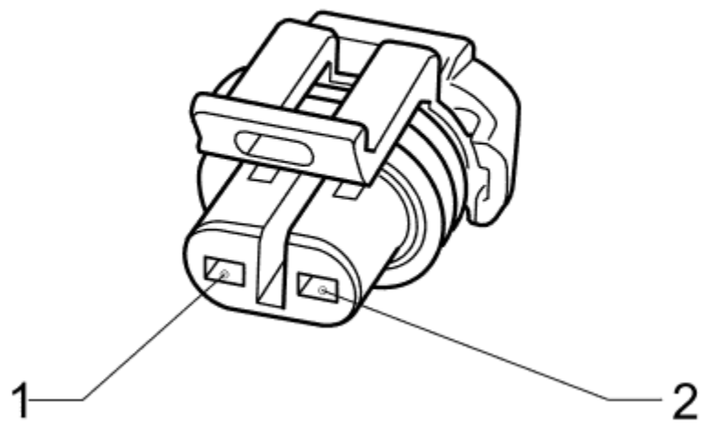

Connector Part Information

Harness Type: Rear Fascia
OEM Connector: 15344089
Service Connector: Service by Harness - See Part Catalog
Description: 2-Way F (WH)

Terminal Part Information

Terminated Lead: 13575413
Release Tool: J-38125-553
Diagnostic Test Probe: J-35616-2A (GY)

E7L Number Plate Lamp - Left

Pin	Size	Colour	Circuit	Function	Option
1	0.5	L-GN/YE	6846	Rear Number Plate Lamp Supply Voltage	-

2	0.5	BK	650	Ground	-

© Copyright Chevrolet. All rights reserved

E7R Number Plate Lamp - Right

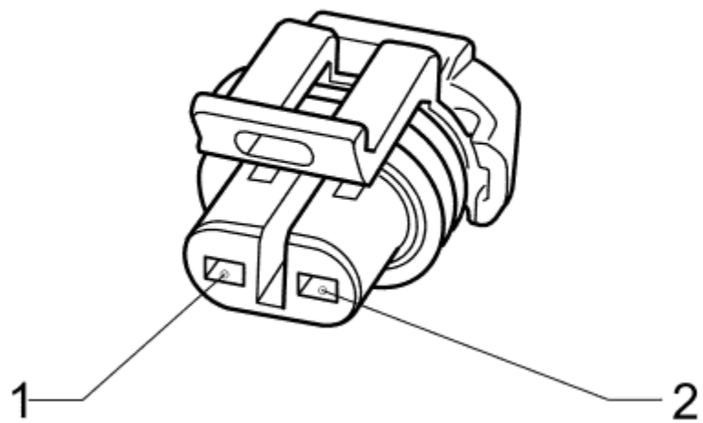

Connector Part Information

Harness Type: Rear Fascia
OEM Connector: 15344089
Service Connector: Service by Harness - See Part Catalog
Description: 2-Way F (WH)

Terminal Part Information

Terminated Lead: 13575413
Release Tool: J-38125-553
Diagnostic Test Probe: J-35616-2A (GY)

E7R Number Plate Lamp - Right

Pin	Size	Colour	Circuit	Function	Option
1	0.5	L-GN/YE	6846	Rear Number Plate Lamp Supply Voltage	-

2	0.5	BK	650	Ground	-

© Copyright Chevrolet. All rights reserved

E14A Seat Heating Element - Driver Back

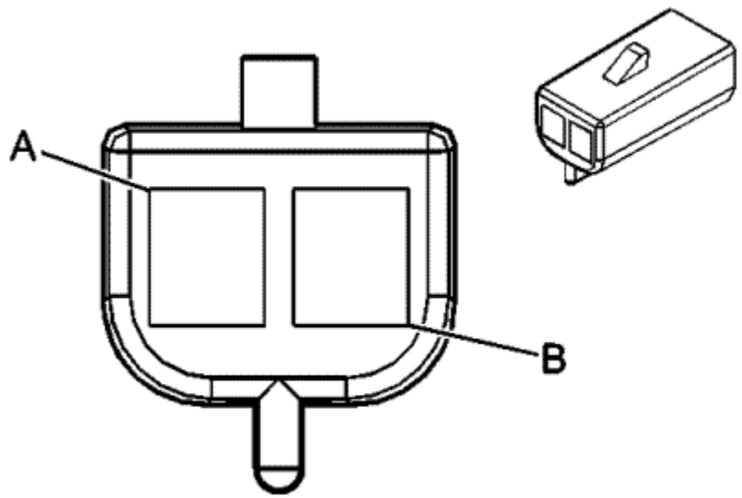

Connector Part Information

Harness Type: Driver Seat
OEM Connector: 12059253
Service Connector: 12125690
Description: 2-Way F Metri-Pack 150 Series (L-GN)

Terminal Part Information

Terminated Lead: Service by Harness - See Part Catalog
Release Tool: J-38125-12A
Diagnostic Test Probe: J-35616-14 (GN)

E14A Seat Heating Element - Driver Back

Pin	Size	Colour	Circuit	Function	Option
A	0.8	L-GN	2078	Driver Heated Seat Element Return	-
B	0.8	VT	2424	Driver Heated Back Element Return	-

© Copyright Chevrolet. All rights reserved

E14B Seat Heating Element - Driver Cushion

Connector Part Information

Harness Type: Driver Seat
OEM Connector: 12047785
Service Connector: 12102900
Description: 4-Way F Metri-Pack 150 Series (BK)

Terminal Part Information

Pins: A, B
Terminated Lead: Service by Harness - See Part Catalog
Release Tool: J-38125-12A
Diagnostic Test Probe: J-35616-14 (GN)
Pins: C, D
Terminated Lead: 13575464
Release Tool: J-38125-12A
Diagnostic Test Probe: J-35616-14 (GN)

E14B Seat Heating Element - Driver Cushion

Pin	Size	Colour	Circuit	Function	Option
A	0.8	PK	2077	Driver Heated Seat Element Supply Voltage	-
B	0.8	L-GN	2078	Driver Heated Seat Element Return	-
C	0.5	YE/BK	2079	Heated Seat NTC Signal	-
D	0.5	YE	2080	Driver Heated Seat NTC Low Reference	-

© Copyright Chevrolet. All rights reserved

E14C Seat Heating Element - Passenger Back

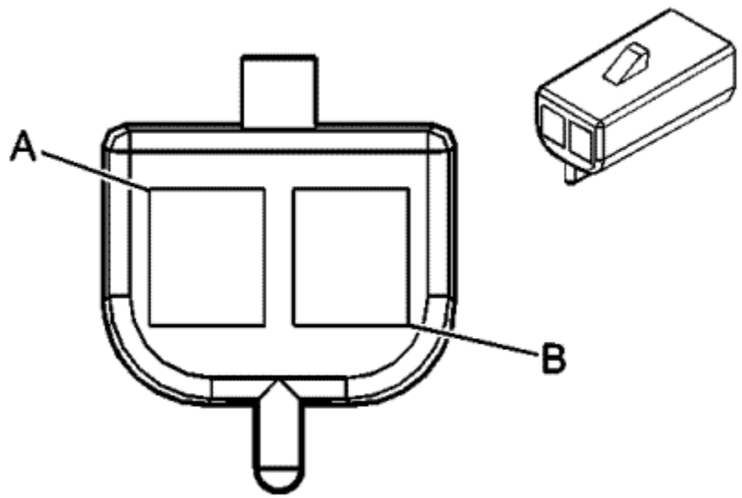

Connector Part Information

Harness Type: Passenger Seat
OEM Connector: 12059253
Service Connector: 12125690
Description: 2-Way F Metri-Pack 150 Series (L-GN)

Terminal Part Information

Terminated Lead: Service by Harness - See Part Catalog
Release Tool: J-38125-12A
Diagnostic Test Probe: J-35616-14 (GN)

E14C Seat Heating Element - Passenger Back

Pin	Size	Colour	Circuit	Function	Option
A	0.8	L-GN	2078	Passenger Heated Seat Element Return	-
B	0.8	VT	2424	Passenger Heated Back Element Return	-

© Copyright Chevrolet. All rights reserved

E14D Seat Heating Element - Passenger Cushion

Connector Part Information

Harness Type: Passenger Seat
OEM Connector: 12047785
Service Connector: 12102900
Description: 4-Way F Metri-Pack 150 Series (BK)

Terminal Part Information

Pins: A, B
Terminated Lead: Service by Harness - See Part Catalog
Release Tool: J-38125-12A
Diagnostic Test Probe: J-35616-14 (GN)
Pins: C, D
Terminated Lead: 13575464
Release Tool: J-38125-12A
Diagnostic Test Probe: J-35616-14 (GN)

E14D Seat Heating Element - Passenger Cushion

Pin	Size	Colour	Circuit	Function	Option
A	0.8	D-BU	2479	Passenger Heated Seat Element Supply Voltage	-
B	0.8	D-BU/YE	2480	Passenger Heated Seat Element Return	-
C	0.5	GY	2434	Heated Seat NTC Signal	--
D	0.5	PK	2435	Passenger Heated Seat NTC Low Reference	-

© Copyright Chevrolet. All rights reserved

E18A Rear Demister Grid - Upper X1

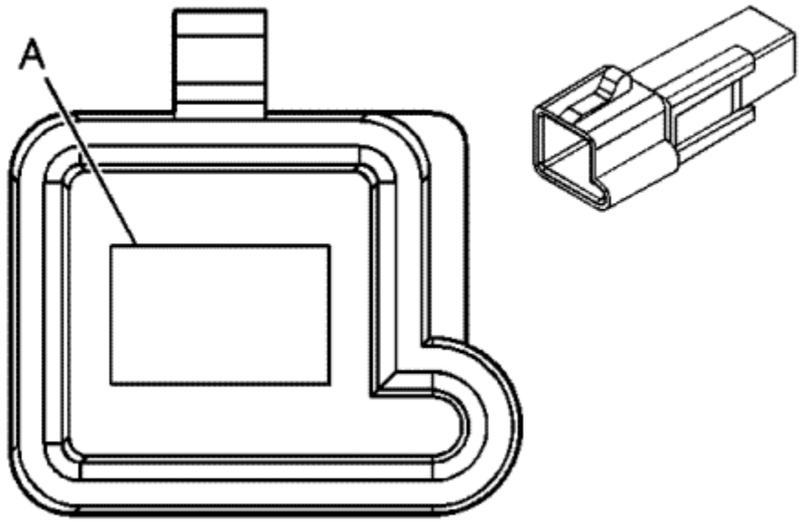

Connector Part Information

Harness Type: Liftgate
OEM Connector: 12059885
Service Connector: 12101893
Description: 1-Way M Metri-Pack 480 Series (BK)

Terminal Part Information

Terminated Lead:
Release Tool: J-38125-11A
Diagnostic Test Probe: J-35616-40 (BU)

E18A Rear Demister Grid - Upper X1

Pin	Size	Colour	Circuit	Function	Option
A	4	BK	293	Rear Defog Element Supply Voltage	-

© Copyright Chevrolet. All rights reserved

E18A Rear Demisting Grid - Upper X2

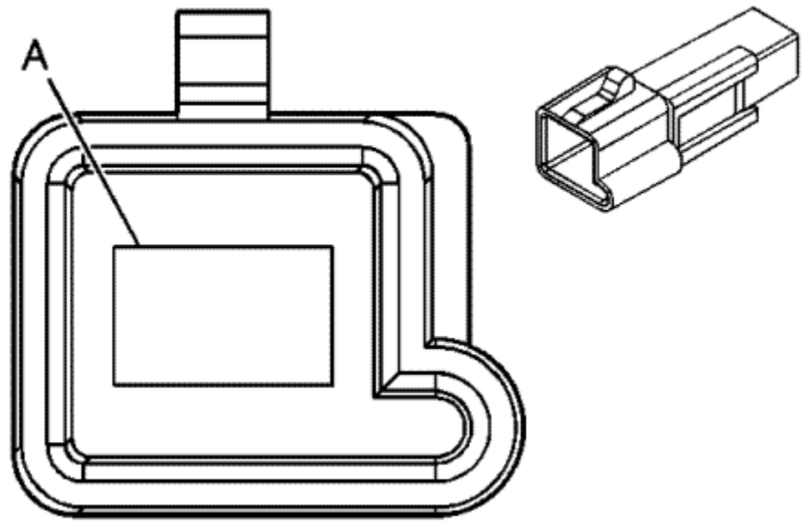

Connector Part Information

Harness Type: Liftgate
OEM Connector: 12059885
Service Connector: 12101893
Description: 1-Way M Metri-Pack 480 Series (BK)

Terminal Part Information

Terminated Lead:
Release Tool: J-38125-11A
Diagnostic Test Probe: J-35616-42 (RD)

E18A Rear Demisting Grid - Upper X2

Pin	Size	Colour	Circuit	Function	Option
A	4	BK	650	Ground	-

© Copyright Chevrolet. All rights reserved

E18B Rear Demisting Grid - Lower X2

Connector Part Information

Harness Type: Liftgate
OEM Connector: 12092133
Service Connector: 12167133
Description: 1-Way F Metri-Pack 630 Series (BK)

Terminal Part Information

Terminated Lead:
Release Tool: J-38125-11A
Diagnostic Test Probe: J-35616-42 (RD)

E18B Rear Demisting Grid - Lower X2

Pin	Size	Colour	Circuit	Function	Option
A	0.75	BK	293	Rear Defog Element Supply Voltage	-

© Copyright Chevrolet. All rights reserved

E31L Sunshade Mirror Lamp - Left

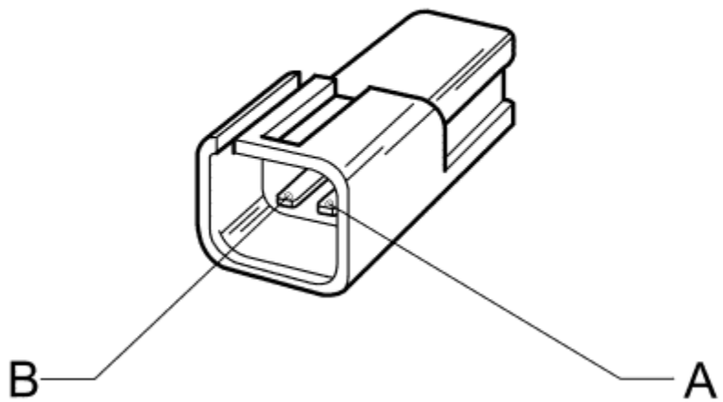

Connector Part Information

Harness Type: Headliner
OEM Connector: 12047663
Service Connector: 12085481
Description: 2-Way M Metri-Pack 150 Series (BK)

Terminal Part Information

Terminated Lead: Service by Connector Assembly - 12085481
Release Tool: J-38125-12A
Diagnostic Test Probe: J-35616-3 (GY)

E31L Sunshade Mirror Lamp - Left

Pin	Size	Colour	Circuit	Function	Option
A	0.5	WH/BN	6815	Inadvertent Power Control	-

B	0.5	BK	2150	Ground	-

© Copyright Chevrolet. All rights reserved

E31R Sunshade Mirror Lamp - Right

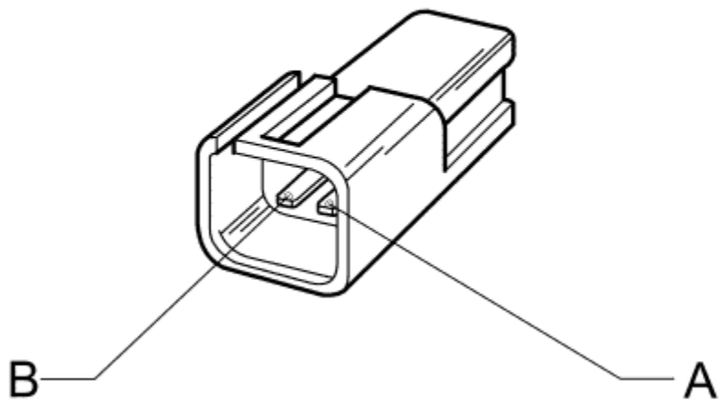

Connector Part Information

Harness Type: Headliner
OEM Connector: 12047663
Service Connector: 12085481
Description: 2-Way M Metri-Pack 150 Series (BK)

Terminal Part Information

Terminated Lead: Service by Connector Assembly - 12085481
Release Tool: J-38125-12A
Diagnostic Test Probe: J-35616-3 (GY)

E31R Sunshade Mirror Lamp - Right

Pin	Size	Colour	Circuit	Function	Option
A	0.5	WH/BN	6815	Inadvertent Power Control	-

B	0.5	BK	2150	Ground	-

© Copyright Chevrolet. All rights reserved

E32 Cigarette Lighter Receptacle

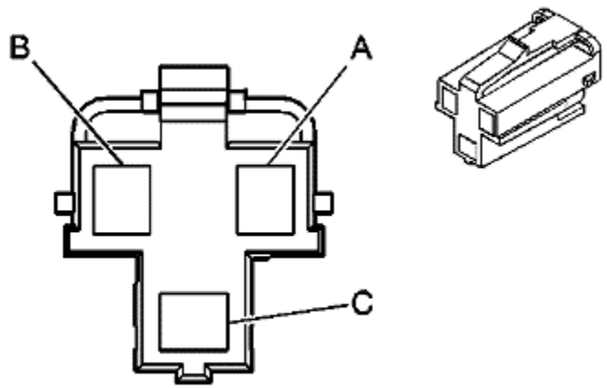

Connector Part Information

Harness Type: Instrument Panel
OEM Connector: 12176836
Service Connector: 19257374
Description: 3-Way F Metri-Pack 280 Series (GY)

Terminal Part Information

Terminated Lead: Service by Connector Assembly - 19257374
Release Tool: J-38125-553
Diagnostic Test Probe: J-35616-4A (PU)

E32 Cigarette Lighter Receptacle

Pin	Size	Colour	Circuit	Function	Option
A	1	VT	1301	Retained Accessory Power Fuse Supply Voltage	-
B	--	--	--	Not Used	--
C	1	BK	2150	Ground	-

© Copyright Chevrolet. All rights reserved

E33 Cargo Lamp

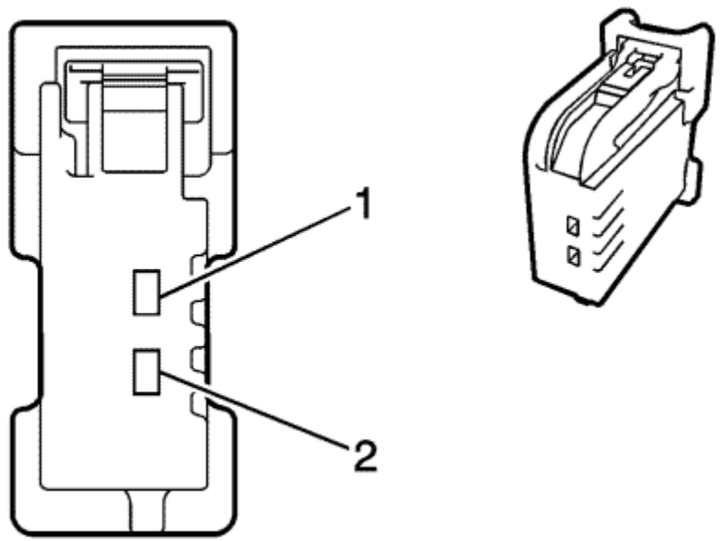

Connector Part Information

Harness Type: Body
OEM Connector: 6098-5510
Service Connector: 19179373
Description: 2-Way F 0.64 Series (BK)

Terminal Part Information

Terminated Lead: Service by Connector Assembly - 19179373
Release Tool: J-38125-553
Diagnostic Test Probe: J-35616-2A (GY)

E33 Cargo Lamp

Pin	Size	Colour	Circuit	Function	Option
1	0.5	L-GN/GY	737	Boot Lamp Control	-
2	0.5	BK	650	Ground	-

© Copyright Chevrolet. All rights reserved

E36AH Interior light

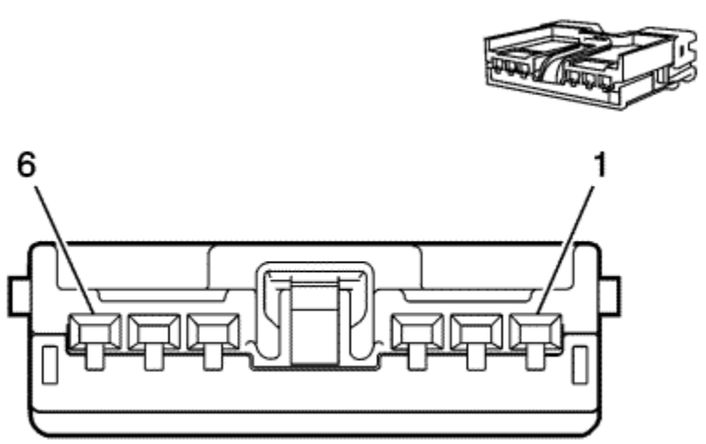

Connector Part Information

Harness Type: Headliner
OEM Connector: 6098-5985
Service Connector: 13576538
Description: 6-Way F 1.5 Series (BK)

Terminal Part Information

Terminated Lead: 13575579
Release Tool: J-38125-553
Diagnostic Test Probe: J-35616-2A (GY)

E36AH Interior light

Pin	Size	Colour	Circuit	Function	Option
1	--	--	--	Not Used	--
2	0.5	GY	157	Interior Lamp Control	--
3-5	--	--	--	Not Used	--
6	0.5	BK	2150	Ground	-

© Copyright Chevrolet. All rights reserved

E37F Dome/Reading Lamps - Front

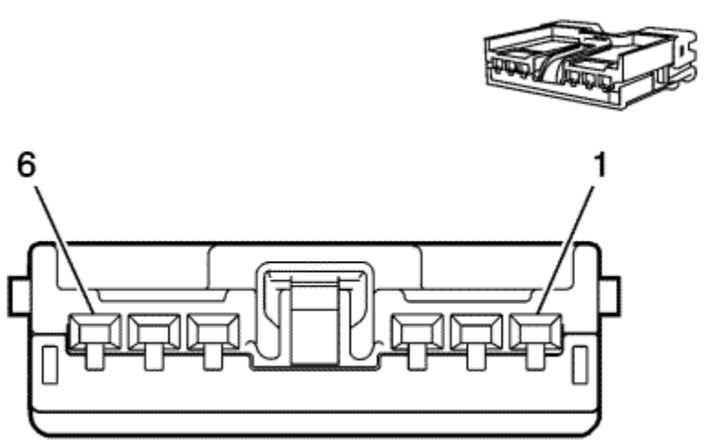

Connector Part Information

Harness Type: Headliner
OEM Connector: 6098-5985
Service Connector: 13576538
Description: 6-Way F 1.5 Series (BK)

Terminal Part Information

Terminated Lead: 13575579
Release Tool: J-38125-553
Diagnostic Test Probe: J-35616-2A (GY)

E37F Dome/Reading Lamps - Front

Pin	Size	Colour	Circuit	Function	Option
1	0.5	WH/BN	6815	Inadvertent Power Control	-
2	0.5	GY	157	Interior Lamp Control	--
3	0.5	YE	6817	LED Backlight Dimming Control	-
4	0.5	GY/L-GN	328	Interior Lamp Defeat Switch Signal	--
5	0.5	GY	156	Courtesy Lamp Switch Signal	--
6	0.5	BK	2150	Ground	-

© Copyright Chevrolet. All rights reserved

E41 Engine Coolant Thermostat Heater

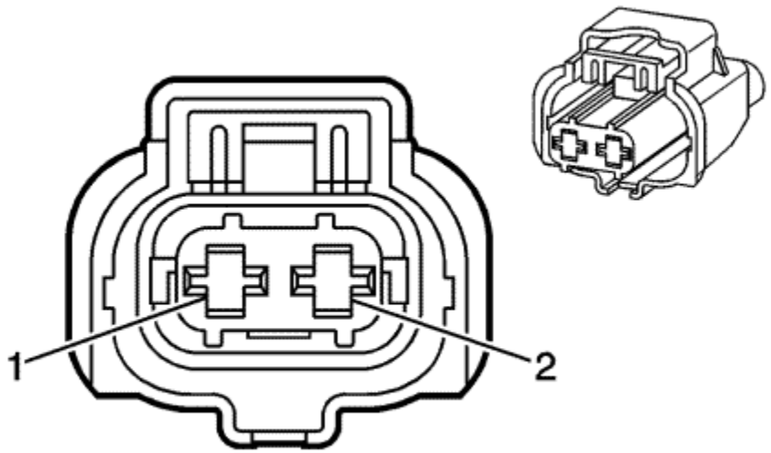

Connector Part Information

Harness Type: Engine
OEM Connector: PPI0001604
Service Connector: 13577526
Description: 2-Way F 2.8 DCS Series, Sealed (BK)

Terminal Part Information

Terminated Lead: Service by Connector Assembly - 13577526
Release Tool: Pending
Diagnostic Test Probe: J-35616-4A (PU)

E41 Engine Coolant Thermostat Heater

Pin	Size	Colour	Circuit	Function	Option
1	0.5	VT/L-BU	5293	Powertrain Main Relay Fused Supply (4)	-
2	0.5	L-BU	6814	Thermostat Engine Cool Control	-

© Copyright Chevrolet. All rights reserved

E42L Tail Lamp Assembly - Left

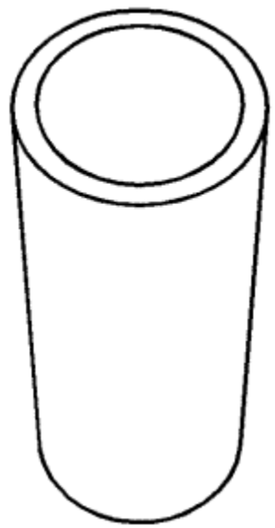

Connector Part Information

Harness Type: Body
OEM Connector: AIT2PB-06-1AK
Service Connector: 19167753
Description: 6-Way F AIT II Series (BK)

Terminal Part Information

Terminated Lead: 13575845
Release Tool: J-38125-215A
Diagnostic Test Probe: J-35616-64B (L-BU)

E42L Tail Lamp Assembly - Left

Pin	Size	Colour	Circuit	Function	Option
1	0.5	YE/BN	618	Left Rear Indicator Lamp Supply Voltage	--
2	0.35	L-BU/GY	809	Left Tail Lamp Supply Voltage	--
3	0.35	WH/VT	6567	Rear Direction Indicator Lamp Feedback Signal	--
4	0.5	BK	650	Ground	-

5-6	--	--	--	Not Used	--

© Copyright Chevrolet. All rights reserved

E42R Tail Lamp Assembly - Right

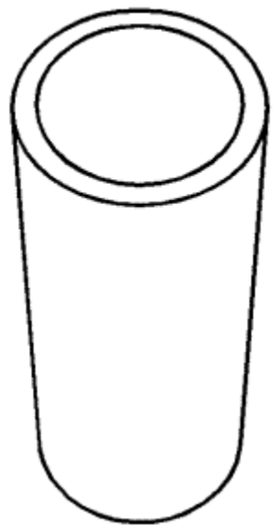

Connector Part Information

Harness Type: Body
OEM Connector: AIT2PB-06-1AK
Service Connector: 19167753
Description: 6-Way F AIT II Series (BK)

Terminal Part Information

Terminated Lead: 13575845
Release Tool: J-38125-215A
Diagnostic Test Probe: J-35616-64B (L-BU)

E42R Tail Lamp Assembly - Right

Pin	Size	Colour	Circuit	Function	Option
1	0.5	L-GN/VT	619	Right Rear Indicator Lamp Supply Voltage	--
2	0.35	WH	609	Right Tail Lamp Supply Voltage	--
3	0.35	WH/BK	7544	Right Rear Direction Indicator Feedback Signal	--
4	0.5	BK	850	Ground	-

5-6	--	--	--	Not Used	--

© Copyright Chevrolet. All rights reserved

F103 Power Inverter Module Assembly Cable Cover

Connector Part Information

Harness Type: Engine
OEM Connector: 12077900
Service Connector: 12116247
Description: 2-Way F Metri-Pack 280 Series, Sealed (BK)

Terminal Part Information

Terminated Lead: Service by Connector Assembly - 12116247
Release Tool: J-38125-11A
Diagnostic Test Probe: J-35616-4A (PU)

F103 Power Inverter Module Assembly Cable Cover

Pin	Size	Colour	Circuit	Function	Option
A	0.5	VT	5087	High-Voltage Interlock Loop Signal (1)	-
B	0.5	VT	5087	High-Voltage Interlock Loop Signal (1)	-

© Copyright Chevrolet. All rights reserved

F105L Roof Rail Air Bag - Left

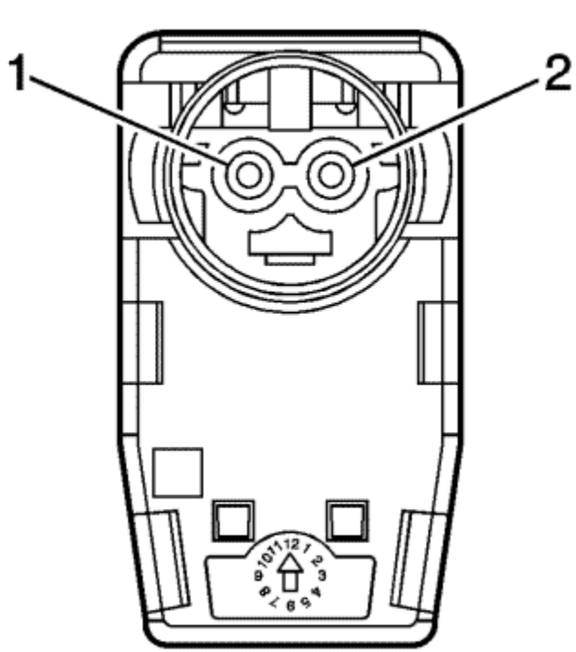

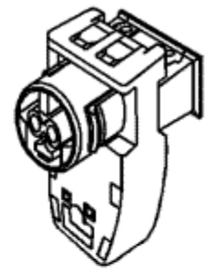

Connector Part Information

Harness Type: Body
OEM Connector: Pending
Service Connector: Pending
Description: 2-Way (YE)

Terminal Part Information

Terminated Lead: Service by Connector Assembly - Pending
Release Tool: Pending
Diagnostic Test Probe: Pending

F105L Roof Rail Air Bag - Left

Pin	Size	Colour	Circuit	Function	Option

1	0.5	OG/L-GN	5019	Left Front Head Curtain Module High Control	-
2	0.5	L-GN	5020	Left Front Head Curtain Module Low Control	-

© Copyright Chevrolet. All rights reserved

F105R Roof Rail Air Bag - Right

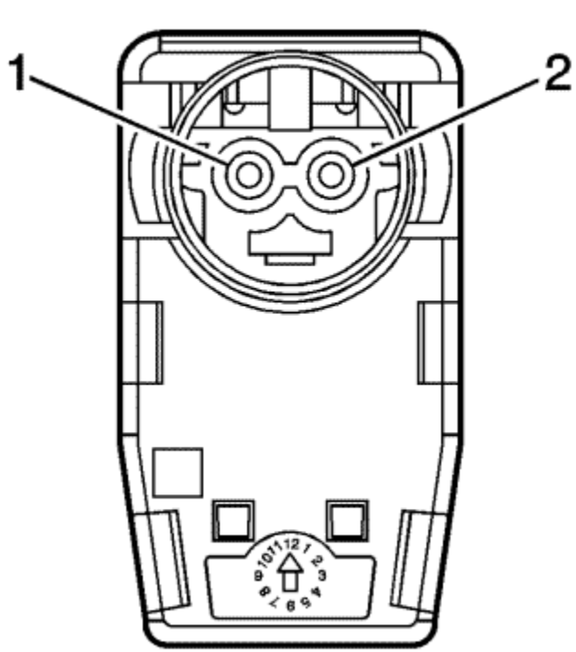

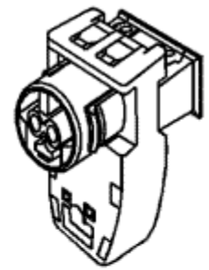

Connector Part Information

Harness Type: Body
OEM Connector: Pending
Service Connector: Pending
Description: 2-Way (YE)

Terminal Part Information

Terminated Lead: Service by Connector Assembly - Pending
Release Tool: Pending
Diagnostic Test Probe: Pending

F105R Roof Rail Air Bag - Right

Pin	Size	Colour	Circuit	Function	Option

1	0.5	OG/GY	5021	Right Front Head Curtain Module High Control	-
2	0.5	WH	5022	Right Front Head Curtain Module Low Control	-

© Copyright Chevrolet. All rights reserved

F106LF Side Air Bag - Left Front

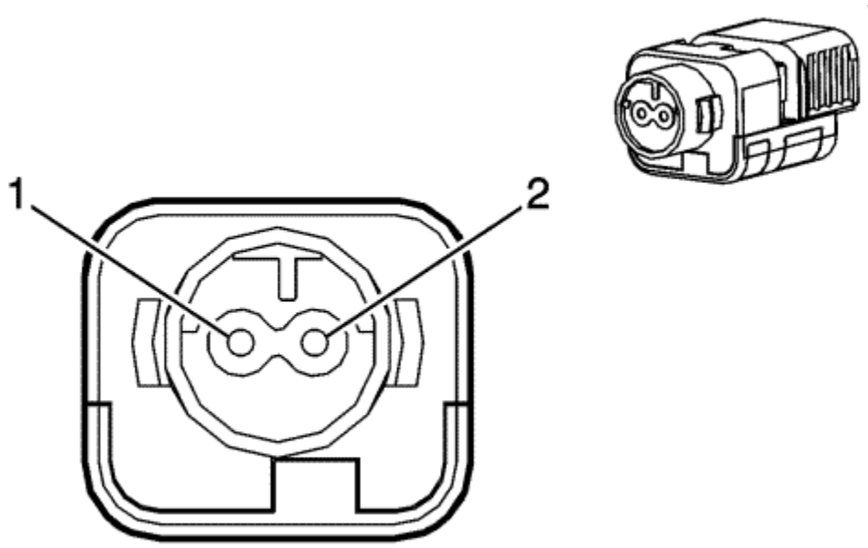

Connector Part Information

Harness Type: Side Air Bag Jumper
OEM Connector: 19153419
Service Connector: Service by Harness - See Part Catalog
Description: 2-Way F Unsealed (YE)

Terminal Part Information

Terminated Lead: Service by Harness - See Part Catalog
Release Tool: Not Available
Diagnostic Test Probe: Service by Harness - See Part Catalog

F106LF Side Air Bag - Left Front

Pin	Size	Colour	Circuit	Function	Option
1	0.35	L-BU	3068	Driver Side Impact Module High Control	--
2	0.35	L-GN/BK	3069	Driver Side Impact Module Low Control	-

© Copyright Chevrolet. All rights reserved

F106RF Side Air Bag - Right Front

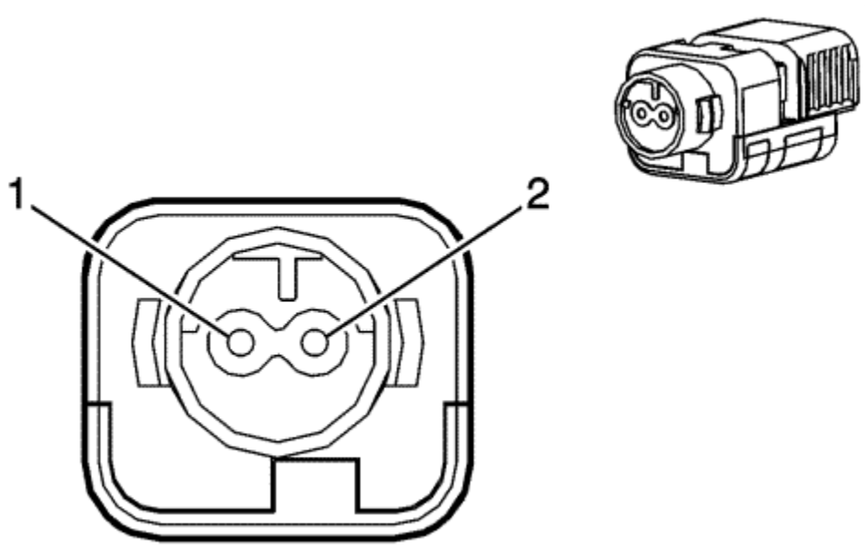

Connector Part Information

Harness Type: Side Air Bag Jumper
OEM Connector: 19153419
Service Connector: Service by Harness - See Part Catalog
Description: 2-Way F Unsealed (YE)

Terminal Part Information

Terminated Lead: Service by Harness - See Part Catalog
Release Tool: Not Available
Diagnostic Test Probe: Service by Harness - See Part Catalog

F106RF Side Air Bag - Right Front

Pin	Size	Colour	Circuit	Function	Option
1	0.35	L-BU	3066	Passenger Side Impact Module High Control	--
2	0.35	L-GN/BK	3067	Passenger Side Impact Module Low Control	-

© Copyright Chevrolet. All rights reserved

F112D Seat Belt Retractor Pretensioner - Driver

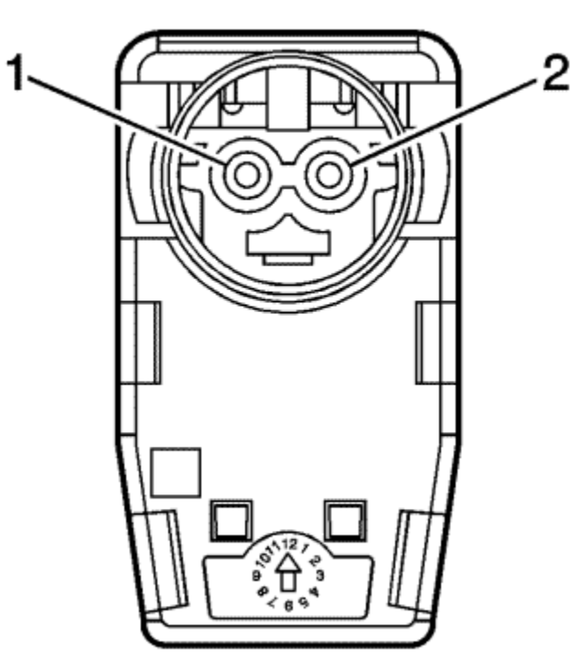

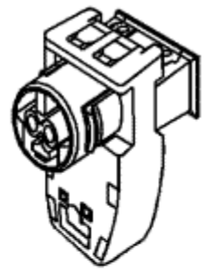

Connector Part Information

Harness Type: Body
OEM Connector: Pending
Service Connector: Pending
Description: 2-Way (YE)

Terminal Part Information

Terminated Lead: Service by Connector Assembly - Pending
Release Tool: Pending
Diagnostic Test Probe: Pending

F112D Seat Belt Retractor Pretensioner - Driver

Pin	Size	Colour	Circuit	Function	Option

1	0.5	OG/GY	3477	Driver Seat Belt Retractor Pretensioner High Control	-
2	0.5	WH	3478	Driver Seat Belt Retractor Pretensioner Low Control	-

© Copyright Chevrolet. All rights reserved

F112P Seat Belt Retractor Pretensioner - Passenger

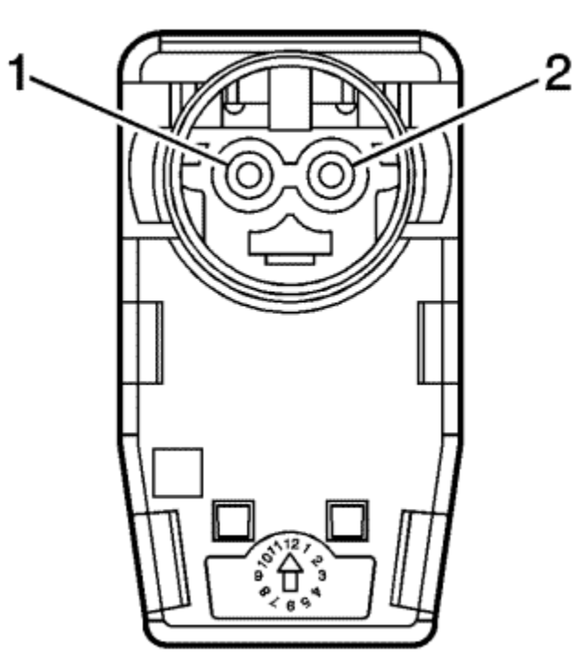

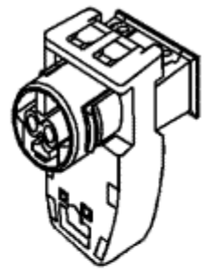

Connector Part Information

Harness Type: Body
OEM Connector: Pending
Service Connector: Pending
Description: 2-Way (YE)

Terminal Part Information

Terminated Lead: Service by Connector Assembly - Pending
Release Tool: Pending
Diagnostic Test Probe: Pending

F112P Seat Belt Retractor Pretensioner - Passenger

Pin	Size	Colour	Circuit	Function	Option

1	0.5	OG/L-GN	3475	Passenger Seat Belt Retractor Pretensioner High Control	-
2	0.5	L-GN	3476	Passenger Seat Belt Retractor Pretensioner Low Control	-

© Copyright Chevrolet. All rights reserved

F114D Knee Air Bag - Driver's

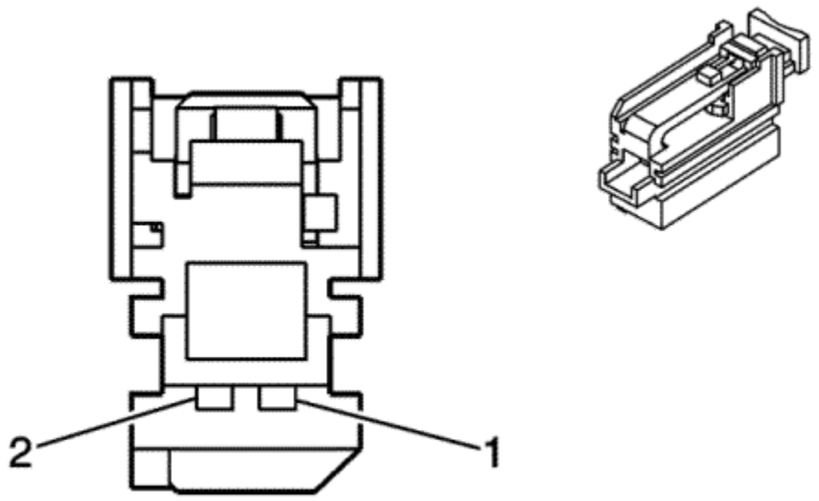

Connector Part Information

Harness Type: Instrument Panel
OEM Connector: SNAPB-02UN-1FYS
Service Connector: 19208396
Description: 2-Way F 0.64 Series Unsealed (YE)

Terminal Part Information

Terminated Lead: Service by Connector Assembly - 19208396
Release Tool: J-38125-215A
Diagnostic Test Probe: J-35616-64B (L-BU)

F114D Knee Air Bag - Driver's

Pin	Size	Colour	Circuit	Function	Option
1	0.5	OG/BK	3078	Driver Knee Module High Control	-
2	0.5	GY/OG	3079	Driver Knee Module Low Control	-

© Copyright Chevrolet. All rights reserved

F114P Knee Air Bag - Passenger

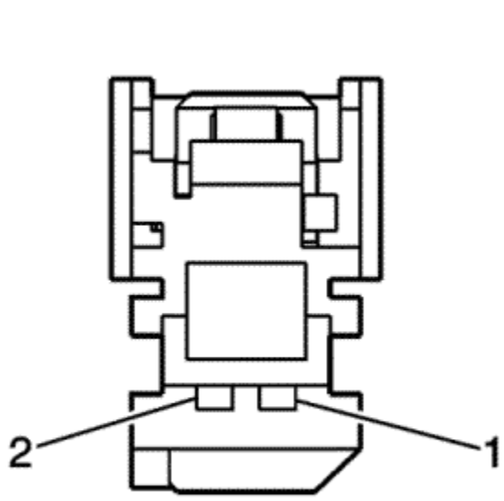

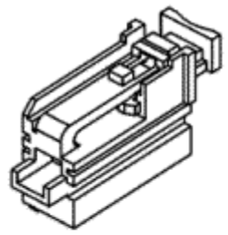

Connector Part Information

Harness Type: Instrument Panel
OEM Connector: SNAPB-02UN-1FYS
Service Connector: 19208396
Description: 2-Way F 0.64 Series Unsealed (YE)

Terminal Part Information

Terminated Lead: Service by Connector Assembly - 19208396
Release Tool: J-38125-215A
Diagnostic Test Probe: J-35616-64B (L-BU)

F114P Knee Air Bag - Passenger

Pin	Size	Colour	Circuit	Function	Option
1	0.5	OG/BK	3076	Passenger Knee Module High Control	-
2	0.5	WH/OG	3077	Passenger Knee Module Low Control	-

© Copyright Chevrolet. All rights reserved

F116 A/C Compressor Jumper Connector

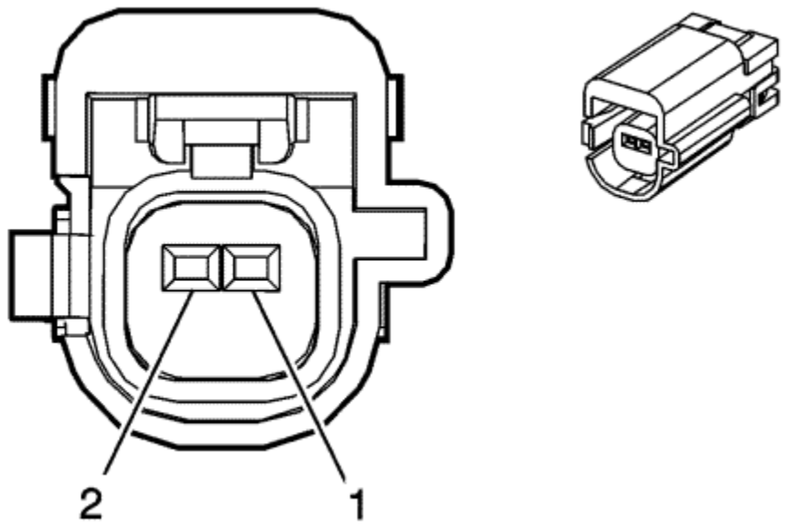

Connector Part Information

Harness Type: Engine
OEM Connector: 13738743
Service Connector: 13577520
Description: 2-Way F (BK)

Terminal Part Information

Terminated Lead: Service by Connector Assembly - 13577520
Release Tool: Pending
Diagnostic Test Probe: Pending

F116 A/C Compressor Jumper Connector

Pin	Size	Colour	Circuit	Function	Option
1	0.5	VT	5087	High-Voltage Interlock Loop Signal (1)	-
2	0.5	VT	5087	High-Voltage Interlock Loop Signal (1)	-

© Copyright Chevrolet. All rights reserved

F117 14V Power Module Jumper Connector

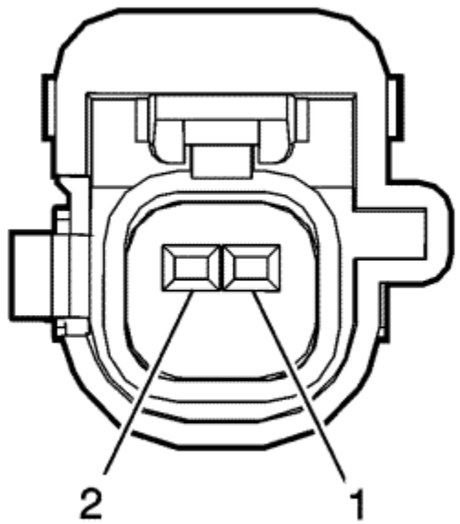

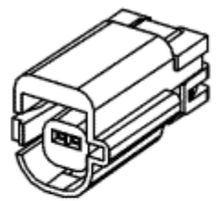

Connector Part Information

Harness Type: EVAP
OEM Connector: 13738743
Service Connector: 13577520
Description: 2-Way F (BK)

Terminal Part Information

Terminated Lead: Service by Connector Assembly - 13577520
Release Tool: Pending
Diagnostic Test Probe: Pending

F117 14V Power Module Jumper Connector

Pin	Size	Colour	Circuit	Function	Option
1	0.5	VT	5087	High-Voltage Interlock Loop Signal (1)	-
2	0.5	VT	5087	High-Voltage Interlock Loop Signal (1)	-

© Copyright Chevrolet. All rights reserved

F118 Hybrid Battery Pack Connector Jumper Connector

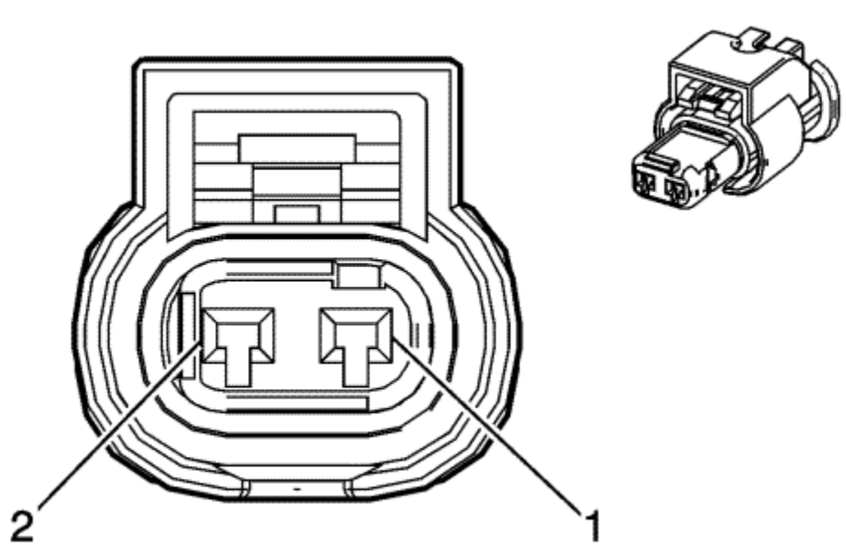

Connector Part Information

Harness Type: Body
OEM Connector: 1-1823608-1
Service Connector: 13577519
Description: 2-Way F (BK)

Terminal Part Information

Terminated Lead: Service by Connector Assembly - 13577519
Release Tool: Pending
Diagnostic Test Probe: Pending

F118 Hybrid Battery Pack Connector Jumper Connector

Pin	Size	Colour	Circuit	Function	Option
1	0.5	BK/BN	5088	Low Reference	-
2	0.5	BK/BN	5088	Low Reference	-

© Copyright Chevrolet. All rights reserved

F119 Coolant Heater Control Module Jumper Connector

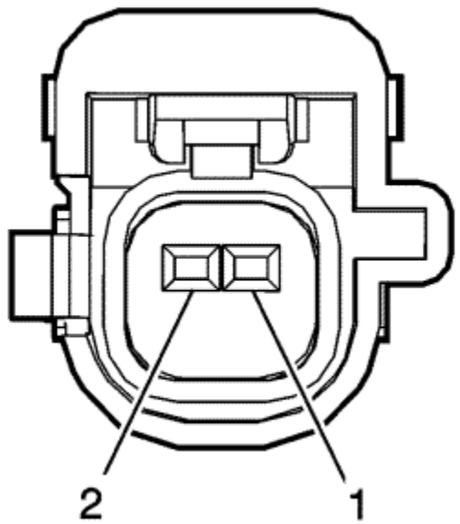

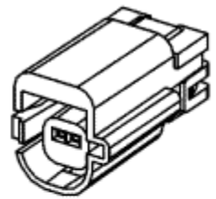

Connector Part Information

Harness Type: Body
OEM Connector: 13738743
Service Connector: 13577520
Description: 2-Way F (BK)

Terminal Part Information

Terminated Lead: Service by Connector Assembly - 13577520
Release Tool: Pending
Diagnostic Test Probe: Pending

F119 Coolant Heater Control Module Jumper Connector

Pin	Size	Colour	Circuit	Function	Option
1	0.5	BK/BN	5088	Low Reference	-
2	0.5	BK/BN	5088	Low Reference	-

© Copyright Chevrolet. All rights reserved

F120 Battery Charger Jumper Connector

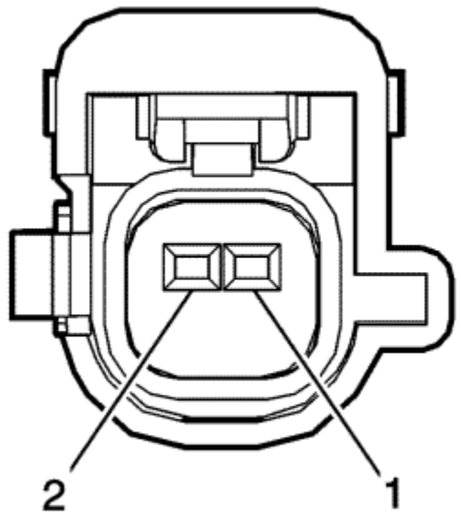

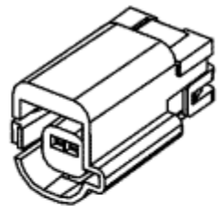

Connector Part Information

Harness Type: Forward Lamp
OEM Connector: 13738744
Service Connector: 13577521
Description: 2-Way F (GY)

Terminal Part Information

Terminated Lead: Service by Connector Assembly - 13577521
Release Tool: Pending
Diagnostic Test Probe: Pending

F120 Battery Charger Jumper Connector

Pin	Size	Colour	Circuit	Function	Option
1	0.5	GY/VT	5595	High-Voltage Interlock Loop Signal (2)	-
2	0.5	GY/VT	5595	High-Voltage Interlock Loop Signal (2)	-

© Copyright Chevrolet. All rights reserved

G1 A/C Compressor X1

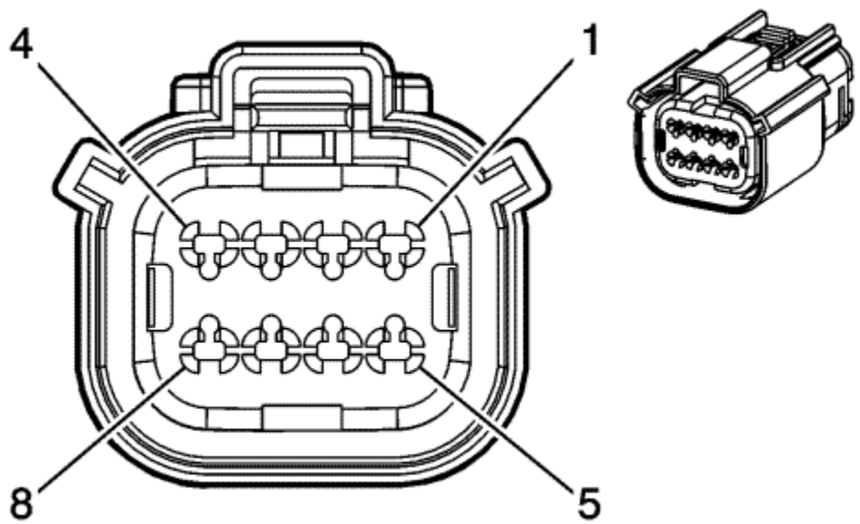

Connector Part Information

Harness Type: Engine
OEM Connector: 33472-0806
Service Connector: 13577527
Description: 8-Way F 1.5 Series, Sealed (BK)

Terminal Part Information

Terminated Lead: Service by Connector Assembly - 13577527
Release Tool: Pending
Diagnostic Test Probe: Pending

G1 A/C Compressor X1

Pin	Size	Colour	Circuit	Function	Option
1	0.5	BK	250	Ground	-
2	0.5	L-BU/WH	3977	Accessory Wake-up Serial Data 2	--
3	0.5	VT/L-GN	39	Run/Crank Ignition 1 Voltage	-

4	0.5	RD/WH	2740	Battery Positive Voltage	--
5	0.5	WH	2501	High Speed GMLAN Serial Data (-) (1)	-
6	0.5	WH	2501	High Speed GMLAN Serial Data (-) (1)	-
7	0.5	L-BU	2500	High Speed GMLAN Serial Data (+) (1)	-
8	0.5	L-BU	2500	High Speed GMLAN Serial Data (+) (1)	-

© Copyright Chevrolet. All rights reserved

G1 A/C Compressor X2

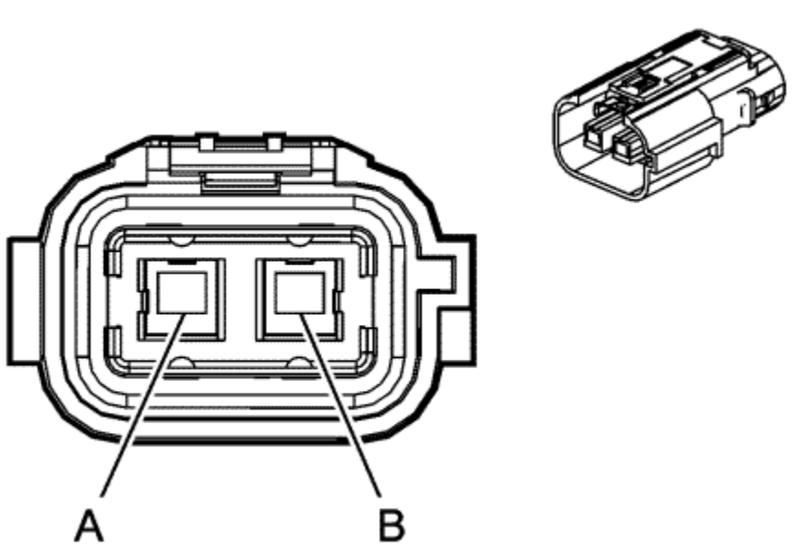

Connector Part Information

Harness Type: High Voltage
OEM Connector: 13737728
Service Connector: Service by Harness - See Part Catalog
Description: 2-Way F (OG)

Terminal Part Information

Terminated Lead: Service by Harness - See Part Catalog
Release Tool: Service by Harness - See Part Catalog
Diagnostic Test Probe: Service by Harness - See Part Catalog

G1 A/C Compressor X2

Pin	Size	Colour	Circuit	Function	Option
A	--	L-BU	5084	High-Voltage Battery (+)	-
B	--	L-BU	5083	High-Voltage Battery (-)	-

© Copyright Chevrolet. All rights reserved

G10L Cooling Fan Motor - Left

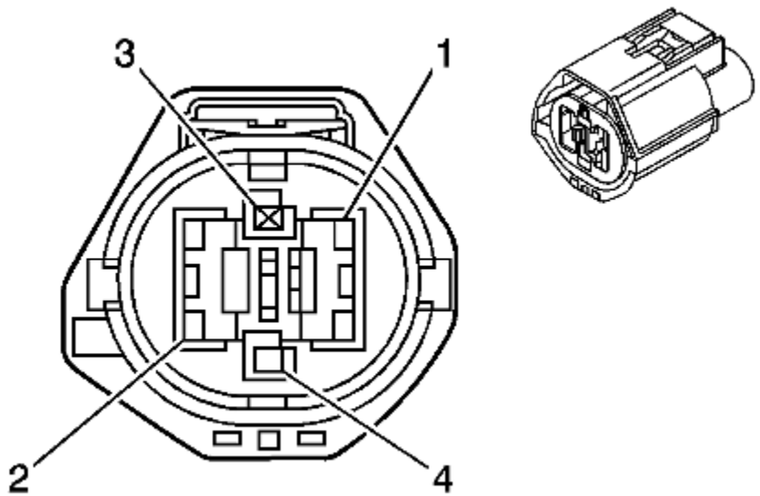

Connector Part Information

Harness Type: Cooling Fan
OEM Connector: 7283-8496-30
Service Connector: 19115593
Description: 4-Way F Mixed Series, Sealed (BK)

Terminal Part Information

Pins: 1, 2
Terminated Lead:
Release Tool: J-38125-11A
Diagnostic Test Probe: J-35616-22 (RD)

Pins: 4
Terminated Lead: 13576389
Release Tool: J-38125-11A
Diagnostic Test Probe: J-35616-2A (GY)

G10L Cooling Fan Motor - Left

Pin	Size	Colour	Circuit	Function	Option

1	4	RD/WH	140	Battery Positive Voltage	-
2	3	BK	1250	Ground	--
3	--	--	--	Not Available	-
4	0.5	WH	2368	Cooling Fan Control Signal	-

© Copyright Chevrolet. All rights reserved

G10R Cooling Fan Motor - Right

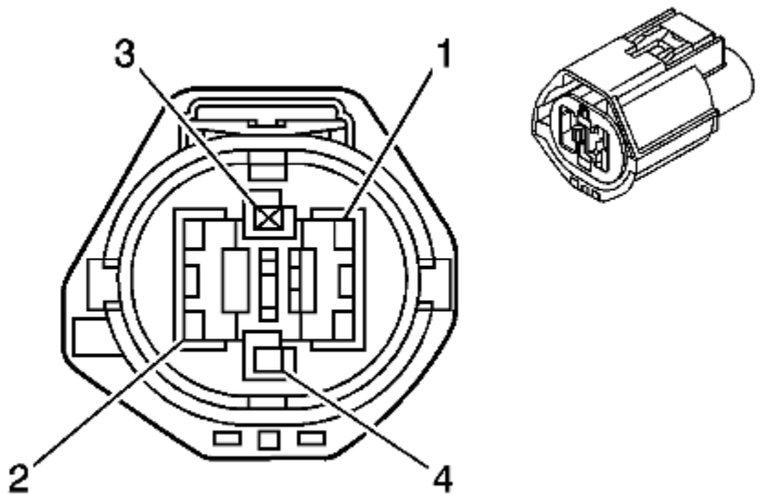

Connector Part Information

Harness Type: Cooling Fan
OEM Connector: 7283-8496-30
Service Connector: 19115593
Description: 4-Way F Mixed Series, Sealed (BK)

Terminal Part Information

Pins: 1, 2
Terminated Lead:
Release Tool: J-38125-11A
Diagnostic Test Probe: J-35616-22 (RD)

Pins: 4
Terminated Lead: 13576389
Release Tool: J-38125-11A
Diagnostic Test Probe: J-35616-2A (GY)

G10R Cooling Fan Motor - Right

Pin	Size	Colour	Circuit	Function	Option

1	4	RD/L-BU	540	Battery Positive Voltage	-
2	3	BK	1250	Ground	--
3	--	--	--	Not Available	-
4	0.5	WH	2368	Cooling Fan Control Signal	-

© Copyright Chevrolet. All rights reserved

G24 Windscreen Washer Pump

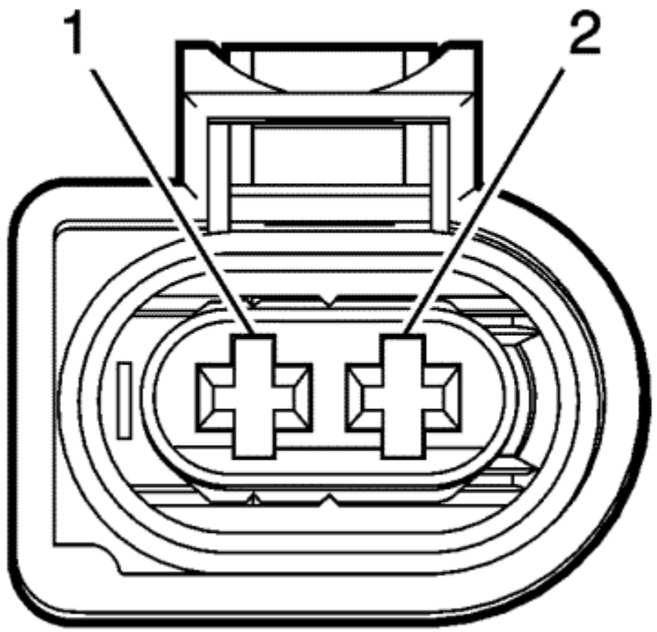

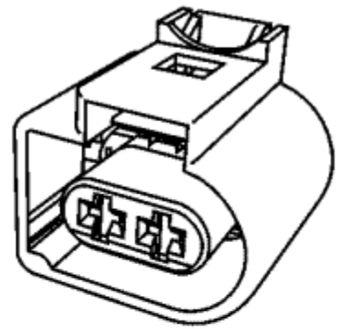

Connector Part Information

Harness Type: Forward Lamp
OEM Connector: 1-1355200-1
Service Connector: 13579422
Description: 2-Way F MCP2.8 Series (BK)

Terminal Part Information

Terminated Lead: Service by Connector Assembly - 13579422
Release Tool: J-38125-557
Diagnostic Test Probe: J-35616-35 (VT)

G24 Windscreen Washer Pump

Pin	Size	Colour	Circuit	Function	Option
1	0.5	GY/VT	228	Windscreen Washer Pump Control	-
2	0.5	BK	1950	Ground	-

© Copyright Chevrolet. All rights reserved

G35 Hybrid Electronics Coolant Pump

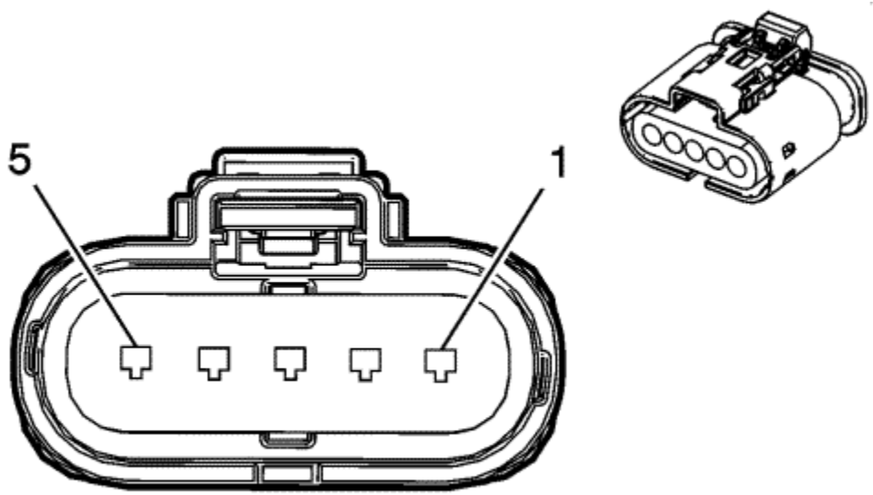

Connector Part Information

Harness Type: Cooling Fan
OEM Connector: 09408621
Service Connector: Service by Harness - See Part Catalog
Description: 5-Way F (BK)

Terminal Part Information

Terminated Lead: Service by Harness - See Part Catalog
Release Tool: Pending
Diagnostic Test Probe: Pending

G35 Hybrid Electronics Coolant Pump

Pin	Size	Colour	Circuit	Function	Option
1	0.5	BN/L-BU	3788	Electric Coolant Motor Enable	-
2	0.5	VT/L-BU	3790	Electric Coolant Motor Feedback Signal	--
3	0.5	YE/L-GN	3789	Electric Coolant Motor Control	-

4	0.75	BK	1250	Ground	-
5	0.75	RD/L-BU	3940	Battery Positive Voltage	-

© Copyright Chevrolet. All rights reserved

G36 Auxiliary Heater Coolant Pump

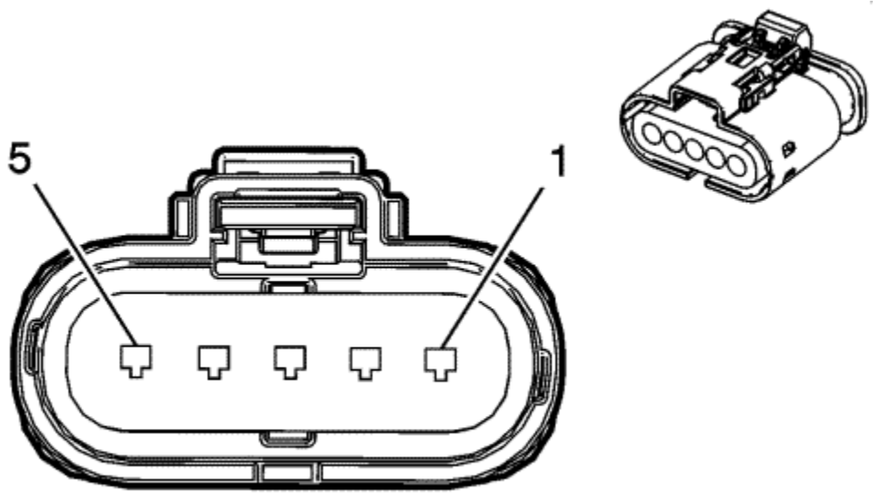

Connector Part Information

Harness Type: Auxiliary Heater Coolant Pump
OEM Connector: 09408621
Service Connector: Service by Harness - See Part Catalog
Description: 5-Way F (BK)

Terminal Part Information

Terminated Lead: Service by Harness - See Part Catalog
Release Tool: Pending
Diagnostic Test Probe: Pending

G36 Auxiliary Heater Coolant Pump

Pin	Size	Colour	Circuit	Function	Option
1	0.5	L-GN/GY	3853	Cabin Heater Coolant Motor Enable	-
2	0.5	BN/L-BU	3852	Cabin Heater Coolant Motor Feedback Signal	--
3	0.5	VT/YE	3854	Cabin Heater Coolant Motor Control	--

4	0.5	BK	1050	Ground	-
5	0.75	RD/WH	3440	Battery Positive Voltage	-

© Copyright Chevrolet. All rights reserved

G37 Hybrid Battery Pack Coolant Pump

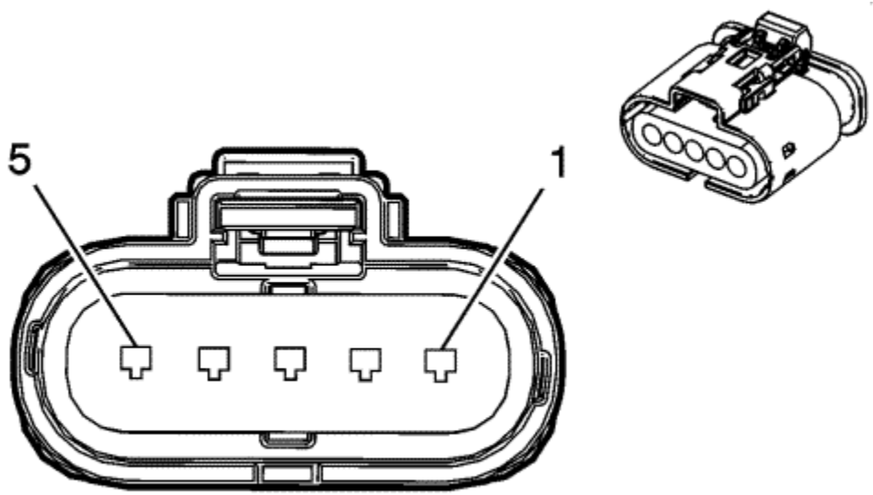

Connector Part Information

Harness Type: Cooling Fan
OEM Connector: 09408621
Service Connector: Service by Harness - See Part Catalog
Description: 5-Way F (BK)

Terminal Part Information

Terminated Lead: Service by Harness - See Part Catalog
Release Tool: Pending
Diagnostic Test Probe: Pending

G37 Hybrid Battery Pack Coolant Pump

Pin	Size	Colour	Circuit	Function	Option
1	0.5	WH/L-GN	3794	Rechargeable Energy Storage System 1 Coolant Motor Enable	-
2	0.5	YE/GY	3796	Rechargeable Energy Storage System 1 Coolant Motor Feedback Signal	--
3	0.5	L-BU/VT	3795	Rechargeable Energy Storage System 1 Coolant Motor Control	-

4	0.75	BK	1250	Ground	-
5	0.75	RD/VT	3340	Battery Positive Voltage	-

© Copyright Chevrolet. All rights reserved

G38 14V Power Module Cooling Fan

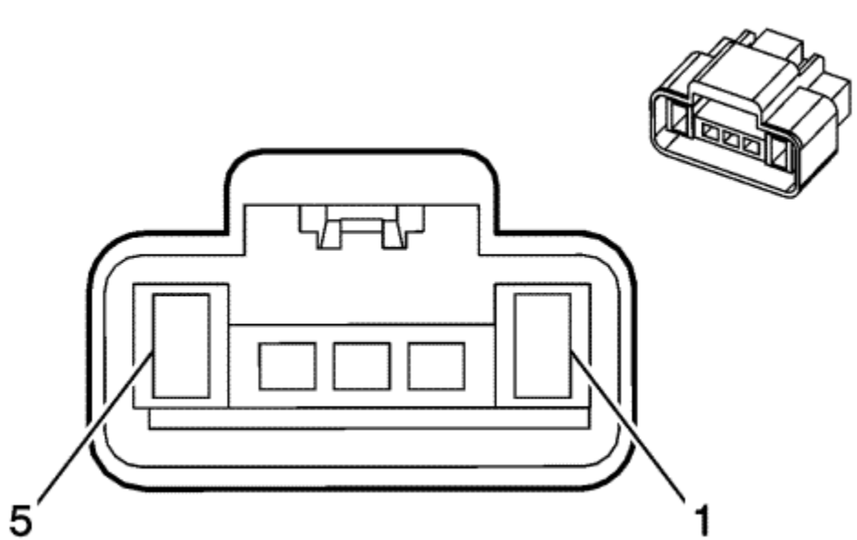

Connector Part Information

Harness Type: Body
OEM Connector: 1599317
Service Connector: 13577529
Description: 5-Way F (BK)

Terminal Part Information

Pins: 1, 5
Terminated Lead: Service by Connector Assembly - 13577529
Pins: 2-4
Terminated Lead: 13575856
Release Tool: Pending
Diagnostic Test Probe: Pending

G38 14V Power Module Cooling Fan

Pin	Size	Colour	Circuit	Function	Option
1	0.5	BK/BN	850	Ground	-

2	0.5	BN/L-GN	3793	Accessory Power Module Cooling Fan Feedback Signal	--
3	0.5	YE/GY	3792	Accessory Power Module Cooling Fan Control	-
4	0.5	L-GN/VT	3791	Accessory Power Module Cooling Fan Enable	--
5	0.5	RD/BN	2240	Battery Positive Voltage	-

© Copyright Chevrolet. All rights reserved

K1 14 V Power Module X1

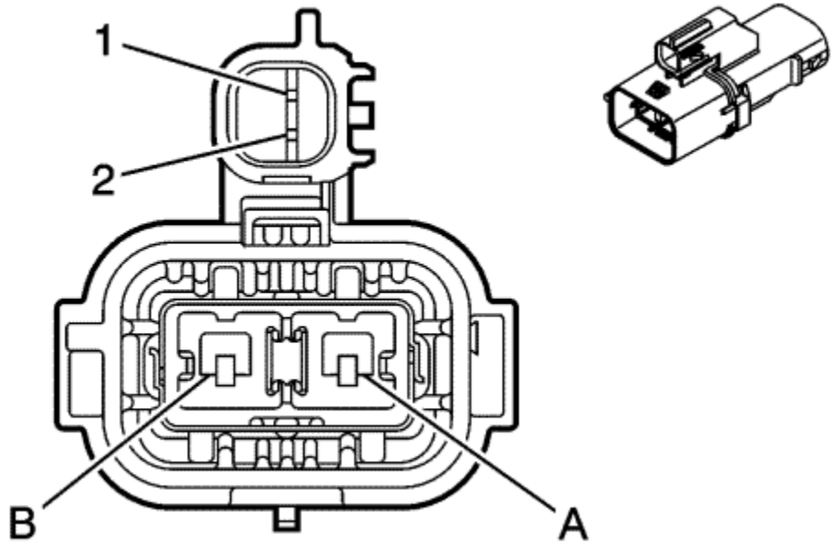

Connector Part Information

Harness Type: High Voltage
OEM Connector: 13737736
Service Connector: Service by Harness - See Part Catalog
Description: 2-Way M (OG)

Terminal Part Information

Terminated Lead: Service by Harness - See Part Catalog
Release Tool: Pending
Diagnostic Test Probe: Pending
Terminal/Tray: Not Available
Core/Insulation Crimp: Not Available

K1 14 V Power Module X1

Pin	Size	Colour	Circuit	Function	Option
A	2.0	OG	5084	High-Voltage Battery (+)	-
B	2.0	OG	5083	High-Voltage Battery (-)	--

1	--	--	--	High-Voltage Interlock Loop Shunt	-
2	--	--	--	High-Voltage Interlock Loop Shunt	-

© Copyright Chevrolet. All rights reserved

K1 14 V Power Module X2

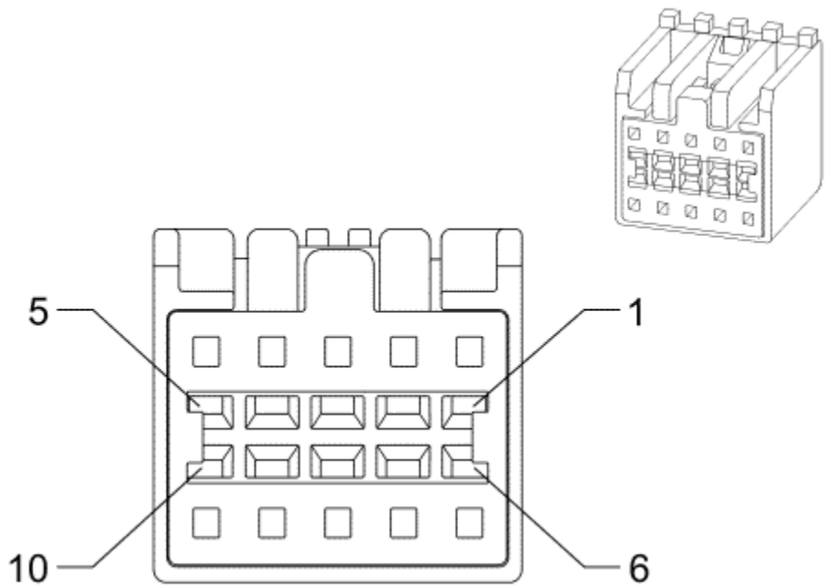

Connector Part Information

Harness Type: Body
OEM Connector: AIT2PB-10A-2AK
Service Connector: 19177676
Description: 10-Way F Kaizen 0.64 Series (BK)

Terminal Part Information

Terminated Lead: 13575865
Release Tool: J-38125-215A
Diagnostic Test Probe: J-35616-64B (L-BU)

K1 14 V Power Module X2

Pin	Size	Colour	Circuit	Function	Option
1	0.5	L-BU/BK	7493	High Speed GMLAN Serial Data (+)(3)	-

2	0.5	WH	7494	High Speed GMLAN Serial Data (-)(3)	--
3	0.5	L-BU/BK	7493	High Speed GMLAN Serial Data (+)(3)	--
4	--	--	--	Not Used	--
5	0.35	VT/L-GN	39	Run/Crank Ignition 1 Voltage	—
6	0.5	WH	7494	High Speed GMLAN Serial Data (-)(3)	--
7	0.5	WH	7494	High Speed GMLAN Serial Data (-)(3)	--
8	0.5	L-BU/BK	7493	High Speed GMLAN Serial Data (+)(3)	-
9	--	--	--	Not Used	--
10	0.5	L-BU/WH	3977	Accessory Wake-up Serial Data 2	-

© Copyright Chevrolet. All rights reserved

K1 14 V Power Module X3

Connector Part Information

Harness Type: Positive Battery Cable
OEM Connector: AKX46076
Service Connector: Service by Component - See Part Catalogue
Description: Ring Terminal

Terminal Part Information

Terminated Lead: Service by Component - See Part Catalogue
Release Tool: Not Available
Diagnostic Test Probe: Not Available

K1 14 V Power Module X3

Pin	Size	Colour	Circuit	Function	Option
1	20	BK	50	Ground	-

© Copyright Chevrolet. All rights reserved

K1 14 V Power Module X4

Connector Part Information

Harness Type: Positive Battery Cable
OEM Connector: AKZ32232
Service Connector: Service by Component - See Part Catalogue
Description: Ring Terminal

Terminal Part Information

Terminated Lead: Service by Component - See Part Catalogue
Release Tool: Not Available
Diagnostic Test Probe: Not Available

K1 14 V Power Module X4

Pin	Size	Colour	Circuit	Function	Option
1	20	RD/YE	2	Battery 14 V Power Supply	-

© Copyright Chevrolet. All rights reserved

K8 Blower Motor Control Module X1

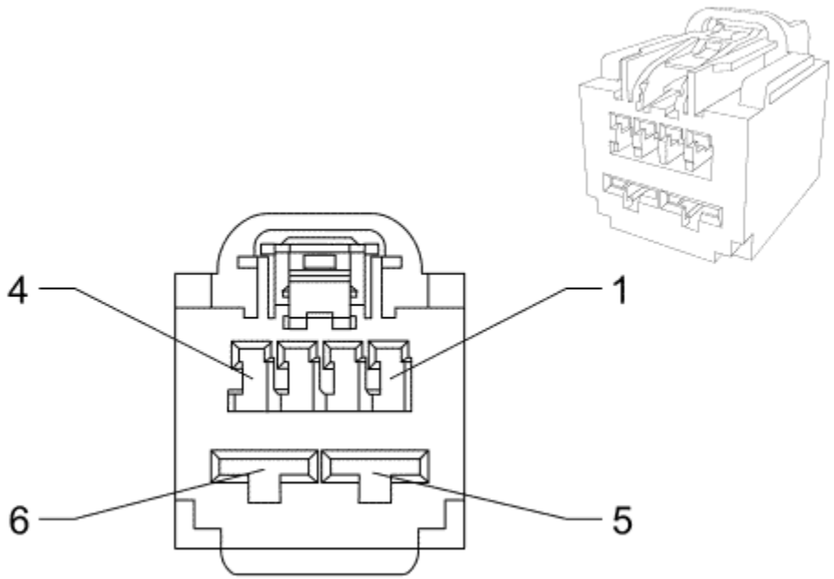

Connector Part Information

Harness Type: Instrument Panel
OEM Connector: 7283-9749-30
Service Connector: 88988512
Description: 6-Way F YESC Kaizen Series (BK)

Terminal Part Information

Pins: 3
Terminated Lead: Service by Connector Assembly - 88988512
Release Tool: J-38125-553
Diagnostic Test Probe: J-35616-2A (GY)

Pins: 5, 6
Terminated Lead: Service by Connector Assembly - 88988512
Release Tool: J-38125-11A
Diagnostic Test Probe: J-35616-42 (RD)

K8 Blower Motor Control Module X1

Pin	Size	Colour	Circuit	Function	Option
1-2	--	--	--	Not Used	--
3	0.35	L-BU/GY	754	Blower Motor Speed Control	--
4	--	--	--	Not Used	--
5	4	BK	2150	Ground	—
6	4	RD/L-BU	840	Battery Positive Voltage	-

© Copyright Chevrolet. All rights reserved

K9 Body Control Module X1

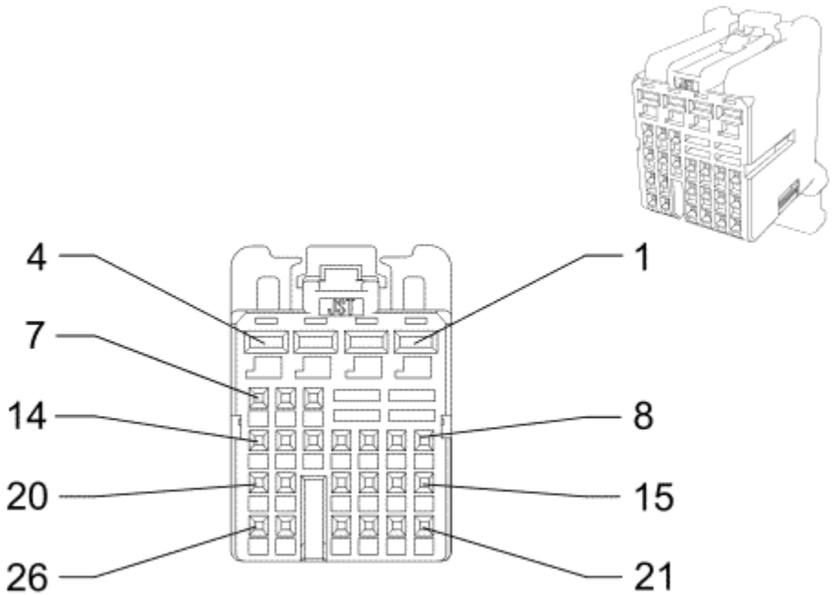

Connector Part Information

Harness Type: Instrument Panel
OEM Connector: HIT2PB-26-B-S
Service Connector: 19151262
Description: 26-Way F 0.64 2.8 Series (WH)

Terminal Part Information

Pins: 1
Terminated Lead: Pending
Release Tool: J-38125-12A
Diagnostic Test Probe: J-35616-35 (VT)

Pins: 2
Terminated Lead: 13575873
Release Tool: J-38125-12A
Diagnostic Test Probe: J-35616-35 (VT)

Pins: 3, 4

Terminated Lead: 13327199
Release Tool: J-38125-12A
Diagnostic Test Probe: J-35616-35 (VT)

Pins: 5, 7, 11, 13, 14, 16, 19-22, 24-26
Terminated Lead: 13575870
Release Tool: J-38125-12A
Diagnostic Test Probe: J-35616-64B (L-BU)

K9 Body Control Module X1

Pin	Size	Colour	Circuit	Function	Option
1	1.5	BK	2150	Ground	--
2	2.5	RD/YE	4340	Battery Positive Voltage	--
3	0.75	RD/L-GN	4440	Battery Positive Voltage	-
4	0.75	RD/L-BU	4540	Battery Positive Voltage	-
5	0.35	WH	6816	Indicator Dimming Control	—
6	--	--	--	Not Used	--
7	0.35	BK/YE	5005	Low Reference	-
8-10	--	--	--	Not Used	--
11	0.5	L-GN/BN	306	Headlamp Switch Headlamps Off Signal Control	-
12	--	--	--	Not Used	--
13	0.35	L-GN/RD	812	12 Volt Reference	-
14	0.5	GY/L-GN	328	Interior Lamp Defeat Switch Signal	-
15	--	--	--	Not Used	--
16	0.5	WH/VT	103	Headlamp Switch On Signal	-
17-18	--	--	--	Not Used	--
19	0.35	BK/BN	5360	Low Reference	-
20	0.35	L-BU/BK	5719	Ignition Mode Switch Start LED Signal	--
21	0.35	WH/BN	3955	Charging Complete Indicator Control	-
22	0.5	L-GN/GY	13	Headlamp Switch Park Lamp Signal	-
23	--	--	--	Not Used	--
24	0.5	WH	2501	High Speed GMLAN Serial Data (-) (1)	-
25	0.5	L-BU	2500	High Speed GMLAN Serial Data (+) (1)	-
26	0.5	L-BU/WH	3275	Remote Function Actuator Receive Signal	-

© Copyright Chevrolet. All rights reserved

K9 Body Control Module X2

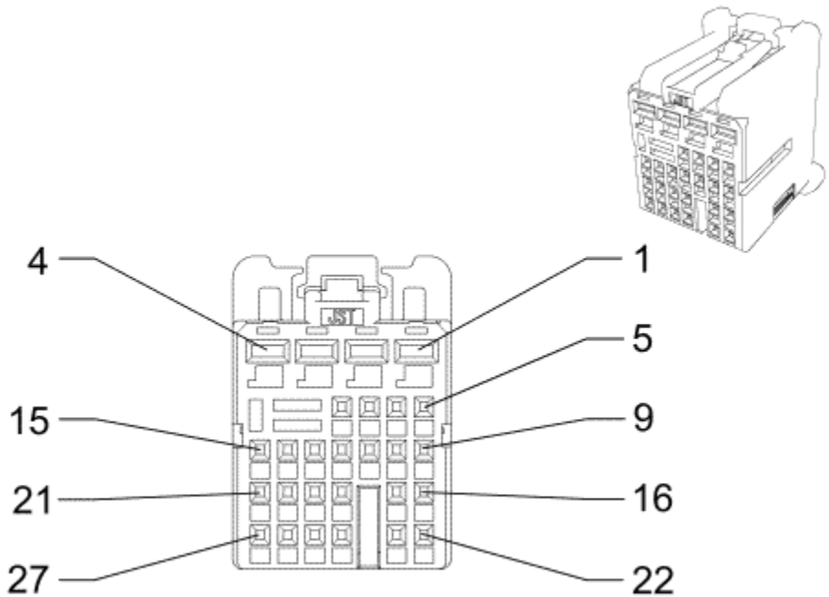

Connector Part Information

Harness Type: Instrument Panel
OEM Connector: HIT2PB-27-C-LE
Service Connector: 19151266
Description: 27-Way F 0.64 2.8 Series (L-BU)

Terminal Part Information

Pins: 1, 3, 4
Terminated Lead: 13327199
Release Tool: J-38125-12A
Diagnostic Test Probe: J-35616-35 (VT)

Pins: 2
Terminated Lead: Pending
Release Tool: J-38125-12A
Diagnostic Test Probe: J-35616-35 (VT)

Pins: 7-10, 13, 15-17, 19, 21, 22, 25-27

Terminated Lead: 13575870
Release Tool: J-38125-12A
Diagnostic Test Probe: J-35616-64B (L-BU)

K9 Body Control Module X2

Pin	Size	Colour	Circuit	Function	Option
1	0.75	RD/BN	4240	Battery Positive Voltage	-
2	1.5	BK	2150	Ground	--
3	0.75	RD/VT	4640	Battery Positive Voltage	--
4	1	RD/BN	4940	Battery Positive Voltage	-
5-6	--	--	--	Not Used	--
7	0.35	L-BU/YE	5361	Brake Apply Sensor Signal	--
8	0.5	YE	6817	LED Backlight Dimming Control	-
9	0.35	YE/GY	44	Instrument Panel Lamp Dimmer Switch Signal	--
10	0.5	WH/L-BU	278	Ambient Light Sensor Signal	-
11-12	--	--	--	Not Used	--
13	0.35	WH	5359	Brake Apply Sensor Supply Voltage	-
14	--	--	--	Not Used	--
15	0.5	BN/WH	781	Driver Door Lock Switch Unlock Signal	-
16	0.5	GY	3273	Remote Function Actuator Return	-
17	0.35	L-BU/L-GN	5723	Ignition Mode Switch Mode Voltage	-
18	--	--	--	Not Used	--
19	0.5	BN/YE	780	Driver Door Lock Switch Lock Signal	-
20	--	--	--	Not Used	--
21	0.5	L-GN/GY	6135	Linear Interconnect Network Bus 4	-
22	0.5	L-GN	5060	Low Speed GMLAN Serial Data	-
23-24	--	--	--	Not Used	--
25	0.5	GY/WH	3272	Remote Function Actuator Supply Voltage	-
26	0.5	L-GN/WH	111	Hazard Switch Signal	-
27	0.5	YE/L-GN	3274	Remote Function Actuator Transmit Signal	-

© Copyright Chevrolet. All rights reserved

K9 Body Control Module X3

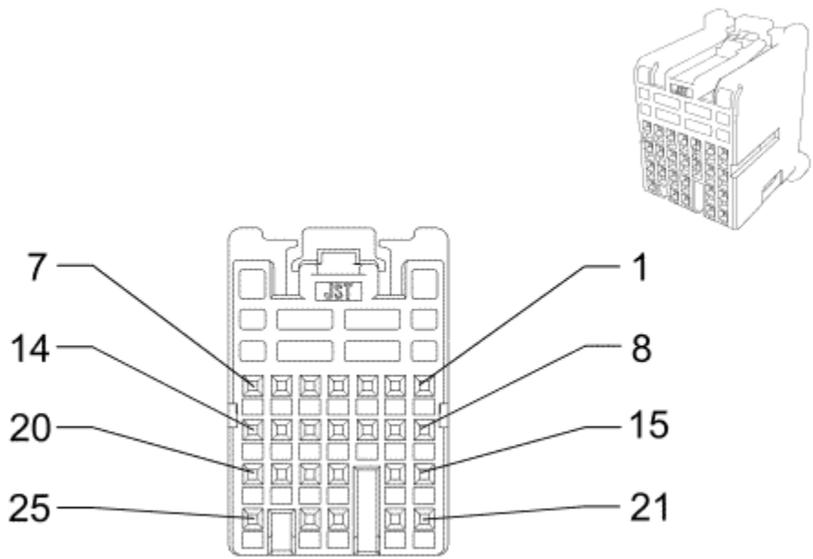

Connector Part Information

Harness Type: Instrument Panel
OEM Connector: HIT2PB-25-A-LM
Service Connector: 19151261
Description: 25-Way F 0.64 Series (L-GN)

Terminal Part Information

Terminated Lead: 13575870
Release Tool: J-38125-12A
Diagnostic Test Probe: J-35616-64B (L-BU)

K9 Body Control Module X3

Pin	Size	Colour	Circuit	Function	Option
1	0.35	L-GN/GY	3277	Vehicle Anti-Theft System Immobiliser Return	-

2	0.35	L-GN/VT	7533	Linear Interconnect Network Bus 11	--
3	0.35	GY/BK	3276	Vehicle Anti-Theft System Immobiliser Supply Voltage	--
4	0.35	WH/RD	1444	12 Volt Reference	-
5	0.35	VT/YE	4	Accessory Voltage	--
6	0.35	VT/BK	3	Run/Crank Ignition 1 Voltage	-
7	--	--	--	Not Used	--
8	0.35	L-GN/WH	6819	Steering Wheel Resistor Ladder Signal #2	-
9	0.35	BN/L-GN	1884	Cruise Control Set/Coast/Resume/Accelerate Switch Signal	--
10	0.35	BK/GY	6009	Low Reference	--
11	0.35	WH	524	Headlamp Dimmer Switch Main Beam Signal	-
12	0.35	L-BU/WH	1414	Left Front Indicator Switch Signal	--
13	0.35	YE/L-BU	1714	Windscreen Wiper Switch Low Signal	-
14-16	--	--	--	Not Used	--
17	0.35	YE/BN	307	Headlamp Switch Flash To Pass Signal	--
18	0.35	L-GN/WH	3287	Horn Switch Signal	-
19	--	--	--	Not Used	--
20	0.35	GY	1715	Windshield Wiper Switch High Signal	-
21-23	--	--	--	Not Used	--
24	0.35	L-GN/VT	1415	Right Front Indicator Switch Signal	-
25	0.5	WH/BK	94	Windscreen Washer Switch Signal	-

© Copyright Chevrolet. All rights reserved

K9 Body Control Module X4

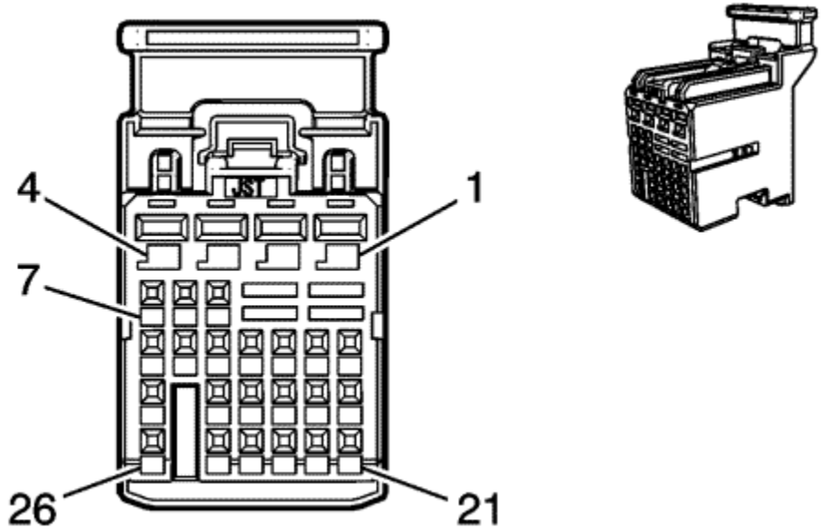

Connector Part Information

Harness Type: Instrument Panel
OEM Connector: HIT2PB-26-D-K
Service Connector: 19151263
Description: 26-Way F 0.64 2.8 Series (BK)

Terminal Part Information

Pins: 1-4
Terminated Lead: 13327199
Release Tool: J-38125-12A
Diagnostic Test Probe: J-35616-35 (VT)

Pins: 5-7, 11-16, 18, 20-24, 26
Terminated Lead: 13575870
Release Tool: J-38125-12A
Diagnostic Test Probe: J-35616-64B (L-BU)

K9 Body Control Module X4

Pin	Size	Colour	Circuit	Function	Option
1	1	YE	312	Right Headlamp Low Beam Supply Voltage	-
2	1	YE	712	Left Headlamp Low Beam Supply Voltage	--
3	0.75	L-GN/VT	1315	Right Front Indicator Lamp Supply Voltage	-
4	0.75	L-GN/VT	619	Right Rear Indicator Lamp Supply Voltage	-
5	0.35	VT	1203	Right Park Lamp Supply Voltage	--
6	0.35	WH/YE	1204	Left Park Lamp Supply Voltage	--
7	0.35	L-BU/GY	809	Left Tail Lamp Supply Voltage	-
8-10	--	--	--	Not Used	--
11	0.5	BN/YE	820	CHMSL Supply Voltage	-
12	0.5	VT/YE	43	Accessory Voltage	-
13	0.5	L-GN/YE	6846	Rear Number Plate Lamp Supply Voltage	--
14	0.5	BN/GY	2268	Windscreen Washer Relay Control	-
15	0.35	L-GN/VT	5199	Run/Crank Relay Coil Control	-
16	0.5	GY	91	Windscreen Wiper Motor Relay Coil Supply Voltage	--
17	--	--	--	Not Used	--
18	0.5	WH/YE	5075	Current Sensor Signal	-
19	--	--	--	Not Used	--
20	0.5	RD/GY	2840	Battery Positive Voltage	-
21	0.5	L-BU/VT	5076	Current Sensor Supply Voltage	-
22	0.5	VT/YE	5985	Accessory Wakeup Serial Data	-
23	0.5	WH/L-BU	5986	Serial Data Communication Enable	-
24	0.5	BN/L-GN	109	Bonnet Ajar Switch Signal	--
25	--	--	--	Not Used	--
26	0.5	BK/BN	1798	Low Reference	-

© Copyright Chevrolet. All rights reserved

K9 Body Control Module X5

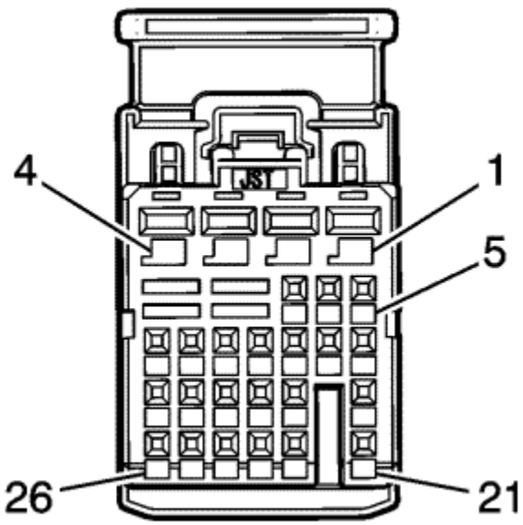

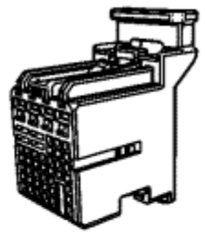

Connector Part Information

Harness Type: Instrument Panel
OEM Connector: HIT2PB-26-E-N
Service Connector: 19151264
Description: 26-Way F 0.64 2.8 Series (BN)

Terminal Part Information

Pins: 1-4
Terminated Lead: 13327199
Release Tool: J-38125-12A
Diagnostic Test Probe: J-35616-35 (VT)

Pins: 5-7, 11, 12, 14, 16, 18, 19
Terminated Lead: 13575870
Release Tool: J-38125-12A
Diagnostic Test Probe: J-35616-64B (L-BU)

K9 Body Control Module X5

Pin	Size	Colour	Circuit	Function	Option
1	0.75	YE/BN	618	Left Rear Indicator Lamp Supply Voltage	--
2	0.75	L-BU/WH	1314	Left Front Indicator Lamp Supply Voltage	--
3	0.75	RD/GY	4840	Battery Positive Voltage	-
4	0.75	RD/GY	4140	Battery Positive Voltage	-
5	0.35	GY/L-BU	7538	Left Front DRL Supply Voltage	--
6	0.5	BK/VT	5077	Low Reference	--
7	0.35	WH	609	Right Tail Lamp Supply Voltage	-
8-10	--	--	--	Not Used	--
11	0.35	L-GN/BN	5706	Endgate Latch Relay Supply Voltage	-
12	0.35	WH/L-BU	6311	Cruise/ETC/TCC Brake Signal	-
13	--	--	--	Not Used	--
14	0.35	VT/BN	41	Run Ignition 3 Voltage	-
15	--	--	--	Not Used	--
16	0.35	VT/YE	3267	Child Security Lock Relay Control	--
17	--	--	--	Not Used	--
18	0.35	BN/VT	1969	Headlamp Main Beam Relay Control	--
19	0.35	BN/WH	28	Horn Relay Control	-
20-26	--	--	--	Not Used	--

© Copyright Chevrolet. All rights reserved

K9 Body Control Module X6

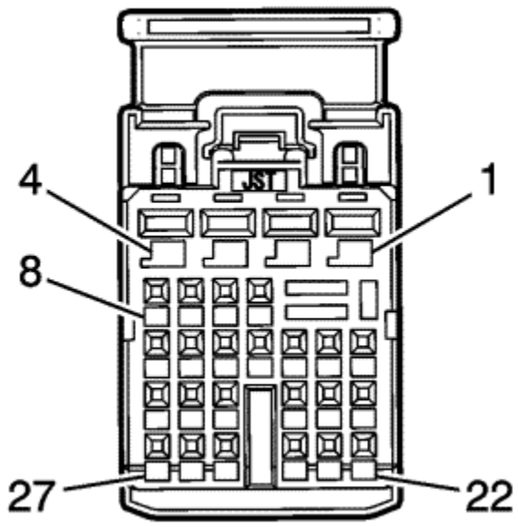

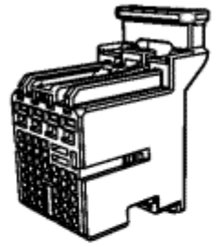

Connector Part Information

Harness Type: Instrument Panel
OEM Connector: HIT2PB-27-F-PK
Service Connector: 19151267
Description: 27-Way F 0.64 2.8 Series (PK)

Terminal Part Information

Pins: 1, 2, 4
Terminated Lead: 13327199
Release Tool: J-38125-12A
Diagnostic Test Probe: J-35616-35 (VT)

Pins: 3
Terminated Lead: Pending
Release Tool: J-38125-12A
Diagnostic Test Probe: J-35616-35 (VT)

Pins: 5, 10, 15, 16, 21, 22, 24, 25
Terminated Lead: 13575870
Release Tool: J-38125-12A

K9 Body Control Module X6

Pin	Size	Colour	Circuit	Function	Option
1	0.75	GY	5911	Door Lock Actuator Lock Control 2	-
2	1	GY/L-GN	3271	Door Lock Control (2)	--
3	1.5	BK	2150	Ground	-
4	0.75	BN/YE	294	Door Lock Actuator Unlock Control	--
5	0.5	VT/GY	1303	Tail Gate Ajar Switch Signal (1)	--
6-9	--	--	--	Not Used	--
10	0.5	L-GN/YE	6134	Linear Interconnect Network Bus 3	-
11-14	--	--	--	Not Used	-
15	0.35	YE/L-BU	5797	Rear Closure Handle Switch Open Signal	-
16	0.35	L-GN/BN	6132	Linear Interconnect Network Bus 1	-
17-20	--	--	--	Not Used	--
21	0.35	WH/VT	6567	Rear Direction Indicator Lamp Feedback Signal	-
22	0.35	GY	5054	Sport Mode Switch Signal	-
23	--	--	--	Not Used	--
24	0.5	L-BU	2500	High Speed GMLAN Serial Data (+) (1)	-
25	0.5	WH	2501	High Speed GMLAN Serial Data (-) (1)	-
26-27	--	--	--	Not Used	--

© Copyright Chevrolet. All rights reserved

K9 Body Control Module X7

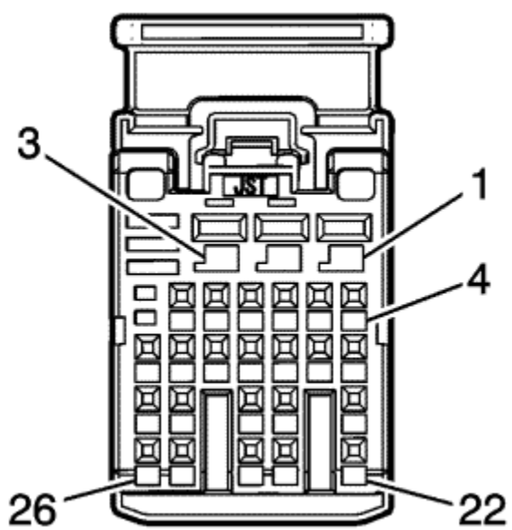

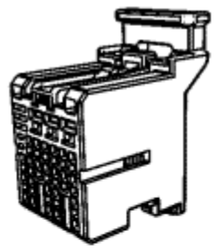

Connector Part Information

Harness Type: Instrument Panel
OEM Connector: HIT2PB-26-G-H
Service Connector: 19151265
Description: 26-Way F 0.64 2.8 Series (GY)

Terminal Part Information

Pins: 1-3
Terminated Lead: 13327199
Release Tool: J-38125-12A
Diagnostic Test Probe: J-35616-35 (VT)

Pins: 6-9, 12, 13, 18, 19, 21-23
Terminated Lead: 13575870
Release Tool: J-38125-12A
Diagnostic Test Probe: J-35616-64B (L-BU)

K9 Body Control Module X7

Pin	Size	Colour	Circuit	Function	Option
1	0.75	GY	157	Interior Lamp Control	-
2	0.75	WH/BN	6815	Inadvertent Power Control	--
3	0.75	L-GN/WH	1324	Reverse Lamp Supply Voltage	-
4-5	--	--	--	Not Used	--
6	0.35	VT/BK	7553	Park Lock Solenoid Control	--
7	0.5	L-GN/GY	737	Boot Lamp Control	--
8	0.35	L-BU/BN	7539	Right Front DRL Supply Voltage	-
9	0.5	YE	6817	LED Backlight Dimming Control	-
10-11	--	--	--	Not Used	--
12	0.35	BN/WH	3269	Child Security Lock Motor Status Signal Left Rear	--
13	0.35	WH/VT	5905	Key Capture/Column Lock Shift Position Signal	-
14-17	--	--	--	Not Used	--
18	0.35	GY/BK	3268	Child Security Lock Motor Status Signal Right Rear	--
19	0.5	GY	156	Courtesy Lamp Switch Signal	-
20	--	--	--	Not Used	--
21	0.35	WH/BK	7544	Right Rear Direction Indicator Feedback Signal	-
22	0.35	YE/GY	230	Instrument Panel Lamp Dimming Control	-
23	0.5	L-GN	5060	Low Speed GMLAN Serial Data	-
24-26	--	--	--	Not Used	--

© Copyright Chevrolet. All rights reserved

K10 Coolant Heater Control Module X1

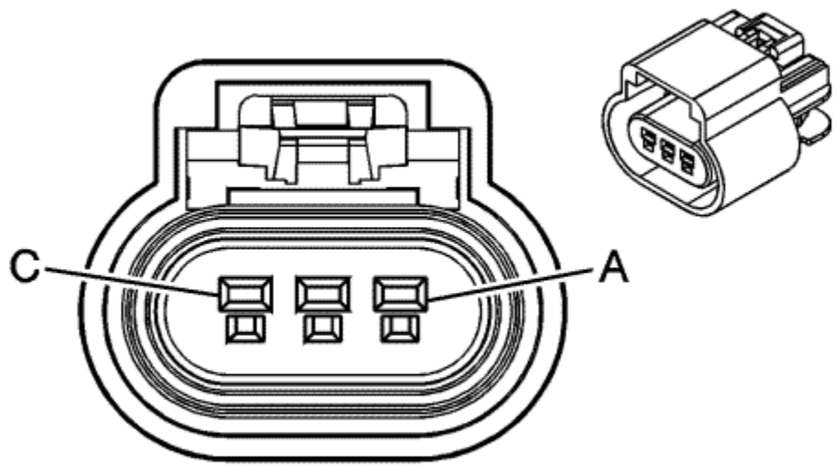

Connector Part Information

Harness Type: Body
OEM Connector: 13519047
Service Connector: 15306388
Description: 3-Way F GT 150 Series, Sealed (BK)

Terminal Part Information

Terminated Lead: Service by Connector Assembly - Pending
Release Tool: J-38125-553
Diagnostic Test Probe: J-35616-2A (GY)

K10 Coolant Heater Control Module X1

Pin	Size	Colour	Circuit	Function	Option
A	0.5	BK	2050	Ground	--
B	0.5	L-GN	5060	Low Speed GMLAN Serial Data	-
C	0.5	RD/GY	2140	Battery Positive Voltage	-

© Copyright Chevrolet. All rights reserved

K10 Coolant Heater Control Module X2

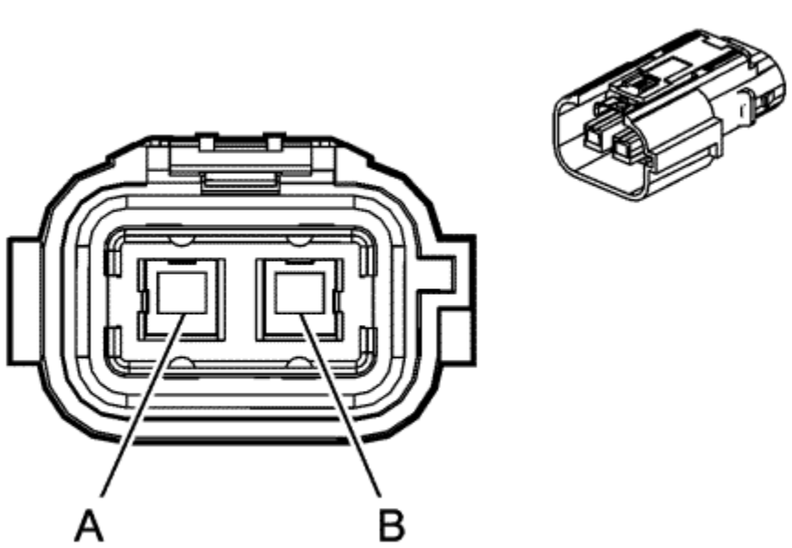

Connector Part Information

Harness Type: High Voltage
OEM Connector: 13737728
Service Connector: Service by Harness - See Part Catalog
Description: 2-Way F (OG)

Terminal Part Information

Terminated Lead: Service by Harness - See Part Catalog
Release Tool: Service by Harness - See Part Catalog
Diagnostic Test Probe: Service by Harness - See Part Catalog

K10 Coolant Heater Control Module X2

Pin	Size	Colour	Circuit	Function	Option
A	--	L-BU	5084	High-Voltage Battery (+)	-
B	--	L-BU	5083	High-Voltage Battery (-)	-

© Copyright Chevrolet. All rights reserved

K17 Electronic Brake Control Module

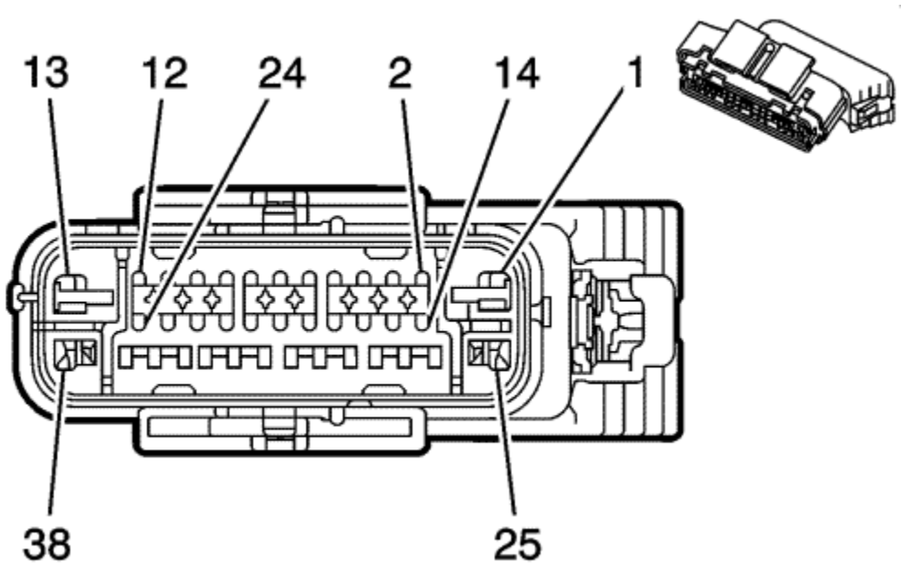

Connector Part Information

Harness Type: Body
OEM Connector: 31380-1000
Service Connector: 19178085
Description: 38-Way F 250/280/6.3 Series, Sealed (BK)

Terminal Part Information

Pins: 1, 13
Terminated Lead: Pending
Release Tool: J-38125-11A
Diagnostic Test Probe: J-35616-42 (RD)

Pins: 2-6, 9, 11, 12, 14, 15, 17-19, 21-24, 28, 29 and 32-37
Terminated Lead: Pending
Release Tool: J-38125-215A
Diagnostic Test Probe: J-35616-64B (L-BU)

Pins: 25, 38
Terminated Lead: 13575403
Release Tool: J-38125-553

K17 Electronic Brake Control Module

Pin	Size	Colour	Circuit	Function	Option
1	5	RD/BN	1742	Battery Positive Voltage	-
2	0.5	BK/VT	883	Low Reference	--
3	0.5	VT	882	Wheel Speed Sensor Signal Right Rear	-
4	0.5	L-BU	884	Wheel Speed Sensor Signal Left Rear	--
5	0.5	BK/L-BU	885	Low Reference	--
6	0.5	BK/YE	833	Low Reference	-
7-8	--	--	--	Not Used	--
9	0.35	L-BU/YE	3334	Brake Pedal Travel Sensor 1 Signal	-
10	--	--	--	Not Used	--
11	0.5	L-GN/GY	333	Brake Fluid Level Sensor Signal	-
12	0.5	L-BU/WH	3977	Accessory Wake-up Serial Data 2	--
13	5	BK	2650	Ground	-
14	0.35	VT/GY	139	Run/Crank Ignition 1 Voltage	-
15	0.35	BK/GY	718	Low Reference	-
16	--	--	--	Not Used	--
17	0.5	YE	872	Wheel Speed Sensor Signal Right Front	-
18	0.5	L-GN/BN	2087	Combined Vehicle Inertial Sensor Supply Voltage	--
19	0.35	L-BU/RD	3335	Brake Pedal Travel Sensor 1 High Reference	-
20	--	--	--	Not Used	--
21	0.5	WH	6106	High Speed GMLAN Serial Data (-) (2)	-
22	0.5	WH	6106	High Speed GMLAN Serial Data (-) (2)	-
23	0.5	WH	2501	High Speed GMLAN Serial Data (-) (1)	-
24	0.5	WH	2501	High Speed GMLAN Serial Data (-) (1)	-
25	3	RD/WH	342	Battery Positive Voltage	-
26-27	--	--	--	Not Used	--
28	0.5	GY	830	Wheel Speed Sensor Signal Left Front	-
29	0.5	BK/GY	873	Low Reference	-
30-31	--	--	--	Not Used	--
32	0.35	GY/BK	817	Vehicle Speed Signal	-

33	0.5	L-BU/YE	6105	High Speed GMLAN Serial Data (+) (2)	-
34	0.5	L-BU/YE	6105	High Speed GMLAN Serial Data (+) (2)	-
35	0.35	VT/BN	3333	Brake Pedal Travel Sensor 2 Signal	--
36	0.5	L-BU	2500	High Speed GMLAN Serial Data (+) (1)	-
37	0.5	L-BU	2500	High Speed GMLAN Serial Data (+) (1)	-
38	3	BK	2650	Ground	-

© Copyright Chevrolet. All rights reserved

K20 Engine Control Module X1

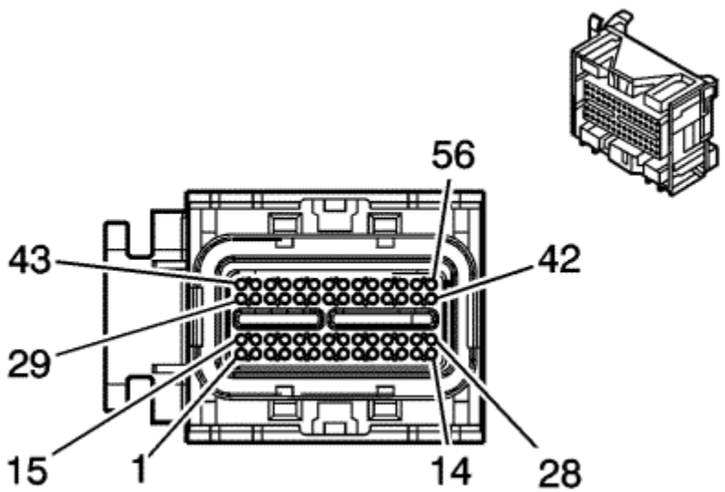

Connector Part Information

Harness Type: Engine
OEM Connector: 34576-0703
Service Connector: 88988373
Description: 56-Way F MX123 34576 Series (BK with BU Terminal Position Assurance Lock)

Terminal Part Information

Terminated Lead: 13575575
Release Tool: J-38125-213
Diagnostic Test Probe: J-35616-64B (L-BU)

K20 Engine Control Module X1

Pin	Size	Colour	Circuit	Function	Option
1	0.5	L-BU/BK	7493	High Speed GMLAN Serial Data (+)(3)	-
2	0.5	L-GN/WH	1162	Accelerator Pedal Position Signal (2)	--
3	0.5	L-GN/WH	492	Mass Air Flow Sensor Signal	-
4-9	--	--	--	Not Used	--

10	0.5	YE/WH	1161	Accelerator Pedal Position Signal (1)	-
11	--	--	--	Not Used	--
12	0.5	L-GN	380	A/C Refrigerant Pressure Sensor Signal	-
13	0.5	BK/BN	5514	Low Reference	-
14	--	--	--	Not Used	--
15	0.5	WH	7494	High Speed GMLAN Serial Data (-)(3)	-
16	0.5	BN/RD	1274	5 Volt Reference	--
17	--	--	--	Not Used	--
18	0.5	L-BU/WH	3977	Accessory Wake-up Serial Data 2	--
19	0.5	VT/WH	239	Run/Crank Ignition 1 Voltage	-
20	0.75	RD/BN	440	Battery Positive Voltage	-
21-23	--	--	--	Not Used	--
24	0.5	WH/RD	1164	5 Volt Reference	--
25	--	--	--	Not Used	--
26	0.5	BN/RD	2700	5 Volt Reference	-
27	--	--	--	Not Used	--
28	0.5	L-GN/GY	465	Fuel Pump Primary Relay Control	--
29	0.5	L-BU	2500	High Speed GMLAN Serial Data (+) (1)	-
30	0.5	BK/VT	1272	Low Reference	--
31	0.5	BK/VT	2760	Low Reference	-
32	0.5	BK/L-BU	6813	Low Reference	--
33	0.5	WH/L-BU	6311	Cruise/ETC/TCC Brake Signal	-
34-37	--	--	--	Not Used	--
38	0.5	BK/L-BU	1271	Low Reference	-
39	--	--	--	Not Used	--
40	0.5	WH	5148	Engine Main Relay Control	--
41	0.5	L-BU/VT	2364	Cooling Fan Speed Signal	-
42	--	--	--	Not Used	--
43	0.5	WH	2501	High Speed GMLAN Serial Data (-) (1)	-
44	--	--	--	Not Used	--
45	0.5	WH/L-BU	6289	Induction Air Temperature Sensor Signal	--
46	0.5	YE/BK	3000	Coolant Temperature Sensor #2 Signal	-
47	--	--	--	Not Used	--
48	0.5	L-GN	6271	Crankshaft 60X Sensor Signal	--

49-51	--	--	--	Not Used	--
52	0.5	BN/WH	419	Check Engine Indicator Control	-
53-56	--	--	--	Not Used	--

© Copyright Chevrolet. All rights reserved

K20 Engine Control Module X2

Connector Part Information

Harness Type: Engine
OEM Connector: 34566-0103
Service Connector: 88988931
Description: 73-Way F MX123 34566 Series (BK with BK Terminal Position Assurance Lock)

Terminal Part Information

Pins: 1-5, 10, 11, 14-17, 20, 21, 24, 28-31, 33, 35-37, 40, 43, 44, 47, 49, 53, 56, 57, 60, 63, 65, 67, 69, 72
Terminated Lead: 13575575
Release Tool: J-38125-213
Diagnostic Test Probe: J-35616-64B (L-BU)

Pins: 73
Terminated Lead: 13576392
Release Tool: J-38125-11A
Diagnostic Test Probe: J-35616-35 (VT)

K20 Engine Control Module X2

Pin	Size	Colour	Circuit	Function	Option
1	0.5	VT/L-BU	2121	Ignition Control (1)	-
2	0.5	BN/VT	1744	Fuel Injector Control (1)	--
3	0.5	BN/VT	1746	Fuel Injector Control (3)	--
4	0.5	BN/YE	844	Fuel Injector Control (4)	-
5	0.5	YE/WH	1745	Fuel Injector Control (2)	--
6-9	--	--	--	Not Used	--
10	0.5	GY/L-BU	5282	Camshaft Phaser Exhaust Solenoid (1)	--
11	0.5	VT/BN	5284	Camshaft Phaser Intake Solenoid (1)	-
12-13	--	--	--	Not Used	--
14	0.5	L-BU	6814	Thermostat Engine Cool Control	--
15	0.5	YE	581	Throttle Actuator Control Open	-

16	0.5	BN/WH	582	Throttle Actuator Control Close	--
17	0.5	L-GN/L-BU	2123	Ignition Control (3)	-
18-19	--	--	--	Not Used	--
20	0.5	BK/VT	6272	Low Reference	--
21	0.5	BK/GY	5296	Low Reference	-
22-23	--	--	--	Not Used	--
24	0.5	BK/L-GN	5301	Low Reference	-
25-27	--	--	--	Not Used	--
28	0.75	VT/L-BU	5290	Powertrain Main Relay Fused Supply (1)	-
29	0.5	BK/BN	6753	Low Reference	-
30	0.5	BK/VT	6754	Low Reference	-
31	0.75	YE/L-BU	231	Oil Pressure Switch Signal	-
32	--	--	--	Not Used	--
33	0.5	YE/L-BU	2124	Ignition Control (4)	-
34	--	--	--	Not Used	--
35	0.5	BK/GY	453	Low Reference	--
36	0.5	VT/L-BU	6270	Crankshaft 60X Sensor Voltage	-
37	0.5	GY/YE	5297	Camshaft Position Exhaust Sensor Supply Voltage (1)	-
38-39	--	--	--	Not Used	--
40	0.5	GY/L-BU	5300	Camshaft Position Intake Sensor Supply Voltage (1)	-
41-42	--	--	--	Not Used	--
43	0.5	BN/RD	2701	5 Volt Reference	-
44	0.5	BK/BN	2752	Low Reference	-
45-46	--	--	--	Not Used	--
47	0.5	VT/GY	3110	Heated Oxygen Sensor High Signal Bank 1 Sensor (1)	--
48	--	--	--	Not Used	-
49	0.5	BK/YE	1716	Low Reference	-
50-52	--	--	--	Not Used	--
53	0.5	L-BU/WH	2122	Ignition Control (2)	--
54-55	--	--	--	Not Used	--
56	0.5	L-GN	6271	Crankshaft 60X Sensor Signal	-
57	0.5	VT/BK	5273	Camshaft Position Exhaust Sensor (1)	-
56-59	--	--	--	Not Used	--
60	0.5	YE/VT	5275	Camshaft Position Intake Sensor (1)	-

61-62	--	--	--	Not Used	--
63	0.5	BN/L-GN	485	Throttle Position Sensor Signal (1)	-
64	--	--	--	Not Used	--
65	0.5	BN/L-BU	486	Throttle Position Sensor Signal (2)	-
66	--	--	--	Not Used	--
67	0.5	WH/BK	3111	Heated Oxygen Sensor Low Signal Bank 1 Sensor (1)	-
68	--	--	--	Not Used	--
69	0.5	VT/GY	496	Knock Sensor Signal (1)	-
70-71	--	--	--	Not Used	--
72	0.5	GY/WH	3113	Heated Oxygen Sensor Heater Low Control Bank 1 Sensor (1)	-
73	2	BK	250	Ground	-

© Copyright Chevrolet. All rights reserved

K20 Engine Control Module X3

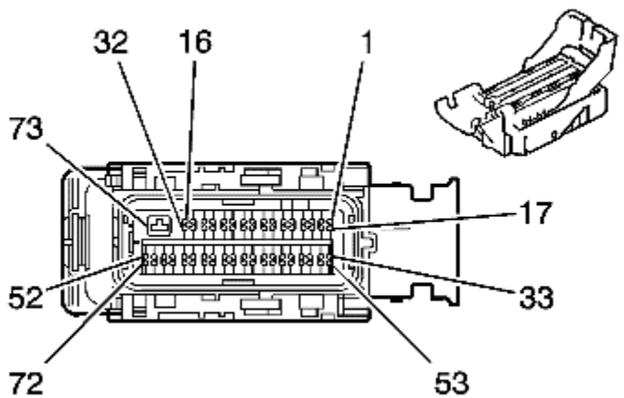

Connector Part Information

Harness Type: Engine
OEM Connector: 34566-0203
Service Connector: 88988372
Description: 73-Way F MX123 34566 Series (BK with GY Terminal Position Assurance Lock)

Terminal Part Information

Pins: 3-6, 10, 21, 27-30, 32, 34, 37, 39, 43, 45, 46, 57, 59, 63, 64, 67, 68
Terminated Lead: 13575575
Release Tool: J-38125-213
Diagnostic Test Probe: J-35616-64B (L-BU)

Pins: 73
Terminated Lead: 13576392
Release Tool: J-38125-11A
Diagnostic Test Probe: J-35616-35 (VT)

K20 Engine Control Module X3

Pin	Size	Colour	Circuit	Function	Option
1-2	--	--	--	Not Used	--

3	0.5	L-BU	3722	Evaporative Emission System Leak Detection Pump Assembly Vacuum Pump Earth	-
4	0.5	GY	3723	Evaporative Emission System Leak Detection Pump Assembly Change-over Valve Earth	--
5	0.5	L-GN	3726	Evaporative Emission Vent Solenoid Valve Earth	--
6	0.5	YE/L-BU	5494	Cylinder Shut-off Solenoid Control (4)	-
7-9	--	--	--	Not Used	--
10	0.5	L-GN/L-BU	428	EVAP Canister Purge Solenoid Control	-
11-26	--	--	--	Not Used	--
27	0.5	BK/L-GN	6281	Low Reference	-
28	0.5	GY/RD	2704	5 Volt Reference	-
29	0.5	BK/L-GN	469	Low Reference	-
30	0.5	BK/BN	2761	Low Reference	-
31	--	--	--	Not Used	--
32	0.5	GY/WH	3122	Heated Oxygen Sensor Heater Low Control Bank 1 Sensor (2)	-
33	--	--	--	Not Used	--
34	0.5	WH	1579	Fuel Temperature/Composition Signal (Not Used - E85)	-
35-38	--	--	--	Not Used	--
39	0.5	BN/RD	3724	Evaporative Emission System Leak Detection Pump Assembly Pressure Sensor Voltage Reference	-
40-42	--	--	--	Not Used	--
43	0.5	YE/RD	2709	5 Volt Reference	--
44	--	--	--	Not Used	--
45	0.5	L-GN/WH	432	Manifold Absolute Pressure Sensor Signal	-
46	0.5	L-BU	410	Engine Coolant Temperature Sensor Signal	-
47-58	--	--	--	Not Used	--
59	0.5	L-BU/L-GN	3725	Evaporative Emission System Leak Detection Pump Assembly Pressure Sensor Signal	-
60-62	--	--	--	Not Used	--
63	0.5	L-BU/WH	890	Fuel Tank Pressure Sensor Signal	-
64	0.5	L-BU/VT	1589	Primary Fuel Level Sensor Signal	-
65-66	--	--	--	Not Used	--
67	0.5	WH/YE	3121	Heated Oxygen Sensor Low Signal Bank 1 Sensor (2)	-
68	0.5	VT/L-BU	3120	Heated Oxygen Sensor High Signal Bank 1 Sensor (2)	--
67-72	--	--	--	Not Used	--
73	2.0	BK/L-BU	--	Not Used	--

© Copyright Chevrolet. All rights reserved

K27 Fuel Pump Control Module

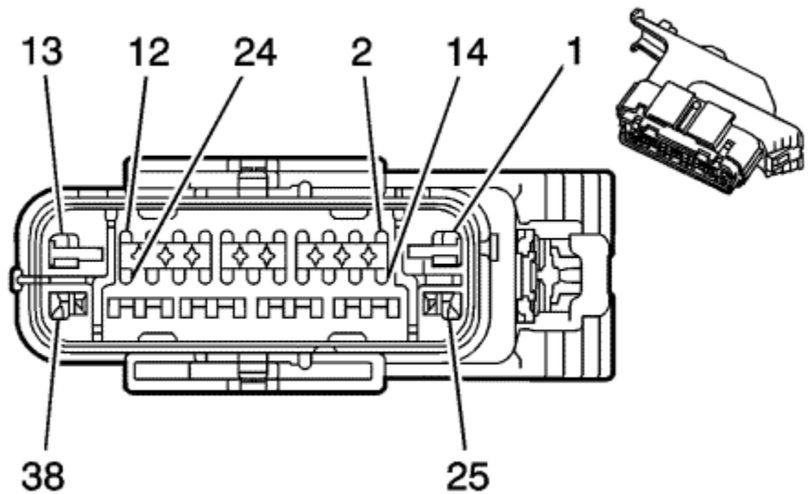

Connector Part Information

Harness Type: Body
OEM Connector: 31381-1000
Service Connector: 19178089
Description: 38-Way F 2.8 Series, Sealed (BK)

Terminal Part Information

Pins: 1, 25
Terminated Lead: 13575405
Release Tool: J-38125-553
Diagnostic Test Probe: J-35616-4A (PU)

Pins: 5, 6, 8, 10, 17, 18, 20-24
Terminated Lead: Pending
Release Tool: J-38125-215A
Diagnostic Test Probe: J-35616-64B (L-BU)

Pins: 13, 38
Terminated Lead: 13575392
Release Tool: J-38125-553
Diagnostic Test Probe: J-35616-4A (PU)

K27 Fuel Pump Control Module

Pin	Size	Colour	Circuit	Function	Option
1	1	RD/L-GN	1540	Battery Positive Voltage	--
2-4	--	--	--	Not Used	--
5	0.5	L-BU	2500	High Speed GMLAN Serial Data (+) (1)	-
6	0.5	L-BU	2500	High Speed GMLAN Serial Data (+) (1)	-
7	--	--	--	Not Used	--
8	0.5	WH/L-BU	5986	Serial Data Communication Enable	-
9	--	--	--	Not Used	--
10	0.35	L-BU/WH	7446	Fuel Line Pressure Sensor Signal	-
11-12	--	--	--	Not Used	--
13	2	GY	120	Fuel Pump Supply Voltage	-
14-16	--	--	--	Not Used	--
17	0.5	WH	2501	High Speed GMLAN Serial Data (-) (1)	-
18	0.5	WH	2501	High Speed GMLAN Serial Data (-) (1)	-
19	--	--	--	Not Used	--
20	0.35	L-GN/GY	465	Fuel Pump Primary Relay Control	--
21	0.5	VT/WH	639	Run/Crank Ignition 1 Voltage	-
22	0.35	BN/RD	7445	5 Volt Reference	--
23	0.35	BK/YE	7447	Low Reference	--
24	0.5	L-BU	7443	Fuel System Control Module Shield Extension	--
25	1	BK	850	Ground	--
26-37	--	--	--	Not Used	--
38	2	BK/L-GN	1580	Low Reference	-

© Copyright Chevrolet. All rights reserved

K29 Seat Heating Control Module X1

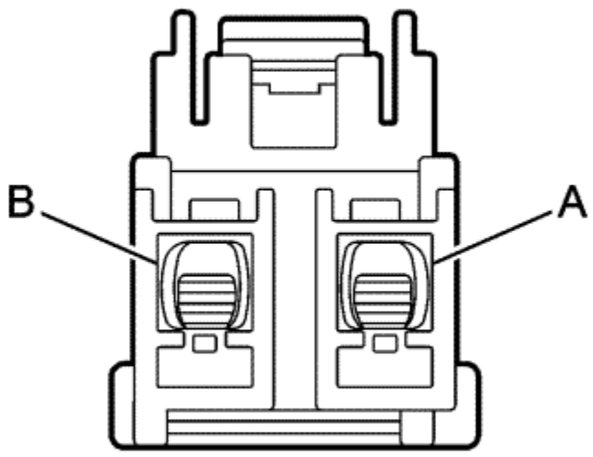

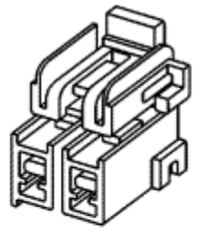

Connector Part Information

Harness Type: Driver Seat
OEM Connector: 13527997
Service Connector: Service by Harness - See Part Catalog
Description: 2-Way F Metri-Pack 280 Series (BK)

Terminal Part Information

Terminated Lead: 13579957
Release Tool: J-38125-553
Diagnostic Test Probe: J-35616-4A (PU)

K29 Seat Heating Control Module X1

Pin	Size	Colour	Circuit	Function	Option
A	1.0	BK	1550	Ground	--
B	1.0	RD	40	Battery Voltage	-

© Copyright Chevrolet. All rights reserved

K29 Seat Heating Control Module X2

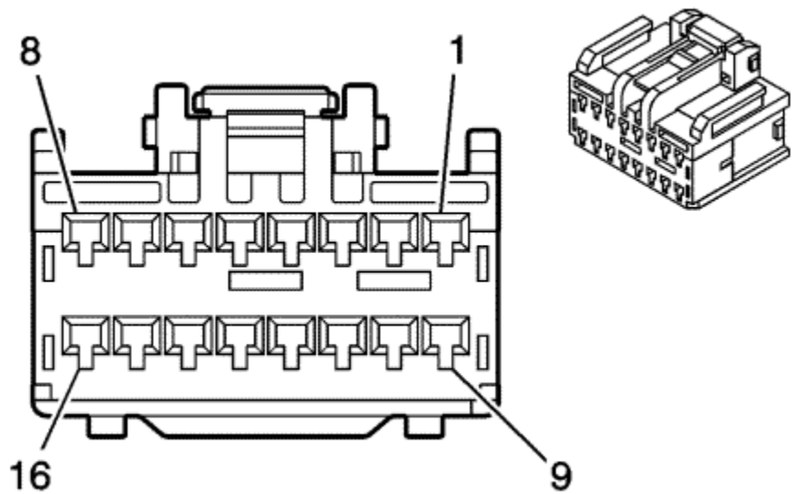

Connector Part Information

Harness Type: Driver Seat
OEM Connector: 6098-4611
Service Connector: 15134091
Description: 16-Way F 1.5 Series (BK)

Terminal Part Information

Pins: 1-3, 5
Terminated Lead: 13575580
Release Tool: J-38125-553
Diagnostic Test Probe: J-35616-2A (GY)
Pins: 13, 14
Terminated Lead: 13575579
Release Tool: J-38125-553
Diagnostic Test Probe: J-35616-2A (GY)

K29 Seat Heating Control Module X2

Pin	Size	Colour	Circuit	Function	Option

1	0.8	VT	2424	Driver Heated Back Element Return	-
2	0.8	L-BU	2433	Passenger Heated Back Element Return	--
3	0.8	PK	2077	Driver Heated Seat Element Supply Voltage	--
4	--	--	--	Not Used	--
5	0.8	D-BU	2479	Passenger Heated Seat Element Supply Voltage	-
6-12	--	--	--	Not Used	--
13	0.5	YE	2080	Driver Heated Seat NTC Low Reference	-
14	0.35	PK	2435	Passenger Heated Seat NTC Low Reference	-
15-16	--	--	--	Not Used	--

© Copyright Chevrolet. All rights reserved

K29 Seat Heating Control Module X3

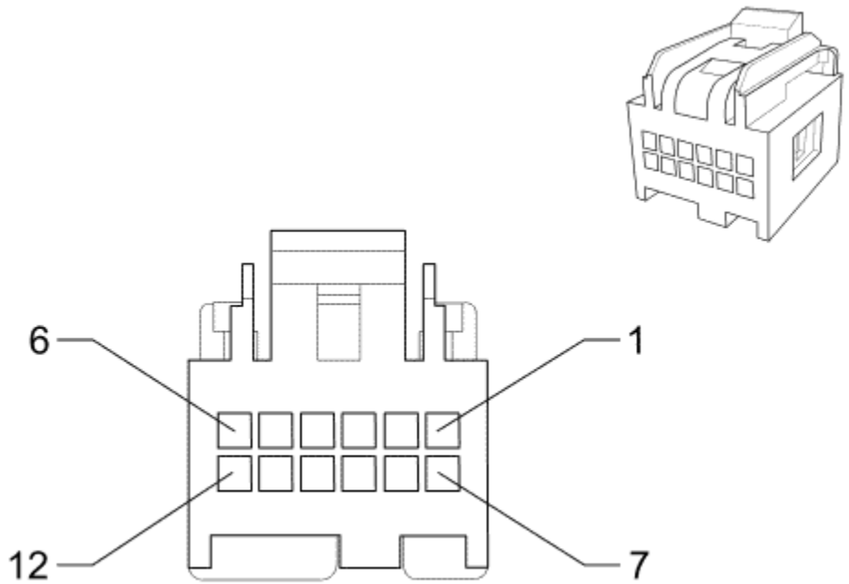

Connector Part Information

Harness Type: Driver Seat
OEM Connector: 31410-1120
Service Connector: 89047364
Description: 12-Way F 64 Series, Sealed (BK)

Terminal Part Information

Terminated Lead: 13575845
Release Tool: J-38125-215A
Diagnostic Test Probe: J-35616-64B (L-BU)

K29 Seat Heating Control Module X3

Pin	Size	Colour	Circuit	Function	Option
1-2	--	--	--	Not Used	--

3	0.5	YE/BK	2079	Driver Heated Seat NTC Signal	-
4	0.35	GY	2434	Passenger Heated Seat NTC Signal	-
5-10	--	--	--	Not Used	--
11	0.35	D-GN	5060	Low Speed GMLAN Serial Data	-
12	--	--	--	Not Used	--

© Copyright Chevrolet. All rights reserved

K33 HVAC Control Module X1

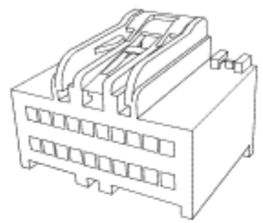

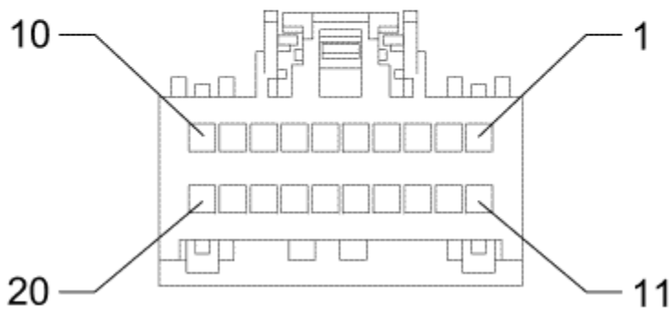

Connector Part Information

Harness Type: Instrument Panel
OEM Connector: 31410-1203
Service Connector: 13576644
Description: 20-Way F USCAR 64 Series (GN)

Terminal Part Information

Terminated Lead: 13575845
Release Tool: J-38125-215A
Diagnostic Test Probe: J-35616-64B (L-BU)

K33 HVAC Control Module X1

Pin	Size	Colour	Circuit	Function	Option
1	--	--	--	Not Used	--

2	0.5	GY/L-GN	7565	Windscreen Temp Sensor Signal	--
3	--	--	--	Not Used	--
4	0.5	L-BU/WH	734	Inside Air Temperature Sensor Signal	-
5	0.5	YE/L-BU	3197	Humidity Temperature Sensor Signal	—
6	0.5	YE/RD	597	5 Volt Reference	--
7	0.5	BK/BN	6102	Low Reference	-
8-11	--	--	--	Not Used	--
12	0.5	GY/L-BU	7564	Humidity Sensor Signal	-
13	--	--	--	Not Used	--
14	0.5	YE/VT	1783	Twilight Sentinel Delay Signal	--
15-17	--	--	--	Not Used	--
18	0.75	BN	518	Lower Left Air Temperature Sensor Signal	-
19	0.35	L-GN	36	Coolant Temperature Signal	-
20	--	--	--	Not Used	--

© Copyright Chevrolet. All rights reserved

K33 HVAC Control Module X2

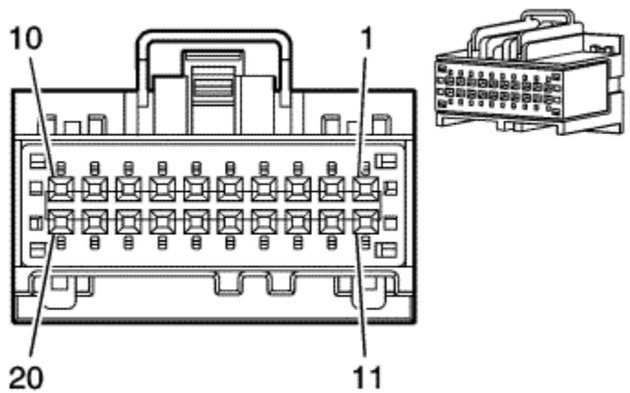

Connector Part Information

Harness Type: Instrument Panel
OEM Connector: 31410-1202
Service Connector: 15126709
Description: 20-Way F 64 Series, Sealed (BN)

Terminal Part Information

Terminated Lead: 13575845
Release Tool: J-38125-215A
Diagnostic Test Probe: J-35616-64B (L-BU)

K33 HVAC Control Module X2

Pin	Size	Colour	Circuit	Function	Option
1	0.5	RD/L-GN	742	Battery Positive Voltage	-
2	0.5	L-GN	5060	Low Speed GMLAN Serial Data	--
3	--	--	--	Not Used	--
4	0.5	L-GN/YE	7531	Linear Interconnect Network Bus 9	-
5-6	--	--	--	Not Used	--
7	0.35	VT/YE	3854	Cabin Heater Coolant Motor Control	--

8	0.5	BK	1650	Ground	-
9	0.35	VT/BN	41	Run Ignition 3 Voltage	-
10-11	--	--	--	Not Used	--
12	0.35	BN/L-BU	3852	Cabin Heater Coolant Motor Feedback Signal	-
13-14	--	--	--	Not Used	--
15	0.35	L-BU/GY	754	Blower Motor Speed Control	-
16-18	--	--	--	Not Used	--
19	0.5	BN/VT	193	Rear Demist Relay Control	-
20	0.35	L-GN/GY	3853	Cabin Heater Coolant Motor Enable	-

© Copyright Chevrolet. All rights reserved

K33 HVAC Control Module X3

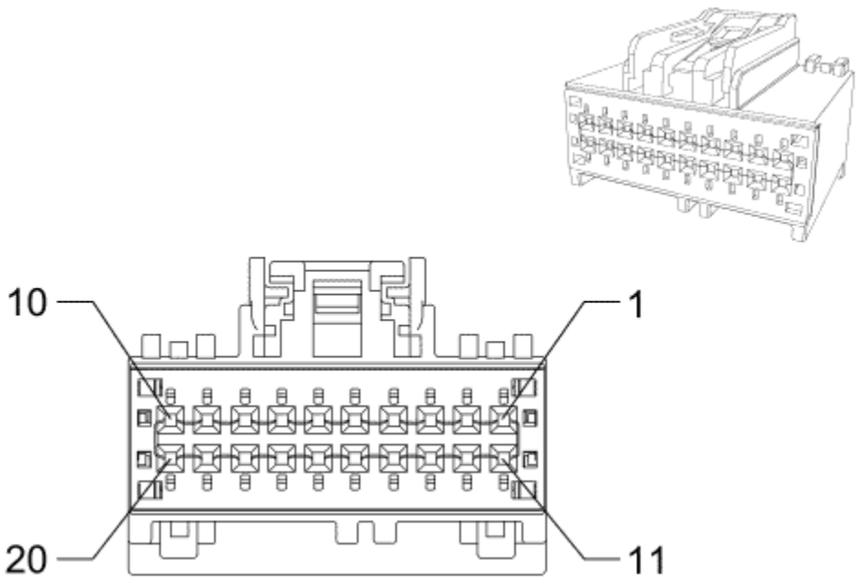

Connector Part Information

Harness: HVAC
OEM: 15489824
Service: 15126711
Description: 20-Way F 64 Series (BK)

Terminal Part Information

Terminated Lead: 13579945
Release Tool: J-38125-215A
Diagnostic Test Probe: J-35616-64B (L-BU)

K33 HVAC Control Module X3

Pin	Size	Colour	Circuit	Function	Option
1	0.35	GY/D-GN	516	Upper Left Air Temperature Sensor Signal	--

2	0.35	YE	3167	Mode Door Stepper Motor Control (3)	--
3	0.35	WH/RD	3165	Mode Door Stepper Motor Control (1)	-
4	0.35	GY/OG	3168	Mode Door Stepper Motor Control (4)	-
5	0.35	D-GN/WH	3166	Mode Door Stepper Motor Control (2)	-
6-8	--	--	--	Not Used	--
9	0.35	BK	6101	Air Temperature Sensor Common Low Reference	-
10	--	--	--	Not Used	--
11	0.35	D-GN	3169	Temp Door Stepper Motor Control (1)	-
12	0.35	WH/PK	3170	Temp Door Stepper Motor Control (2)	--
13	0.35	GY/RD	3171	Temp Door Stepper Motor Control (3)	-
14	0.35	RD/BK	3172	Temp Door Stepper Motor Control (4)	-
15	0.35	OG	7572	HVAC Motor Supply Voltage	--
16	0.35	GY	3173	Air Inlet Door Stepper Motor Control (1)	-
17	0.35	D-BU/WH	3174	Air Inlet Door Stepper Motor Control (2)	--
18	0.35	OG/D-GN	3175	Air Inlet Door Stepper Motor Control (3)	--
19	0.35	RD/D-GN	3176	Air Inlet Door Stepper Motor Control (4)	-
20	0.35	BK/GY	6137	EVAP Core Temperature Sensor Signal	-

© Copyright Chevrolet. All rights reserved

K35 Ignition Coil Module

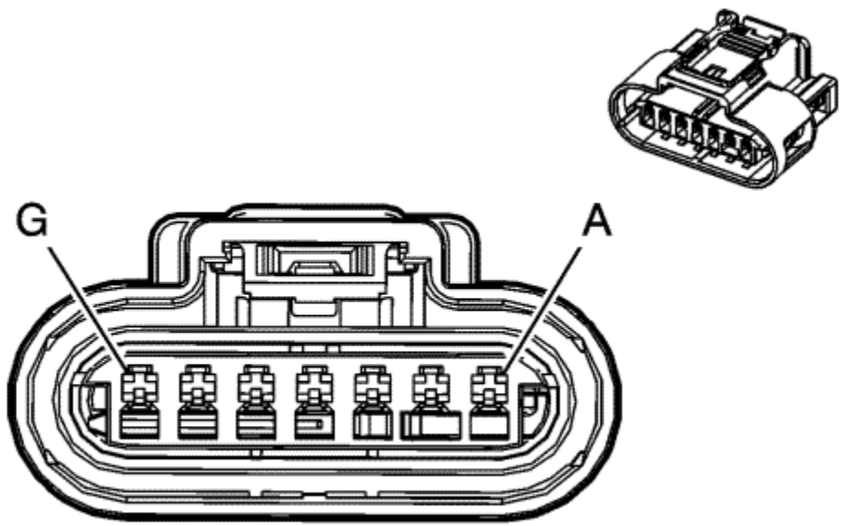

Connector Part Information

Harness Type: Engine
OEM Connector: PPI0000888
Service Connector: 13355825
Description: 7-Way F (BK)

Terminal Part Information

Terminated Lead: Service by Connector Assembly - 13355825
Release Tool: Pending
Diagnostic Test Probe: Pending

K35 Ignition Coil Module

Pin	Size	Colour	Circuit	Function	Option
A	1	VT/L-BU	5292	Powertrain Main Relay Fused Supply (3)	-
B	0.75	BK	150	Ground	-
C	0.5	BK/GY	453	Low Reference	--

D	0.5	L-BU/VT	2121	Ignition Control (1)	-
E	0.5	L-BU/WH	2122	Ignition Control (2)	--
F	0.5	L-GN/L-BU	2123	Ignition Control (3)	-
G	0.5	YE/L-BU	2124	Ignition Control (4)	-

© Copyright Chevrolet. All rights reserved

K36 Inflatable Restraint Sensing and Diagnostic Module X1

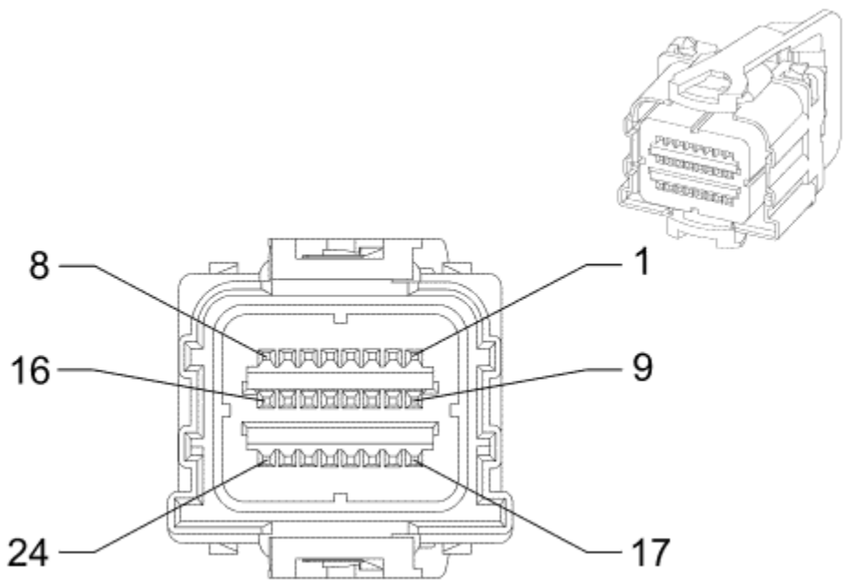

Connector Part Information

Harness Type: Instrument Panel
OEM Connector: 776773-1
Service Connector: 13576558
Description: 24-Way F Kaizen 0.64 Series, Sealed (YE)

Terminal Part Information

Terminated Lead: 13580076
Release Tool: Pending
Diagnostic Test Probe: Pending

K36 Inflatable Restraint Sensing and Diagnostic Module X1

Pin	Size	Colour	Circuit	Function	Option
1	0.75	OG/BK	3023	Steering Wheel Module Stage 2 High Control	--

2	0.75	WH/OG	3022	Steering Wheel Module Stage 2 Low Control	-
3	0.75	BN/OG	3020	Steering Wheel Module Stage 1 Low Control	-
4	0.75	OG/VT	3021	Steering Wheel Module Stage 1 High Control	--
5	0.75	YE/OG	3025	Passenger IP Module Stage 1 High Control	--
6	0.75	OG/WH	3024	Passenger IP Module Stage 1 Low Control	--
7	0.75	OG/VT	3026	Passenger IP Module Stage 2 Low Control	--
8	0.75	VT	3027	Passenger IP Module Stage 2 High Control	--
9	0.75	RD/BK	2440	Battery Positive Voltage	--
10	0.5	VT/WH	5234	Passenger Seat Belt Indicator	-
11	0.5	L-BU	2307	Passenger Air Bag On Indicator Control	-
12	0.5	L-GN	2308	Passenger Air Bag Off Indicator Control	-
13-14	--	--	--	Not Used	--
15	0.5	L-GN	5060	Low Speed GMLAN Serial Data	-
16	--	--	--	Not Used	--
17	0.75	VT/GY	2339	Run/Crank Ignition 1 Voltage	-
18	--	--	--	Not Used	--
19	0.75	BK	2450	Ground	-
20	--	--	--	Not Used	--
21	0.5	OG/BK	3078	Driver Knee Module High Control	-
22	0.5	GY/OG	3079	Driver Knee Module Low Control	-
23	0.5	WH/OG	3077	Passenger Knee Module Low Control	--
24	0.5	OG/BK	3076	Passenger Knee Module High Control	-

© Copyright Chevrolet. All rights reserved

K36 Inflatable Restraint Sensing and Diagnostic Module X2

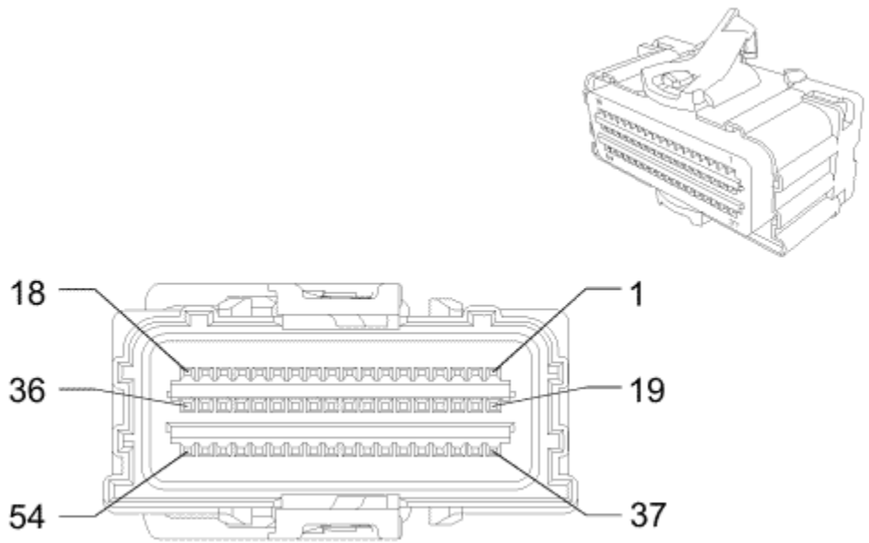

Connector Part Information

Harness Type: Body
OEM Connector: 2035023-4
Service Connector: 19257367
Description: 54-Way F 0.64 Series, Sealed (BK)

Terminal Part Information

Terminated Lead: 13580076
Release Tool: Pending
Diagnostic Test Probe: Pending

K36 Inflatable Restraint Sensing and Diagnostic Module X2

Pin	Size	Colour	Circuit	Function	Option
1-8	--	--	--	Not Used	--
9	0.5	OG/YE	3481	Driver Seat Belt Anchor Pretensioner High Control	--
10	0.5	YE/OG	3482	Driver Seat Belt Anchor Pretensioner Low Control	--

11	0.5	GY/OG	3480	Passenger Seat Belt Anchor Pretensioner Low Control	-
12	0.5	OG/BN	3479	Passenger Seat Belt Anchor Pretensioner High Control	-
13	0.5	OG/L-BU	3068	Driver Side Impact Module High Control	-
14	0.5	L-GN/OG	3069	Driver Side Impact Module Low Control	--
15	0.5	BN/OG	3067	Passenger Side Impact Module Low Control	-
16	0.5	OG/GY	3066	Passenger Side Impact Module High Control	--
17	0.5	OG/L-GN	5019	Left Front Head Curtain Module High Control	-
18	0.5	L-GN	5020	Left Front Head Curtain Module Low Control	-
19	0.5	L-GN/WH	2132	Left Front Side Impact Sensing Module Signal	-
20	0.5	L-GN	6628	Low Reference	--
21	0.5	BN/WH	6629	Low Reference	-
22	0.5	BN/OG	2134	Right Front Side Impact Sensing Module Signal	-
23	0.5	OG/YE	354	Left Front Discriminating Sensor Signal	-
24	0.5	BK/OG	5045	Low Reference	--
25	0.5	L-GN	5600	Low Reference	-
26	0.5	OG/L-GN	1409	Right Front Discriminating Sensor Signal	-
27	0.5	OG/L-BU	6620	Left Middle Side Impact Sensing Module Signal	-
28	0.5	L-BU	6621	Low Reference	-
29	0.5	BK/OG	6625	Low Reference	-
30	0.5	OG/VT	6624	Right Middle Side Impact Sensing Module Signal	--
31-32	--	--	--	Not Used	--
33-36	--	--	--	Not Available	-
37	0.5	OG/GY	3477	Driver Seat Belt Retractor Pretensioner High Control	--
38	0.5	WH	3478	Driver Seat Belt Retractor Pretensioner Low Control	--
39	0.5	L-GN	3476	Passenger Seat Belt Retractor Pretensioner Low Control	-
40	0.5	OG/L-GN	3475	Passenger Seat Belt Retractor Pretensioner High Control	--
41	0.5	OG/BN	238	Driver Seat Belt Switch Signal	-
42	--	--	--	Not Used	--
43	0.5	BK/OG	1363	Low Reference	-
44	0.5	BK/OG	1361	Low Reference	-
45	0.5	OG/VT	1362	Passenger Seat Belt Switch Signal	-
46-48	--	--	--	Not Used	-
49	0.5	YE/RD	5161	Left Rear Seat Belt Switch Signal	--
50	0.5	BN/WH	5162	Right Rear Seat Belt Switch Signal	-

51-52	--	--	--	Not Used	--
53	0.5	OG/GY	5021	Right Front Head Curtain Module High Control	--
54	0.5	WH	5022	Right Front Head Curtain Module Low Control	-

© Copyright Chevrolet. All rights reserved

K41 Parking Assist Control Module X1

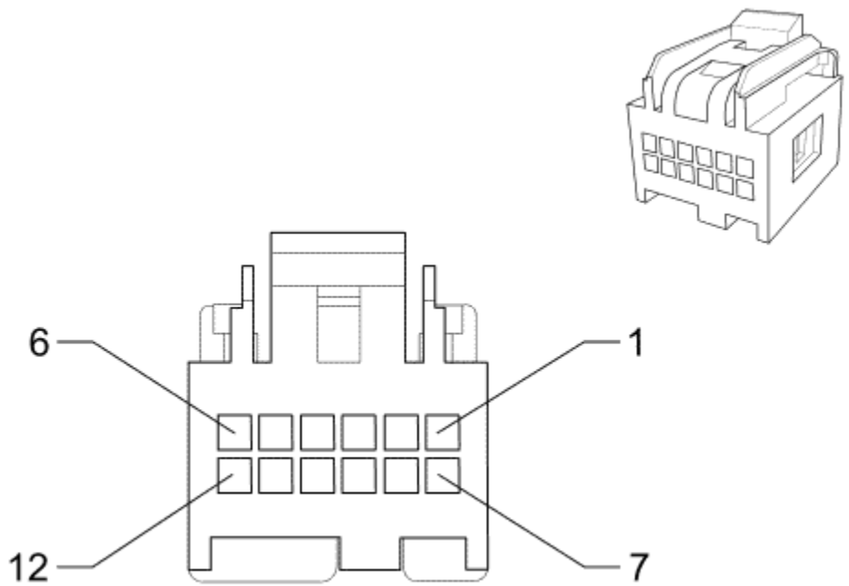

Connector Part Information

Harness Type: Body
OEM Connector: 31410-1120
Service Connector: 89047364
Description: 12-Way F 64 Series, Sealed (BK)

Terminal Part Information

Terminated Lead: 13575845
Release Tool: J-38125-215A
Diagnostic Test Probe: J-35616-64B (L-BU)

K41 Parking Assist Control Module X1

Pin	Size	Colour	Circuit	Function	Option
1	0.5	RD/GY	2840	Battery Positive Voltage	-

2	--	--	--	Not Used	--
3	0.35	L-GN/BN	5852	Rear Park Assist LED Disable Signal	-
4-5	--	--	--	Not Used	--
6	0.5	L-GN	5060	Low Speed GMLAN Serial Data	-
7	0.5	BK	1450	Ground	-
8	0.35	GY/L-GN	2555	Rear Park Assist Disable Signal	-
9-12	--	--	--	Not Used	-

© Copyright Chevrolet. All rights reserved

K41 Parking Assist Control Module X2

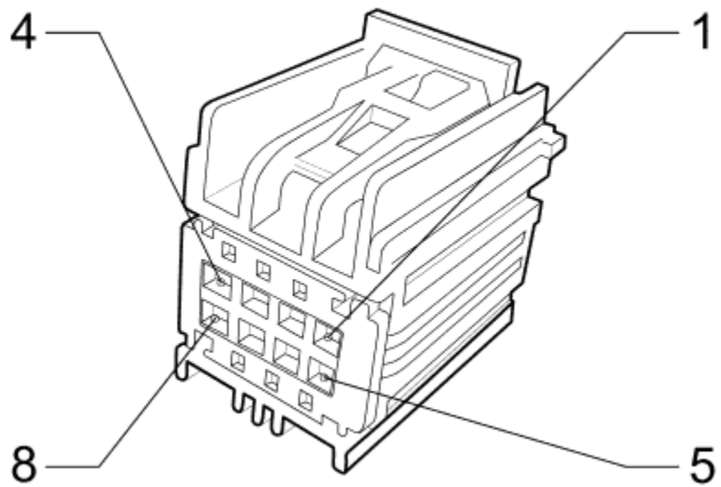

Connector Part Information

Harness Type: Body
OEM Connector: 7283-9029-40
Service Connector: 19115653
Description: 8-Way F YESC Kaizen Series (L-GY)

Terminal Part Information

Terminated Lead: 13575845
Release Tool: J-38125-215A
Diagnostic Test Probe: J-35616-64B (L-BU)

K41 Parking Assist Control Module X2

Pin	Size	Colour	Circuit	Function	Option
1	0.5	YE/VT	2378	Right Rear Corner Object Sensor Signal	-

2	0.5	YE/WH	2377	Right Rear Middle Object Sensor Signal	--
3	0.5	YE/L-BU	2376	Left Rear Middle Object Sensor Signal	-
4	0.5	RD/VT	5974	Park Assist Sensor Supply Voltage Park	—
5	0.5	YE	2375	Left Rear Corner Object Sensor Signal	-
6-7	--	--	--	Not Used	--
8	0.5	BK/GY	2379	Low Reference	-

© Copyright Chevrolet. All rights reserved

K41 Parking Assist Control Module X3

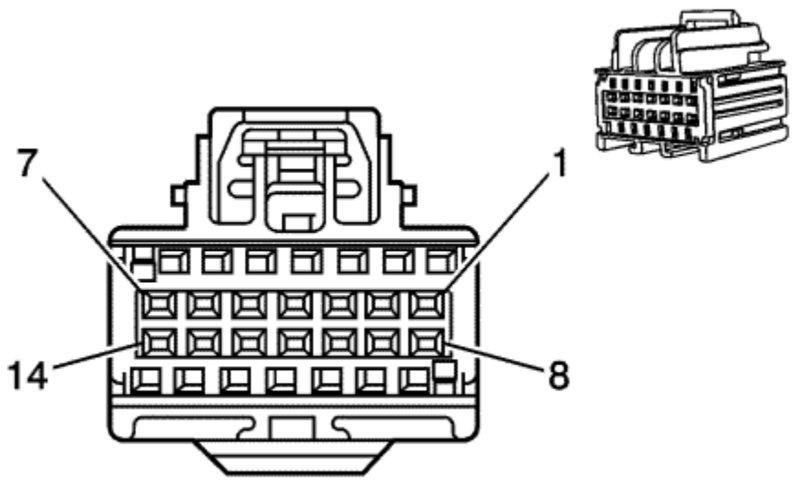

Connector Part Information

Harness Type: Body
OEM Connector: 7283-9068-90
Service Connector: 15127038
Description: 14-Way F (BU)

Terminal Part Information

Terminated Lead: 13575845
Release Tool: J-38125-215A
Diagnostic Test Probe: J-35616-64B (L-BU)

K41 Parking Assist Control Module X3

Pin	Size	Colour	Circuit	Function	Option
1	0.35	RD/L-BU	5974	Park Assist Sensor Supply Voltage Park	-
2-3	--	--	--	Not Used	--
4	0.35	VT/WH	5215	Front Parking Left Corner Sensor	-
5	0.35	YE/GY	5216	Front Parking Left Mid Sensor	-

6-7	--	--	--	Not Used	--
8	0.35	BK/L-BU	5214	Low Reference	-
9	--	--	--	Not Used	--
10	0.35	VT/GY	5218	Front Parking Right Mid Sensor	--
11	0.35	WH/GY	5217	Front Parking Right Corner Sensor	-
12-14	--	--	--	Not Used	--

© Copyright Chevrolet. All rights reserved

Underbody - Steering Components

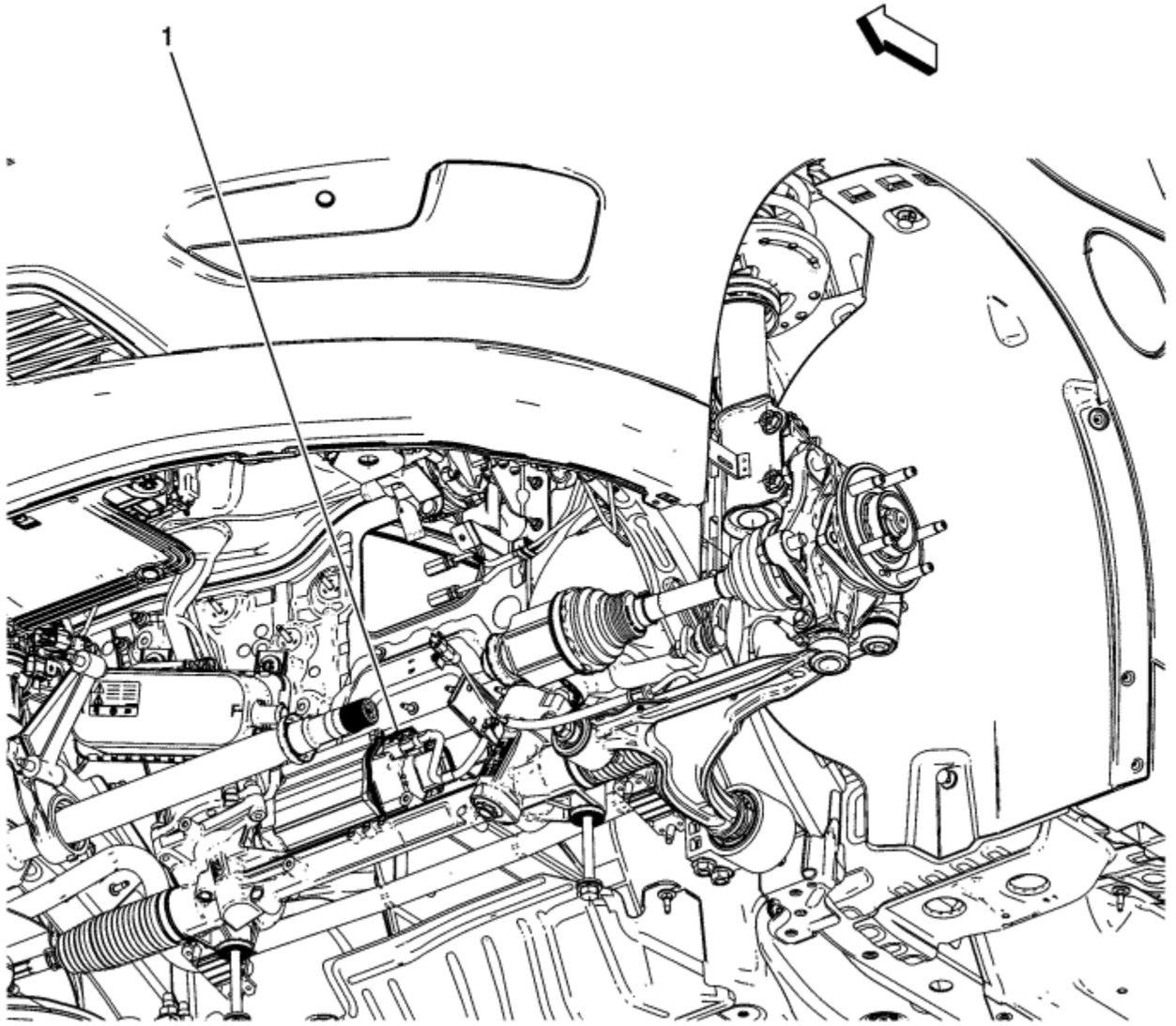

(1) K43 Power Steering Control Module

© Copyright Chevrolet. All rights reserved

K43 Power Steering Control Module X1

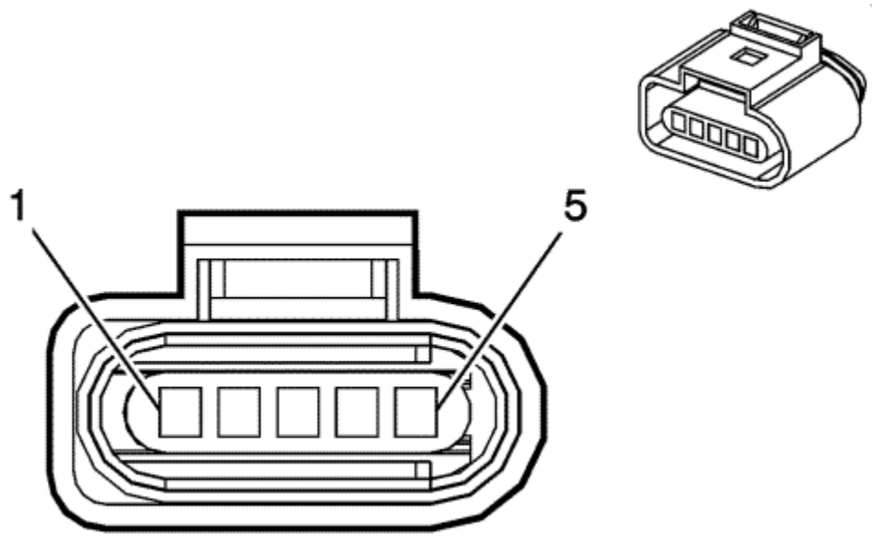

Connector Part Information

Harness Type: Engine
OEM Connector: 42123000
Service Connector: 13574906
Description: 5-Way F Micro II Timer Series, Sealed (BK)

Terminal Part Information

Terminated Lead: Service by Connector Assembly - Pending
Release Tool: J-38125-560
Diagnostic Test Probe: J-35616-14 (GN)

K43 Power Steering Control Module X1

Pin	Size	Colour	Circuit	Function	Option
1	0.5	WH/L-BU	5986	Serial Data Communication Enable	-
2	0.5	L-BU	2500	High Speed GMLAN Serial Data (+) (1)	--
3	0.5	L-BU	2500	High Speed GMLAN Serial Data (+) (1)	-

4	0.5	WH	2501	High Speed GMLAN Serial Data (-) (1)	-
5	0.5	WH	2501	High Speed GMLAN Serial Data (-) (1)	-

© Copyright Chevrolet. All rights reserved

K43 Power Steering Control Module X2

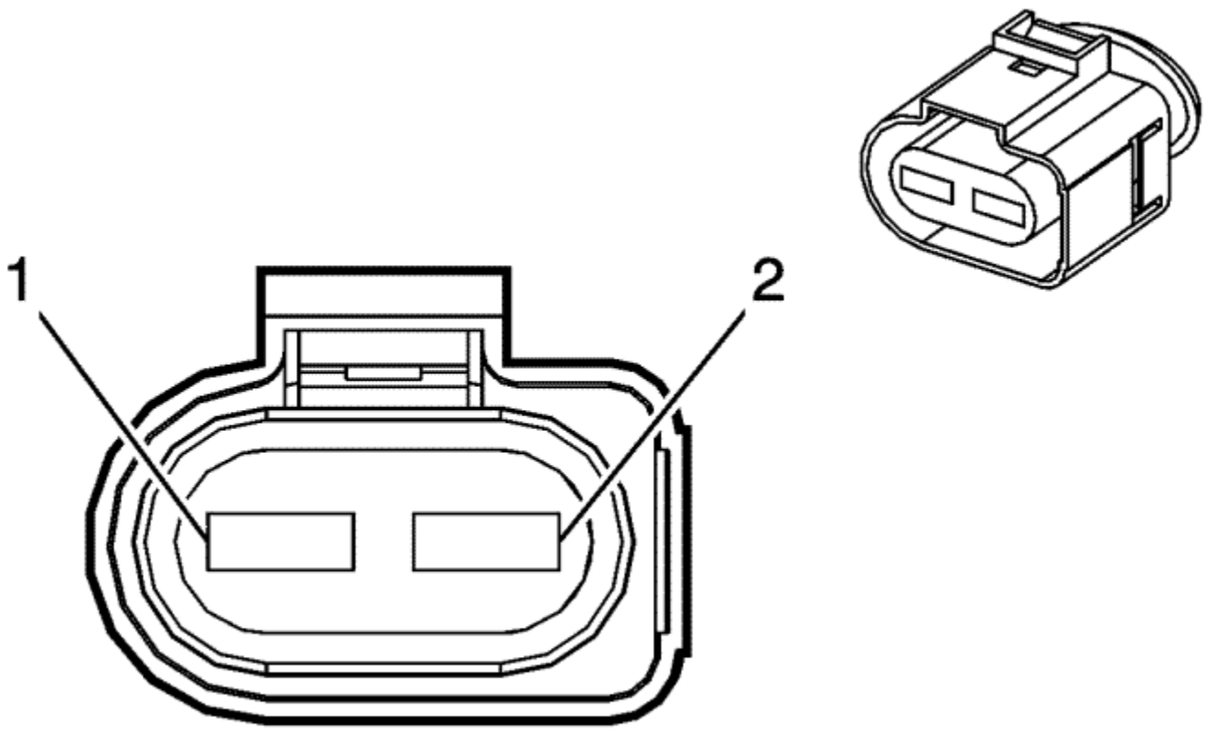

Connector Part Information

Harness Type: Engine
OEM Connector: 13663324
Service Connector: 13577532
Description: 2-Way F DUCON 9.5 Series, Sealed (BK)

Terminal Part Information

Terminated Lead: Service by Connector Assembly - Pending
Release Tool: J-38125-11A
Diagnostic Test Probe: J-35616-31 (OG)

K43 Power Steering Control Module X2

Pin	Size	Colour	Circuit	Function	Option
1	10	BK	350	Ground	-
2	10	RD/L-GN	242	Battery Positive Voltage	-

© Copyright Chevrolet. All rights reserved

K65 Tyre Pressure Indicator Module

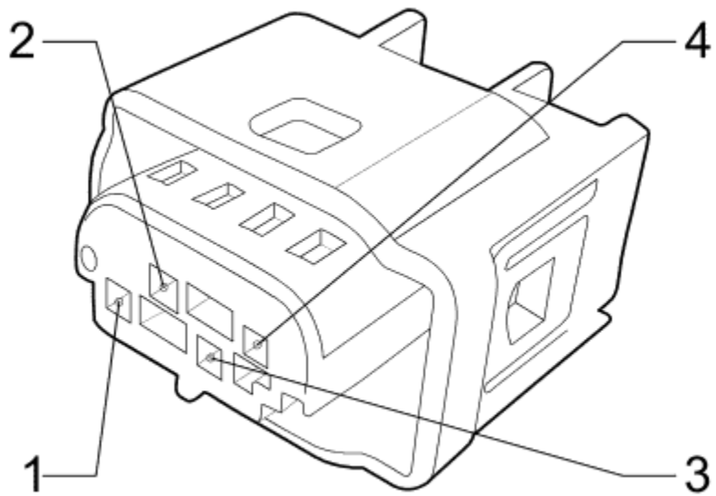

Connector Part Information

Harness Type: Body
OEM Connector: 90484986
Service Connector: 90484986
Description: 4-Way F 64 MQS Series (BK)

Terminal Part Information

Terminated Lead: Pending
Release Tool: Pending
Diagnostic Test Probe: Pending

K65 Tyre Pressure Indicator Module

Pin	Size	Colour	Circuit	Function	Option
1	0.35	BK	650	Ground	--

2	0.35	VT/L-GN	439	Ignition Voltage	--
3	0.35	L-GN/L-BU	6133	Linear Interconnect Network 3	--
4	--	--	--	Not Used	--

© Copyright Chevrolet. All rights reserved

K73 Telematics Communication Interface Module X1

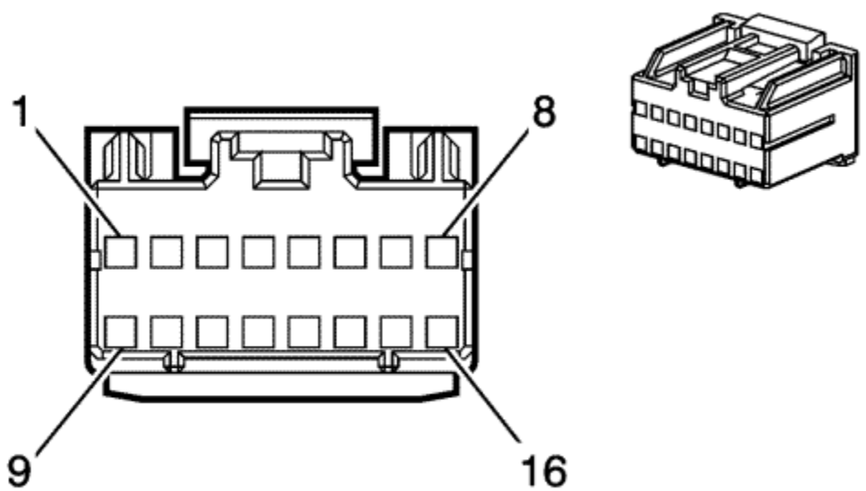

Connector Part Information

Harness Type: Instrument Panel
OEM Connector: 1456601-1
Service Connector: 13316208
Description: 16-Way F Multilock 040 II Series (WH)

Terminal Part Information

Pins: 1, 7, 10-12, 15
Terminated Lead: Pending
Release Tool: J-38125-559
Diagnostic Test Probe: J-35616-16 (L-GN)

Pins: 2, 3, 6
Terminated Lead: Pending
Release Tool: J-38125-553
Diagnostic Test Probe: J-35616-65B (L-BU)

K73 Telematics Communication Interface Module X1

Pin	Size	Colour	Circuit	Function	Option
1	0.5	L-GN	5060	Low Speed GMLAN Serial Data	--
2	0.35	BN/WH	2517	Keypad Red LED	--
3	0.35	YE/VT	2516	Keypad Green LED	-
4-5	--	--	--	Not Used	--
6	0.35	L-GN/BK	2515	Keypad Supply Voltage	-
7	0.5	BK	2050	Ground	--
8-9	--	--	--	Not Used	--
10	0.5	L-BU	2500	High Speed GMLAN Serial Data (+) (1)	--
11	0.35	L-GN/WH	2514	Keypad Signal	-
12	0.5	WH	2501	High Speed GMLAN Serial Data (-) (1)	-
13-14	--	--	--	Not Used	--
15	0.5	RD/VT	2640	Battery Positive Voltage	-
16	--	--	--	Not Used	--

© Copyright Chevrolet. All rights reserved

K73 Telematics Communication Interface Module X2

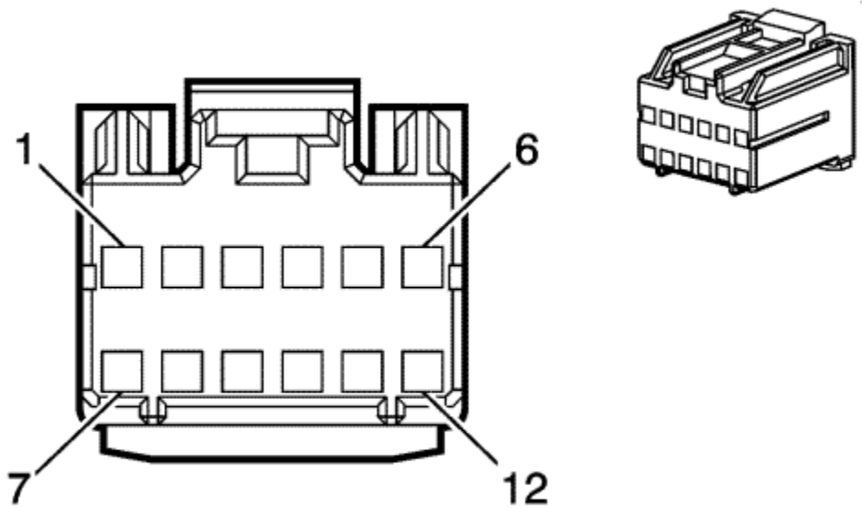

Connector Part Information

Harness Type: Instrument Panel
OEM Connector: 1456599-1
Service Connector: 13316194
Description: 12-Way F Multilock 040 II Series (WH)

Terminal Part Information

Terminated Lead: Pending
Release Tool: J-38125-559
Diagnostic Test Probe: J-35616-16 (L-GN)

K73 Telematics Communication Interface Module X2

Pin	Size	Colour	Circuit	Function	Option
1	0.5	YE	658	Mobile Telephone Voice Signal	-
2	0.5	BK/YE	659	Low Reference	--
3	0.5	L-BU	2500	High Speed GMLAN Serial Data (+) (1)	-

4	0.5	WH	2501	High Speed GMLAN Serial Data (-) (1)	-
5	0.5	BK	1792	Drain Wire	--
6	0.35	GY/YE	5149	Voice Recognition Audio Signal	--
7	0.35	WH/L-BU	5986	Serial Data Communication Enable	--
8	0.5	BK	1782	Drain Wire	-
9	0.35	L-BU	655	Mobile Telephone Microphone Signal	--
10	0.35	BK/BN	654	Low Reference	-
11	--	--	--	Not Used	--
12	0.35	BK/GY	5152	Low Reference	-

© Copyright Chevrolet. All rights reserved

K77 Remote Control Door Lock Receiver

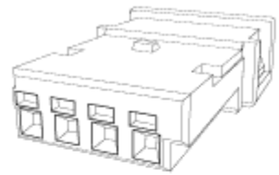

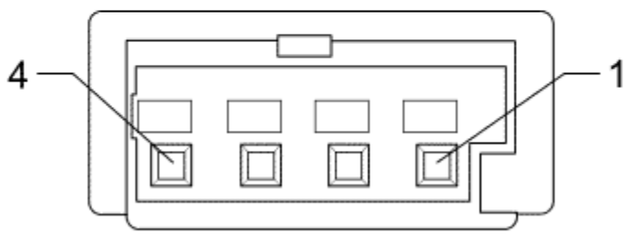

Connector Part Information

Harness Type: Headliner
OEM Connector: 968943-1
Service Connector: Pending
Description: 4-Way F 64 MQS Series (BK)

Terminal Part Information

Terminated Lead: Service by Connector Assembly - Pending
Release Tool: J-38125-12A
Diagnostic Test Probe: J-35616-64B (L-BU)

K77 Remote Control Door Lock Receiver

Pin	Size	Colour	Circuit	Function	Option
1	0.5	GY	3273	Remote Function Actuator Return	-

2	0.5	YE/L-GN	3274	Remote Function Actuator Transmit Signal	--
3	0.5	L-BU/WH	3275	Remote Function Actuator Receive Signal	-
4	0.5	GY/WH	3272	Remote Function Actuator Supply Voltage	-

© Copyright Chevrolet. All rights reserved

K83 Parking Brake Control Module

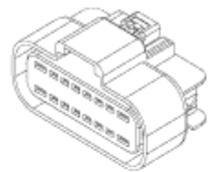

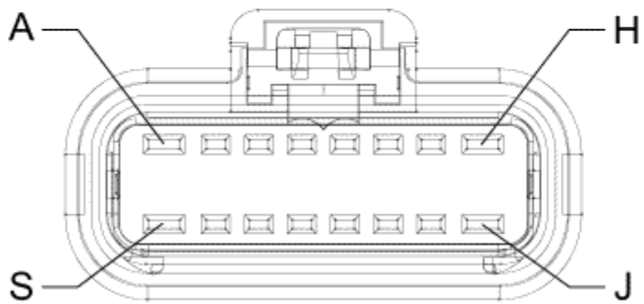

Connector Part Information

Harness Type: Body
OEM Connector: 15479301
Service Connector: 15306348
Description: 16-Way GT 150 280 (BK)

Terminal Part Information

Pins: A, H
Terminated Lead: 13575403
Release Tool: J-38125-553
Diagnostic Test Probe: J-35616-4A (PU)

Pins: B-G, K-R
Terminated Lead: Pins B-D, N and R - 13327112
Terminated Lead: Pins E-G, K-M and P - 13575413
Release Tool: J-38125-553
Diagnostic Test Probe: J-35616-2A (GY)

Pins: S
Terminated Lead: 13575406
Release Tool: J-38125-553
Diagnostic Test Probe: J-35616-4A (PU)

K83 Parking Brake Control Module

Pin	Size	Colour	Circuit	Function	Option
A	3	RD/L-BU	1842	Battery Positive Voltage	--
B	0.35	GY/BK	7683	Park Brake Release Switch Voltage Reference	-
C	0.35	L-BU/VT	1134	Park Brake Switch Signal	-
D	0.35	BN/WH	7684	Park Brake Apply Switch Voltage Reference	-
E	0.5	L-BU	2500	High Speed GMLAN Serial Data (+) (1)	-
F	0.5	L-BU	2500	High Speed GMLAN Serial Data (+) (1)	-
G	0.5	L-BU	2500	High Speed GMLAN Serial Data (+) (1)	-
H	3	BK	650	Ground	--
J	--	--	--	Not Used	--
K	0.5	WH	2501	High Speed GMLAN Serial Data (-) (1)	-
L	0.5	WH	2501	High Speed GMLAN Serial Data (-) (1)	-
M	0.5	WH	2501	High Speed GMLAN Serial Data (-) (1)	-
N	0.35	YE	1492	Park Brake Switch Supply Voltage	-
P	0.5	WH/L-BU	5986	Serial Data Communication Enable	-
R	0.35	BN	6107	Park Brake Apply Switch Signal	-
S	0.35	L-BU/BK	6108	Park Brake Release Switch Signal	-

© Copyright Chevrolet. All rights reserved

K84 Keyless Entry Control Module X1

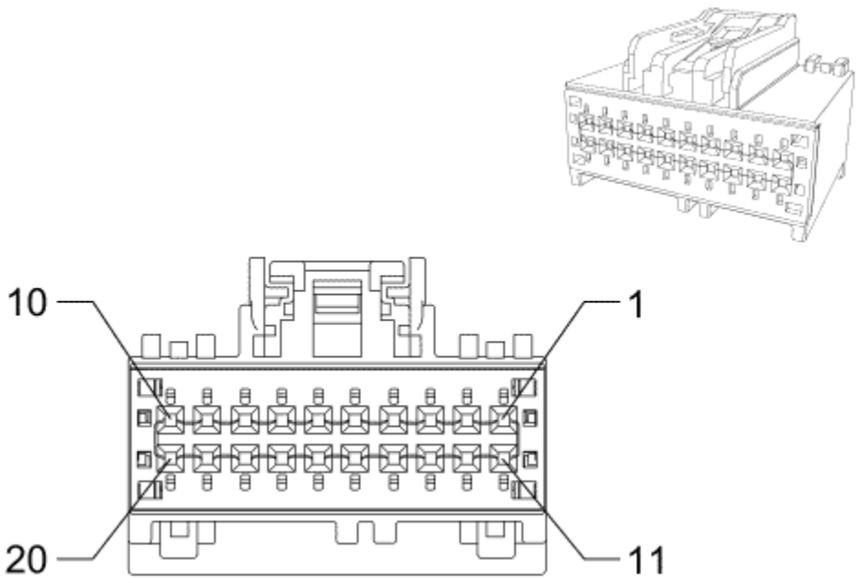

Connector Part Information

Harness Type: Body
OEM Connector: 31410-1200
Service Connector: 15126711
Description: 20-Way F 64 Series, Sealed (BK)

Terminal Part Information

Terminated Lead: 13575845
Release Tool: J-38125-215A
Diagnostic Test Probe: J-35616-64B (L-BU)

K84 Keyless Entry Control Module X1

Pin	Size	Colour	Circuit	Function	Option
1-2	--	--	--	Not Used	--

3	0.5	L-GN	5060	Low Speed GMLAN Serial Data	-
4-10	--	--	--	Not Used	--
11	0.35	L-GN/BK	3558	Passive Start Switch Signal 2	-
12	0.35	BK/GY	3559	Low Reference	-
13-14	--	--	--	Not Used	--
15	0.5	OG/L-BU	3555	Passive Start Interior Aerial 2 Signal Lo	-
16	0.5	BN/WH	3552	Passive Start Interior Aerial 1 Signal Hi	--
17	0.5	WH	3553	Passive Start Interior Aerial 1 Signal Lo	--
18	0.5	OG	3556	Passive Start Interior Aerial 3 Signal Hi	--
19	0.5	OG/L-BU	3557	Passive Start Interior Aerial 3 Signal Lo	--
20	0.5	OG	3554	Passive Start Interior Aerial 2 Signal Hi	-

© Copyright Chevrolet. All rights reserved

K84 Keyless Entry Control Module X2

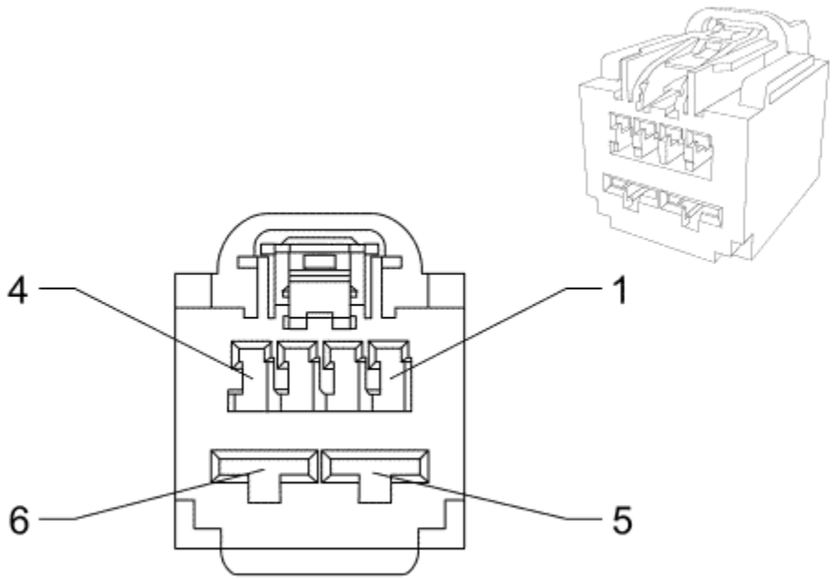

Connector Part Information

Harness Type: Body
OEM Connector: 7283-9749-30
Service Connector: 88988512
Description: 6-Way F YESC Kaizen Series (BK)

Terminal Part Information

Pins: 1-4
Terminated Lead: Service by Connector Assembly - 88988512
Release Tool: J-38125-553
Diagnostic Test Probe: J-35616-2A (GY)

Pins: 5, 6
Terminated Lead: Service by Connector Assembly - 88988512
Release Tool: J-38125-11A
Diagnostic Test Probe: J-35616-42 (RD)

K84 Keyless Entry Control Module X2

Pin	Size	Colour	Circuit	Function	Option
1	0.35	RD/WH	4042	Battery Positive Voltage	-
2	0.35	BK/BN	850	Ground	--
3	0.35	VT/YE	4	Accessory Voltage	--
4	0.35	VT/BK	3	Run/Crank Ignition 1 Voltage	--
5	0.5	RD/WH	4042	Battery Positive Voltage	--
6	0.5	BK	850	Ground	-

© Copyright Chevrolet. All rights reserved

K85 Passenger Presence Detection Module

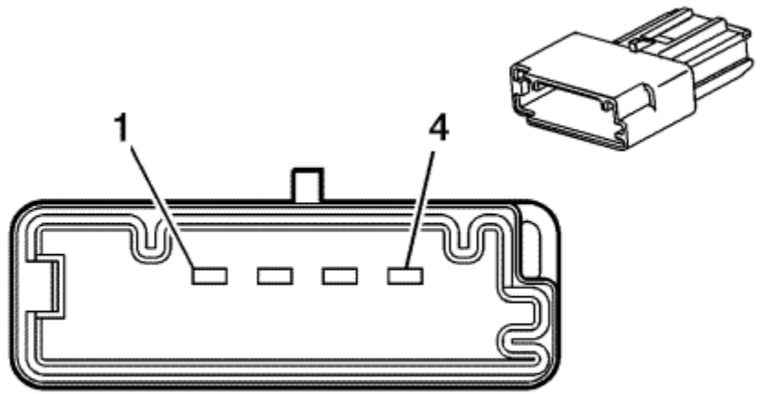

Connector Part Information

Harness Type: Passenger Seat
OEM Connector: 6098-5519
Service Connector: Service by Harness - See Part Catalog
Description: 4-Way M Low Profile 1.5 Series (BK)

Terminal Part Information

Terminated Lead: Service by Harness - See Part Catalog
Release Tool: J-38125-553
Diagnostic Test Probe: J-35616-3 (GY)

K85 Passenger Presence Detection Module

Pin	Size	Colour	Circuit	Function	Option
1	0.35	D-GN	5060	Low Speed GMLAN Serial Data	-
2	--	--	--	Not Used	--
3	0.5	RD	40	Battery Positive Voltage	-
4	0.35	BK	2050	Ground	-

© Copyright Chevrolet. All rights reserved

K89 Immobiliser Control Module

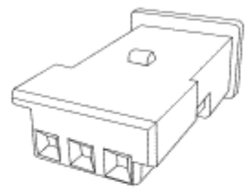

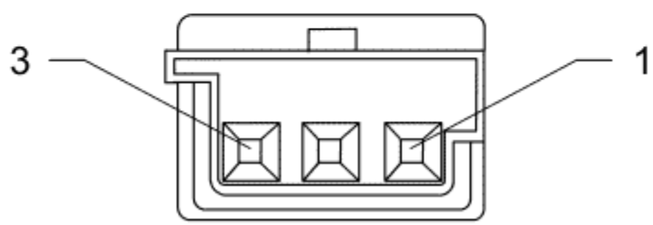

Connector Part Information

Harness Type: Instrument Panel
OEM Connector: 4-1718346-1
Service Connector: 13576530
Description: 3-Way F Micro Quadlok Series (PU)

Terminal Part Information

Terminated Lead: Service by Connector Assembly - 13576530
Release Tool: J-38125-12A
Diagnostic Test Probe: J-35616-64B (L-BU)

K89 Immobiliser Control Module

Pin	Size	Colour	Circuit	Function	Option
1	0.35	L-GN/GY	3277	Vehicle Anti-Theft System Immobiliser Return	-

2	0.35	L-GN/VT	7533	Linear Interconnect Network Bus 11	--
3	0.35	GY/BK	3276	Vehicle Anti-Theft System Immobiliser Supply Voltage	-

© Copyright Chevrolet. All rights reserved

K112A Hybrid/EV Battery Interface Control Module 1 X1

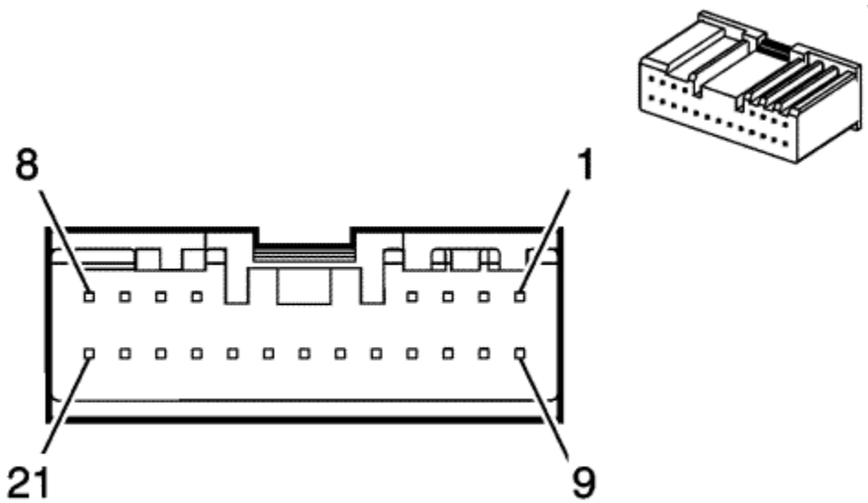

Connector Part Information

Harness Type: Hybrid Battery
OEM Connector: ATLPB-21-2AK
Service Connector: Service by Harness - See Part Catalog
Description: 21-Way F (BK)

Terminal Part Information

Terminated Lead: 13575867
Release Tool: J-38125-215A
Diagnostic Test Probe: J-35616-64B (L-BU)

K112A Hybrid/EV Battery Interface Control Module 1 X1

Pin	Size	Colour	Circuit	Function	Option
1-8	--	--	--	Not Used	--
9	0.5	GY/RD	705	5 Volt Reference	--
10	0.5	L-BU/YE	6434	CAN Bus High #2 Serial Data	--

11	0.5	WH/YE	6435	CAN Bus Low #2 Serial Data	-
12	0.5	BK/VT	470	Low Reference	-
13	0.5	L-BU	5139	High-Voltage Fault Signal	-
14	0.5	L-BU/GY	5139	High-Voltage Fault Signal	--
15	0.5	BK/VT	470	Low Reference	-
16	0.5	WH/YE	6435	CAN Bus Low #2 Serial Data	--
17	0.5	L-BU/YE	6434	CAN Bus High #2 Serial Data	--
18	0.5	GY/RD	705	5 Volt Reference	-
19-21	--	--	--	Not Used	--

© Copyright Chevrolet. All rights reserved

K112A Hybrid/EV Battery Interface Control Module 1 X2

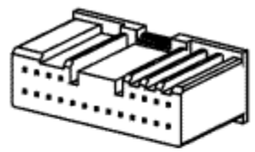

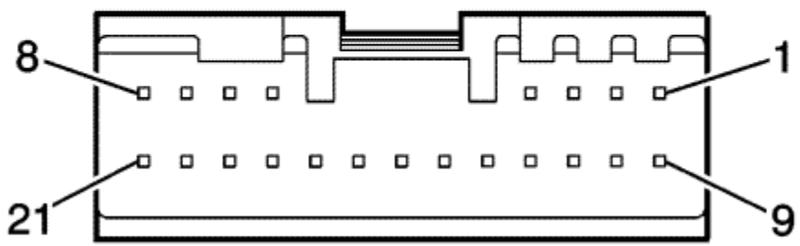

Connector Part Information

Harness Type: Hybrid Battery
OEM Connector: 13504010
Service Connector: Service by Harness - See Part Catalog
Description: 21-Way F (OG)

Terminal Part Information

Terminated Lead: 13575867
Release Tool: J-38125-215A
Diagnostic Test Probe: J-35616-64B (L-BU)

K112A Hybrid/EV Battery Interface Control Module 1 X2

Pin	Size	Colour	Circuit	Function	Option
1	0.35	BN/WH	5406	Battery Module Temperature Signal (13)	--
2	0.35	BK/L-BU	3774	Low Reference	--
3	0.35	BN	5405	Battery Module Temperature Signal (12)	-

4	0.35	BK/BN	3773	Low Reference	-
5-8	--	--	--	Not Used	--
9	0.35	BN	5571	Battery Voltage Signal (12)	--
10	0.35	L-GN/GY	5393	Battery Voltage Signal (11)	--
11	0.35	L-BU/GY	5392	Battery Voltage Signal (10)	-
12	0.35	L-GN/BK	5401	Battery Voltage Signal (9)	--
13	0.35	L-BU	5400	Battery Voltage Signal (8)	-
14	0.35	YE/BN	5399	Battery Voltage Signal (7)	-
15	0.35	L-GN	5398	Battery Voltage Signal (6)	--
16	0.35	YE/L-GN	5397	Battery Voltage Signal (5)	-
17	0.35	GY/YE	5396	Battery Voltage Signal (4)	--
18	0.35	WH	5395	Battery Voltage Signal (3)	--
19	0.35	YE/BN	5394	Battery Voltage Signal (2)	-
20	0.35	VT	5391	Battery Voltage Signal (1)	--
21	0.35	BK/VT	5403	Low Reference	-

© Copyright Chevrolet. All rights reserved

K112A Hybrid/EV Battery Interface Control Module 1 X3

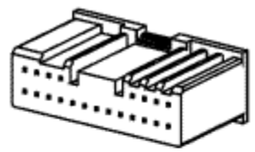

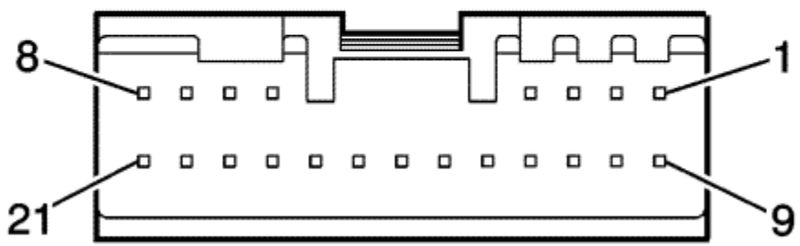

Connector Part Information

Harness Type: Hybrid Battery
OEM Connector: 13504010
Service Connector: Service by Harness - See Part Catalog
Description: 21-Way F (OG)

Terminal Part Information

Terminated Lead: 13575867
Release Tool: J-38125-215A
Diagnostic Test Probe: J-35616-64B (L-BU)

K112A Hybrid/EV Battery Interface Control Module 1 X3

Pin	Size	Colour	Circuit	Function	Option
1	0.35	BN/WH	5406	Battery Module Temperature Signal (15)	--
2	0.35	BK/L-BU	3774	Low Reference	--
3	0.35	BN	5405	Battery Module Temperature Signal (14)	-

4	0.35	BK/BN	3773	Low Reference	-
5-8	--	--	--	Not Used	--
9	0.35	BN	5571	Battery Voltage Signal (12)	--
10	0.35	L-GN/GY	5393	Battery Voltage Signal (11)	--
11	0.35	L-BU/GY	5392	Battery Voltage Signal (10)	-
12	0.35	L-GN/BK	5401	Battery Voltage Signal (9)	--
13	0.35	L-BU	5400	Battery Voltage Signal (8)	-
14	0.35	YE/BN	5399	Battery Voltage Signal (7)	-
15	0.35	L-GN	5398	Battery Voltage Signal (6)	--
16	0.35	YE/L-GN	5397	Battery Voltage Signal (5)	-
17	0.35	GY/YE	5396	Battery Voltage Signal (4)	--
18	0.35	WH	5395	Battery Voltage Signal (3)	--
19	0.35	YE/BN	5394	Battery Voltage Signal (2)	-
20	0.35	VT	5391	Battery Voltage Signal (1)	--
21	0.35	BK/VT	5403	Low Reference	-

© Copyright Chevrolet. All rights reserved

K112A Hybrid/EV Battery Interface Control Module 1 X4

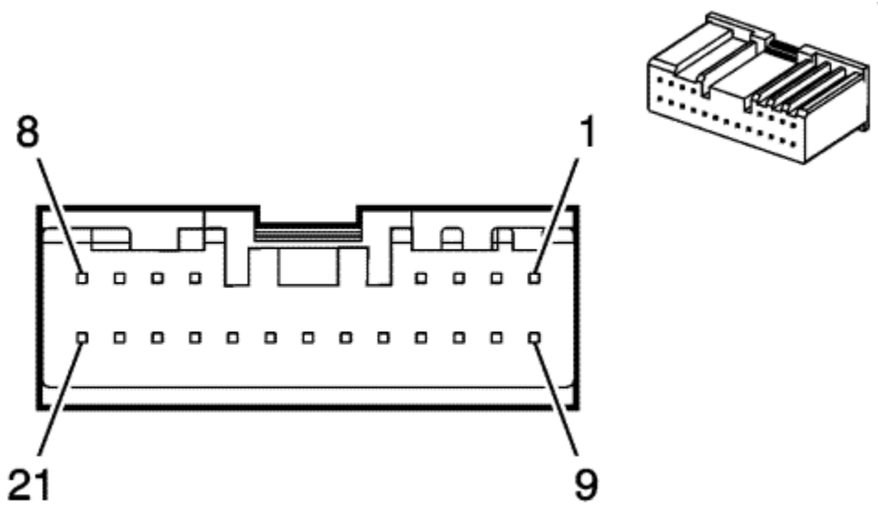

Connector Part Information

Harness Type: Hybrid Battery
OEM Connector: 13504009
Service Connector: Service by Harness - See Part Catalog
Description: 21-Way F (OG)

Terminal Part Information

Terminated Lead: 13575867
Release Tool: J-38125-215A
Diagnostic Test Probe: J-35616-64B (L-BU)

K112A Hybrid/EV Battery Interface Control Module 1 X4

Pin	Size	Colour	Circuit	Function	Option
1	0.35	L-GN/GY	5407	Battery Module Temperature Signal (16)	--
2	0.35	BK/L-GN	3775	Low Reference	-
3-8	--	--	--	Not Used	--

9	0.35	L-GN/VT	5577	Battery Voltage Signal (18)	--
10	0.35	WH/L-BU	5576	Battery Voltage Signal (17)	--
11	0.35	BN/WH	5575	Battery Voltage Signal (16)	-
12	0.35	WH/BK	5574	Battery Voltage Signal (15)	--
13	0.35	YE	5573	Battery Voltage Signal (14)	-
14	0.35	YE/GY	5572	Battery Voltage Signal (13)	-
15	0.35	BN	5571	Battery Voltage Signal (12)	-
16-21	--	--	--	Not Used	--

© Copyright Chevrolet. All rights reserved

K112B Hybrid/EV Battery Interface Control Module 2 X1

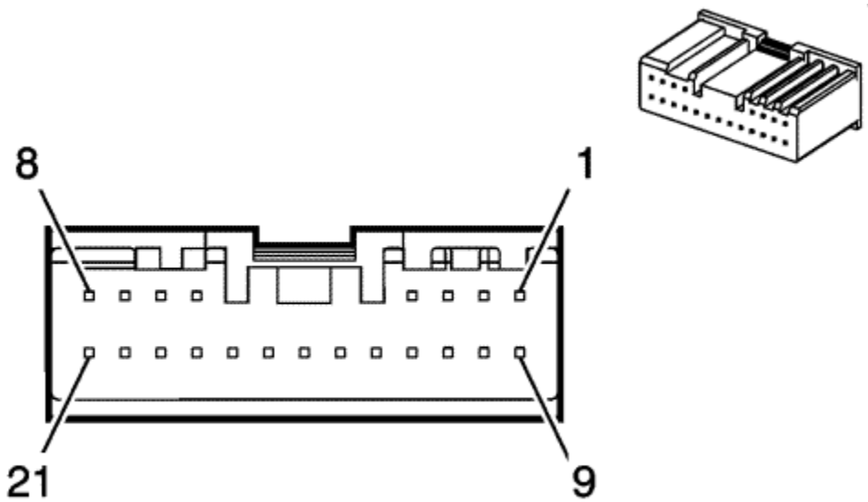

Connector Part Information

Harness Type: Hybrid Battery
OEM Connector: ATLPB-21-2AK
Service Connector: Service by Harness - See Part Catalog
Description: 21-Way F (BK)

Terminal Part Information

Terminated Lead: 13575867
Release Tool: J-38125-215A
Diagnostic Test Probe: J-35616-64B (L-BU)

K112B Hybrid/EV Battery Interface Control Module 2 X1

Pin	Size	Colour	Circuit	Function	Option
1-5	--	--	--	Not Used	--
6	0.5	BK/WH	251	Signal Ground	-
7-8	--	--	--	Not Used	--

9	0.5	GY/RD	705	5 Volt Reference	--
10	0.5	L-BU/YE	6434	CAN Bus High #2 Serial Data	--
11	0.5	WH/YE	6435	CAN Bus Low #2 Serial Data	-
12	0.5	BK/VT	470	Low Reference	-
13	0.5	L-BU/GY	5139	High-Voltage Fault Signal	-
14	0.5	L-BU	5139	High-Voltage Fault Signal	--
15	0.5	BK/VT	470	Low Reference	-
16	0.5	WH/YE	6435	CAN Bus Low #2 Serial Data	--
17	0.5	L-BU/YE	6434	CAN Bus High #2 Serial Data	--
18	0.5	GY/RD	705	5 Volt Reference	--
19	0.5	BK/WH	251	Signal Ground	-
20-21	--	--	--	Not Used	--

© Copyright Chevrolet. All rights reserved

K112B Hybrid/EV Battery Interface Control Module 2 X2

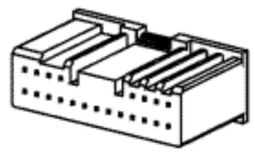

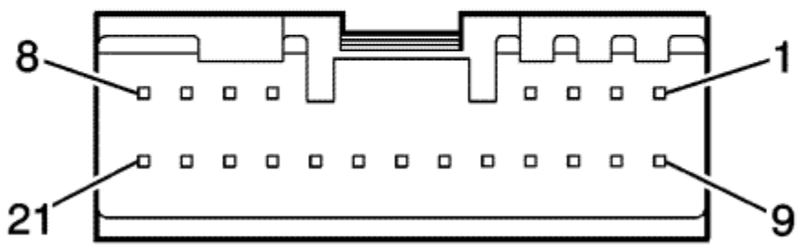

Connector Part Information

Harness Type: Hybrid Battery
OEM Connector: 13504010
Service Connector: Service by Harness - See Part Catalog
Description: 21-Way F (OG)

Terminal Part Information

Terminated Lead: 13575867
Release Tool: J-38125-215A
Diagnostic Test Probe: J-35616-64B (L-BU)

K112B Hybrid/EV Battery Interface Control Module 2 X2

Pin	Size	Colour	Circuit	Function	Option
1	0.35	BN/WH	5406	Battery Module Temperature Signal (9)	--
2	0.35	BK/L-BU	3774	Low Reference	--
3	0.35	BN	5405	Battery Module Temperature Signal (8)	-

4	0.35	BK/BN	3773	Low Reference	-
5-8	--	--	--	Not Used	--
9	0.35	BN	5571	Battery Voltage Signal (12)	--
10	0.35	L-GN/GY	5393	Battery Voltage Signal (11)	--
11	0.35	L-BU/GY	5392	Battery Voltage Signal (10)	-
12	0.35	L-GN/BK	5401	Battery Voltage Signal (9)	--
13	0.35	L-BU	5400	Battery Voltage Signal (8)	-
14	0.35	YE/BN	5399	Battery Voltage Signal (7)	-
15	0.35	L-GN	5398	Battery Voltage Signal (6)	--
16	0.35	YE/L-GN	5397	Battery Voltage Signal (5)	-
17	0.35	GY/YE	5396	Battery Voltage Signal (4)	--
18	0.35	WH	5395	Battery Voltage Signal (3)	--
19	0.35	YE/BN	5394	Battery Voltage Signal (2)	-
20	0.35	VT	5391	Battery Voltage Signal (1)	--
21	0.35	BK/VT	5403	Low Reference	-

© Copyright Chevrolet. All rights reserved

K112B Hybrid/EV Battery Interface Control Module 2 X3

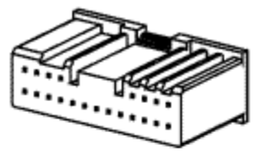

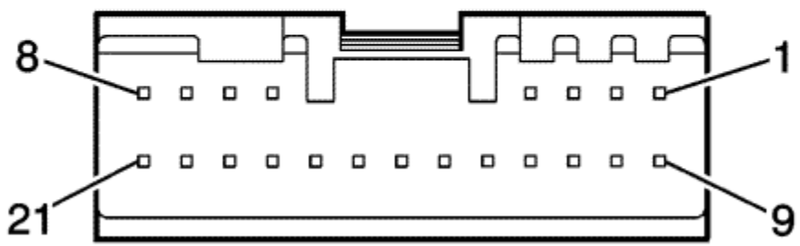

Connector Part Information

Harness Type: Hybrid Battery
OEM Connector: 13504010
Service Connector: Service by Harness - See Part Catalog
Description: 21-Way F (OG)

Terminal Part Information

Terminated Lead: 13575867
Release Tool: J-38125-215A
Diagnostic Test Probe: J-35616-64B (L-BU)

K112B Hybrid/EV Battery Interface Control Module 2 X3

Pin	Size	Colour	Circuit	Function	Option
1	0.35	BN/WH	5406	Battery Module Temperature Signal (11)	--
2	0.35	BK/L-BU	3774	Low Reference	--
3	0.35	BN	5405	Battery Module Temperature Signal (10)	-

4	0.35	BK/BN	3773	Low Reference	-
5-8	--	--	--	Not Used	--
9	0.35	BN	5571	Battery Voltage Signal (12)	--
10	0.35	L-GN/GY	5393	Battery Voltage Signal (11)	--
11	0.35	L-BU/GY	5392	Battery Voltage Signal (10)	-
12	0.35	L-GN/BK	5401	Battery Voltage Signal (9)	--
13	0.35	L-BU	5400	Battery Voltage Signal (8)	-
14	0.35	YE/BN	5399	Battery Voltage Signal (7)	-
15	0.35	L-GN	5398	Battery Voltage Signal (6)	--
16	0.35	YE/L-GN	5397	Battery Voltage Signal (5)	-
17	0.35	GY/YE	5396	Battery Voltage Signal (4)	--
18	0.35	WH	5395	Battery Voltage Signal (3)	--
19	0.35	YE/BN	5394	Battery Voltage Signal (2)	-
20	0.35	VT	5391	Battery Voltage Signal (1)	--
21	0.35	BK/VT	5403	Low Reference	-

© Copyright Chevrolet. All rights reserved

K112C Hybrid/EV Battery Interface Control Module 3 X1

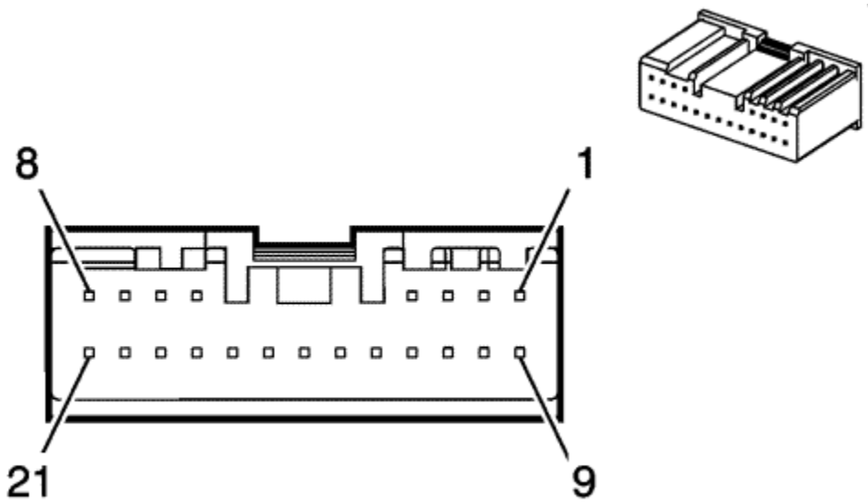

Connector Part Information

Harness Type: Hybrid Battery
OEM Connector: ATLPB-21-2AK
Service Connector: Service by Harness - See Part Catalog
Description: 21-Way F (BK)

Terminal Part Information

Terminated Lead: 13575867
Release Tool: J-38125-215A
Diagnostic Test Probe: J-35616-64B (L-BU)

K112C Hybrid/EV Battery Interface Control Module 3 X1

Pin	Size	Colour	Circuit	Function	Option
1-8	--	--	--	Not Used	--
9	0.5	GY/RD	705	5 Volt Reference	--
10	0.5	L-BU/YE	6434	CAN Bus High #2 Serial Data	--

11	0.5	WH/YE	6435	CAN Bus Low #2 Serial Data	-
12	0.5	BK/VT	470	Low Reference	-
13	0.5	L-BU	5139	High-Voltage Fault Signal	-
14	0.5	L-BU/GY	5139	High-Voltage Fault Signal	--
15	0.5	BK/VT	470	Low Reference	-
16	0.5	WH/YE	6435	CAN Bus Low #2 Serial Data	--
17	0.5	L-BU/YE	6434	CAN Bus High #2 Serial Data	--
18	0.5	GY/RD	705	5 Volt Reference	-
19	--	--	--	Not Used	--
20	0.5	BK/WH	351	Signal Ground	--
21	0.5	BK/WH	351	Signal Ground	-

© Copyright Chevrolet. All rights reserved

K112C Hybrid/EV Battery Interface Control Module 3 X2

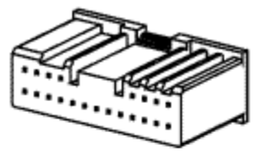

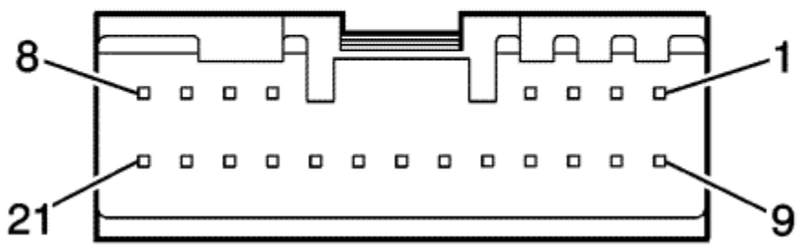

Connector Part Information

Harness Type: Hybrid Battery
OEM Connector: 13504010
Service Connector: Service by Harness - See Part Catalog
Description: 21-Way F (OG)

Terminal Part Information

Terminated Lead: 13575867
Release Tool: J-38125-215A
Diagnostic Test Probe: J-35616-64B (L-BU)

K112C Hybrid/EV Battery Interface Control Module 3 X2

Pin	Size	Colour	Circuit	Function	Option
1	0.35	BN/WH	5406	Battery Module Temperature Signal (5)	--
2	0.35	BK/L-BU	3774	Low Reference	--
3	0.35	BN	5405	Battery Module Temperature Signal (4)	-

4	0.35	BK/BN	3773	Low Reference	-
5-8	--	--	--	Not Used	--
9	0.35	BN	5571	Battery Voltage Signal (12)	--
10	0.35	L-GN/GY	5393	Battery Voltage Signal (11)	--
11	0.35	L-BU/GY	5392	Battery Voltage Signal (10)	-
12	0.35	L-GN/BK	5401	Battery Voltage Signal (9)	--
13	0.35	L-BU	5400	Battery Voltage Signal (8)	-
14	0.35	YE/BN	5399	Battery Voltage Signal (7)	-
15	0.35	L-GN	5398	Battery Voltage Signal (6)	--
16	0.35	YE/L-GN	5397	Battery Voltage Signal (5)	-
17	0.35	GY/YE	5396	Battery Voltage Signal (4)	--
18	0.35	WH	5395	Battery Voltage Signal (3)	--
19	0.35	YE/BN	5394	Battery Voltage Signal (2)	-
20	0.35	VT	5391	Battery Voltage Signal (1)	--
21	0.35	BK/VT	5403	Low Reference	-

© Copyright Chevrolet. All rights reserved

K112C Hybrid/EV Battery Interface Control Module 3 X3

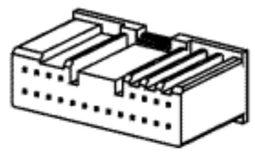

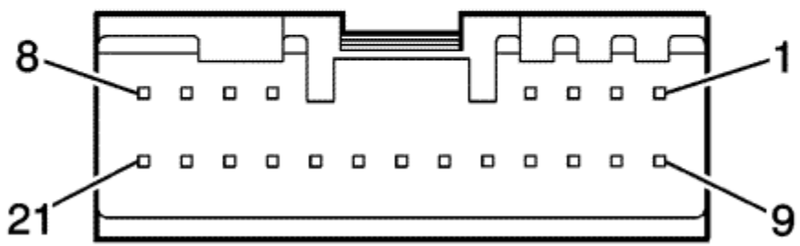

Connector Part Information

Harness Type: Hybrid Battery
OEM Connector: 13504010
Service Connector: Service by Harness - See Part Catalog
Description: 21-Way F (OG)

Terminal Part Information

Terminated Lead: 13575867
Release Tool: J-38125-215A
Diagnostic Test Probe: J-35616-64B (L-BU)

K112C Hybrid/EV Battery Interface Control Module 3 X3

Pin	Size	Colour	Circuit	Function	Option
1	0.35	BN/WH	5406	Battery Module Temperature Signal (7)	--
2	0.35	BK/L-BU	3774	Low Reference	--
3	0.35	BN	5405	Battery Module Temperature Signal (6)	-

4	0.35	BK/BN	3773	Low Reference	-
5-8	--	--	--	Not Used	--
9	0.35	BN	5571	Battery Voltage Signal (12)	--
10	0.35	L-GN/GY	5393	Battery Voltage Signal (11)	--
11	0.35	L-BU/GY	5392	Battery Voltage Signal (10)	-
12	0.35	L-GN/BK	5401	Battery Voltage Signal (9)	--
13	0.35	L-BU	5400	Battery Voltage Signal (8)	-
14	0.35	YE/BN	5399	Battery Voltage Signal (7)	-
15	0.35	L-GN	5398	Battery Voltage Signal (6)	--
16	0.35	YE/L-GN	5397	Battery Voltage Signal (5)	-
17	0.35	GY/YE	5396	Battery Voltage Signal (4)	--
18	0.35	WH	5395	Battery Voltage Signal (3)	--
19	0.35	YE/BN	5394	Battery Voltage Signal (2)	-
20	0.35	VT	5391	Battery Voltage Signal (1)	--
21	0.35	BK/VT	5403	Low Reference	-

© Copyright Chevrolet. All rights reserved

K112D Hybrid/EV Battery Interface Control Module 4 X1

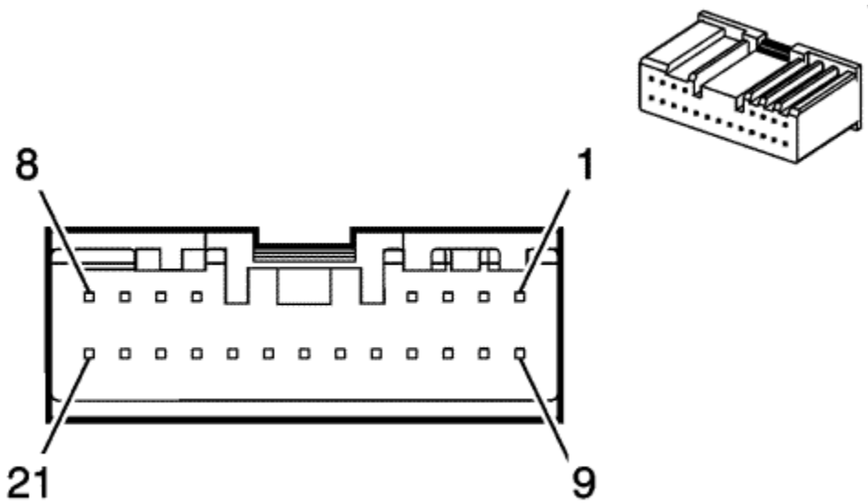

Connector Part Information

Harness Type: Hybrid Battery
OEM Connector: ATLPB-21-2AK
Service Connector: Service by Harness - See Part Catalog
Description: 21-Way F (BK)

Terminal Part Information

Terminated Lead: 13575867
Release Tool: J-38125-215A
Diagnostic Test Probe: J-35616-64B (L-BU)

K112D Hybrid/EV Battery Interface Control Module 4 X1

Pin	Size	Colour	Circuit	Function	Option
1-8	--	--	--	Not Used	--
9	0.5	GY/RD	705	5 Volt Reference	--
10	0.5	L-BU/YE	6434	CAN Bus High #2 Serial Data	--

11	0.5	WH/YE	6435	CAN Bus Low #2 Serial Data	-
12	0.5	BK/VT	470	Low Reference	-
13	0.5	L-BU/GY	5139	High-Voltage Fault Signal	-
14-21	--	--	--	Not Used	--

© Copyright Chevrolet. All rights reserved

K112D Hybrid/EV Battery Interface Control Module 4 X2

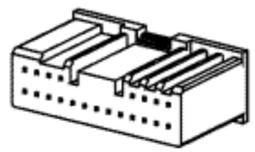

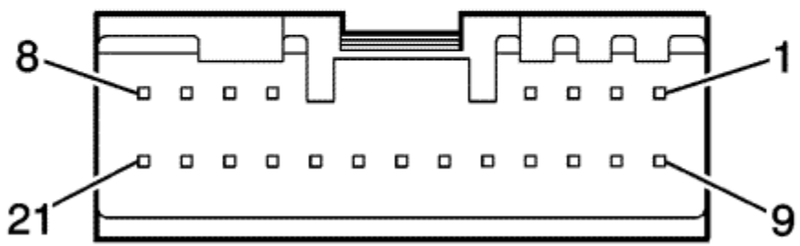

Connector Part Information

Harness Type: Hybrid Battery
OEM Connector: 13504010
Service Connector: Service by Harness - See Part Catalog
Description: 21-Way F (OG)

Terminal Part Information

Terminated Lead: 13575867
Release Tool: J-38125-215A
Diagnostic Test Probe: J-35616-64B (L-BU)

K112D Hybrid/EV Battery Interface Control Module 4 X2

Pin	Size	Colour	Circuit	Function	Option
1	0.35	BN/WH	5406	Battery Module Temperature Signal (2)	--
2	0.35	BK/L-BU	3774	Low Reference	--
3	0.35	BN	5405	Battery Module Temperature Signal (1)	-

4	0.35	BK/BN	3773	Low Reference	-
5-8	--	--	--	Not Used	--
9	0.35	BN	5571	Battery Voltage Signal (12)	--
10	0.35	L-GN/GY	5393	Battery Voltage Signal (11)	--
11	0.35	L-BU/GY	5392	Battery Voltage Signal (10)	-
12	0.35	L-GN/BK	5401	Battery Voltage Signal (9)	--
13	0.35	L-BU	5400	Battery Voltage Signal (8)	-
14	0.35	YE/BN	5399	Battery Voltage Signal (7)	-
15	0.35	L-GN	5398	Battery Voltage Signal (6)	--
16	0.35	YE/L-GN	5397	Battery Voltage Signal (5)	-
17	0.35	GY/YE	5396	Battery Voltage Signal (4)	--
18	0.35	WH	5395	Battery Voltage Signal (3)	--
19	0.35	YE/BN	5394	Battery Voltage Signal (2)	-
20	0.35	VT	5391	Battery Voltage Signal (1)	--
21	0.35	BK/VT	5403	Low Reference	-

© Copyright Chevrolet. All rights reserved

K112D Hybrid/EV Battery Interface Control Module 4 X3

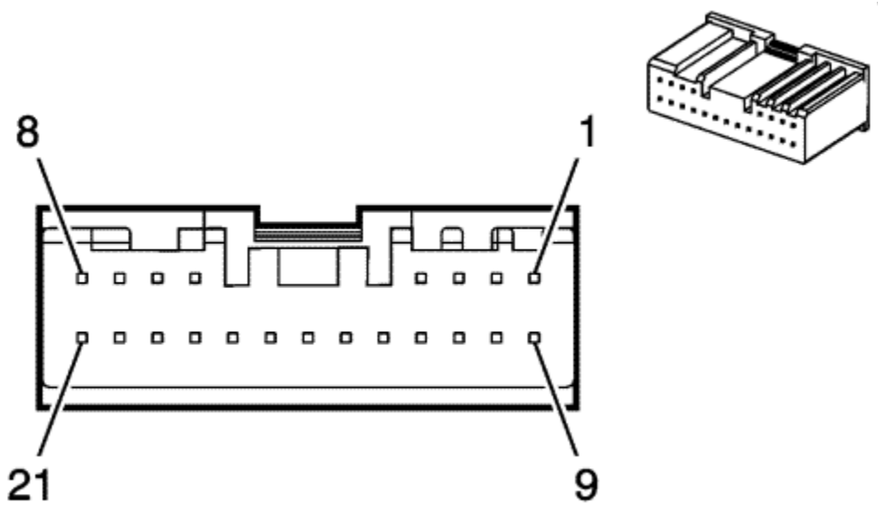

Connector Part Information

Harness Type: Hybrid Battery
OEM Connector: 13504009
Service Connector: Service by Harness - See Part Catalog
Description: 21-Way F (OG)

Terminal Part Information

Terminated Lead: 13575867
Release Tool: J-38125-215A
Diagnostic Test Probe: J-35616-64B (L-BU)

K112D Hybrid/EV Battery Interface Control Module 4 X3

Pin	Size	Colour	Circuit	Function	Option
1	0.35	L-GN/GY	5407	Battery Module Temperature Signal (3)	--
2	0.35	BK/L-GN	3775	Low Reference	-
3-8	--	--	--	Not Used	--

9	0.35	L-GN/VT	5577	Battery Voltage Signal (18)	--
10	0.35	WH/L-BU	5576	Battery Voltage Signal (17)	--
11	0.35	BN/WH	5575	Battery Voltage Signal (16)	-
12	0.35	WH/BK	5574	Battery Voltage Signal (15)	--
13	0.35	YE	5573	Battery Voltage Signal (14)	-
14	0.35	YE/GY	5572	Battery Voltage Signal (13)	-
15	0.35	BN	5571	Battery Voltage Signal (12)	-
16-21	--	--	--	Not Used	--

© Copyright Chevrolet. All rights reserved

K114B Hybrid Powertrain Control Module 2 X1

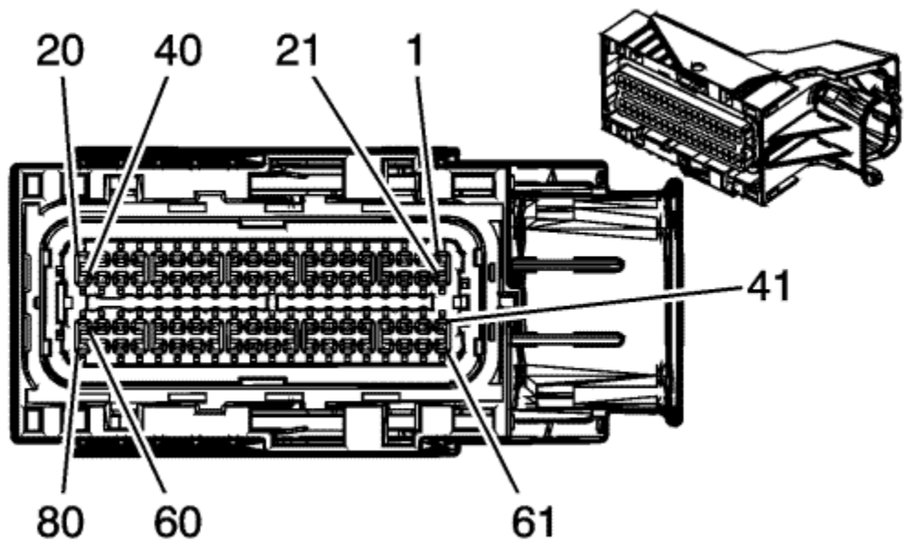

Connector Part Information

Harness Type: Body
OEM Connector: 34566-0703
Service Connector: 13577545
Description: 80-Way F MX123 Series, Sealed (BK with BU Terminal Position Assurance Lock)

Terminal Part Information

Pins: 1-3, 5, 6, 8-10, 17, 18, 20, 24, 25, 27, 37, 38, 45, 47, 49-52, 54, 55, 57, 58, 62, 64, 65, 67, 72, 74, 75, 77, 78
Terminated Lead: 13575813
Release Tool: J-38125-213
Diagnostic Test Probe: J-35616-64B (L-BU)

Pins: 26, 31-33, 40, 60, 63, 69, 70, 73, 80
Terminated Lead: Pending
Release Tool: J-38125-213
Diagnostic Test Probe: J-35616-64B (L-BU)

K114B Hybrid Powertrain Control Module 2 X1

Pin	Size	Colour	Circuit	Function	Option
1	0.5	BK	2050	Ground	--
2	0.5	RD/L-BU	5240	Battery Positive Voltage	--
3	0.5	YE/VT	3962	High-Voltage Battery 3 (+) Relay Control	--
4	--	--	--	Not Used	--
5	0.5	WH/BN	3963	High-Voltage Battery 3 (-) Relay Control	--
6	0.5	VT/GY	3961	High-Voltage Battery (-) Relay Control	-
7	--	--	--	Not Used	--
8	0.5	GY/L-BU	5137	Precharge Relay PWM Signal	--
9	0.5	BN/L-GN	3959	High-Voltage Battery 1 (+) Relay Control	--
10	0.5	GY/L-BU	3960	High-Voltage Battery 2 (+) Relay Control	-
11-16	--	--	--	Not Used	--
17	0.5	L-BU	2500	High Speed GMLAN Serial Data (+) (1)	-
18	0.5	WH	2501	High Speed GMLAN Serial Data (-) (1)	-
19	--	--	--	Not Used	--
20	0.5	BK/YE	407	Low Reference	-
21-23	--	--	--	Not Used	--
24	0.5	BK/GY	3820	Low Reference	--
25	0.5	L-GN/YE	3822	Rechargeable Energy Storage System Coolant HVAC Mode Sensor Signal	-
26	0.35	L-BU/GY	636	Outside Ambient Air Temperature Sensor Signal	-
27	0.5	L-GN/VT	2032	Coolant Temperature Sensor Signal	-
28-30	--	--	--	Not Used	--
31	0.35	L-BU	204	A/C Low-Pressure Sensor Signal	-
32	0.35	WH/L-BU	732	A/C Refrigerant High Temperature Sensor Signal	-
33	0.35	BK/VT	452	Low Reference	-
34-36	--	--	--	Not Used	--
37	0.5	L-BU	2500	High Speed GMLAN Serial Data (+) (1)	-
38	0.5	WH	2501	High Speed GMLAN Serial Data (-) (1)	-
39	--	--	--	Not Used	--
40	0.35	BK/L-BU	61	Outside Ambient Temperature Sensor Low Reference	-
41-44	--	--	--	Not Used	--
45	0.5	BK/BN	5088	Low Reference	-
46	--	--	--	Not Used	--
47	0.5	VT	5087	High-Voltage Interlock Loop Signal (1)	--

48	--	--	--	Not Used	-
49	0.5	BK/L-BU	720	Low Reference	--
50	0.5	VT/BN	2028	Coolant Valve Position Sensor Signal	--
51	0.5	YE/BK	3829	Fuel Door Status Signal	-
52	0.5	YE	5530	Bonnet Open Switch Signal	-
53	--	--	--	Not Used	--
54	0.5	L-BU/BK	7493	High Speed GMLAN Serial Data (+)(3)	--
55	0.5	WH	7494	High Speed GMLAN Serial Data (-)(3)	-
56	--	--	--	Not Used	--
57	0.5	L-BU/L-GN	6433	CAN Bus High Serial Data	-
58	0.5	WH	6432	CAN Bus Low Serial Data	-
59	--	--	--	Not Used	--
60	0.35	BK/L-GN	476	Low Reference	-
61	--	--	--	Not Used	--
62	0.5	VT/RD	3821	Rechargeable Energy Storage System Coolant HVAC Mode Sensor High Reference	--
63	0.35	L-BU/RD	474	5 Volt Reference	-
64	0.5	WH/RD	596	5 Volt Reference	--
65	0.5	BK/VT	5596	Low Reference	-
66	--	--	--	Not Used	--
67	0.5	GY/VT	5595	High-Voltage Interlock Loop Signal (2)	-
68	--	--	--	Not Used	--
69	0.35	VT/BN	3699	Charge Port Door Switch Signal	-
70	0.35	GY/WH	1447	Fuel Door Release Switch Signal	-
71	--	--	--	Not Used	--
72	0.5	L-BU/BK	6502	Fuel Door Open Signal	-
73	0.35	BK/GY	718	Low Reference	-
74	0.5	L-BU/BK	7493	High Speed GMLAN Serial Data (+)(3)	-
75	0.5	WH	7494	High Speed GMLAN Serial Data (-)(3)	-
76	--	--	--	Not Used	--
77	0.5	L-BU/L-GN	6433	CAN Bus High Serial Data	-
78	0.5	WH	6432	CAN Bus Low Serial Data	-
79	--	--	--	Not Used	--
80	0.35	BK/L-BU	3828	Low Reference	-

© Copyright Chevrolet. All rights reserved

K114B Hybrid Powertrain Control Module 2 X2

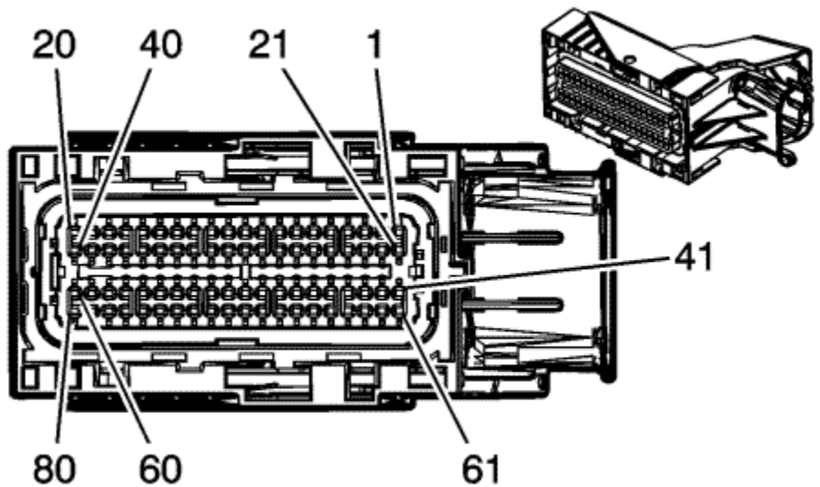

Connector Part Information

Harness Type: Body
OEM Connector: 34566-0803
Service Connector: 19115670
Description: 80-Way F MX123 34566 Series (BK with GY Terminal Position Assurance Lock)

Terminal Part Information

Pins: 7, 8, 14, 15, 21, 25, 29, 33, 42, 47, 62, 64, 68, 73 and 74
Terminated Lead: Pending
Release Tool: J-38125-213
Diagnostic Test Probe: J-35616-64B (L-BU)

Pins: 9-11, 27, 38, 41, 48, 49, 52-54, 59, 61, 67, 69, 71, 72, 79
Terminated Lead: 13575813
Release Tool: J-38125-213
Diagnostic Test Probe: J-35616-64B (L-BU)

K114B Hybrid Powertrain Control Module 2 X2

Pin	Size	Colour	Circuit	Function	Option

1-6	--	--	--	Not Used	--
7	0.35	BN/WH	3827	Refuel Request Switch Signal	--
8	0.35	GY/L-GN	3954	Control Pilot Signal 1	--
9	0.5	L-BU/VT	2364	Cooling Fan Speed Signal	--
10	0.5	L-BU/GY	5139	High-Voltage Fault Signal	--
11	0.5	BN/L-GN	3793	Accessory Power Module Cooling Fan Feedback Signal	-
12-13	--	--	--	Not Used	--
14	0.35	VT/L-BU	3790	Electric Coolant Motor Feedback Signal	-
15	0.35	L-BU/YE	3953	Proximity Status Signal 1	-
16-20	--	--	--	Not Used	--
21	0.35	BK/L-GN	3958	Low Reference	-
22-24	--	--	--	Not Used	--
25	0.35	WH/L-BU	3697	Charge Port Door Sensor Signal	-
26	--	--	--	Not Used	--
27	0.5	VT/WH	639	Run/Crank Ignition 1 Voltage	-
28	--	--	--	Not Used	--
29	0.35	BN/YE	3698	Charge Port Door Switch Wake-up Signal	-
30-32	--	--	--	Not Used	--
33	0.35	YE/GY	3796	Rechargeable Energy Storage System 1 Coolant Motor Feedback Signal	-
34-37	--	--	--	Not Used	--
38	0.5	L-GN	5060	Low Speed GMLAN Serial Data	-
39-40	--	--	--	Not Used	--
41	0.5	L-BU/BK	6801	Fuel Door Lock/Unlock (1) Reference	-
42	0.35	WH/L-GN	3794	Rechargeable Energy Storage System 1 Coolant Motor Enable	-
43-46	--	--	--	Not Used	--
47	0.35	BN/L-BU	3788	Electric Coolant Motor Enable	--
48	0.5	L-BU/BN	3787	High-Voltage Energy Management Communication Enable	-
49	0.5	L-GN/VT	3791	Accessory Power Module Cooling Fan Enable	-
50-51	--	--	--	Not Used	--
52	0.5	WH	2368	Cooling Fan Control Signal	-
53	0.5	GY/L-BU	3336	High-Voltage Battery Pack Traction Power Inverter Module Contactor Status	--
54	0.5	VT	3195	Auxiliary Heater Control	-
55-58	--	--	--	Not Used	--
59	0.5	L-BU/VT	3818	Rechargeable Energy Storage System Coolant HVAC Mode Motor High Control	-

60	--	--	--	Not Used	--
61	0.5	L-BU	6800	Fuel Door Lock/Unlock (1) Signal	-
62	0.35	GY/L-GN	3957	Charging Pilot Signal Indicator Control	--
63	--	--	--	Not Used	--
64	0.35	YE/VT	3956	Charging Status Indicator Control	-
65-66	--	--	--	Not Used	--
67	0.5	VT/YE	5985	Accessory Wakeup Serial Data	-
68	0.35	YE/VT	3695	Charge Port Door Relay Control	--
69	0.5	L-BU/WH	3977	Accessory Wake-up Serial Data 2	-
70	--	--	--	Not Used	--
71	0.5	YE/GY	3792	Accessory Power Module Cooling Fan Control	-
72	0.5	YE/L-BU	5125	Heater Solenoid Valve Control	-
73	0.35	L-BU/VT	3795	Rechargeable Energy Storage System 1 Coolant Motor Control	--
74	0.35	YE/L-GN	3789	Electric Coolant Motor Control	-
75-78	--	--	--	Not Used	--
79	0.5	WH/YE	3819	Rechargeable Energy Storage System Coolant HVAC Mode Motor Low Control	-
80	--	--	--	Not Used	--

© Copyright Chevrolet. All rights reserved

M6 Air Temperature Door Actuator

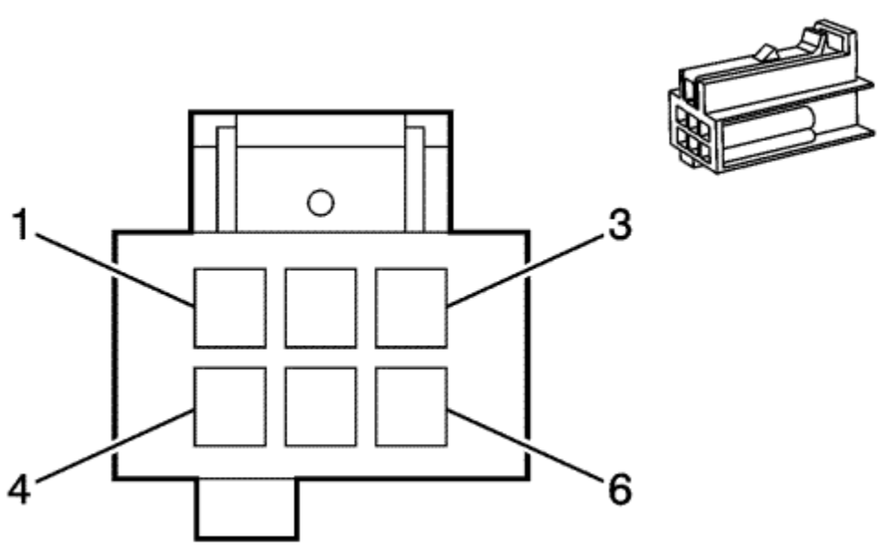

Connector Part Information

Harness Type: HVAC
OEM Connector: 15338980
Service Connector: Service by Harness - See Part Catalog
Description: 6-Way F 0.64 MQS Series (BK)

Terminal Part Information

Terminated Lead: 13575782
Release Tool: J-38125-12A
Diagnostic Test Probe: J-35616-64B (L-BU)

M6 Air Temperature Door Actuator

Pin	Size	Colour	Circuit	Function	Option
1	0.35	D-GN	3169	Temp Door Stepper Motor Control (1)	--
2	0.35	OG	7572	HVAC Motor Supply Voltage	--
3	0.35	WH/PK	3170	Temp Door Stepper Motor Control (1)	-

4	0.35	GY/RD	3171	Temp Door Stepper Motor Control (4)	--
5	--	--	--	Not Used	--
6	0.35	RD/BK	3172	Temp Door Stepper Motor Control (2)	-

© Copyright Chevrolet. All rights reserved

M15A Drive Motor 1 X1

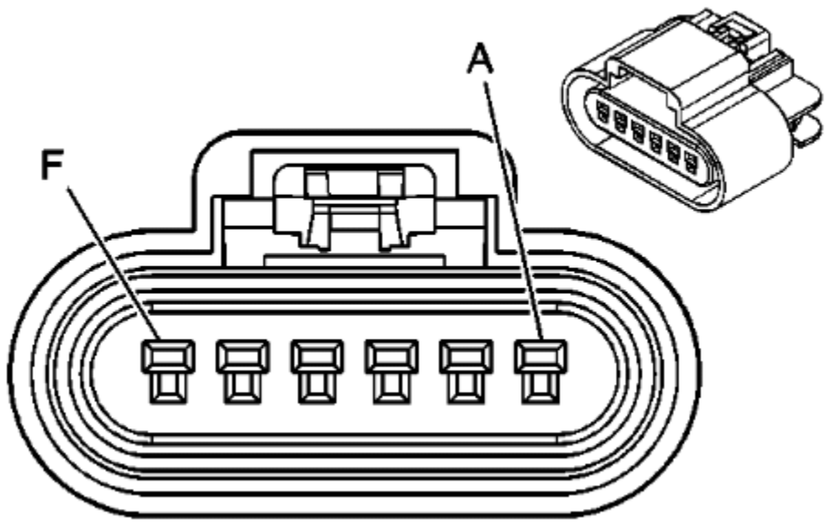

Connector Part Information

Harness Type: Transmission
OEM Connector: 13824977
Service Connector: Service by Harness - See Part Catalog
Description: 6-Way F GT 150 Sealed (BK)

Terminal Part Information

Terminated Lead: Service by Harness - See Part Catalog
Release Tool: J-38125-553
Diagnostic Test Probe: J-35616-2A (GY)

M15A Drive Motor 1 X1

Pin	Size	Colour	Circuit	Function	Option
A	0.5	BK	910	Traction Power Inverter Module Resolver #2 S3 Signal	-
B	0.5	RD	911	Traction Power Inverter Module Resolver #2 S1 Signal	-
C	0.5	GY	912	Transmission Traction Power Inverter Module Resolver #2 Excitation Signal Negitive	--
D	0.5	L-BU	913	Traction Power Inverter Module Resolver #2 Excitation Signal Positive	-

E	0.5	YE	914	Traction Power Inverter Module Resolver #2 S2 Signal	-
F	0.5	D-GN	915	Traction Power Inverter Module Resolver #2 S4 Signal	-

© Copyright Chevrolet. All rights reserved

M15B Drive Motor 2 X1

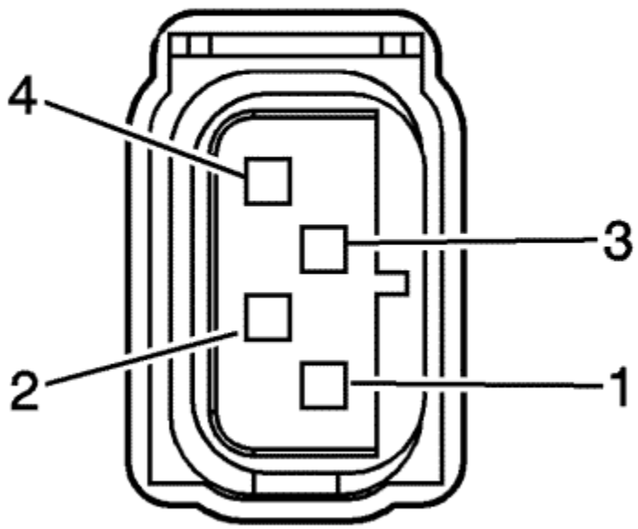

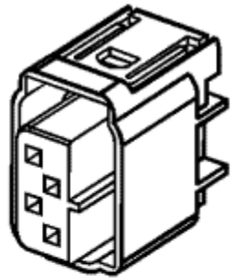

Connector Part Information

Harness Type: Engine
OEM Connector: 1-967640-1
Service Connector: 88953370
Description: 4-Way F 0.64 MQS Series, Sealed (BK)

Terminal Part Information

Terminated Lead: Pending
Release Tool: J-38125-12A
Diagnostic Test Probe: J-35616-64B (L-BU)

M15B Drive Motor 2 X1

Pin	Size	Colour	Circuit	Function	Option
1	0.5	BN	7652	Traction Power Inverter Module Resolver #1 S3 Signal	--
2	0.5	YE	7649	Traction Power Inverter Module Resolver #1 S1 Signal	--
3	0.5	VT/L-GN	7647	Transmission Traction Power Inverter Module Resolver #1 S2 Signal	-
4	0.5	GY	7646	Transmission Traction Power Inverter Module Resolver #1 S4 Signal	-

© Copyright Chevrolet. All rights reserved

M15B Drive Motor 2 X2

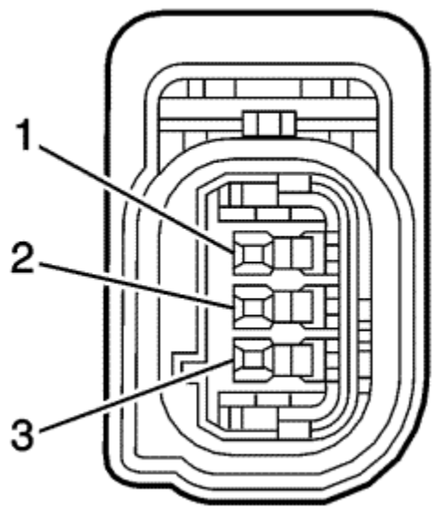

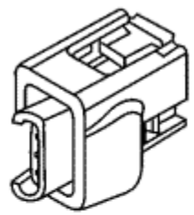

Connector Part Information

Harness Type: Engine
OEM Connector: 1438454-1
Service Connector: Pending
Description: 3-Way F 064 Series, Sealed (BK)

Terminal Part Information

Terminated Lead: Pending
Release Tool: Pending
Diagnostic Test Probe: Pending

M15B Drive Motor 2 X2

Pin	Size	Colour	Circuit	Function	Option
1	0.5	WH/L-GN	7648	Traction Power Inverter Module Resolver #1 Excitation Signal Negative	-
2	0.5	L-BU	7645	Traction Power Inverter Module Resolver #1 Excitation Signal Positive	--
3	0.5	BK/WH	751	Signal Ground	-

© Copyright Chevrolet. All rights reserved

M37 Mode Door Actuator

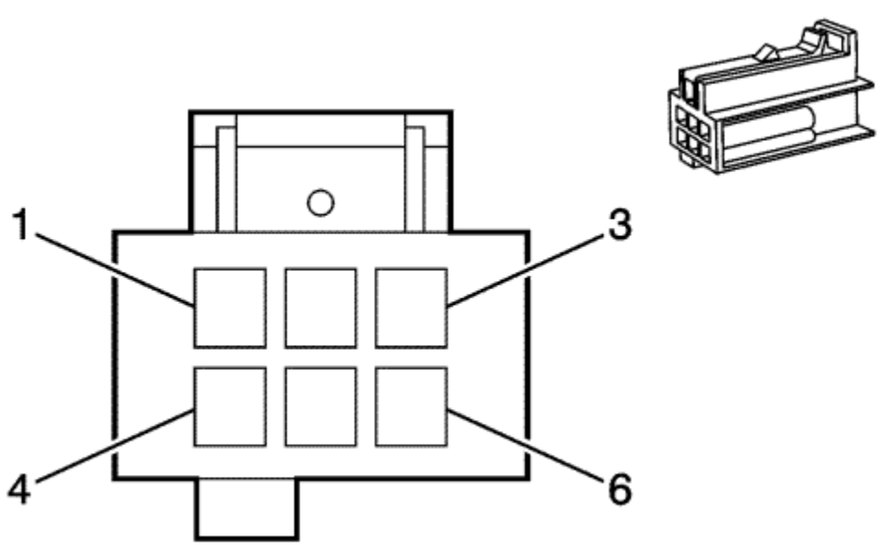

Connector Part Information

Harness Type: HVAC
OEM Connector: 15338980
Service Connector: Service by Harness - See Part Catalog
Description: 6-Way F 0.64 MQS Series (BK)

Terminal Part Information

Terminated Lead: 13575782
Release Tool: J-38125-12A
Diagnostic Test Probe: J-35616-64B (L-BU)

M37 Mode Door Actuator

Pin	Size	Colour	Circuit	Function	Option
1	0.35	YE	3167	Mode Door Stepper Motor Control (3)	--
2	0.35	OG	7572	HVAC Motor Supply Voltage	--
3	0.35	WH/RD	3165	Mode Door Stepper Motor Control (1)	-

4	0.35	GY/OG	3168	Mode Door Stepper Motor Control (4)	--
5	--	--	--	Not Used	--
6	0.35	D-GN/WH	3166	Mode Door Stepper Motor Control (2)	-

© Copyright Chevrolet. All rights reserved

M46 Air Recirculation Door Actuator

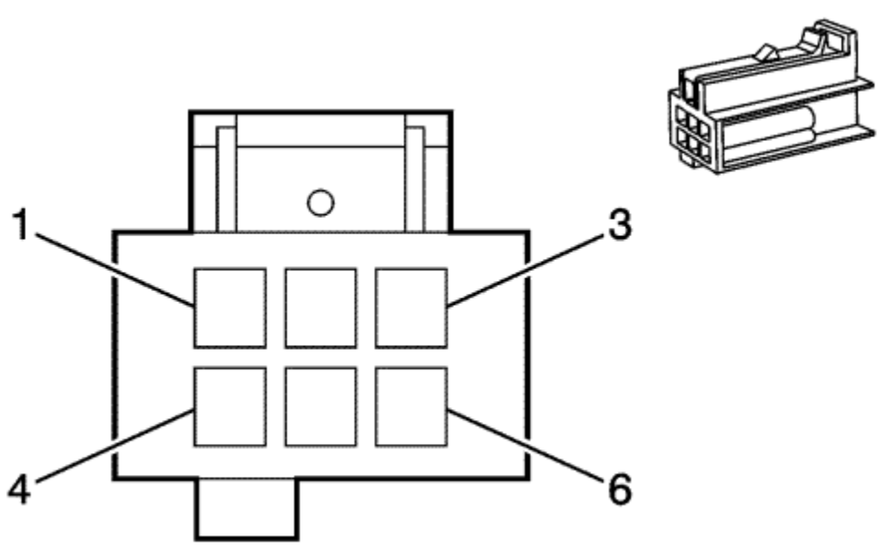

Connector Part Information

Harness Type: HVAC
OEM Connector: 15338980
Service Connector: Service by Harness - See Part Catalog
Description: 6-Way F 0.64 MQS Series (BK)

Terminal Part Information

Terminated Lead: 13575782
Release Tool: J-38125-12A
Diagnostic Test Probe: J-35616-64B (L-BU)

M46 Air Recirculation Door Actuator

Pin	Size	Colour	Circuit	Function	Option
1	0.35	GY	3173	Air Inlet Door Stepper Motor Control (1)	--
2	0.35	OG	7572	HVAC Motor Supply Voltage	--
3	0.35	D-BU/WH	3174	Air Inlet Door Stepper Motor Control (1)	-

4	0.35	OG/D-GN	3175	Air Inlet Door Stepper Motor Control (4)	--
5	--	--	--	Not Used	--
6	0.35	RD/D-GN	3176	Air Inlet Door Stepper Motor Control (2)	-

© Copyright Chevrolet. All rights reserved

M74D Window Motor - Driver

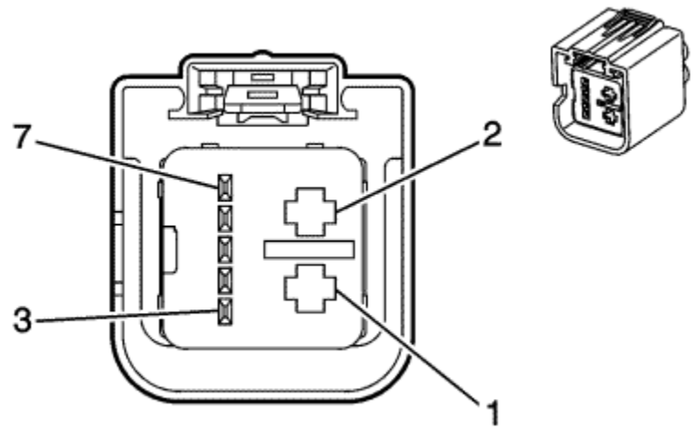

Connector Part Information

Harness Type: Driver Door
OEM Connector: 1732115-1
Service Connector: Service by Harness - See Part Catalog
Description: 7-Way F Kaizen 0.64 2.8 Timer Series, Sealed (BK)

Terminal Part Information

Pins: 1, 2
Terminated Lead:
Release Tool: J-38125-36
Diagnostic Test Probe: J-35616-35 (VT)

Pins: 3-7
Terminated Lead: 13575845
Release Tool: J-38125-215A
Diagnostic Test Probe: J-35616-64B (L-BU)

M74D Window Motor - Driver

Pin	Size	Colour	Circuit	Function	Option
1	2.5	BK	1550	Ground	--
2	2.5	RD/BN	3640	Battery Positive Voltage	--

3	0.35	L-GN/WH	3379	Power Window Switch Driver Up Signal	-
4	0.5	L-GN/YE	6134	Linear Interconnect Network Bus 3	-
5	0.35	L-GN	3381	Power Window Switch Driver Express Signal	--
6	0.35	GY	745	Left Front Door Ajar Switch Signal	--
7	0.35	GY	3380	Power Window Switch Driver Down Signal	-

© Copyright Chevrolet. All rights reserved

M74LR Window Motor - Left Rear

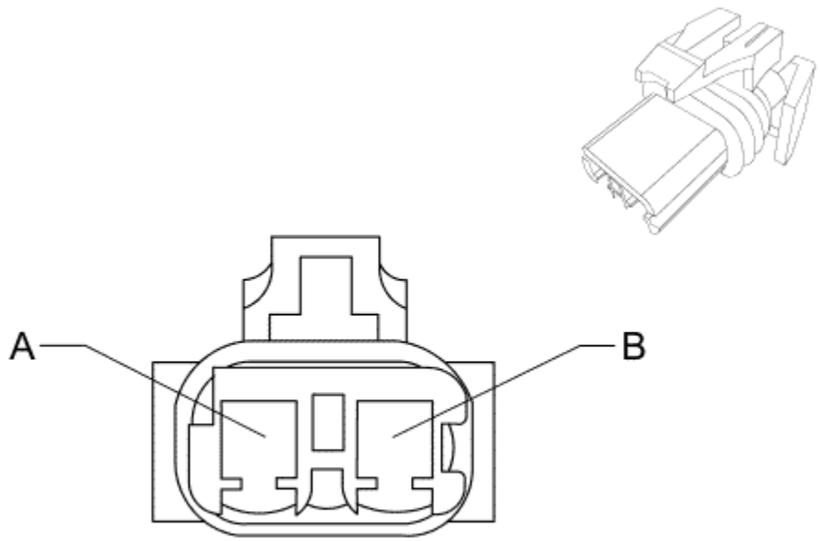

Connector Part Information

Harness Type: Left Rear Door
OEM Connector: 12129487
Service Connector: 88988609
Description: 2-Way F Metri-Pack 280 Series, Sealed (GY)

Terminal Part Information

Terminated Lead:
Release Tool: J-38125-553
Diagnostic Test Probe: J-35616-4A (PU)

M74LR Window Motor - Left Rear

Pin	Size	Colour	Circuit	Function	Option
A	2.5	L-BU/VT	668	Power Window Motor Left Rear Up Control	-

B	2.5	YE/L-BU	669	Power Window Motor Left Rear Down Control	-

© Copyright Chevrolet. All rights reserved

M74P Window Motor - Passenger

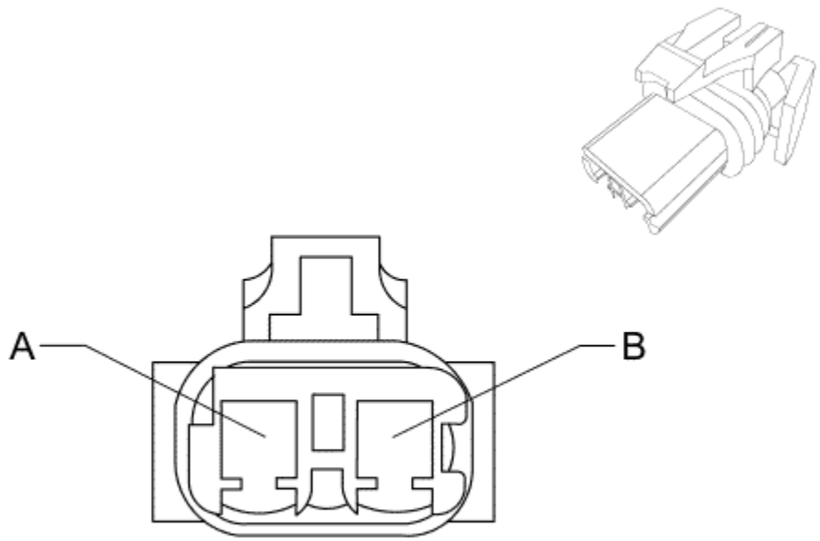

Connector Part Information

Harness Type: Passenger Door
OEM Connector: 12129487
Service Connector: 88988609
Description: 2-Way F Metri-Pack 280 Series, Sealed (GY)

Terminal Part Information

Terminated Lead:
Release Tool: J-38125-553
Diagnostic Test Probe: J-35616-4A (PU)

M74P Window Motor - Passenger

Pin	Size	Colour	Circuit	Function	Option
A	2.5	L-GN/GY	3387	Power Window Motor Co-Driver Up Control	-

B	2.5	YE/L-BU	3388	Power Window Motor Co-Driver Down Control	-

© Copyright Chevrolet. All rights reserved

M74RR Window Motor - Right Rear

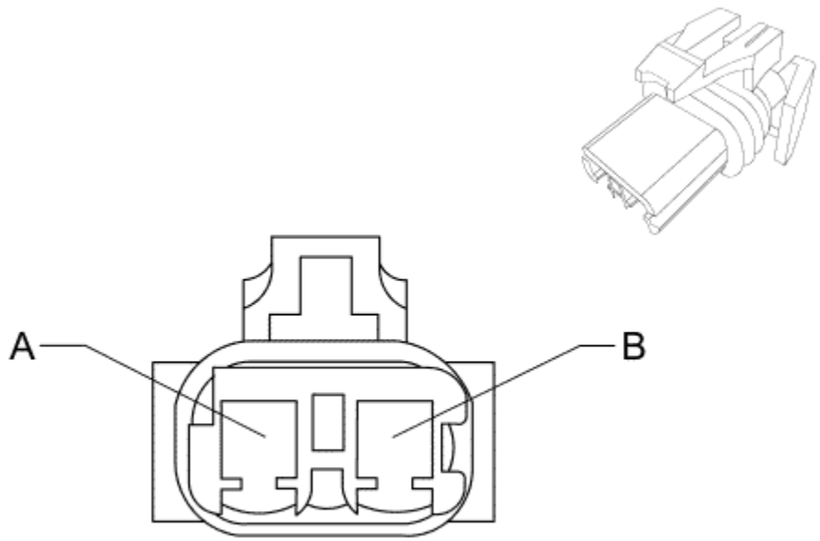

Connector Part Information

Harness Type: Right Rear Door
OEM Connector: 12129487
Service Connector: 88988609
Description: 2-Way F Metri-Pack 280 Series, Sealed (GY)

Terminal Part Information

Terminated Lead:
Release Tool: J-38125-553
Diagnostic Test Probe: J-35616-4A (PU)

M74RR Window Motor - Right Rear

Pin	Size	Colour	Circuit	Function	Option
A	2.5	L-BU/GY	670	Power Window Motor Right Rear Up Control	-

B	2.5	L-GN/BK	671	Power Window Motor Right Rear Down Control	-

© Copyright Chevrolet. All rights reserved

M75 Windscreen Wiper Motor

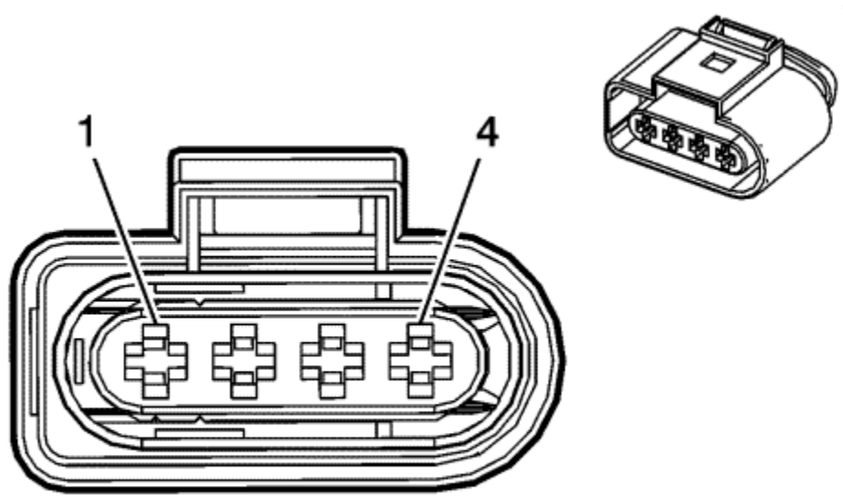

Connector Part Information

Harness Type: Forward Lamp
OEM Connector: 638245-2
Service Connector: 88987987
Description: 4-Way F Junior Power Timer Series (BK)

Terminal Part Information

Pins: 1, 2
Terminated Lead: Service by Connector Assembly - 88987987
Release Tool: J-38125-36
Diagnostic Test Probe: J-35616-35 (VT)

Pins: 3, 4
Terminated Lead: Service by Connector Assembly - 88987987
Release Tool: J-38125-36
Diagnostic Test Probe: J-35616-35 (VT)

M75 Windscreen Wiper Motor

Pin	Size	Colour	Circuit	Function	Option
1	2.5	RD/YE	3740	Battery Positive Voltage	-
2	2.5	BK	1950	Ground	--
3	0.35	GY	91	Windscreen Wiper Motor Relay Coil Supply Voltage	-
4	0.35	L-GN/BN	6132	Linear Interconnect Network Bus 1	-

© Copyright Chevrolet. All rights reserved

M77D Outside Rear-view Mirror Motor - Driver

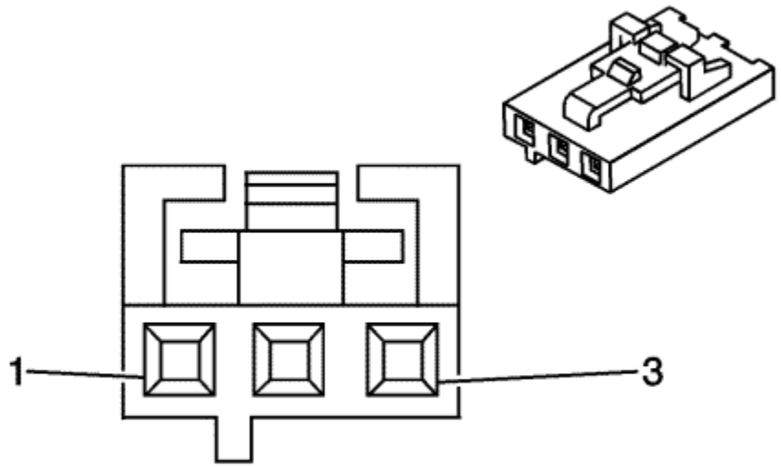

Connector Part Information

Harness Type: Outside Rear-view Mirror
OEM Connector: Not Available
Service Connector: Service by Assembly - See Parts catalogue
Description: 3-Way F (BK)

Terminal Part Information

Terminated Lead: Not Available
Release Tool: Service by Assembly - See Parts catalogue
Diagnostic Test Probe: Not Available

M77D Outside Rear-view Mirror Motor - Driver

Pin	Size	Colour	Circuit	Function	Option
1	0.35	D-GN/WH	81	Left Mirror Motor Right Control	--
2	0.35	WH	329	Left Mirror Motor Supply Voltage	--
3	0.35	D-BU/WH	88	Left Mirror Motor Up Control	-

© Copyright Chevrolet. All rights reserved

M77P Outside Rear-view Mirror Motor - Passenger

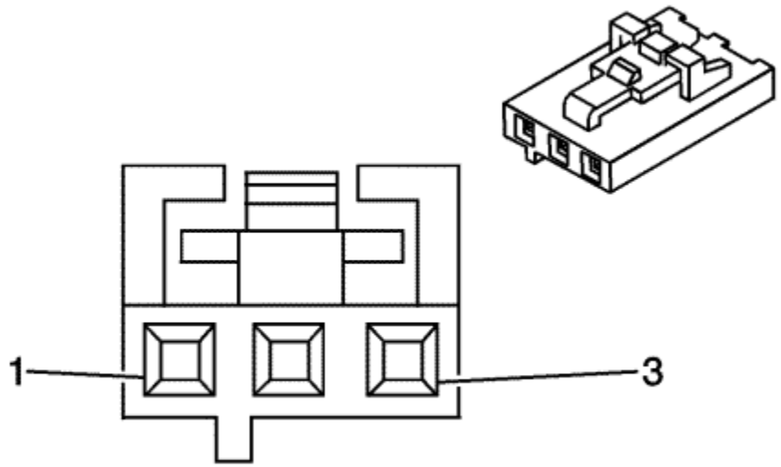

Connector Part Information

Harness Type: Outside Rear-view Mirror
OEM Connector: Not Available
Service Connector: Service by Assembly - See Parts catalogue
Description: 3-Way F (BK)

Terminal Part Information

Terminated Lead: Not Available
Release Tool: Service by Assembly - See Parts catalogue
Diagnostic Test Probe: Not Available

M77P Outside Rear-view Mirror Motor - Passenger

Pin	Size	Colour	Circuit	Function	Option
1	0.35	D-GN/WH	81	Right Mirror Motor Right Control	--
2	0.35	WH	329	Right Mirror Motor Supply Voltage	--
3	0.35	D-BU/WH	88	Right Mirror Motor-Up Control	-

© Copyright Chevrolet. All rights reserved

M80 Charge Port Door Actuator

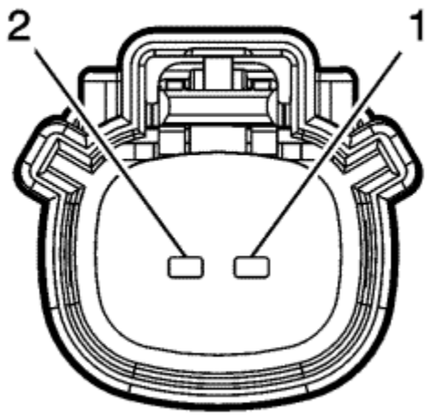

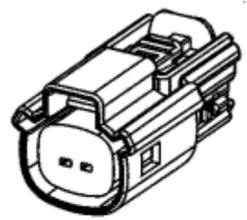

Connector Part Information

Harness Type: Forward Lamp
OEM Connector: 33471-0206
Service Connector: 13577534
Description: 2-Way F MX150 Series, Sealed (BK)

Terminal Part Information

Terminated Lead: Service by Connector Assembly - Pending
Release Tool: J-38125-217
Diagnostic Test Probe: J-35616-14 (GN)

M80 Charge Port Door Actuator

Pin	Size	Colour	Circuit	Function	Option
1	0.75	BK	1950	Ground	-
2	1	GY/L-GN	3696	Charge Port Door Actuator Supply Voltage	-

© Copyright Chevrolet. All rights reserved

Right Rear of Vehicle - Fuel Door Components

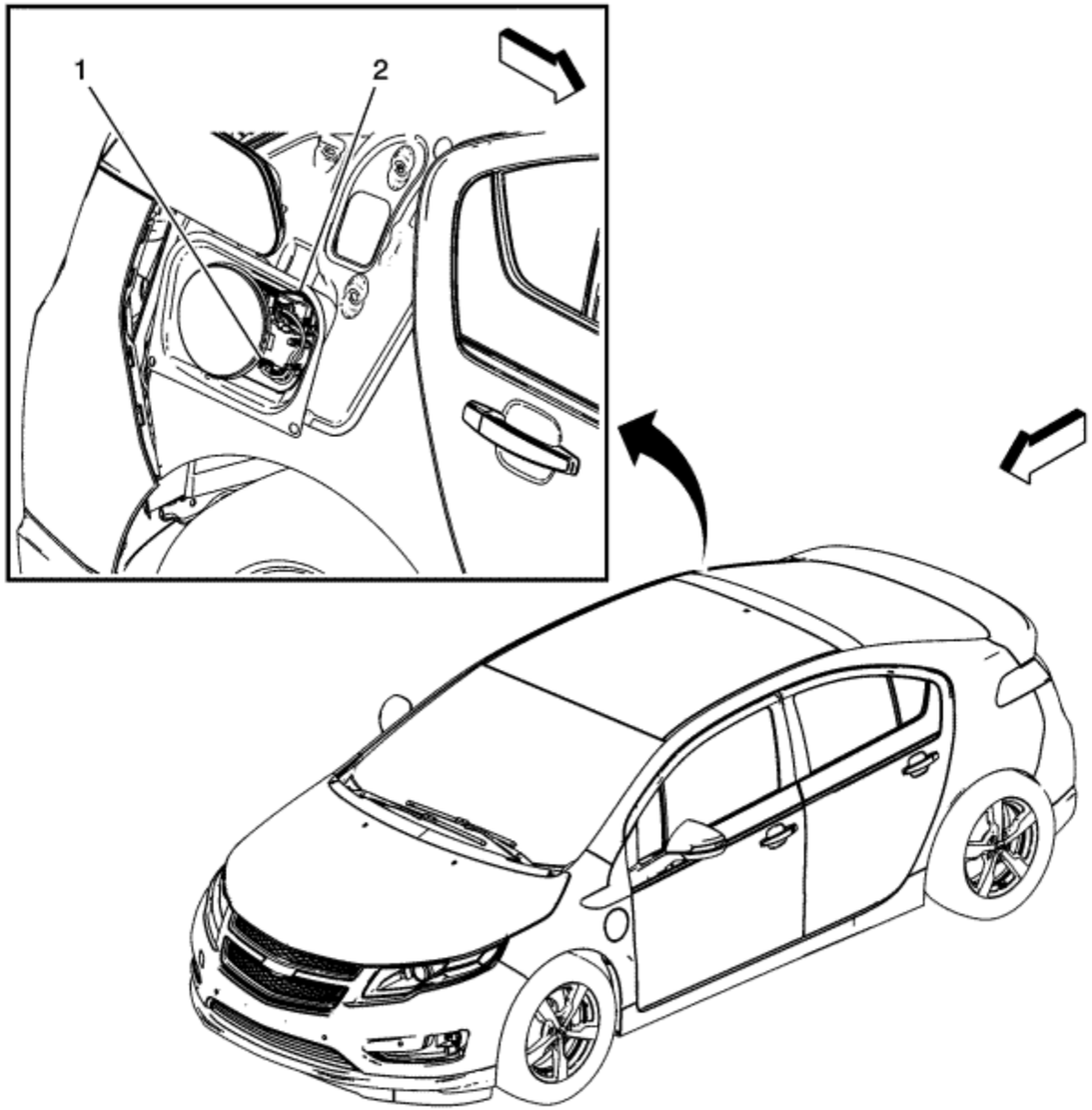

(1) P208 Fuel Door Status Switch Assembly
(2) M97 Fuel Door Lock Actuator

© Copyright Chevrolet. All rights reserved

M97 Fuel Door Lock Actuator

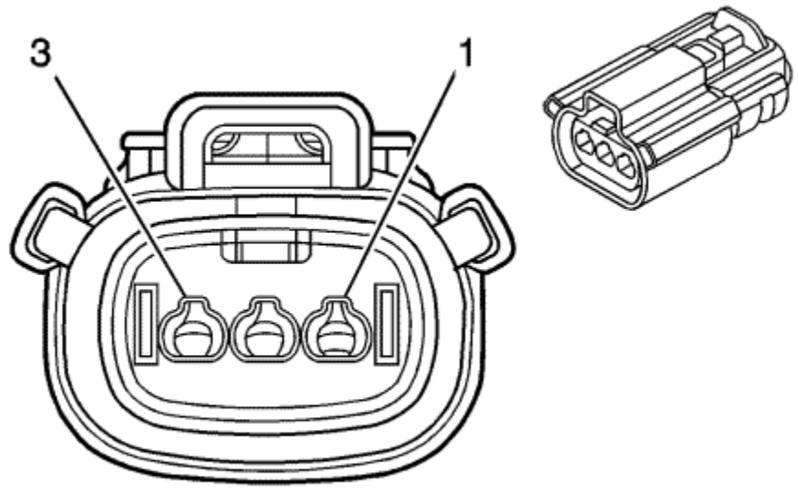

Connector Part Information

Harness Type: Body
OEM Connector: 33471-0307
Service Connector: 13577533
Description: 3-Way F MX150 Series, Sealed (L-GY)

Terminal Part Information

Terminated Lead: Service by Connector Assembly - Pending
Release Tool: J-38125-217
Diagnostic Test Probe: J-35616-14 (GN)

M97 Fuel Door Lock Actuator

Pin	Size	Colour	Circuit	Function	Option
1	0.5	L-BU/BK	6801	Fuel Door Lock/Unlock (1) Reference	-
2	0.5	L-BU	6800	Fuel Door Lock/Unlock (1) Signal	--
3	--	--	--	Not Used	--

© Copyright Chevrolet. All rights reserved

P12L Horn - Left

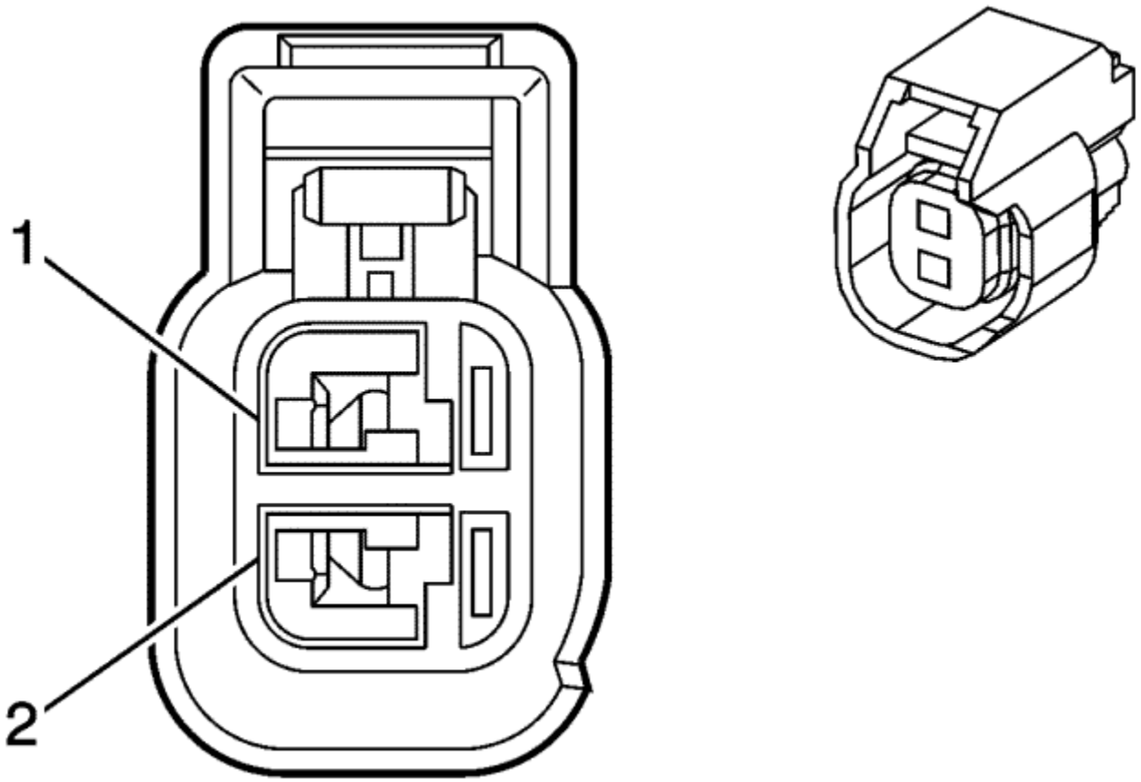

Connector Part Information

Harness Type: Forward Lamp
OEM Connector: E-6171-001
Service Connector: 13314096
Description: 2-Way F GT 150 Series, Sealed (BK)

Terminal Part Information

Terminated Lead: Service by Connector Assembly - 13314096
Release Tool: J-38125-553
Diagnostic Test Probe: J-35616-2A (GY)

P12L Horn - Left

Pin	Size	Colour	Circuit	Function	Option
1	1	BK	1150	Ground	-
2	1	BN/GY	29	Horn Control	-

© Copyright Chevrolet. All rights reserved

P12R Horn - Right

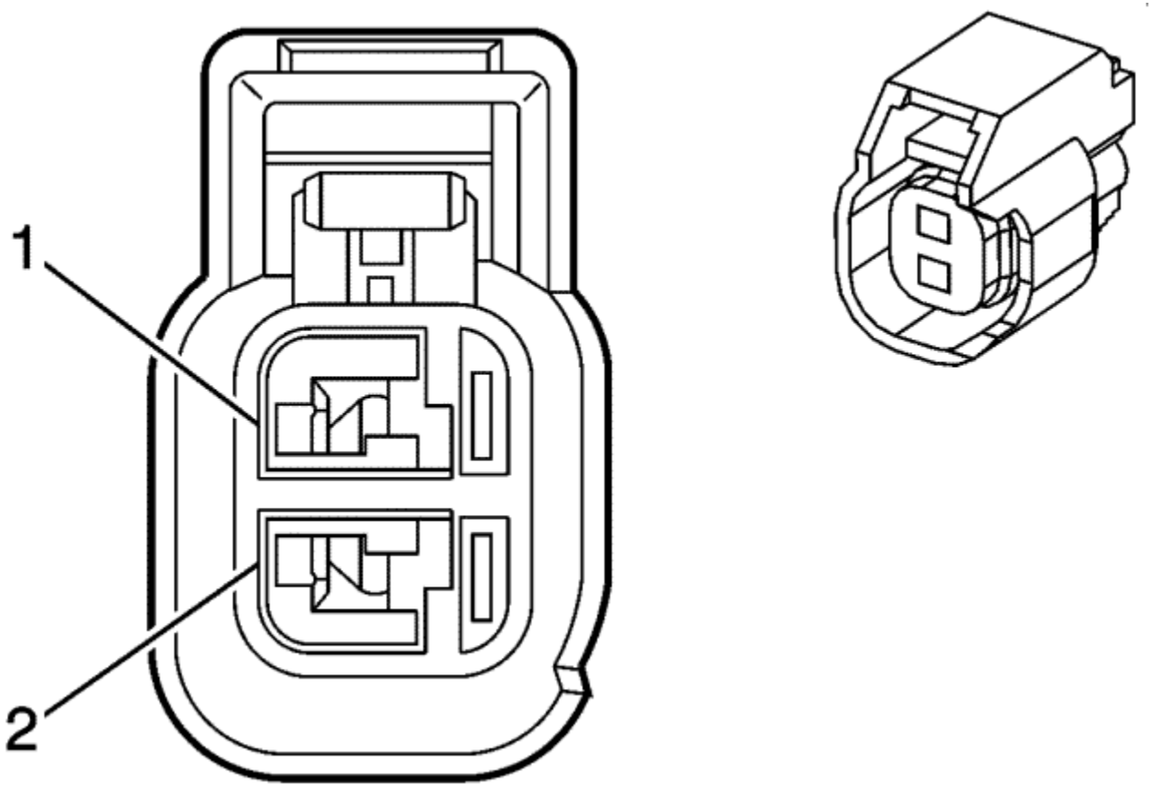

Connector Part Information

Harness Type: Forward Lamp
OEM Connector: E-6171-001
Service Connector: 13314096
Description: 2-Way F GT 150 Series, Sealed (BK)

Terminal Part Information

Terminated Lead: Service by Connector Assembly - 13314096
Release Tool: J-38125-553
Diagnostic Test Probe: J-35616-2A (GY)

P12R Horn - Right

Pin	Size	Colour	Circuit	Function	Option
1	1	BK	1050	Ground	-
2	1	BN/GY	29	Horn Control	-

© Copyright Chevrolet. All rights reserved

P14 Passenger Air bag Disable Indicator

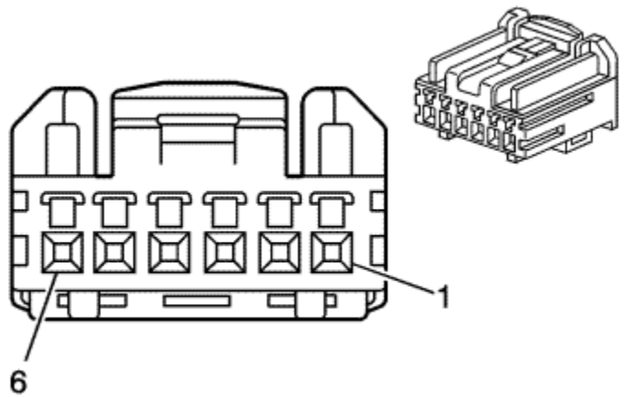

Connector Part Information

Harness Type: Headliner
OEM Connector: HCMPB-C06-S
Service Connector: 19153174
Description: 6-Way F HCM Series (WH)

Terminal Part Information

Terminated Lead: Service by Connector Assembly - 19153174
Release Tool: J-38125-12A
Diagnostic Test Probe: J-35616-64B (L-BU)

P14 Passenger Air bag Disable Indicator

Pin	Size	Colour	Circuit	Function	Option
1	0.35	L-BU	2307	Passenger Air Bag On Indicator Control	-
2	0.5	BK	1650	Ground	--
3	0.35	L-GN	2308	Passenger Air Bag Off Indicator Control	-
4	0.35	VT/L-GN	39	Run/Crank Ignition 1 Voltage	--
5	0.35	VT/WH	5234	Passenger Seat Belt Indicator	—
6	--	--	--	Not Used	--

© Copyright Chevrolet. All rights reserved

P16 Instrument Cluster

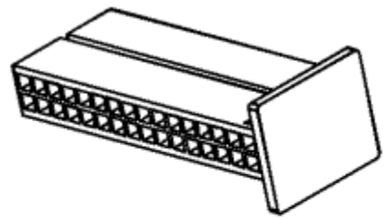

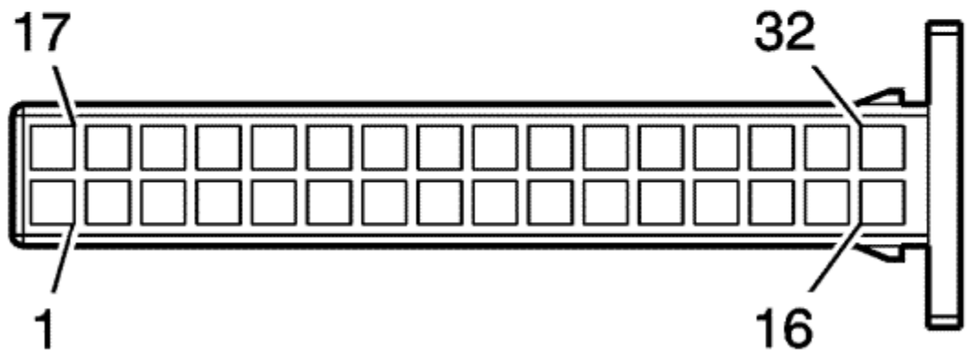

Connector Part Information

Harness Type: Instrument Panel
OEM Connector: 968265-1
Service Connector: 88988405
Description: 32-Way F 0.64 Quadlock Series (GY)

Terminal Part Information

Terminated Lead: Pins 8-10, 26, 28, 30 - 13575585
Terminated Lead: Pins 3, 17, 23, 29, 31 - 13575587
Release Tool: J-38125-12A
Diagnostic Test Probe: J-35616-64B (L-BU)

P16 Instrument Cluster

Pin	Size	Colour	Circuit	Function	Option
1-2	--	--	--	Not Used	--
3	0.5	RD/L-GN	502	Battery Positive Voltage	-
4-7	--	--	--	Not Used	--
8	0.35	YE/BN	3693	Driver Information Centre Switch Minus Signal	-
9	0.35	BK/BN	897	Low Reference	--
10	0.35	L-GN/WH	1358	Driver Information Centre Switch Signal	--
11-16	--	--	--	Not Used	--
17	0.5	L-GN	5060	Low Speed GMLAN Serial Data	-
18-22	--	--	--	Not Used	--
23	0.5	BK	1650	Ground	-
24-25	--	--	--	Not Used	-
26	0.35	BK/L-GN	3694	Low Reference	-
27	--	--	--	Not Used	--
28	0.35	GY/VT	3692	Driver Information Centre Switch Plus Signal	-
29	0.5	VT	185	Low Washer Fluid Indicator Control	-
30	0.35	BN/WH	419	Check Engine Indicator Control	-
31	0.5	VT/L-GN	39	Run/Crank Ignition 1 Voltage	-
32	--	--	--	Not Used	--

© Copyright Chevrolet. All rights reserved

P17 Info Display Module X1

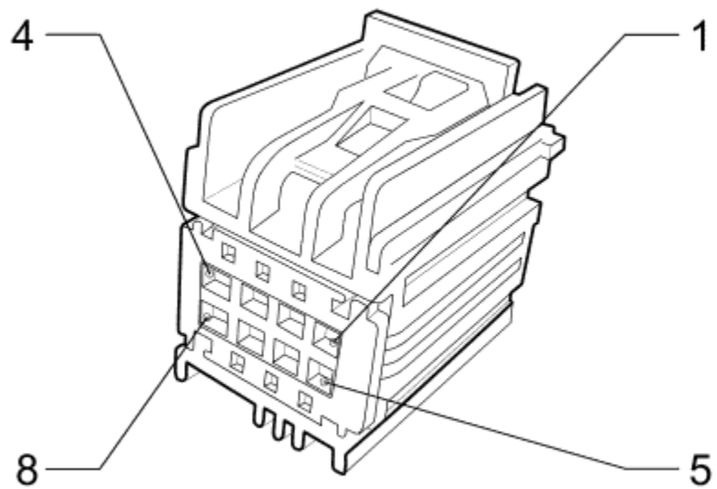

Connector Part Information

Harness Type: Instrument Panel
OEM Connector: 7283-9028-30
Service Connector: 13576542
Description: 8-Way F YESC Kaizen Series (BK)

Terminal Part Information

Terminated Lead: 13575845
Release Tool: J-38125-215A
Diagnostic Test Probe: J-35616-64B (L-BU)

P17 Info Display Module X1

Pin	Size	Colour	Circuit	Function	Option
1	0.75	RD/VT	5140	Battery Positive Voltage	-

2	0.5	BK	1650	Ground	--
3	--	--	--	Not Used	--
4	0.35	VT	3369	Touch Screen Display Signal (+)	-
5	0.35	BN/L-GN	3364	Navigation Display Reset Signal	--
6	0.5	L-GN/YE	7066	Entertainment Remote Enable Signal	-
7	0.5	BK	3368	Touch Screen Display Drain Wire	--
8	0.35	VT	3370	Touch Screen Display Signal (-)	-

© Copyright Chevrolet. All rights reserved

P19AC Speaker - Subwoofer

Connector Part Information

Harness Type: Body
OEM Connector: 15326870
Service Connector: 88953160
Description: 2-Way F GT 280 Series (BK)

Terminal Part Information

Terminated Lead: Service by Connector Assembly - 88953160
Release Tool: J-38125-553
Diagnostic Test Probe: J-35616-4A (PU)

P19AC Speaker - Subwoofer

Pin	Size	Colour	Circuit	Function	Option
A	1	L-GN/BK	1794	Left/Rear Subwoofer Speaker (-)	-
B	1	L-BU/GY	346	Left/Rear Subwoofer Speaker (+)	-

© Copyright Chevrolet. All rights reserved

P19AG Speaker - Left Front Door

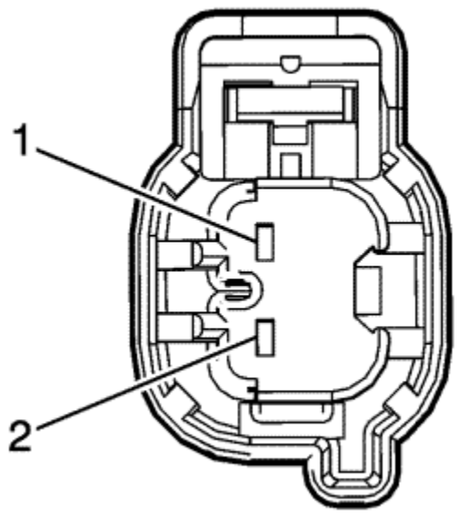

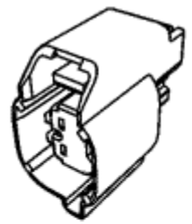

Connector Part Information

Harness Type: Driver Door
OEM Connector: R63461-002
Service Connector: 13504282
Description: 2-Way F GT 150 Series (L-GY)

Terminal Part Information

Terminated Lead: 13575735
Release Tool: J-38125-553
Diagnostic Test Probe: J-35616-2A (GY)

P19AG Speaker - Left Front Door

Pin	Size	Colour	Circuit	Function	Option
1	1	BN/L-BU	118	Left Front Speaker Signal (-)	-
2	1	L-BU	201	Left Front Speaker (+)	-

© Copyright Chevrolet. All rights reserved

P19AH Speaker - Right Front Door

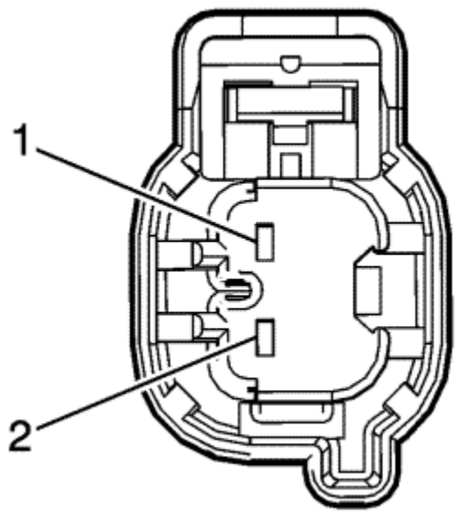

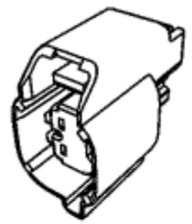

Connector Part Information

Harness Type: Passenger Door
OEM Connector: R63461-002
Service Connector: 13504282
Description: 2-Way F GT 150 Series (L-GY)

Terminal Part Information

Terminated Lead: 13575735
Release Tool: J-38125-553
Diagnostic Test Probe: J-35616-2A (GY)

P19AH Speaker - Right Front Door

Pin	Size	Colour	Circuit	Function	Option
1	0.75	BN/YE	117	Right Front Speaker Signal (-)	-
2	0.75	YE	200	Right Front Speaker (+)	-

© Copyright Chevrolet. All rights reserved

P19AL Speaker - Left Rear Door

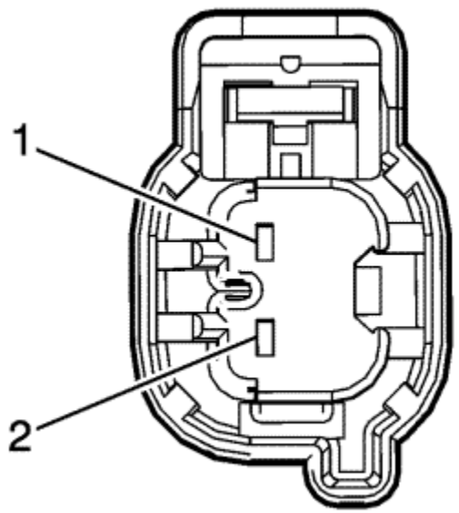

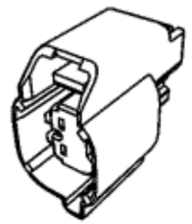

Connector Part Information

Harness Type: Left Rear Door
OEM Connector: R63461-002
Service Connector: 13504282
Description: 2-Way F GT 150 Series (L-GY)

Terminal Part Information

Terminated Lead: 13575735
Release Tool: J-38125-553
Diagnostic Test Probe: J-35616-2A (GY)

P19AL Speaker - Left Rear Door

Pin	Size	Colour	Circuit	Function	Option
1	0.75	BN/L-GN	116	Left Rear Speaker Signal (-)	-
2	0.75	L-GN	199	Left Rear Speaker (+)	-

© Copyright Chevrolet. All rights reserved

P19AM Speaker - Right Rear Door

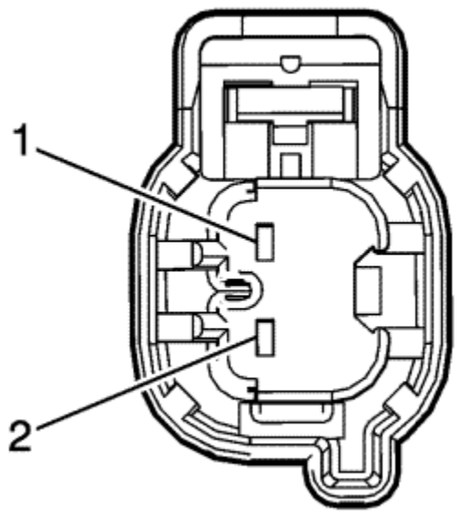

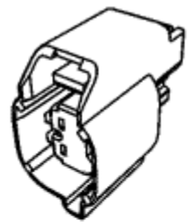

Connector Part Information

Harness Type: Right Rear Door
OEM Connector: R63461-002
Service Connector: 13504282
Description: 2-Way F GT 150 Series (L-GY)

Terminal Part Information

Terminated Lead: 13575735
Release Tool: J-38125-553
Diagnostic Test Probe: J-35616-2A (GY)

P19AM Speaker - Right Rear Door

Pin	Size	Colour	Circuit	Function	Option
1	0.75	WH/BN	115	Right Rear Speaker Signal (-)	-
2	0.75	WH	46	Right Rear Speaker (+)	-

© Copyright Chevrolet. All rights reserved

P19H Speaker - Left Front Tweeter

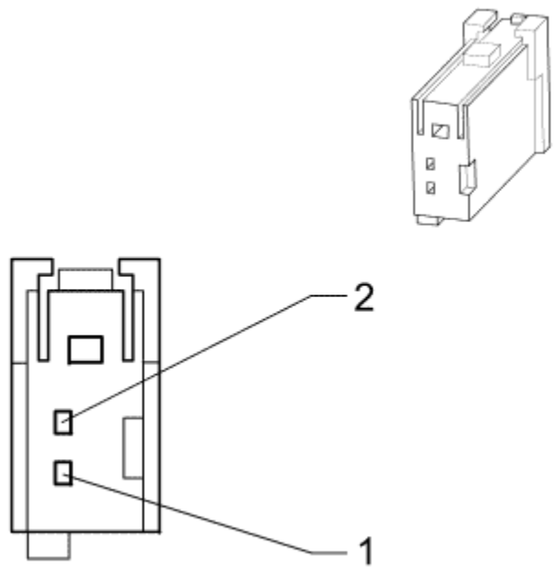

Connector Part Information

Harness Type: Instrument Panel
OEM Connector: AIT2PB-02A-1AK
Service Connector: 13314093
Description: 2-Way F 0.64 Series (BK)

Terminal Part Information

Terminated Lead: Service by Connector Assembly - 13314093
Release Tool: J-38125-215A
Diagnostic Test Probe: J-35616-64B (L-BU)

P19H Speaker - Left Front Tweeter

Pin	Size	Colour	Circuit	Function	Option
1	0.75	YE/GY	1956	Left Front Tweeter Speaker (-)	--

2	0.75	YE/L-BU	1856	Left Front Tweeter Speaker (+)	-

© Copyright Chevrolet. All rights reserved

P19V Speaker - Right Front Tweeter

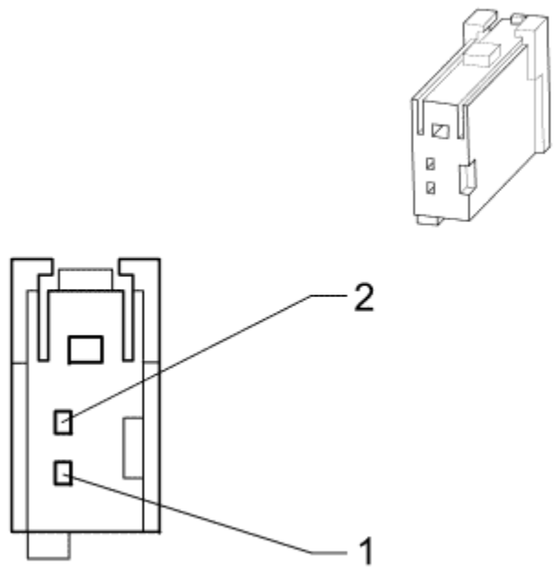

Connector Part Information

Harness Type: Instrument Panel
OEM Connector: AIT2PB-02A-1AK
Service Connector: 13314093
Description: 2-Way F 0.64 Series (BK)

Terminal Part Information

Terminated Lead: Service by Connector Assembly - 13314093
Release Tool: J-38125-215A
Diagnostic Test Probe: J-35616-64B (L-BU)

P19V Speaker - Right Front Tweeter

Pin	Size	Colour	Circuit	Function	Option
1	0.75	VT/BN	1952	Right Front Tweeter Speaker (-)	--

2	0.75	BN/L-GN	1852	Right Front Tweeter Speaker (+)	-

© Copyright Chevrolet. All rights reserved

P36 Battery State of Charge Indicator

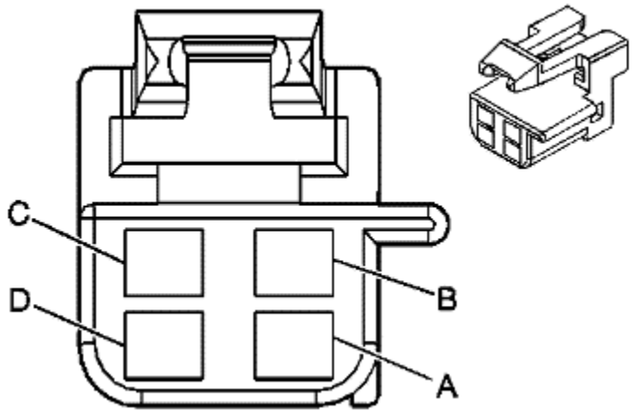

Connector Part Information

Harness Type: Instrument Panel Top Pad
OEM Connector: 12064760
Service Connector: 12085208
Description: 4-Way F Metri-Pack 150 Series (BK)

Terminal Part Information

Terminated Lead: 13575464
Release Tool: J-38125-12A
Diagnostic Test Probe: J-35616-14 (GN)

P36 Battery State of Charge Indicator

Pin	Size	Colour	Circuit	Function	Option
A	0.35	GY/L-GN	3957	Charging Pilot Signal Indicator Control	-
B	0.35	YE/VT	3956	Charging Status Indicator Control	-
C	0.35	BK/L-GN	3958	Low Reference	--
D	0.35	WH/BN	3955	Charging Complete Indicator Control	-

© Copyright Chevrolet. All rights reserved

Q6E Camshaft Position Actuator Solenoid Valve - Exhaust

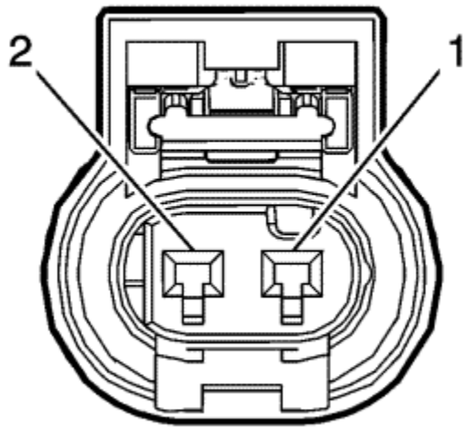

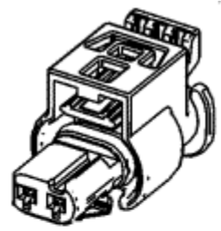

Connector Part Information

Harness Type: Engine
OEM Connector: 805-120-521
Service Connector: 13577537
Description: 2-Way F 1.2 MLK Series, Sealed (BK)

Terminal Part Information

Terminated Lead: Service by Connector Assembly - 13577537
Release Tool: Pending
Diagnostic Test Probe: Pending

Q6E Camshaft Position Actuator Solenoid Valve - Exhaust

Pin	Size	Colour	Circuit	Function	Option
1	0.5	BK/VT	6754	Low Reference	-
2	0.5	GY/L-BU	5282	Camshaft Phaser Exhaust Solenoid (1)	-

© Copyright Chevrolet. All rights reserved

Q6F Camshaft Position Actuator Solenoid Valve - Intake

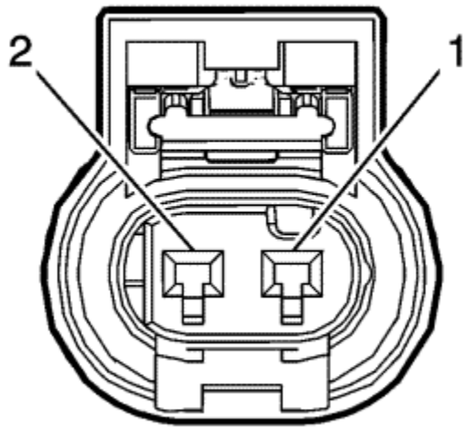

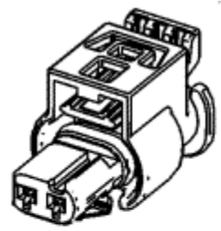

Connector Part Information

Harness Type: Engine
OEM Connector: 805-120-521
Service Connector: 13577537
Description: 2-Way F 1.2 MLK Series, Sealed (BK)

Terminal Part Information

Terminated Lead: Service by Connector Assembly - 13577537
Release Tool: Pending
Diagnostic Test Probe: Pending

Q6F Camshaft Position Actuator Solenoid Valve - Intake

Pin	Size	Colour	Circuit	Function	Option
1	0.5	BK/BN	6753	Low Reference	-
2	0.5	VT/BN	5284	Camshaft Phaser Intake Solenoid (1)	-

© Copyright Chevrolet. All rights reserved

Transmission Components

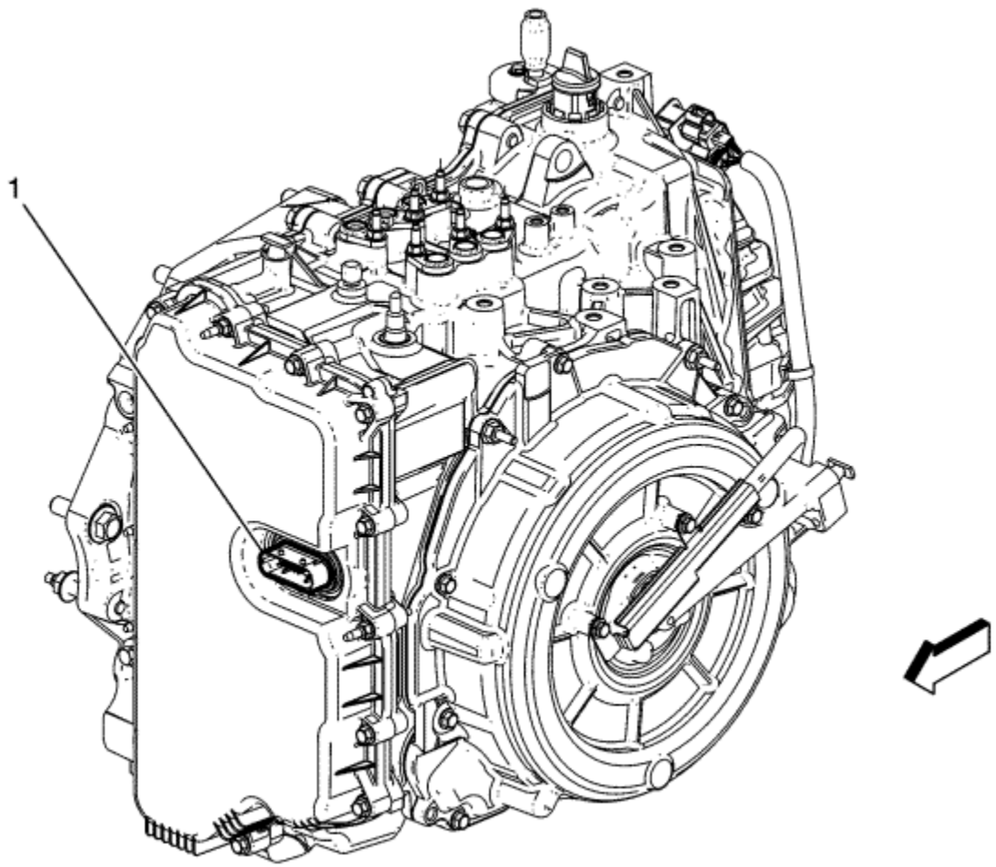

(1) Q8 Control Solenoid Valve Assembly

© Copyright Chevrolet. All rights reserved

Q8 Control Solenoid Valve Assembly X1

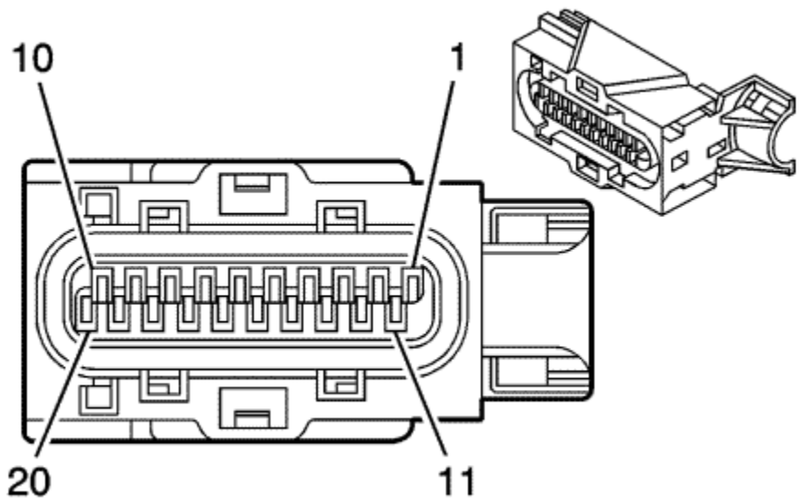

Connector Part Information

Harness Type: Engine
OEM Connector: 15476346
Service Connector: 19151494
Description: 20-Way F GT 150 Sealed (L-GY)

Terminal Part Information

Terminated Lead: Pins 1, 10, 18 - 13575400
Terminated Lead: Pins 2, 5, 12-15 - 13575433
Release Tool: J-38125-553
Diagnostic Test Probe: J-35616-2A (GY)

Q8 Control Solenoid Valve Assembly X1

Pin	Size	Colour	Circuit	Function	Option
1	0.75	BK	250	Ground	-
2	0.5	L-BU	2500	High Speed GMLAN Serial Data (+) (1)	-
3-4	--	--	--	Not Used	--
5	0.5	L-BU	2500	High Speed GMLAN Serial Data (+) (1)	-

6-9	--	--	--	Not Used	--
10	0.75	RD/YE	240	Battery Positive Voltage	-
11	--	--	--	Not Used	--
12	0.5	WH	2501	High Speed GMLAN Serial Data (-) (1)	-
13	0.5	VT/WH	239	Run/Crank Ignition 1 Voltage	--
14	0.5	WH	2501	High Speed GMLAN Serial Data (-) (1)	-
15	0.5	L-BU/WH	3977	Accessory Wake-up Serial Data 2	-
16-17	--	--	--	Not Used	--
18	0.75	BK	250	Ground	-
19-20	--	--	--	Not Used	-

© Copyright Chevrolet. All rights reserved

Q8 Control Solenoid Valve Assembly X2

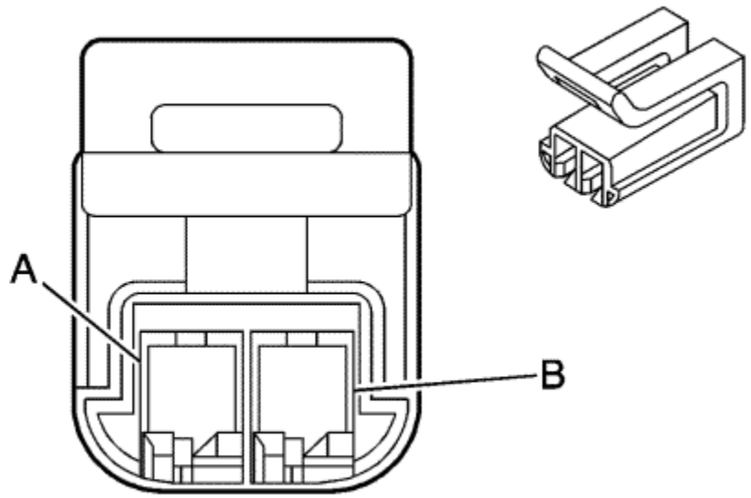

Connector Part Information

Harness Type: Transmission
OEM Connector: 15473844
Service Connector: Service by Harness - See Part Catalog
Description: 2-Way F Metri-Pack 150.2 Series (L-GN)

Terminal Part Information

Terminated Lead: Service by Harness - See Part Catalog
Release Tool: J-38125-559
Diagnostic Test Probe: J-35616-14 (GN)

Q8 Control Solenoid Valve Assembly X2

Pin	Size	Colour	Circuit	Function	Option
A	0.5	RD	908	Output Speed High-Signal Output	-
B	0.5	VT	909	Output Speed Low Signal	-

© Copyright Chevrolet. All rights reserved

Q8 Control Solenoid Valve Assembly X3

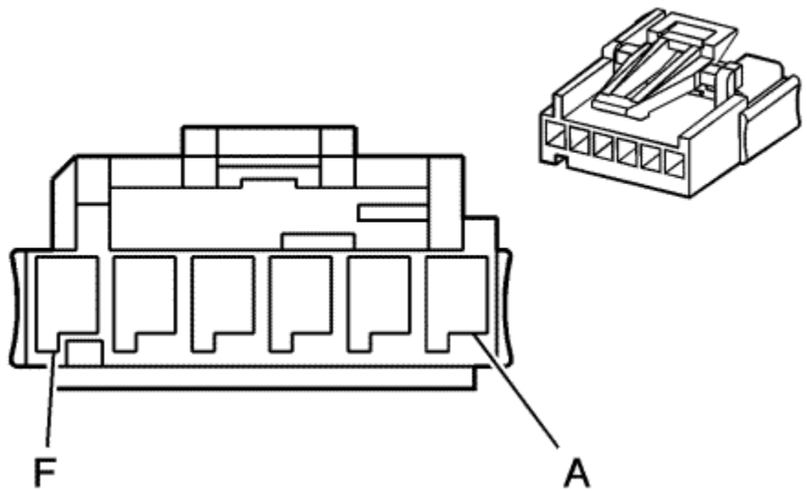

Connector Part Information

Harness Type: Transmission
OEM Connector: 15336500
Service Connector: 89046635
Description: 6-Way F Metri-Pack 150.2 Series (GN)

Terminal Part Information

Terminated Lead: Service by Harness - See Part Catalog
Release Tool: J-38125-559
Diagnostic Test Probe: J-35616-14 (GN)

Q8 Control Solenoid Valve Assembly X3

Pin	Size	Colour	Circuit	Function	Option
A	0.5	BK	915	Low Reference	-
B	0.5	YE	911	Transmission IMS Mode Switch P bit Signal	-
C	0.5	VT	912	Transmission IMS Mode Switch C bit Signal	--
D	0.5	L-BU	913	Transmission IMS Mode Switch B bit Signal	-

E	0.5	GY	914	Transmission IMS Mode Switch A bit Signal	-

© Copyright Chevrolet. All rights reserved

Q8 Control Solenoid Valve Assembly X4

Connector Part Information

Harness Type: Transmission
OEM Connector: 15467085
Service Connector: Service by Harness - See Part Catalog
Description: 2-Way F Metri-Pack 150.2 Series (L-GY)

Terminal Part Information

Terminated Lead: Service by Harness - See Part Catalog
Release Tool: J-38125-559
Diagnostic Test Probe: J-35616-14 (GN)

Q8 Control Solenoid Valve Assembly X4

Pin	Size	Colour	Circuit	Function	Option
A	0.5	RD	910	12V Reference	-
B	--	--	--	Not Used	--

© Copyright Chevrolet. All rights reserved

Q12 Evaporative Emissions Purge Solenoid Valve

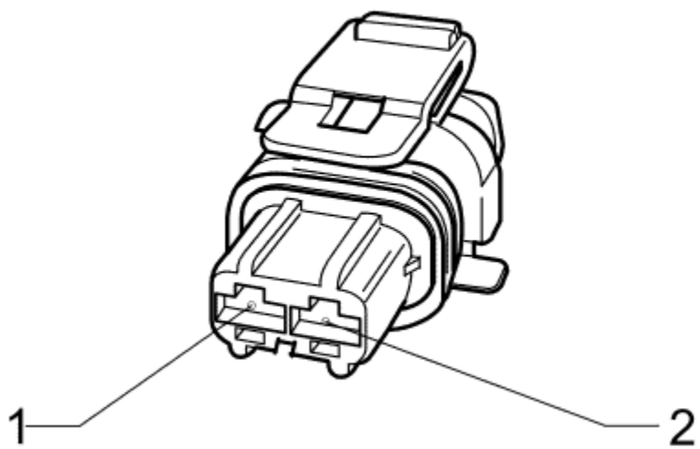

Connector Part Information

Harness Type: Engine
OEM Connector: 1928404072
Service Connector: 88988586
Description: 2-Way F 2.8 Junior Power Timer Series, Sealed (BK)

Terminal Part Information

Terminated Lead: Service by Connector Assembly - Pending
Release Tool: J-38125-561
Diagnostic Test Probe: J-35616-35 (VT)

Q12 Evaporative Emissions Purge Solenoid Valve

Pin	Size	Colour	Circuit	Function	Option
1	0.5	VT/L-BU	5293	Powertrain Main Relay Fused Supply (4)	-

2	0.5	L-GN/L-BU	428	EVAP Canister Purge Solenoid Control	-

© Copyright Chevrolet. All rights reserved

Q13 Evaporative Emission Vent Solenoid Valve

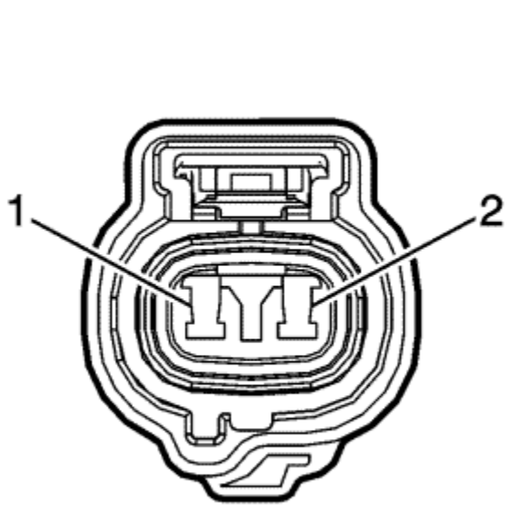

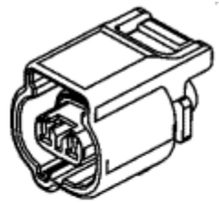

Connector Part Information

Harness Type: EVAP
OEM Connector: 7283-5062-30
Service Connector: Service by Harness - See Part Catalog
Description: 2-Way F 090 Series, Sealed (BK)

Terminal Part Information

Terminated Lead:
Release Tool: J-38125-552
Diagnostic Test Probe: J-35616-18 (BK)

Q13 Evaporative Emission Vent Solenoid Valve

Pin	Size	Colour	Circuit	Function	Option
1	0.5	L-GN	3726	Evaporative Emission Vent Solenoid Valve Earth	--
2	0.5	RD/WH	1340	Battery Positive Voltage	-

© Copyright Chevrolet. All rights reserved

Q17A Fuel Injector 1

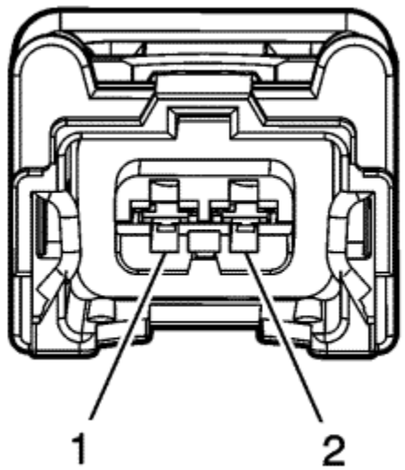

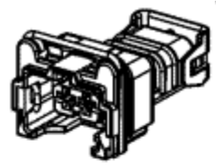

Connector Part Information

Harness Type: Engine
OEM Connector: PPI0001137
Service Connector: 13577536
Description: 2-Way F 2.8 DCS Series, Sealed (BK)

Terminal Part Information

Terminated Lead: Service by Connector Assembly - 13577536
Release Tool: J-38125-557
Diagnostic Test Probe: J-35616-4A (PU)

Q17A Fuel Injector 1

Pin	Size	Colour	Circuit	Function	Option
1	0.5	VT/L-BU	5291	Powertrain Main Relay Fused Supply (2)	-
2	0.5	BN/VT	1744	Fuel Injector Control (1)	-

© Copyright Chevrolet. All rights reserved

Q17B Fuel Injector 2

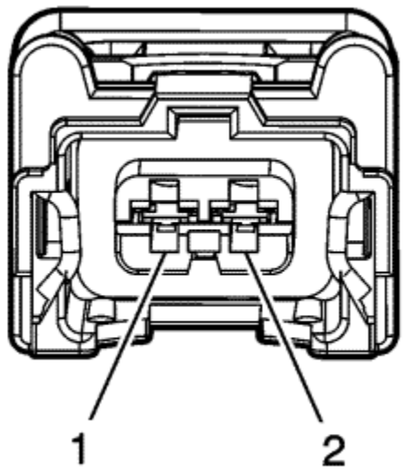

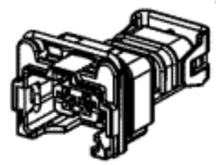

Connector Part Information

Harness Type: Engine
OEM Connector: PPI0001137
Service Connector: 13577536
Description: 2-Way F 2.8 DCS Series, Sealed (BK)

Terminal Part Information

Terminated Lead: Service by Connector Assembly - 13577536
Release Tool: J-38125-557
Diagnostic Test Probe: J-35616-4A (PU)

Q17B Fuel Injector 2

Pin	Size	Colour	Circuit	Function	Option
1	0.5	VT/L-BU	5291	Powertrain Main Relay Fused Supply (2)	-
2	0.5	YE/WH	1745	Fuel Injector Control (2)	-

© Copyright Chevrolet. All rights reserved

Q17C Fuel Injector 3

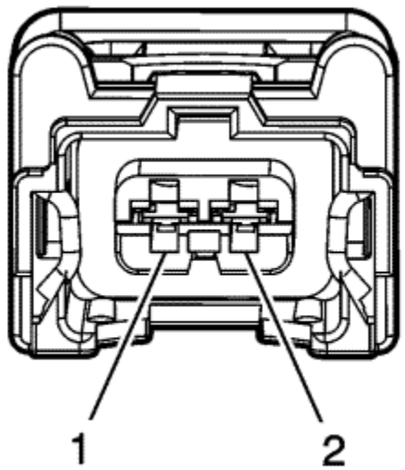

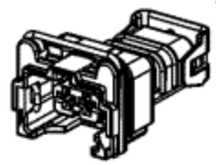

Connector Part Information

Harness Type: Engine
OEM Connector: PPI0001137
Service Connector: 13577536
Description: 2-Way F 2.8 DCS Series, Sealed (BK)

Terminal Part Information

Terminated Lead: Service by Connector Assembly - 13577536
Release Tool: J-38125-557
Diagnostic Test Probe: J-35616-4A (PU)

Q17C Fuel Injector 3

Pin	Size	Colour	Circuit	Function	Option
1	0.5	VT/L-BU	5291	Powertrain Main Relay Fused Supply (2)	-
2	0.5	BN/VT	1746	Fuel Injector Control (3)	-

© Copyright Chevrolet. All rights reserved

Q17D Fuel Injector 4

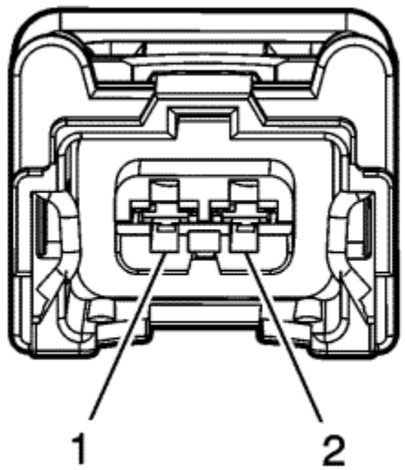

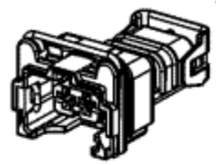

Connector Part Information

Harness Type: Engine
OEM Connector: PPI0001137
Service Connector: 13577536
Description: 2-Way F 2.8 DCS Series, Sealed (BK)

Terminal Part Information

Terminated Lead: Service by Connector Assembly - 13577536
Release Tool: J-38125-557
Diagnostic Test Probe: J-35616-4A (PU)

Q17D Fuel Injector 4

Pin	Size	Colour	Circuit	Function	Option
1	0.5	VT/L-BU	5291	Powertrain Main Relay Fused Supply (2)	-
2	0.5	BN/YE	844	Fuel Injector Control (4)	-

© Copyright Chevrolet. All rights reserved

Q38 Throttle Body

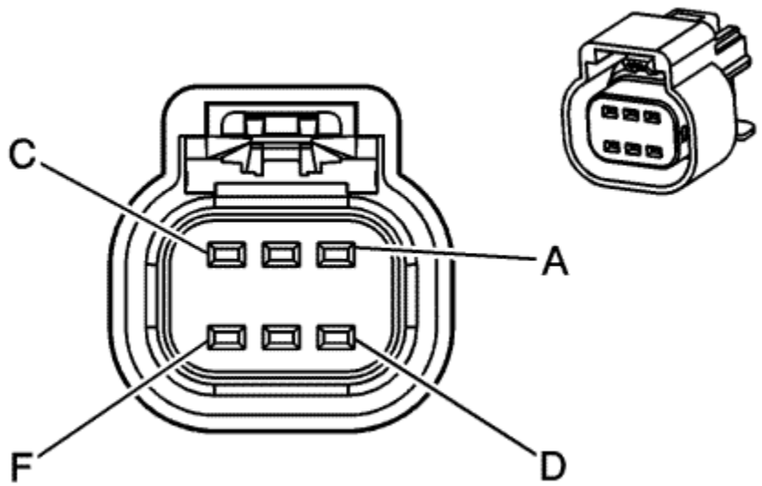

Connector Part Information

Harness Type: Engine
OEM Connector: 15418497
Service Connector: 13504128
Description: 6-Way F GT 150 Series Sealed (BK)

Terminal Part Information

Terminated Lead: Service by Connector Assembly - 13504128
Release Tool: J-38125-553
Diagnostic Test Probe: J-35616-2A (GY)

Q38 Throttle Body

Pin	Size	Colour	Circuit	Function	Option
A	0.5	BN/WH	582	Throttle Actuator Control Close	-
B	0.5	YE	581	Throttle Actuator Control Open	--
C	0.5	BK/BN	2752	Low Reference	--
D	0.5	BN/L-GN	485	Throttle Position Sensor Signal (1)	-

E	0.5	BN/RD	2701	5 Volt Reference	-
F	0.5	BN/L-BU	486	Throttle Position Sensor Signal (2)	-

© Copyright Chevrolet. All rights reserved

Q63 Evaporative Emission System Leak Detection Pump Assembly

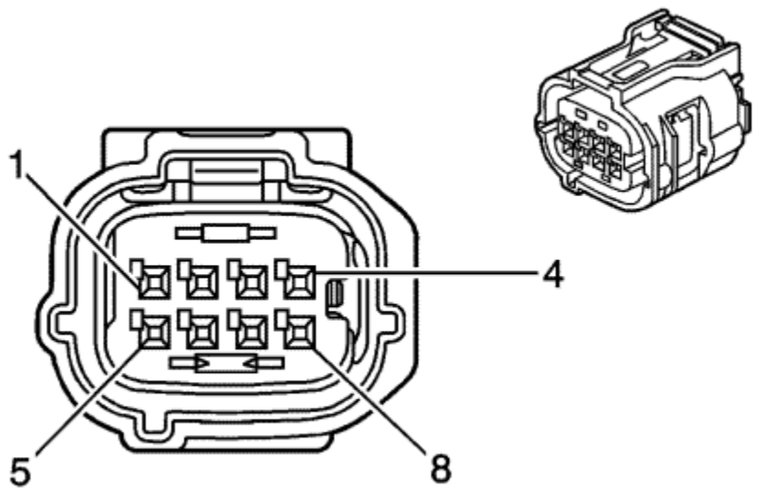

Connector Part Information

Harness Type: EVAP
OEM Connector: 6189-1240
Service Connector: Service by Harness - See Part Catalog
Description: 8-Way F TS Series, Sealed (D-GY)

Terminal Part Information

Terminated Lead:
Release Tool: J-38125-553
Diagnostic Test Probe: J-35616-64B (L-BU)

Q63 Evaporative Emission System Leak Detection Pump Assembly

Pin	Size	Colour	Circuit	Function	Option
1	0.5	GY	3723	Evaporative Emission System Leak Detection Pump Assembly Change-over Valve Earth	-
2	--	--	--	Not Used	--
3	0.5	RD/WH	1340	Battery Positive Voltage	-
4	0.5	L-BU	3722	Evaporative Emission System Leak Detection Pump Assembly Vacuum Pump Earth	--

5	0.5	RD/WH	1340	Battery Positive Voltage	-
6	0.5	BN/RD	3724	Evaporative Emission System Leak Detection Pump Assembly Pressure Sensor Voltage Reference	--
7	0.5	L-BU/L-GN	3725	Evaporative Emission System Leak Detection Pump Assembly Pressure Sensor Signal	--
8	0.5	BK/L-GN	6281	Low Reference	-

© Copyright Chevrolet. All rights reserved

Q65 Hybrid Battery Pack Coolant Control Valve

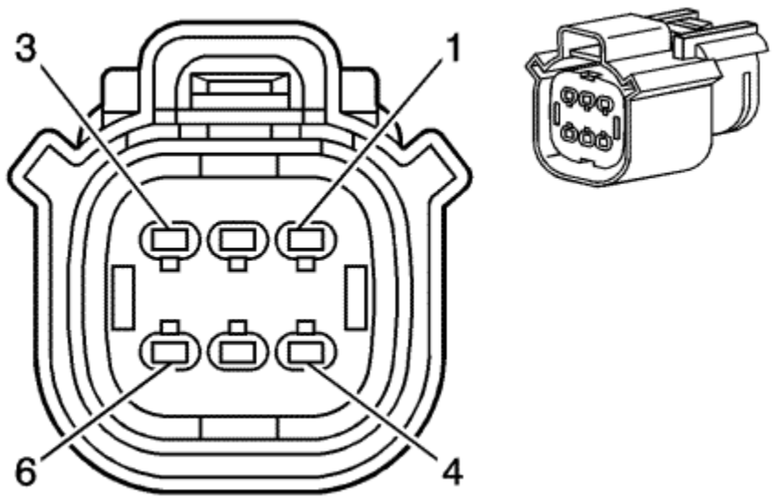

Connector Part Information

Harness Type: Body
OEM Connector: 33472-0611
Service Connector: 19178087
Description: 6-Way F MX150 Series, Sealed (BK)

Terminal Part Information

Terminated Lead: Service by Connector Assembly - 19178087
Release Tool: J-38125-217
Diagnostic Test Probe: J-35616-14 (GN)

Q65 Hybrid Battery Pack Coolant Control Valve

Pin	Size	Colour	Circuit	Function	Option
1	0.5	L-BU/VT	3818	Rechargeable Energy Storage System Coolant HVAC Mode Motor High Control	-
2	0.5	WH/YE	3819	Rechargeable Energy Storage System Coolant HVAC Mode Motor Low Control	--
3	--	--	--	Not Used	--
4	0.5	L-GN/YE	3822	Rechargeable Energy Storage System Coolant HVAC Mode Sensor Signal	--

5	0.5	BK/GY	3820	Low Reference	--
6	0.5	VT/RD	3821	Rechargeable Energy Storage System Coolant HVAC Mode Sensor High Reference	-

© Copyright Chevrolet. All rights reserved

Q66 Passenger Compartment Heater Coolant Control Valve

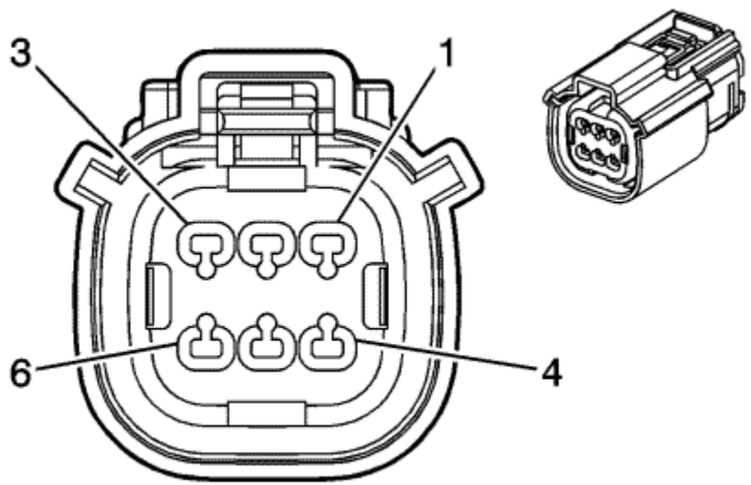

Connector Part Information

Harness Type: Body
OEM Connector: 33472-0601
Service Connector: 19178087
Description: 6-Way F MX150 Series, Sealed (BK)

Terminal Part Information

Terminated Lead: Service by Connector Assembly - 19178087
Release Tool: J-38125-217
Diagnostic Test Probe: J-35616-14 (GN)

Q66 Passenger Compartment Heater Coolant Control Valve

Pin	Size	Colour	Circuit	Function	Option
1	0.75	RD/WH	3440	Battery Positive Voltage	-
2	0.5	YE/L-BU	5125	Heater Solenoid Valve Control	--
3	0.5	WH/RD	596	5 Volt Reference	-
4	0.5	VT/BN	2028	Coolant Valve Position Sensor Signal	--

5	0.5	BK/L-BU	720	Low Reference	--
6	0.5	BK	2050	Ground	-

© Copyright Chevrolet. All rights reserved

S3 Transmission Shift Lever

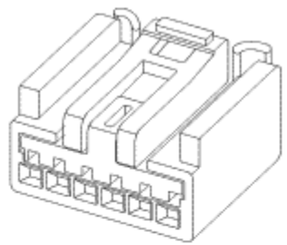

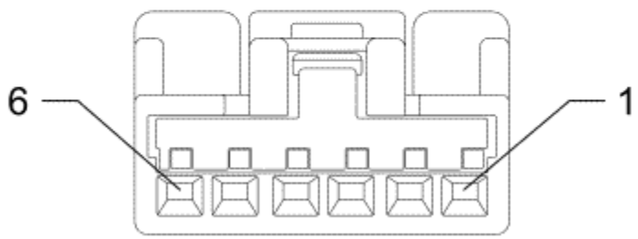

Connector Part Information

Harness Type: Instrument Panel
OEM Connector: AIT2PB-06-1AK
Service Connector: 19167753
Description: 6-Way F AIT II Series (BK)

Terminal Part Information

Terminated Lead: 13575845
Release Tool: J-38125-215A
Diagnostic Test Probe: J-35616-64B (L-BU)

S3 Transmission Shift Lever

Pin	Size	Colour	Circuit	Function	Option
1	--	--	--	Not Used	--

2	0.5	BK	2150	Ground	--
3	--	--	--	Not Used	--
4	0.35	VT/BK	7553	Park Lock Solenoid Control	--
5	--	--	--	Not Used	--
6	0.35	WH/VT	5905	Key Capture/Column Lock Shift Position Signal	-

© Copyright Chevrolet. All rights reserved

S15 Hybrid Battery Pack High-Voltage Manual Disconnect Lever X1

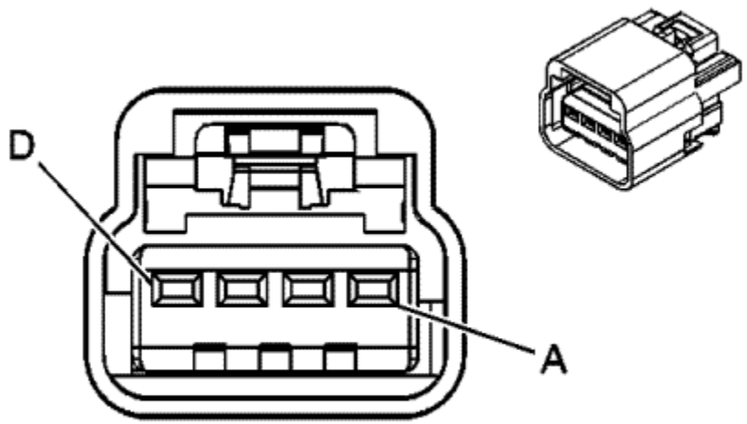

Connector Part Information

Harness Type: Hybrid Battery
OEM Connector: 15332135
Service Connector: 15306414
Description: 4-Way F GT 150 Series (BK)

Terminal Part Information

Terminated Lead: 13575735
Release Tool: J-38125-553
Diagnostic Test Probe: J-35616-2A (GY)

S15 Hybrid Battery Pack High-Voltage Manual Disconnect Lever X1

Pin	Size	Colour	Circuit	Function	Option
A	0.5	VT	5087	High-Voltage Interlock Loop Signal (1)	-
B	0.5	VT/WH	5087	High-Voltage Interlock Loop Signal (1)	-
C	0.5	GY/VT	5595	High-Voltage Interlock Loop Signal (2)	--
D	0.5	GY	5595	High-Voltage Interlock Loop Signal (2)	-

© Copyright Chevrolet. All rights reserved

S15 Hybrid/EV Battery Pack High Voltage Manual Disconnect Lever X2

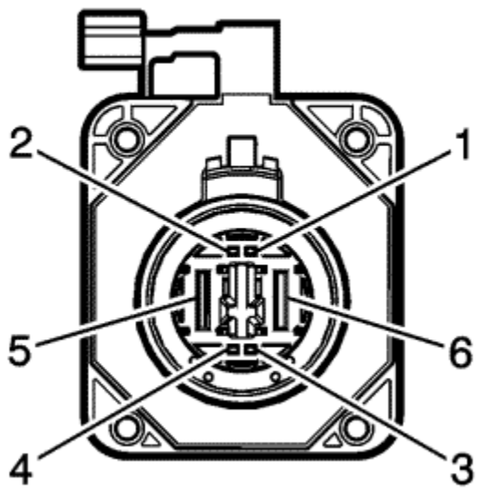

Connector Part Information

Harness Type: Hybrid/EV Battery Pack High-Voltage Manual Disconnect Lever
OEM Connector: Not Available
Service Connector: Service by Component Assembly - See Parts Catalogue
Description: 6-Way F (OG)

Terminal Part Information

Terminated Lead:Service by Component Assembly - See Parts Catalogue
Release Tool: Not Available
Diagnostic Test Probe: Pending

S15 Hybrid/EV Battery Pack High Voltage Manual Disconnect Lever X2

Pin	Size	Colour	Circuit	Function	Option
1	--	--	--	High-Voltage Interlock Loop Signal (1)	-
2	--	--	--	High-Voltage Interlock Loop Signal (1)	--
3	--	--	--	High-Voltage Interlock Loop Signal (2)	--

4	--	--	--	High-Voltage Interlock Loop Signal (2)	--
5	--	--	--	300 V - High Voltage	—
6	--	--	--	300 V - High Voltage	-

© Copyright Chevrolet. All rights reserved

S16 Driver Information Centre Switch

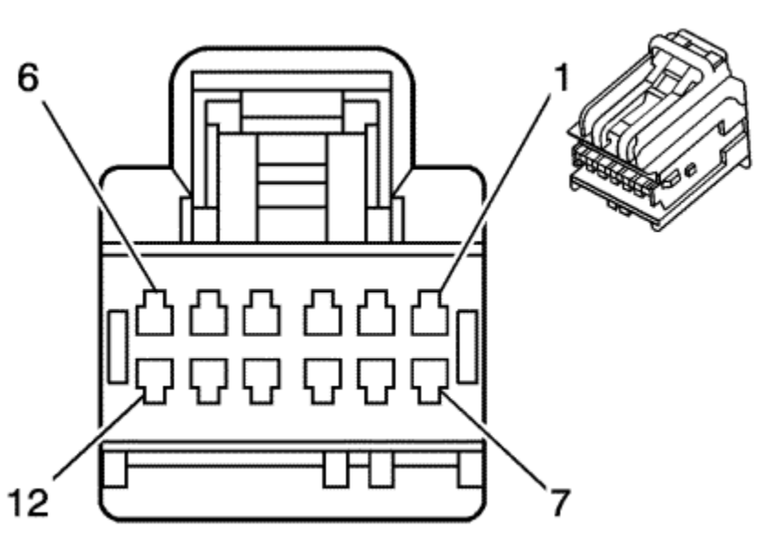

Connector Part Information

Harness Type: Instrument Panel
OEM Connector: 31410-1121
Service Connector: 19151154
Description: 12-Way F 64 Series, Sealed (GY)

Terminal Part Information

Terminated Lead: 13575845
Release Tool: J-38125-215A
Diagnostic Test Probe: J-35616-64B (L-BU)

S16 Driver Information Centre Switch

Pin	Size	Colour	Circuit	Function	Option
1	0.35	L-GN/WH	1358	Driver Information Centre Switch Signal	--
2	0.35	BK/BN	897	Low Reference	--
3	0.35	YE	6817	LED Backlight Dimming Control	-
4	0.5	BK	1750	Ground	-

5	0.35	GY/VT	3692	Driver Information Centre Switch Plus Signal	--
6	0.35	YE/BN	3693	Driver Information Centre Switch Minus Signal	--
7	0.35	BK/L-GN	3694	Low Reference	-
8-9	--	--	--	Not Used	--
10	0.35	YE/GY	44	Instrument Panel Lamp Dimmer Switch Signal	--
11	0.35	L-GN/RD	812	12 Volt Reference	-
12	0.35	BK/YE	5005	Low Reference	-

© Copyright Chevrolet. All rights reserved

S25 Garage Door Opener

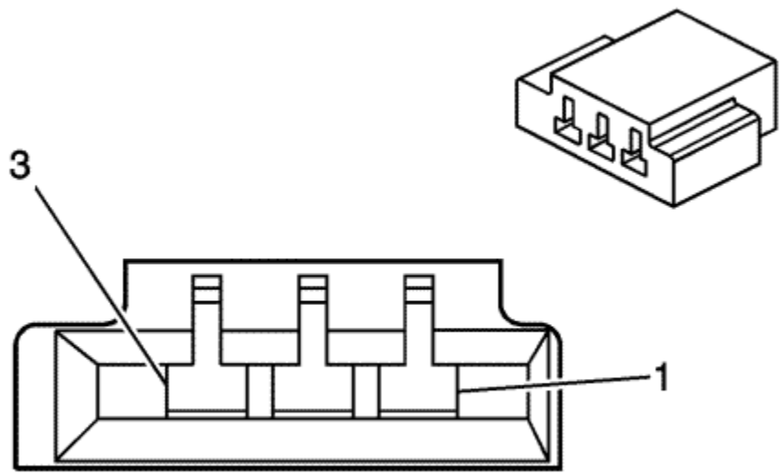

Connector Part Information

Harness Type: Headliner
OEM Connector: 09-01-6038
Service Connector: Pending
Description: 3-Way F Metri-Pack 150 Series (NA)

Terminal Part Information

Terminated Lead: Service by Connector Assembly - Pending
Release Tool: Pending
Diagnostic Test Probe: Pending

S25 Garage Door Opener

Pin	Size	Colour	Circuit	Function	Option
1	0.35	RD/YE	740	Battery Positive Voltage	--
2	0.35	YE	6817	LED Backlight Dimming Control	--
3	0.35	BK	1650	Ground	-

© Copyright Chevrolet. All rights reserved

S46 Tailgate Handle Switch

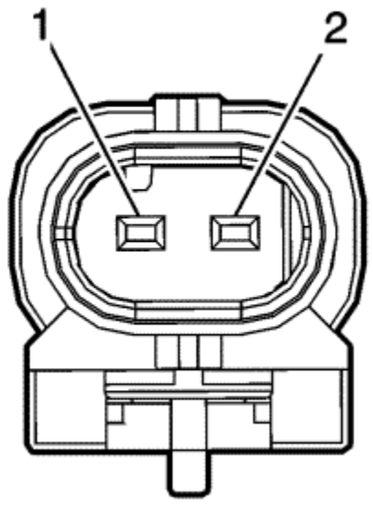

Connector Part Information

Harness Type: Liftgate
OEM Connector: 1-1703498-3
Service Connector: Service by Harness - See Part Catalog
Description: 2-Way M 1.2 MLK Series, Sealed (BK)

Terminal Part Information

Terminated Lead: Service by Harness - See Part Catalog
Release Tool: Service by Harness - See Part Catalog
Diagnostic Test Probe: Pending

S46 Tailgate Handle Switch

Pin	Size	Colour	Circuit	Function	Option
1	0.5	YE/L-BU	5797	Rear Closure Handle Switch Open Signal	-
2	0.5	BK	650	Ground	-

© Copyright Chevrolet. All rights reserved

S48B Multi-Function Switch - Overhead Console

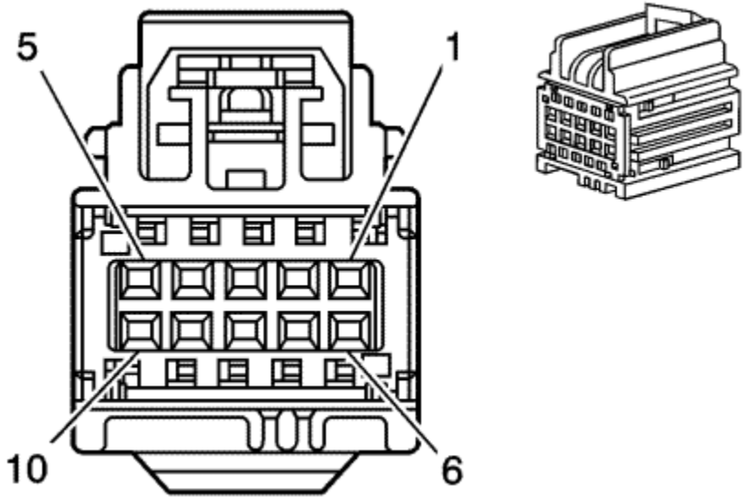

Connector Part Information

Harness Type: Headliner
OEM Connector: 7283-9040-30
Service Connector: 15127042
Description: 10-Way F 0.64 YESC Kaizen Series (BK)

Terminal Part Information

Terminated Lead: 13575845
Release Tool: J-38125-215A
Diagnostic Test Probe: J-35616-64B (L-BU)

S48B Multi-Function Switch - Overhead Console

Pin	Size	Colour	Circuit	Function	Option
1	0.35	YE	6817	LED Backlight Dimming Control	-
2	0.35	BK	1650	Ground	--
3	0.35	WH	6816	Indicator Dimming Control	--
4	--	--	--	Not Used	--

5	0.35	GY/L-GN	2555	Rear Park Assist Disable Signal	--
6	0.35	L-GN/BN	5852	Rear Park Assist LED Disable Signal	-
7-10	--	--	--	Not Used	--

© Copyright Chevrolet. All rights reserved

S51 Telematics Button Assembly

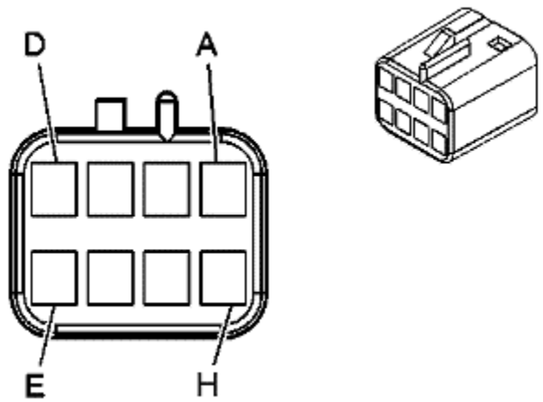

Connector Part Information

Harness Type: Headliner
OEM Connector: 12047886
Service Connector: 12101822
Description: 8-Way F Metri-Pack 150 Series (BK)

Terminal Part Information

Terminated Lead: Service by Connector Assembly - 12101822
Release Tool: J-38125-12A
Diagnostic Test Probe: J-35616-14 (GN)

S51 Telematics Button Assembly

Pin	Size	Colour	Circuit	Function	Option
A	0.35	L-GN/BK	2515	Keypad Supply Voltage	-
B	0.35	L-GN/WH	2514	Keypad Signal	-
C-D	--	--	--	Not Used	--
E	0.35	BK	1650	Ground	-
F	0.35	YE/VT	2516	Keypad Green LED	-
G	0.35	BN/WH	2517	Keypad Red LED	--

H	--	--	--	Not Used	--

© Copyright Chevrolet. All rights reserved

S52 Outside Rear-view Mirror Switch

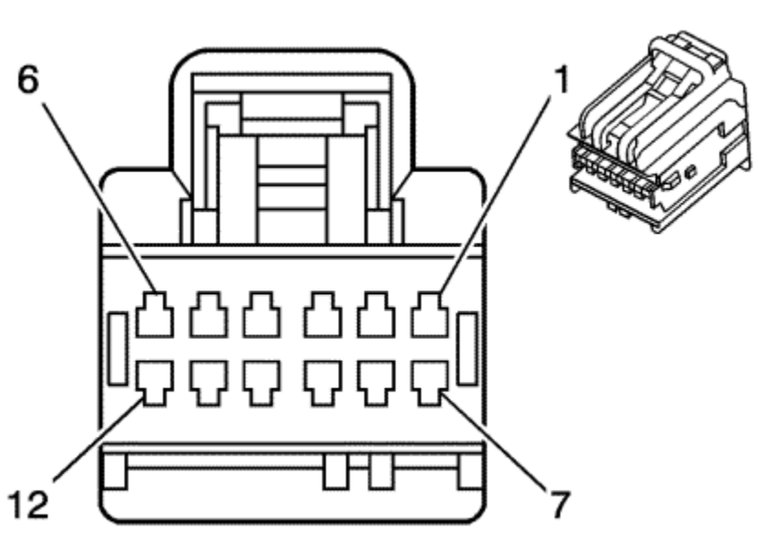

Connector Part Information

Harness Type: Driver Door Trim
OEM Connector: 31410-1121
Service Connector: 19151154
Description: 12-Way F 64 Series, Sealed (GY)

Terminal Part Information

Terminated Lead: 13575845
Release Tool: J-38125-215A
Diagnostic Test Probe: J-35616-64B (L-BU)

S52 Outside Rear-view Mirror Switch

Pin	Size	Colour	Circuit	Function	Option
1	0.5	YE	6817	LED Backlight Dimming Control	-
2-4	--	--	--	Not Used	--
5	0.35	YE/WH	330	Right Mirror Motor Supply Voltage	--
6	0.35	GY/VT	329	Left Mirror Motor Supply Voltage	--

7	0.35	BN/WH	1498	Right Mirror Motor-Up Control	--
8	0.35	YE/L-GN	88	Left Mirror Motor Up Control	-
9	0.35	L-BU	881	Right Mirror Motor Right Control	--
10	0.35	L-GN	81	Left Mirror Motor Right Control	--
11	0.35	BK	1550	Ground	--
12	0.5	RD/WH	4740	Battery Positive Voltage	-

© Copyright Chevrolet. All rights reserved

S70L Steering Wheel Controls Switch - Left

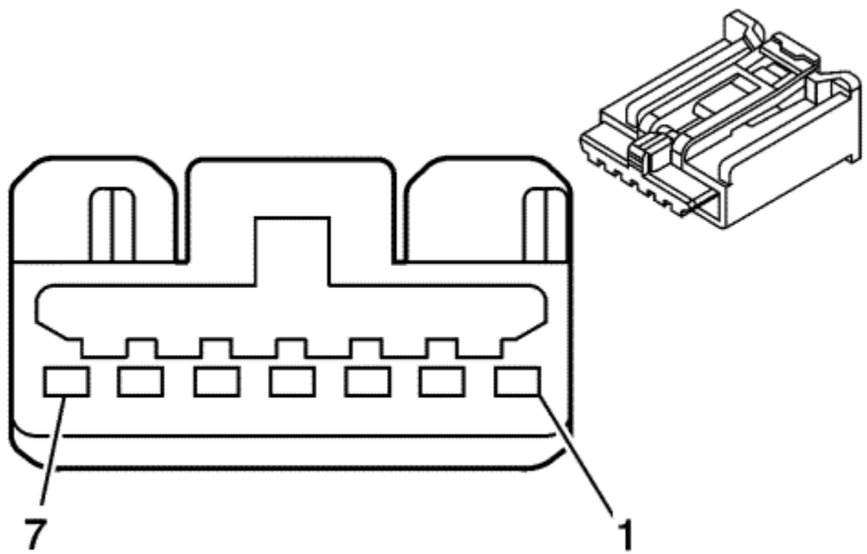

Connector Part Information

Harness Type: Steering Wheel
OEM Connector: AIT2PB-07-1FS
Service Connector: Service by Harness - See Part Catalog
Description: 7-Way F AIT II Series (NA)

Terminal Part Information

Terminated Lead: 13575867
Release Tool: J-38125-215A
Diagnostic Test Probe: J-35616-64B (L-BU)

S70L Steering Wheel Controls Switch - Left

Pin	Size	Colour	Circuit	Function	Option
1	0.35	WH/RD	1444	12 Volt Reference	-
2	--	--	--	Not Used	--
3	0.35	BN/D-GN	1884	Cruise Control Set/Coast/Resume/Accelerate Switch Signal	-

4-5	--	--	--	Not Used	--
6	0.35	YE	6817	LED Backlight Dimming Control	-
7	0.35	BK	1650	Ground	-

© Copyright Chevrolet. All rights reserved

S70R Steering Wheel Controls Switch - Right

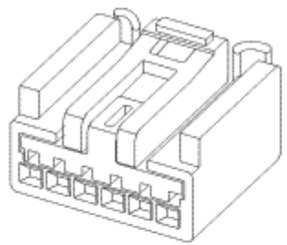

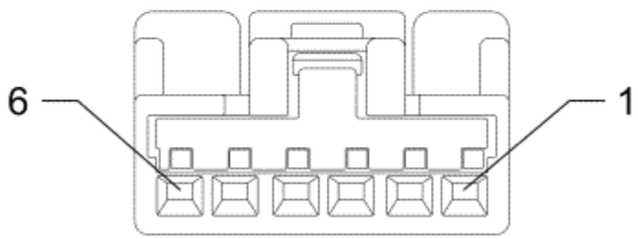

Connector Part Information

Harness Type: Steering Wheel
OEM Connector: AIT2PB-06-1AK
Service Connector: 19167753
Description: 6-Way F AIT II Series (BK)

Terminal Part Information

Terminated Lead: 13575867
Release Tool: J-38125-215A
Diagnostic Test Probe: J-35616-64B (L-BU)

S70R Steering Wheel Controls Switch - Right

Pin	Size	Colour	Circuit	Function	Option
1	0.35	WH/RD	1444	12 Volt Reference	--

2	0.35	D-GN	6819	Steering Wheel Resistor Ladder Signal #2	--
3	--	--	--	Not Used	--
4	0.35	YE	6817	LED Backlight Dimming Control	-
5	0.35	BK	1650	Ground	-
	0.35	BK	1650	Ground	—
6	--	--	--	Not Used	--

© Copyright Chevrolet. All rights reserved

S78 Direction Indicator/Multi- Function Switch

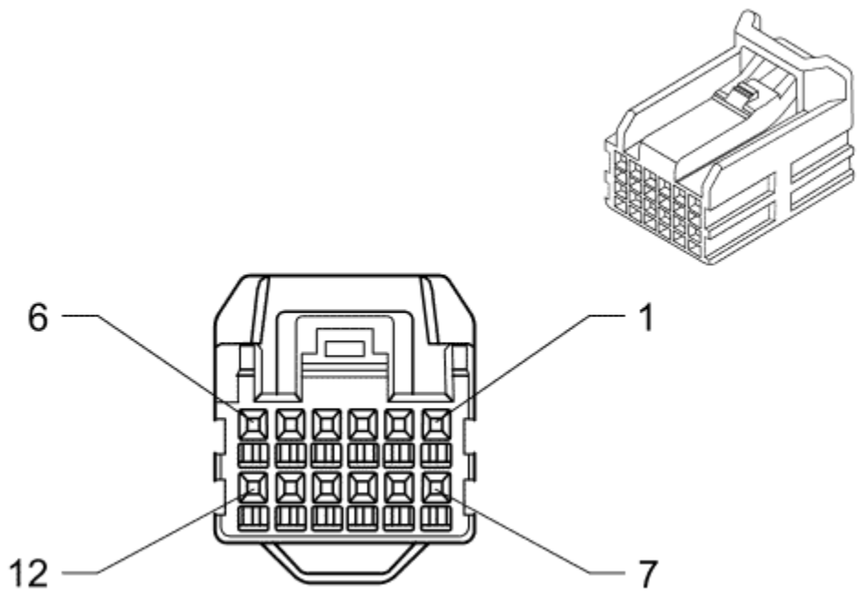

Connector Part Information

Harness Type: Instrument Panel
OEM Connector: SHC2PB-12-2AK
Service Connector: 13576635
Description: 12-Way F 0.64 Series (BK)

Terminal Part Information

Terminated Lead: 13575870
Release Tool: J-38125-12A
Diagnostic Test Probe: J-35616-64B (L-BU)

S78 Direction Indicator/Multi- Function Switch

Pin	Size	Colour	Circuit	Function	Option
1	--	--	--	Not Used	--

2	0.5	WH/VT	103	Headlamp Switch On Signal	--
3	--	--	--	Not Used	--
4	0.35	L-GN/VT	1415	Right Front Indicator Switch Signal	-
5	0.35	L-BU/WH	1414	Left Front Indicator Switch Signal	--
6	0.5	BK	1750	Ground	-
7	0.5	L-GN/GY	13	Headlamp Switch Park Lamp Signal	--
8	--	--	--	Not Used	--
9	0.5	L-GN/BN	306	Headlamp Switch Headlamps Off Signal Control	-
10	--	--	--	Not Used	--
11	0.35	WH	524	Headlamp Dimmer Switch Main Beam Signal	-
12	0.35	YE/BN	307	Headlamp Switch Flash To Pass Signal	-

© Copyright Chevrolet. All rights reserved

S79D Window Switch - Driver

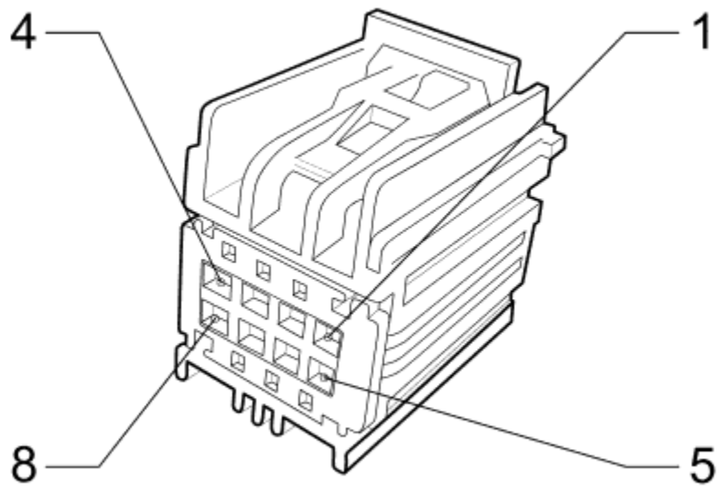

Connector Part Information

Harness Type: Driver Door Trim
OEM Connector: 7283-9029-40
Service Connector: 19115653
Description: 8-Way F YESC Kaizen Series (L-GY)

Terminal Part Information

Terminated Lead: 13575845
Release Tool: J-38125-215A
Diagnostic Test Probe: J-35616-64B (L-BU)

S79D Window Switch - Driver

Pin	Size	Colour	Circuit	Function	Option
1	0.5	BK	1550	Ground	--

2	0.35	L-GN	3381	Power Window Switch Driver Express Signal	--
3	0.35	GY	3380	Power Window Switch Driver Down Signal	-
4	0.35	RD/WH	4740	Battery Positive Voltage	--
5	0.5	L-GN/YE	6134	Linear Interconnect Network Bus 3	--
6	0.35	L-GN/WH	3379	Power Window Switch Driver Up Signal	--
7	0.35	BN/L-GN	3270	Driver Door Lock Motor Status Control	--
8	0.35	BN/L-GN	1124	Door Lock Key Switch Unlock Signal	-

© Copyright Chevrolet. All rights reserved

S79LR Window Switch - Left Rear

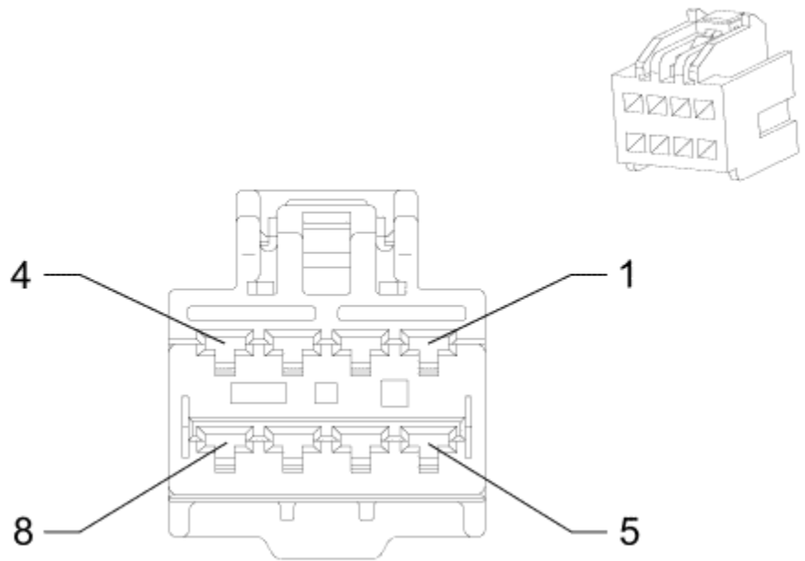

Connector Part Information

Harness Type: Left Rear Door
OEM Connector: 6098-4713
Service Connector: 88988652
Description: 8-Way F 2.8 Series (BK)

Terminal Part Information

Pins: 1-3
Terminated Lead: 13575577
Release Tool: J-38125-553
Diagnostic Test Probe: J-35616-35 (VT)

Pins: 5-8
Terminated Lead: 13575578
Release Tool: J-38125-553
Diagnostic Test Probe: J-35616-35 (VT)

S79LR Window Switch - Left Rear

Pin	Size	Colour	Circuit	Function	Option
1	0.5	L-GN/GY	6135	Linear Interconnect Network Bus 4	-
2	0.5	GY	747	Left Rear Door Ajar Switch Signal	--
3	0.5	BK	650	Ground	-
4	--	--	--	Not Used	--
5	2.5	BK	650	Ground	--
6	2.5	L-BU/VT	668	Power Window Motor Left Rear Up Control	-
7	2.5	YE/L-BU	669	Power Window Motor Left Rear Down Control	--
8	2.5	RD/YE	3740	Battery Positive Voltage	-

© Copyright Chevrolet. All rights reserved

S79P Window Switch - Passenger

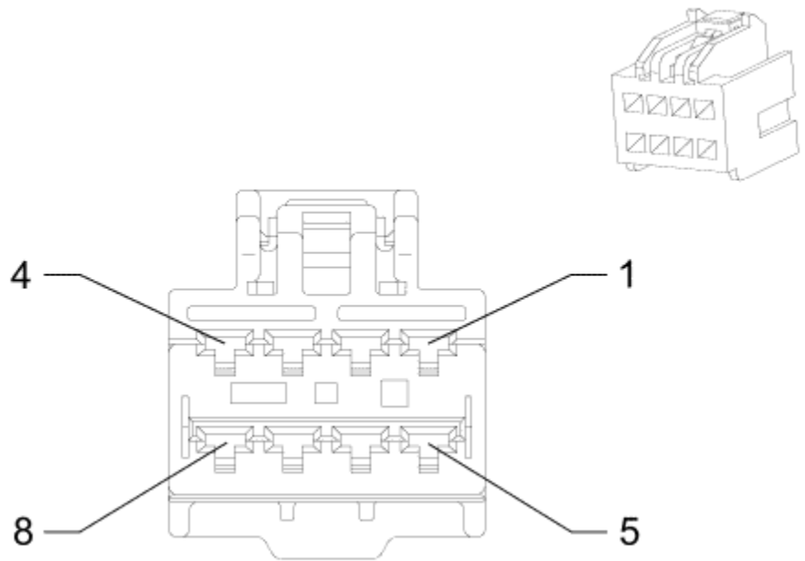

Connector Part Information

Harness Type: Passenger Door
OEM Connector: 6098-4713
Service Connector: 88988652
Description: 8-Way F 2.8 Series (BK)

Terminal Part Information

Pins: 1-4
Terminated Lead: 13575578
Release Tool: J-38125-553
Diagnostic Test Probe: J-35616-35 (VT)

Pins: 5, 6
Terminated Lead: 13575577
Release Tool: J-38125-553
Diagnostic Test Probe: J-35616-35 (VT)

S79P Window Switch - Passenger

Pin	Size	Colour	Circuit	Function	Option
1	2.5	BK	2050	Ground	-
2	2.5	L-GN/GY	3387	Power Window Motor Co-Driver Up Control	--
3	2.5	YE/L-BU	3388	Power Window Motor Co-Driver Down Control	-
4	2.5	RD/BN	3640	Battery Positive Voltage	--
5	0.5	L-GN/YE	6134	Linear Interconnect Network Bus 3	--
6	0.5	GY	746	Right Front Door Ajar Switch Signal	-
7-8	--	--	--	Not Used	--

© Copyright Chevrolet. All rights reserved

S79RR Window Switch - Right Rear

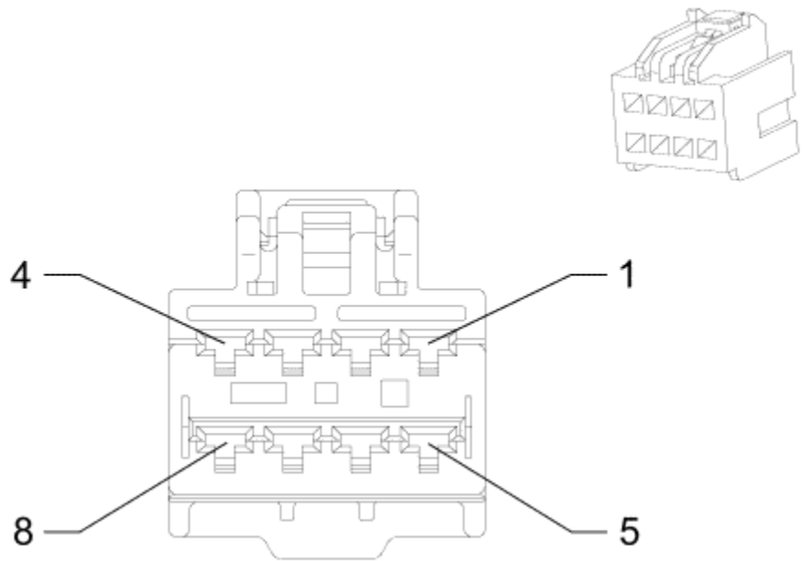

Connector Part Information

Harness Type: Right Rear Door
OEM Connector: 6098-4713
Service Connector: 88988652
Description: 8-Way F 2.8 Series (BK)

Terminal Part Information

Pins: 1, 2
Terminated Lead: 13575577
Release Tool: J-38125-553
Diagnostic Test Probe: J-35616-35 (VT)

Pins: 5-8
Terminated Lead: 13575578
Release Tool: J-38125-553
Diagnostic Test Probe: J-35616-35 (VT)

S79RR Window Switch - Right Rear

Pin	Size	Colour	Circuit	Function	Option
1	0.5	L-GN/GY	6135	Linear Interconnect Network Bus 4	-
2	0.5	GY	748	Right Rear Door Ajar Switch Signal	-
3-4	--	--	--	Not Used	--
5	2.5	BK	850	Ground	--
6	2.5	L-BU/GY	670	Power Window Motor Right Rear Up Control	-
7	2.5	L-GN/BK	671	Power Window Motor Right Rear Down Control	-
8	2.5	RD/YE	3740	Battery Positive Voltage	-

© Copyright Chevrolet. All rights reserved

S82 Windscreen Wiper/Washer Switch

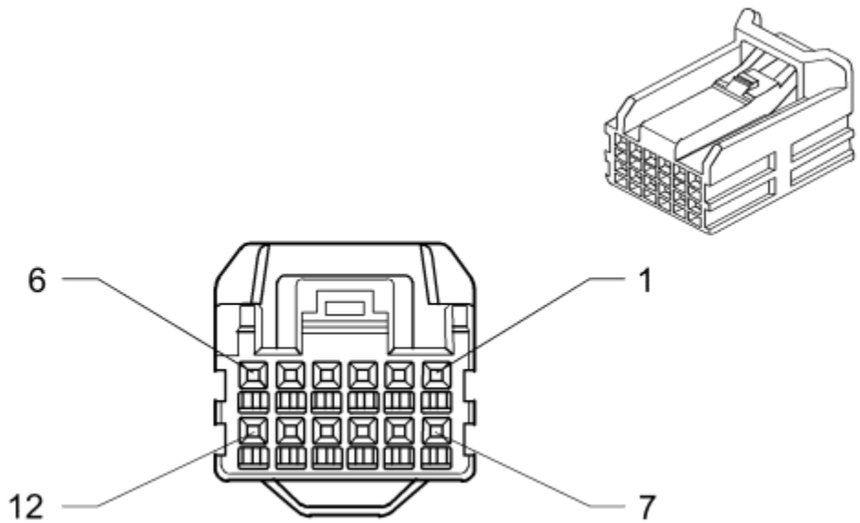

Connector Part Information

Harness Type: Instrument Panel
OEM Connector: HCMDPB-08-K
Service Connector: 13576541
Description: 8-Way F 1.2 HCM Series (BK)

Terminal Part Information

Terminated Lead: Service by Connector Assembly - 13576541
Release Tool: J-38125-12A
Diagnostic Test Probe: J-35616-64B (L-BU)

S82 Windscreen Wiper/Washer Switch

Pin	Size	Colour	Circuit	Function	Option
1	0.35	GY	1715	Windshield Wiper Switch High Signal	-
2	0.35	BK/GY	6009	Low Reference	--
3	0.35	YE/L-BU	1714	Windscreen Wiper Switch Low Signal	--

4	--	--	--	Not Used	—
5	0.5	WH/BK	94	Windscreen Washer Switch Signal	-
6-8	--	--	--	Not Used	-

© Copyright Chevrolet. All rights reserved

S83 Vehicle On/Off Switch

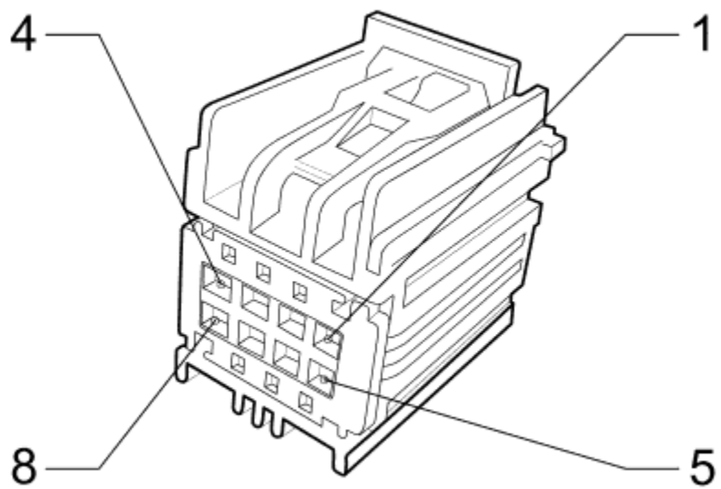

Connector Part Information

Harness Type: Instrument Panel
OEM Connector: 7283-9029-40
Service Connector: 19115653
Description: 8-Way F YESC Kaizen Series (L-GY)

Terminal Part Information

Terminated Lead: 13575845
Release Tool: J-38125-215A
Diagnostic Test Probe: J-35616-64B (L-BU)

S83 Vehicle On/Off Switch

Pin	Size	Colour	Circuit	Function	Option
1-2	--	--	--	Not Used	--

3	0.35	L-GN/BK	3558	Passive Start Switch Signal 2	--
4	0.5	BK	1650	Ground	--
5	0.35	L-BU/BK	5719	Ignition Mode Switch Start LED Signal	--
6	0.35	L-BU/L-GN	5723	Ignition Mode Switch Mode Voltage	--
7	0.35	BK/GY	3559	Low Reference	--
8	0.35	YE/GY	230	Instrument Panel Lamp Dimming Control	-

© Copyright Chevrolet. All rights reserved

S91 Park Brake Control Switch

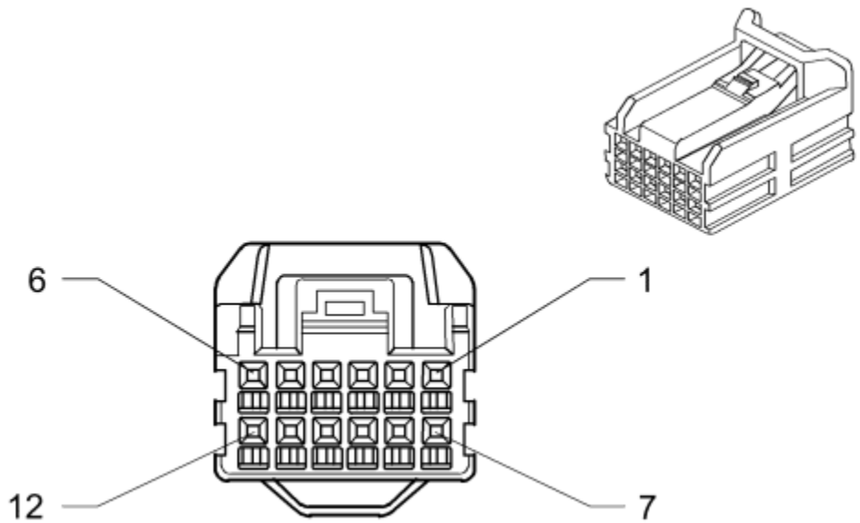

Connector Part Information

Harness Type: Instrument Panel
OEM Connector: HCMDPB-08-K
Service Connector: 13576541
Description: 8-Way F 1.2 HCM Series (BK)

Terminal Part Information

Terminated Lead: Service by Connector Assembly - 13576541
Release Tool: J-38125-12A
Diagnostic Test Probe: J-35616-64B (L-BU)

S91 Park Brake Control Switch

Pin	Size	Colour	Circuit	Function	Option
1	0.35	YE	1492	Park Brake Switch Supply Voltage	--
2	0.35	L-BU/VT	1134	Park Brake Switch Signal	--
3	0.35	GY/BK	7683	Park Brake Release Switch Voltage Reference	-

4	0.35	BN	6107	Park Brake Apply Switch Signal	-
5	0.35	L-BU/BK	6108	Park Brake Release Switch Signal	—
6	0.5	YE	6817	LED Backlight Dimming Control	-
7	0.35	BN/WH	7684	Park Brake Apply Switch Voltage Reference	--
8	0.5	BK	1650	Ground	-

© Copyright Chevrolet. All rights reserved

S109 Sport Mode Switch

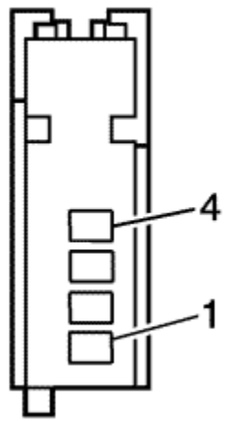

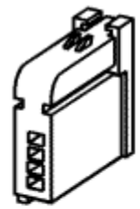

Connector Part Information

Harness Type: Instrument Panel
OEM Connector: AIT2PB-04A-1AK
Service Connector: 19179273
Description: 4-Way F AIT II Series (BK)

Terminal Part Information

Terminated Lead: Service by Connector Assembly - 19179273
Release Tool: J-38125-215A
Diagnostic Test Probe: J-35616-64B (L-BU)

S109 Sport Mode Switch

Pin	Size	Colour	Circuit	Function	Option
1	0.35	GY	5054	Sport Mode Switch Signal	--
2	0.35	BK/VT	3109	Low Reference	--
3	0.35	YE	7556	Lighting Control Switch Reference	--
4	0.5	BK	1650	Ground	-

© Copyright Chevrolet. All rights reserved

S113 Charge Port Door Open Request Switch

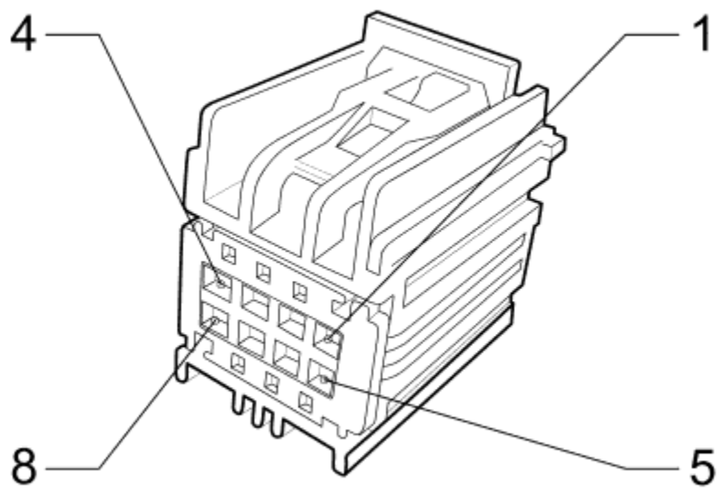

Connector Part Information

Harness Type: Driver Door Trim
OEM Connector: 7283-9029-40
Service Connector: 19115653
Description: 8-Way F YESC Kaizen Series (L-GY)

Terminal Part Information

Terminated Lead: 13575845
Release Tool: J-38125-215A
Diagnostic Test Probe: J-35616-64B (L-BU)

S113 Charge Port Door Open Request Switch

Pin	Size	Colour	Circuit	Function	Option
1	0.35	RD/WH	4740	Battery Positive Voltage	-

2	0.35	BN/YE	3698	Charge Port Door Switch Wake-up Signal	--
3	0.35	VT/BN	3699	Charge Port Door Switch Signal	-
4	0.35	BK	1550	Ground	--
5	0.35	YE	6817	LED Backlight Dimming Control	-
6	0.35	BK/GY	718	Low Reference	-
7-8	--	--	--	Not Used	--

© Copyright Chevrolet. All rights reserved

S117 Refuel Request Switch

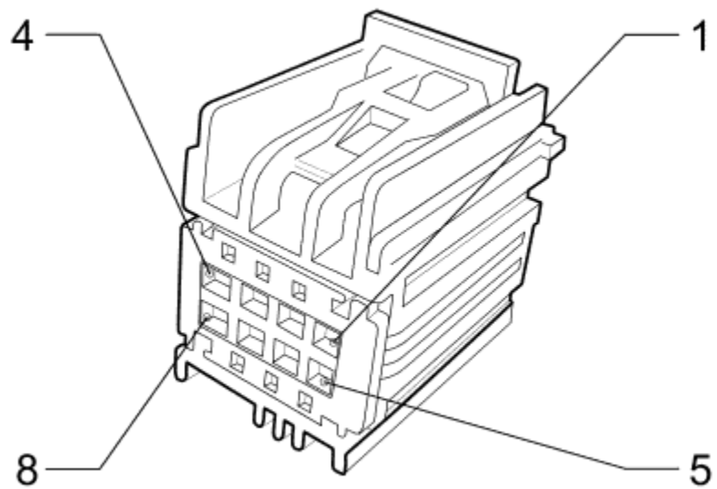

Connector Part Information

Harness Type: Driver Door Trim
OEM Connector: 7283-9028-30
Service Connector: 13576542
Description: 8-Way F YESC Kaizen Series (BK)

Terminal Part Information

Terminated Lead: 13575845
Release Tool: J-38125-215A
Diagnostic Test Probe: J-35616-64B (L-BU)

S117 Refuel Request Switch

Pin	Size	Colour	Circuit	Function	Option
1	0.35	RD/WH	4740	Battery Positive Voltage	-

2	0.5	BN/WH	3827	Refuel Request Switch Signal	--
3	0.5	GY/WH	1447	Fuel Door Release Switch Signal	-
4	0.35	BK	1550	Ground	--
5	0.35	YE	6817	LED Backlight Dimming Control	-
6	0.5	BK/L-BU	3828	Low Reference	-
7-8	--	--	--	Not Used	--

© Copyright Chevrolet. All rights reserved

T3 Audio Amplifier X1

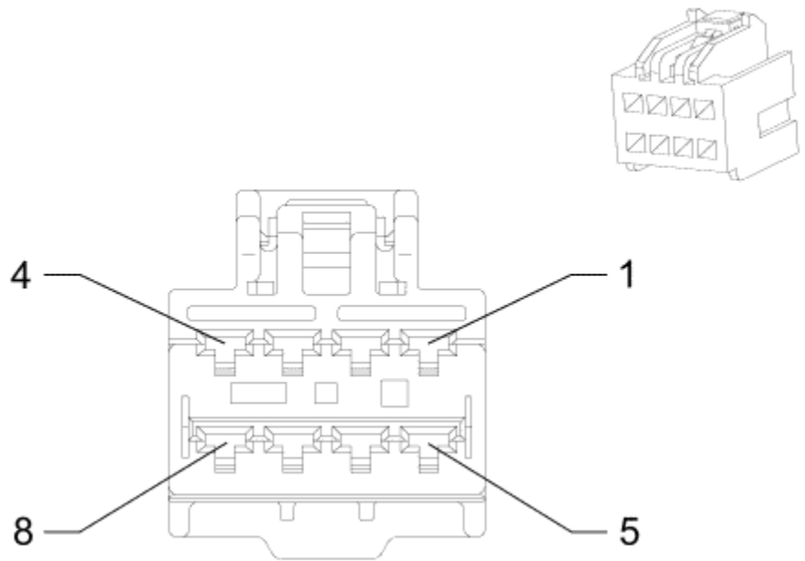

Connector Part Information

Harness Type: Body
OEM Connector: 6098-4713
Service Connector: 88988652
Description: 8-Way F 2.8 Series (BK)

Terminal Part Information

Pins: 1, 2, 5, 6
Terminated Lead: Service by Connector Assembly - 88988652
Release Tool: J-38125-553
Diagnostic Test Probe: J-35616-35 (VT)

Pins: 4, 8
Terminated Lead: Service by Connector Assembly - 88988652
Release Tool: J-38125-553
Diagnostic Test Probe: J-35616-35 (VT)

T3 Audio Amplifier X1

Pin	Size	Colour	Circuit	Function	Option
1	0.75	YE/L-BU	1856	Left Front Tweeter Speaker (+)	-
2	1	L-GN/BK	1794	Left/Rear Subwoofer Speaker (-)	--
3	--	--	--	Not Used	--
4	2.5	RD/BN	1140	Battery Positive Voltage	--
5	0.75	YE/GY	1956	Left Front Tweeter Speaker (-)	—
6	1	L-BU/GY	346	Left/Rear Subwoofer Speaker (+)	-
7	--	--	--	Not Used	--
8	2.5	BK	850	Ground	-

© Copyright Chevrolet. All rights reserved

T3 Audio Amplifier X2

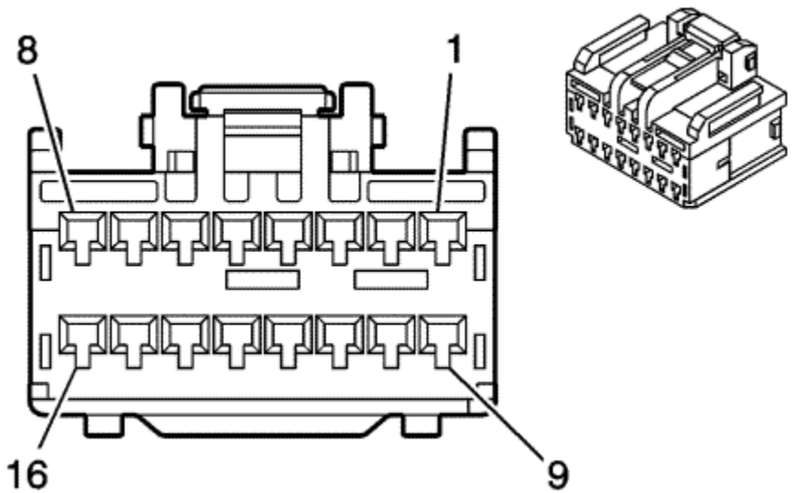

Connector Part Information

Harness Type: Body
OEM Connector: 6098-4611
Service Connector: 15134091
Description: 16-Way F 1.5 Series (BK)

Terminal Part Information

Pins: 1-9, 16
Terminated Lead: 13575580
Release Tool: J-38125-553
Diagnostic Test Probe: J-35616-2A (GY)

Pins: 12, 14
Terminated Lead: 13575579
Release Tool: J-38125-553
Diagnostic Test Probe: J-35616-2A (GY)

T3 Audio Amplifier X2

Pin	Size	Colour	Circuit	Function	Option

1	1	L-BU	201	Left Front Speaker (+) (1)	-
2	1	YE	200	Right Front Speaker (+) (1)	-
3	1	BN/YE	117	Right Front Speaker Signal (-) (1)	-
4	0.75	BN/L-GN	116	Left Rear Speaker Signal (-)	-
5	0.75	L-GN	199	Left Rear Speaker (+)	--
6	0.75	WH/BN	115	Right Rear Speaker Signal (-)	--
7	0.75	WH	46	Right Rear Speaker (+)	-
8	0.75	BN/L-GN	1852	Right Front Tweeter Speaker (+)	--
9	1	BN/L-BU	118	Left Front Speaker Signal (-) (1)	-
10-11	--	--	--	Not Used	--
12	0.5	VT/L-BU	6978	Amplifier Control	-
13	--	--	--	Not Used	--
14	0.5	L-GN/YE	7066	Entertainment Remote Enable Signal	-
15	--	--	--	Not Used	--
16	0.75	VT/BN	1952	Right Front Tweeter Speaker (-)	-

© Copyright Chevrolet. All rights reserved

T3 Audio Amplifier X3

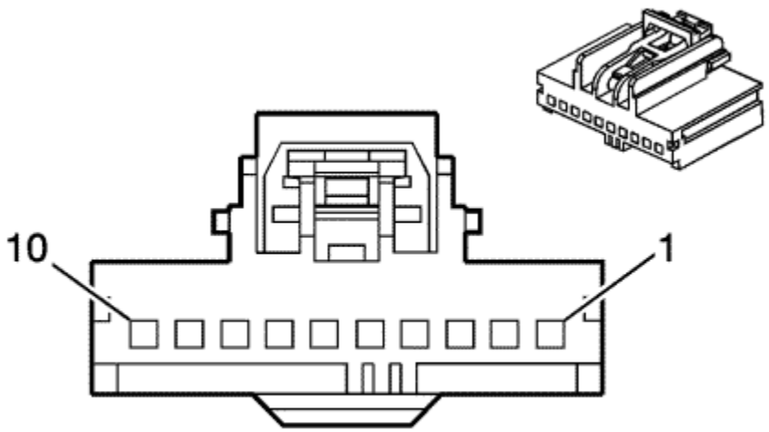

Connector Part Information

Harness Type: Body
OEM Connector: 7283-9076-30
Service Connector: 15136073
Description: 16-Way F Kaizen 64 Series (BK)

Terminal Part Information

Terminated Lead: 13575845
Release Tool: J-38125-215A
Diagnostic Test Probe: J-35616-64B (L-BU)

T3 Audio Amplifier X3

Pin	Size	Colour	Circuit	Function	Option
1-2	--	--	--	Not Used	--
3	0.35	BN/WH	546	Right Rear Low Level Audio Signal	-
4	0.35	BN/VT	1999	Left Rear Low Level Audio (-)	-
5	0.35	YE	512	Right Front Low Level Audio Signal	--

6	0.35	BN/L-BU	1947	Left Front Low Level Audio (-)	-
7-10	--	--	--	Not Used	--
11	0.35	L-BU/BN	1946	Right Rear Low Level Audio (-)	-
12	0.35	L-GN/BK	599	Left Rear Low Level Audio Signal	--
13	0.35	L-BU/BK	1546	Front Low Level Audio (-)	-
14	0.35	L-BU	511	Left Front Low Level Audio Signal	-
15-16	--	--	--	Not Used	--

© Copyright Chevrolet. All rights reserved

T6 Power Inverter Module Assembly X1

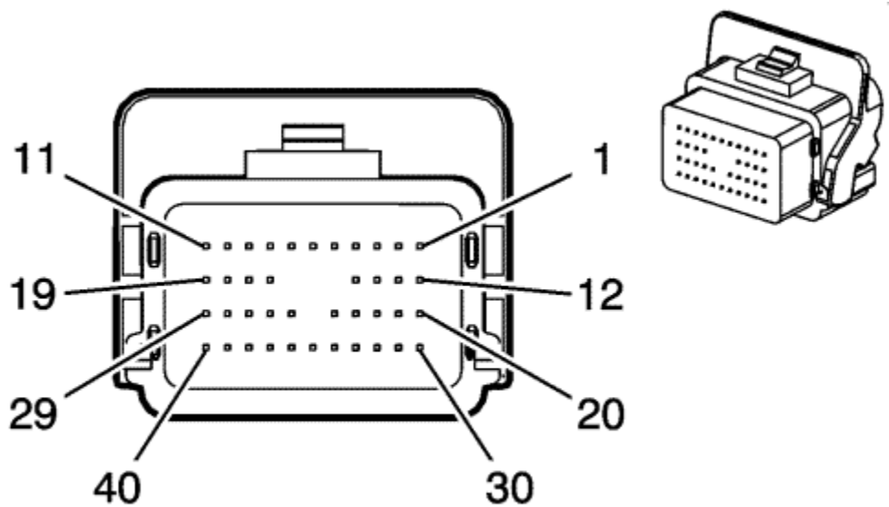

Connector Part Information

Harness Type: Engine
OEM Connector: HPSPB-40C31-BH
Service Connector: 13577546
Description: 40-Way F 0.64 Series, Sealed (GY)

Terminal Part Information

Pins: 1-3, 12-14, 33-36
Terminated Lead: 13505805
Release Tool: J-38125-215A
Diagnostic Test Probe: J-35616-64B (L-BU)

Pins: 4-11, 15-22, 24, 25, 30-32
Terminated Lead: 13575865
Release Tool: J-38125-215A
Diagnostic Test Probe: J-35616-64B (L-BU)

T6 Power Inverter Module Assembly X1

Pin	Size	Colour	Circuit	Function	Option
1	0.75	GY	3487	Traction Power Inverter Module Resolver #2 S3 Signal	--
2	0.75	L-GN	3491	Traction Power Inverter Module Resolver #2 S2 Signal	--
3	0.75	L-BU	3486	Traction Power Inverter Module Resolver #2 Excitation Signal Positive	-
4	0.5	WH	6106	High Speed GMLAN Serial Data (-) (2)	-
5	0.5	WH	6106	High Speed GMLAN Serial Data (-) (2)	—
6	0.5	WH	6106	High Speed GMLAN Serial Data (-) (2)	-
7	0.5	L-BU/YE	6105	High Speed GMLAN Serial Data (+) (2)	-
8	0.5	WH	7494	High Speed GMLAN Serial Data (-)(3)	--
9	0.5	L-BU/BK	7493	High Speed GMLAN Serial Data (+)(3)	-
10	0.5	WH	2501	High Speed GMLAN Serial Data (-) (1)	-
11	0.5	L-BU	2500	High Speed GMLAN Serial Data (+) (1)	-
12	0.75	L-BU/YE	3488	Traction Power Inverter Module Resolver #2 S1 Signal	--
13	0.75	BN/YE	3492	Traction Power Inverter Module Resolver #2 S4 Signal	--
14	0.75	WH/L-GN	3485	Transmission Traction Power Inverter Module Resolver #2 Excitation Signal Negitive	--
15	0.5	L-BU/YE	6105	High Speed GMLAN Serial Data (+) (2)	-
16	0.5	WH	7494	High Speed GMLAN Serial Data (-)(3)	--
17	0.5	L-BU/BK	7493	High Speed GMLAN Serial Data (+)(3)	--
18	0.5	WH	2501	High Speed GMLAN Serial Data (-) (1)	-
19	0.5	L-BU	2500	High Speed GMLAN Serial Data (+) (1)	-
20	0.5	BN	7652	Traction Power Inverter Module Resolver #1 S3 Signal	--
21	0.5	VT/L-GN	7647	Transmission Traction Power Inverter Module Resolver #1 S2 Signal	-
22	0.5	L-BU	7645	Traction Power Inverter Module Resolver #1 Excitation Signal Positive	-
23	--	--	--	Not Used	--
24	0.5	RD/VT	1940	Battery Positive Voltage	—
25	0.5	L-BU/YE	6105	High Speed GMLAN Serial Data (+) (2)	-
26-29	--	--	--	Not Used	--
30	0.5	YE	7649	Traction Power Inverter Module Resolver #1 S1 Signal	--
31	0.5	GY	7646	Transmission Traction Power Inverter Module Resolver #1 S4 Signal	--
32	0.5	WH/L-GN	7648	Traction Power Inverter Module Traction Power Inverter Module Resolver #1 Excitation Signal Negative	-
33	0.75	BN/WH	3489	Traction Power Inverter Module Motor #2 Temp Signal	--
34	0.75	BN	3490	Traction Power Inverter Module Motor #2 Temp Sensor Return	-
35	0.75	WH/L-BU	7653	Traction Power Inverter Motor #1 Temperature Sensor Signal	--
36	0.75	L-GN	7654	Traction Power Inverter Motor #1 Temperature Sensor Return	-

37-40	--	--	--	Not Used	--

© Copyright Chevrolet. All rights reserved

T6 Power Inverter Module Assembly X2

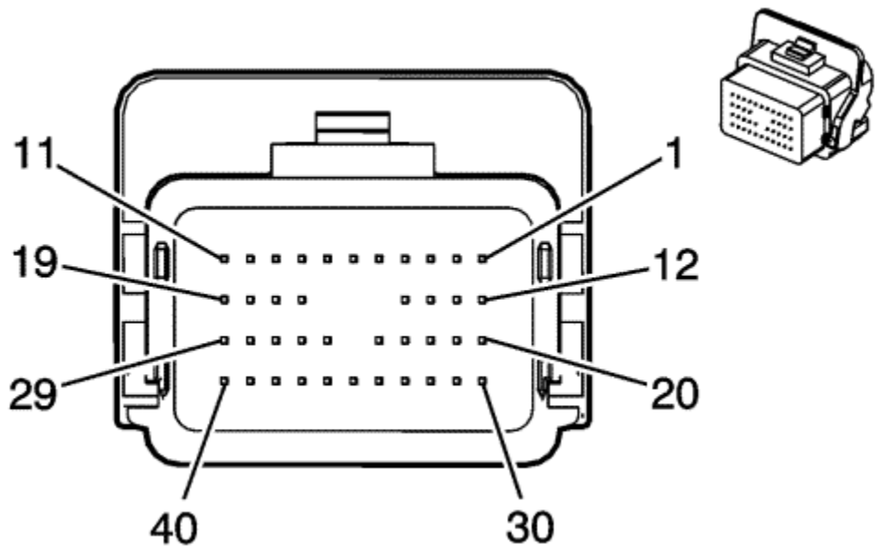

Connector Part Information

Harness Type: Engine
OEM Connector: HPSPB-40C12-AK
Service Connector: 13577547
Description: 40-Way F 0.64 Series, Sealed (BK)

Terminal Part Information

Pins: 1, 5, 11, 19, 35
Terminated Lead: 13575867
Release Tool: J-38125-215A
Diagnostic Test Probe: J-35616-64B (L-BU)

Pins: 8-10, 15-18
Terminated Lead: Pending
Release Tool: J-38125-215A
Diagnostic Test Probe: J-35616-64B (L-BU)

T6 Power Inverter Module Assembly X2

Pin	Size	Colour	Circuit	Function	Option
1	0.5	GY/L-BU	3336	High-Voltage Battery Pack Traction Power Inverter Module Contactor Status	-
2-4	--	--	--	Not Used	--
5	0.5	L-GN	6271	Crankshaft 60X Sensor Signal	-
6-7	--	--	--	Not Used	--
8	0.75	VT	3493	Transmission IMS Mode Switch S bit Signal	--
9	0.75	BN	3496	Transmission IMS Mode Switch D1 bit Signal	-
10	0.75	YE/BK	3494	Transmission IMS Mode Switch R1 bit Signal	--
11	0.5	L-BU/WH	3977	Accessory Wake-up Serial Data 2	-
12-14	--	--	--	Not Used	--
15	0.75	YE/RD	1673	12 Volt Reference	-
16	0.75	BK/WH	551	Signal Ground	-
17	0.75	L-GN/BN	3497	Transmission IMS Mode Switch D2 bit Signal	-
18	0.75	GY	3495	Transmission IMS Mode Switch R2 bit Signal	--
19	0.5	VT/BK	339	Run/Crank Ignition 1 Voltage	-
20-34	--	--	--	Not Used	--
35	0.5	RD/YE	240	Battery Positive Voltage	-
36-40	--	--	--	Not Used	--

© Copyright Chevrolet. All rights reserved

T6 Power Inverter Module X3

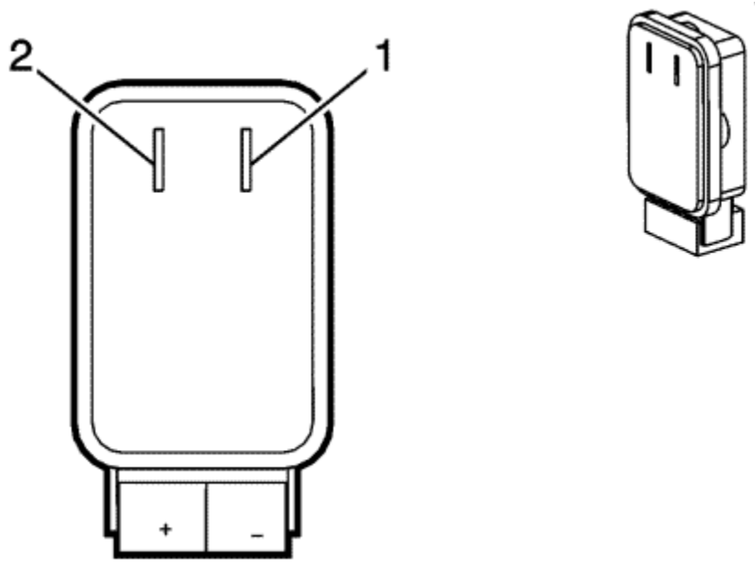

Connector Part Information

Harness Type: High Voltage
OEM Connector: 13505765
Service Connector: Service by Harness - See Part Catalog
Description: 2-Way (Metal)

Terminal Part Information

Terminated Lead: Service by Harness - See Part Catalog
Release Tool: Service by Harness - See Part Catalog
Diagnostic Test Probe: Service by Harness - See Part Catalog

T6 Power Inverter Module X3

Pin	Size	Colour	Circuit	Function	Option
1	35	OG	5083	High-Voltage Battery (-)	-
2	35	OG	5084	High-Voltage Battery (+)	-

© Copyright Chevrolet. All rights reserved

T6 Power Inverter Module X4

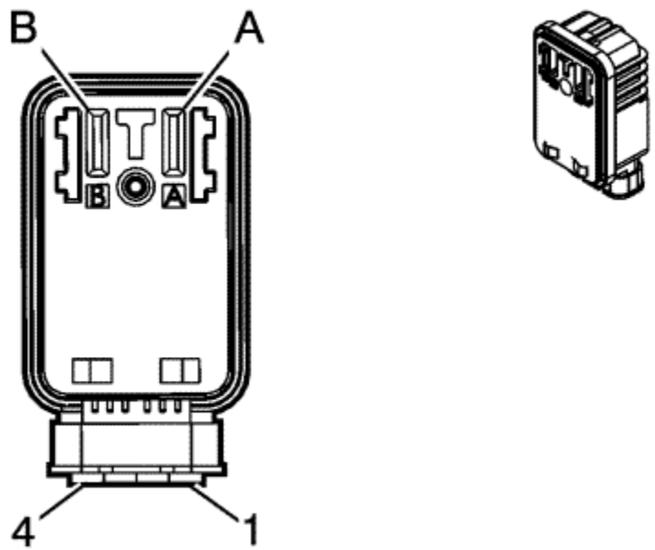

Connector Part Information

Harness Type: High Voltage
OEM Connector: DC2-HVGTPB-02-BD
Service Connector: Service by Harness - See Part Catalog
Description: 4-Way F (Metal)

Terminal Part Information

Terminated Lead: Service by Harness - See Part Catalog
Release Tool: Service by Harness - See Part Catalog
Diagnostic Test Probe: Service by Harness - See Part Catalog

T6 Power Inverter Module X4

Pin	Size	Colour	Circuit	Function	Option
1	--	L-BU	5084	High-Voltage Battery (+)	-
2	--	L-BU	5083	High-Voltage Battery (-)	--
3	--	L-BU	5084	High-Voltage Battery (+)	--

4	--	L-BU	5083	High-Voltage Battery (-)	-

© Copyright Chevrolet. All rights reserved

T6 Power Inverter Module X5

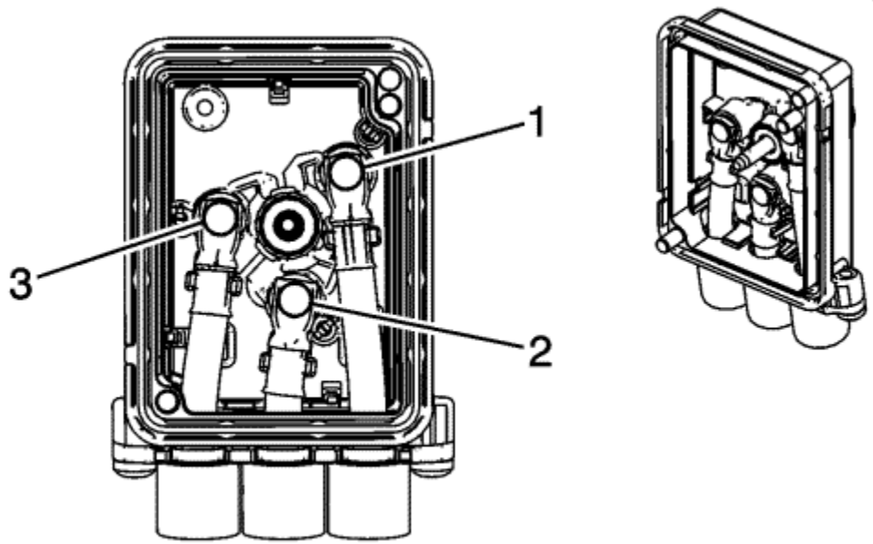

Connector Part Information

Harness Type: High Voltage
OEM Connector: Not Available
Service Connector: Service by Harness - See Part Catalog
Description: 3-Way (Metal)

Terminal Part Information

Terminated Lead: Service by Harness - See Part Catalog
Release Tool: Service by Harness - See Part Catalog
Diagnostic Test Probe: Not Available

T6 Power Inverter Module X5

Pin	Size	Colour	Circuit	Function	Option
1	--	OG	3770	Drive Motor 1 300 V W Phase	-
2	--	OG	3771	Drive Motor 1 300 V V Phase	--
3	--	OG	3772	Drive Motor 1 300 V U Phase	-

© Copyright Chevrolet. All rights reserved

T6 Power Inverter Module X6

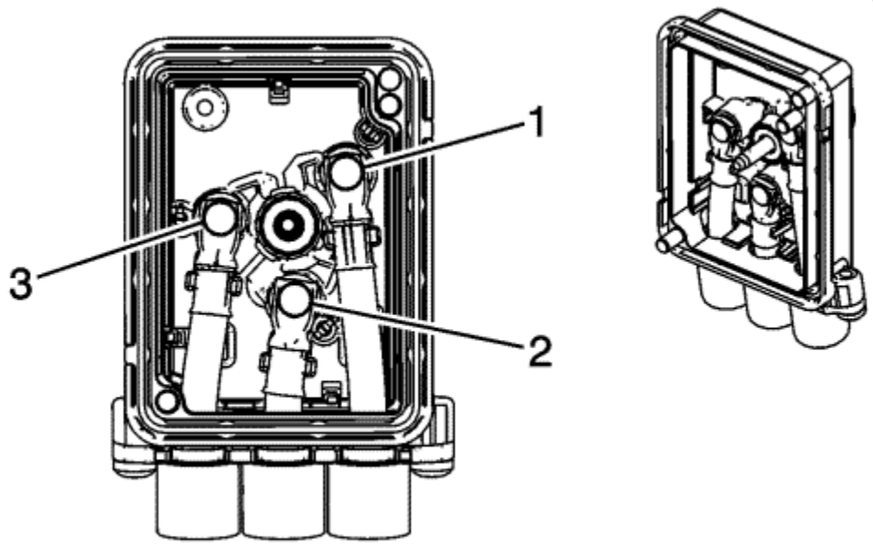

Connector Part Information

Harness Type: High Voltage
OEM Connector: Not Available
Service Connector: Service by Harness - See Part Catalog
Description: 3-Way (Metal)

Terminal Part Information

Terminated Lead: Service by Harness - See Part Catalog
Release Tool: Service by Harness - See Part Catalog
Diagnostic Test Probe: Not Available

T6 Power Inverter Module X6

Pin	Size	Colour	Circuit	Function	Option
1	--	OG	3770	Drive Motor 2 300 V W Phase	-
2	--	OG	3771	Drive Motor 2 300 V V Phase	--
3	--	OG	3772	Drive Motor 2 300 V U Phase	-

© Copyright Chevrolet. All rights reserved

T6 Power Inverter Module X7

Connector Part Information

Harness Type: Engine
OEM Connector: 10162100
Service Connector: Service by Component - See Part Catalogue
Description: Ring Terminal

Terminal Part Information

Terminated Lead: Service by Component - See Part Catalogue
Release Tool: Not Available
Diagnostic Test Probe: Not Available

T6 Power Inverter Module X7

Pin	Size	Colour	Circuit	Function	Option
A	1	BK/WH	651	Ground Shield	-

© Copyright Chevrolet. All rights reserved

T6 Power Inverter Module X8

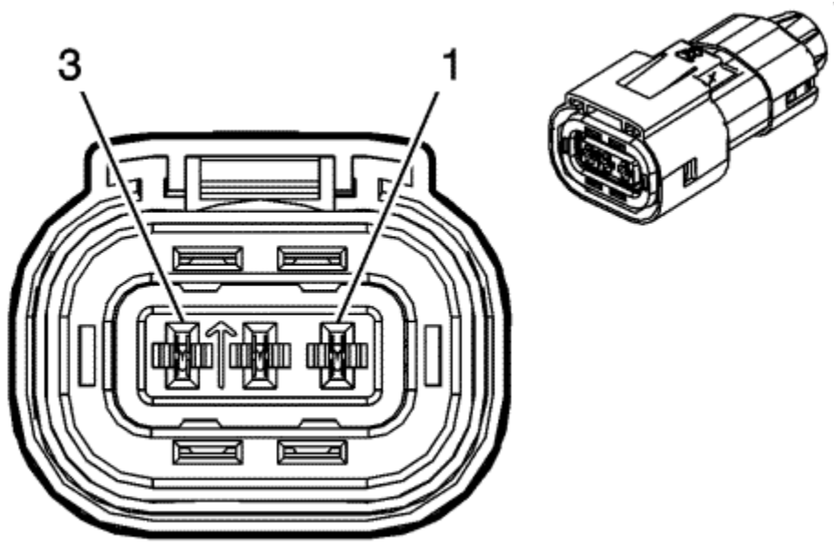

Connector Part Information

Harness Type: Auxiliary Transmission Fluid Pump
OEM Connector: Not Available
Service Connector: Service by Component - See Part Catalogue
Description: 3-Way F (OG)

Terminal Part Information

Terminated Lead: Service by Component - See Part Catalogue
Release Tool: Service by Component - See Part Catalogue
Diagnostic Test Probe: Not Available

T6 Power Inverter Module X8

Pin	Size	Colour	Circuit	Function	Option
1	--	OG	3770	Transmission Fluid Pump 300 V W Phase	-
2	--	OG	3771	Transmission Fluid Pump 300 V V Phase	--
3	--	OG	3772	Transmission Fluid Pump 300 V U Phase	-

© Copyright Chevrolet. All rights reserved

T10 Keyless Entry Aerial

Connector Part Information

Harness Type: Instrument Panel
OEM Connector: 968943-2
Service Connector: 24414929
Description: 4-Way F 64 MQS Series (GY)

Terminal Part Information

Terminated Lead: Service by Connector Assembly - 24414929
Release Tool: J-38125-12A
Diagnostic Test Probe: J-35616-64B (L-BU)

T10 Keyless Entry Aerial

Pin	Size	Colour	Circuit	Function	Option
1	0.5	BN/WH	3552	Passive Start Interior Aerial 1 Signal Hi	-
2	0.5	WH	3553	Passive Start Interior Aerial 1 Signal Lo	-
3-4	--	--	--	Not Used	--

© Copyright Chevrolet. All rights reserved

Center Console Components

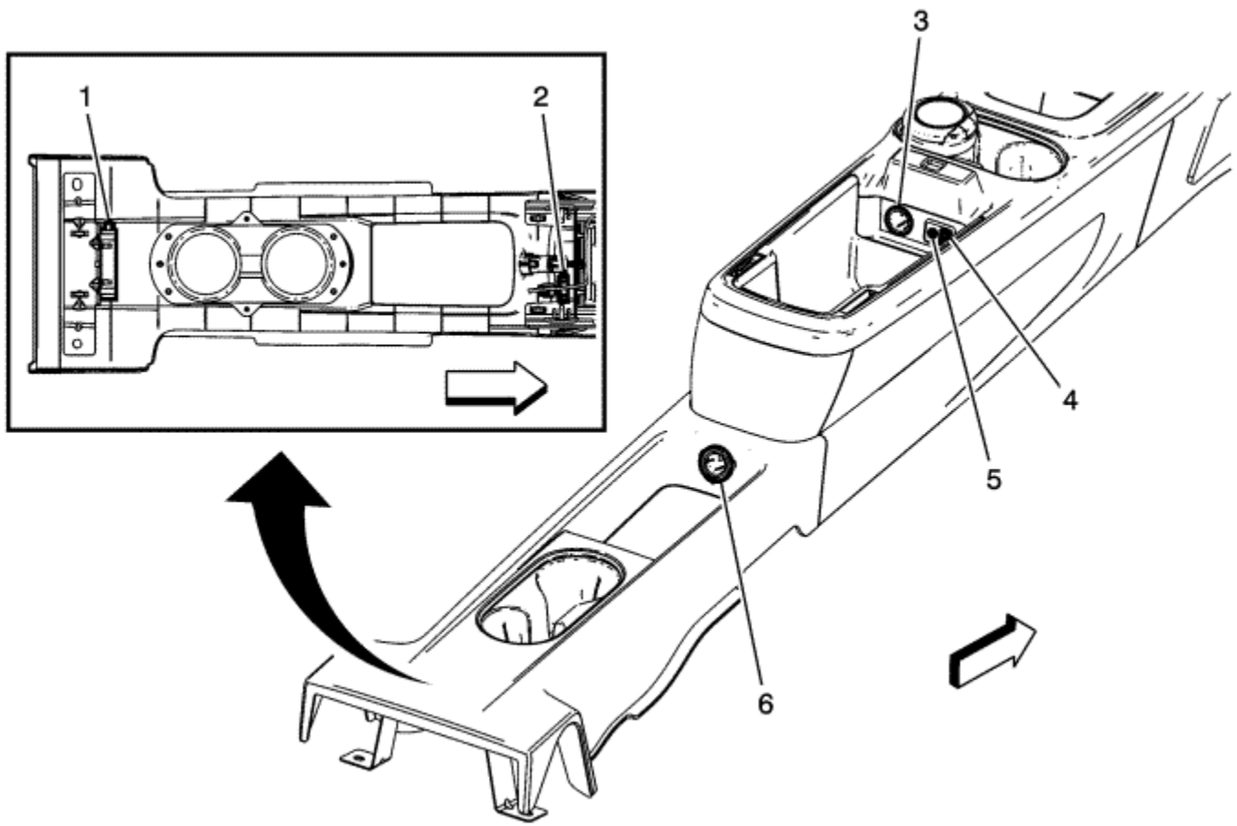

(1) T10E Keyless Entry Antenna - Rear Compartment
(2) T10K Keyless Entry Aerial - Centre Console Rear
(3) X80H Accessory Power Receptacle - Centre Console
(4) X92 USB Receptacle
(5) X83 Auxiliary Audio Input
(6) X80L Accessory Power Receptacle - Rear Console

© Copyright Chevrolet. All rights reserved

T10E Keyless Entry Antenna - Rear Compartment

Connector Part Information

Harness Type: Body
OEM Connector: 968943-2
Service Connector: 24414929
Description: 4-Way F 64 MQS Series (GY)

Terminal Part Information

Terminated Lead: Service by Connector Assembly - 24414929
Release Tool: J-38125-12A
Diagnostic Test Probe: J-35616-64B (L-BU)

T10E Keyless Entry Antenna - Rear Compartment

Pin	Size	Colour	Circuit	Function	Option
1	0.5	OG	3556	Passive Start Interior Aerial 3 Signal Hi	-
2	0.5	OG/L-BU	3557	Passive Start Interior Aerial 3 Signal Lo	-
3-4	--	--	--	Not Used	--

© Copyright Chevrolet. All rights reserved

T10K Keyless Entry Aerial - Centre Console Rear

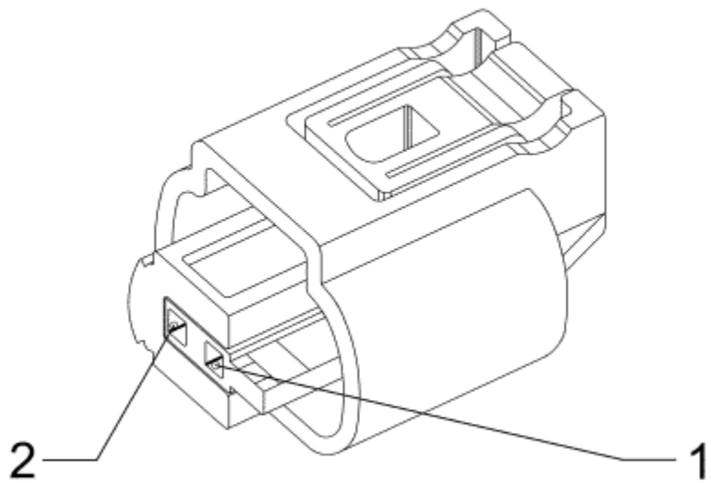

Connector Part Information

Harness Type: Console
OEM Connector: 24461693
Service Connector: 13576533
Description: 2-Way F 0.64 MQS Series, Sealed (BK)

Terminal Part Information

Terminated Lead: Service by Harness - See Part Catalog
Release Tool: Service by Harness - See Part Catalog
Diagnostic Test Probe: Service by Harness - See Part Catalog

T10K Keyless Entry Aerial - Centre Console Rear

Pin	Size	Colour	Circuit	Function	Option
1	0.5	OG	3554	Passive Start Interior Aerial 2 Signal Hi	-

2	0.5	OG/L-BU	3555	Passive Start Interior Aerial 2 Signal Lo	-

© Copyright Chevrolet. All rights reserved

T18 Battery Charger X1

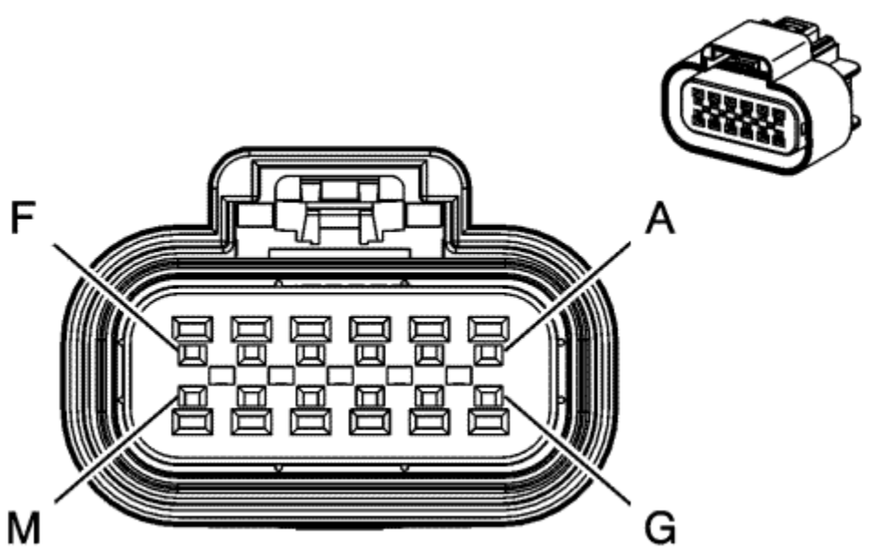

Connector Part Information

Harness Type: Forward Lamp
OEM Connector: 13530777
Service Connector: 13504588
Description: 12-Way F GT 150 Series, Sealed (BK)

Terminal Part Information

Terminated Lead: 13575413
Release Tool: J-38125-553
Diagnostic Test Probe: J-35616-2A (GY)

T18 Battery Charger X1

Pin	Size	Colour	Circuit	Function	Option
A	0.5	VT/GY	139	Run/Crank Ignition 1 Voltage	-
B	0.5	L-BU/L-GN	6433	CAN Bus High Serial Data	-
C	0.5	WH	6432	CAN Bus Low Serial Data	-

D-E	--	--	--	Not Used	--
F	0.5	L-BU/WH	3977	Accessory Wake-up Serial Data 2	-
G	0.5	L-BU/L-GN	3787	High-Voltage Energy Management Communication Enable	-
H-J	--	--	--	Not Used	--
K	0.5	L-BU	2500	High Speed GMLAN Serial Data (+) (1)	-
L	0.5	WH	2501	High Speed GMLAN Serial Data (-) (1)	-
M	--	--	--	Not Used	--

© Copyright Chevrolet. All rights reserved

T18 Battery Charger X2

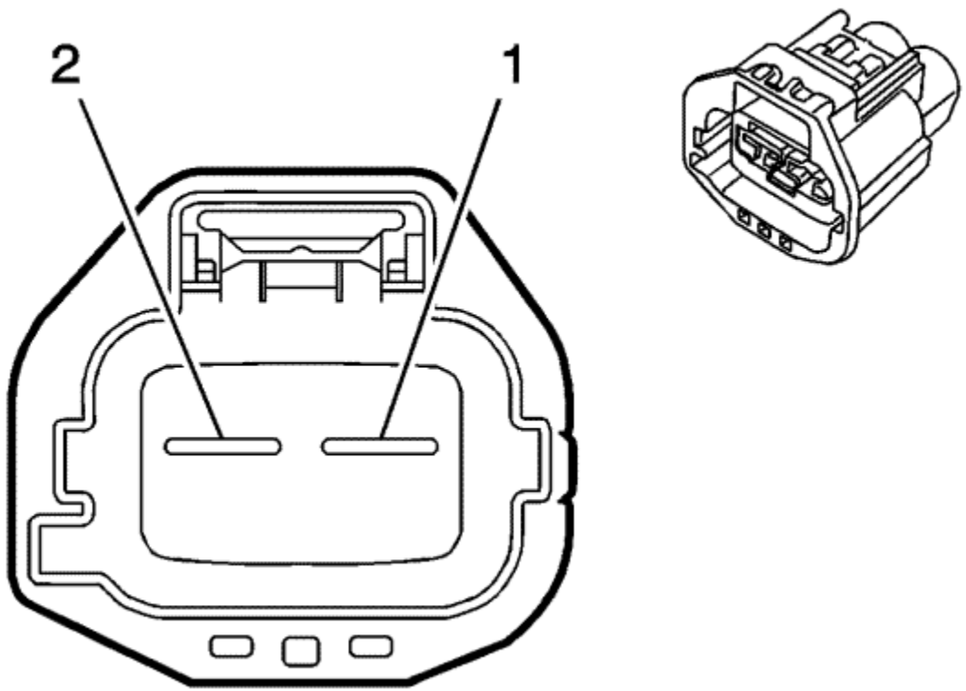

Connector Part Information

Harness Type: Forward Lamp
OEM Connector: 7283-5596-10
Service Connector: 88953307
Description: 2-Way F YESC/USCAR Class III (D-GY)

Terminal Part Information

Terminated Lead: Service by Connector Assembly - 88953307
Release Tool: J-38125-11A
Diagnostic Test Probe: J-35616-42 (RD)

T18 Battery Charger X2

Pin	Size	Colour	Circuit	Function	Option
1	3	BK	1350	Ground	-
2	3	RD/WH	640	Battery Positive Voltage	-

© Copyright Chevrolet. All rights reserved

T18 Battery Charger X3

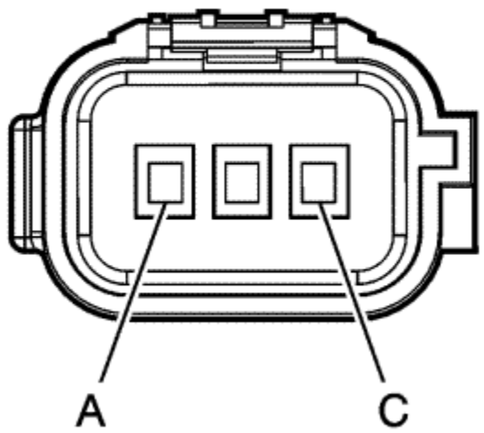

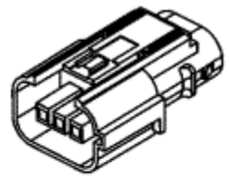

Connector Part Information

Harness Type: Forward Lamp
OEM Connector: 13737750
Service Connector: Service by Harness - See Part Catalog
Description: 3-Way F (OG)

Terminal Part Information

Terminated Lead: Service by Harness - Pending
Release Tool: Pending
Diagnostic Test Probe: Pending

T18 Battery Charger X3

Pin	Size	Colour	Circuit	Function	Option
A	2	L-BU	3837	Voltage AC Line 1	-
B	2	L-GN	3952	Voltage AC Ground	-
C	2	WH	3838	Voltage AC Neutral Line 2	-

© Copyright Chevrolet. All rights reserved

T18 Battery Charger X4

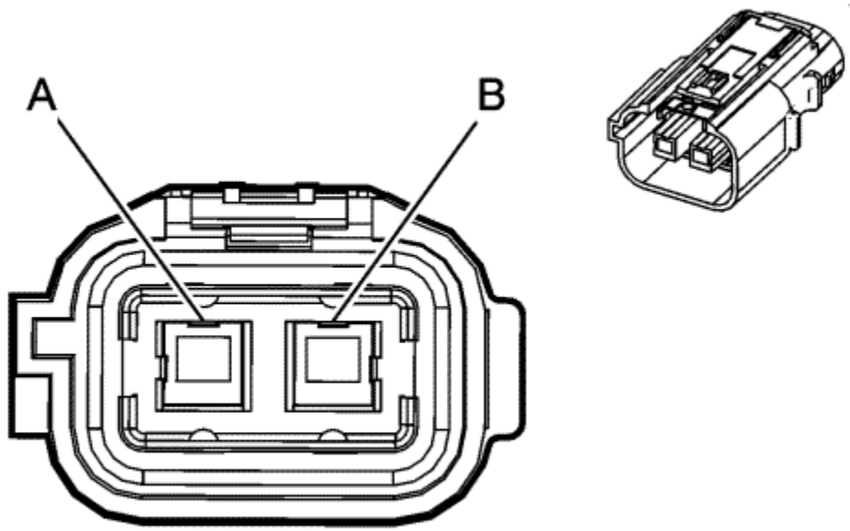

Connector Part Information

Harness Type: High Voltage
OEM Connector: 13737729
Service Connector: Service by Harness - See Part Catalog
Description: 2-Way F (OG)

Terminal Part Information

Terminated Lead: Service by Harness - See Part Catalog
Release Tool: Service by Harness - See Part Catalog
Diagnostic Test Probe: Service by Harness - See Part Catalog

T18 Battery Charger X4

Pin	Size	Colour	Circuit	Function	Option
A	2.0	OG	5084	High-Voltage Battery (+)	-
B	2.0	OG	5083	High-Voltage Battery (-)	-

© Copyright Chevrolet. All rights reserved

X80H Accessory Power Receptacle - Centre Console

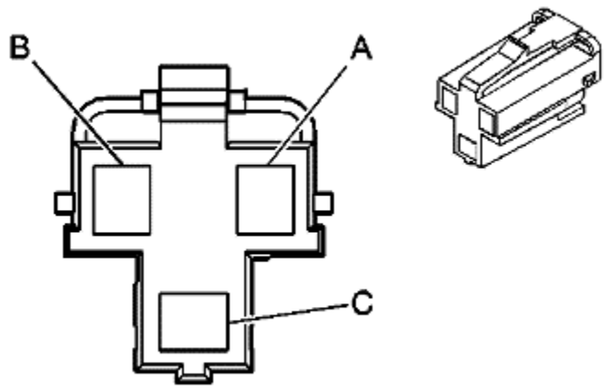

Connector Part Information

Harness Type: Console
OEM Connector: 12176836
Service Connector: 19257374
Description: 3-Way F Metri-Pack 280 Series (GY)

Terminal Part Information

Terminated Lead: 13575721
Release Tool: J-38125-553
Diagnostic Test Probe: J-35616-4A (PU)

X80H Accessory Power Receptacle - Centre Console

Pin	Size	Colour	Circuit	Function	Option
A	1	VT	1701	Retained Accessory Power Fuse Supply Voltage	-
B	--	--	--	Not Used	--
C	1	BK	2150	Ground	-

© Copyright Chevrolet. All rights reserved

X80L Accessory Power Receptacle - Rear Console

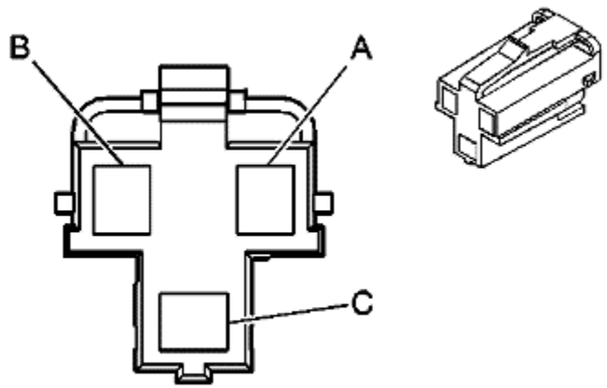

Connector Part Information

Harness Type: Body
OEM Connector: 12176836
Service Connector: 19257374
Description: 3-Way F Metri-Pack 280 Series (GY)

Terminal Part Information

Terminated Lead: Service by Connector Assembly - 19257374
Release Tool: J-38125-553
Diagnostic Test Probe: J-35616-4A (PU)

X80L Accessory Power Receptacle - Rear Console

Pin	Size	Colour	Circuit	Function	Option
A	1	VT	1701	Retained Accessory Power Fuse Supply Voltage	-
B	--	--	--	Not Used	--
C	1	BK	850	Ground	-

© Copyright Chevrolet. All rights reserved

X83 Auxiliary Audio Input

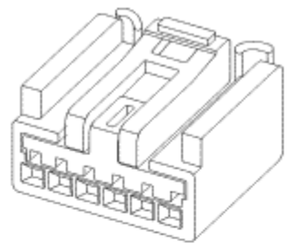

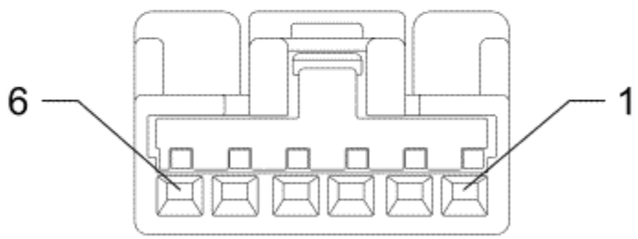

Connector Part Information

Harness Type: Console
OEM Connector: 15269798
Service Connector: 19167753
Description: 6-Way F AIT II Series (BK)

Terminal Part Information

Terminated Lead: 13575867
Release Tool: J-38125-215A
Diagnostic Test Probe: J-35616-64B (L-BU)

X83 Auxiliary Audio Input

Pin	Size	Colour	Circuit	Function	Option
1	0.35	BN	5839	Left Auxiliary Audio Signal (2)	--

2	0.35	YE	5841	Right Auxiliary Audio Signal (2)	--
3	0.35	BK	5843	Auxiliary Audio Common Signal	--
4	--	--	--	Not Used	--
5	0.5	L-BU	2060	Auxiliary Detection Signal	—
6	--	--	--	Not Used	--

© Copyright Chevrolet. All rights reserved

X84 Data Link Connector

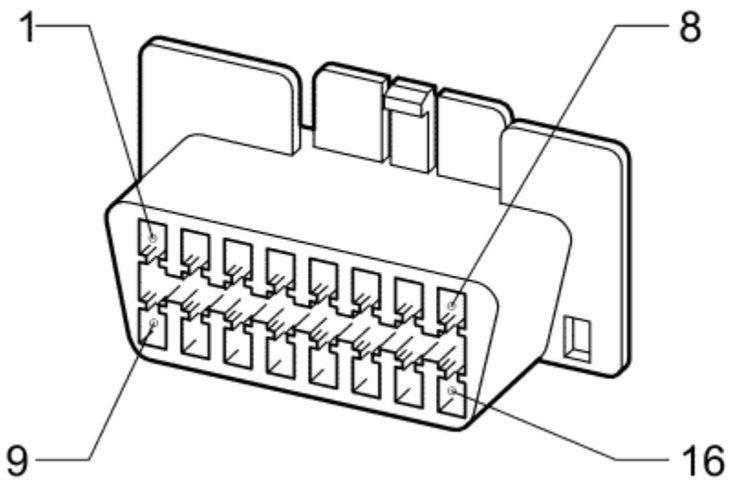

Connector Part Information

Harness Type: Instrument Panel
OEM Connector: 15317575
Service Connector: 15317575
Description: 16-Way F Metri-Pack/150 Series (BK)

Terminal Part Information

Pins: 1, 4, 5, 12, 13 and 16
Terminated Lead: 13575725
Release Tool: J-38125-12A
Diagnostic Test Probe: J-35616-14 (GN)

Pins: 6, 14
Terminated Lead: Pending
Release Tool: Pending
Diagnostic Test Probe: J-35616-14 (GN)

X84 Data Link Connector

Pin	Size	Colour	Circuit	Function	Option
1	0.5	L-GN	5060	Low Speed GMLAN Serial Data	-
2-3	--	--	--	Not Used	--
4	0.5	BK	1750	Ground	-
5	0.5	BK	1750	Ground	-
6	0.5	L-BU	2500	High Speed GMLAN Serial Data (+) (1)	-
	0.5	L-BU	2500	High Speed GMLAN Serial Data (+) (1)	-
7-11	--	--	--	Not Used	--
12	0.5	L-BU/YE	6105	High Speed GMLAN Serial Data (+) (2)	-
	0.5	L-BU/YE	6105	High Speed GMLAN Serial Data (+) (2)	-
13	0.5	WH	6106	High Speed GMLAN Serial Data (-) (2)	--
	0.5	WH	6106	High Speed GMLAN Serial Data (-) (2)	--
14	0.5	WH	2501	High Speed GMLAN Serial Data (-) (1)	-
	0.5	WH	2501	High Speed GMLAN Serial Data (-) (1)	-
15	--	--	--	Not Used	--
16	0.5	RD/L-GN	1840	Battery Positive Voltage	-

© Copyright Chevrolet. All rights reserved

X84B Auxiliary Data Connector

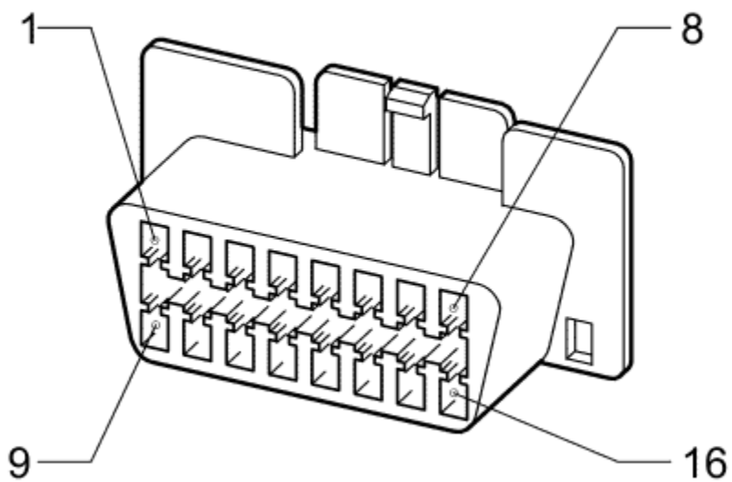

Connector Part Information

Harness Type: Instrument Panel
OEM Connector: 15317575
Service Connector: 15317575
Description: 16-Way F Metri-Pack/150 Series (BK)

Terminal Part Information

Terminated Lead: Pins 3-5, 8, 11, 16 - 13575725
Terminated Lead: Pins 12, 13 - Pending
Release Tool: J-38125-12A
Diagnostic Test Probe: J-35616-14 (GN)

X84B Auxiliary Data Connector

Pin	Size	Colour	Circuit	Function	Option
1-2	--	--	--	Not Used	--

3	0.5	L-BU/L-GN	6433	CAN Bus High Serial Data	--
4	0.5	BK	2150	Ground	--
5	0.5	BK	2150	Ground	—
6-7	--	--	--	Not Used	--
8	0.5	BK	2150	Ground	-
9-10	--	--	--	Not Used	--
11	0.5	WH	6432	CAN Bus Low Serial Data	-
12	0.5	L-BU/BK	7493	High Speed GMLAN Serial Data (+)(3)	-
	0.5	L-BU/BK	7493	High Speed GMLAN Serial Data (+)(3)	-
13	0.5	WH	7494	High Speed GMLAN Serial Data (-)(3)	-
	0.5	WH	7494	High Speed GMLAN Serial Data (-)(3)	-
14-15	--	--	--	Not Used	--
16	0.5	RD/L-GN	1840	Battery Positive Voltage	-

© Copyright Chevrolet. All rights reserved

X85 Steering Wheel Air Bag Coil X1

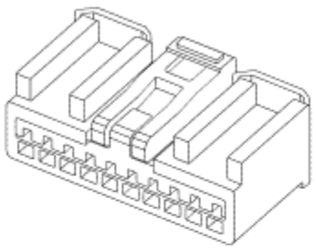

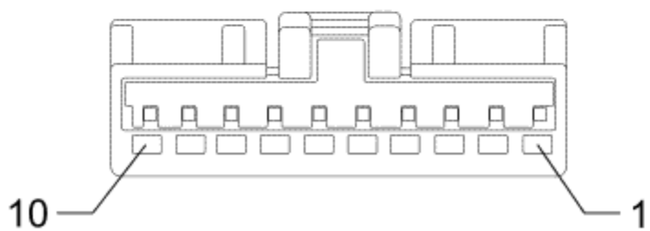

Connector Part Information

Harness Type: Instrument Panel
OEM Connector: AIT2PB-10-1AK
Service Connector: 13576634
Description: 10-Way F AIT II Series (BK)

Terminal Part Information

Terminated Lead: 13575867
Release Tool: J-38125-215A
Diagnostic Test Probe: J-35616-64B (L-BU)

X85 Steering Wheel Air Bag Coil X1

Pin	Size	Colour	Circuit	Function	Option
1	0.35	L-GN/WH	3287	Horn Switch Signal	-

2	0.5	BK	1650	Ground	--
3	0.35	BN/L-GN	1884	Cruise Control Set/Coast/Resume/Accelerate Switch Signal	-
4	0.35	L-GN/WH	6819	Steering Wheel Resistor Ladder Signal #2	—
5	0.35	WH/RD	1444	12 Volt Reference	—
6	0.5	YE	6817	LED Backlight Dimming Control	-
7-10	--	--	--	Not Used	--

© Copyright Chevrolet. All rights reserved

X85 Steering Wheel Air Bag Coil X3

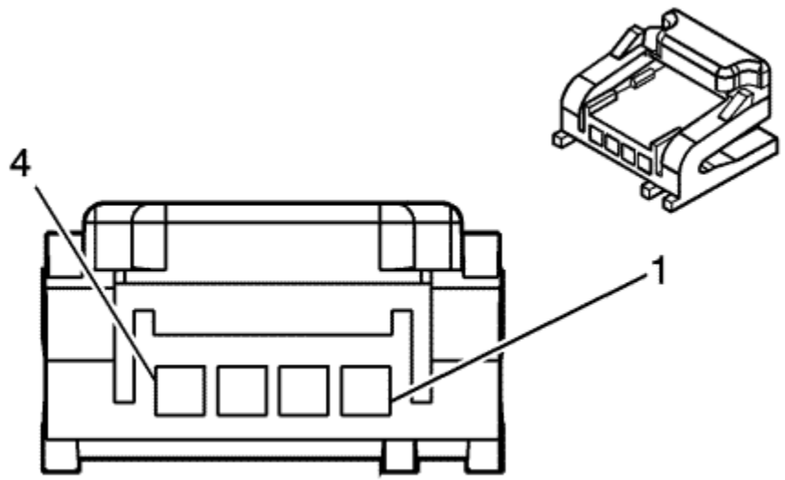

Connector Part Information

Harness Type: Instrument Panel
OEM Connector: 15393421
Service Connector: 88987853
Description: 4-Way F Micro-Pack 064 Series (YE)

Terminal Part Information

Terminated Lead: Service by Connector Assembly - 88987853
Release Tool: J-38125-559
Diagnostic Test Probe: J-35616-64B (L-BU)

X85 Steering Wheel Air Bag Coil X3

Pin	Size	Colour	Circuit	Function	Option
1	0.75	OG/VT	3021	Steering Wheel Module Stage 1 High Control	-
2	0.75	BN/OG	3020	Steering Wheel Module Stage 1 Low Control	--
3	0.75	OG/BK	3023	Steering Wheel Module Stage 2 High Control	-
4	0.75	WH/OG	3022	Steering Wheel Module Stage 2 Low Control	-

© Copyright Chevrolet. All rights reserved

X85 Steering Wheel Air Bag Coil X2

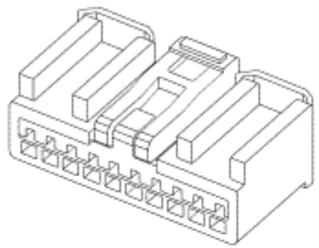

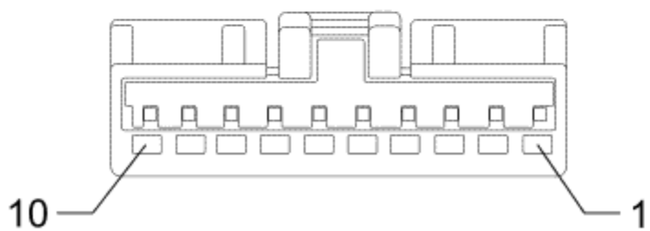

Connector Part Information

Harness Type: Steering Wheel
OEM Connector: AIT2PB-10-1AK
Service Connector: 13576634
Description: 10-Way F AIT II Series (BK)

Terminal Part Information

Terminated Lead: 13575867
Release Tool: J-38125-215A
Diagnostic Test Probe: J-35616-64B (L-BU)

X85 Steering Wheel Air Bag Coil X2

Pin	Size	Colour	Circuit	Function	Option
1-4	--	--	--	Not Used	--

5	0.35	YE	6817	LED Backlight Dimming Control	-
	0.35	YE	6817	LED Backlight Dimming Control	-
6	0.35	WH/RD	1444	12 Volt Reference	-
	0.35	WH/RD	1444	12 Volt Reference	--
7	0.35	D-GN	6819	Steering Wheel Resistor Ladder Signal #2	-
8	0.35	BN/D-GN	1884	Cruise Control Set/Coast/Resume/Accelerate Switch Signal	-
9	0.35	BK	1650	Ground	-
	0.35	BK	1650	Ground	-
10	0.75	BN/WH	3287	Horn Switch Signal	-

© Copyright Chevrolet. All rights reserved

X98 Hybrid Battery Charger Receptacle

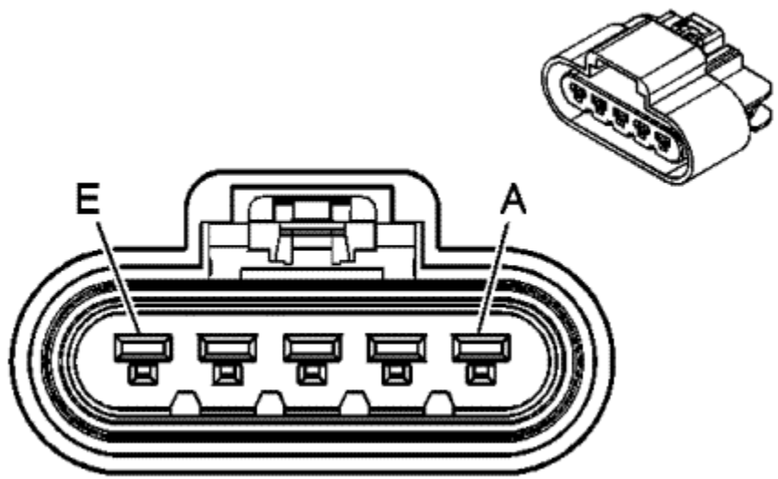

Connector Part Information

Harness Type: Forward Lamp
OEM Connector: 13795302
Service Connector: 13577539
Description: 5-Way F Sealed (OG)

Terminal Part Information

Pins: A, C and E
Terminated Lead: Service by Connector Assembly - Pending
Release Tool: J-38125-553
Diagnostic Test Probe: J-35616-4A (PU)

Pins: B, D
Terminated Lead: Service by Connector Assembly - Pending
Release Tool: J-38125-553
Diagnostic Test Probe: J-35616-4A (PU)

X98 Hybrid Battery Charger Receptacle

Pin	Size	Colour	Circuit	Function	Option

A	2	WH	3838	Voltage AC Neutral Line 2	-
B	0.5	GY/L-GN	3954	Control Pilot Signal 1	-
C	2	L-GN	3952	Voltage AC Ground	--
D	0.5	L-BU/YE	3953	Proximity Status Signal 1	-
E	2	L-BU	3837	Voltage AC Line 1	-

© Copyright Chevrolet. All rights reserved

X100 Forward Lamp Harness to Front Fascia Harness (with UD5)

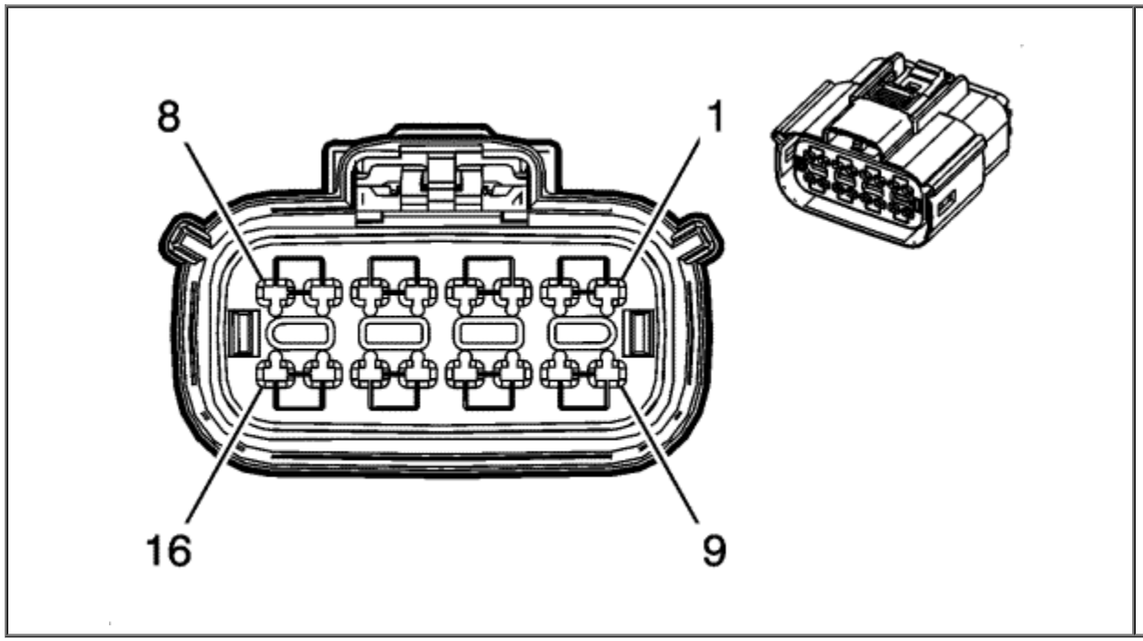

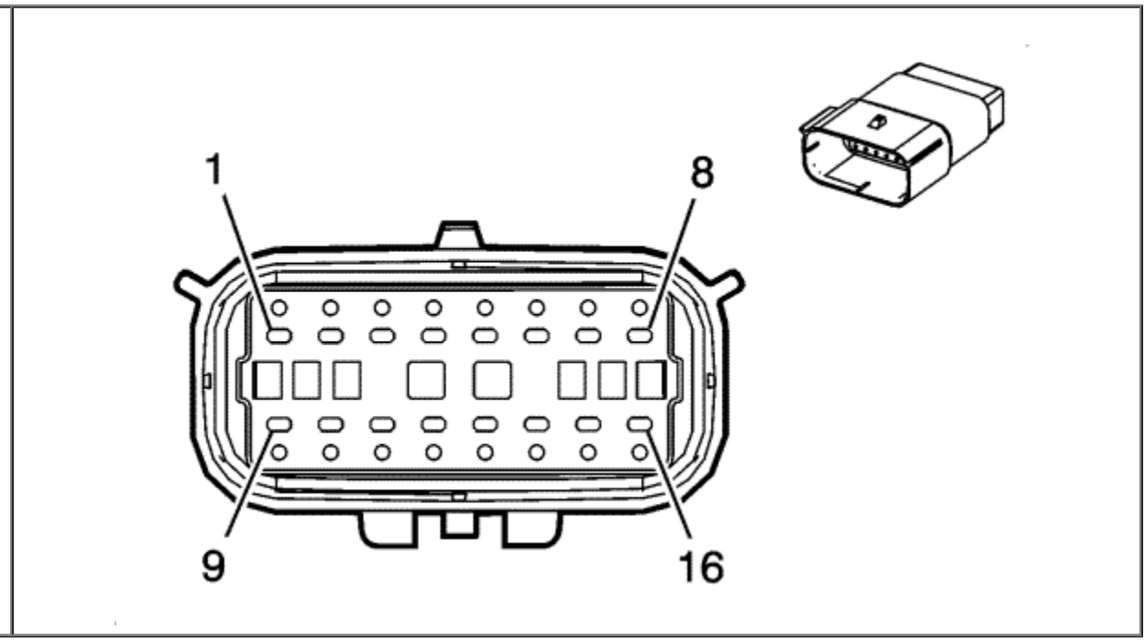

Connector Part Information

Harness Type: Forward Lamp
OEM Connector: 54241638
Service Connector: 13577550
Description: 16-Way F (BK)

Terminal Part Information

Terminated Lead: 13579989
Release Tool: Pending
Diagnostic Test Probe: Pending

Connector Part Information

Harness Type: Front Fascia
OEM Connector: 54241618
Service Connector: Service by Harness - See Part Catalog
Description: 16-Way M (BK)

Terminal Part Information

Terminated Lead: Service by Harness - See Part Catalog
Release Tool: Service by Harness - See Part Catalog
Diagnostic Test Probe: Pending

X100 Forward Lamp Harness to Front Fascia Harness (with UD5)

Pin	Size	Colour	Circuit	Option	Function	Pin	Size	Colour	Circuit	Option
1	--	--	--	--	Not Available	1	--	--	--	--
2	0.5	BK/L-BU	5214	-	Low Reference	2	0.5	BK/L-BU	5214	--
3	0.5	VT/WH	5215	-	Front Parking Left Corner Sensor	3	0.5	VT/WH	5215	-
4	0.5	YE/GY	5216	-	Front Parking Left Mid Sensor	4	0.5	YE/GY	5216	--
5	0.5	WH/GY	5217	-	Front Parking Right Corner Sensor	5	0.5	WH/GY	5217	--
6	0.5	VT/GY	5218	-	Front Parking Right Mid Sensor	6	0.5	VT/GY	5218	-
7	0.5	BK	1150	--	Ground	7	0.5	BK	1150	--
8-9	--	--	--	--	Not Available	8-9	--	--	--	-
10	--	--	--	--	Not Used	10	--	--	--	--
11	0.5	VT	1203	--	Right Park Lamp Supply Voltage	11	0.5	VT	1203	-
12	0.5	WH/YE	1204	-	Left Park Lamp Supply Voltage	12	0.5	WH/YE	1204	-
13	0.5	L-GN/VT	1315	-	Right Front Indicator Lamp Supply Voltage	13	0.5	L-GN/VT	1315	-
14	0.5	L-BU/WH	1314	-	Left Front Indicator Lamp Supply Voltage	14	0.5	L-BU/WH	1314	--
15	--	--	--	--	Not Used	15	--	--	--	--
16	0.5	RD/L-BU	5974	-	Park Assist Sensor Supply Voltage Park	16	0.5	RD/L-BU	5974	-

© Copyright Chevrolet. All rights reserved

X101 Front Fascia Harness to Forward Lamp Harness (without UD5)

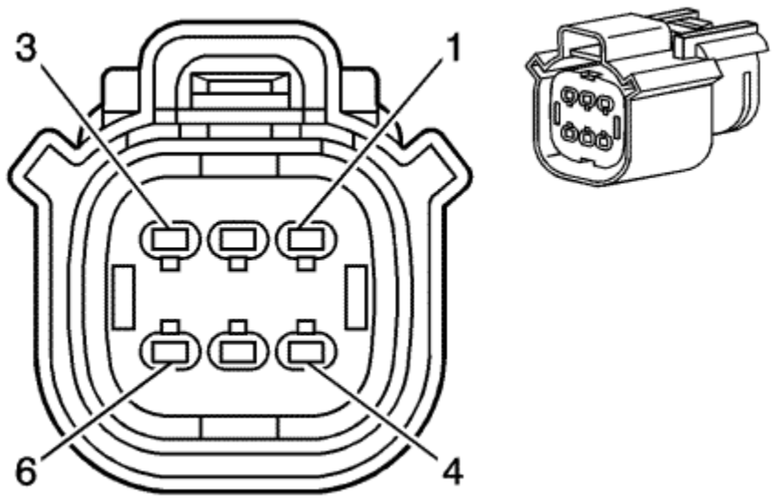

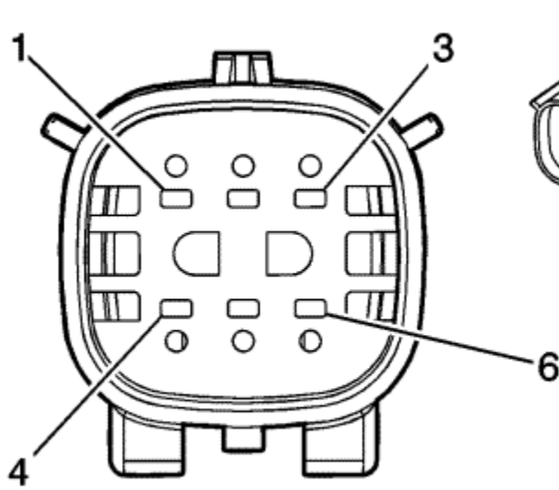

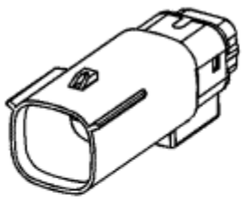

Connector Part Information

Harness Type: Forward Lamp
OEM Connector: 33472-0611
Service Connector: 19178087
Description: 6-Way F MX150 Series, Sealed (BK)

Terminal Part Information

Terminated Lead: Service by Connector Assembly - 19178087
Release Tool: J-38125-217
Diagnostic Test Probe: J-35616-14 (GN)

Connector Part Information

Harness Type: Front Fascia
OEM Connector: 33482-0606
Service Connector: 13576414
Description: 6-Way M MX150 Series, Sealed (BK)

Terminal Part Information

Terminated Lead: Service by Connector Assembly - 13576414
Release Tool: J-38125-217
Diagnostic Test Probe: J-35616-3 (GY)

X101 Front Fascia Harness to Forward Lamp Harness (without UD5)

Pin	Size	Colour	Circuit	Option	Function	Pin	Size	Colour	Circuit	Option
1	0.5	VT	1203	--	Right Park Lamp Supply Voltage	1	0.5	VT	1203	-
2	0.5	WH/YE	1204	-	Left Park Lamp Supply Voltage	2	0.5	WH/YE	1204	--
3	--	--	--	--	Not Used	3	--	--	--	--
4	0.5	L-GN/VT	1315	-	Right Front Indicator Lamp Supply Voltage	4	0.5	L-GN/VT	1315	--
5	0.5	L-BU/WH	1314	-	Left Front Indicator Lamp Supply Voltage	5	0.5	L-BU/WH	1314	--
6	0.5	BK	1150	--	Ground	6	0.5	BK	1150	-

© Copyright Chevrolet. All rights reserved

X102 Engine Harness to Cooling Fan Harness

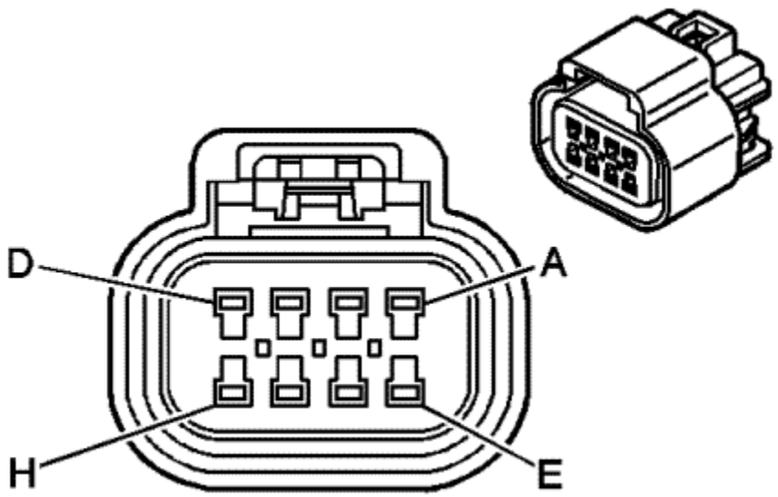

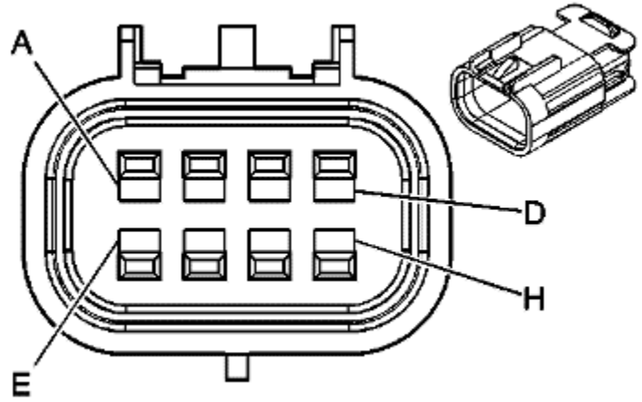

Connector Part Information

Harness Type: Engine
OEM Connector: 13545280
Service Connector: 88986255
Description: 8-Way F GT 150 Series, Sealed (BK)

Terminal Part Information

Terminated Lead: Service by Connector Assembly - 88986255
Release Tool: J-38125-553
Diagnostic Test Probe: J-35616-2A (GY)

Connector Part Information

Harness Type: Cooling Fan
OEM Connector: 15326840
Service Connector: Service by Harness - See Part Catalog
Description: 8-Way M GT 150 Sealed 4.0 (BK)

Terminal Part Information

Terminated Lead: Pins A-E - 13575397
Terminated Lead: Pin F - 13576364
Release Tool: J-38125-553
Diagnostic Test Probe: J-35616-3 (GY)

X102 Engine Harness to Cooling Fan Harness

Pin	Size	Colour	Circuit	Option	Function	Pin	Size	Colour	Circuit	Option
A	0.5	YE/BK	3000	-	Coolant Temperature Sensor #2 Signal	A	0.5	YE/BK	3000	-
B	0.5	BK/L-BU	6813	-	Low Reference	B	0.5	BK/L-BU	6813	--
C	0.5	BK/BN	5514	-	Low Reference	C	0.5	BK/BN	5514	-
D	0.5	BN/RD	2700	-	5 Volt Reference	D	0.5	BN/RD	2700	-
E	0.5	L-GN	380	-	A/C Refrigerant Pressure Sensor Signal	E	0.5	L-GN	380	--
F	0.75	RD/L-BU	3940	--	Battery Positive Voltage	F	0.75	RD/L-BU	3940	-
G-H	--	--	--	--	Not Used	G-H	--	--	--	-

© Copyright Chevrolet. All rights reserved

X103 Forward Lamp Harness to Cooling Fan Harness

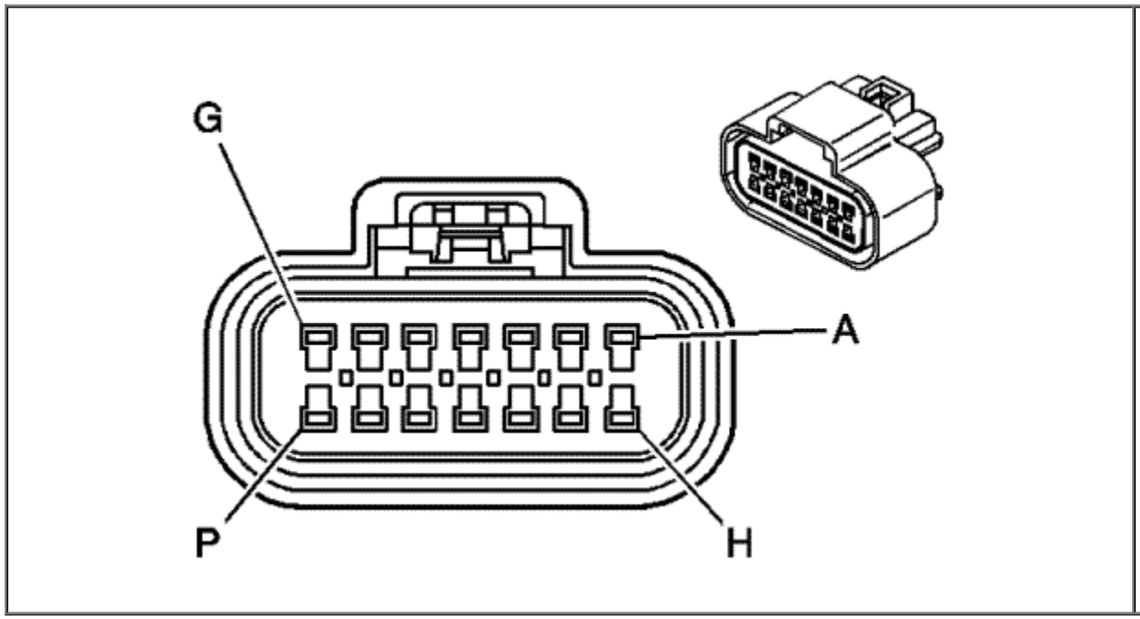

Connector Part Information

Harness Type: Forward Lamp
OEM Connector: 15326856
Service Connector: 88986261
Description: 14-Way F GT 150 Series, Sealed (BK)

Terminal Part Information

Terminated Lead: Pins A, G, H - 13575413
Terminated Lead: Pins J - 13327113
Terminated Lead: Pins C-E, K-M - 13327112
Release Tool: J-38125-553
Diagnostic Test Probe: J-35616-2A (GY)

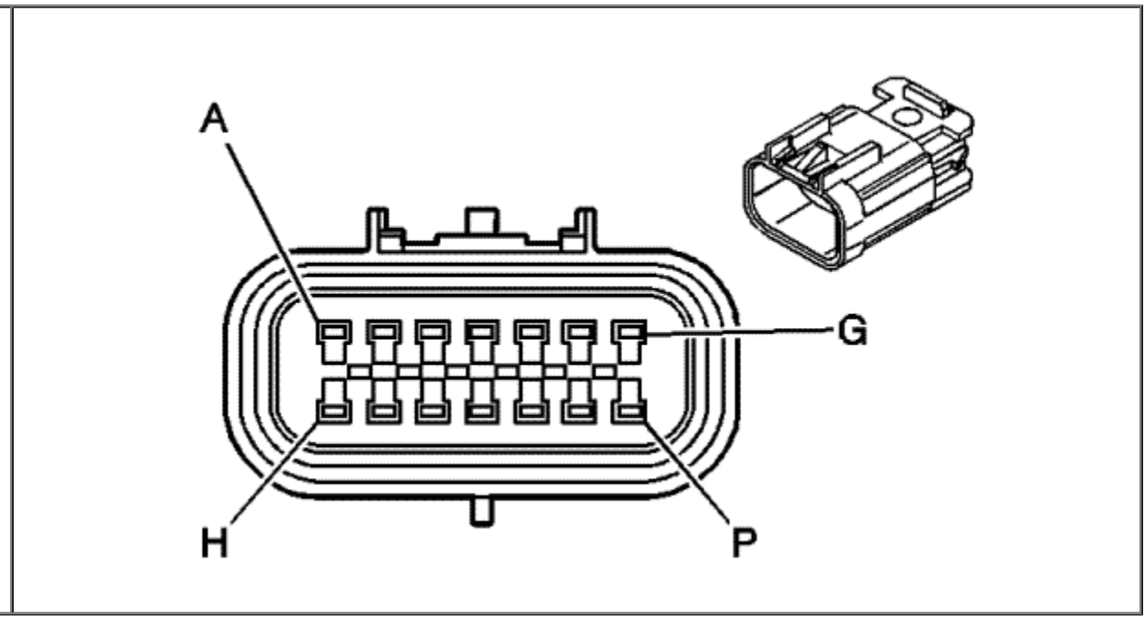

Connector Part Information

Harness Type: Cooling Fan
OEM Connector: 15326861
Service Connector: 88986246
Description: 14-Way M GT 150 Series, Sealed (BK)

Terminal Part Information

Terminated Lead: Pins J - 13576364
Terminated Lead: Pins A, C-E, G, H and K-M - 13575397
Release Tool: J-38125-553
Diagnostic Test Probe: J-35616-3 (GY)

X103 Forward Lamp Harness to Cooling Fan Harness

Pin	Size	Colour	Circuit	Option	Function	Pin	Size	Colour	Circuit	Option
A	0.5	WH	2368	-	Cooling Fan Control Signal	A	0.5	WH	2368	-
B	--	--	--	--	Not Used	B	--	--	--	--
C	0.35	BN/L-BU	3788	-	Electric Coolant Motor Enable	C	0.5	BN/L-BU	3788	--
D	0.35	YE/L-GN	3789	-	Electric Coolant Motor Control	D	0.5	YE/L-GN	3789	-
E	0.35	VT/L-BU	3790	-	Electric Coolant Motor Feedback Signal	E	0.5	VT/L-BU	3790	-
F	--	--	--	--	Not Used	F	--	--	--	--
G	0.5	L-GN/VT	2032	-	Coolant Temperature Sensor Signal	G	0.5	L-GN/VT	2032	--
H	0.5	BK/YE	407	-	Low Reference	H	0.5	BK/YE	407	-
J	0.75	RD/VT	3340	--	Battery Positive Voltage	J	0.75	RD/VT	3340	-
K	0.35	WH/L-GN	3794	-	Rechargeable Energy Storage System 1 Coolant Motor Enable	K	0.5	WH/L-GN	3794	--
L	0.35	L-BU/VT	3795	-	Rechargeable Energy Storage System 1 Coolant Motor Control	L	0.5	L-BU/VT	3795	-
M	0.35	YE/GY	3796	-	Rechargeable Energy Storage System 1 Coolant Motor Feedback Signal	M	0.5	YE/GY	3796	-
N-P	--	--	--	--	Not Used	N-P	--	--	--	-

© Copyright Chevrolet. All rights reserved

X104 Cooling Fans to Cooling Fan Harness

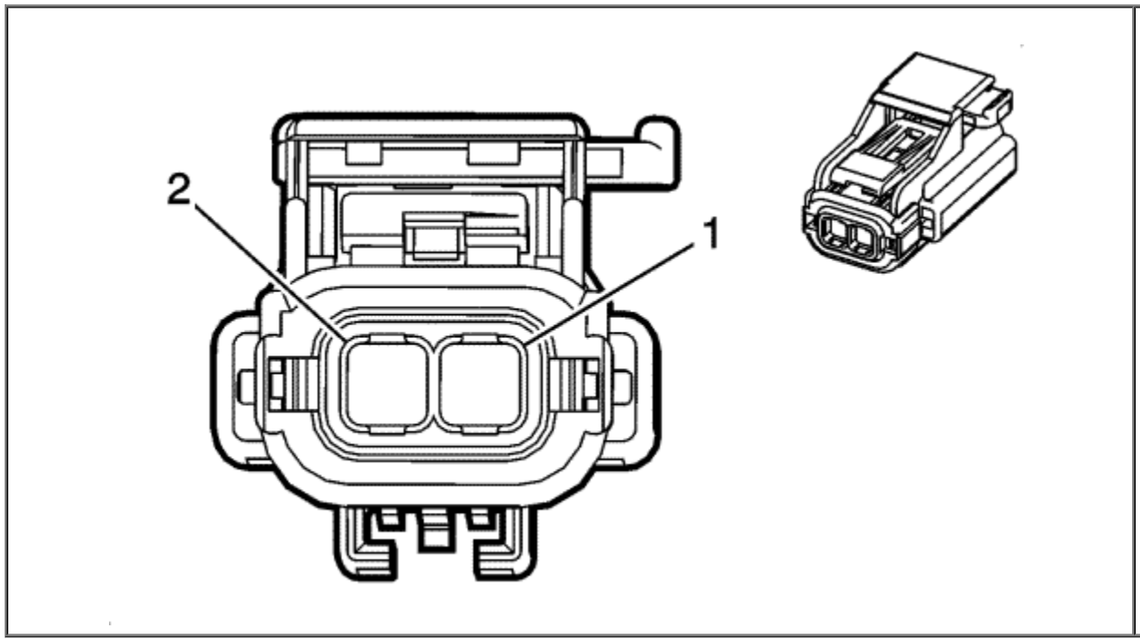

Connector Part Information

Harness Type: Forward Lamp
OEM Connector: 54200213
Service Connector: 13577540
Description: 2-Way F (BK)

Terminal Part Information

Terminated Lead: Service by Connector Assembly - 13577540
Release Tool: Pending
Diagnostic Test Probe: Pending

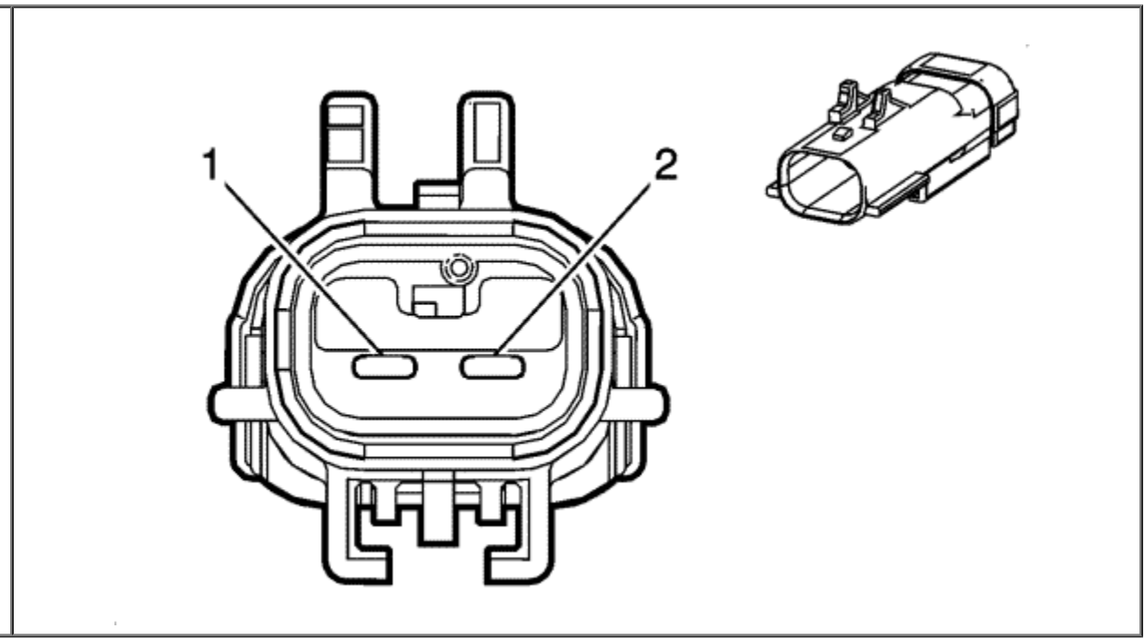

Connector Part Information

Harness Type: Cooling Fan
OEM Connector: 54200215
Service Connector: Service by Harness - See Part Catalog
Description: 2-Way M (BK)

Terminal Part Information

Terminated Lead: Service by Harness - See Part Catalog
Release Tool: Service by Harness - See Part Catalog
Diagnostic Test Probe: Service by Harness - See Part Catalog

X104 Cooling Fans to Cooling Fan Harness

Pin	Size	Colour	Circuit	Option	Function	Pin	Size	Colour	Circuit	Option
1	3	RD/WH	140	-	Battery Positive Voltage	1	4	RD/WH	140	-
2	3	RD/L-BU	540	--	Battery Positive Voltage	2	4	RD/L-BU	540	-

© Copyright Chevrolet. All rights reserved

X105 Forward Lamp Harness to Body Harness

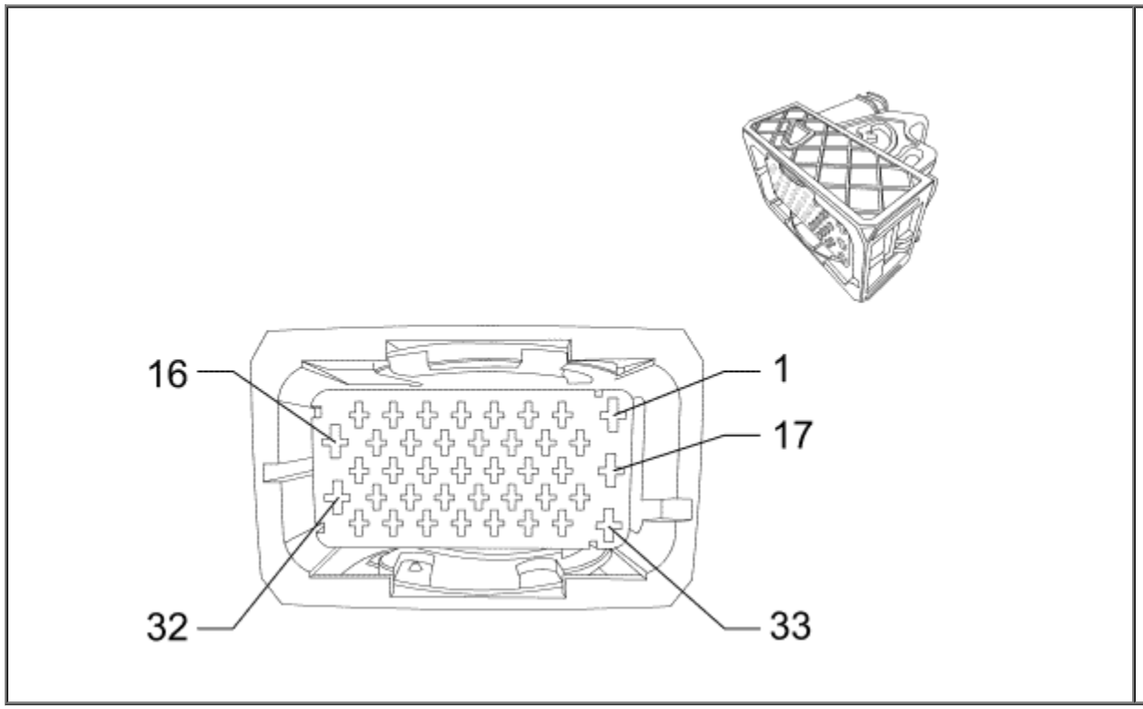

Connector Part Information

Harness Type: Forward Lamp
OEM Connector: 13603185
Service Connector: 13576549
Description: 40-Way F 1.5/2.8 Series, Sealed (BK)

Terminal Part Information

Pins: 2-7, 9-15, 18, 20, 21, 25-27, 36-39

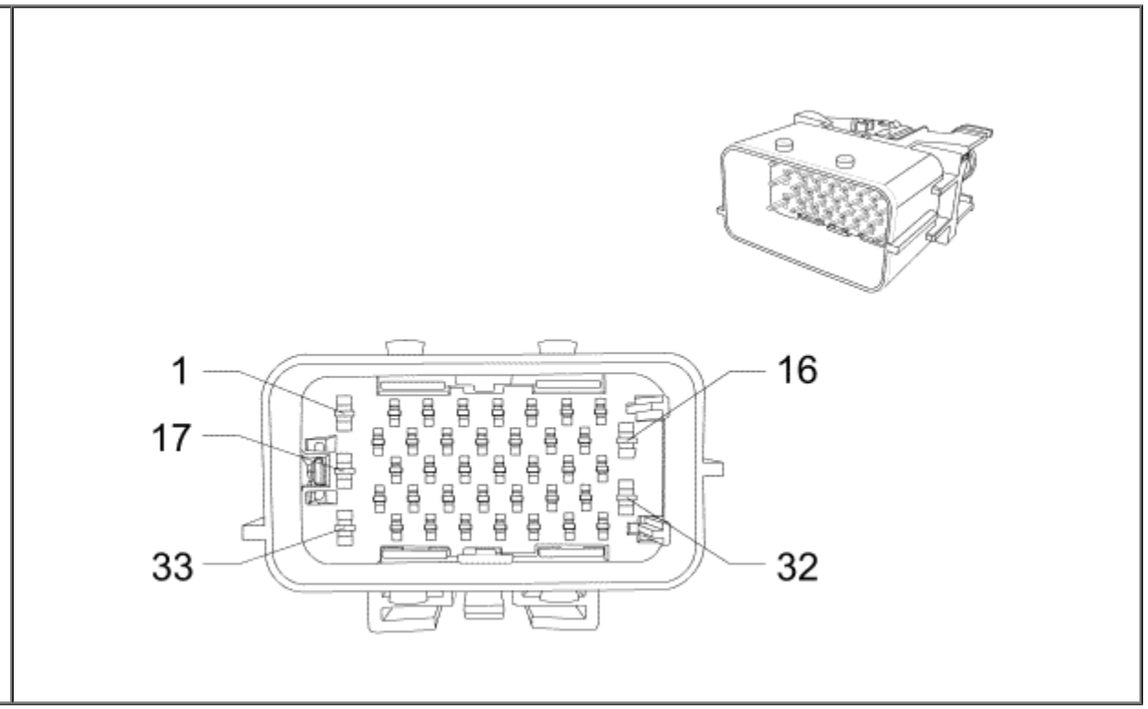

Connector Part Information

Harness Type: Body
OEM Connector: 13603205
Service Connector: 13576552
Description: 40-Way M 1.5/2.8 Series, Sealed (BK)

Terminal Part Information

Pins: 2-7, 9-12, 15, 18, 20, 21, 28, 36-39
Terminated Lead: 13575380
Release Tool: J-38125-560
Diagnostic Test Probe: J-35616-3 (GY)

Terminated Lead: 13327180
Release Tool: J-38125-560
Diagnostic Test Probe: J-35616-14 (GN)

Pins: 28, 32
Terminated Lead: 13327155
Release Tool: J-38125-36
Diagnostic Test Probe: J-35616-35 (VT)

Pins: 13, 14, 25-27
Terminated Lead: 13575380
Release Tool: J-38125-560
Diagnostic Test Probe: J-35616-3 (GY)

Pins: 32
Terminated Lead: Pending
Release Tool: J-38125-36
Diagnostic Test Probe: J-35616-5 (PU)

X105 Forward Lamp Harness to Body Harness

Pin	Size	Colour	Circuit	Option	Function	Pin	Size	Colour	Circuit	Option
1	--	--	--	--	Not Used	1	--	--	--	--
2	0.5	GY	830	-	Wheel Speed Sensor Signal Left Front	2	0.5	GY	830	-
3	0.5	BK/GY	873	-	Low Reference	3	0.5	BK/GY	873	--
4	0.5	YE	872	-	Wheel Speed Sensor Signal Right Front	4	0.5	YE	872	-
5	0.5	BK/YE	833	-	Low Reference	5	0.5	BK/YE	833	-
6	0.5	OG/YE	354	-	Left Front Discriminating Sensor Signal	6	0.5	OG/YE	354	-
7	0.5	BK/OG	5045	-	Low Reference	7	0.5	BK/OG	5045	--
8	--	--	--	--	Not Used	8	--	--	--	--
9	0.5	OG/L-GN	1409	-	Right Front Discriminating Sensor Signal	9	0.5	OG/L-GN	1409	--
10	0.5	L-GN	5600	-	Low Reference	10	0.5	L-GN	5600	--
11	0.5	GY/VT	5595	-	High-Voltage Interlock Loop Signal (2)	11	0.5	GY/VT	5595	-
12	0.5	GY/VT	5595	-	High-Voltage Interlock Loop Signal (2)	12	0.5	GY/VT	5595	-
13	0.5	GY/L-GN	3954	-	Control Pilot Signal 1	13	0.35	GY/L-GN	3954	-
14	0.5	L-BU/YE	3953	-	Proximity Status Signal 1	14	0.35	L-BU/YE	3953	--
15	0.5	L-BU/WH	3977	-	Accessory Wake-up Serial Data 2	15	0.5	L-BU/WH	3977	-
16-17	--	--	--	--	Not Used	16-17	--	--	--	--
18	0.5	L-BU/L-GN	3787	-	High-Voltage Energy Management Communication Enable	18	0.5	L-BU/BN	3787	-
19	--	--	--	--	Not Used	19	--	--	--	--
20	0.5	L-BU/L-GN	6433	-	CAN Bus High Serial Data	20	0.5	L-BU/L-GN	6433	--
21	0.5	WH	6432	-	CAN Bus Low Serial Data	21	0.5	WH	6432	-
22-24	--	--	--	--	Not Used	22-24	--	--	--	--

25	0.5	L-GN/GY	3853	-	Cabin Heater Coolant Motor Enable	25	0.35	L-GN/GY	3853	-
26	0.5	VT/YE	3854	-	Cabin Heater Coolant Motor Control	26	0.35	VT/YE	3854	-
27	0.5	BN/L-BU	3852	-	Cabin Heater Coolant Motor Feedback Signal	27	0.35	BN/L-BU	3852	-
28	0.75	RD/WH	3440	--	Battery Positive Voltage	28	0.75	RD/WH	3440	-
29-31	--	--	--	--	Not Used	29-31	--	--	--	--
32	2.5	BN/GY	29	--	Horn Control	32	2.5	BN/GY	29	--
33-35	--	--	--	--	Not Used	33-35	--	--	--	--
36	0.5	L-BU	2500	-	High Speed GMLAN Serial Data (+) (1)	36	0.5	L-BU	2500	-
37	0.5	WH	2501	-	High Speed GMLAN Serial Data (-) (1)	37	0.5	WH	2501	-
38	0.5	L-BU	2500	-	High Speed GMLAN Serial Data (+) (1)	38	0.5	L-BU	2500	--
39	0.5	WH	2501	-	High Speed GMLAN Serial Data (-) (1)	39	0.5	WH	2501	-
40	--	--	--	--	Not Used	40	--	--	--	-

© Copyright Chevrolet. All rights reserved

X107 Forward Lamp Harness to Body Harness

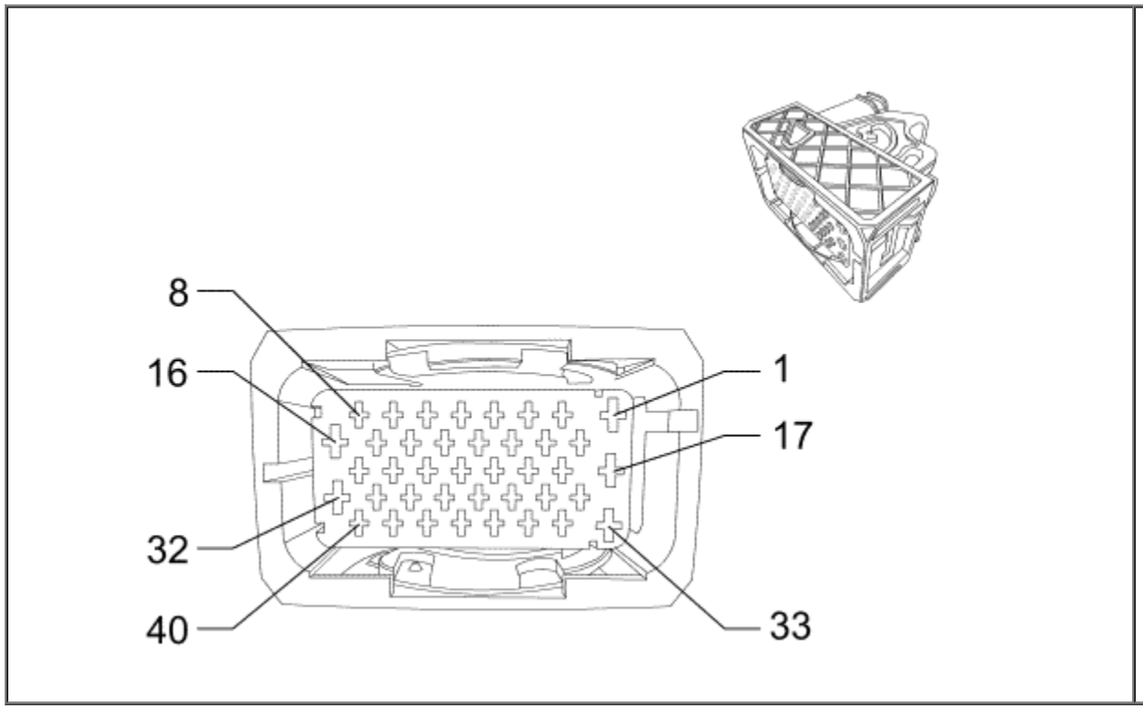

Connector Part Information

Harness Type: Forward Lamp
OEM Connector: 13603186
Service Connector: 13576550
Description: 40-Way F 1.5/2.8 Series, Sealed (GY)

Terminal Part Information

Pins: 2-15, 18-31, 34-39
Terminated Lead: Pins 2-7, 9-14, 26-31, 34-39 - 13327180

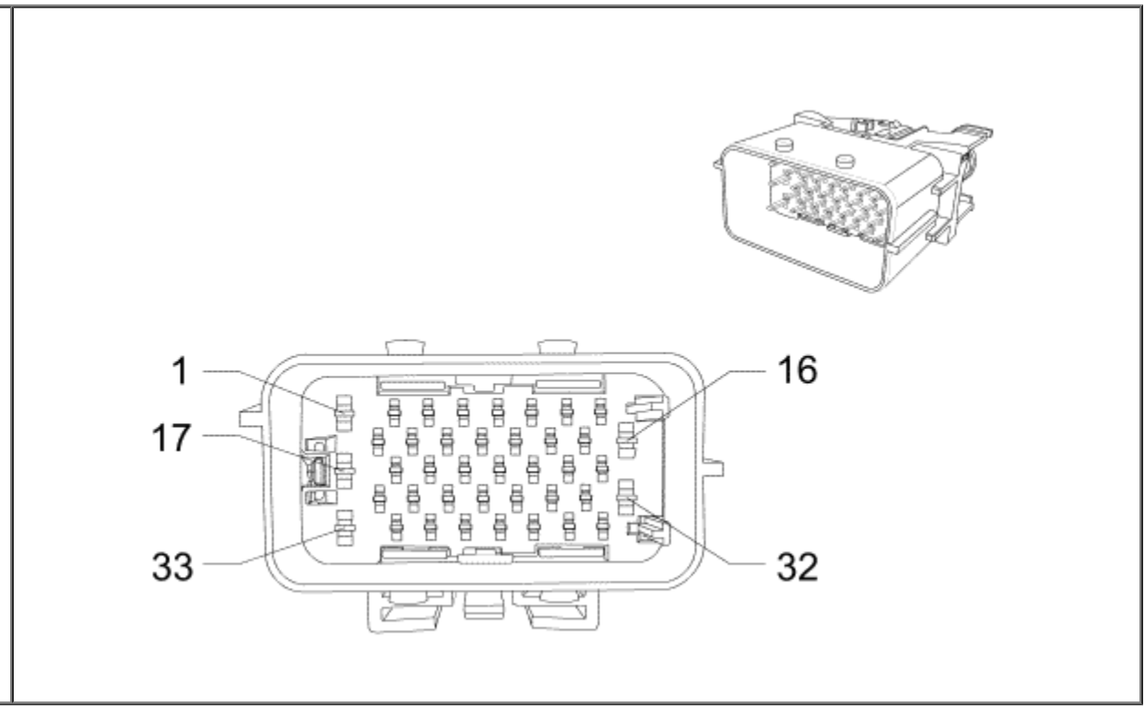

Connector Part Information

Harness Type: Body
OEM Connector: 13603206
Service Connector: 13576553
Description: 40-Way M 1.5/2.8 Series, Sealed (GY)

Terminal Part Information

Pins: 2, 3, 9-12, 15
Terminated Lead: 13575380
Release Tool: J-38125-560
Diagnostic Test Probe: J-35616-3 (GY)

Terminated Lead: Pins 8, 15, 18-23 - 13327179
Release Tool: J-38125-560
Diagnostic Test Probe: J-35616-14 (GN)

Pins: 16, 17, 32, 33
Terminated Lead: Pins 16, 17 - 13327154
Terminated Lead: Pins 32, 33 - 13327156
Release Tool: J-38125-36
Diagnostic Test Probe: J-35616-35 (VT)

Pins: 4, 6-8, 18-30, 34-39
Terminated Lead: 13578882
Release Tool: J-38125-560
Diagnostic Test Probe: J-35616-3 (GY)

Pins: 16, 17, 32, 33
Terminated Lead: Pending
Release Tool: J-38125-36
Diagnostic Test Probe: J-35616-5 (PU)

X107 Forward Lamp Harness to Body Harness

Pin	Size	Colour	Circuit	Option	Function	Pin	Size	Colour	Circuit	Option
1	--	--	--	--	Not Used	1	--	--	--	--
2	0.5	BN/L-GN	109	-	Bonnet Ajar Switch Signal	2	0.5	BN/L-GN	109	--
3	0.5	YE	5530	-	Bonnet Open Switch Signal	3	0.5	YE	5530	-
4	0.5	WH/L-BU	3697	-	Charge Port Door Sensor Signal	4	0.35	WH/L-BU	3697	--
5	--	--	--	--	Not Used	5	--	--	--	--
6	0.5	BK/L-BU	61	--	Outside Ambient Temperature Sensor Low Reference	6	0.35	BK/L-BU	61	--
7	0.5	L-BU/GY	636	-	Outside Ambient Air Temperature Sensor Signal	7	0.35	L-BU/GY	636	--
8	0.35	L-GN/BN	6132	-	Linear Interconnect Network Bus 1	8	0.35	L-GN/BN	6132	--
9	0.5	VT	185	-	Low Washer Fluid Indicator Control	9	0.5	VT	185	--
10	0.5	L-GN/VT	2032	-	Coolant Temperature Sensor Signal	10	0.5	L-GN/VT	2032	--
11	0.5	BK/YE	407	-	Low Reference	11	0.5	BK/YE	407	-
12	0.5	WH	2368	-	Cooling Fan Control Signal	12	0.5	WH	2368	-
13-14	--	--	--	--	Not Used	13-14	--	--	--	--
15	0.35	GY	91	-	Windscreen Wiper Motor Relay Coil Supply Voltage	15	0.5	GY	91	-
16	0.5	L-BU/WH	1314	-	Left Front Indicator Lamp Supply Voltage	16	0.5	L-BU/WH	1314	--
17	0.5	L-GN/VT	1315	-	Right Front Indicator Lamp Supply Voltage	17	0.5	GY/VT	1315	-
18	0.35	BN/L-BU	3788	-	Electric Coolant Motor Enable	18	0.35	BN/L-BU	3788	--
19	0.35	YE/L-GN	3789	-	Electric Coolant Motor Control	19	0.35	YE/L-GN	3789	-
20	0.35	VT/L-BU	3790	-	Electric Coolant Motor Feedback Signal	20	0.35	VT/L-BU	3790	--
21	0.35	WH/L-GN	3794	-	Rechargeable Energy Storage System 1 Coolant Motor Enable	21	0.35	WH/L-GN	3794	-
22	0.35	L-BU/VT	3795	-	Rechargeable Energy Storage System 1 Coolant Motor Control	22	0.35	L-BU/VT	3795	--

23	0.35	YE/GY	3796	-	Rechargeable Energy Storage System 1 Coolant Motor Feedback Signal	23	0.35	YE/GY	3796	-
24-25	--	--	--	--	Not Used	24-25	--	--	--	--
26	0.5	WH/YE	1204	-	Left Park Lamp Supply Voltage	26	0.35	WH/YE	1204	-
27	0.5	VT	1203	--	Right Park Lamp Supply Voltage	27	0.35	VT	1203	-
28	--	--	--	--	Not Used	28	--	--	--	--
29	0.5	GY/L-BU	7538	-	Left Front DRL Supply Voltage	29	0.35	GY/L-BU	7538	-
30	0.5	L-BU/BN	7539	-	Right Front DRL Supply Voltage	30	0.35	GY/L-BU	7539	-
31	--	--	--	--	Not Used	31	--	--	--	--
32	1	YE	712	-	Left Headlamp Low Beam Supply Voltage	32	1	YE	712	-
33	1	YE	312	-	Right Headlamp Low Beam Supply Voltage	33	1	YE	312	--
34	0.5	RD/L-BU	5974	-	Park Assist Sensor Supply Voltage Park	34	0.35	RD/L-BU	5974	-
35	0.5	BK/L-BU	5214	-	Low Reference	35	0.35	BK/L-BU	5214	--
36	0.5	VT/WH	5215	-	Front Parking Left Corner Sensor	36	0.35	VT/WH	5215	-
37	0.5	YE/GY	5216	-	Front Parking Left Mid Sensor	37	0.35	YE/GY	5216	--
38	0.5	VT/GY	5218	-	Front Parking Right Mid Sensor	38	0.35	VT/GY	5218	--
39	0.5	WH/GY	5217	-	Front Parking Right Corner Sensor	39	0.35	WH/GY	5217	-
40	--	--	--	--	Not Used	40	--	--	--	-

© Copyright Chevrolet. All rights reserved

X110 Forward Lamp Harness to Left Headlamp Assembly

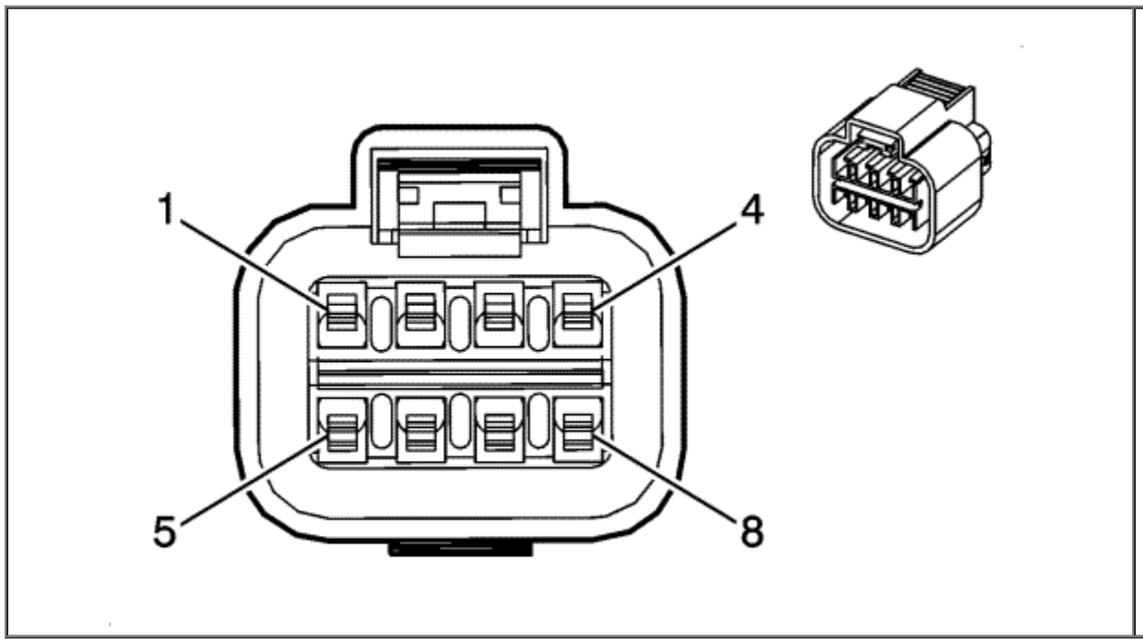

Connector Part Information

Harness Type: Forward Lamp
OEM Connector: PB625-08027
Service Connector: 13577541
Description: 8-Way F Sealed (BK)

Terminal Part Information

Terminated Lead: Service by Connector Assembly - 13577541
Release Tool: Not Available
Diagnostic Test Probe: J-35616-33 (YE)

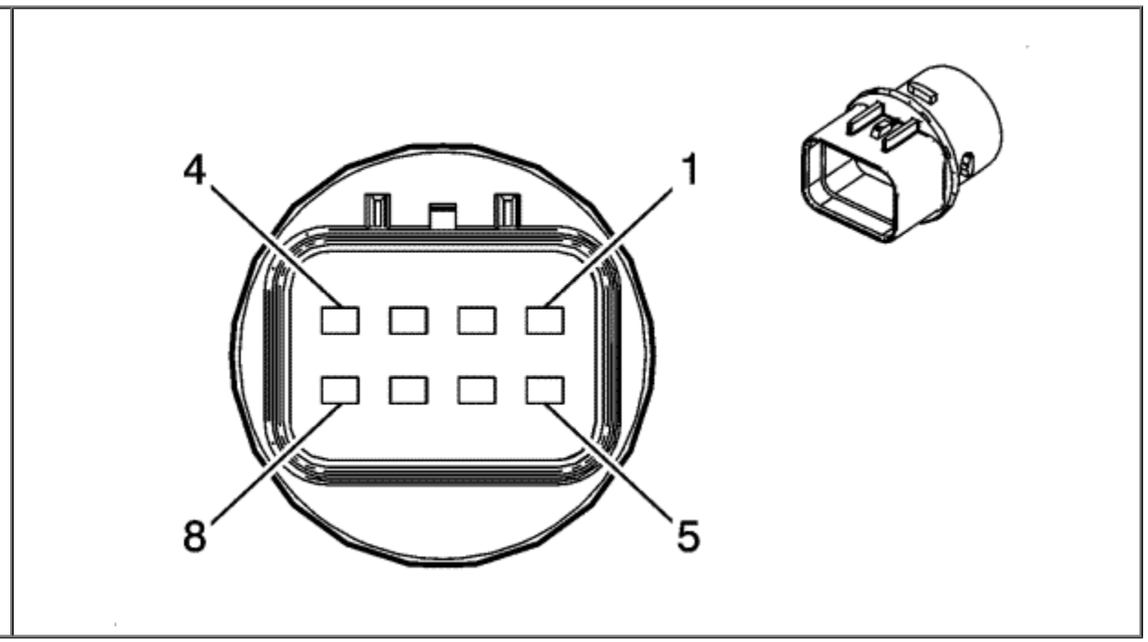

Connector Part Information

Harness Type: Left Headlamp Assembly
OEM Connector: Not Available
Service Connector: Service by Harness - See Part Catalog
Description: 8-Way M (BK)

Terminal Part Information

Terminated Lead: Service by Harness - See Part Catalog

X110 Forward Lamp Harness to Left Headlamp Assembly

Pin	Size	Colour	Circuit	Option	Function	Pin	Size	Colour	Circuit	Option
1	1	YE	712	-	Left Headlamp Low Beam Supply Voltage	1	1	YE	712	-
2	0.5	GY/L-BU	7538	-	Left Front DRL Supply Voltage	2	0.5	GY/L-BU	7538	--
3	0.5	WH	711	-	Left Headlamp Main beam Supply Voltage	3	0.5	WH	711	--
4	0.5	BK	1150	--	Ground	4	0.5	BK	1150	--
5	1	BK	1150	--	Ground	5	1	BK	1150	-
6-8	--	--	--	--	Not Used	6-8	--	--	--	--

© Copyright Chevrolet. All rights reserved

X120 Froward Lamp Harness to Right Headlamp Assembly

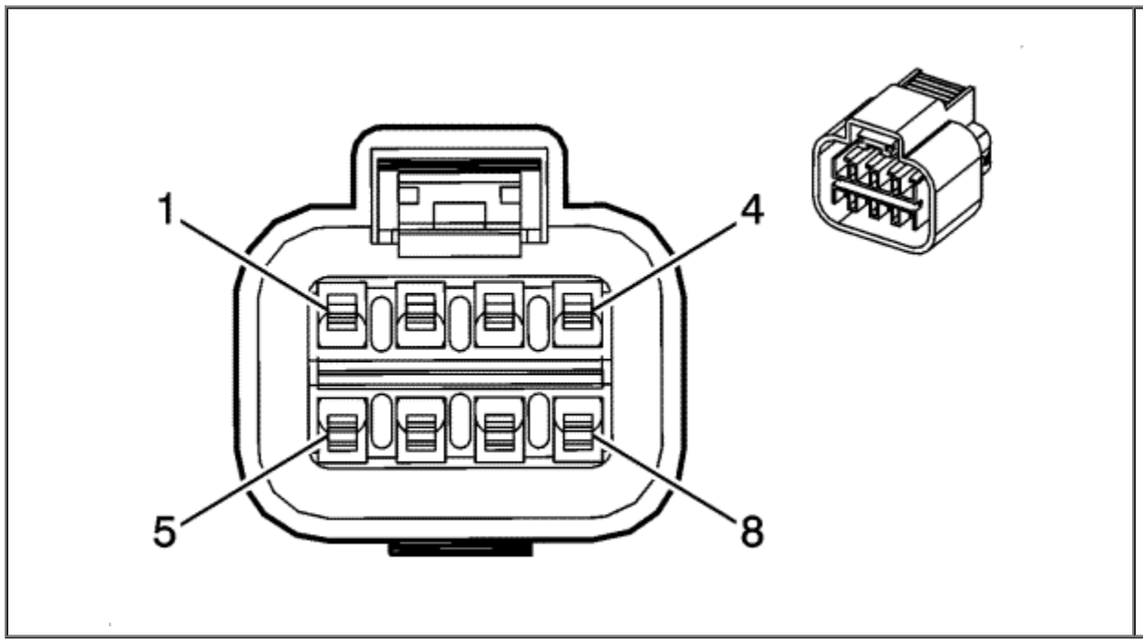

Connector Part Information

Harness Type: Forward Lamp
OEM Connector: PB625-08027
Service Connector: 13577541
Description: 8-Way F Sealed (BK)

Terminal Part Information

Terminated Lead: Service by Connector Assembly - 13577541
Release Tool: Not Available
Diagnostic Test Probe: J-35616-33 (YE)

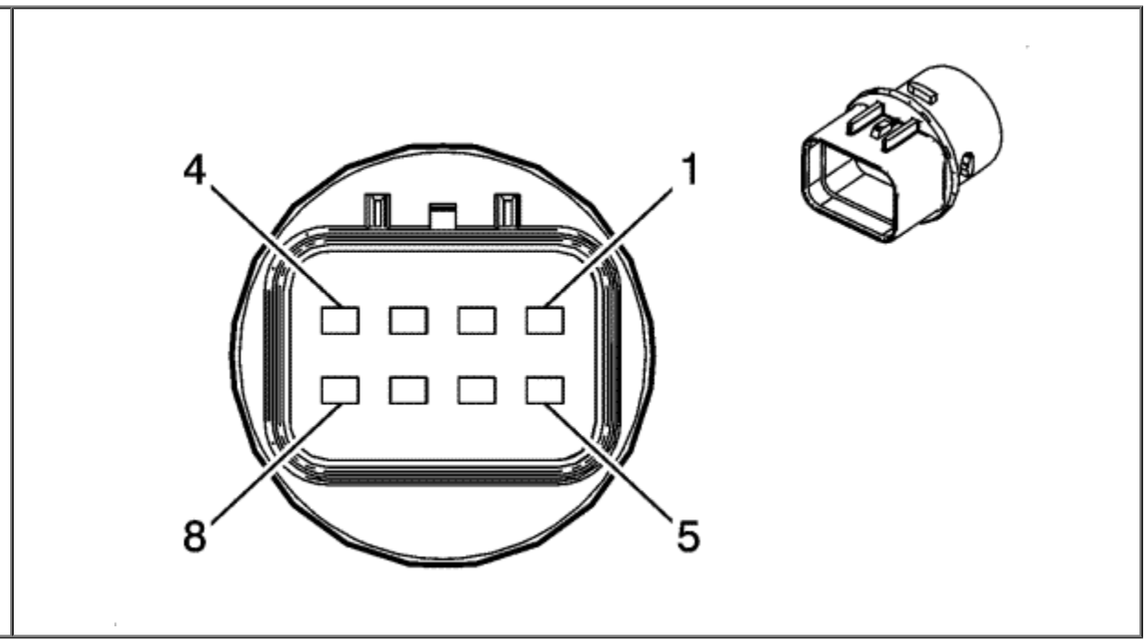

Connector Part Information

Harness Type: Right Headlamp Assembly
OEM Connector: Not Available
Service Connector: Service by Harness - See Part Catalog
Description: 8-Way M (BK)

Terminal Part Information

Terminated Lead: Service by Harness - See Part Catalog

X120 Froward Lamp Harness to Right Headlamp Assembly

Pin	Size	Colour	Circuit	Option	Function	Pin	Size	Colour	Circuit	Option
1	1	YE	312	-	Right Headlamp Low Beam Supply Voltage	1	1	YE	312	-
2	0.5	L-BU/BN	7539	-	Right Front DRL Supply Voltage	2	0.5	GY/L-BU	7539	--
3	0.5	WH	311	-	Right Headlamp Main beam Supply Voltage	3	0.5	WH	311	--
4	0.5	BK	1050	--	Ground	4	0.5	BK	1050	--
5	1	BK	1050	--	Ground	5	1	BK	1050	-
6-8	--	--	--	--	Not Used	6-8	--	--	--	--

© Copyright Chevrolet. All rights reserved

X175 Engine Harness to Transmission Harness

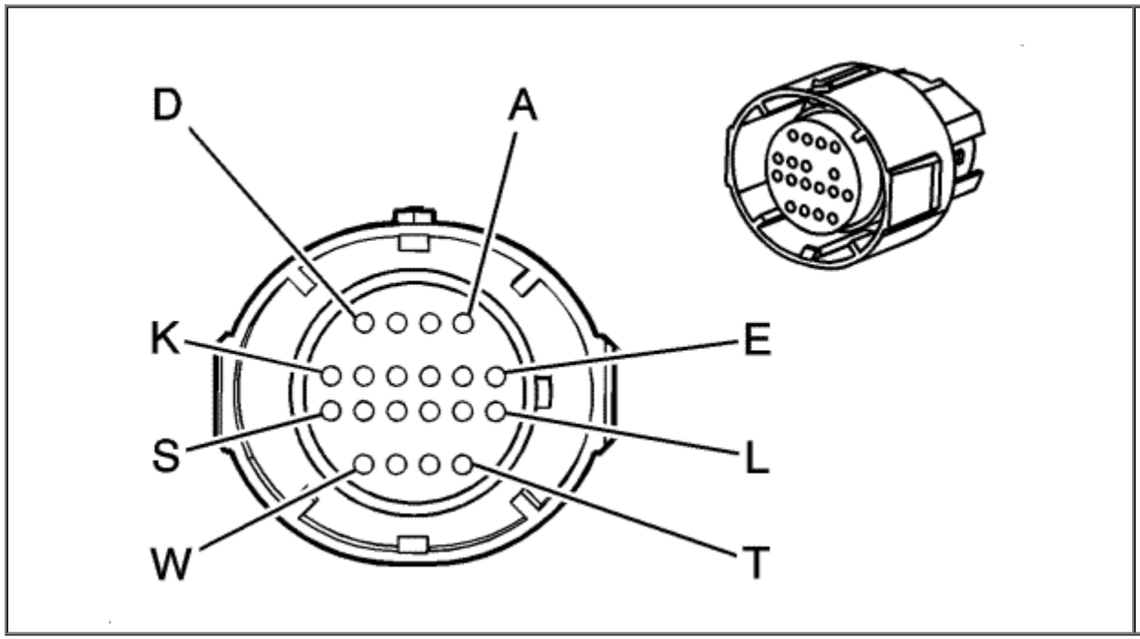

Connector Part Information

Harness Type: Engine
OEM Connector: 13603425
Service Connector: 13503284
Description: 20-Way F Micro-Pack 100 W Series, Sealed (BK)

Terminal Part Information

Terminated Lead: Pending
Release Tool: J-38125-33
Diagnostic Test Probe: J-35616-6 (BN)

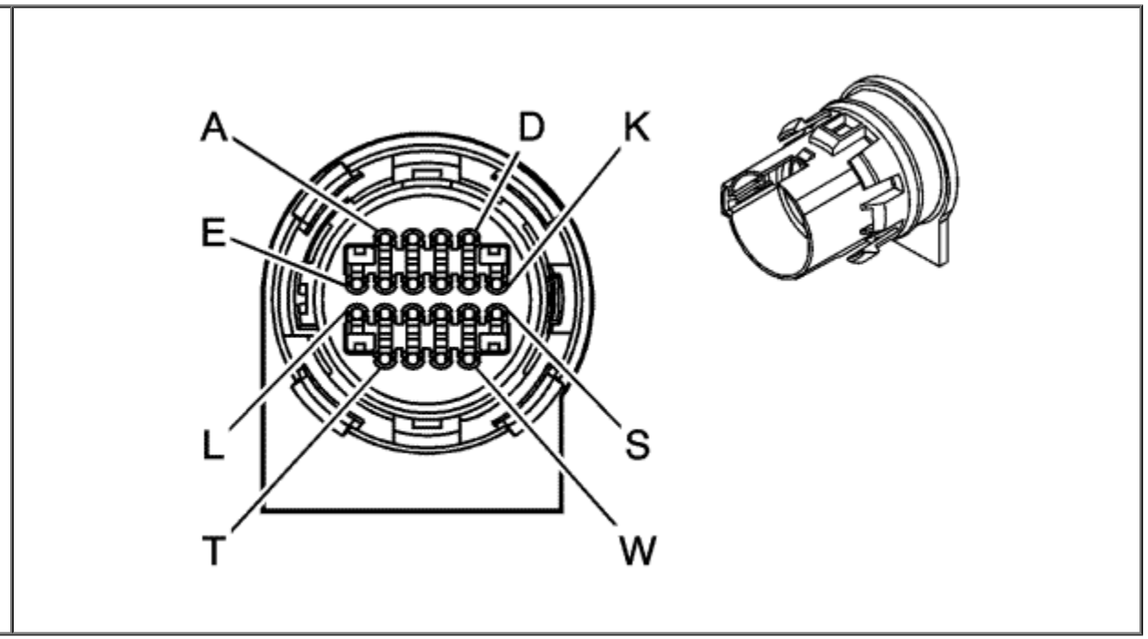

Connector Part Information

Harness Type: Transmission
OEM Connector: 15443076
Service Connector: Service by Harness - See Part Catalog
Description: 20-Way M Micro-Pack 100 W Series, Sealed (BK)

Terminal Part Information

Terminated Lead: Service by Harness - See Part Catalog
Release Tool: J-38125-33
Diagnostic Test Probe: J-35616-7 (BN)

X175 Engine Harness to Transmission Harness

Pin	Size	Colour	Circuit	Option	Function	Pin	Size	Colour	Circuit	Option
A	0.75	YE/RD	1673	-	12 Volt Reference	A	0.5	RD	901	-
B	0.75	VT	3493	-	Transmission IMS Mode Switch S bit Signal	B	0.5	D-GN	902	-
C	0.75	YE/BK	3494	-	Transmission IMS Mode Switch R1 bit Signal	C	0.5	YE	903	--
D	0.75	GY	3495	-	Transmission IMS Mode Switch R2 bit Signal	D	0.5	VT	904	-
E	0.75	BN	3496	-	Transmission IMS Mode Switch D1 bit Signal	E	0.5	L-BU	905	--
F	0.75	L-GN/BN	3497	-	Transmission IMS Mode Switch D2 bit Signal	F	0.5	GY	906	-
G	0.75	BK/WH	551	-	Signal Ground	G	0.5	BK	907	--
H	0.75	L-GN	7654	-	Drive Motor 2 Temperature Sensor Return	H	0.5	L-BU	918	-
J	0.75	WH/L-BU	7653	-	Drive Motor 2 Temperature Sensor Signal	J	0.5	GY	917	-
K	0.75	BN/WH	3489	-	Drive Motor 1 Temp Signal	K	0.5	YE	919	--
L	0.75	GY	3487	-	Drive Motor 1 S3 Signal	L	0.5	BK	910	--
M	0.75	L-BU/YE	3488	-	Drive Motor 1 S1 Signal	M	0.5	RD	911	-
N-R	--	--	--	--	Not Used	N-R	--	--	--	--
S	0.75	BN	3490	-	Drive Motor 1 Temp Sensor Return	S	0.5	VT	920	-
T	0.75	BN/YE	3492	-	Drive Motor 1 S4 Signal	T	0.5	D-GN	915	-
U	0.75	L-GN	3491	-	Drive Motor 1 S2 Signal	U	0.5	YE	914	-
V	0.75	WH/L-GN	3485	-	Drive Motor 1 Excitation Signal Negitive	V	0.5	GY	912	-
W	0.75	L-BU	3486	-	Drive Motor 1 Excitation Signal Positive	W	0.5	L-BU	913	-

© Copyright Chevrolet. All rights reserved

X180 Forward Lamp Harness to Auxiliary Heater Coolant Pump Harness

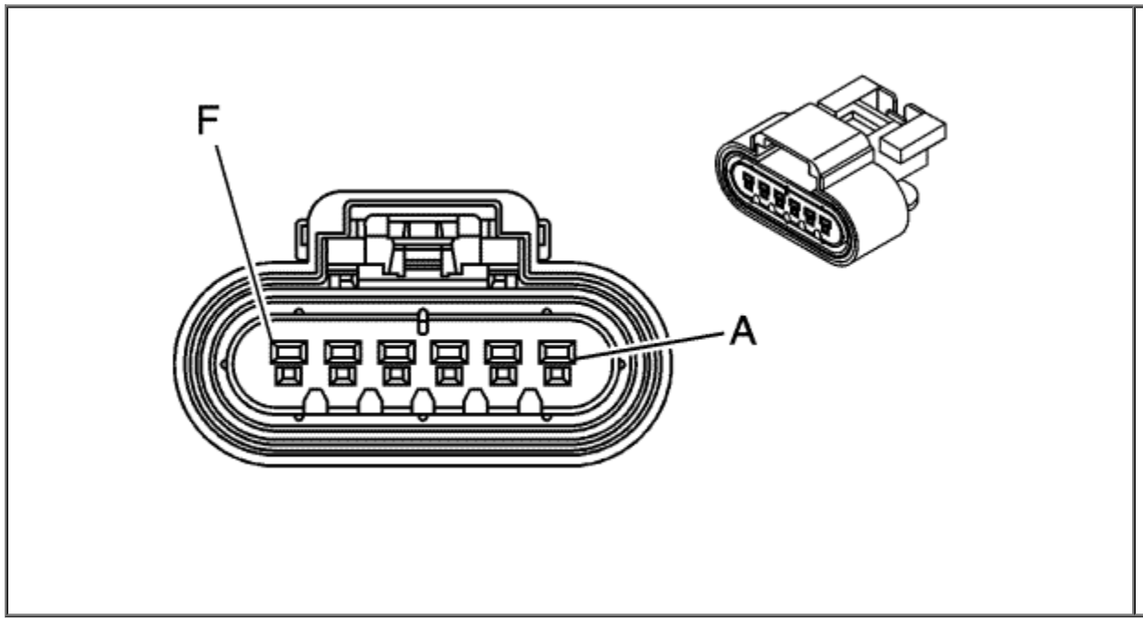

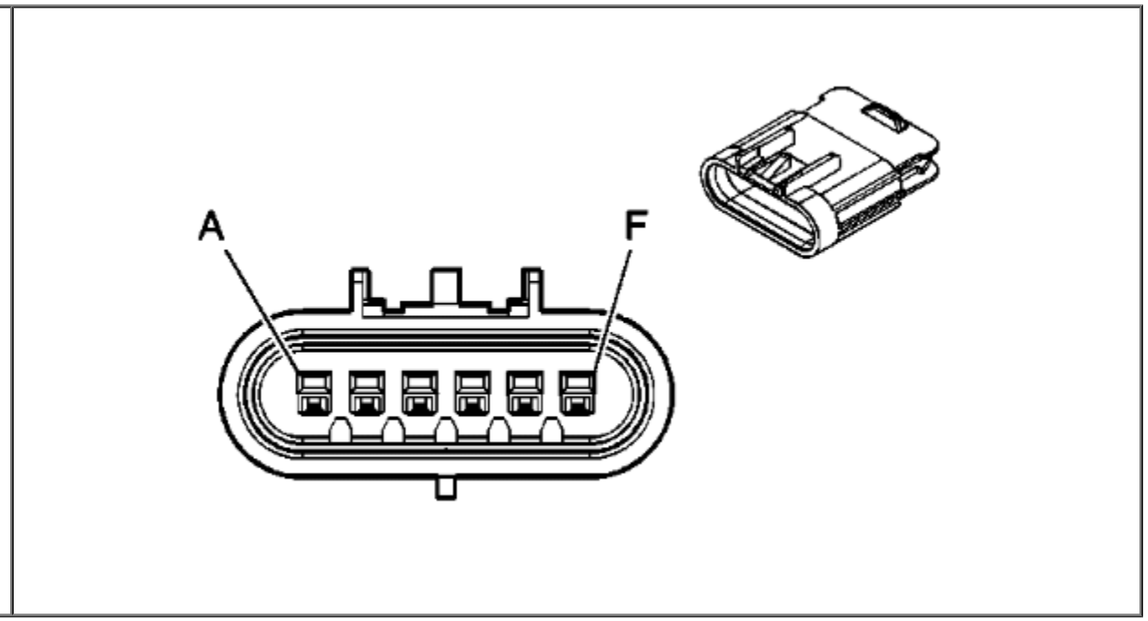

Connector Part Information

Harness Type: Forward Lamp
OEM Connector: 15326830
Service Connector: 88988944
Description: 6-Way F GT 150 Series, Sealed (BK)

Terminal Part Information

Terminated Lead: Service by Connector Assembly - 88988944
Release Tool: J-38125-553
Diagnostic Test Probe: J-35616-2A (GY)

Connector Part Information

Harness Type: Auxiliary Heater Coolant Pump
OEM Connector: 15326833
Service Connector: 15326833
Description: 6-Way M GT 150 Series, Sealed (BK)

Terminal Part Information

Terminated Lead: 13575397
Release Tool: J-38125-553
Diagnostic Test Probe: J-35616-3 (GY)

X180 Forward Lamp Harness to Auxiliary Heater Coolant Pump Harness

Pin	Size	Colour	Circuit	Option	Function	Pin	Size	Colour	Circuit	Option
A	0.5	L-GN/GY	3853	-	Cabin Heater Coolant Motor Enable	A	0.5	L-GN/GY	3853	-
B	0.5	VT/YE	3854	-	Cabin Heater Coolant Motor Control	B	0.5	VT/YE	3854	-
C	0.5	BN/L-BU	3852	-	Cabin Heater Coolant Motor Feedback Signal	C	0.5	BN/L-BU	3852	--
D	0.75	RD/WH	3440	--	Battery Positive Voltage	D	0.75	RD/WH	3440	-
E	0.5	BK	1050	--	Ground	E	0.5	BK	1050	--
F	--	--	--	--	Not Used	F	--	--	--	-

© Copyright Chevrolet. All rights reserved

X190 Engine Harness to Body Harness

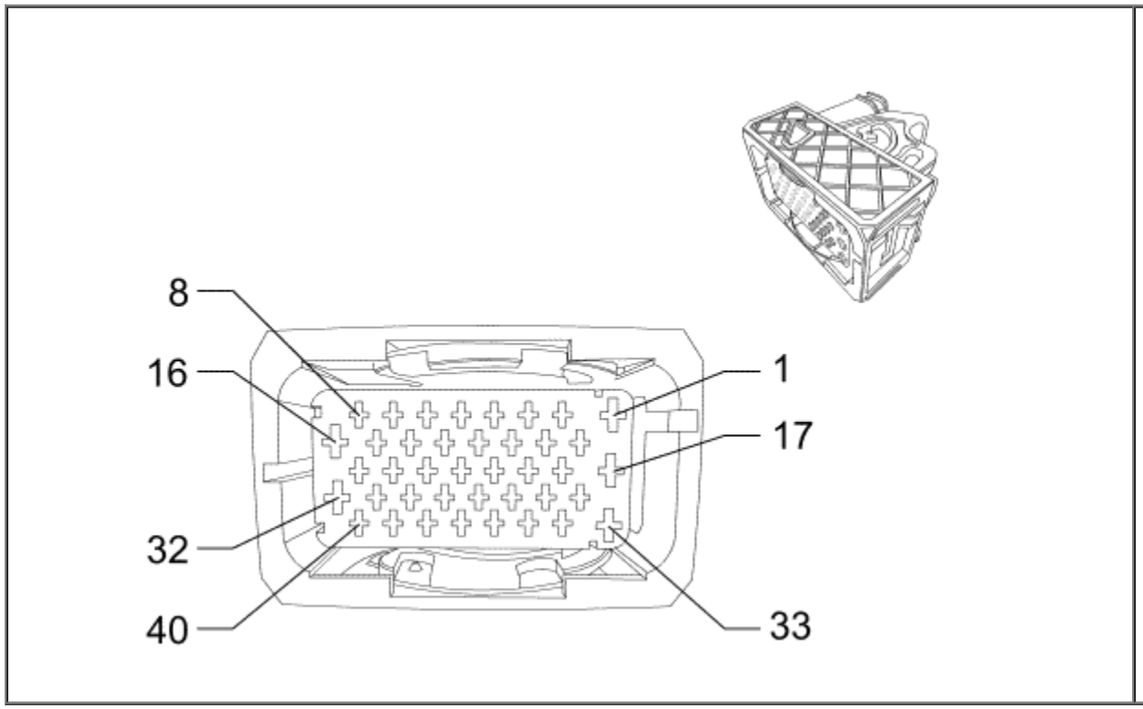

Connector Part Information

Harness Type: Engine
OEM Connector: 13603186
Service Connector: 13576550
Description: 40-Way F 1.5/2.8 Series, Sealed (GY)

Terminal Part Information

Pins: 2-10, 12-15, 18-26, 28-31, 34-40
Terminated Lead: 13327180
Release Tool: J-38125-560
Diagnostic Test Probe: J-35616-14 (GN)

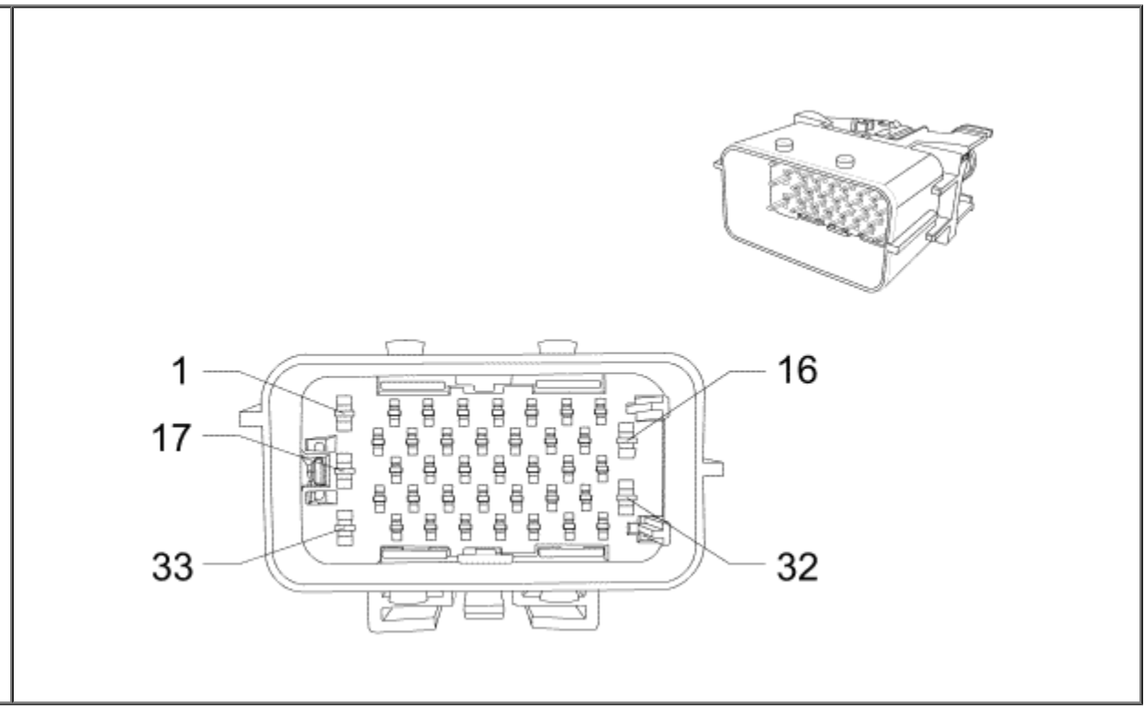

Connector Part Information

Harness Type: Body
OEM Connector: 13603206
Service Connector: 13576553
Description: 40-Way M 1.5/2.8 Series, Sealed (GY)

Terminal Part Information

Pins: 2-7, 27 and 34-38
Terminated Lead: 13578882
Release Tool: J-38125-560
Diagnostic Test Probe: J-35616-3 (GY)

Pins: 11
Terminated Lead: 13327181
Release Tool: J-38125-560
Diagnostic Test Probe: J-35616-14 (GN)

Pins: 16, 32
Terminated Lead: 13327154
Release Tool: J-38125-36
Diagnostic Test Probe: J-35616-35 (VT)

Pins: 8-15, 18-21, 23-26, 28-31, 39, 40
Terminated Lead: 13575380
Release Tool: J-38125-560
Diagnostic Test Probe: J-35616-3 (GY)

Pins: 16, 32
Terminated Lead: Pending
Release Tool: J-38125-36
Diagnostic Test Probe: J-35616-5 (PU)

X190 Engine Harness to Body Harness

Pin	Size	Colour	Circuit	Option	Function	Pin	Size	Colour	Circuit	Option
1	--	--	--	--	Not Used	1	--	--	--	--
2	0.5	WH/RD	1164	-	5 Volt Reference	2	0.35	WH/RD	1164	--
3	0.5	YE/WH	1161	-	Accelerator Pedal Position Signal (1)	3	0.35	YE/WH	1161	-
4	0.5	BK/L-BU	1271	-	Low Reference	4	0.35	BK/L-BU	1271	--
5	0.5	BN/RD	1274	-	5 Volt Reference	5	0.35	BN/RD	1274	--
6	0.5	L-GN/WH	1162	-	Accelerator Pedal Position Signal (2)	6	0.35	L-GN/WH	1162	--
7	0.5	BK/VT	1272	-	Low Reference	7	0.35	BK/VT	1272	--
8	0.5	L-GN	3726	-	Evaporative Emission Vent Solenoid Valve Earth	8	0.5	L-GN	3726	--
9	0.5	GY	3723	-	Evaporative Emission System Leak Detection Pump Assembly Change-over Valve Earth	9	0.5	GY	3723	--
10	0.5	L-BU	3722	-	Evaporative Emission System Leak Detection Pump Assembly Vacuum Pump Earth	10	0.5	L-BU	3722	-
11	0.75	RD/L-BU	3940	--	Battery Positive Voltage	11	0.75	RD/L-BU	3940	-
12	0.5	L-BU/L-GN	3725	-	Evaporative Emission System Leak Detection Pump Assembly Pressure Sensor Signal	12	0.5	L-BU/L-GN	3725	-
13	0.5	BN/RD	3724	-	Evaporative Emission System Leak Detection Pump Assembly Pressure Sensor Voltage Reference	13	0.5	BN/RD	3724	-
14	0.5	VT	5087	-	High-Voltage Interlock Loop Signal (1)	14	0.5	VT	5087	--
15	0.5	VT	5087	-	High-Voltage Interlock Loop Signal (1)	15	0.5	VT	5087	-
16	0.5	GY/L-BU	3336	-	High-Voltage Battery Pack Traction Power Inverter Module Contactor Status	16	0.5	GY/L-BU	3336	-
17	--	--	--	--	Not Used	17	--	--	--	--
18	0.5	L-BU/VT	1589	-	Primary Fuel Level Sensor Signal	18	0.5	L-BU/VT	1589	--
19	0.5	L-BU/WH	890	-	Fuel Tank Pressure Sensor Signal	19	0.5	L-BU/WH	890	--
20	0.5	YE/RD	2709	-	5 Volt Reference	20	0.5	YE/RD	2709	-
21	0.5	BK/L-GN	6281	-	Low Reference	21	0.5	BK/L-GN	6281	-
22	0.5	BN/WH	419	-	Check Engine Indicator Control	22	0.35	BN/WH	419	-

23	0.5	L-BU/YE	6105	-	High Speed GMLAN Serial Data (+) (2)	23	0.5	L-BU/YE	6105	--
24	0.5	WH	6106	-	High Speed GMLAN Serial Data (-) (2)	24	0.5	WH	6106	-
25	0.5	L-BU/BK	7493	-	High Speed GMLAN Serial Data (+)(3)	25	0.5	L-BU/BK	7493	-
26	0.5	WH	7494	-	High Speed GMLAN Serial Data (-)(3)	26	0.5	WH	7494	-
27	--	--	--	--	Not Used	27	--	--	--	--
28	0.5	L-BU/WH	3977	-	Accessory Wake-up Serial Data 2	28	0.5	L-BU/WH	3977	-
29	0.5	WH/L-BU	5986	-	Serial Data Communication Enable	29	0.5	WH/L-BU	5986	-
30	0.5	WH	1579	-	Fuel Temperature/Composition Signal	30	0.5	WH	1579	--
31	0.5	L-BU/VT	2364	-	Cooling Fan Speed Signal	31	0.5	L-BU/VT	2364	--
32	0.5	VT/L-BU	5293	-	Powertrain Main Relay Fused Supply (4)	32	0.5	VT/L-BU	5293	-
33	--	--	--	--	Not Used	33	--	--	--	--
34	0.5	L-BU/RD	474	-	5 Volt Reference	34	0.35	L-BU/RD	474	-
35	0.5	L-BU	204	-	A/C Low-Pressure Sensor Signal	35	0.35	L-BU	204	--
36	0.5	BK/L-GN	476	-	Low Reference	36	0.35	BK/L-GN	476	-
37	0.5	WH/L-BU	732	-	A/C Refrigerant High Temperature Sensor Signal	37	0.35	WH/L-BU	732	--
38	0.5	BK/VT	452	-	Low Reference	38	0.35	BK/VT	452	--
39	0.5	L-BU	2500	-	High Speed GMLAN Serial Data (+) (1)	39	0.5	L-BU	2500	-
40	0.5	WH	2501	-	High Speed GMLAN Serial Data (-) (1)	40	0.5	WH	2501	-

© Copyright Chevrolet. All rights reserved

X225 Instrument Panel Harness to Body Harness

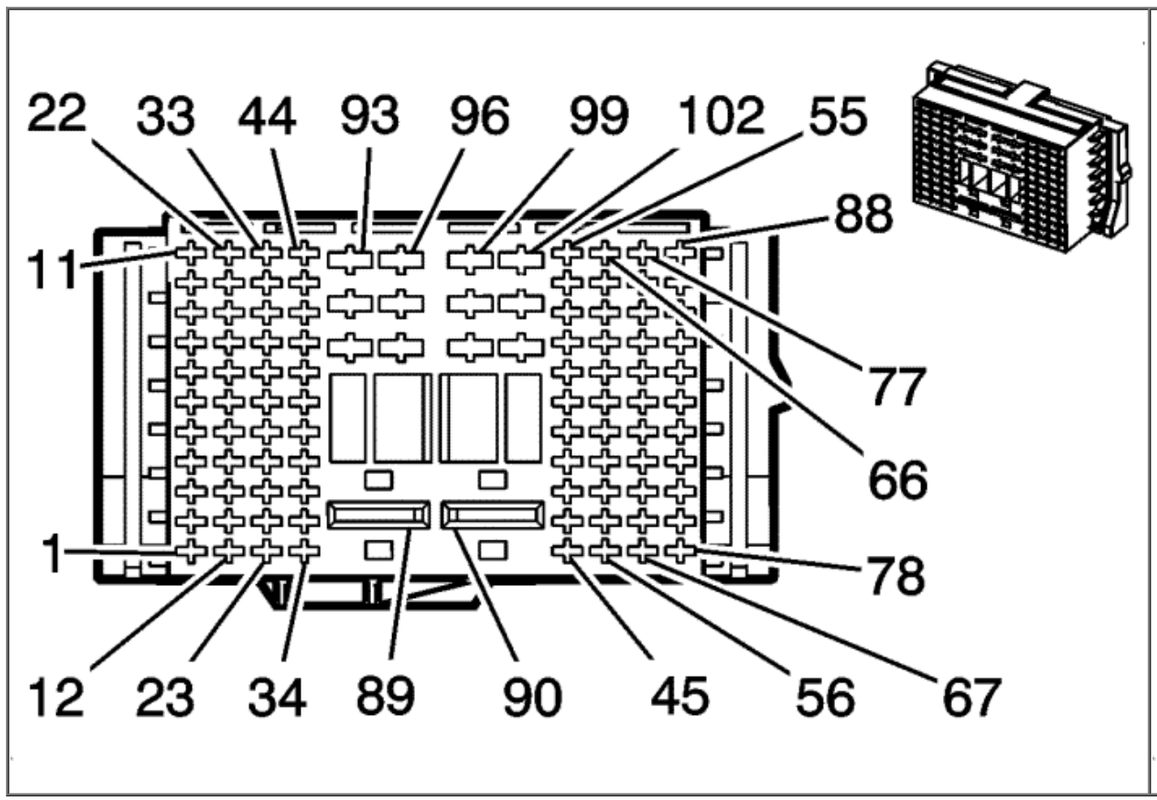

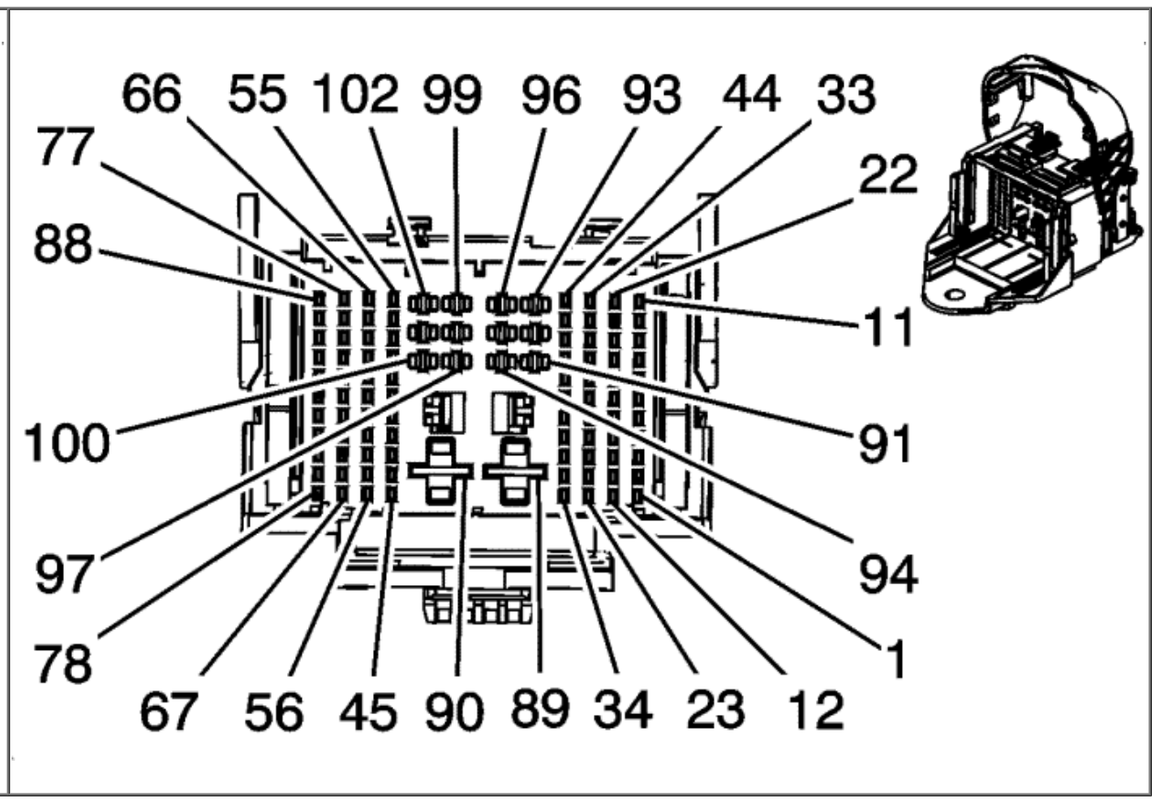

Connector Part Information

Harness Type: Instrument Panel
OEM Connector: 1355713-1
Service Connector: 13574784
Description: 102-Way F 1.5, 2.5, 9.5 Series (BK)

Terminal Part Information

Pins: 1-7, 10-14, 16-18, 20, 25-27, 30-43, 46, 47, 49-55, 58, 61, 64, 65
Terminated Lead: Pins 21, 22, 30, 31, 33, 36, 54 - 13575589
Terminated Lead: Pins 1-7, 10-14, 16-18, 20, 25-27, 32, 34, 35, 37-43, 46, 47, 49-53, 55, 58, 61, 64, 65 - 13575760

Connector Part Information

Harness Type: Body
OEM Connector: 1670174-1
Service Connector: 13577551
Description: 102-Way M 1.6/2.8/8.0 Timer Series (BK)

Terminal Part Information

Pins: 1-7, 10-14, 16-18, 20-22, 25-27, 30-43, 46, 47, 49-55, 58, 61, 64, 65
Terminated Lead: Pins 14, 16-18, 21, 22, 27, 30, 31, 33, 35, 36, 46, 49, 52-54, 58,

Release Tool: J-38125-560
Diagnostic Test Probe: J-35616-14 (GN)

Pins: 89, 94, 95
Terminated Lead: 13575860
Release Tool: J-38125-36
Diagnostic Test Probe: J-35616-35 (VT)

Pins: 91
Terminated Lead: 13575860
Release Tool: J-38125-36
Diagnostic Test Probe: J-35616-35 (VT)

Pins: 100, 101
Terminated Lead: 13575860
Release Tool: J-38125-36
Diagnostic Test Probe: J-35616-35 (VT)

64, 65 - 13575593
Terminated Lead: Pins 1-7, 10-13, 20, 25, 26, 32, 34, 37-43, 47, 50, 51, 55, 61 - 13575591
Release Tool: J-38125-560
Diagnostic Test Probe: J-35616-14 (GN)

Pins: 89, 91, 94, 95
Terminated Lead: 13575574
Release Tool: J-38125-221
Diagnostic Test Probe: J-35616-21 (RD)

Pins: 100, 101
Terminated Lead: 13575593
Release Tool: J-38125-36
Diagnostic Test Probe: J-35616-5 (PU)

X225 Instrument Panel Harness to Body Harness

Pin	Size	Colour	Circuit	Option	Function	Pin	Size	Colour	Circuit	Option
1	0.35	WH/RD	1164	-	5 Volt Reference	1	0.35	WH/RD	1164	--
2	0.35	YE/WH	1161	-	Accelerator Pedal Position Signal (1)	2	0.35	YE/WH	1161	--
3	0.35	BK/L-BU	1271	-	Low Reference	3	0.35	BK/L-BU	1271	-
4	0.35	BN/RD	1274	-	5 Volt Reference	4	0.35	BN/RD	1274	-
5	0.35	L-GN/WH	1162	-	Accelerator Pedal Position Signal (2)	5	0.35	L-GN/WH	1162	--
6	0.35	BK/VT	1272	-	Low Reference	6	0.35	BK/VT	1272	--
7	0.35	BN/WH	419	-	Check Engine Indicator Control	7	0.35	BN/WH	419	-
8-9	--	--	--	--	Not Used	8-9	--	--	--	--
10	0.35	VT/BN	3333	-	Brake Pedal Travel Sensor 2 Signal	10	0.35	VT/BN	3333	--
11	0.35	L-BU/RD	3335	-	Brake Pedal Travel Sensor 1 High Reference	11	0.35	L-BU/RD	3335	-
12	0.35	BK/GY	718	-	Low Reference	12	0.35	BK/GY	718	--
13	0.35	L-BU/YE	3334	-	Brake Pedal Travel Sensor 1 Signal	13	0.35	L-BU/YE	3334	-
14	0.5	L-BU/WH	1314	-	Left Front Indicator Lamp Supply Voltage	14	0.5	L-BU/WH	1314	--
15	--	--	--	--	Not Used	15	--	--	--	--
16	0.5	L-BU/YE	6105	-	High Speed GMLAN Serial Data (+) (2)	16	0.5	L-BU/YE	6105	--
17	0.5	WH	6106	-	High Speed GMLAN Serial Data (-) (2)	17	0.5	WH	6106	-
18	0.5	L-GN/GY	737	-	Boot Lamp Control	18	0.5	L-GN/GY	737	-
19	--	--	--	--	Not Used	19	--	--	--	--
20	0.35	L-GN/BN	2087	-	Combined Vehicle Inertial Sensor Supply Voltage	20	0.35	L-GN/BN	2087	-
21-24	--	--	--	--	Not Used	21-24	--	--	--	--

25	0.35	GY/BK	817	-	Vehicle Speed Signal	25	0.35	GY/BK	817	-
26	0.35	BN/WH	28	--	Horn Relay Control	26	0.35	BN/WH	28	-
27	0.5	BN/YE	820	-	CHMSL Supply Voltage	27	0.5	BN/YE	820	-
28-29	--	--	--	--	Not Used	28-29	--	--	--	--
30	0.75	BN/YE	294	-	Door Lock Actuator Unlock Control	30	0.75	BN/YE	294	-
31	0.75	GY	5911	-	Door Lock Actuator Lock Control 2	31	0.75	GY	5911	-
32	0.35	VT/YE	3267	-	Child Security Lock Relay Control	32	0.35	VT/YE	3267	-
33	1	GY/L-GN	3271	-	Door Lock Control (2)	33	1	GY/L-GN	3271	--
34	0.35	BN/WH	3269	-	Child Security Lock Motor Status Signal Left Rear	34	0.35	BN/WH	3269	-
35	0.5	BN/GY	2268	-	Windscreen Washer Relay Control	35	0.5	BN/GY	2268	--
36	0.75	VT/GY	2339	-	Run/Crank Ignition 1 Voltage	36	0.75	VT/GY	2339	-
37	0.35	L-BU/VT	1134	-	Park Brake Switch Signal	37	0.35	L-BU/VT	1134	--
38	0.35	BN/WH	7684	-	Park Brake Apply Switch Voltage Reference	38	0.35	BN/WH	7684	--
39	0.35	BN	6107	-	Park Brake Apply Switch Signal	39	0.35	BN	6107	-
40	0.35	L-BU/BK	6108	-	Park Brake Release Switch Signal	40	0.35	L-BU/BK	6108	-
41	0.35	GY/BK	7683	-	Park Brake Release Switch Voltage Reference	41	0.35	GY/BK	7683	-
42	0.35	YE	1492	-	Park Brake Switch Supply Voltage	42	0.35	YE	1492	--
43	0.35	L-GN/BN	6132	-	Linear Interconnect Network Bus 1	43	0.35	L-GN/BN	6132	-
44-45	--	--	--	--	Not Used	44-45	--	--	--	--
46	0.5	GY	91	-	Windscreen Wiper Motor Relay Coil Supply Voltage	46	0.5	GY	91	-
47	0.35	YE/L-BU	5797	-	Rear Closure Handle Switch Open Signal	47	0.35	YE/L-BU	5797	--
48	--	--	--	--	Not Used	48	--	--	--	--
49	0.5	YE	6817	-	LED Backlight Dimming Control	49	0.5	YE	6817	--
50	0.35	L-BU/GY	809	-	Left Tail Lamp Supply Voltage	50	0.35	L-BU/GY	809	--
51	0.35	BN/VT	1969	-	Headlamp Main Beam Relay Control	51	0.35	BN/VT	1969	-
52	0.5	L-BU/BK	7493	-	High Speed GMLAN Serial Data (+)(3)	52	0.5	L-BU/BK	7493	-
53	0.5	WH	7494	-	High Speed GMLAN Serial Data (-)(3)	53	0.5	WH	7494	--
54	0.75	YE/BN	618	-	Left Rear Indicator Lamp Supply Voltage	54	0.5	YE/BN	618	--
55	0.35	WH/VT	6567	-	Rear Direction Indicator Lamp Feedback Signal	55	0.35	WH/VT	6567	-
56-57	--	--	--	--	Not Used	56-57	--	--	--	--
58	0.35	L-GN/VT	5199	-	Run/Crank Relay Coil Control	58	0.5	L-GN/VT	5199	-
59-60	--	--	--	--	Not Used	59-60	--	--	--	--
61	0.5	VT/GY	1303	-	Tail Gate Ajar Switch Signal (1)	61	0.35	VT/GY	1303	-
62-63	--	--	--	--	Not Used	62-63	--	--	--	--
64	0.5	WH	2501	-	High Speed GMLAN Serial Data (-) (1)	64	0.5	WH	2501	-
65	0.5	L-BU	2500	-	High Speed GMLAN Serial Data (+) (1)	65	0.5	L-BU	2500	--
66-88	--	--	--	--	Not Used	66-88	--	--	--	--
89	6	RD/L-BU	42	--	Battery Positive Voltage	89	6	RD/L-BU	42	-

90	--	--	--	--	Not Used	90	--	--	--	--
91	0.5	WH/L-BU	5986	-	Serial Data Communication Enable	91	0.5	WH/L-BU	5986	-
92-93	--	--	--	--	Not Used	92-93	--	--	--	--
94	0.5	BN/VT	193	-	Rear Demist Relay Control	94	0.5	BN/VT	193	-
95	0.5	L-GN/YE	6134	-	Linear Interconnect Network Bus 3	95	0.5	L-GN/YE	6134	-
96-99	--	--	--	--	Not Used	96-99	--	--	--	--
100	2.5	L-BU	201	-	Left Front Speaker (+) (1)	100	1.5	L-BU	201	-
101	2.5	BN/L-BU	118	-	Left Front Speaker Signal (-) (1)	101	1.5	BN/L-BU	118	-
102	0.5	VT/L-GN	39	-	Run/Crank Ignition 1 Voltage	102	0.35	VT/L-GN	39	-
	0.5	VT/L-GN	39	-	Run/Crank Ignition 1 Voltage					

© Copyright Chevrolet. All rights reserved

X250 Instrument Panel Top Pad Harness to Instrument Panel Harness

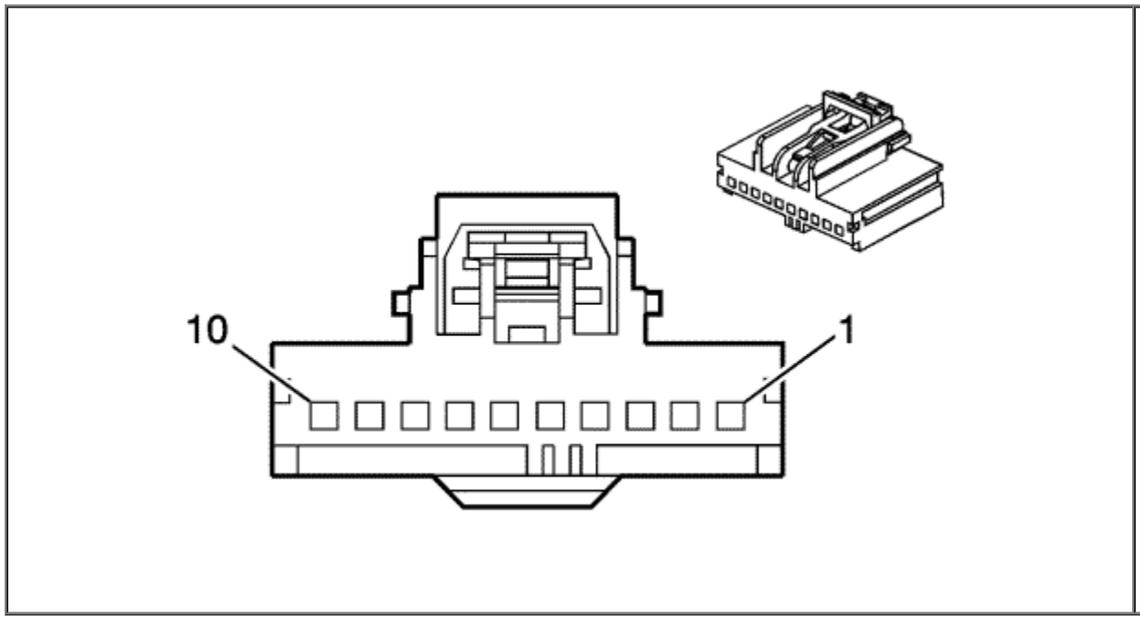

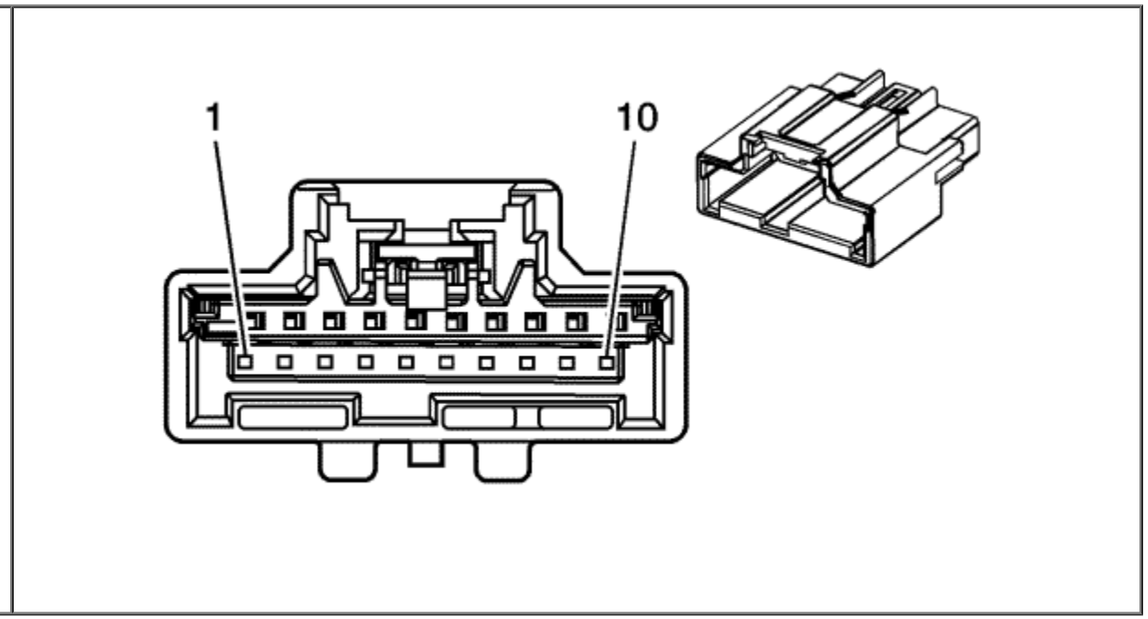

Connector Part Information

Harness Type: Instrument Panel Top Pad
OEM Connector: 89047355
Service Connector: 89047355
Description: 10-Way F (BK)

Terminal Part Information

Terminated Lead: 13575845
Release Tool: J-38125-215A
Diagnostic Test Probe: J-35616-64B (L-BU)

Connector Part Information

Harness Type: Instrument Panel
OEM Connector: 7282-9082-30
Service Connector: 89047356
Description: 10-Way M Kaizen YESC Series (BK)

Terminal Part Information

Terminated Lead: 13575827
Release Tool: J-38125-215A
Diagnostic Test Probe: J-35616-65B (L-BU)

X250 Instrument Panel Top Pad Harness to Instrument Panel Harness

Pin	Size	Colour	Circuit	Option	Function	Pin	Size	Colour	Circuit	Option
1-2	--	--	--	--	Not Used	1-2	--	--	--	--
3	0.5	L-BU/WH	734	-	Inside Air Temperature Sensor Signal	3	0.5	L-BU/WH	734	-
4	0.5	YE/VT	1783	-	Twilight Sentinel Delay Signal	4	0.5	YE/VT	1783	--
5	0.5	WH/L-BU	278	-	Ambient Light Sensor Signal	5	0.5	WH/L-BU	278	--
6	0.5	BK/BN	6102	-	Low Reference	6	0.5	BK/BN	6102	--
7	0.35	GY/L-GN	3957	-	Charging Pilot Signal Indicator Control	7	0.35	GY/L-GN	3957	--
8	0.35	YE/VT	3956	-	Charging Status Indicator Control	8	0.35	YE/VT	3956	-
9	0.35	BK/L-GN	3958	-	Low Reference	9	0.35	BK/L-GN	3958	--
10	0.35	WH/BN	3955	-	Charging Complete Indicator Control	10	0.35	WH/BN	3955	-

© Copyright Chevrolet. All rights reserved

X252 Instrument Panel Harness to HVAC Harness

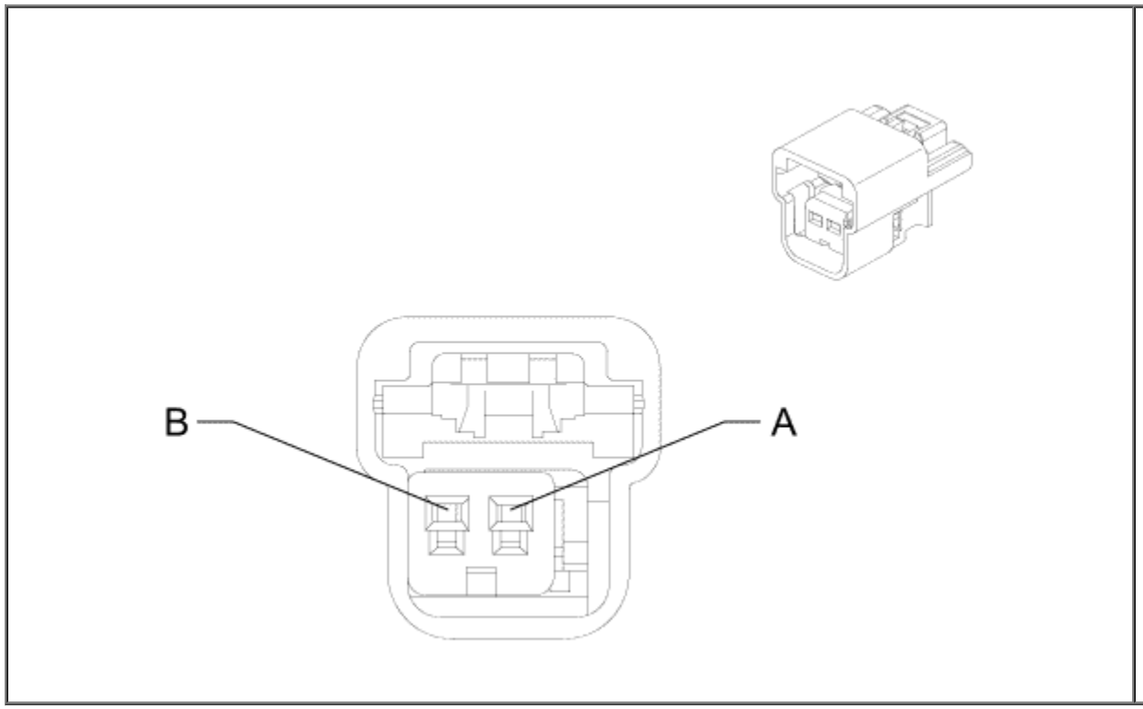

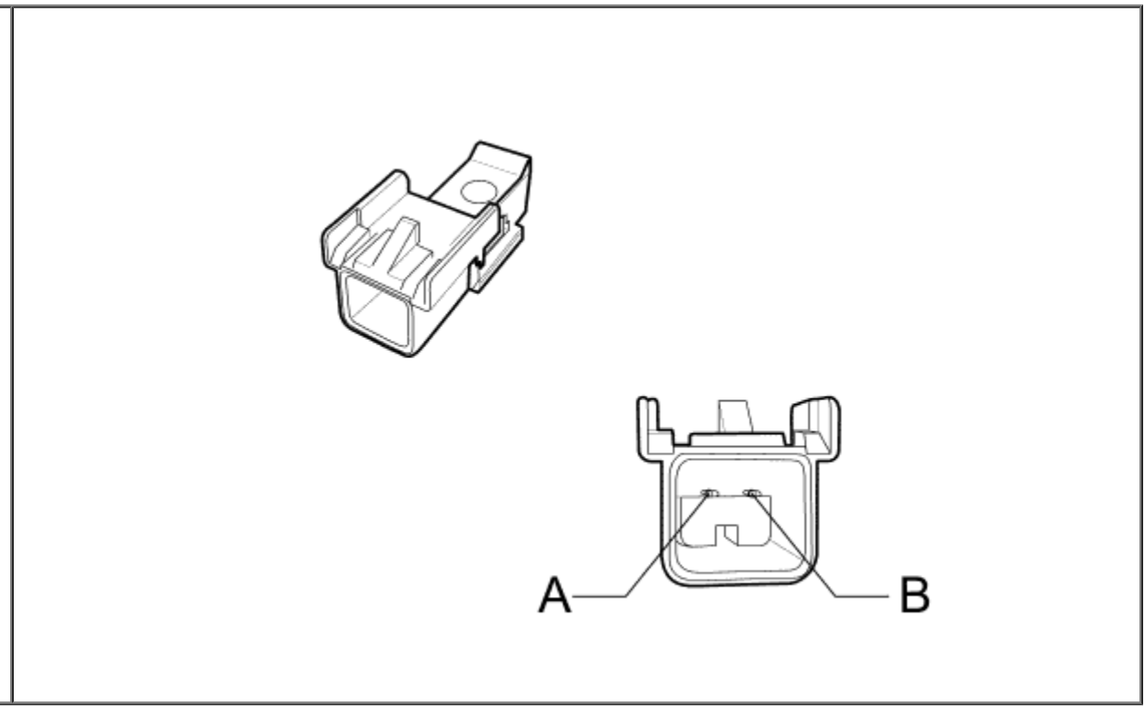

Connector Part Information

Harness Type: Instrument Panel
OEM Connector: 15332129
Service Connector: 15306425
Description: 2-Way F GT 150 Series (BK)

Terminal Part Information

Terminated Lead: Service by Connector Assembly - 15306425
Release Tool: J-38125-553
Diagnostic Test Probe: J-35616-2A (GY)

Connector Part Information

Harness Type: HVAC
OEM Connector: 15332130
Service Connector: 88986459
Description: 2-Way M GT 150 Series (BK)

Terminal Part Information

Terminated Lead: Service by Harness - See Part Catalog
Release Tool: Service by Harness - See Part Catalog
Diagnostic Test Probe: Service by Harness - See Part Catalog

X252 Instrument Panel Harness to HVAC Harness

Pin	Size	Colour	Circuit	Option	Function	Pin	Size	Colour	Circuit	Option
A	--	--	--	--	Not Used	A	--	--	--	--
B	0.75	BN	518	-	Lower Left Air Temperature Sensor Signal	B	0.75	D-BU	518	-

© Copyright Chevrolet. All rights reserved

X255 Instrument Panel Harness to Passenger Air Bag Harness

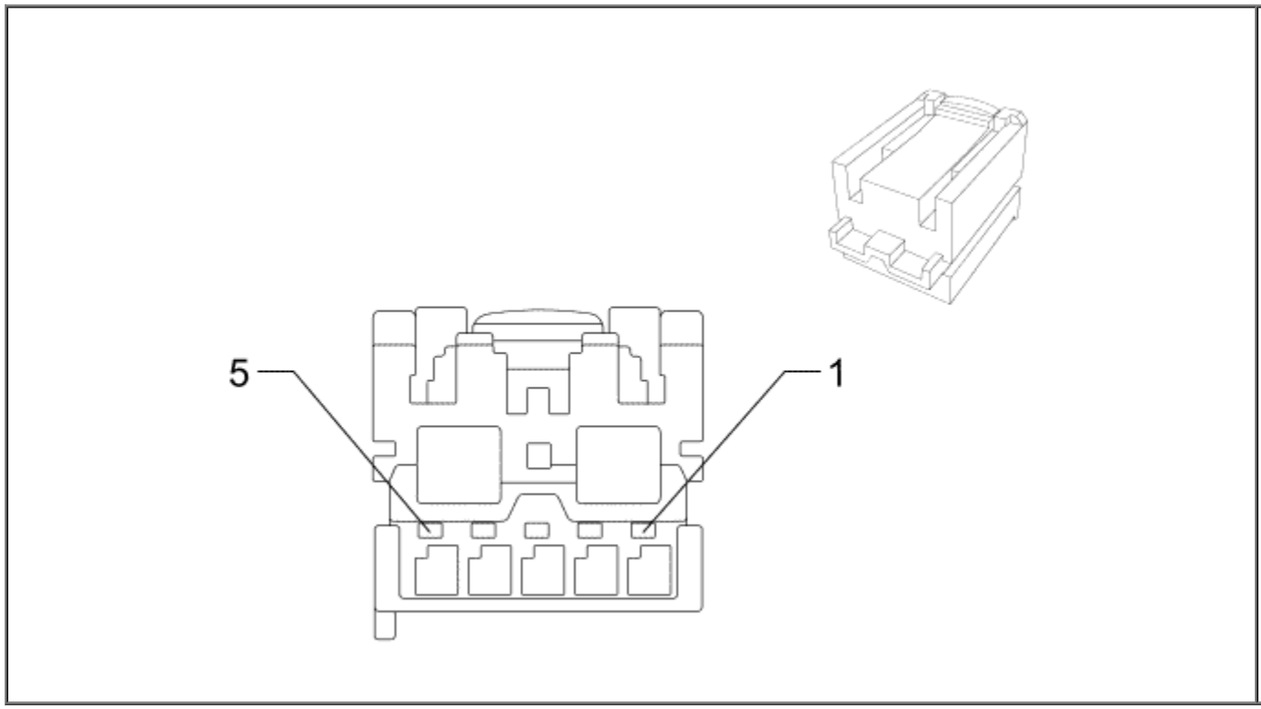

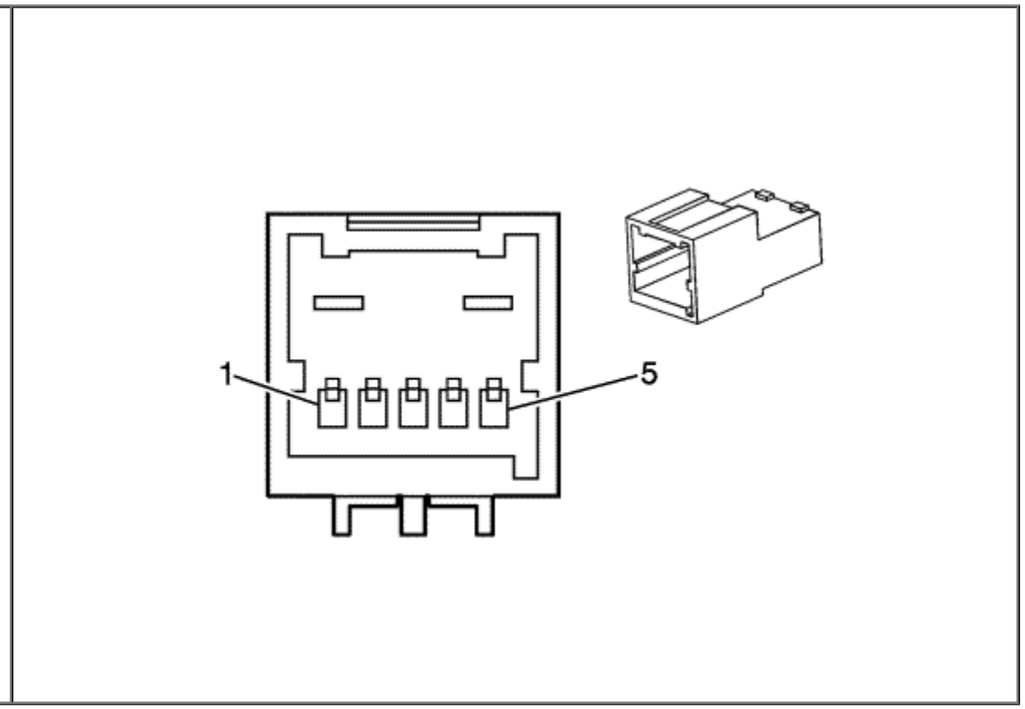

Connector Part Information

Harness Type: Instrument Panel
OEM Connector: SNAPB-05UN-1FYS
Service Connector: 19178096
Description: 5-Way F 0.64 Series Unsealed (YE)

Terminal Part Information

Terminated Lead: Service by Connector Assembly - 19178096
Release Tool: Pending
Diagnostic Test Probe: J-35616-64B (L-BU)

Connector Part Information

Harness Type: Passenger Air Bag Jumper
OEM Connector: 19153435
Service Connector: Service by Harness - See Part Catalog
Description: 5-Way M 0.64 Series (YE)

Terminal Part Information

Terminated Lead: Service by Harness - See Part Catalog
Release Tool: Service by Harness - See Part Catalog
Diagnostic Test Probe: Service by Harness - See Part Catalog

X255 Instrument Panel Harness to Passenger Air Bag Harness

Pin	Size	Colour	Circuit	Option	Function	Pin	Size	Colour	Circuit	Option
1	0.75	YE/OG	3025	-	Passenger IP Module Stage 1 High Control	1	0.75	YE	3025	--
2	0.75	OG/WH	3024	-	Passenger IP Module Stage 1 Low Control	2	0.75	OG	3024	--
3	--	--	--	--	Not Used	3	--	--	--	--
4	0.75	VT	3027	-	Passenger IP Module Stage 2 High Control	4	0.75	GY	3027	--
5	0.75	OG/VT	3026	-	Passenger IP Module Stage 2 Low Control	5	0.75	VT	3026	-

© Copyright Chevrolet. All rights reserved

X275 Instrument Panel Harness to Body Harness

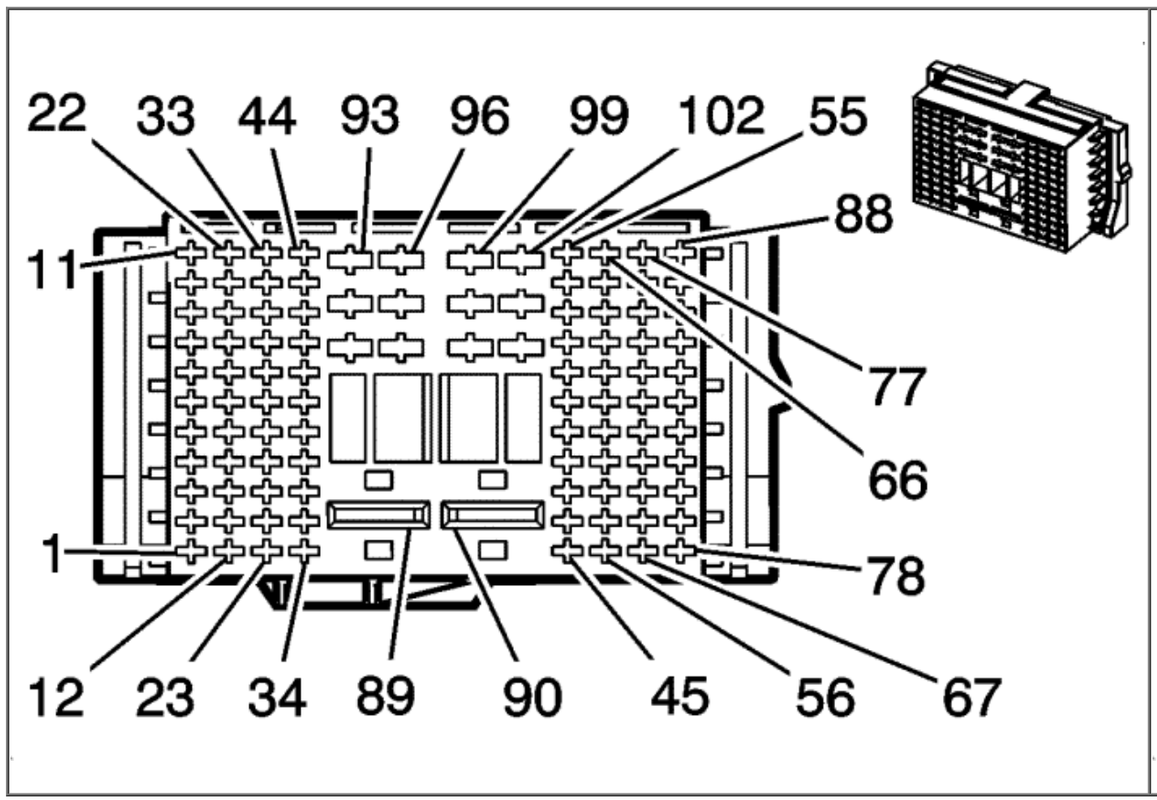

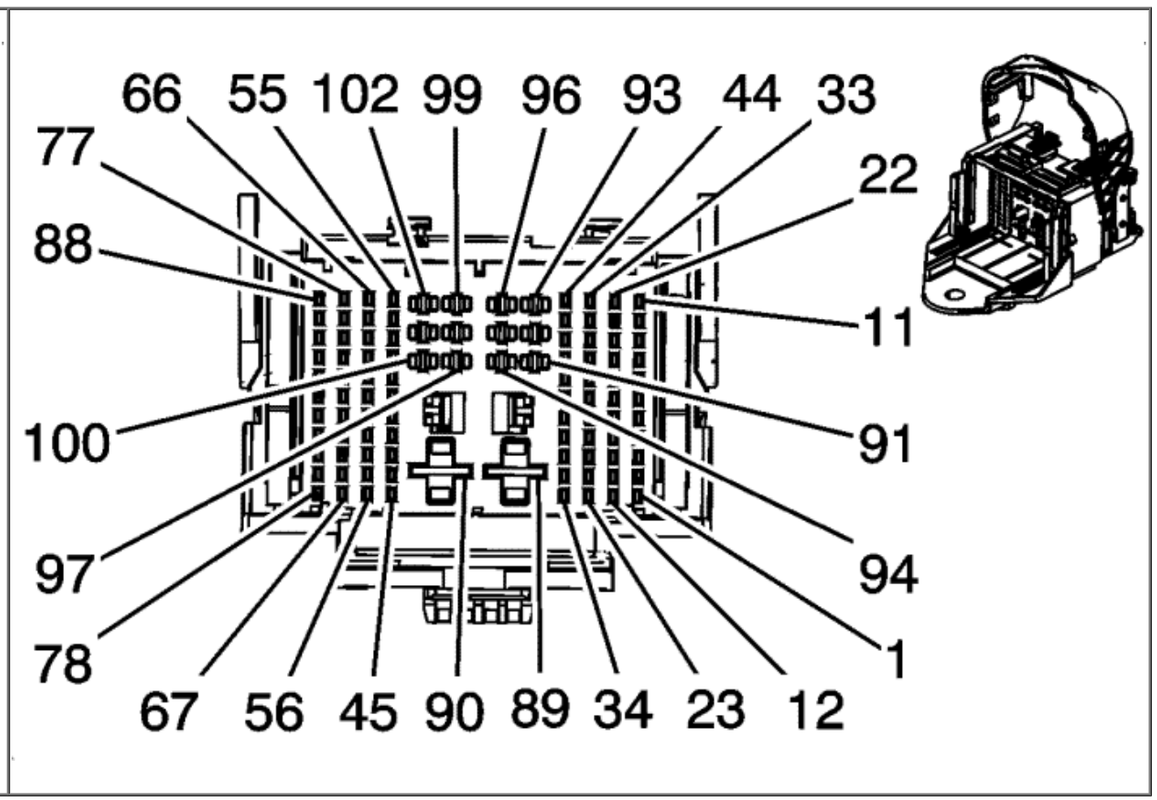

Connector Part Information

Harness Type: Instrument Panel
OEM Connector: 1355713-1
Service Connector: 13574784
Description: 102-Way F 1.5, 2.5, 9.5 Series (BK)

Terminal Part Information

Pins: 1-9, 12-35, 37-42, 44-73, 75-78
Terminated Lead: Pins 8, 9, 24-27, 37, 54, 59, 60, 62, 63, 72, 73 - 13575589
Terminated Lead: Pins 1-7, 12-23, 28-35, 38-42, 44-53, 55-58, 61, 64-71, 75-78 - 13575760

Connector Part Information

Harness Type: Body
OEM Connector: 1670174-1
Service Connector: 13577551
Description: 102-Way M 1.6/2.8/8.0 Timer Series (BK)

Terminal Part Information

Pins: 1-9, 12-35, 37-42, 44-73, 75-78
Terminated Lead: Pins 1, 4, 5, 7-9, 16, 21, 22, 24-31, 37, 38, 45-50, 54, 56-63, 67-73, 75-78 -

Release Tool: J-38125-560
Diagnostic Test Probe: J-35616-14 (GN)

Pins: 90, 93, 95, 97, 98
Terminated Lead: 13575860
Release Tool: J-38125-36
Diagnostic Test Probe: J-35616-35 (VT)

Pins: 91, 92, 96
Terminated Lead: 13575860
Release Tool: J-38125-36
Diagnostic Test Probe: J-35616-35 (VT)

Pins: 99-101
Terminated Lead: 13575860
Release Tool: J-38125-36
Diagnostic Test Probe: J-35616-35 (VT)

13575593
Terminated Lead: Pins 2, 3, 6, 12-15, 17-20, 23, 32-35, 39-42, 44, 51-53, 55, 64-66 - 13575591
Release Tool: J-38125-560
Diagnostic Test Probe: J-35616-14 (GN)

Pins: 90, 92, 93, 95
Terminated Lead: 13575574
Release Tool: J-38125-221
Diagnostic Test Probe: J-35616-21 (RD)

Pins: 91, 99-101
Terminated Lead: Pins 91, 100, 101 - 13575574
Terminated Lead: Pins 99 - Pending
Release Tool: J-38125-36
Diagnostic Test Probe: J-35616-5 (PU)

X275 Instrument Panel Harness to Body Harness

Pin	Size	Colour	Circuit	Option	Function	Pin	Size	Colour	Circuit	Option
1	0.5	VT	185	-	Low Washer Fluid Indicator Control	1	0.5	VT	185	--
2	0.35	L-GN/BN	5852	-	Rear Park Assist LED Disable Signal	2	0.35	L-GN/BN	5852	--
3	0.35	GY/L-GN	2555	-	Rear Park Assist Disable Signal	3	0.35	GY/L-GN	2555	-
4	0.5	L-BU/YE	6105	-	High Speed GMLAN Serial Data (+) (2)	4	0.5	L-BU/YE	6105	--
5	0.5	WH	6106	-	High Speed GMLAN Serial Data (-) (2)	5	0.5	WH	6106	-
6	0.35	WH/L-BU	6311	-	Cruise/ETC/TCC Brake Signal	6	0.35	WH/L-BU	6311	--
7	0.35	L-GN/BN	5706	-	Endgate Latch Relay Supply Voltage	7	0.5	L-GN/BN	5706	-
8-11	--	--	--	--	Not Used	8-11	--	--	--	--
12	0.35	L-BU	511	-	Left Front Low Level Audio Signal	12	0.35	L-BU	511	--
13	0.35	BN/L-BU	1947	-	Left Front Low Level Audio (-)	13	0.35	BN/L-BU	1947	-
14	0.35	YE	512	-	Right Front Low Level Audio Signal	14	0.35	YE	512	-
15	0.35	L-BU/BN	1546	-	Front Low Level Audio (-)	15	0.35	L-BU/BN	1546	-
16	0.5	BK	2011	-	Left Front Audio Drain Wire	16	0.5	BK	2011	-
17	0.35	L-GN/BK	599	-	Left Rear Low Level Audio Signal	17	0.35	L-GN/BK	599	--
18	0.35	BN/VT	1999	-	Left Rear Low Level Audio (-)	18	0.35	BN/VT	1999	--
19	0.35	BN/WH	546	-	Right Rear Low Level Audio Signal	19	0.35	BN/WH	546	-
20	0.35	L-BU/BK	1946	-	Right Rear Low Level Audio (-)	20	0.35	L-BU/BK	1946	--
21	0.5	BK	2099	-	Left Rear Audio Drain Wire	21	0.5	BK	2099	-
22	0.5	VT/L-BU	6978	-	Amplifier Control	22	0.5	VT/L-BU	6978	--
23	0.35	VT/BK	3	--	Run/Crank Ignition 1 Voltage	23	0.35	VT/BK	3	--

24-27	--	--	--	--	Not Used	24-27	--	--	--	--
28	0.35	L-GN	36	--	Coolant Temperature Signal	28	0.5	L-GN	36	-
29	0.5	BK/BN	6102	-	Low Reference	29	0.5	BK/BN	6102	-
30	0.5	BN/WH	3552	-	Passive Start Interior Aerial 1 Signal Hi	30	0.5	BN/WH	3552	--
31	0.5	WH	3553	-	Passive Start Interior Aerial 1 Signal Lo	31	0.5	WH	3553	-
32	0.35	GY/L-BU	7538	-	Left Front DRL Supply Voltage	32	0.35	GY/L-BU	7538	-
33	0.35	L-BU/BN	7539	-	Right Front DRL Supply Voltage	33	0.35	GY/L-BU	7539	--
34	0.35	L-GN/BK	3558	-	Passive Start Switch Signal 2	34	0.35	L-GN/BK	3558	-
35	0.35	BK/GY	3559	-	Low Reference	35	0.35	BK/GY	3559	--
36	--	--	--	--	Not Used	36	--	--	--	--
37	0.75	L-GN/WH	1324	--	Reverse Lamp Supply Voltage	37	0.5	L-GN/WH	1324	--
38	0.5	L-GN/YE	6846	-	Rear Number Plate Lamp Supply Voltage	38	0.5	L-GN/YE	6846	--
39	0.35	GY/BK	3268	-	Child Security Lock Motor Status Signal Right Rear	39	0.35	GY/BK	3268	-
40	0.35	YE/VT	3956	-	Charging Status Indicator Control	40	0.35	YE/VT	3956	-
41	0.35	BK/L-GN	3958	-	Low Reference	41	0.35	BK/L-GN	3958	-
42	0.35	GY/L-GN	3957	-	Charging Pilot Signal Indicator Control	42	0.35	GY/L-GN	3957	-
43	--	--	--	--	Not Used	43	--	--	--	--
44	0.35	VT/YE	4	-	Accessory Voltage	44	0.35	VT/YE	4	-
45	0.5	WH/YE	5075	-	Current Sensor Signal	45	0.5	WH/YE	5075	--
46	0.5	L-BU/VT	5076	-	Current Sensor Supply Voltage	46	0.5	L-BU/VT	5076	-
47	0.5	BK/VT	5077	-	Low Reference	47	0.5	BK/VT	5077	-
48	0.5	BK/BN	1798	-	Low Reference	48	0.75	BK/BN	1798	-
49	0.5	RD/BK	2440	--	Battery Positive Voltage	49	0.5	RD/GY	2440	--
50	0.5	RD/GY	2840	-	Battery Positive Voltage	50	0.5	RD/GY	2840	--
51	0.35	L-GN/GY	3853	-	Cabin Heater Coolant Motor Enable	51	0.35	L-GN/GY	3853	-
52	0.35	VT/YE	3854	-	Cabin Heater Coolant Motor Control	52	0.35	VT/YE	3854	-
53	0.35	BN/L-BU	3852	-	Cabin Heater Coolant Motor Feedback Signal	53	0.35	BN/L-BU	3852	--
54	0.75	L-GN/VT	619	-	Right Rear Indicator Lamp Supply Voltage	54	0.5	L-GN/VT	619	--
55	0.35	WH/BK	7544	-	Right Rear Direction Indicator Feedback Signal	55	0.35	WH/BK	7544	-
56	0.5	BK	6974	-	Camera Drain Wire	56	0.5	BK	6974	-
57	0.35	GY/YE	6972	-	Camera Signal #2 +	57	0.5	GY/YE	6972	-
58	0.35	WH/L-BU	6973	-	Camera Signal #2	58	0.5	WH/L-BU	6973	-
59	0.75	YE/GY	1956	-	Left Front Tweeter Speaker (-)	59	0.75	YE/GY	1956	-
60	0.75	YE/L-BU	1856	-	Left Front Tweeter Speaker (+)	60	0.75	YE/L-BU	1856	-
61	0.5	BN/L-GN	109	-	Bonnet Ajar Switch Signal	61	0.5	BN/L-GN	109	-
62	1	YE	712	-	Left Headlamp Low Beam Supply Voltage	62	1	YE	712	-
63	1	YE	312	-	Right Headlamp Low Beam Supply Voltage	63	1	YE	312	-
64	0.35	WH/YE	1204	-	Left Park Lamp Supply Voltage	64	0.35	WH/YE	1204	-

65	0.35	VT	1203	--	Right Park Lamp Supply Voltage	65	0.35	VT	1203	--
66	0.35	WH	609	-	Right Tail Lamp Supply Voltage	66	0.35	WH	609	-
67	0.5	L-BU	2500	-	High Speed GMLAN Serial Data (+) (1)	67	0.5	L-BU	2500	-
68	0.5	WH	2501	-	High Speed GMLAN Serial Data (-) (1)	68	0.5	WH	2501	-
69	0.5	OG	3554	-	Passive Start Interior Aerial 2 Signal Hi	69	0.5	OG	3554	-
70	0.5	OG/L-BU	3555	-	Passive Start Interior Aerial 2 Signal Lo	70	0.5	OG/L-BU	3555	-
71	0.5	L-GN	5060	--	Low Speed GMLAN Serial Data	71	0.5	L-GN	5060	-
72	0.75	VT/BN	1952	-	Right Front Tweeter Speaker (-)	72	0.75	VT/BN	1952	-
73	0.75	BN/L-GN	1852	-	Right Front Tweeter Speaker (+)	73	0.75	BN/L-GN	1852	--
74	--	--	--	--	Not Used	74	--	--	--	--
75	0.5	BK	2050	--	Ground	75	0.5	BK	2050	--
76	0.5	L-BU/BK	7493	-	High Speed GMLAN Serial Data (+)(3)	76	0.5	L-BU/BK	7493	--
77	0.5	WH	7494	-	High Speed GMLAN Serial Data (-)(3)	77	0.5	WH	7494	-
78	0.5	VT/YE	5985	-	Accessory Wakeup Serial Data	78	0.5	VT/YE	5985	-
79-89	--	--	--	--	Not Used	79-89	--	--	--	--
90	8	RD/GY	142	--	Battery Positive Voltage	90	8	RD/GY	142	-
91	1	VT	1701	-	Retained Accessory Power Fuse Supply Voltage	91	1	VT	1701	-
92	0.75	L-GN/VT	1315	-	Right Front Indicator Lamp Supply Voltage	92	0.5	GY/VT	1315	-
93	0.5	L-BU/WH	1314	-	Left Front Indicator Lamp Supply Voltage	93	0.5	L-BU/WH	1314	-
	0.75	L-BU/WH	1314	-	Left Front Indicator Lamp Supply Voltage					
94	--	--	--	--	Not Used	94	--	--	--	--
95	0.5	L-GN/GY	6135	-	Linear Interconnect Network Bus 4	95	0.5	L-GN/GY	6135	-
96	0.5	L-GN/YE	7066	-	Entertainment Remote Enable Signal	96	0.5	L-GN/YE	7066	-
	0.5	L-GN/YE	7066	-	Entertainment Remote Enable Signal					
97	0.5	L-BU/L-GN	6433	-	CAN Bus High Serial Data	97	0.5	L-BU/L-GN	6433	-
98	0.5	WH	6432	-	CAN Bus Low Serial Data	98	0.5	WH	6432	-
99	2.5	BK	1450	--	Ground	99	2.5	BK	1450	-
100	2.5	L-BU	201	-	Left Front Speaker (+) (1)	100	1	L-BU	201	-
101	2.5	BN/L-BU	118	-	Left Front Speaker Signal (-) (1)	101	1	BN/L-BU	118	-
102	--	--	--	--	Not Used	102	--	--	--	-

© Copyright Chevrolet. All rights reserved

X310 Headliner Harness to Instrument Panel Harness

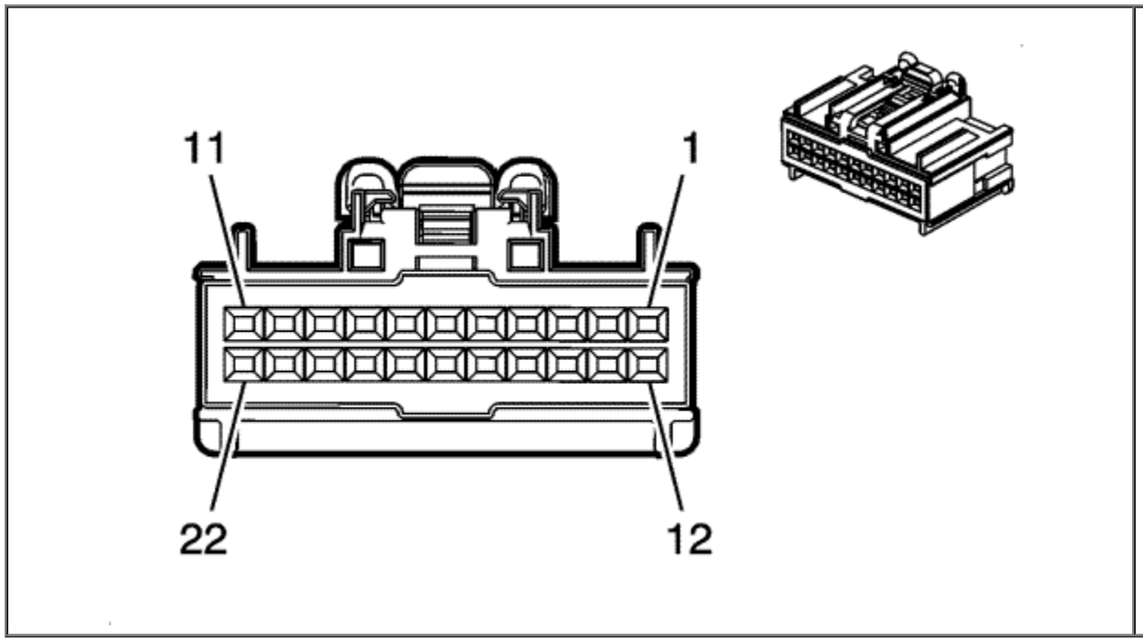

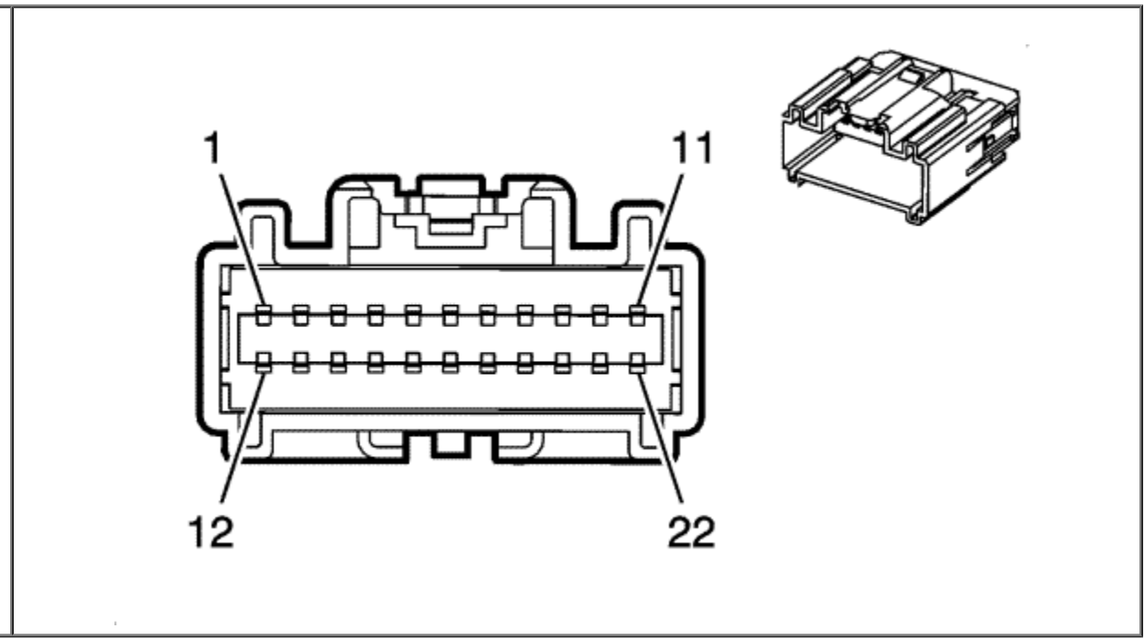

Connector Part Information

Harness Type: Headliner
OEM Connector: 0-1420011-3
Service Connector: 13577513
Description: 22-Way F GET 0.64 Series (NA)

Terminal Part Information

Terminated Lead: Pins 4, 5, 7-13, 21, 22 - 13575571
Terminated Lead: Pins 6, 14-20 - Pending
Release Tool: J-38125-553

Connector Part Information

Harness Type: Instrument Panel
OEM Connector: 2-1419158-6
Service Connector: 13577552
Description: 22-Way M GET 0.64 Series (NA)

Terminal Part Information

Pins: 4, 5
Terminated Lead: Pending
Release Tool: J-38125-553
Diagnostic Test Probe: J-35616-65B (L-BU)

Pins: 6-22

Diagnostic Test Probe: J-35616-64B (L-BU)

Terminated Lead: Pending
Release Tool: J-38125-553
Diagnostic Test Probe: J-35616-65B (L-BU)

X310 Headliner Harness to Instrument Panel Harness

Pin	Size	Colour	Circuit	Option	Function	Pin	Size	Colour	Circuit	Option
1-2	--	--	--	--	Not Used	1-2	--	--	--	--
3	0.5	L-GN/WH	24	--	Reverse Lamp Supply Voltage	3	0.5	L-GN/WH	24	-
4	0.5	GY	157	-	Interior Lamp Control	4	0.75	GY	157	--
5	0.5	WH/BN	6815	-	Inadvertent Power Control	5	0.75	WH/BN	6815	--
6	0.35	RD/YE	740	--	Battery Positive Voltage	6	0.35	RD/YE	740	--
7	0.5	YE/RD	597	-	5 Volt Reference	7	0.5	YE/RD	597	--
8	0.5	YE/L-BU	3197	-	Humidity Temperature Sensor Signal	8	0.5	YE/L-BU	3197	--
9	0.5	BK	1650	--	Ground	9	0.5	BK	1650	--
10	0.5	BK	2150	--	Ground	10	0.5	BK	2150	--
11	0.5	GY/L-BU	7564	-	Humidity Sensor Signal	11	0.5	GY/L-BU	7564	-
12	0.5	GY/L-GN	7565	-	Windscreen Temp Sensor Signal	12	0.5	GY/L-GN	7565	-
13	0.5	BK/BN	6102	-	Low Reference	13	0.5	BK/BN	6102	-
14	0.35	L-BU	2307	-	Passenger Air Bag On Indicator Control	14	0.5	L-BU	2307	-
15	0.35	L-GN	2308	-	Passenger Air Bag Off Indicator Control	15	0.5	L-GN	2308	--
16	0.35	VT/WH	5234	-	Passenger Seat Belt Indicator	16	0.5	VT/WH	5234	-
17	0.35	L-GN/WH	2514	-	Keypad Signal	17	0.35	L-GN/WH	2514	--
18	0.35	L-GN/BK	2515	-	Keypad Supply Voltage	18	0.35	L-GN/BK	2515	--
19	0.35	YE/VT	2516	-	Keypad Green LED	19	0.35	YE/VT	2516	-
20	0.35	BN/WH	2517	-	Keypad Red LED	20	0.35	BN/WH	2517	--
21	0.5	L-BU	655	-	Mobile Telephone Microphone Signal	21	0.35	L-BU	655	-
22	0.5	BK/BN	654	-	Low Reference	22	0.35	BK/BN	654	-

© Copyright Chevrolet. All rights reserved

X311 Headliner Harness to Instrument Panel Harness

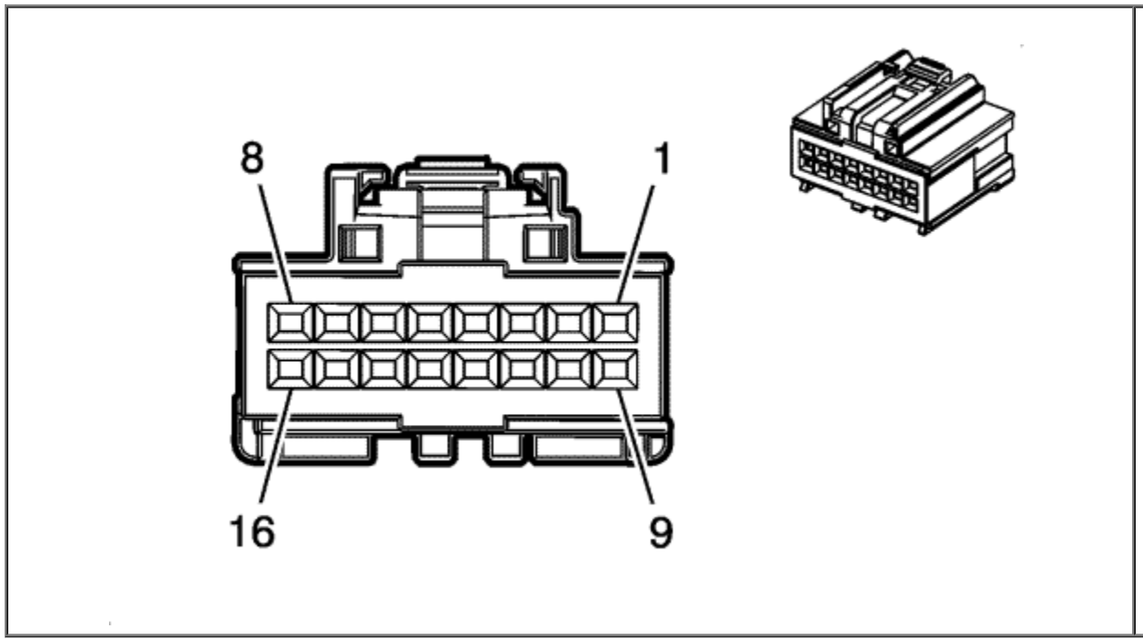

Connector Part Information

Harness Type: Headliner
OEM Connector: 1456989-5
Service Connector: 13577514
Description: 16-Way F (BK)

Terminal Part Information

Terminated Lead: Pins 1-4, 7, 12, 13 - 13575571
Terminated Lead: Pins 5, 6, 8 - Pending
Release Tool: J-38125-553
Diagnostic Test Probe: J-35616-64B (L-BU)

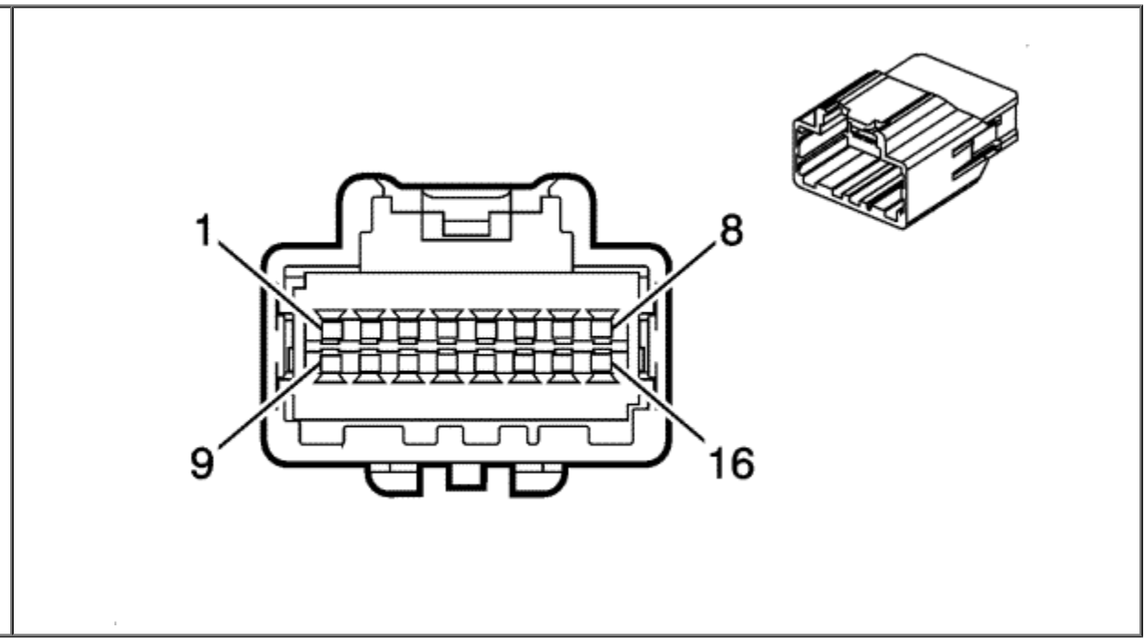

Connector Part Information

Harness Type: Instrument Panel
OEM Connector: 5-1419167-6
Service Connector: 13577515
Description: 16-Way M GET 0.64 Series (BK)

Terminal Part Information

Terminated Lead: Pending
Release Tool: J-38125-553
Diagnostic Test Probe: J-35616-65B (L-BU)

X311 Headliner Harness to Instrument Panel Harness

Pin	Size	Colour	Circuit	Option	Function	Pin	Size	Colour	Circuit	Option
1	0.5	GY/WH	3272	-	Remote Function Actuator Supply Voltage	1	0.5	GY/WH	3272	-
2	0.5	GY	3273	-	Remote Function Actuator Return	2	0.5	GY	3273	--
3	0.5	YE/L-GN	3274	-	Remote Function Actuator Transmit Signal	3	0.5	YE/L-GN	3274	-
4	0.5	L-BU/WH	3275	-	Remote Function Actuator Receive Signal	4	0.5	L-BU/WH	3275	-
5	0.35	GY/L-GN	2555	-	Rear Park Assist Disable Signal	5	0.35	GY/L-GN	2555	--
6	0.35	L-GN/BN	5852	-	Rear Park Assist LED Disable Signal	6	0.35	L-GN/BN	5852	--
7	0.5	YE	6817	-	LED Backlight Dimming Control	7	0.5	YE	6817	--
8	0.35	WH	6816	-	Indicator Dimming Control	8	0.35	WH	6816	-
9-11	--	--	--	--	Not Used	9-11	--	--	--	--
12	0.5	GY/L-GN	328	-	Interior Lamp Defeat Switch Signal	12	0.5	GY/L-GN	328	-
13	0.5	GY	156	-	Courtesy Lamp Switch Signal	13	0.5	GY	156	-
14	0.35	VT/L-GN	39	-	Run/Crank Ignition 1 Voltage	14	0.5	VT/L-GN	39	-
15-16	--	--	--	--	Not Used	15-16	--	--	--	-

© Copyright Chevrolet. All rights reserved

X315 Console Harness to Instrument Panel Harness

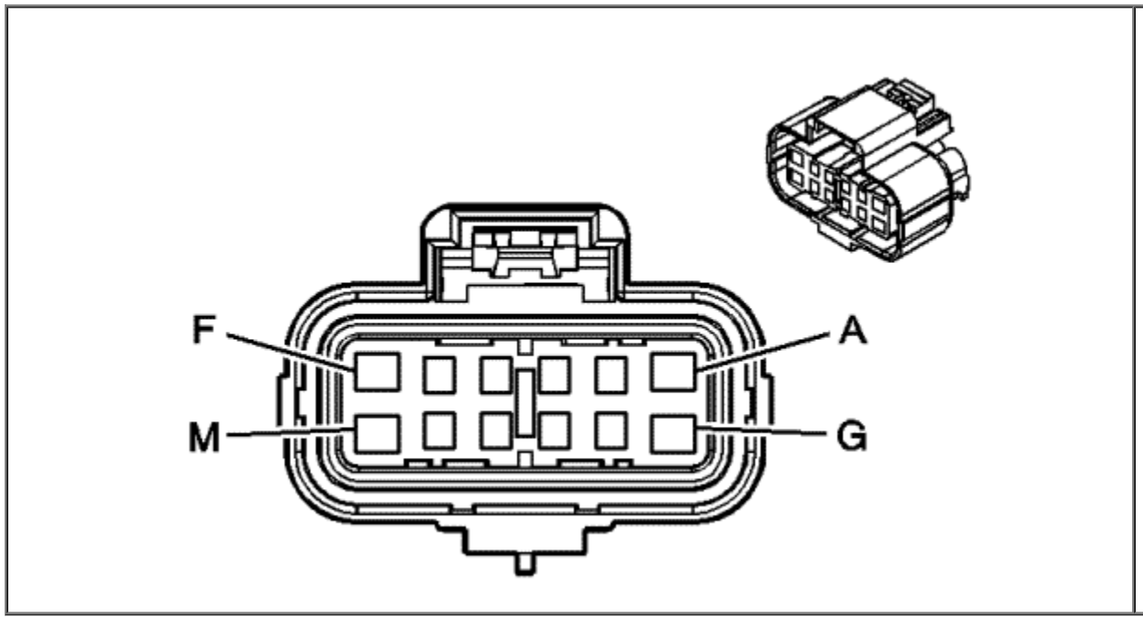

Connector Part Information

Harness Type: Console
OEM Connector: 15336205
Service Connector: 88986267
Description: 12-Way F GT Mixed (BK)

Terminal Part Information

Pins: A, G
Terminated Lead: 13575753
Release Tool: J-38125-553
Diagnostic Test Probe: J-35616-4A (PU)

Pins: B-E, H-K
Terminated Lead: 13575735

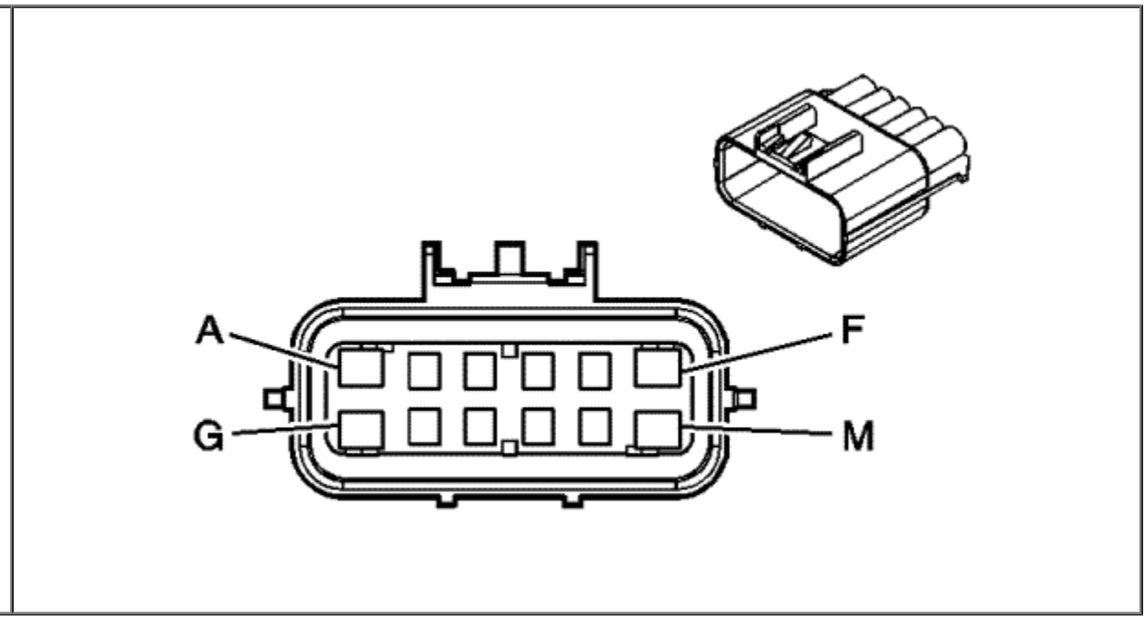

Connector Part Information

Harness Type: Instrument Panel
OEM Connector: 15336209
Service Connector: 88986259
Description: 12-Way M GT Mixed (BK)

Terminal Part Information

Pins: A, G
Terminated Lead: 13575507
Release Tool: J-38125-553
Diagnostic Test Probe: J-35616-5 (PU)

Pins: B-E, H-K
Terminated Lead: 13575502

Release Tool: J-38125-553
Diagnostic Test Probe: J-35616-2A (GY)

Release Tool: J-38125-553
Diagnostic Test Probe: J-35616-3 (GY)

X315 Console Harness to Instrument Panel Harness

Pin	Size	Colour	Circuit	Option	Function	Pin	Size	Colour	Circuit	Option
A	1	VT	1701	-	Retained Accessory Power Fuse Supply Voltage	A	1	VT	1701	-
B	0.35	BN	5839	-	Left Auxiliary Audio Signal (2)	B	0.35	BN	5839	-
C	0.35	YE	5841	-	Right Auxiliary Audio Signal (2)	C	0.35	YE	5841	--
D	0.35	BK	5843	-	Auxiliary Audio Common Signal	D	0.35	BK	5843	-
E	0.35	BK	5842	-	Auxiliary Audio Screen (2)	E	0.35	BK	5842	-
F	--	--	--	--	Not Used	F	--	--	--	--
G	1	BK	2150	--	Ground	G	1	BK	2150	--
H	0.5	OG	3554	-	Passive Start Interior Aerial 2 Signal Hi	H	0.5	OG	3554	-
J	0.5	OG/L-BU	3555	-	Passive Start Interior Aerial 2 Signal Lo	J	0.5	OG/L-BU	3555	-
K	0.5	L-BU	2060	-	Auxiliary Detection Signal	K	0.5	L-BU	2060	-
L-M	--	--	--	--	Not Used	L-M	--	--	--	-

© Copyright Chevrolet. All rights reserved

X320 Body Harness to Driver Seat Harness

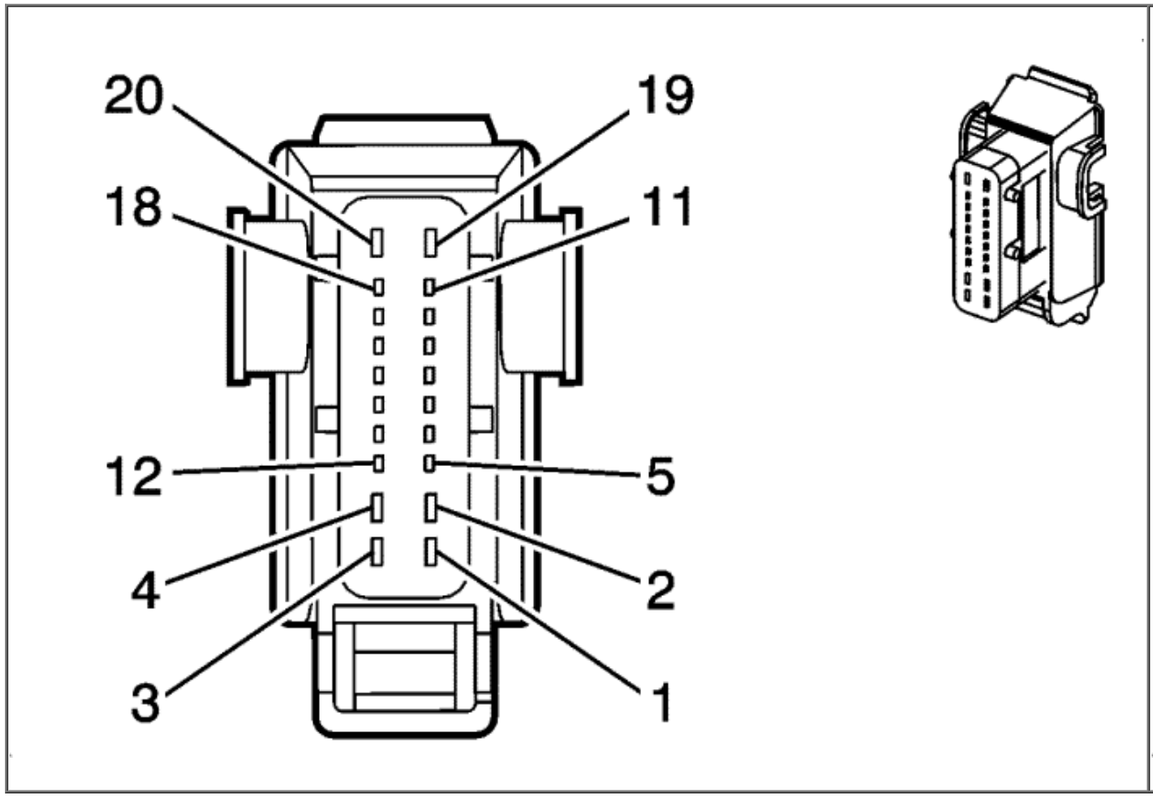

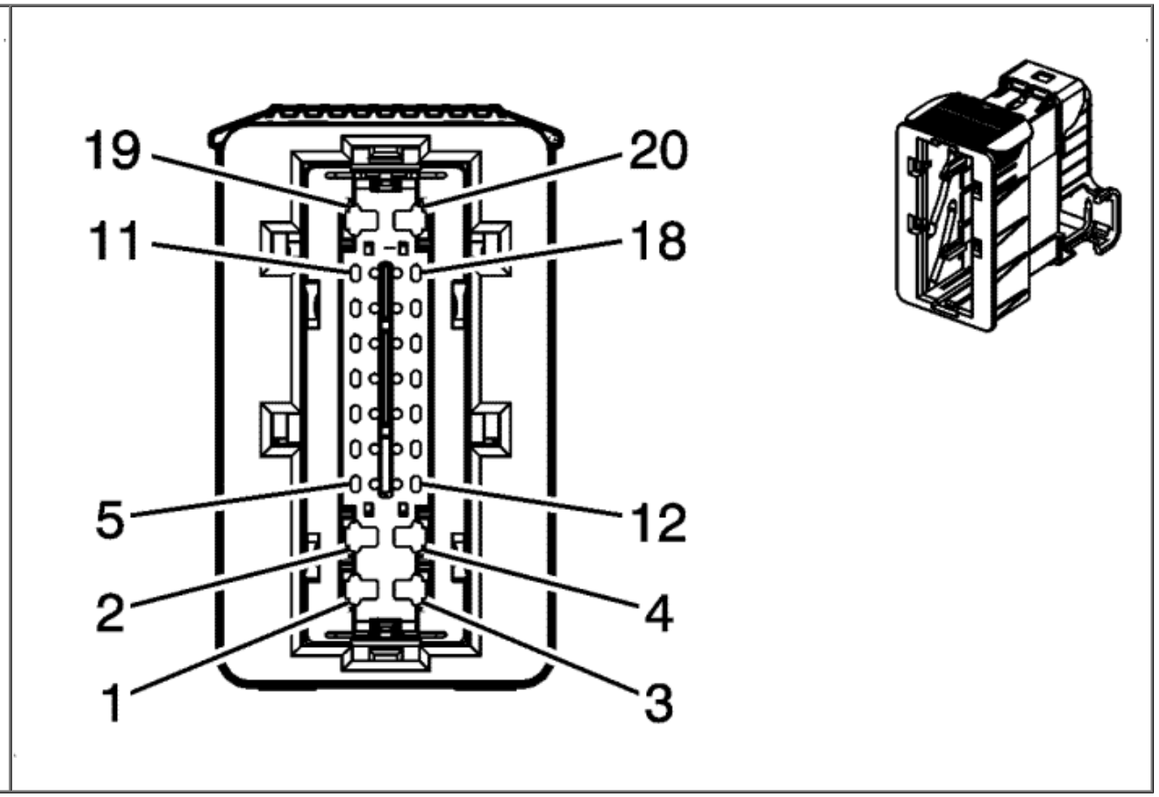

Connector Part Information

Harness Type: Body
OEM Connector: 902873-00
Service Connector: 13577553
Description: 20-Way F Hybrid Series (BK)

Connector Part Information

Harness Type: Driver Seat
OEM Connector: 902874-00
Service Connector: Service by Harness - See Part Catalog
Description: 20-Way M 1.6 2.8 Timer Series (BK)

Terminal Part Information

Pins: 1, 3, 4 and 19
Terminated Lead: 13579990
Release Tool: Pending
Diagnostic Test Probe: Pending

Terminal Part Information

Pins: 5, 8-13, 15, 16
Terminated Lead: 13579989
Release Tool: Pending
Diagnostic Test Probe: Pending

Pin: 20
Terminated Lead: 13579987
Release Tool: Pending
Diagnostic Test Probe: Pending

Terminated Lead: Service by Harness - See Part Catalog
Release Tool: Service by Harness - See Part Catalog
Diagnostic Test Probe: Service by Harness - See Part Catalog

X320 Body Harness to Driver Seat Harness

Pin	Size	Colour	Circuit	Option	Function	Pin	Size	Colour	Circuit	Option
1	1	RD/GY	1740	-	Battery Positive Voltage	1	1	RD	40	-
2	--	--	--	--	Not Used	2	--	--	--	--
3	1	BN/L-BU	2479	KA1	Passenger Heated Seat Element Supply Voltage	3	1	D-BU	2479	KA1
4	--	--	--	--	Not Used	4	--	--	--	--
5	0.5	L-GN	5060	--	Low Speed GMLAN Serial Data	5	0.5	D-GN	5060	-
6-7	--	--	--	--	Not Used	6-7	--	--	--	-
8	0.5	OG/L-BU	3068	-	Driver Side Impact Module High Control	8	0.5	L-BU	3068	--
9	0.5	L-GN/OG	3069	-	Driver Side Impact Module Low Control	9	0.5	L-GN/BK	3069	--
10	0.5	BK/GY	2435	-	Low Reference	10	0.5	PK	2435	--
11	0.5	WH/GY	2434	KA1	Passenger Heated Seat NTC Signal	11	0.5	GY	2434	KA1
12	0.5	OG/YE	3481	-	Driver Seat Belt Anchor Pretensioner High Control	12	0.5	L-BU	3481	--
13	0.5	YE/OG	3482	-	Driver Seat Belt Anchor Pretensioner Low Control	13	0.5	D-GN	3482	--
14	--	--	--	--	Not Used	14	--	--	--	--
15	0.5	OG/BN	238	-	Driver Seat Belt Switch Signal	15	0.5	TN/WH	238	-
16	0.5	BK/OG	1363	-	Low Reference	16	0.5	D-BU	1363	-
17-18	--	--	--	--	Not Used	17-18	--	--	--	--
19	1	L-BU/BK	2433	KA1	Passenger Heated Back Element Return	19	1	L-BU	2433	KA1
20	2.5	BK	1550	--	Ground	20	2.5	BK	1550	-

© Copyright Chevrolet. All rights reserved

X322 Side Air Bag Jumper to Driver Seat Harness

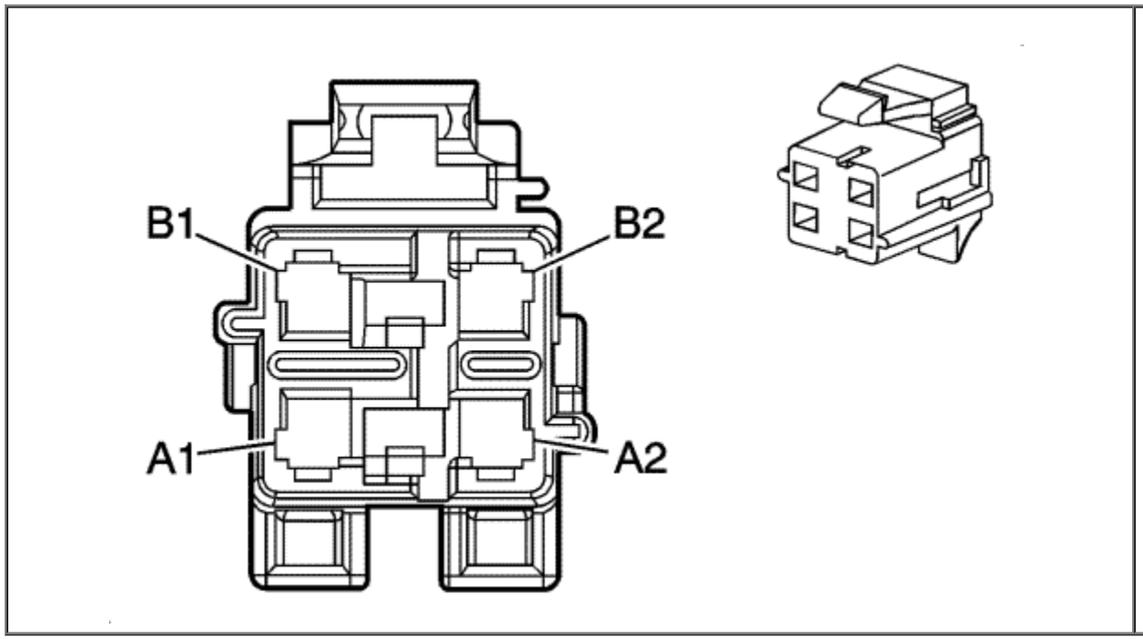

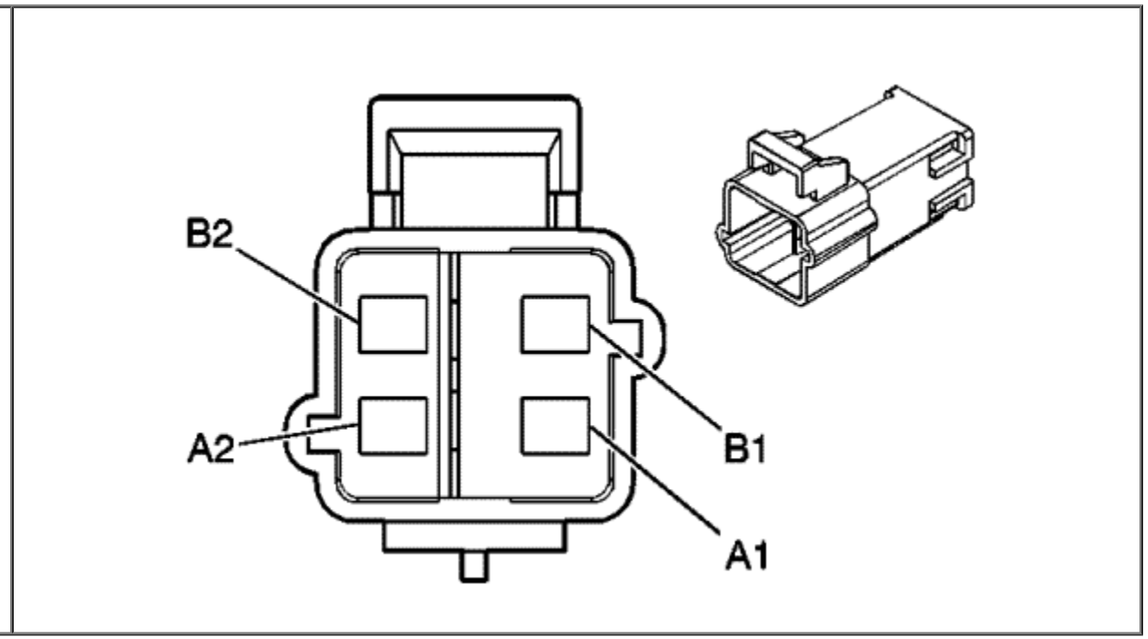

Connector Part Information

Harness Type: Side Air Bag Jumper
OEM Connector: 15479525
Service Connector: 19149302
Description: 4-Way F Metri-Pack 280 Series (YE)

Terminal Part Information

Terminated Lead: Service by Harness - See Part Catalog
Release Tool: J-38125-11A
Diagnostic Test Probe: J-35616-4A (PU)

Connector Part Information

Harness Type: Driver Seat
OEM Connector: 15336476
Service Connector: 88987998
Description: 4-Way M Metri-Pack 280 Series (YE)

Terminal Part Information

Terminated Lead: 13575715
Release Tool: J-38125-11A
Diagnostic Test Probe: J-35616-5 (PU)

X322 Side Air Bag Jumper to Driver Seat Harness

Pin	Size	Colour	Circuit	Option	Function	Pin	Size	Colour	Circuit	Option
A1	0.35	L-BU	3068	-	Driver Side Impact Module High Control	A1	0.35	L-BU	3068	-
A2	0.35	L-GN/BK	3069	-	Driver Side Impact Module Low Control	A2	0.35	L-GN/BK	3069	-
B1-B2	--	--	--	--	Not Used	B1-B2	--	--	--	-

© Copyright Chevrolet. All rights reserved

X325 Body Harness to Passenger Seat Harness

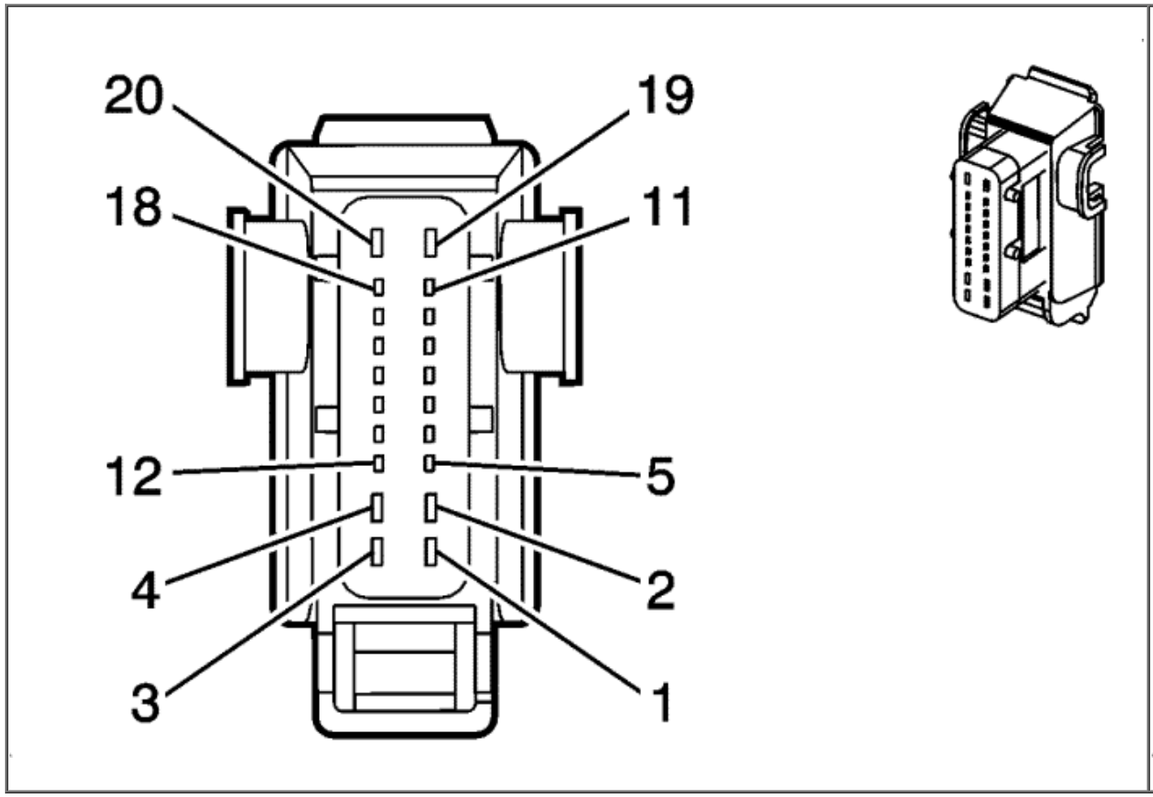

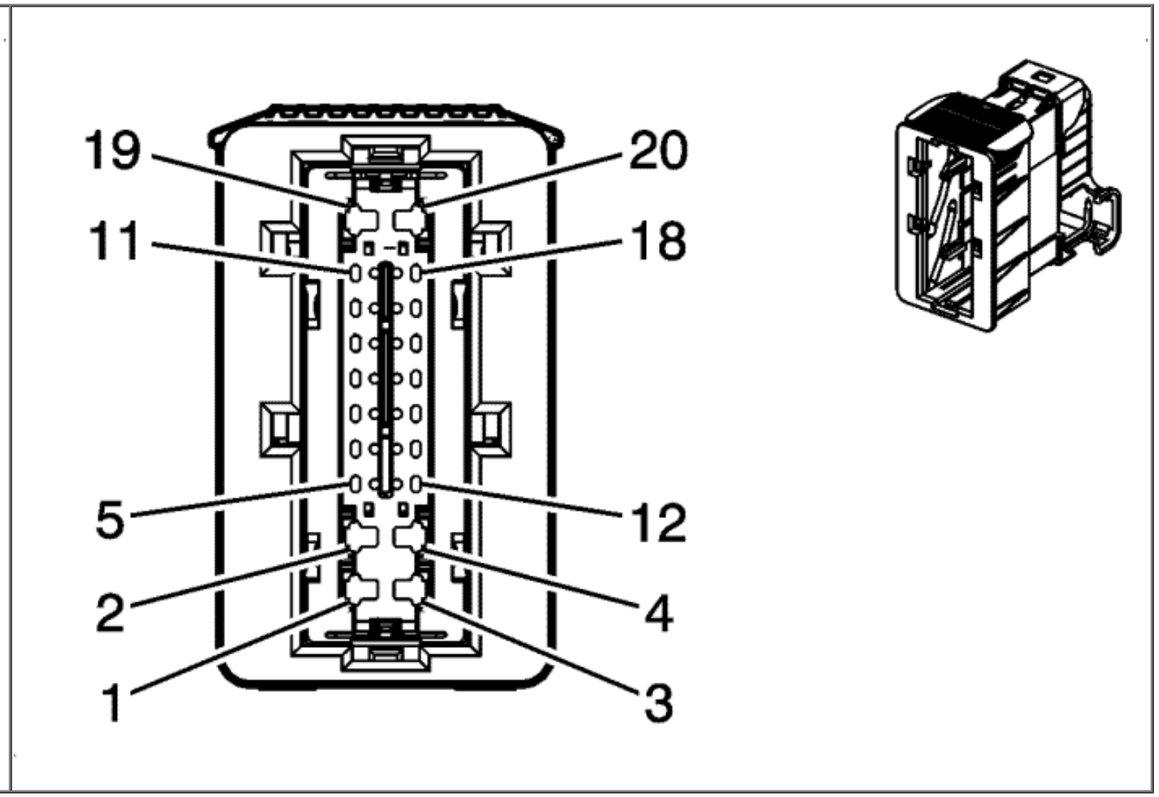

Connector Part Information

Harness Type: Body
OEM Connector: 902873-00
Service Connector: 13577553
Description: 20-Way F Hybrid Series (BK)

Terminal Part Information

Pins: 3, 4 and 19
Terminated Lead: 13579990
Release Tool: Pending
Diagnostic Test Probe: Pending

Connector Part Information

Harness Type: Passenger Seat
OEM Connector: 902874-00
Service Connector: Service by Harness - See Part Catalog
Description: 20-Way M 1.6 2.8 Timer Series (BK)

Terminal Part Information

Terminated Lead: Service by Harness - See Part Catalog

Pins: 5, 8-13, 15, 16, 18
Terminated Lead: 13579989
Release Tool: Pending
Diagnostic Test Probe: Pending

Release Tool: Service by Harness - See Part Catalog
Diagnostic Test Probe: Service by Harness - See Part Catalog

X325 Body Harness to Passenger Seat Harness

Pin	Size	Colour	Circuit	Option	Function	Pin	Size	Colour	Circuit	Option
1-2	--	--	--	--	Not Used	1-2	--	--	--	--
3	1	BN/L-BU	2479	KA1	Passenger Heated Seat Element Supply Voltage	3	1	D-BU	2479	KA1
4	0.5	RD/GY	2440	-	Battery Positive Voltage	4	0.5	RD	2440	--
5	0.5	L-GN	5060	--	Low Speed GMLAN Serial Data	5	0.5	D-GN	5060	-
6-7	--	--	--	--	Not Used	6-7	--	--	--	-
8	0.5	OG/GY	3066	-	Passenger Side Impact Module High Control	8	0.5	VT	3066	--
9	0.5	BN/OG	3067	-	Passenger Side Impact Module Low Control	9	0.5	TN/BK	3067	--
10	0.5	BK/GY	2435	-	Low Reference	10	0.5	PK	2435	--
11	0.5	WH/GY	2434	KA1	Passenger Heated Seat NTC Signal	11	0.5	GY	2434	KA1
12	0.5	OG/BN	3479	-	Passenger Seat Belt Anchor Pretensioner High Control	12	0.5	BN	3479	--
13	0.5	GY/OG	3480	-	Passenger Seat Belt Anchor Pretensioner Low Control	13	0.5	D-GN/WH	3480	--
14	--	--	--	--	Not Used	14	--	--	--	--
15	0.5	OG/VT	1362	-	Passenger Seat Belt Switch Signal	15	0.5	OG	1362	-
16	0.5	BK/OG	1361	-	Low Reference	16	0.5	L-BU	1361	-
17	--	--	--	--	Not Used	17	--	--	--	--
18	0.5	BK	2050	--	Ground	18	0.5	BK	2050	--
19	1	L-BU/BK	2433	KA1	Passenger Heated Back Element Return	19	1	L-BU	2433	KA1
20	--	--	--	--	Not Used	20	--	--	--	-

© Copyright Chevrolet. All rights reserved

X327 Side Air Bag Jumper to Passenger Seat Harness

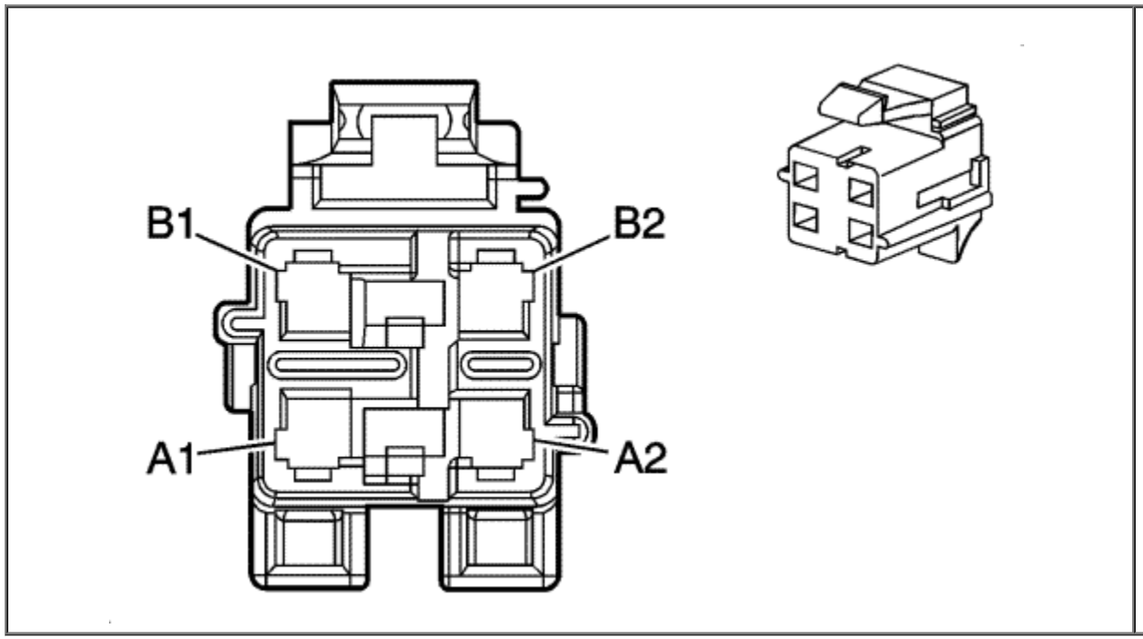

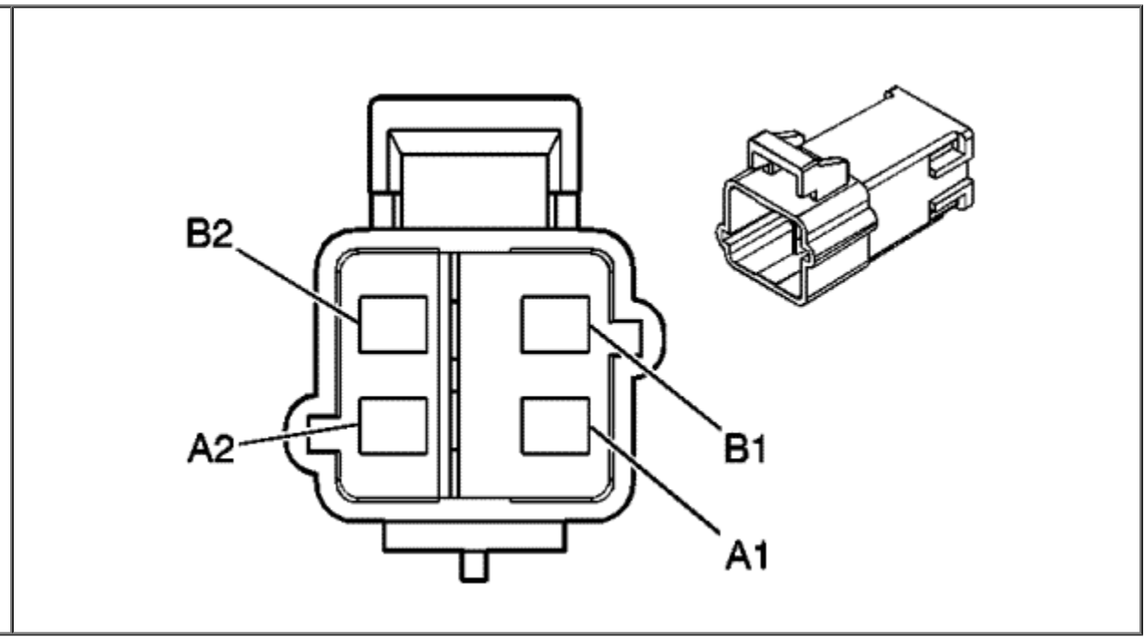

Connector Part Information

Harness Type: Side Air Bag Jumper
OEM Connector: 15479525
Service Connector: 19149302
Description: 4-Way F Metri-Pack 280 Series (YE)

Terminal Part Information

Terminated Lead: Service by Harness - See Part Catalog
Release Tool: J-38125-11A
Diagnostic Test Probe: J-35616-4A (PU)

Connector Part Information

Harness Type: Driver Seat
OEM Connector: 15336476
Service Connector: 88987998
Description: 4-Way M Metri-Pack 280 Series (YE)

Terminal Part Information

Terminated Lead: 13575715
Release Tool: J-38125-11A
Diagnostic Test Probe: J-35616-5 (PU)

X327 Side Air Bag Jumper to Passenger Seat Harness

Pin	Size	Colour	Circuit	Option	Function	Pin	Size	Colour	Circuit	Option
A1	0.35	L-BU	3066	-	Passenger Side Impact Module High Control	A1	0.35	VT	3066	-
A2	0.35	L-GN/BK	3067	-	Passenger Side Impact Module Low Control	A2	0.35	TN/BK	3067	-
B1-B2	--	--	--	--	Not Used	B1-B2	--	--	--	-

© Copyright Chevrolet. All rights reserved

X345 Driver's Seat Heater Jumper to Driver's Seat Cushion Harness

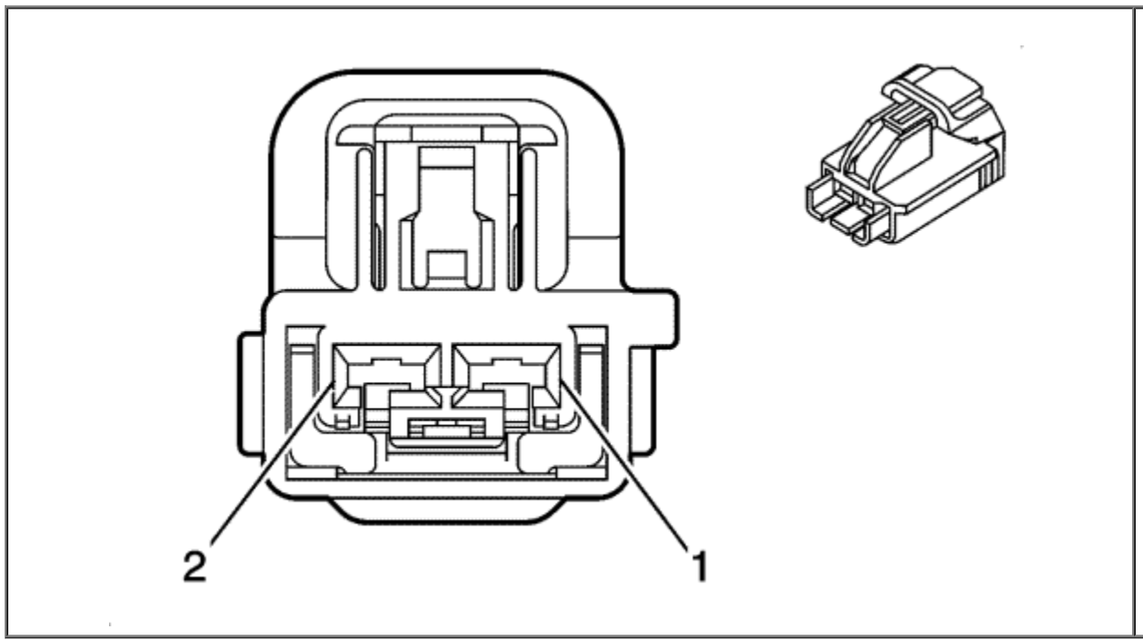

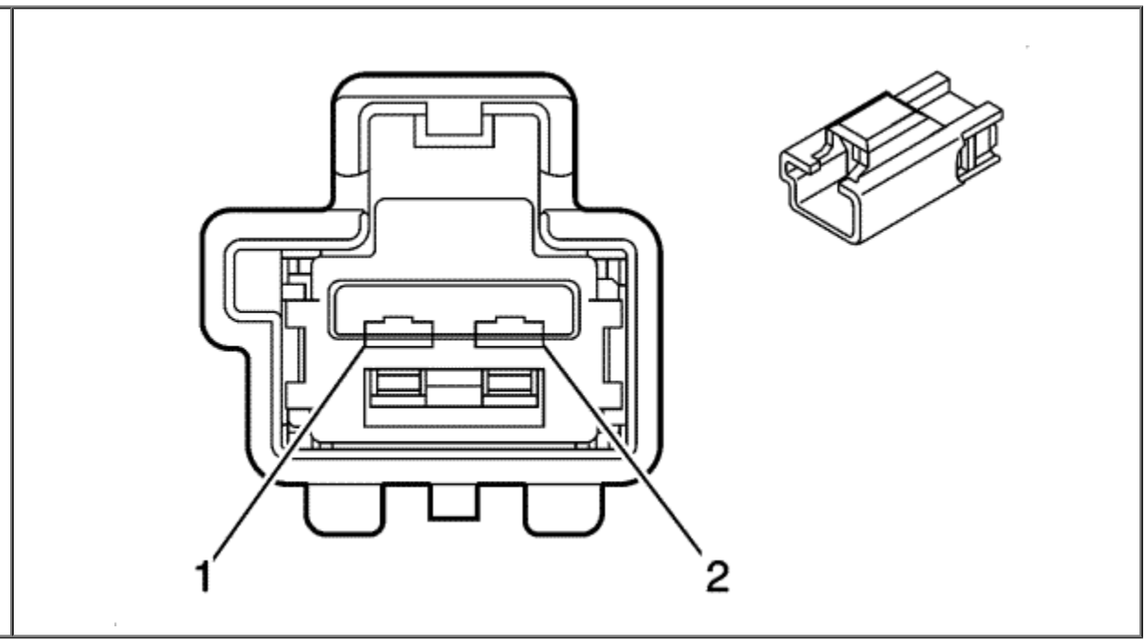

Connector Part Information

Harness Type: Driver's Seat Heater Jumper
OEM Connector: 7283-6445-40
Service Connector: Service by Harness - See Part Catalog
Description: 2-Way F Kaizen YESC Series (L-GY)

Terminal Part Information

Terminated Lead: 13575838
Release Tool: J-38125-11A
Diagnostic Test Probe: J-35616-35 (VT)

Connector Part Information

Harness Type: Driver Seat
OEM Connector: 7282-6445-40
Service Connector: 88988510
Description: 2-Way M Kaizen YESC Series (L-GY)

Terminal Part Information

Terminated Lead: 13575823
Release Tool: J-38125-11A
Diagnostic Test Probe: J-35616-5 (PU)

X345 Driver's Seat Heater Jumper to Driver's Seat Cushion Harness

Pin	Size	Colour	Circuit	Option	Function	Pin	Size	Colour	Circuit	Option
1	0.8	L-GN	2078	-	Driver Heated Seat Element Return	1	0.8	L-GN	2078	-
2	0.8	VT	2424	-	Driver Heated Back Element Return	2	0.8	VT	2424	-

© Copyright Chevrolet. All rights reserved

X346 Passenger Seat Heater Jumper to Passenger Seat Cushion Harness

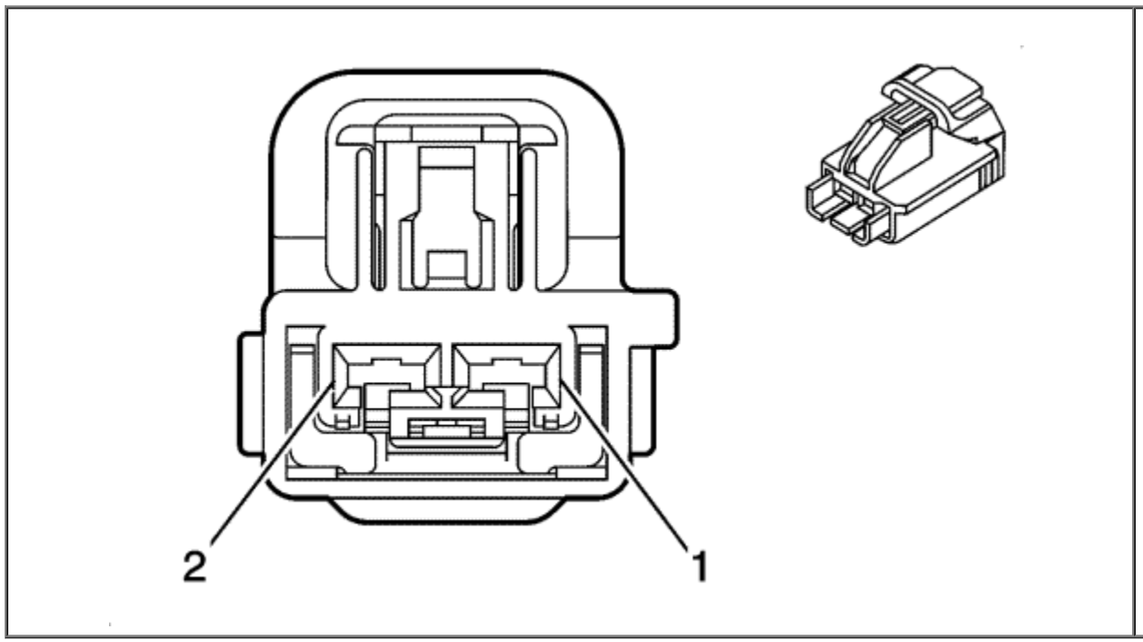

Connector Part Information

Harness Type: Passenger Seat Heater Jumper
OEM Connector: 7283-6445-40
Service Connector: Service by Harness - See Part Catalog
Description: 2-Way F Kaizen YESC Series (L-GY)

Terminal Part Information

Terminated Lead: 13575838
Release Tool: J-38125-11A
Diagnostic Test Probe: J-35616-35 (VT)

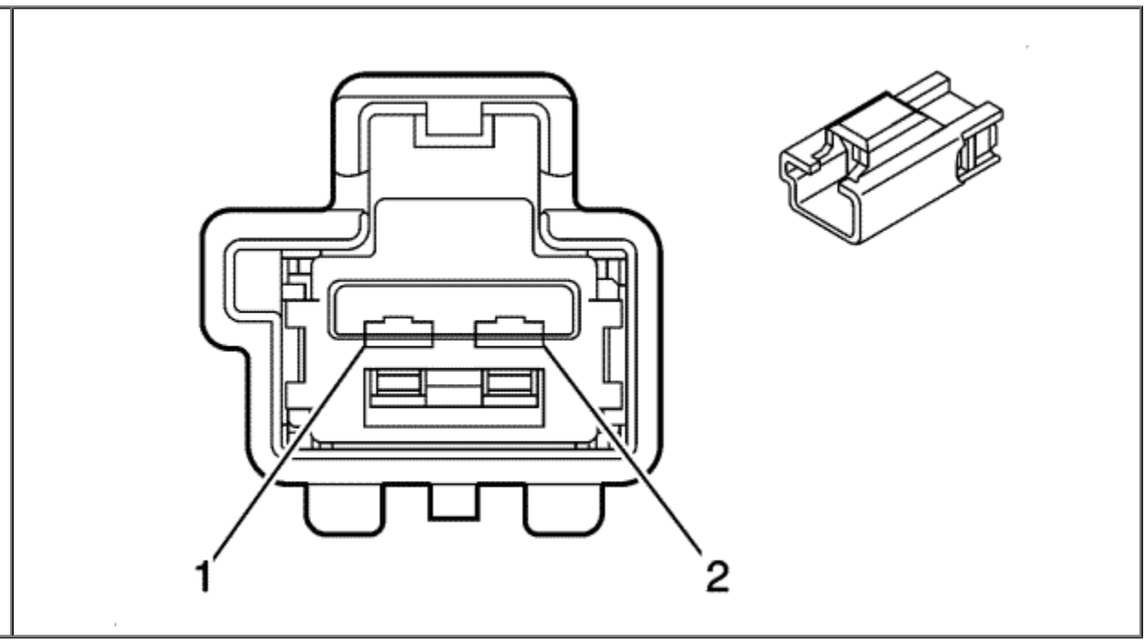

Connector Part Information

Harness Type: Passenger Seat
OEM Connector: 7282-6445-40
Service Connector: 88988510
Description: 2-Way M Kaizen YESC Series (L-GY)

Terminal Part Information

Terminated Lead: 13575823
Release Tool: J-38125-11A
Diagnostic Test Probe: J-35616-5 (PU)

X346 Passenger Seat Heater Jumper to Passenger Seat Cushion Harness

Pin	Size	Colour	Circuit	Option	Function	Pin	Size	Colour	Circuit	Option
1	0.8	L-GN	2078	-	Driver Heated Seat Element Return	1	0.8	L-BU	2433	-
2	0.8	VT	2424	-	Driver Heated Back Element Return	2	0.8	D-BU/YE	2480	-

© Copyright Chevrolet. All rights reserved

X350 Body Harness to EVAP Harness

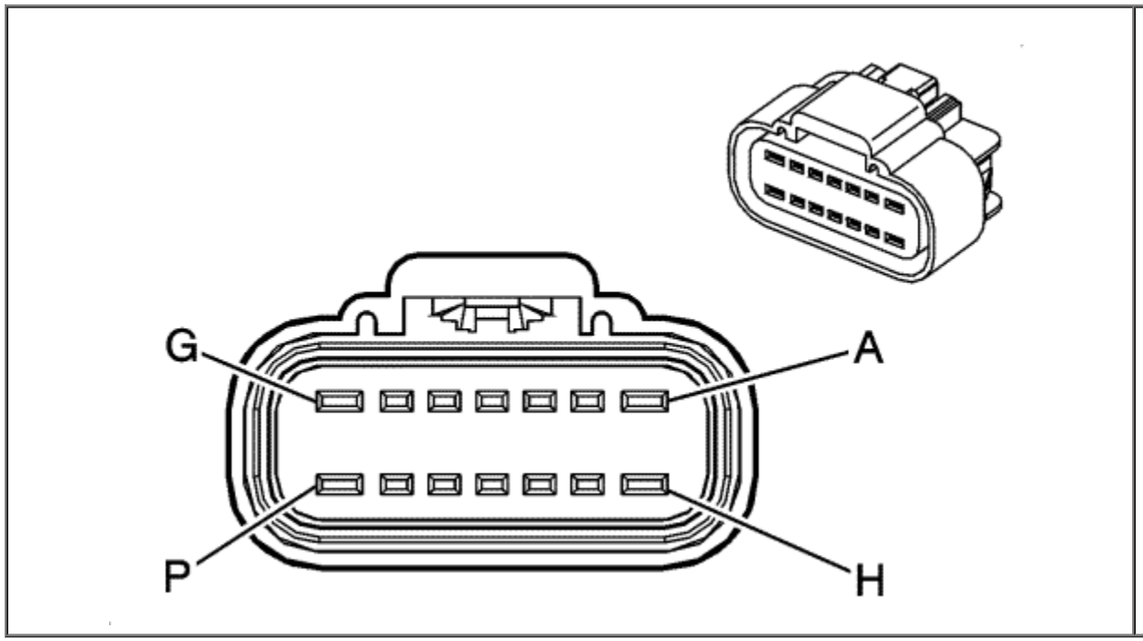

Connector Part Information

Harness Type: Body
OEM Connector: 15437404
Service Connector: 19179461
Description: 14-Way F GT 150/250 Series, Sealed (BK)

Terminal Part Information

Pins: A, H
Terminated Lead: 13575409
Release Tool: J-38125-553
Diagnostic Test Probe: J-35616-4A (PU)

Pins: B-F, J-L, N

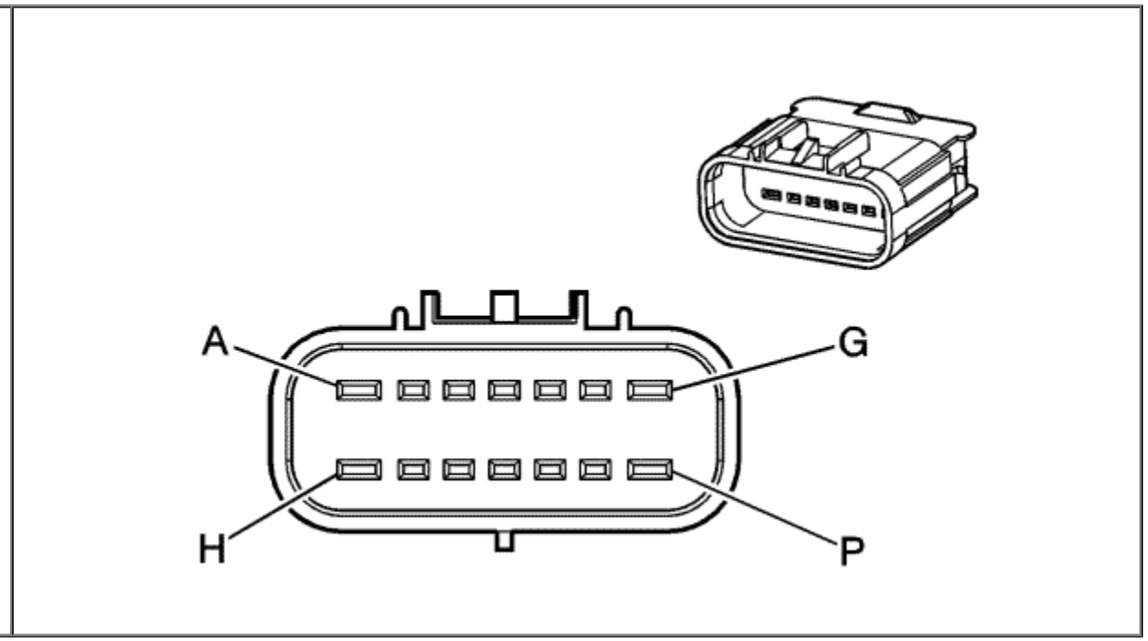

Connector Part Information

Harness Type: EVAP
OEM Connector: 15422562
Service Connector: 88987613
Description: 14-Way M GT Series, Sealed (BK)

Terminal Part Information

Pins: A, H
Terminated Lead: 13575443
Release Tool: J-38125-553
Diagnostic Test Probe: J-35616-5 (PU)

Terminated Lead: Pins J-L - 13327112
Terminated Lead: Pins B-F, N - 13575413
Release Tool: J-38125-553
Diagnostic Test Probe: J-35616-2A (GY)

Pins: G
Terminated Lead: 13327132
Release Tool: J-38125-553
Diagnostic Test Probe: J-35616-4A (PU)

Pins: B-F, J-L, N
Terminated Lead: 13575397
Release Tool: J-38125-553
Diagnostic Test Probe: J-35616-3 (GY)

Pins: G
Terminated Lead: 13327134
Release Tool: J-38125-553
Diagnostic Test Probe: J-35616-5 (PU)

X350 Body Harness to EVAP Harness

Pin	Size	Colour	Circuit	Option	Function	Pin	Size	Colour	Circuit	Option
A	2	GY	120	-	Fuel Pump Supply Voltage	A	2	GY	120	-
B	0.5	L-BU/VT	1589	-	Primary Fuel Level Sensor Signal	B	0.5	L-BU/VT	1589	-
C	0.5	BK/L-GN	6281	-	Low Reference	C	0.5	BK/L-GN	6281	--
D	0.5	YE/RD	2709	-	5 Volt Reference	D	0.5	YE/RD	2709	-
E	0.5	L-BU/WH	890	-	Fuel Tank Pressure Sensor Signal	E	0.5	L-BU/WH	890	-
F	0.5	VT	5087	-	High-Voltage Interlock Loop Signal (1)	F	0.5	VT	5087	-
G	0.5	VT	5087	-	High-Voltage Interlock Loop Signal (1)	G	0.5	VT	5087	--
H	2	BK/L-GN	1580	-	Low Reference	H	2	BK/L-GN	1580	-
J	0.35	BK/YE	7447	-	Low Reference	J	0.5	BK/YE	7447	-
K	0.35	L-BU/WH	7446	-	Fuel Line Pressure Sensor Signal	K	0.5	L-BU/WH	7446	--
L	0.35	BN/RD	7445	-	5 Volt Reference	L	0.5	BN/RD	7445	-
M	--	--	--	--	Not Used	M	--	--	--	--
N	0.5	L-BU	7443	-	Fuel System Control Module Shield Extension	N	--	--	--	-
P	--	--	--	--	Not Used	P	--	--	--	--

© Copyright Chevrolet. All rights reserved

X351 Body Harness to EVAP Harness

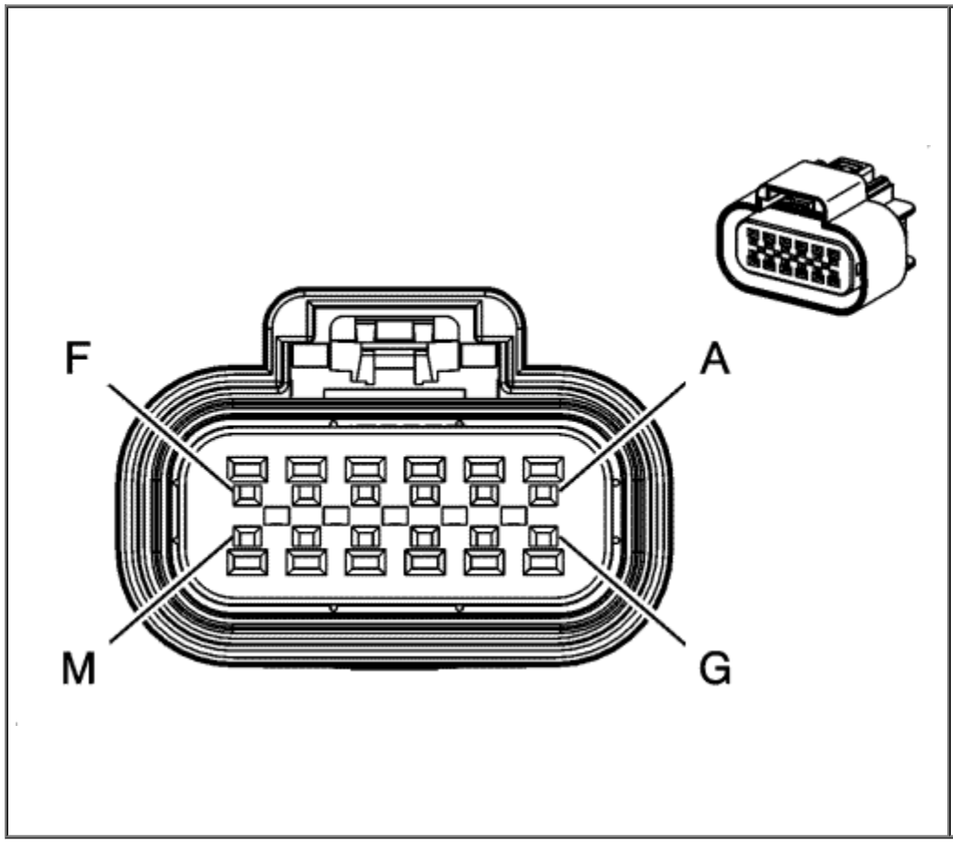

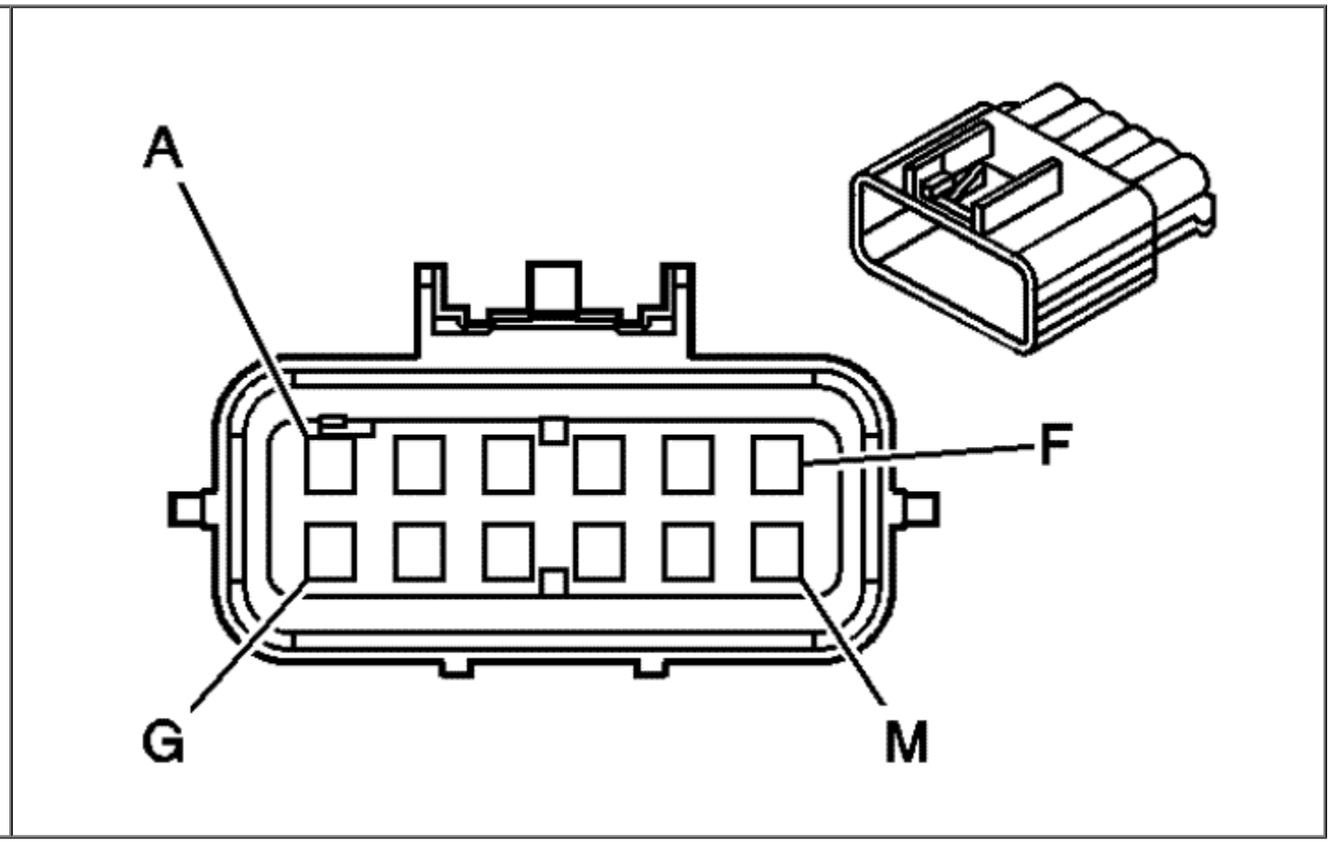

Connector Part Information

Harness Type: Body
OEM Connector: 13530777
Service Connector: 13504588
Description: 12-Way F GT 150 Series, Sealed (BK)

Terminal Part Information

Connector Part Information

Harness Type: EVAP
OEM Connector: 15326854
Service Connector: 88986252
Description: 12-Way M GT 150 Series, Sealed (BK)

Terminal Part Information

Terminated Lead: 13575413
Release Tool: J-38125-553
Diagnostic Test Probe: J-35616-2A (GY)

Terminated Lead: 13575397
Release Tool: J-38125-553
Diagnostic Test Probe: J-35616-3 (GY)

X351 Body Harness to EVAP Harness

Pin	Size	Colour	Circuit	Option	Function	Pin	Size	Colour	Circuit	Option
A	0.5	GY	3723	-	Evaporative Emission System Leak Detection Pump Assembly Change-over Valve Earth	A	0.5	GY	3723	-
B	0.5	L-BU	3722	-	Evaporative Emission System Leak Detection Pump Assembly Vacuum Pump Earth	B	0.5	L-BU	3722	-
C	--	--	--	--	Not Used	C	--	--	--	--
D	0.5	L-BU/L-GN	3725	-	Evaporative Emission System Leak Detection Pump Assembly Pressure Sensor Signal	D	0.5	L-BU/L-GN	3725	-
E	0.5	BN/RD	3724	-	Evaporative Emission System Leak Detection Pump Assembly Pressure Sensor Voltage Reference	E	0.5	BN/RD	3724	-
F	0.5	RD/WH	1340	--	Battery Positive Voltage	F	0.5	RD/WH	1340	--
G	0.5	VT/L-BU	5293	-	Not Used (E85)	G	--	--	--	--
H	0.5	WH	1579	-	Not Used (E85)	H	--	--	--	--
J	0.5	BK	1450	-	Not Used (E85)	J	--	--	--	--
K-L	--	--	--	--	Not Used	K-L	--	--	--	--
M	0.5	L-GN	3726	-	EVAP Vent Solenoid Valve Earth	M	0.5	L-GN	3726	-

© Copyright Chevrolet. All rights reserved

X354 EVAP Harness to Fuel Pump Harness

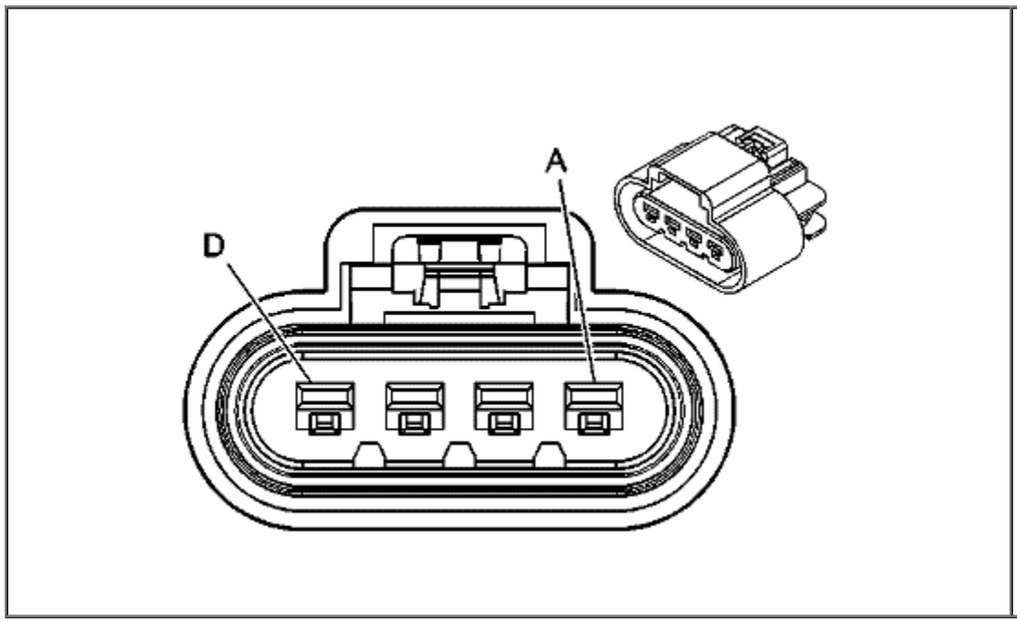

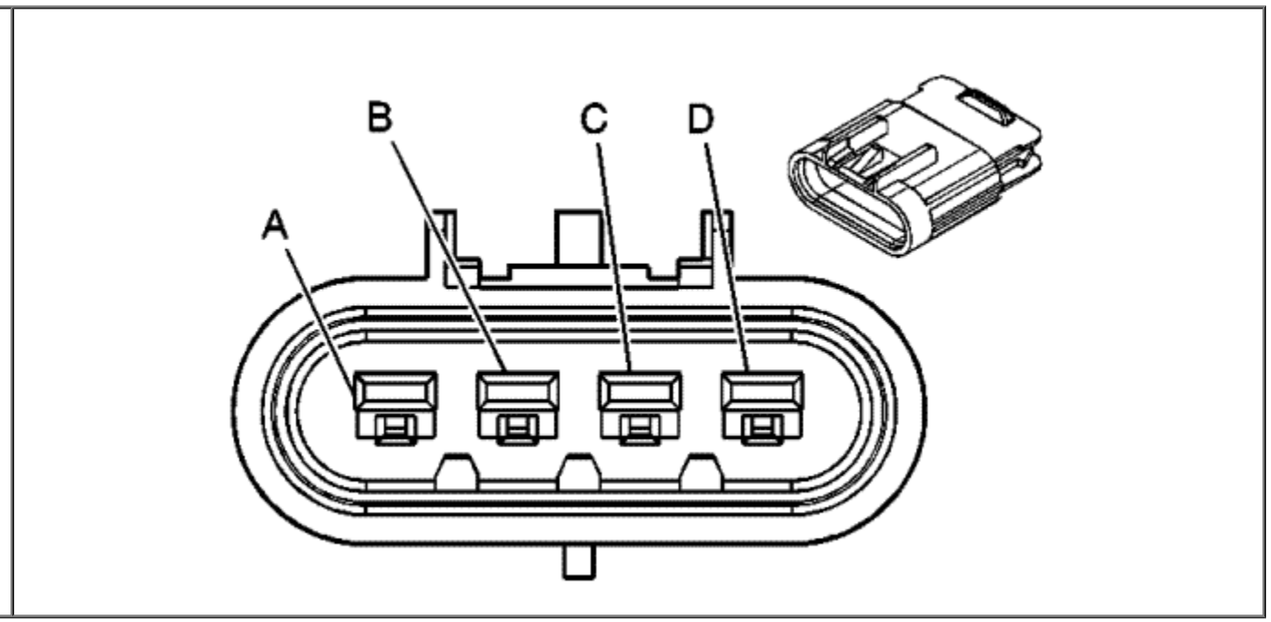

Connector Part Information

Harness Type: Fuel Pump
OEM Connector: 13521459
Service Connector: 19152589
Description: 4-Way F GT 280 5.8 Series, Sealed (BK)

Terminal Part Information

Terminated Lead: Pins A, B - 13575405
Terminated Lead: Pins C, D - 13327132
Release Tool: J-38125-553
Diagnostic Test Probe: J-35616-4A (PU)

Connector Part Information

Harness Type: EVAP
OEM Connector: 15326633
Service Connector: 15306361
Description: 4-Way M GT 280 Sealed (BK)

Terminal Part Information

Pins: A, B
Terminated Lead: 13575443
Release Tool: J-38125-553
Diagnostic Test Probe: J-35616-5 (PU)

Pins: C, D
Terminated Lead: 13327134

Release Tool: J-38125-553
Diagnostic Test Probe: J-35616-5 (PU)

X354 EVAP Harness to Fuel Pump Harness

Pin	Size	Colour	Circuit	Option	Function	Pin	Size	Colour	Circuit	Option
A	1	GY	120	-	Fuel Pump Supply Voltage	A	2	GY	120	-
B	1	BK/L-GN	1580	-	Low Reference	B	2	BK/L-GN	1580	-
C	0.5	BK/L-GN	6281	-	Low Reference	C	0.5	BK/L-GN	6281	--
D	0.5	L-BU/VT	1589	-	Primary Fuel Level Sensor Signal	D	0.5	L-BU/VT	1589	-

© Copyright Chevrolet. All rights reserved

X355 EVAP Harness to Fuel Pressure Harness

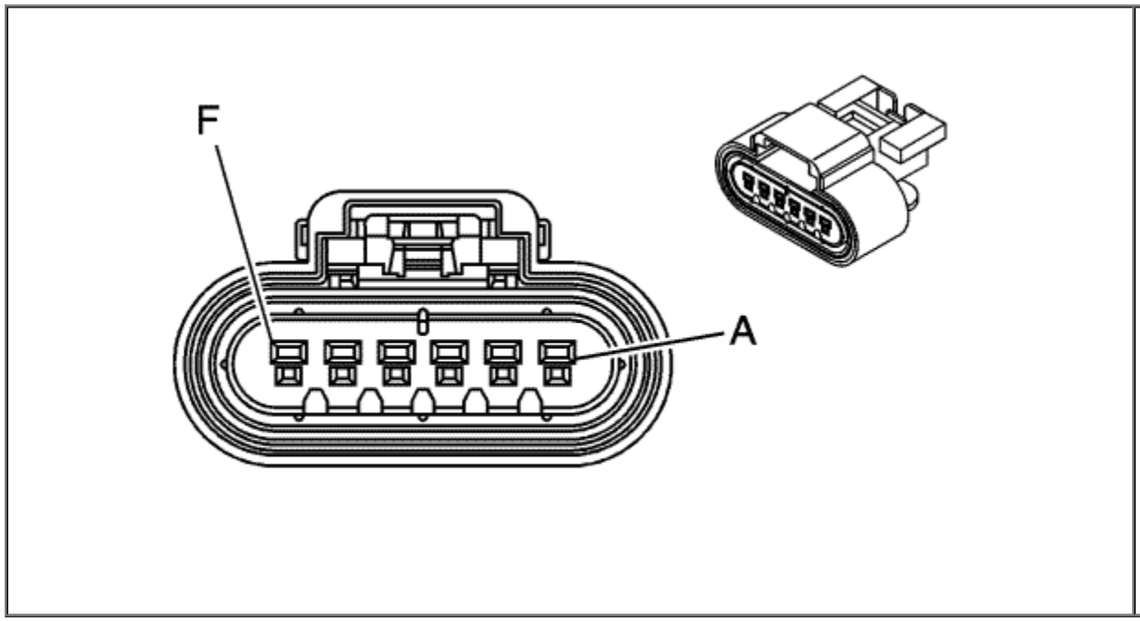

Connector Part Information

Harness Type: EVAP
OEM Connector: 15326830
Service Connector: 88988944
Description: 6-Way F GT 150 Series, Sealed (BK)

Terminal Part Information

Terminated Lead: 13575413
Release Tool: J-38125-553
Diagnostic Test Probe: J-35616-2A (GY)

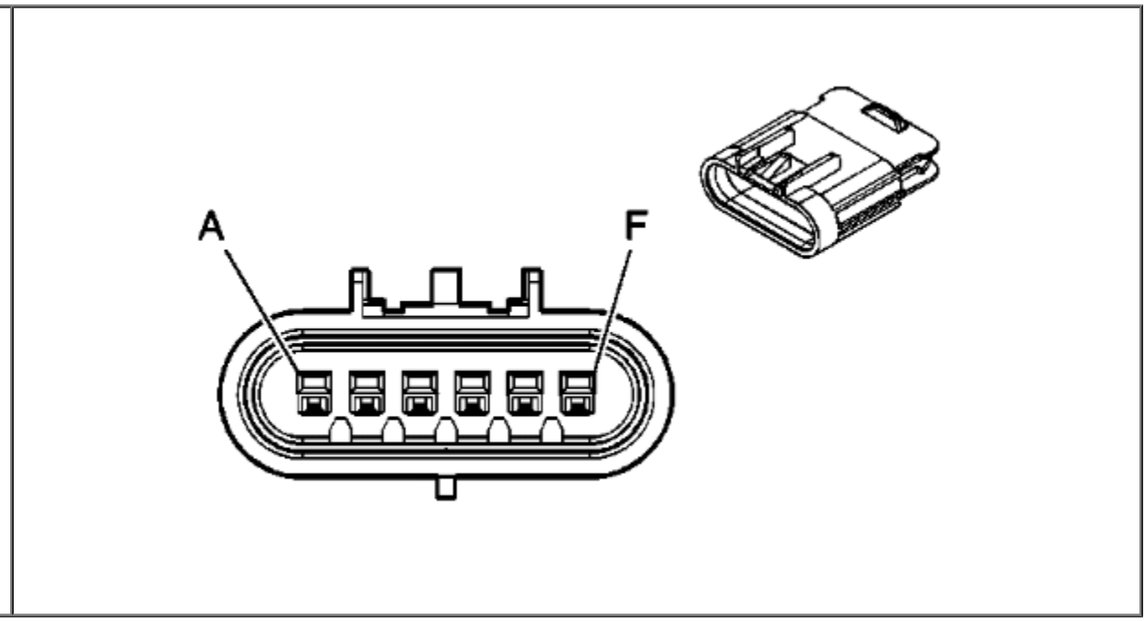

Connector Part Information

Harness Type: Fuel Pressure
OEM Connector: 15326833
Service Connector: 15326833
Description: 6-Way M GT 150 Series, Sealed (BK)

Terminal Part Information

Terminated Lead: 13575397
Release Tool: J-38125-553
Diagnostic Test Probe: J-35616-3 (GY)

X355 EVAP Harness to Fuel Pressure Harness

Pin	Size	Colour	Circuit	Option	Function	Pin	Size	Colour	Circuit	Option
A	0.5	BN/RD	7445	-	5 Volt Reference	A	0.5	BN/RD	7445	-
B	0.5	L-BU/WH	7446	-	Fuel Line Pressure Sensor Signal	B	0.5	L-BU/WH	7446	-
C	0.5	BK/YE	7447	-	Low Reference	C	0.5	BK/YE	7447	-
D-F	--	--	--	--	Not Used	D-F	--	--	--	-

© Copyright Chevrolet. All rights reserved

X450 Body Harness to Rear Fascia Harness (with UD5)

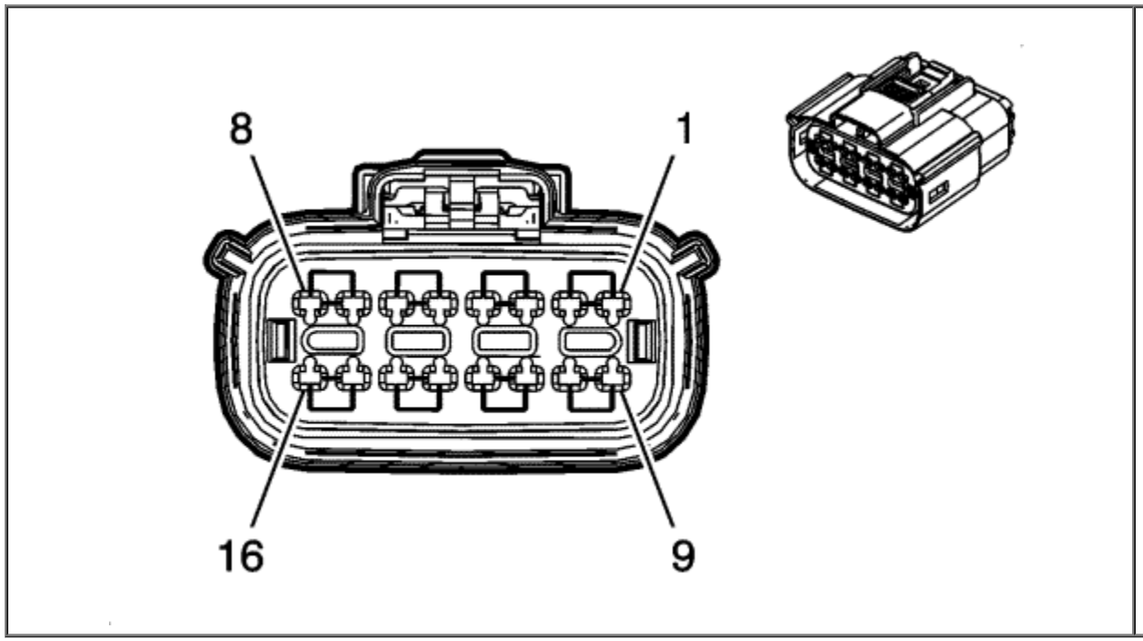

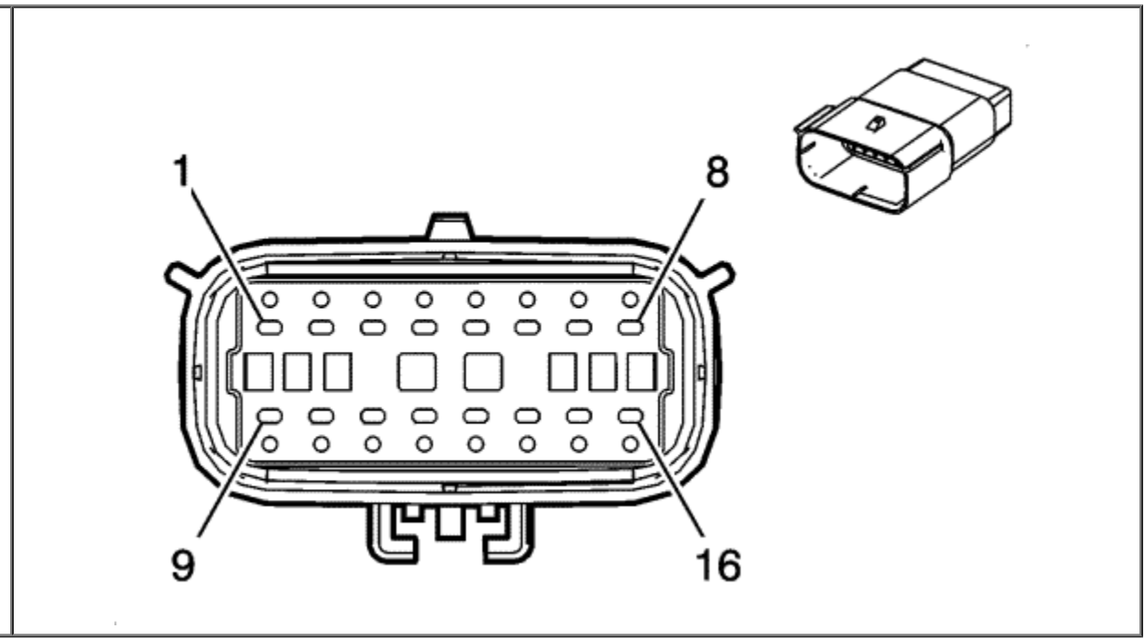

Connector Part Information

Harness Type: Body
OEM Connector: 54241634N
Service Connector: 13577516
Description: 16-Way F (BK)

Terminal Part Information

Terminated Lead: 13579989
Release Tool: Pending
Diagnostic Test Probe: Pending

Connector Part Information

Harness Type: Rear Fascia
OEM Connector: 54241610
Service Connector: Service by Harness - See Part Catalog
Description: 16-Way M (BK)

Terminal Part Information

Terminated Lead: Service by Harness - See Part Catalog
Release Tool: Service by Harness - See Part Catalog
Diagnostic Test Probe: Pending

X450 Body Harness to Rear Fascia Harness (with UD5)

Pin	Size	Colour	Circuit	Option	Function	Pin	Size	Colour	Circuit	Option
1	0.5	L-GN/WH	1324	--	Reverse Lamp Supply Voltage	1	0.5	L-GN/WH	1324	-
2	0.5	L-GN/YE	6846	-	Rear Number Plate Lamp Supply Voltage	2	0.5	L-GN/YE	6846	--
3	0.5	VT/L-GN	439	-	Run/Crank Ignition 1 Voltage	3	0.5	VT/L-GN	439	-
4	0.5	RD/VT	5974	-	Park Assist Sensor Supply Voltage Park	4	0.5	RD/VT	5974	—
5	0.5	YE	2375	-	Left Rear Corner Object Sensor Signal	5	0.5	YE	2375	--
6	0.5	YE/L-BU	2376	-	Left Rear Middle Object Sensor Signal	6	0.5	YE/L-BU	2376	--
7	0.5	YE/WH	2377	-	Right Rear Middle Object Sensor Signal	7	0.5	YE/WH	2377	--
8	--	--	--	--	Not Available	8	--	--	--	--
9	0.5	BK/GY	2379	-	Low Reference	9	0.5	BK/GY	2379	--
10	0.5	BK	6974	-	Camera Drain Wire	10	0.5	BK	6974	--
11	0.5	GY/YE	6972	-	Camera Signal #2 +	11	0.5	GY/YE	6972	-
12	0.5	WH/L-BU	6973	-	Camera Signal #2	12	0.5	WH/L-BU	6973	--
13	--	--	--	--	Not Used	13	--	--	--	--
14	0.5	BK	850	--	Ground	14	0.5	BK	850	--
15	0.5	BK	650	--	Ground	15	0.5	BK	650	--
16	0.5	YE/VT	2378	-	Right Rear Corner Object Sensor Signal	16	0.5	YE/VT	2378	-

© Copyright Chevrolet. All rights reserved

X451 Body Harness to Rear Fascia Harness (without UD5)

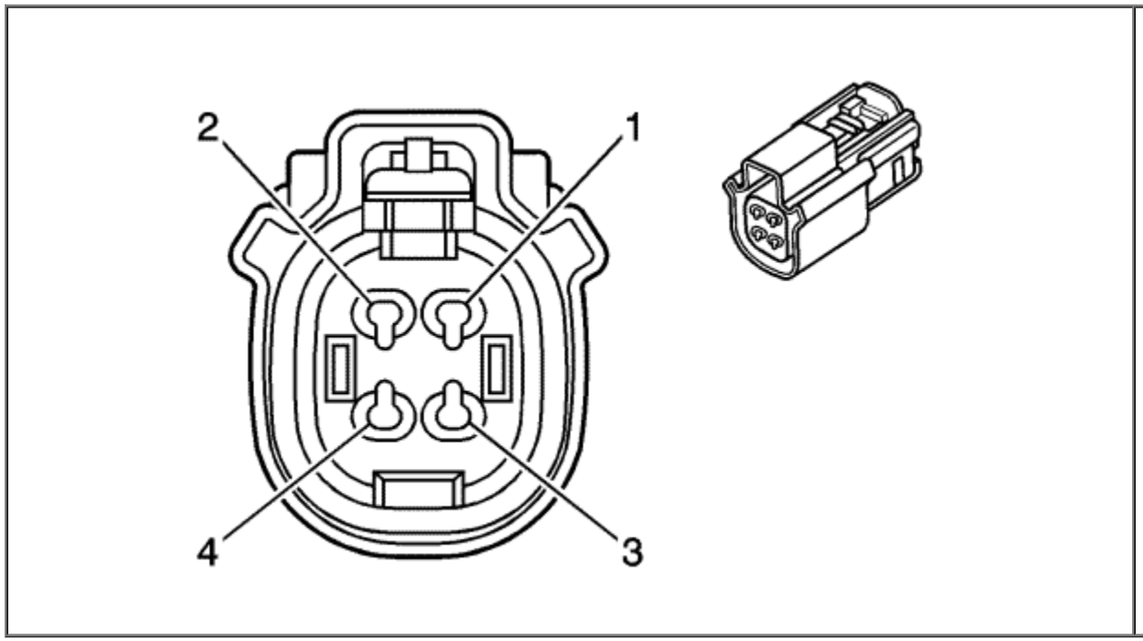

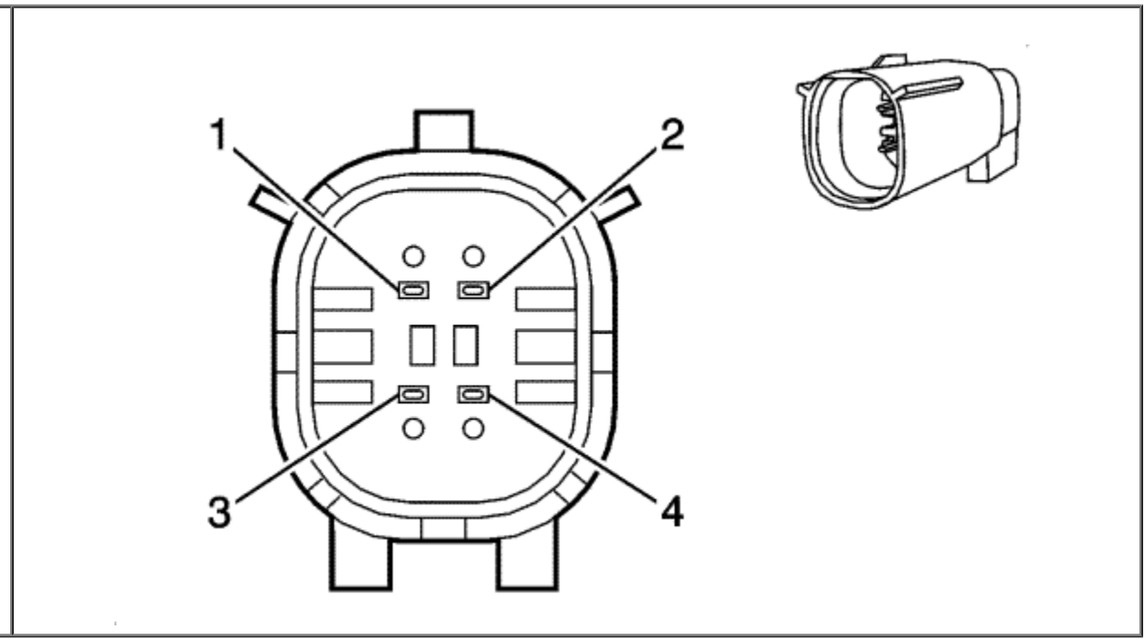

Connector Part Information

Harness Type: Body
OEM Connector: 33472-0406
Service Connector: 13580927
Description: 4-Way F MX150 Series, Sealed (BK)

Terminal Part Information

Terminated Lead: Service by Connector Assembly - Pending
Release Tool: J-38125-217
Diagnostic Test Probe: J-35616-14 (GN)

Connector Part Information

Harness Type: Rear Fascia
OEM Connector: 33482-0401
Service Connector: Service by Harness - See Part Catalog
Description: 4-Way M MX150 Series, Sealed (BK)

Terminal Part Information

Terminated Lead: Service by Harness - See Part Catalog
Release Tool: J-38125-217
Diagnostic Test Probe: J-35616-3 (GY)

X451 Body Harness to Rear Fascia Harness (without UD5)

Pin	Size	Colour	Circuit	Option	Function	Pin	Size	Colour	Circuit	Option
1	0.5	L-GN/WH	1324	--	Reverse Lamp Supply Voltage	1	0.5	L-GN/WH	1324	-
2	0.5	L-GN/YE	6846	-	Rear Number Plate Lamp Supply Voltage	2	0.5	L-GN/YE	6846	--
3	--	--	--	--	Not Used	3	--	--	--	--
4	0.5	BK	650	--	Ground	4	0.5	BK	650	-

© Copyright Chevrolet. All rights reserved

X500 Driver Door Harness to Body Harness

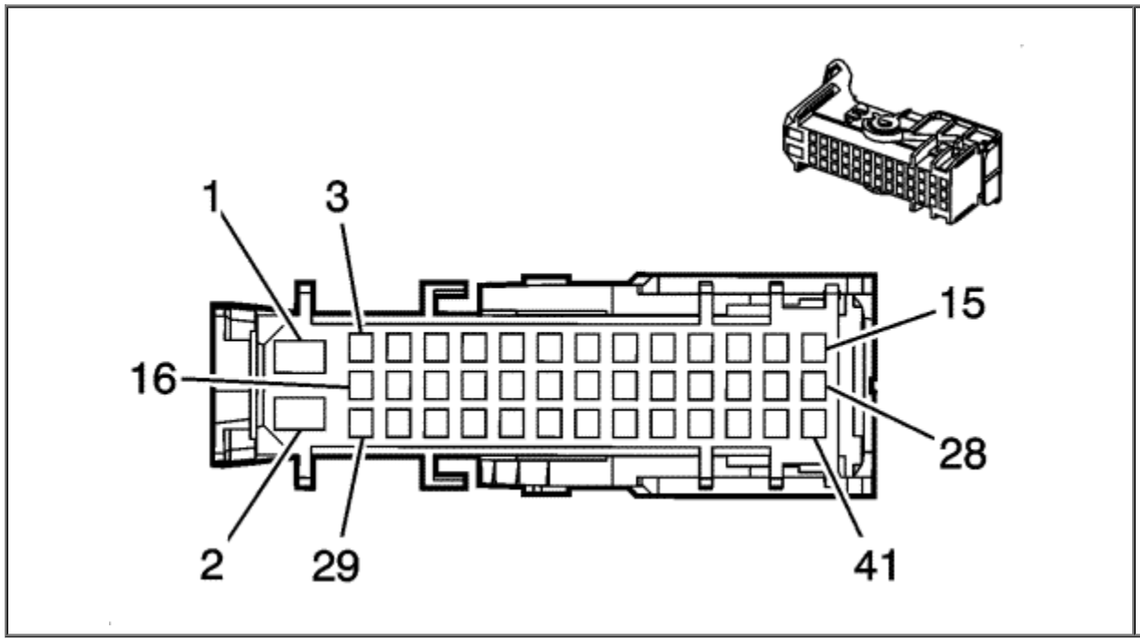

Connector Part Information

Harness Type: Driver Door
OEM Connector: 13678795
Service Connector: Service by Harness - See Part Catalog
Description: 41-Way F (GY)

Terminal Part Information

Pins: 1, 2
Terminated Lead: 13575858
Release Tool: J-38125-36
Diagnostic Test Probe: J-35616-42 (RD)

Pins: 6-13, 15, 21, 30-36, 38-41

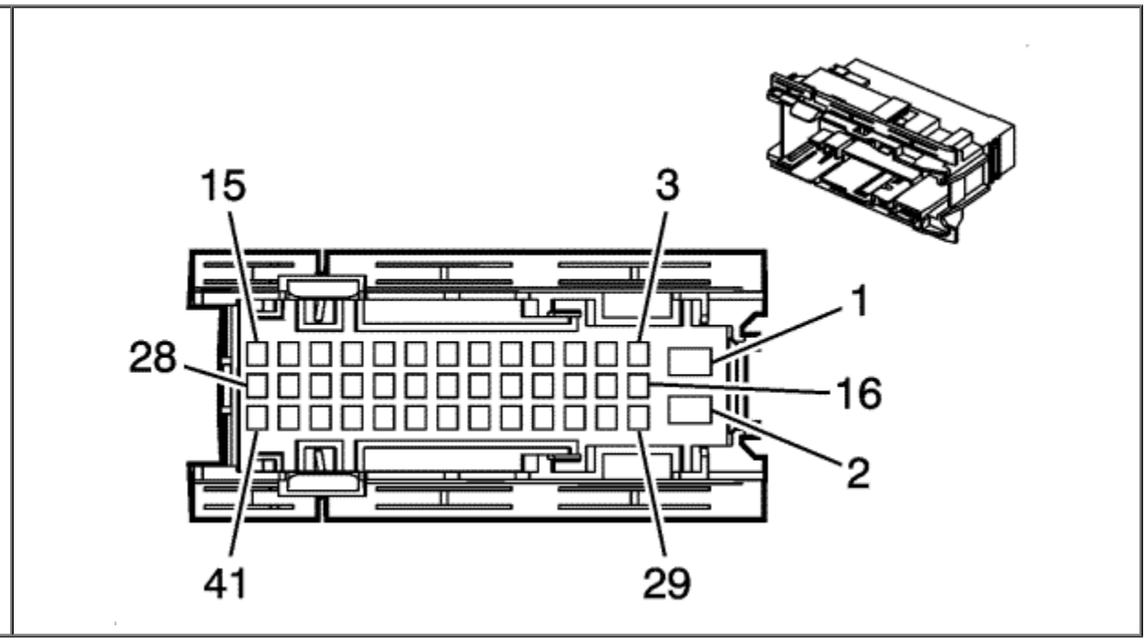

Connector Part Information

Harness Type: Body
OEM Connector: 13678799
Service Connector: 13577517
Description: 41-Way M (GY)

Terminal Part Information

Pins: 1, 2
Terminated Lead: 13575857
Release Tool: J-38125-36
Diagnostic Test Probe: Pending

Pins: 6-13, 15, 21, 30-36, 38-41

Terminated Lead: Pins 6-8, 13, 40, 41 - 13575539
Terminated Lead: Pins 9-12, 15, 21, 30-36, 38, 39 - 13575538
Release Tool: J-38125-560
Diagnostic Test Probe: J-35616-14 (GN)

Terminated Lead: Pins 9-11, 15, 31-36 - 13575775
Terminated Lead: Pins 6-8, 12, 13, 21, 30, 38-41 - 13575776
Release Tool: J-38125-560
Diagnostic Test Probe: J-35616-14 (GN)

X500 Driver Door Harness to Body Harness

Pin	Size	Colour	Circuit	Option	Function	Pin	Size	Colour	Circuit	Option
1	2.5	RD/BN	3640	-	Battery Positive Voltage	1	2	RD/BN	3640	-
2	2.5	BK	1550	--	Ground	2	2.5	BK	1550	--
3-5	--	--	--	--	Not Used	3-5	--	--	--	--
6	0.75	BN/YE	294	-	Door Lock Actuator Unlock Control	6	0.75	BN/YE	294	-
7	0.75	GY	5911	-	Door Lock Actuator Lock Control 2	7	0.75	GY	5911	--
8	0.75	BN/YE	2267	-	Mirror Heating Element Supply Voltage	8	0.75	BN/YE	2267	--
9	0.5	BN/WH	1498	-	Right Mirror Motor-Up Control	9	0.35	BN/WH	1498	--
10	0.5	L-BU	881	-	Right Mirror Motor Right Control	10	0.35	L-BU	881	--
11	0.5	YE/WH	330	-	Right Mirror Motor Supply Voltage	11	0.35	YE/WH	330	--
12	0.5	YE	6817	-	LED Backlight Dimming Control	12	0.5	YE	6817	--
13	0.75	L-BU/WH	1314	-	Left Front Indicator Lamp Supply Voltage	13	0.5	L-BU/WH	1314	--
14	--	--	--	--	Not Used	14	--	--	--	--
15	0.5	RD/WH	4740	--	Battery Positive Voltage	15	0.35	RD/WH	4740	-
16-20	--	--	--	--	Not Used	16-20	--	--	--	--
21	0.5	L-GN/YE	6134	-	Linear Interconnect Network Bus 3	21	0.5	L-GN/YE	6134	-
22-29	--	--	--	--	Not Used	22-29	--	--	--	--
30	0.5	BK	1550	--	Ground	30	0.5	BK	1550	--
31	0.5	BN/WH	3827	-	Refuel Request Switch Signal	31	0.35	BN/WH	3827	--
32	0.5	GY/WH	1447	-	Fuel Door Release Switch Signal	32	0.35	GY/WH	1447	--
33	0.5	BK/L-BU	3828	-	Low Reference	33	0.35	BK/L-BU	3828	--
34	0.5	BN/YE	3698	-	Charge Port Door Switch Wake-up Signal	34	0.35	BN/YE	3698	-
35	0.5	VT/BN	3699	-	Charge Port Door Switch Signal	35	0.35	VT/BN	3699	--
36	0.5	BK/GY	718	-	Low Reference	36	0.35	BK/GY	718	-
37	--	--	--	--	Not Used	37	--	--	--	--
38	0.5	L-GN/WH	2132	-	Left Front Side Impact Sensing Module Signal	38	0.5	L-GN/WH	2132	--
39	0.5	L-GN	6628	-	Low Reference	39	0.5	L-GN	6628	-

40	0.75	L-BU	201	-	Left Front Speaker (+) (1)	40	1.5	L-BU	201	-
41	0.75	BN/L-BU	118	-	Left Front Speaker Signal (-) (1)	41	1.5	BN/L-BU	118	-

© Copyright Chevrolet. All rights reserved

X505 Driver Door Harness to Driver Door Trim Harness

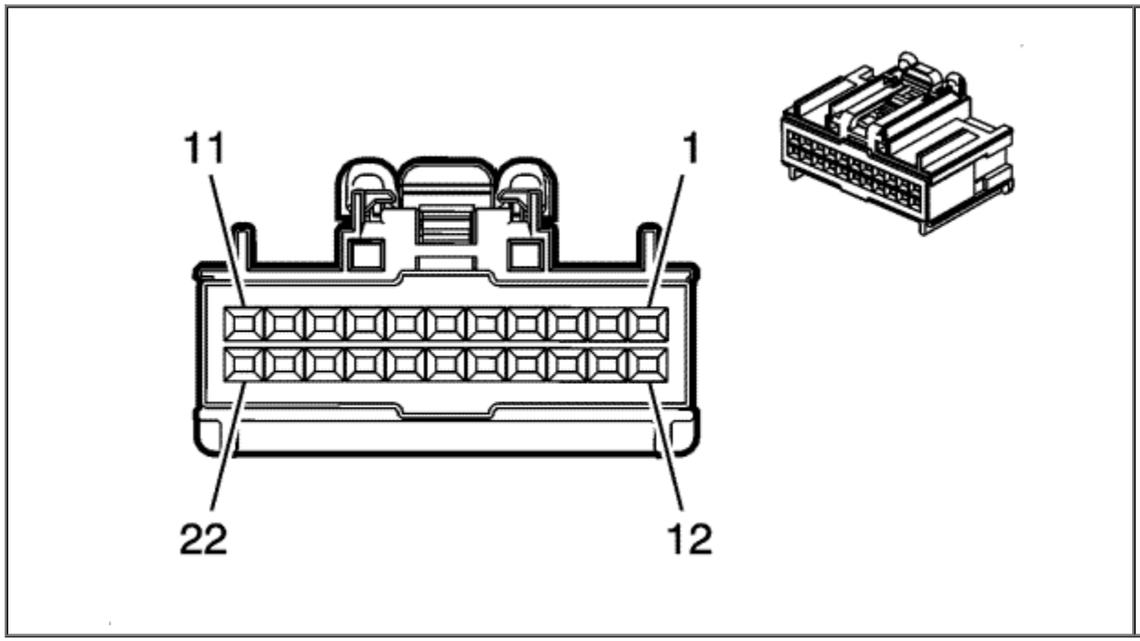

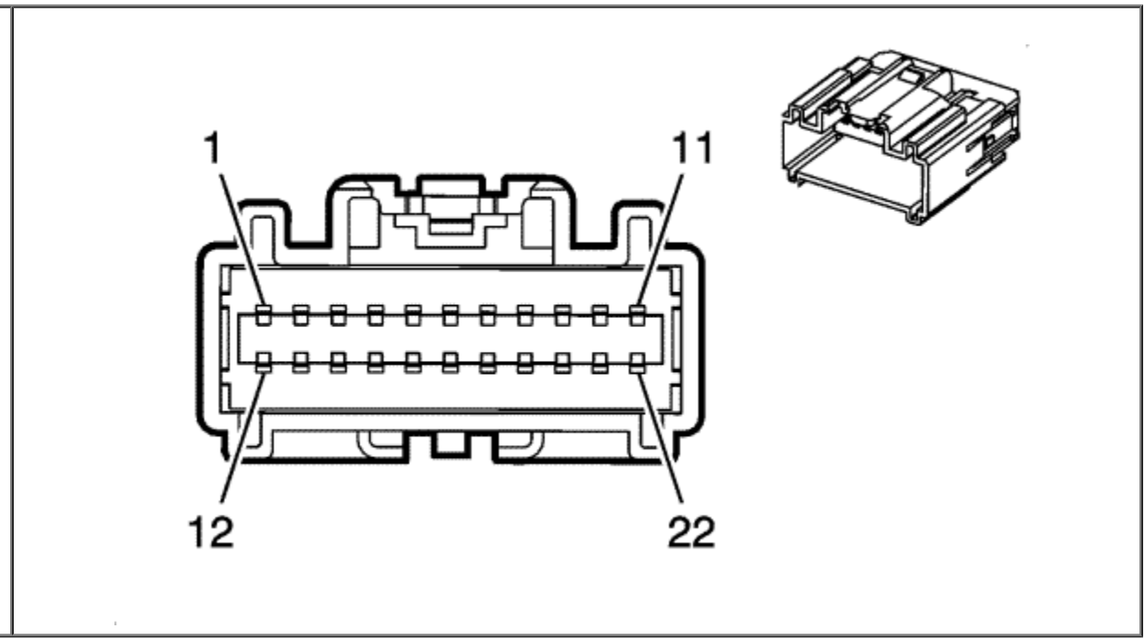

Connector Part Information

Harness Type: Driver Door
OEM Connector: 0-1420011-3
Service Connector: Service by Harness - See Part Catalog
Description: 22-Way F GET 0.64 Series (NA)

Terminal Part Information

Terminated Lead: 13578815
Release Tool: J-38125-553
Diagnostic Test Probe: J-35616-64B (L-BU)

Connector Part Information

Harness Type: Driver Door Trim
OEM Connector: 2-1419158-6
Service Connector: Service by Harness - See Part Catalog
Description: 22-Way M GET 0.64 Series (NA)

Terminal Part Information

Terminated Lead: Service by Harness - See Part Catalog
Release Tool: Service by Harness - See Part Catalog
Release Tool: J-38125-553

X505 Driver Door Harness to Driver Door Trim Harness

Pin	Size	Colour	Circuit	Option	Function	Pin	Size	Colour	Circuit	Option
1	0.5	RD/WH	4740	-	Battery Positive Voltage	1	0.35	RD/WH	4740	--
2	0.35	GY/VT	329	-	Left Mirror Motor Supply Voltage	2	0.35	GY/VT	329	--
3	0.35	YE/L-GN	88	--	Left Mirror Motor Up Control	3	0.35	YE/L-GN	88	--
4	0.35	L-GN	81	--	Left Mirror Motor Right Control	4	0.35	L-GN	81	--
5	0.5	YE/WH	330	-	Right Mirror Motor Supply Voltage	5	0.35	YE/WH	330	--
6	0.5	BN/WH	1498	-	Right Mirror Motor-Up Control	6	0.35	BN/WH	1498	--
7	0.5	L-BU	881	-	Right Mirror Motor Right Control	7	0.35	L-BU	881	--
8	0.5	BK/GY	718	-	Low Reference	8	0.35	BK/GY	718	--
9	0.5	VT/BN	3699	-	Charge Port Door Switch Signal	9	0.35	VT/BN	3699	--
10	0.5	BN/YE	3698	-	Charge Port Door Switch Wake-up Signal	10	0.35	BN/YE	3698	--
11	0.5	YE	6817	-	LED Backlight Dimming Control	11	0.5	YE	6817	--
12	0.5	BK/L-BU	3828	-	Low Reference	12	0.5	BK/L-BU	3828	-
13	0.5	GY/WH	1447	-	Fuel Door Release Switch Signal	13	0.5	GY/WH	1447	-
14	0.5	BN/WH	3827	-	Refuel Request Switch Signal	14	0.5	BN/WH	3827	-
15	0.35	L-GN	3381	-	Power Window Switch Driver Express Signal	15	0.35	L-GN	3381	--
16	0.35	GY	3380	-	Power Window Switch Driver Down Signal	16	0.35	GY	3380	-
17	0.35	L-GN/WH	3379	-	Power Window Switch Driver Up Signal	17	0.35	L-GN/WH	3379	--
18	0.5	L-GN/YE	6134	-	Linear Interconnect Network Bus 3	18	0.5	L-GN/YE	6134	-
19	--	--	--	--	Not Used	19	--	--	--	--
20	0.35	BK	1550	--	Ground	20	0.35	BK	1550	--
21	0.35	BN/L-GN	3270	-	Driver Door Lock Motor Status Control	21	0.35	BN/L-GN	3270	-
22	0.35	BN/L-GN	1124	-	Door Lock Key Switch Unlock Signal	22	0.35	BN/L-GN	1124	-

© Copyright Chevrolet. All rights reserved

X510 Outside Rear-view Mirror - Driver to Driver's Door Harness

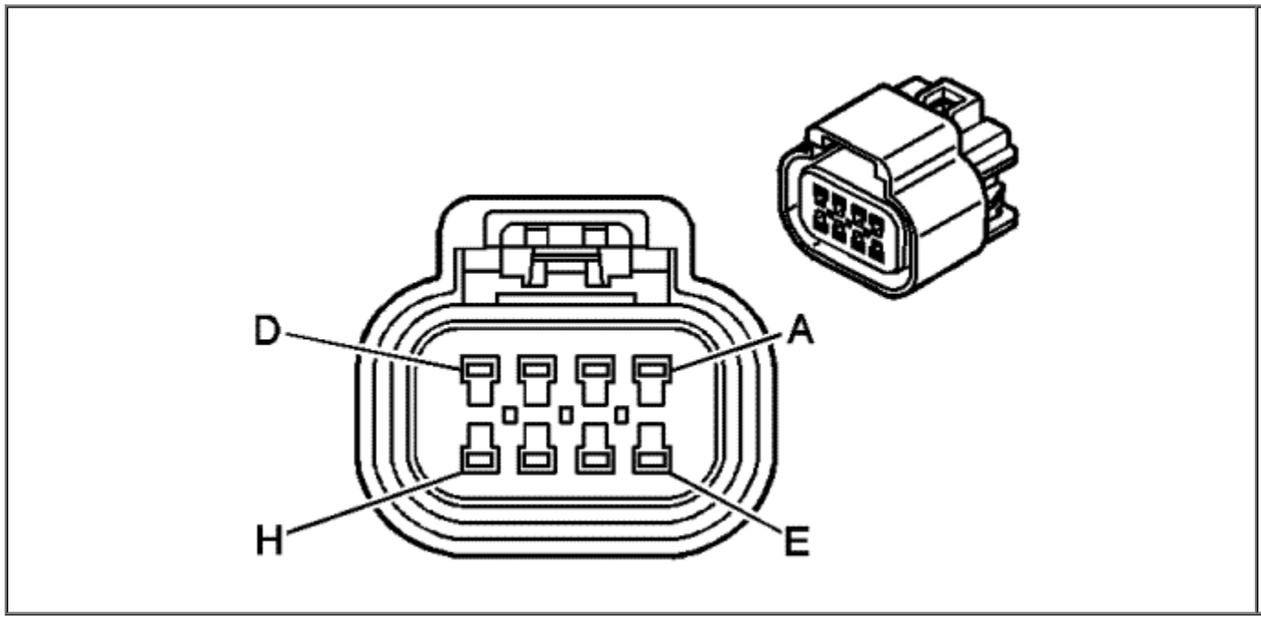

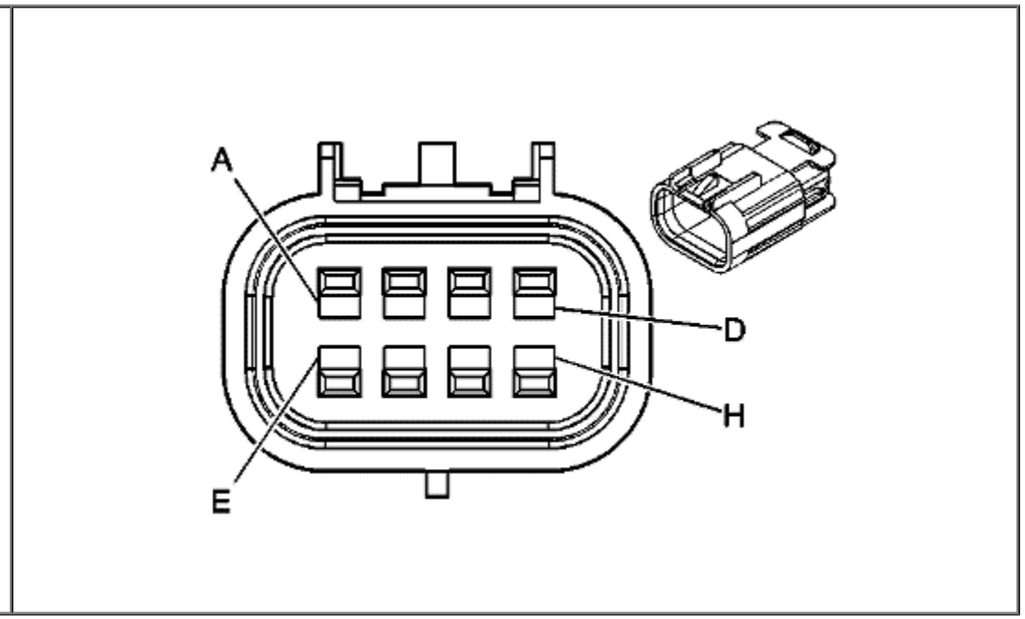

Connector Part Information

Harness Type: Outside Rearview Mirror - Driver
OEM Connector: 15326836
Service Connector: 88986255
Description: 8-Way F GT 150 Series, Sealed (BK)

Terminal Part Information

Terminated Lead: Service by Harness - See Part Catalog
Release Tool: J-38125-553
Diagnostic Test Probe: J-35616-64B (L-BU)

Connector Part Information

Harness Type: Driver Door
OEM Connector: 15326840
Service Connector: Service by Harness - See Part Catalog
Description: 8-Way M GT 150 Sealed 4.0 (BK)

Terminal Part Information

Terminated Lead: Pins B, G and H - 13576363
Terminated Lead: Pins A, D and F - 13576364
Terminated Lead: Pins C - 13575397
Release Tool: J-38125-553
Diagnostic Test Probe: J-35616-3 (GY)

X510 Outside Rear-view Mirror - Driver to Driver's Door Harness

Pin	Size	Colour	Circuit	Option	Function	Pin	Size	Colour	Circuit	Option
A	0.75	BN	1314	-	Left Front Indicator Lamp Supply Voltage	A	0.75	L-BU/WH	1314	-
B	0.35	D-BU/WH	88	--	Left Mirror Motor Up Control	B	0.35	YE/L-GN	88	-
C	0.5	BN	1550	--	Ground	C	0.5	BK	1550	--
D	0.75	BK	1550	--	Ground	D	0.75	BK	1550	--
E	--	--	--	--	Not Used	E	--	--	--	--
F	0.75	BK	2267	-	Mirror Heating Element Supply Voltage	F	0.75	BN/YE	2267	-
G	0.35	D-GN/WH	81	--	Left Mirror Motor Right Control	G	0.35	L-GN	81	--
H	0.35	WH	329	-	Left Mirror Motor Supply Voltage	H	0.35	GY/VT	329	-

© Copyright Chevrolet. All rights reserved

X600 Passenger Door Harness to Body Harness

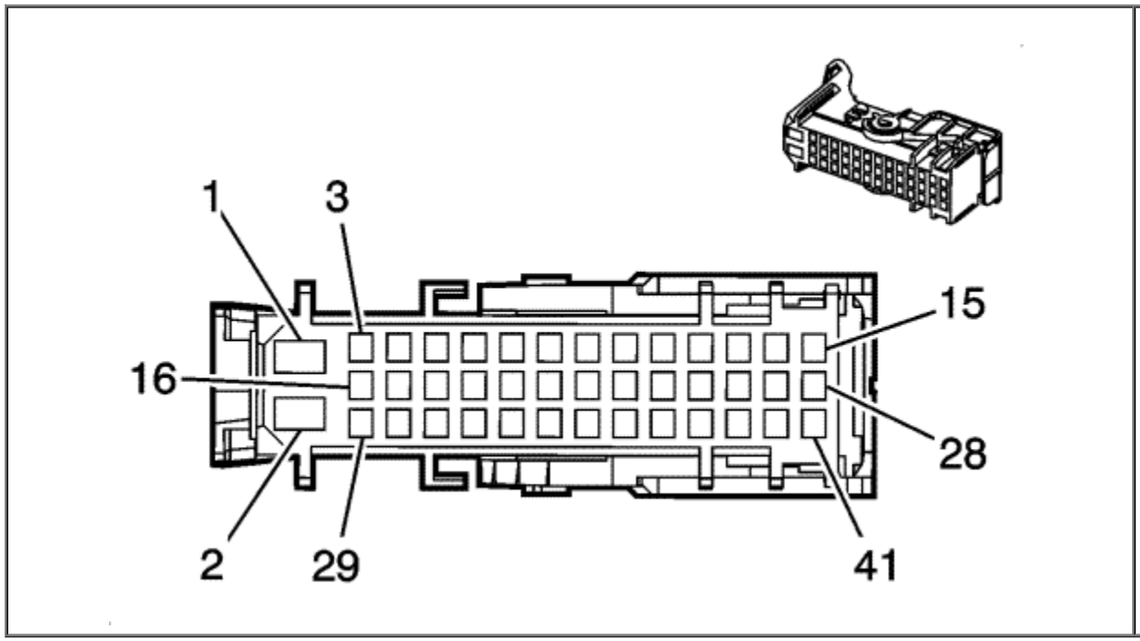

Connector Part Information

Harness Type: Passenger Door
OEM Connector: 13678795
Service Connector: Service by Harness - See Part Catalog
Description: 41-Way F (GY)

Terminal Part Information

Pins: 1, 2
Terminated Lead: 13575858
Release Tool: J-38125-36
Diagnostic Test Probe: J-35616-42 (RD)

Pins: 6-11, 13, 21, 30, 38-41

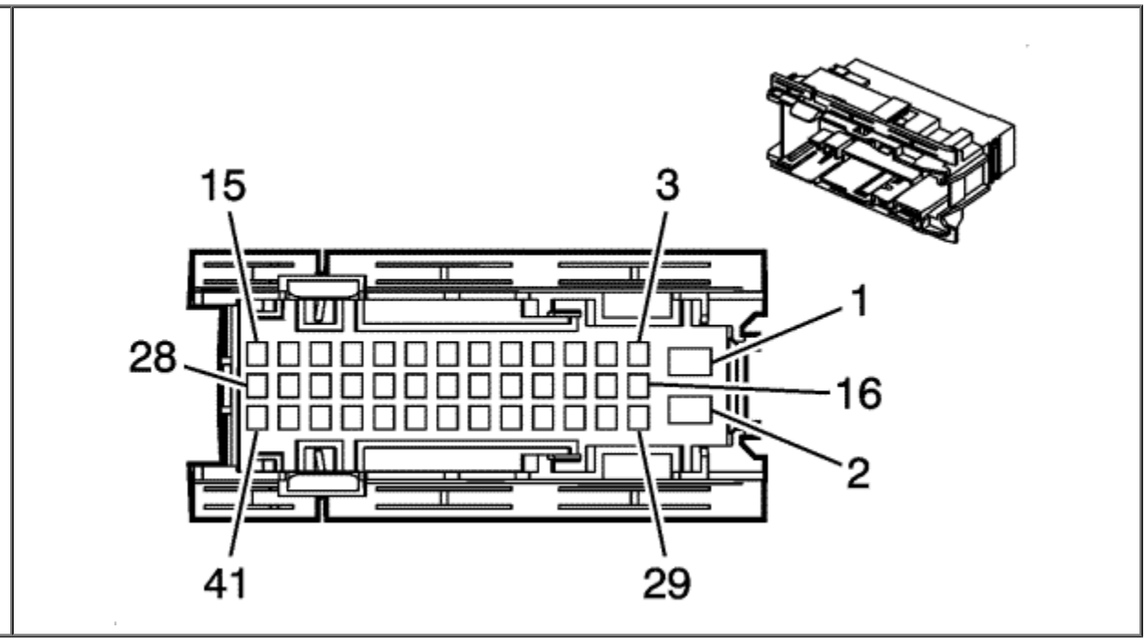

Connector Part Information

Harness Type: Body
OEM Connector: 13678799
Service Connector: 13577517
Description: 41-Way M (GY)

Terminal Part Information

Pins: 1, 2
Terminated Lead: 13575857
Release Tool: J-38125-36
Diagnostic Test Probe: Pending

Pins: 6-11, 13, 21, 30, 38-41

Terminated Lead: Pins 6-8, 13, 40, 41 - 13575539
Terminated Lead: Pins 9-11, 21, 30, 38, 39 - 13575538
Release Tool: J-38125-560
Diagnostic Test Probe: J-35616-14 (GN)

Terminated Lead: Pins 6-8, 13, 21, 38-41 - 13575776
Terminated Lead: Pins 9-11, 30 - 13575775
Release Tool: J-38125-560
Diagnostic Test Probe: J-35616-14 (GN)

X600 Passenger Door Harness to Body Harness

Pin	Size	Colour	Circuit	Option	Function	Pin	Size	Colour	Circuit	Option
1	2.5	RD/BN	3640	-	Battery Positive Voltage	1	2.5	RD/BN	3640	-
2	2.5	BK	2050	--	Ground	2	2.5	BK	2050	--
3-5	--	--	--	--	Not Used	3-5	--	--	--	--
6	0.75	BN/YE	294	-	Door Lock Actuator Unlock Control	6	0.75	BN/YE	294	-
7	0.75	GY	295	-	Door Lock Actuator Lock Control	7	0.75	GY	295	--
8	0.75	BN/YE	2267	-	Mirror Heating Element Supply Voltage	8	0.75	BN/YE	2267	--
9	0.5	BN/WH	1498	-	Right Mirror Motor-Up Control	9	0.35	BN/WH	1498	--
10	0.5	L-BU	881	-	Right Mirror Motor Right Control	10	0.35	L-BU	881	--
11	0.5	YE/WH	330	-	Right Mirror Motor Supply Voltage	11	0.35	YE/WH	330	-
12	--	--	--	--	Not Used	12	--	--	--	--
13	0.75	L-GN/VT	1315	-	Right Front Indicator Lamp Supply Voltage	13	0.5	L-GN/VT	1315	-
14-20	--	--	--	--	Not Used	14-20	--	--	--	-
21	0.5	L-GN/YE	6134	-	Linear Interconnect Network Bus 3	21	0.5	L-GN/YE	6134	-
22-29	--	--	--	--	Not Used	22-29	--	--	--	--
30	0.5	BK	2050	--	Ground	30	0.35	BK	2050	--
31-37	--	--	--	--	Not Used	31-37	--	--	--	--
38	0.5	BN/OG	2134	-	Right Front Side Impact Sensing Module Signal	38	0.5	BN/OG	2134	--
39	0.5	BN/WH	6629	-	Low Reference	39	0.5	BN/WH	6629	-
40	0.75	YE	200	-	Right Front Speaker (+) (1)	40	1	YE	200	-
41	0.75	BN/YE	117	-	Right Front Speaker Signal (-) (1)	41	0.75	BN/YE	117	-

© Copyright Chevrolet. All rights reserved

X610 Outside Rear-view Mirror - Passenger to Passenger Door Harness

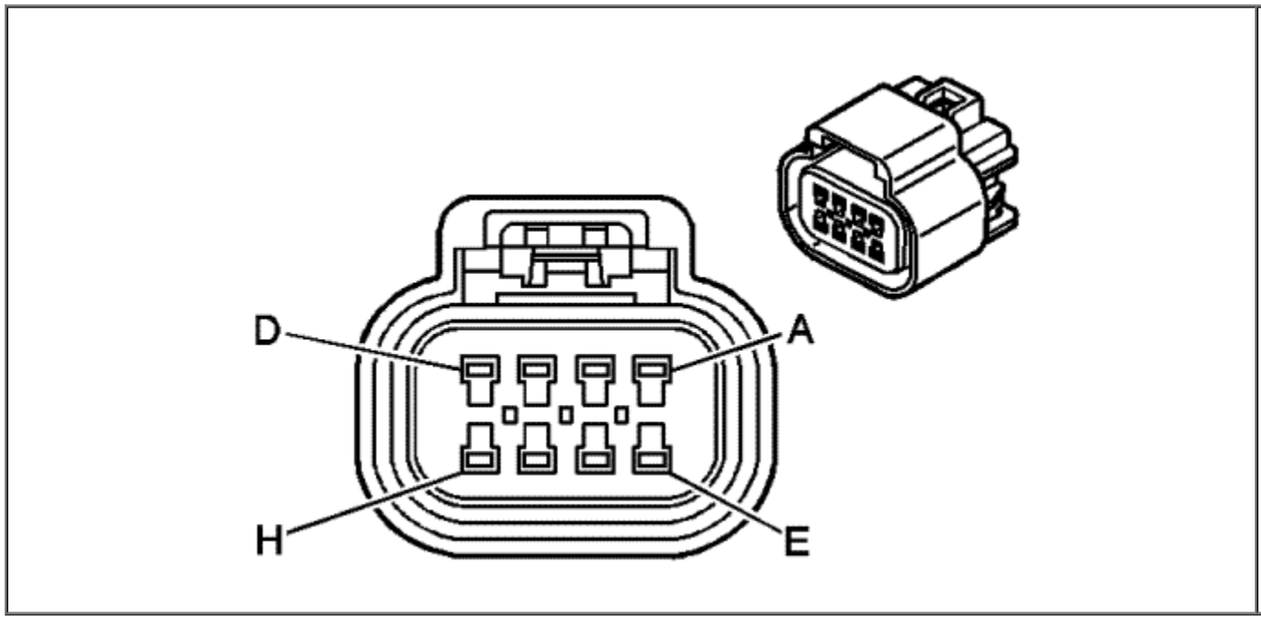

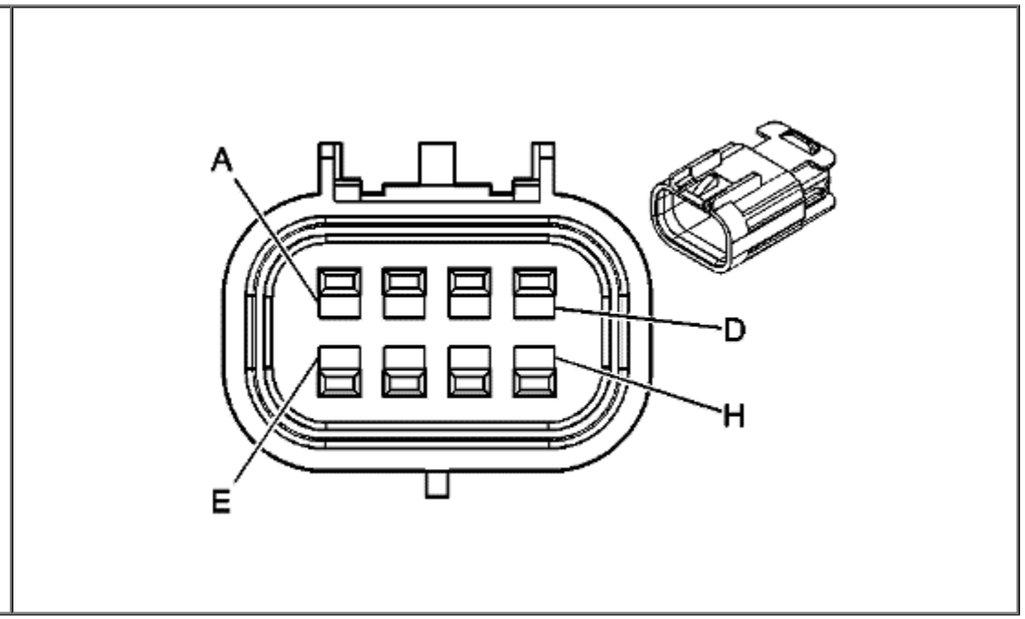

Connector Part Information

Harness Type: Oustside Rear-view Mirror
OEM Connector: 15326836
Service Connector: 88986255
Description: 8-Way F GT 150 Series, Sealed (BK)

Terminal Part Information

Terminated Lead: Service by Harness - See Part Catalog
Release Tool: J-38125-553
Diagnostic Test Probe: J-35616-64B (L-BU)

Connector Part Information

Harness Type: Passenger Door
OEM Connector: 15326840
Service Connector: Service by Harness - See Part Catalog
Description: 8-Way M GT 150 Sealed 4.0 (BK)

Terminal Part Information

Terminated Lead: Pins B, C, G and H - 13575397
Terminated Lead: Pins D-F - 13576364
Release Tool: J-38125-553
Diagnostic Test Probe: J-35616-3 (GY)

X610 Outside Rear-view Mirror - Passenger to Passenger Door Harness

Pin	Size	Colour	Circuit	Option	Function	Pin	Size	Colour	Circuit	Option
A	--	--	--	--	Not Used	A	--	--	--	--
B	0.5	D-BU/WH	1498	-	Right Mirror Motor-Up Control	B	0.5	BN/WH	1498	-
C	0.5	BN/BK	2050	--	Ground	C	0.5	BK	2050	--
D	0.75	BN	1315	-	Right Front Indicator Lamp Supply Voltage	D	0.75	L-GN/VT	1315	-
E	0.75	BK	2050	--	Ground	E	0.75	BK	2050	--
F	0.75	BK	2267	-	Mirror Heating Element Supply Voltage	F	0.75	BN/YE	2267	-
G	0.5	D-GN/WH	881	-	Right Mirror Motor Right Control	G	0.5	L-BU	881	--
H	0.5	WH	330	-	Right Mirror Motor Supply Voltage	H	0.5	YE/WH	330	-

© Copyright Chevrolet. All rights reserved

X700 Left Rear Door Harness to Body Harness

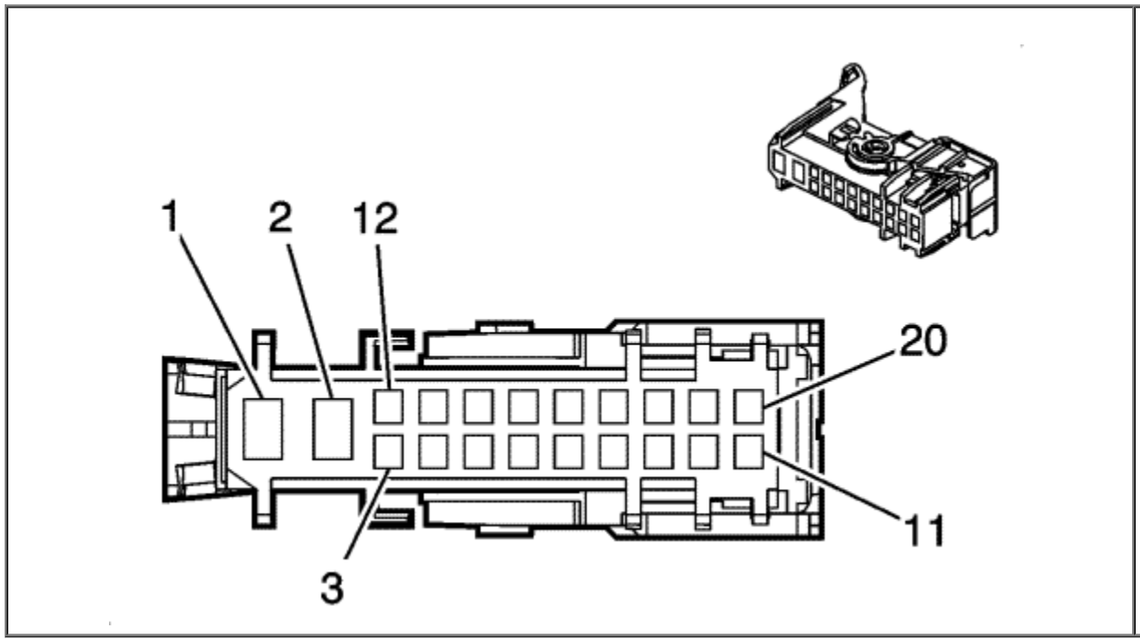

Connector Part Information

Harness Type: Left Rear Door
OEM Connector: 13678789
Service Connector: Service by Harness - See Part Catalog
Description: 20-Way F (GY)

Terminal Part Information

Pins: 1
Terminated Lead: 13575858
Release Tool: J-38125-36
Diagnostic Test Probe: J-35616-42 (RD)

Pins: 2

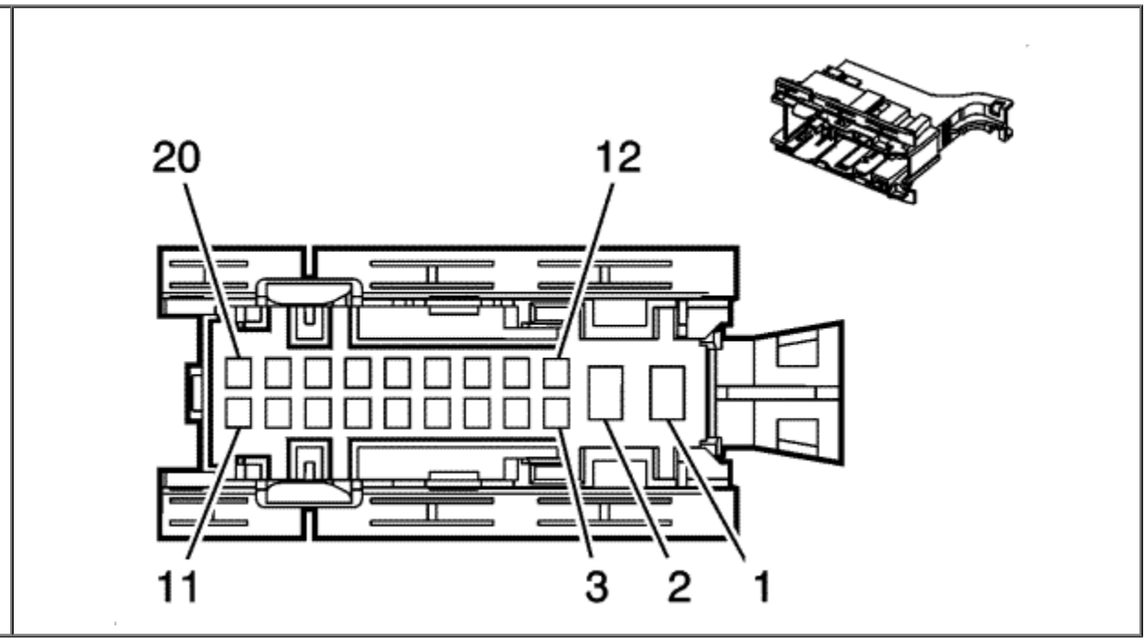

Connector Part Information

Harness Type: Body
OEM Connector: 13680032
Service Connector: 13577518
Description: 20-Way M 1.5 2.8 DSQ Series (GY)

Terminal Part Information

Pins: 1, 2
Terminated Lead: Pending
Release Tool: J-38125-36

Terminated Lead: Service by Harness - See Part Catalog
Release Tool: J-38125-36
Diagnostic Test Probe: J-35616-42 (RD)

Pins: 3-6, 8, 10, 17-20
Terminated Lead: Pins 3, 8, 10, 17, 18 - 13575538
Terminated Lead: Pins 4-6, 19, 20 - 13575539
Release Tool: J-38125-560
Diagnostic Test Probe: J-35616-14 (GN)

Diagnostic Test Probe: NA

Pins: 3-6, 8, 10, 17-20
Terminated Lead: Pins 4-6, 10, 17-20 - 13575776
Terminated Lead: Pins 3, 8 - 13575775
Release Tool: J-38125-560
Diagnostic Test Probe: J-35616-14 (GN)

X700 Left Rear Door Harness to Body Harness

Pin	Size	Colour	Circuit	Option	Function	Pin	Size	Colour	Circuit	Option
1	2.5	RD/YE	3740	-	Battery Positive Voltage	1	2	RD/YE	3740	-
2	2.5	BK	650	--	Ground	2	2.5	BK	650	--
3	0.5	BK	650	--	Ground	3	0.35	BK	650	-
4	0.75	GY	295	-	Door Lock Actuator Lock Control	4	0.75	GY	295	--
5	0.75	BN/YE	294	-	Door Lock Actuator Unlock Control	5	0.75	BN/YE	294	-
6	0.75	WH/L-BU	3266	-	Child Security Lock Motor Unlock Control	6	0.75	WH/L-BU	3266	-
7	--	--	--	--	Not Used	7	--	--	--	--
8	0.5	BN/WH	3269	-	Child Security Lock Motor Status Signal Left Rear	8	0.35	BN/WH	3269	-
9	--	--	--	--	Not Used	9	--	--	--	--
10	0.5	L-GN/GY	6135	-	Linear Interconnect Network Bus 4	10	0.5	L-GN/GY	6135	-
11-16	--	--	--	--	Not Used	11-16	--	--	--	--
17	0.5	OG/L-BU	6620	-	Left Middle Side Impact Sensing Module Signal	17	0.5	OG/L-BU	6620	--
18	0.5	L-BU	6621	-	Low Reference	18	0.5	L-BU	6621	--
19	0.75	L-GN	199	-	Left Rear Speaker (+)	19	0.75	L-GN	199	--
20	0.75	BN/L-GN	116	-	Left Rear Speaker Signal (-)	20	0.75	BN/L-GN	116	-

© Copyright Chevrolet. All rights reserved

X800 Right Rear Door Harness to Body Harness

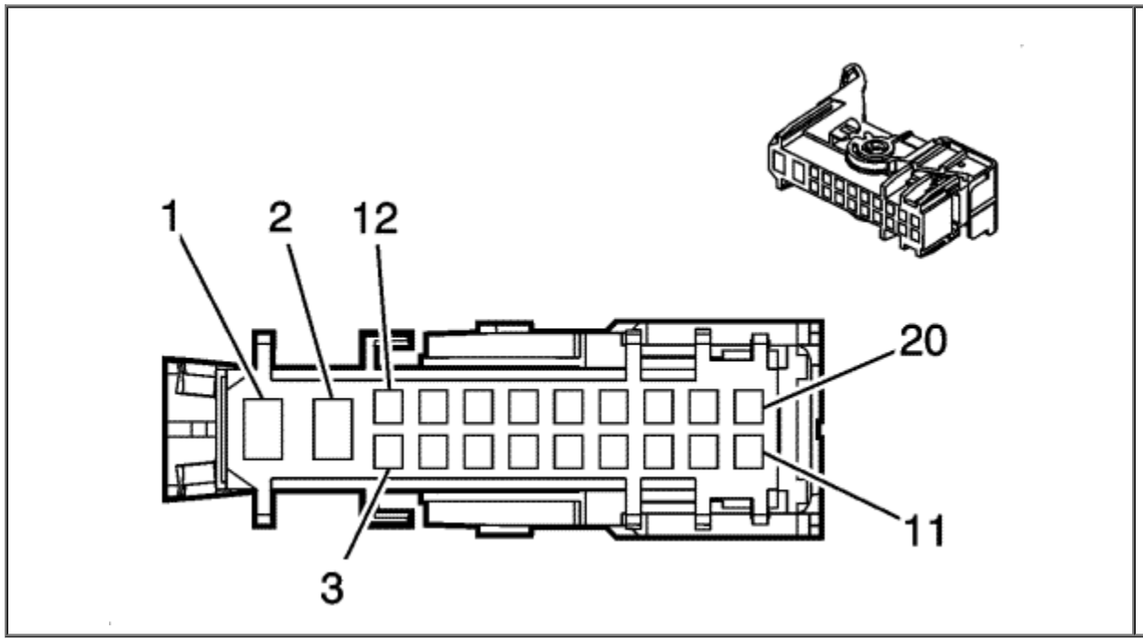

Connector Part Information

Harness Type: Right Rear Door
OEM Connector: 13678789
Service Connector: Service by Harness - See Part Catalog
Description: 20-Way F (GY)

Terminal Part Information

Pins: 1, 2
Terminated Lead: 13575858
Release Tool: J-38125-36
Diagnostic Test Probe: J-35616-42 (RD)

Pins: 3-6, 8, 10, 17-20

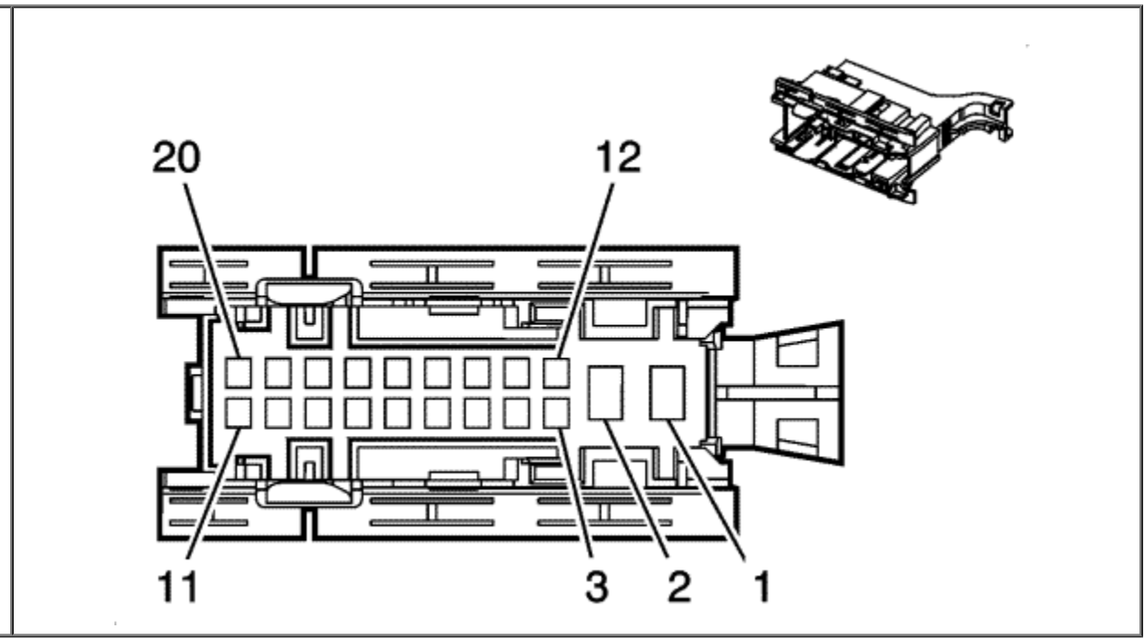

Connector Part Information

Harness Type: Body
OEM Connector: 13680032
Service Connector: 13577518
Description: 20-Way M 1.5 2.8 DSQ Series (GY)

Terminal Part Information

Pins: 1, 2
Terminated Lead: Pending
Release Tool: J-38125-36
Diagnostic Test Probe: NA

Pins: 3-6, 8, 10, 17-20

Terminated Lead: Pins 4-6, 19, 20 - 13575539
Terminated Lead: Pins 3, 8, 10, 17, 18 - 13575538
Release Tool: J-38125-560
Diagnostic Test Probe: J-35616-14 (GN)

Terminated Lead: Pins 3, 8 - 13575775
Terminated Lead: Pins 4-6, 10, 17-20 - 13575776
Release Tool: J-38125-560
Diagnostic Test Probe: J-35616-14 (GN)

X800 Right Rear Door Harness to Body Harness

Pin	Size	Colour	Circuit	Option	Function	Pin	Size	Colour	Circuit	Option
1	2.5	RD/YE	3740	-	Battery Positive Voltage	1	2	RD/YE	3740	-
2	2.5	BK	850	--	Ground	2	2.5	BK	850	--
3	0.5	BK	1450	--	Ground	3	0.35	BK	1450	-
4	0.75	GY	295	-	Door Lock Actuator Lock Control	4	0.75	GY	295	--
5	0.75	BN/YE	294	-	Door Lock Actuator Unlock Control	5	0.75	BN/YE	294	-
6	0.75	WH/L-BU	3266	-	Child Security Lock Motor Unlock Control	6	0.75	WH/L-BU	3266	-
7	--	--	--	--	Not Used	7	--	--	--	--
8	0.5	GY/BK	3268	-	Child Security Lock Motor Status Signal Right Rear	8	0.35	GY/BK	3268	-
9	--	--	--	--	Not Used	9	--	--	--	--
10	0.5	L-GN/GY	6135	-	Linear Interconnect Network Bus 4	10	0.5	L-GN/GY	6135	-
11-16	--	--	--	--	Not Used	11-16	--	--	--	--
17	0.5	OG/VT	6624	-	Right Middle Side Impact Sensing Module Signal	17	0.5	OG/VT	6624	--
18	0.5	BK/OG	6625	-	Low Reference	18	0.5	BK/OG	6625	--
19	0.75	WH	46	--	Right Rear Speaker (+)	19	0.75	WH	46	--
20	0.75	WH/BN	115	-	Right Rear Speaker Signal (-)	20	0.75	WH/BN	115	-

© Copyright Chevrolet. All rights reserved

X900 Liftgate Jumper Harness to Body Harness

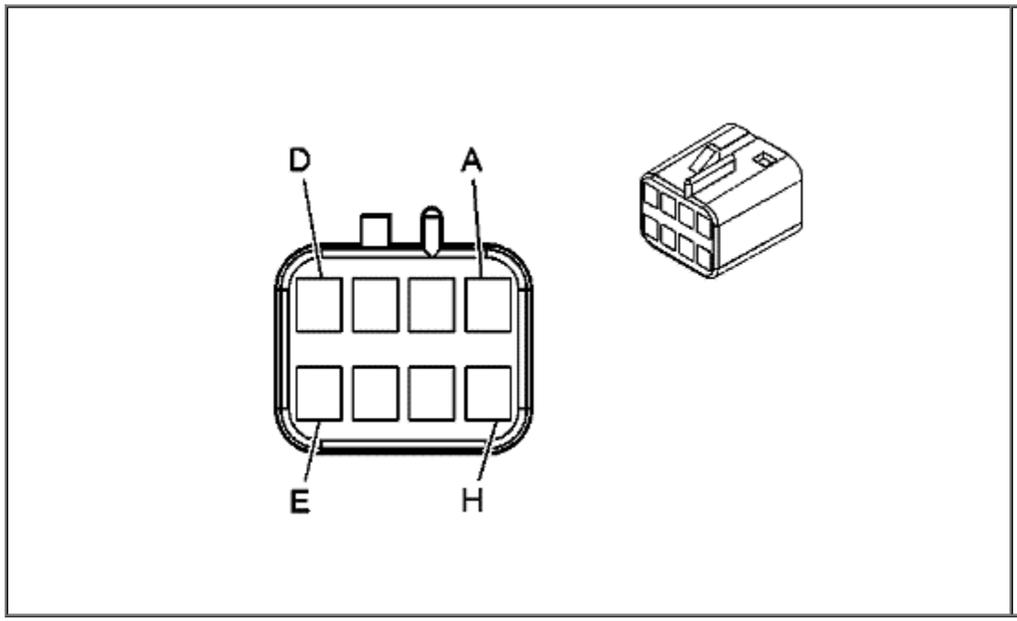

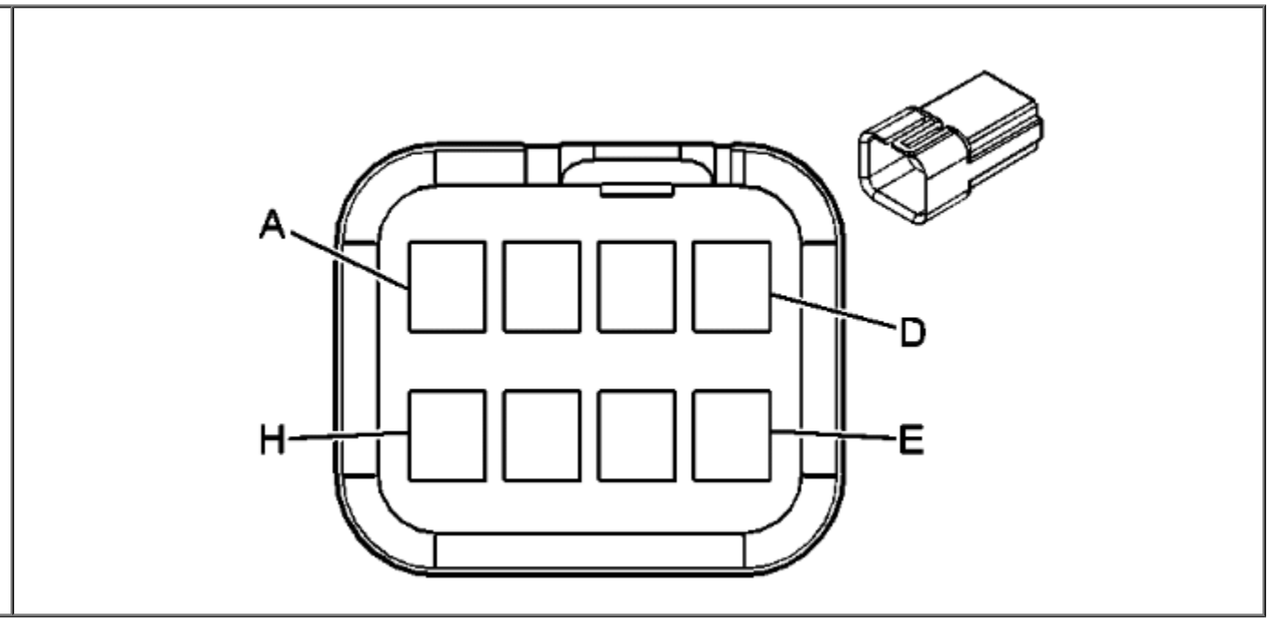

Connector Part Information

Harness Type: Tailgate Jumper
OEM Connector: 12047886
Service Connector: 12101822
Description: 8-Way F Metri-Pack 150 Series (BK)

Terminal Part Information

Pins: A, G
Terminated Lead: Service by Harness - See Part Catalog
Release Tool: J-38125-12A
Diagnostic Test Probe: J-35616-14 (GN)

Pins: B-F
Terminated Lead: Service by Harness - See Part Catalog

Connector Part Information

Harness Type: Body
OEM Connector: 12045688
Service Connector: 12101827
Description: 8-Way M Metri-Pack 150 Series (BK)

Terminal Part Information

Terminated Lead: Service by Connector Assembly - 12101827
Release Tool: J-38125-12A
Diagnostic Test Probe: J-35616-3 (GY)

Release Tool: J-38125-12A
Diagnostic Test Probe: J-35616-14 (GN)

X900 Liftgate Jumper Harness to Body Harness

Pin	Size	Colour	Circuit	Option	Function	Pin	Size	Colour	Circuit	Option
A	0.75	BN/VT	293	-	Rear Defog Element Supply Voltage	A	0.75	BN/VT	293	-
B	0.5	YE/L-BU	5797	-	Rear Closure Handle Switch Open Signal	B	0.35	YE/L-BU	5797	-
C	0.5	VT/GY	1303	-	Tail Gate Ajar Switch Signal (1)	C	0.35	VT/GY	1303	--
D	0.5	L-BU/WH	6128	-	Rear Closure Unlatch Motor Unlatch Control	D	0.75	L-BU/WH	6128	-
E	0.5	BN/YE	820	-	CHMSL Supply Voltage	E	0.5	BN/YE	820	-
F	--	--	--	--	Not Used	F	--	--	--	--
G	0.75	BK	650	--	Ground	G	0.75	BK	650	--
H	--	--	--	--	Not Used	H	--	--	--	-

© Copyright Chevrolet. All rights reserved

X901 Liftgate Jumper Harness to Body Harness

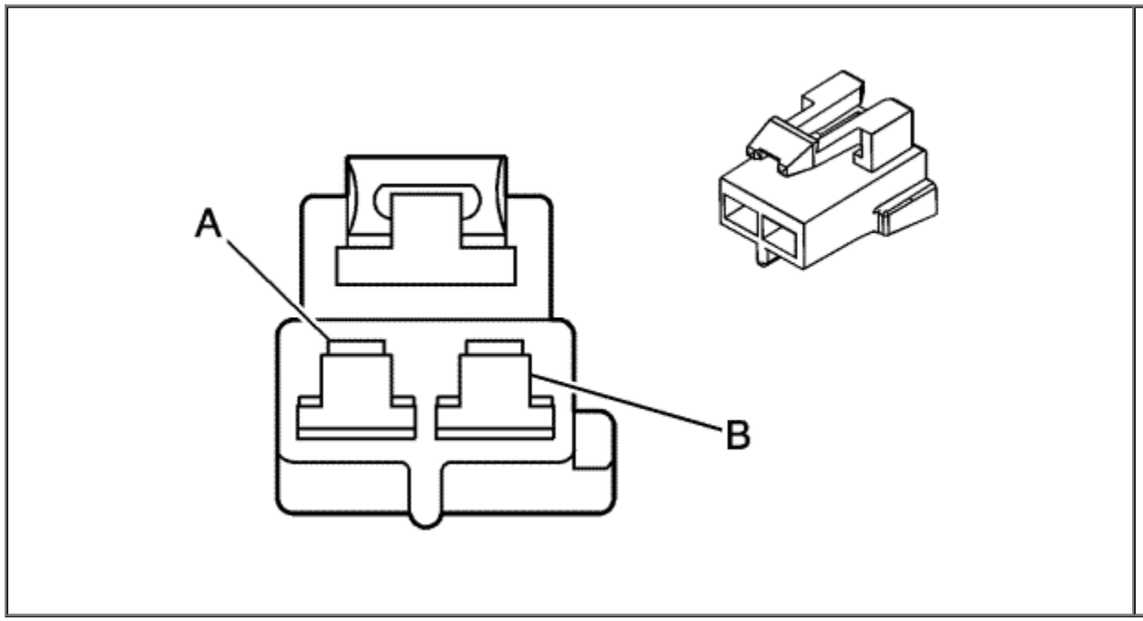

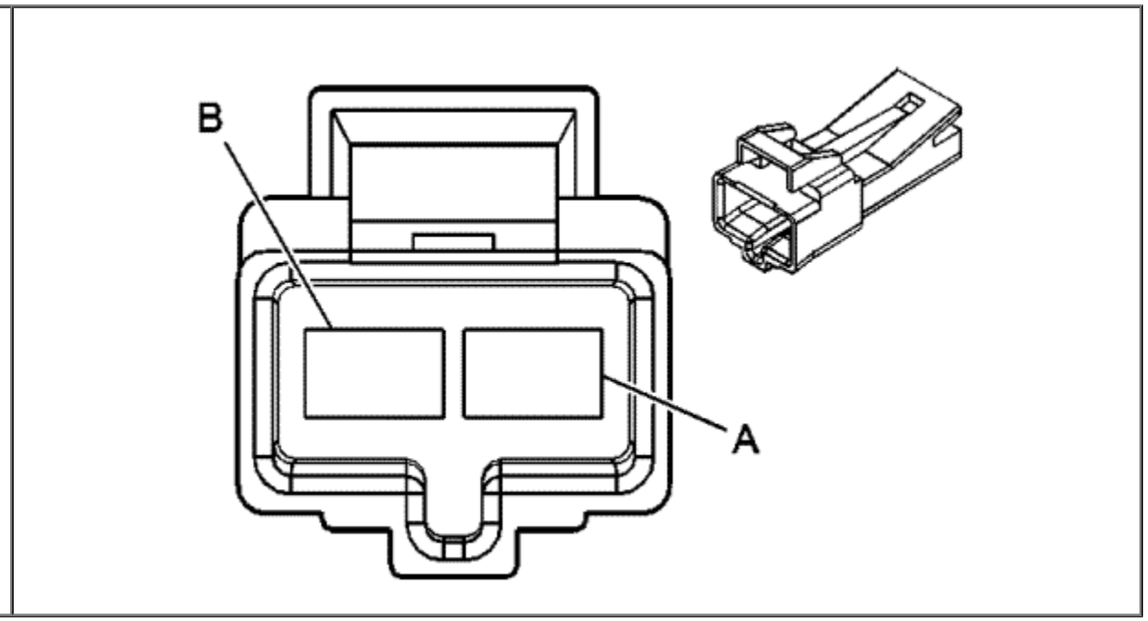

Connector Part Information

Harness Type: Tailgate Jumper
OEM Connector: 12064749
Service Connector: 12101888
Description: 2-Way F Metri-Pack 480 Series (BK)

Terminal Part Information

Terminated Lead: Service by Harness - See Part Catalog
Release Tool: J-38125-11A
Diagnostic Test Probe: J-35616-40 (BU)

Connector Part Information

Harness Type: Body
OEM Connector: 12064750
Service Connector: 12101935
Description: 2-Way M Metri-Pack 480 Series (BK)

Terminal Part Information

Terminated Lead: Service by Connector Assembly - 12101935
Release Tool: J-38125-11A
Diagnostic Test Probe: J-35616-40 (BU)

X901 Liftgate Jumper Harness to Body Harness

Pin	Size	Colour	Circuit	Option	Function	Pin	Size	Colour	Circuit	Option
A	4	BN/VT	293	-	Rear Defog Element Supply Voltage	A	4	BN/VT	293	-
B	4	BK	650	--	Ground	B	4	BK	650	-

© Copyright Chevrolet. All rights reserved

X905 Liftgate Jumper Harness to Liftgate Harness

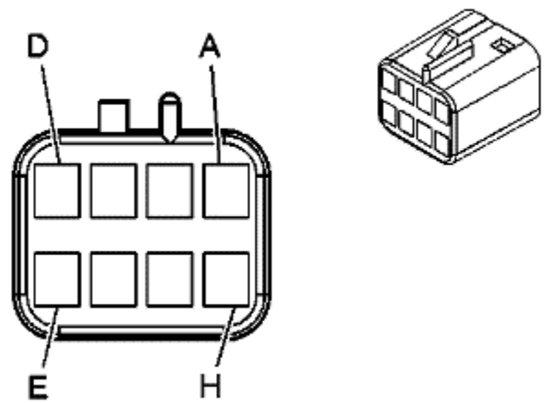

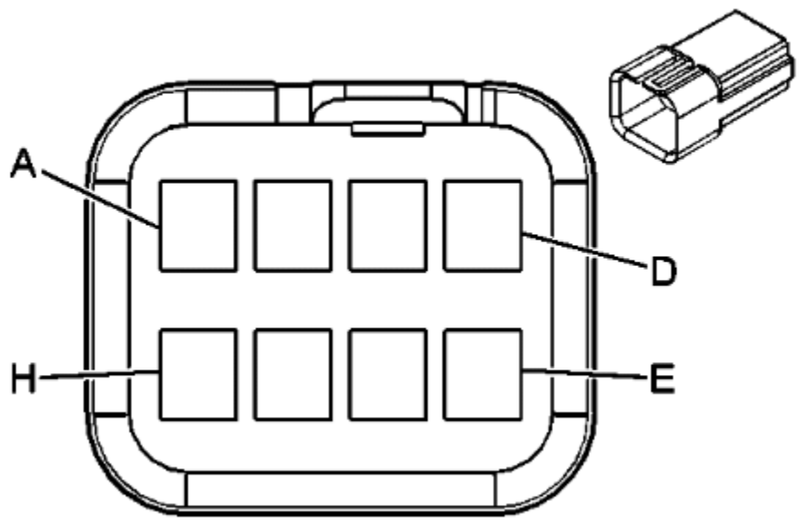

Connector Part Information

Harness Type: Tailgate Jumper
OEM Connector: 12047886
Service Connector: 12101822
Description: 8-Way F Metri-Pack 150 Series (BK)

Terminal Part Information

Pins: A, G and H
Terminated Lead: Service by Harness - See Part Catalog
Release Tool: J-38125-12A
Diagnostic Test Probe: J-35616-14 (GN)

Pins: B-E
Terminated Lead: Service by Harness - See Part Catalog

Connector Part Information

Harness Type: Liftgate
OEM Connector: 12045688
Service Connector: 12101827
Description: 8-Way M Metri-Pack 150 Series (BK)

Terminal Part Information

Terminated Lead: 13505668
Release Tool: J-38125-12A
Diagnostic Test Probe: J-35616-3 (GY)

Release Tool: J-38125-12A
Diagnostic Test Probe: J-35616-14 (GN)

X905 Liftgate Jumper Harness to Liftgate Harness

Pin	Size	Colour	Circuit	Option	Function	Pin	Size	Colour	Circuit	Option
A	0.75	BN/VT	293	-	Rear Defog Element Supply Voltage	A	0.75	BK	293	-
B	0.5	YE/L-BU	5797	-	Rear Closure Handle Switch Open Signal	B	0.5	YE/L-BU	5797	-
C	0.5	VT/GY	1303	-	Tail Gate Ajar Switch Signal (1)	C	0.5	VT/GY	1303	-
D	0.5	L-BU/WH	6128	-	Rear Closure Unlatch Motor Unlatch Control	D	0.5	L-BU/WH	6128	-
E	0.5	BN/YE	820	-	CHMSL Supply Voltage	E	0.5	BN/YE	820	-
F	--	--	--	--	Not Used	F	--	--	--	--
G	0.75	BK	650	--	Ground	G	0.75	BK	650	--
H	--	--	--	--	Not Used	H	--	--	--	-

© Copyright Chevrolet. All rights reserved

G101, G103, G109, and G117

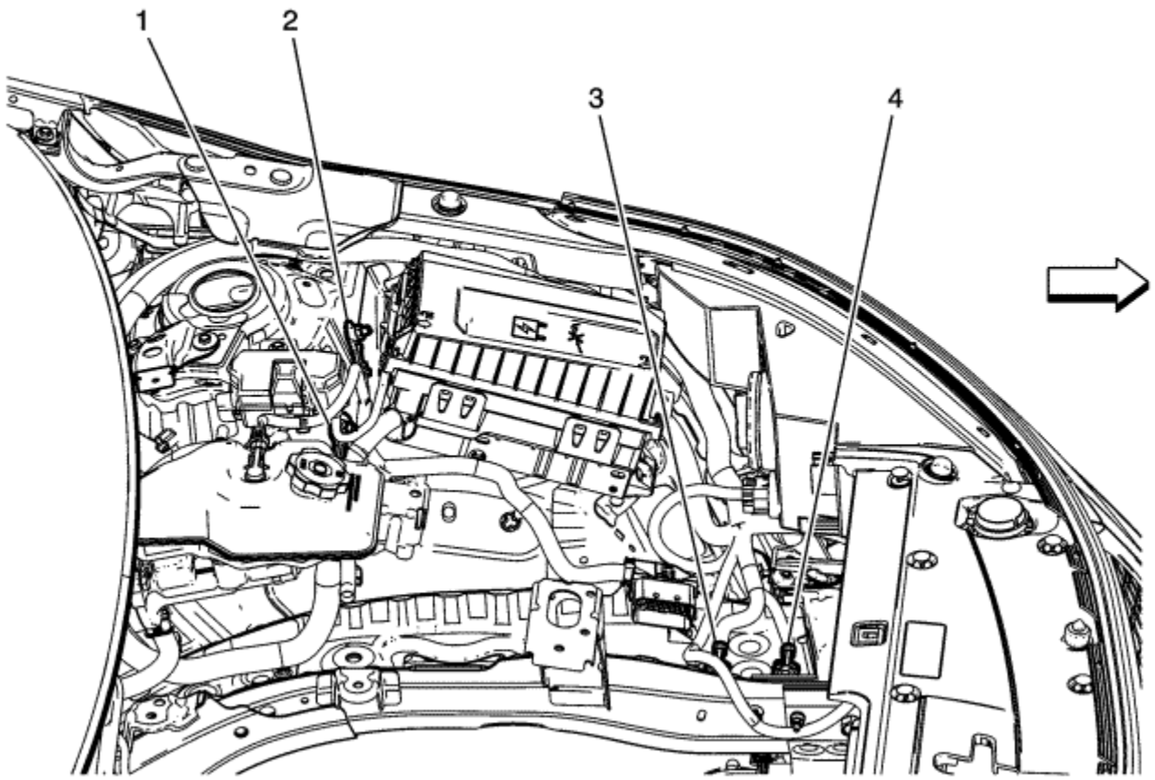

(1) G109
(2) G117
(3) G103
(4) G101

© Copyright Chevrolet. All rights reserved

G102, G104, and G105

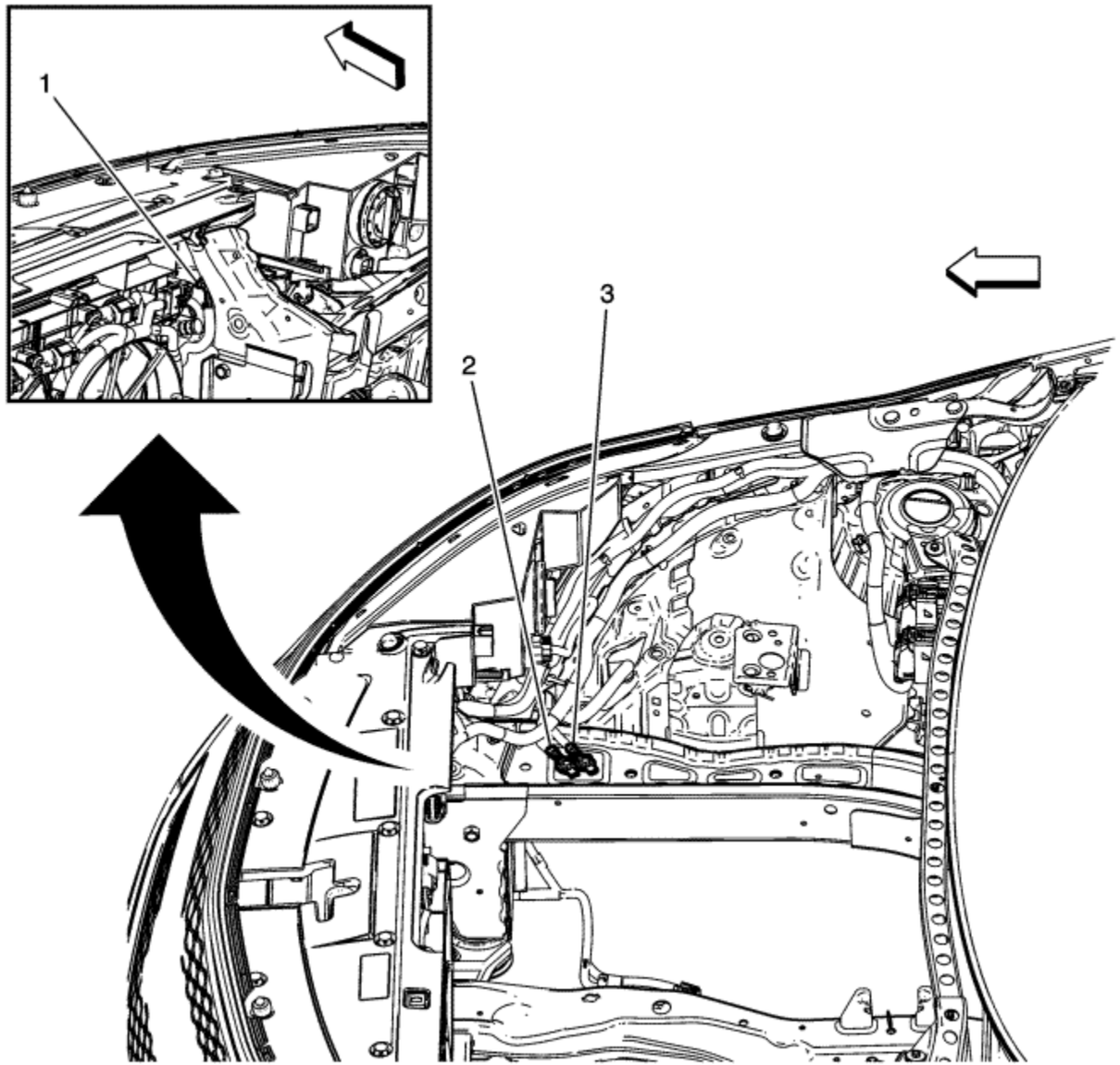

(1) G105
(2) G102
(3) G104

© Copyright Chevrolet. All rights reserved

G106 and G113

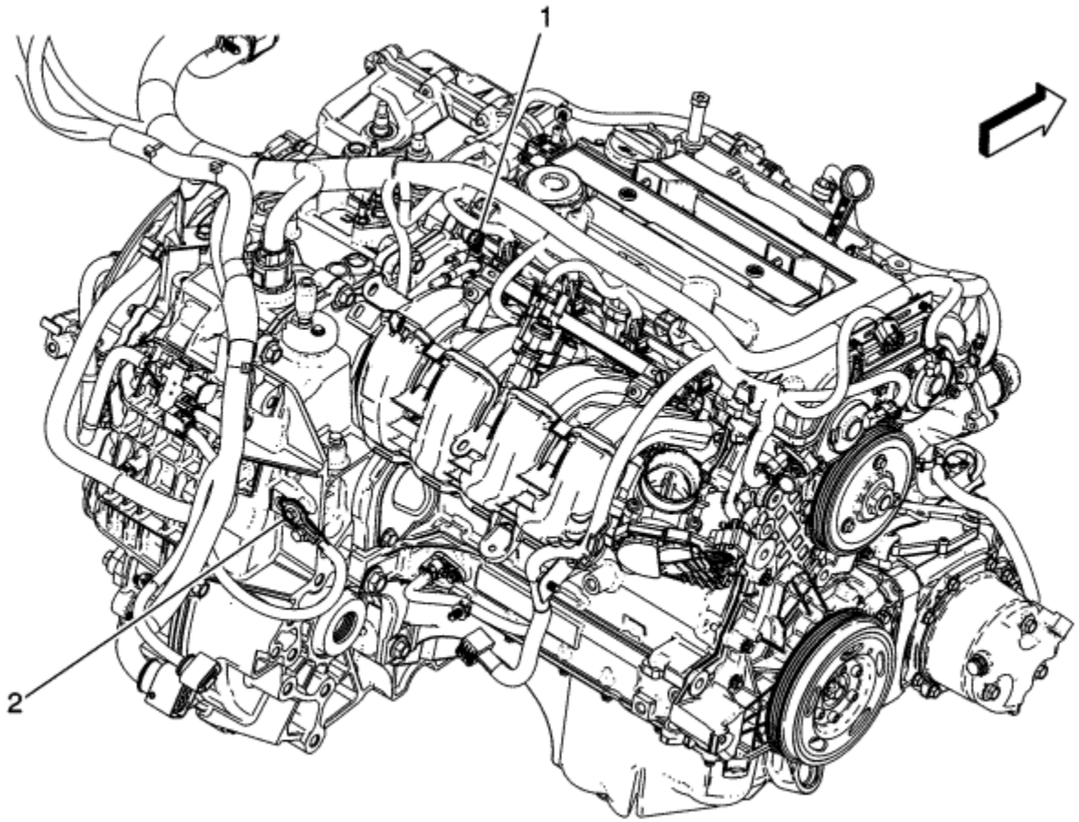

(1) G106
(2) G113

© Copyright Chevrolet. All rights reserved

G201, G202, G203, and G204

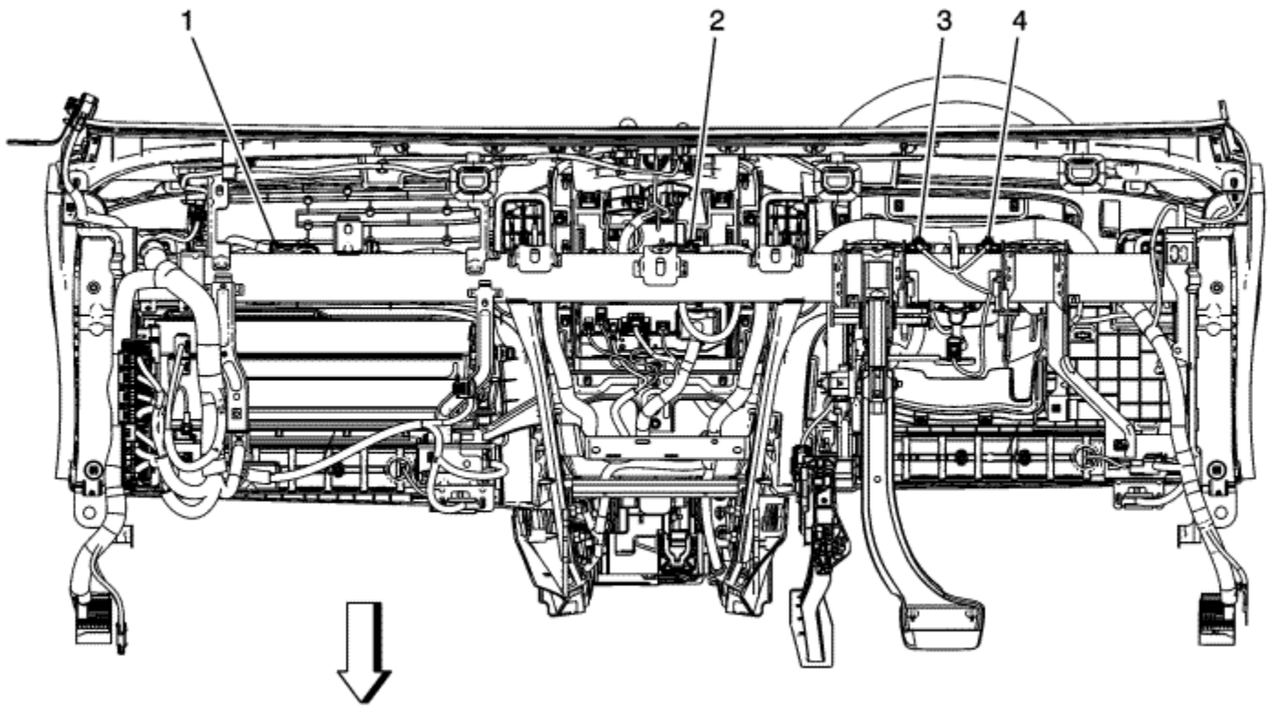

(1) G202
(2) G204
(3) G201
(4) G203

© Copyright Chevrolet. All rights reserved

G205 and G304

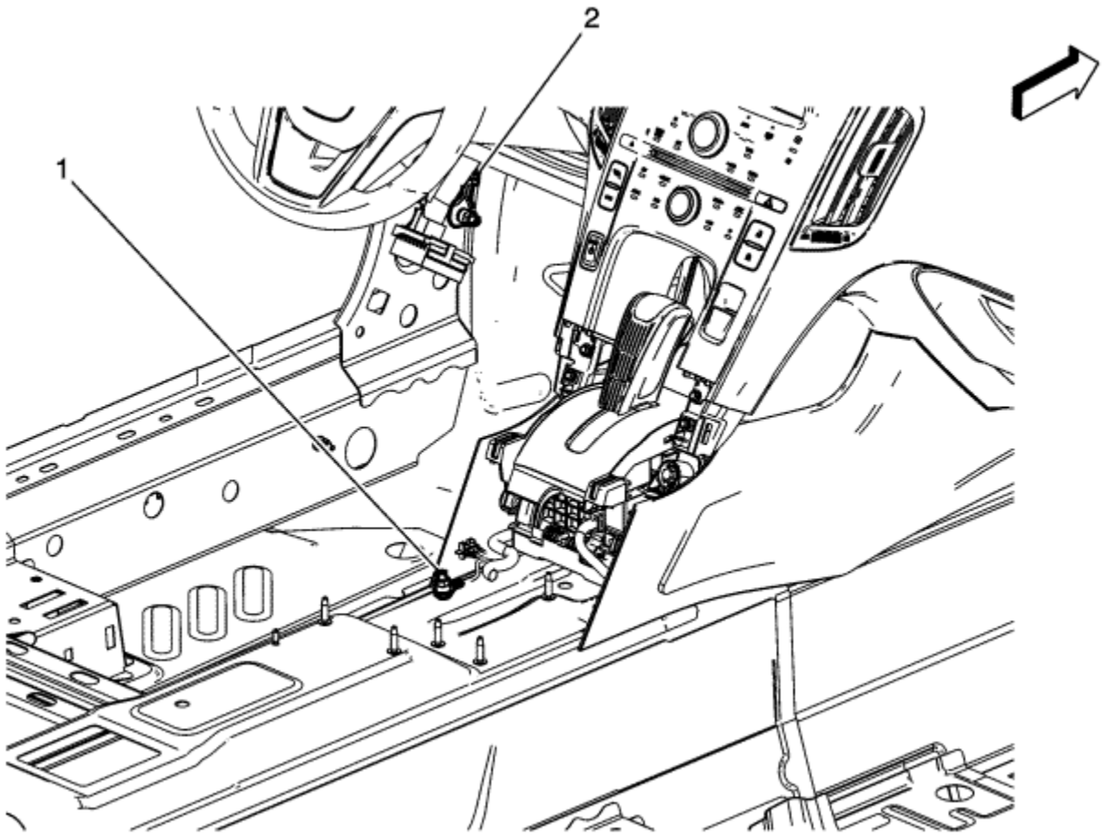

(1) G304
(2) G205

© Copyright Chevrolet. All rights reserved

G301

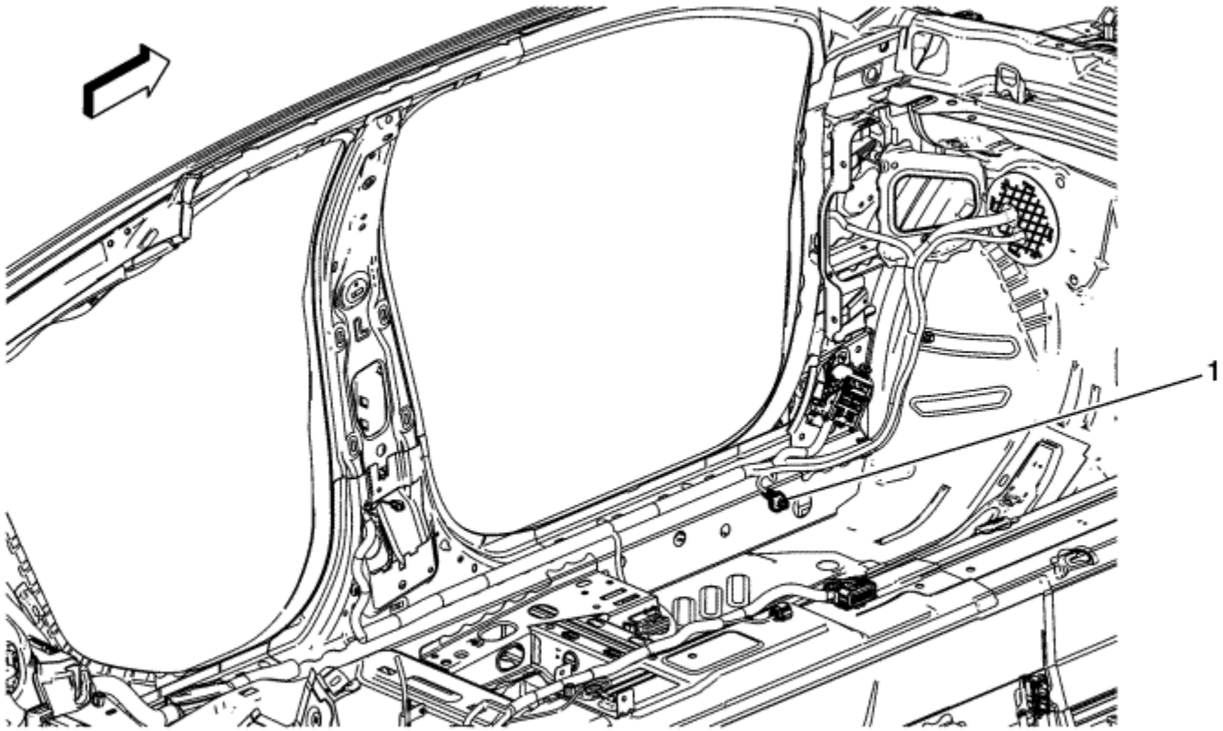

(1) G301

© Copyright Chevrolet. All rights reserved

G302

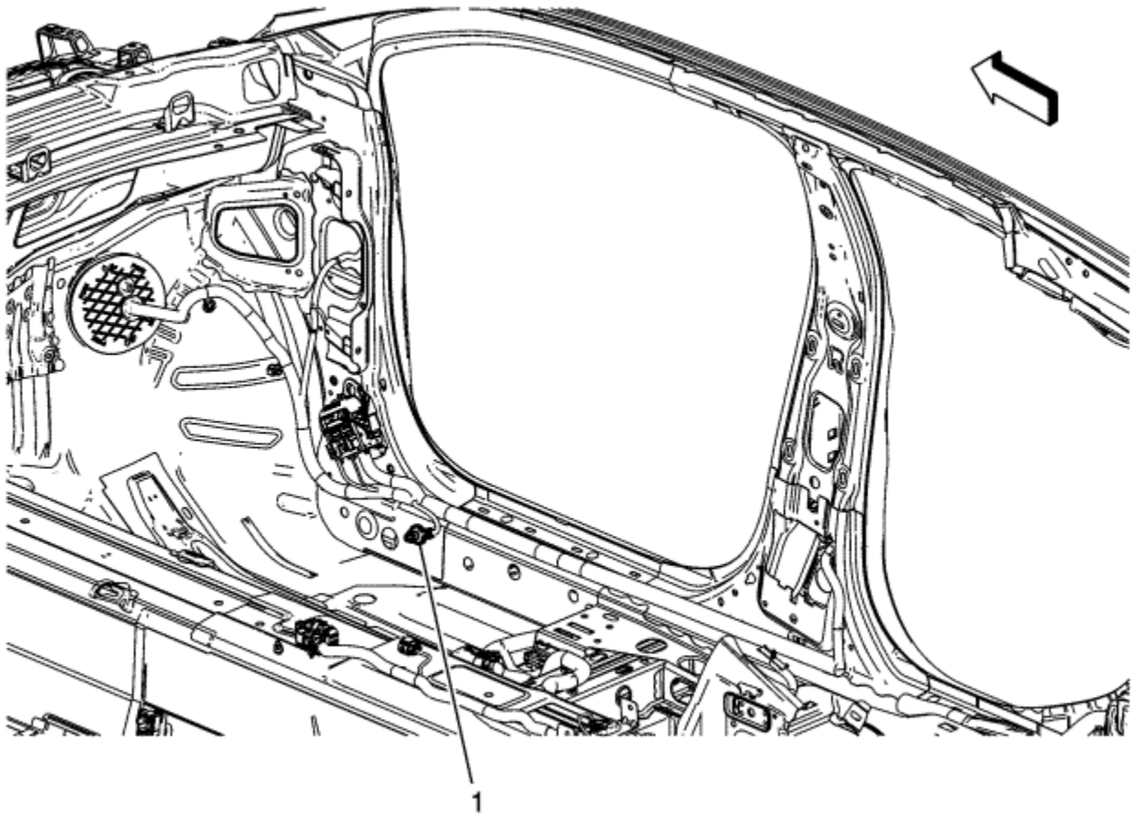

(1) G302

© Copyright Chevrolet. All rights reserved

G402 and G403

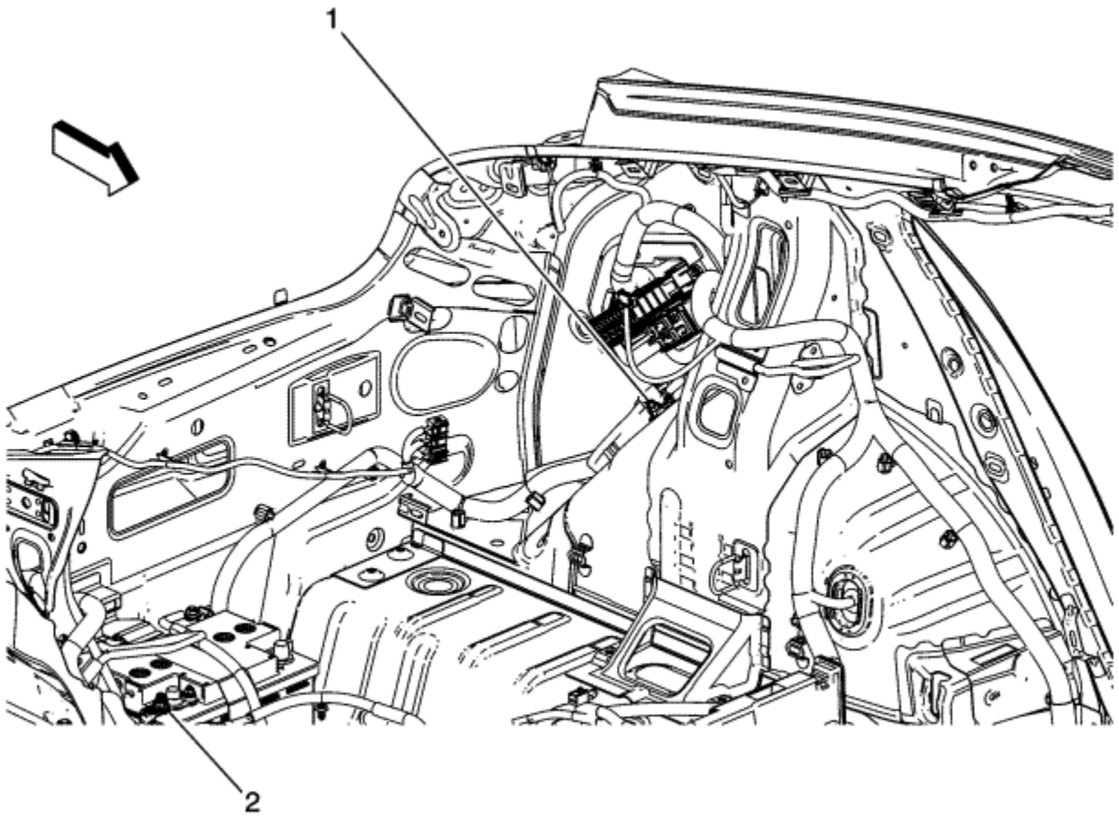

(1) G402
(2) G403

© Copyright Chevrolet. All rights reserved

G405 and G406

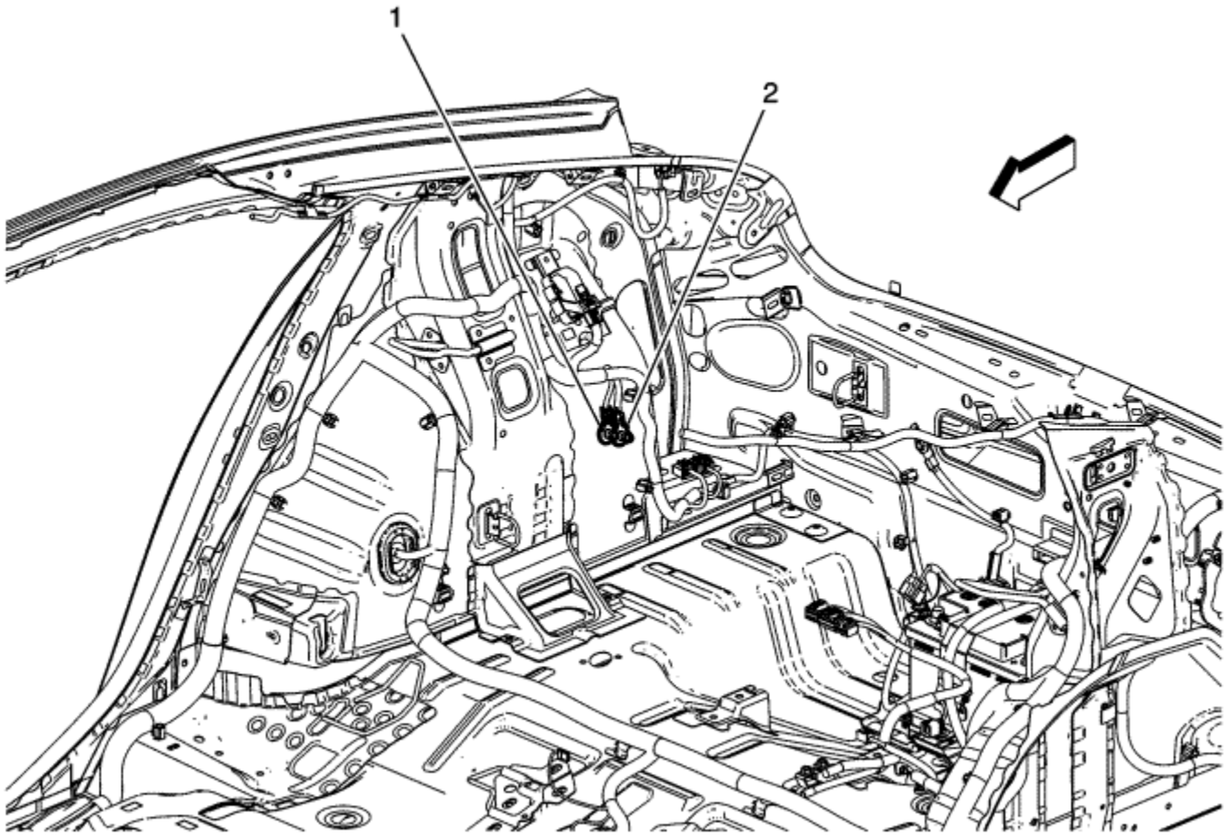

(1) G405
(2) G406

© Copyright Chevrolet. All rights reserved

JX300

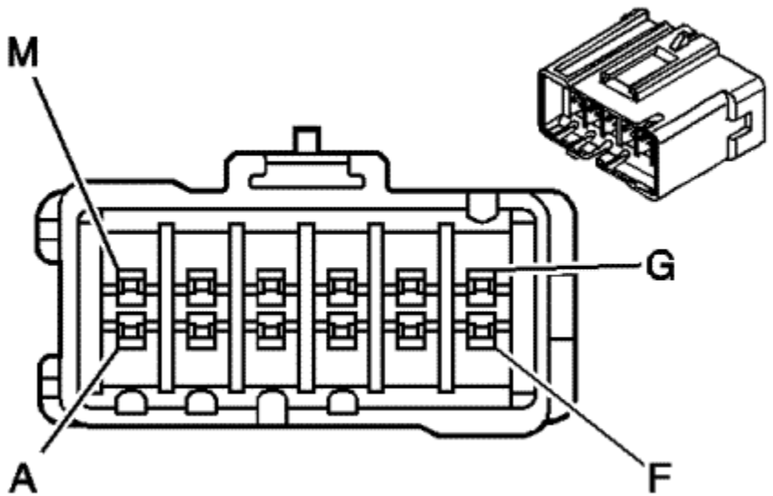

Connector Part Information

Harness Type: Body
OEM Connector: 15305291
Service Connector: 15305291
Description: 12-Way F Metri-Pack 280 Splice Saver SGL (BK)

Terminal Part Information

Terminated Lead: 13575721
Release Tool: J-38125-553
Diagnostic Test Probe: J-35616-4A (PU)

JX300

Pin	Size	Colour	Circuit	Function	Option
A	0.5	L-GN	5060	Low Speed GMLAN Serial Data	-
B	0.5	L-GN	5060	Low Speed GMLAN Serial Data	-
C	0.5	L-GN	5060	Low Speed GMLAN Serial Data	-
D-H	--	--	--	Not Used	--

J	0.5	L-GN	5060	Low Speed GMLAN Serial Data	-
K	0.5	L-GN	5060	Low Speed GMLAN Serial Data	-
L	0.5	L-GN	5060	Low Speed GMLAN Serial Data	-
M	0.5	L-GN	5060	Low Speed GMLAN Serial Data	-

© Copyright Chevrolet. All rights reserved

JX301

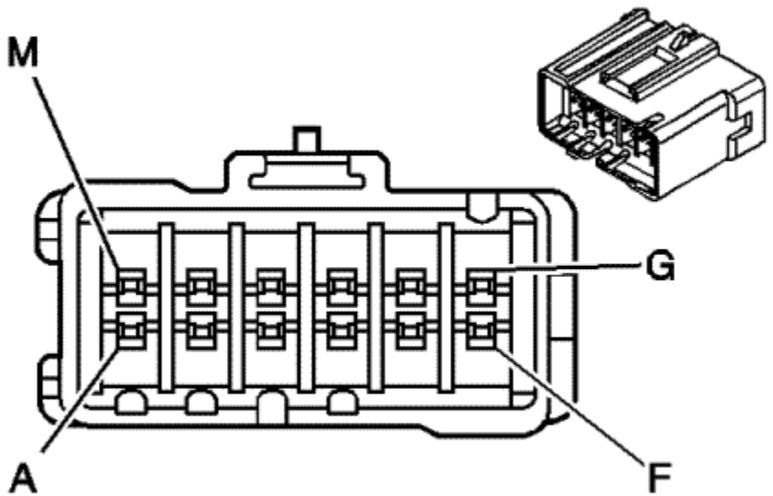

Connector Part Information

Harness Type: Instrument Panel
OEM Connector: 15305291
Service Connector: 15305291
Description: 12-Way F Metri-Pack 280 Splice Saver SGL (BK)

Terminal Part Information

Terminated Lead: 13575721
Release Tool: J-38125-553
Diagnostic Test Probe: J-35616-4A (PU)

JX301

Pin	Size	Colour	Circuit	Function	Option
A-E	--	--	--	Not Used	--
F	0.5	L-GN	5060	Low Speed GMLAN Serial Data	-
G	0.5	L-GN	5060	Low Speed GMLAN Serial Data	-
H	0.5	L-GN	5060	Low Speed GMLAN Serial Data	-

J	0.5	L-GN	5060	Low Speed GMLAN Serial Data	-
K	0.5	L-GN	5060	Low Speed GMLAN Serial Data	-
L	0.5	L-GN	5060	Low Speed GMLAN Serial Data	-
M	0.5	L-GN	5060	Low Speed GMLAN Serial Data	-

© Copyright Chevrolet. All rights reserved

Front of Vehicle Components (Opel)

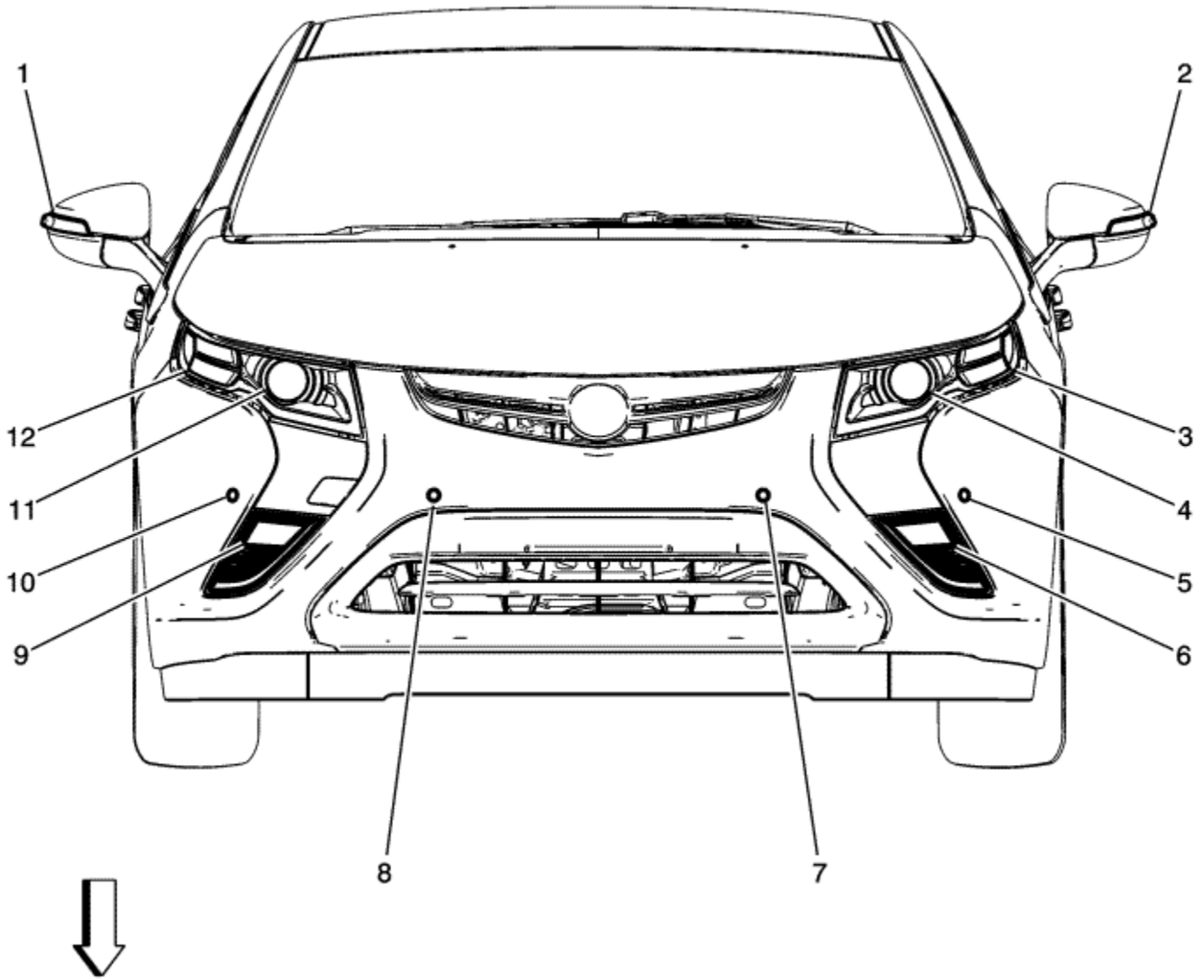

(1) E4Z Indicator Repeater Lamp - Right
(2) E4Y Indicator Repeater Lamp - Left
(3) E4C Daytime Running Lamp - Left
(4) E13L Headlamp - Left
(5) B78A Front Object Sensor - Left Outer (UD5)
(6) E4N Park/Indicator Lamp - Left

(7) B78C Front Object Sensor - Left Middle (UD5)
(8) B78D Front Object Sensor - Right Middle (UD5)
(9) E4P Park/Indicator Lamp -Right
(10) B78B Front Object Sensor - Right Outer (UD5)
(11) E13R Headlamp - Right
(12) E4D Daytime Running Lamp - Right

© Copyright Chevrolet. All rights reserved

Rear of Vehicle Components (Opel)

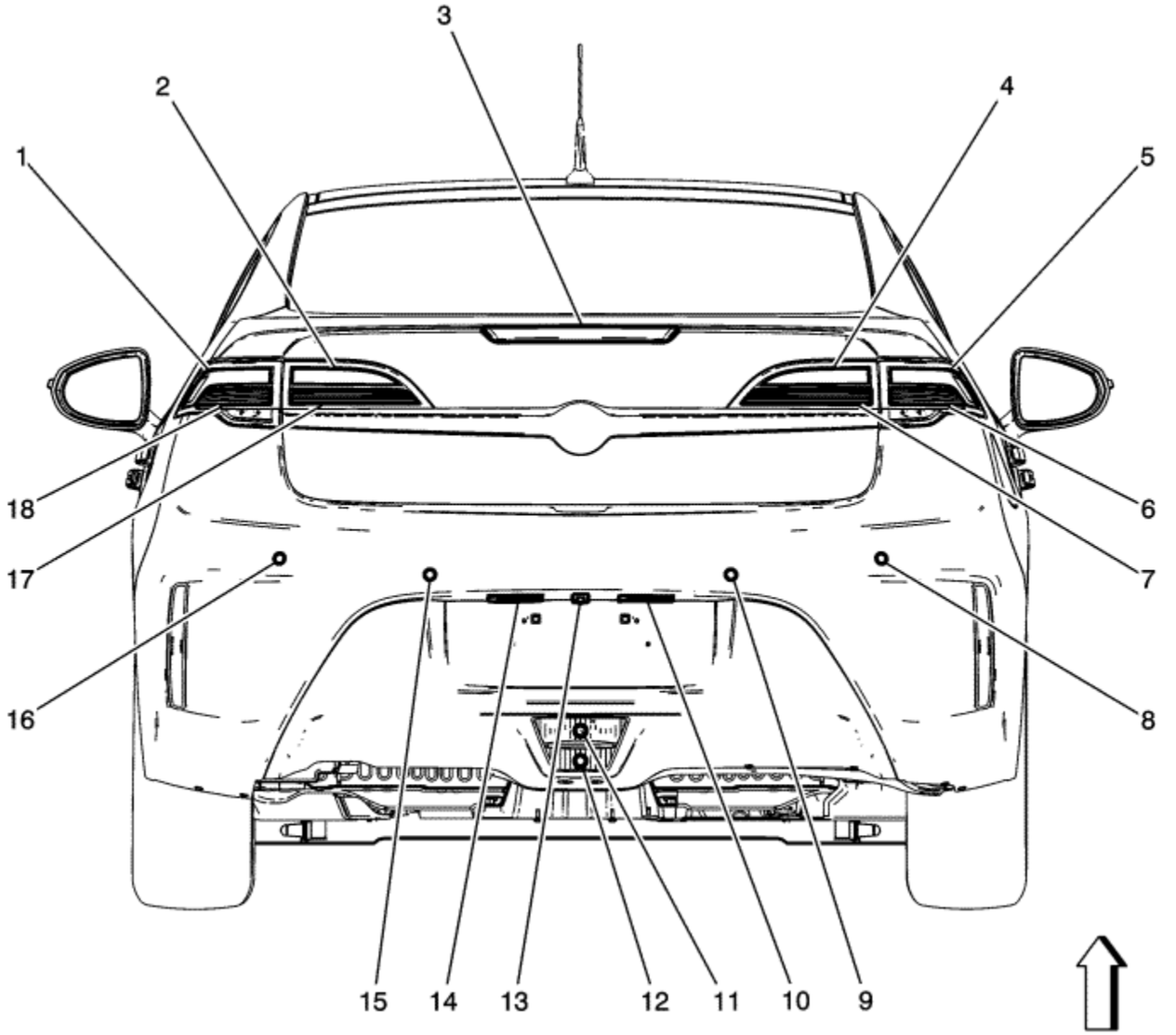

(1)
(2)
(3) E6 Centre High Mounted Brake Lamp
(4)
(5)
(6) E42R Tail Lamp Assembly - Right

(7)
(8) B78H Rear Object Sensor - Right Outer (UD5)
(9) B78F Rear Object Sensor - Right Middle (UD5)
(10) E7R Number Plate Lamp - Right
(11) E29R Fog Light - Rear
(12) E5 Reversing Light
(13) B87 Rearview Camera
(14) E7L Number Plate Lamp - Left
(15) B78E Rear Object Sensor - Left Middle (UD5)
(16) B78G Rear Object Sensor - Left Outer (UD5)
(17)
(18) E42L Tail Lamp Assembly - Left

© Copyright Chevrolet. All rights reserved

X50A Fuse Block - Underbonnet Label

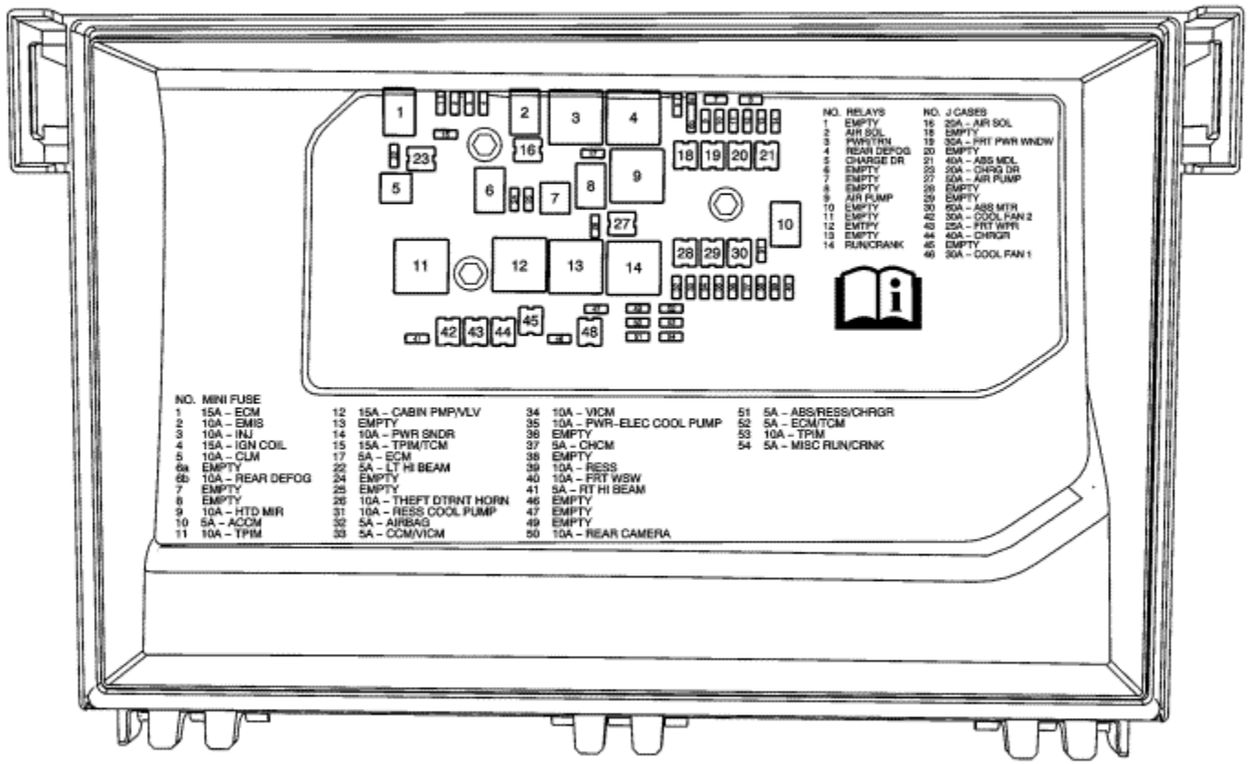

X50A Fuse Block - Underbonnet Label Usage

No.	Device Label Name	Device Assigned Name	Rating	Description
Fuses				

1	ECM	F1UA	15 A	K20 Engine Control Module
2	EMIS	F2UA	10 A	B52A Heated Oxygen Sensor 1, B52B Heated Oxygen Sensor 2, B75B Mass Air Flow/Intake Air Temperature Sensor, E41 Engine Coolant Thermostat Heater, Q12 Evaporative Emission Purge Solenoid Valve
3	INJ	F3UA	10 A	Q17A Fuel Injector 1, Q17B Fuel Injector 2, Q17C Fuel Injector 3, Q17D Fuel Injector 4
4	IGN COIL	F4UA	15 A	K35 Ignition Coil Module
5	CLM	F5UA	10 A	Not Used
6a	EMPTY	--	--	Not Used
6b	REAR DEMIST	F6UA	10 A	E18B Rear Demisting Grid - Lower
7	EMPTY	F7UA	--	Not Used
8	EMPTY	F8UA	--	Not Used
9	HTD MIR	F9UA	10 A	E17D Outside Rear-view Mirror Glass - Driver, E17P Outside Rear-view Mirror Glass - Passenger
10	ACCM	F10UA	5 A	G1A/C Compressor
11	TPIM	F11UA	10 A	T6 Power Inverter Module
12	CABIN PMP/VLV	F12UA	15 A	G36 Auxiliary Heater Coolant Pump, Q66 Passenger Compartment Heater Coolant Control Valve
13	EMPTY	F13UA	7.5 A	Not Used
14	PWR SNDR	F14UA	10 A	Not Used
15	TPIM/TCM	F15UA	15 A	K71 Transmission Control Module, T6 Power Inverter Module
16	AIR SOL	F16UA	20 A	Not Used
17	ECM	F17UA	5 A	K20 Engine Control Module
18	EMPTY	F18UA	--	Not Used
19	FRT PWR WNDW	F19UA	30 A	M74D Window Motor - Driver, S79P Window Switch - Passenger
20	EMPTY	F20UA	--	Not Used
21	ABS MDL	F21UA	40 A	K17 Electronic Brake Control Module
22	LT FULL BEAM	F22UA	5 A	M28L Full Beam Solenoid Actuator - Left
23	CHRG DR	F23UA	20 A	KR113 Charge Port Door Relay
24	EMPTY	F24UA	--	Not Used
25	EMPTY	F25UA	--	Not Used
26	THEFT DTRNT HORN	F26UA	10 A	Not Used
27	AIR PUMP	F27UA	50 A	Not Used
28	EMPTY	F28UA	--	Not Used
29	EMPTY	F29UA	--	Not Used
30	ABS MTR	F30UA	60 A	K17 Electronic Brake Control Module
31	RESS COOL PUMP	F31UA	10 A	G37 Hybrid Battery Pack Coolant Pump

32	AIRBAG	F32UA	5 A	K36 Inflatable Restraint Sensing and Diagnostic Module
33	CCM/VICM	F33UA	5 A	K27 Fuel Pump Control Module, K114B Hybrid Powertrain Control Module 2
34	VICM	F34UA	10 A	K114B Hybrid Powertrain Control Module 2
35	PWR-ELEC COOL PUMP	F35UA	10 A	G35 Hybrid Electronics Coolant Pump
36	EMPTY	F36UA	--	Not Used
37	CHCM	F37UA	5 A	K10 Coolant Heater Control Module
38	EMPTY	F38UA	--	Not Used
39	RESS	F39UA	10 A	A4 Hybrid Battery Pack, A28 Hybrid Battery Contactor Assembly, K16 Battery Energy Control Module
40	FRT WSW	F40UA	10 A	KR11 Windscreen Washer Pump Relay
41	RT FULL BEAM	F41UA	5 A	M28R Full Beam Solenoid Actuator - Right
42	COOL FAN 2	F42UA	30 A	G10R Cooling Fan Motor - Right
43	FRT WPR	F43UA	25 A	M75 Windscreen Wiper Motor
44	CHRGR	F44UA	40 A	T18 Battery Charger
45	EMPTY	F45UA	--	Not Used
46	EMPTY	F46UA	--	Not Used
47	EMPTY	F47UA	--	Not Used
48	COOL FAN 1	F48UA	30 A	G10L Cooling Fan Motor - Left
49	EMPTY	F49UA	--	Not Used
50	REAR CAMERA	F50UA	10 A	B87 Rear-view Camera
51	ABS/RESS/CHRGR	F51UA	5 A	A4 Hybrid Battery Pack, K16 Battery Energy Control Module, K17 Electronic Brake Control Module, T18 Battery Charger
52	ECM/TCM	F52UA	5 A	K20 Engine Control Module, Q8 Control Solenoid Valve Assembly
53	TPIM	F53UA	10 A	T6 Power Inverter Module
54	MISC RUN/CRNK	F54UA	5 A	G1 A/C Compressor, K1 14V Power Module, P14 Passenger Air Bag Disable Indicator, P16 Instrument Cluster
Relays				
1	EMPTY	--	--	Not Used
2	AIR SOL	--	--	Not Used
3	PWR/TRN	KR75 Powertrain Relay	-	F1UA, F2UA, F3UA and F4UA Fuses
4	REAR DEMIST	KR4B Outside Rear-view Mirror Heater Relay	-	F6UA and F9UA Fuses
5	CHARGE DR	KR119 Charge Port Door Relay	-	M80 Charge Port Door Actuator
6	EMPTY	--	--	Not Used
7	EMPTY	--	--	Not Used

8	EMPTY	--	--	Not Used
9	AIR PUMP	--	--	Not Used
10	EMPTY	--	--	Not Used
11	EMPTY	--	--	Not Used
12	EMPTY	--	--	Not Used
13	EMPTY	--	--	Not Used
14	RUN/CRANK	KR74 Ignition Run Relay	-	F32UA, F33UA, F50UA, F51UA, F52UA, F53UA and F54UA Fuses
Important: Relays listed below are non-serviceable Printed Circuit Board (PCB) relays and are internal to the block				
--	--	KR11 Windscreen Washer Pump Relay	-	G24 Windscreen Washer Pump
--	--	KR48 Headlamp High Beam Relay	-	F22UA and F41UA Fuses
Note: Items listed below are diagnostic testing points				
TP01	--	--	--	--
TP02	--	--	--	--
TP03	--	--	--	--
TP04	--	--	--	--
TP05	--	--	--	--
TP06	--	--	--	--
TP07	--	--	--	--
TP08	--	--	--	--
TP09	--	--	--	--
TP10	--	--	--	--
TP11	--	--	--	-

© Copyright Chevrolet. All rights reserved

X50A Fuse Block - Under bonnet Top View

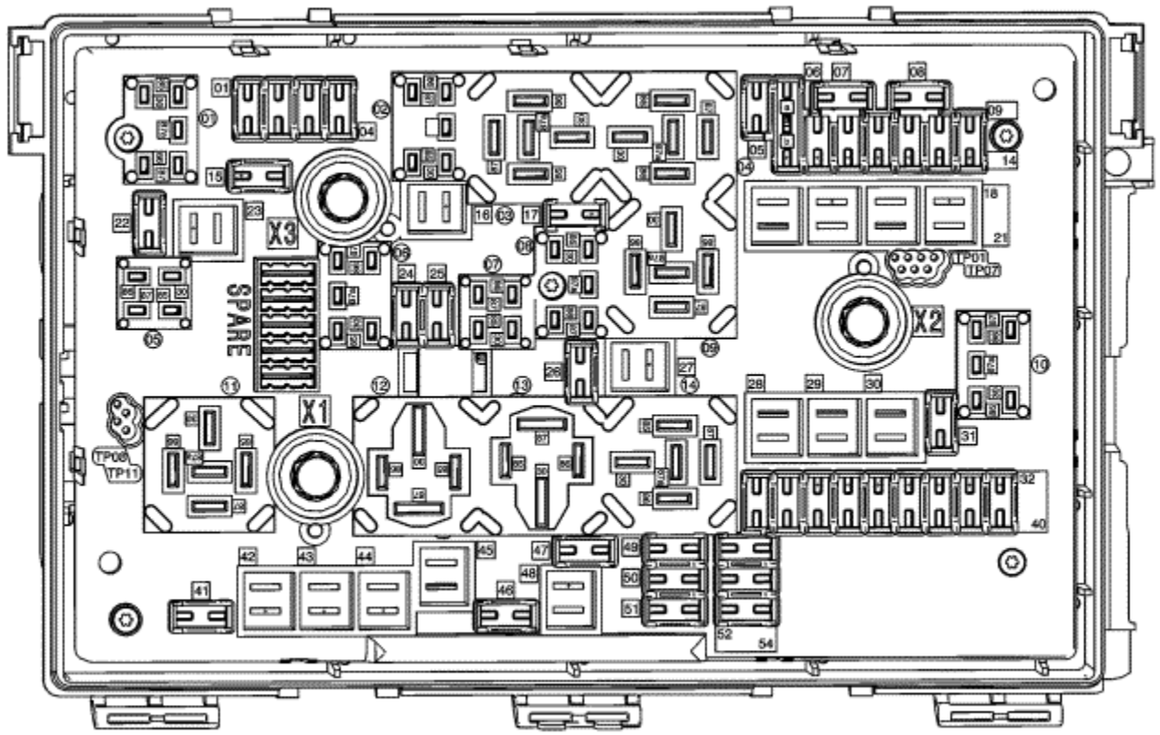

© Copyright Chevrolet. All rights reserved

X50A Fuse Block - Under bonnet Bottom View

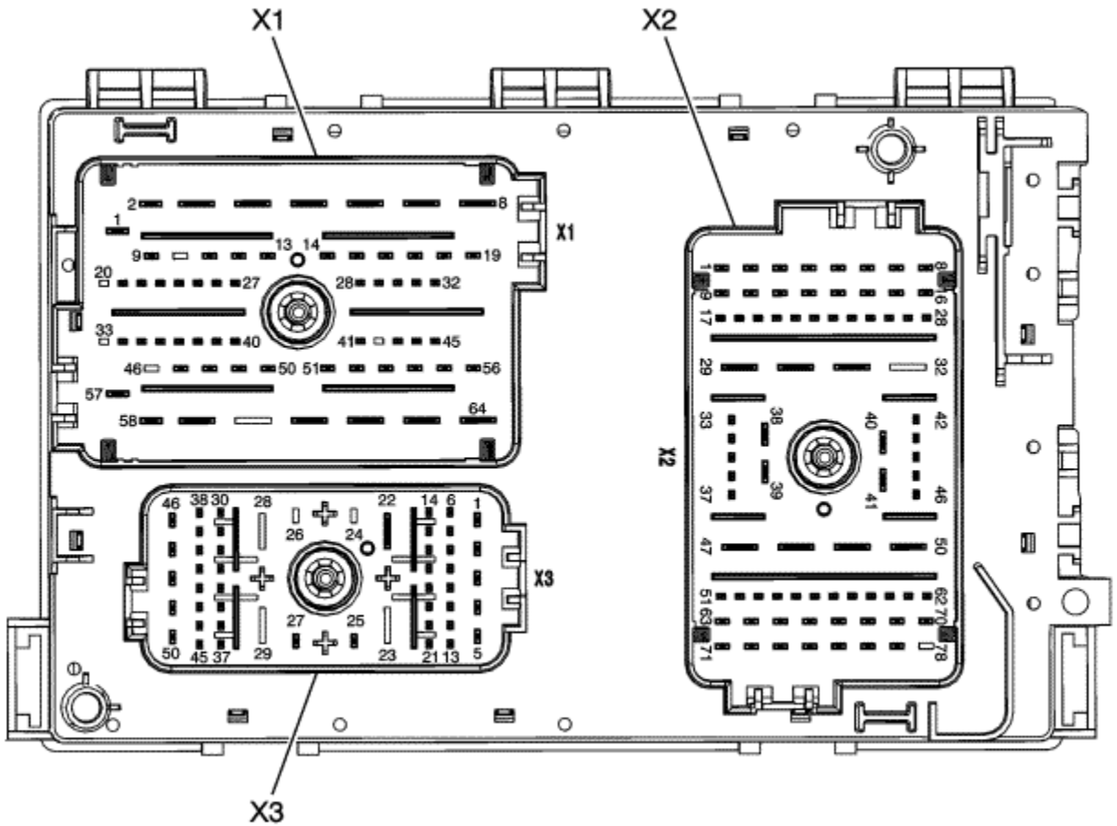

© Copyright Chevrolet. All rights reserved

X50A Fuse Block - Underhood X1

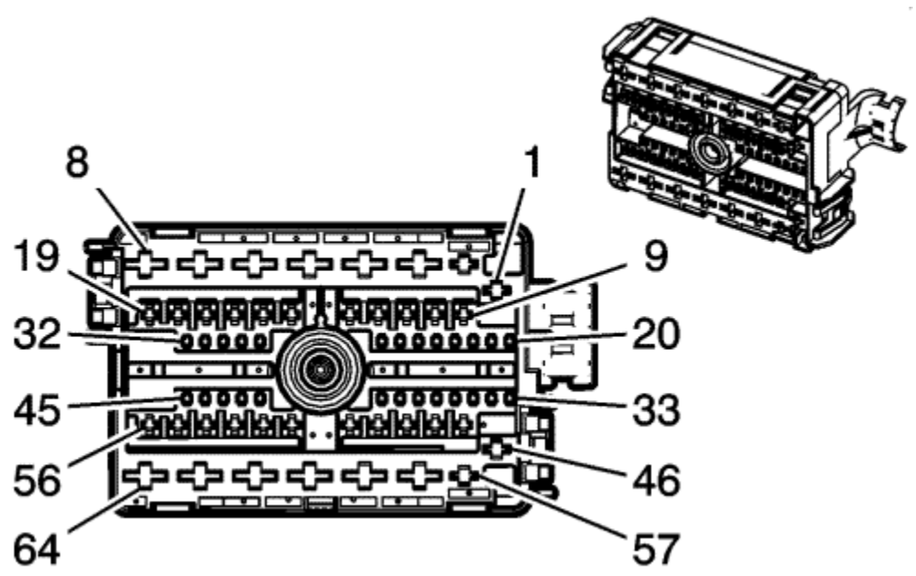

Connector Part Information

Harness Type: Forward Lamp
OEM Connector: ZF64-3
Service Connector: 13577511
Description: 64-Way F (BK)

Terminal Part Information

Pins: 4-6, 8, 58
Terminated Lead: 13580021
Release Tool: J-38125-11A
Diagnostic Test Probe: J-35616-22 (RD)
Terminal/Tray: Pending
Core/Insulation Crimp: Pending

Pins: 11, 13-16, 47, 53, 56
Terminated Lead: 13578846
Release Tool: J-38125-36
Diagnostic Test Probe: J-35616-35 (VT)
Terminal/Tray: 2-964284-1/25
Core/Insulation Crimp: E/A

Pins: 48
Terminated Lead: 13580021
Release Tool: J-38125-36
Diagnostic Test Probe: J-35616-35 (VT)
Terminal/Tray: 4-965999-1/25
Core/Insulation Crimp: 4/A

X50A Fuse Block - Underhood X1

Pin	Size	Colour	Circuit	Function	Option
1-3	--	--	--	Not Used	--
4	3	RD/L-BU	540	Battery Positive Voltage	--
5	2.5	RD/YE	3740	Battery Positive Voltage	—
6	3	RD/WH	640	Battery Positive Voltage	-
7	--	--	--	Not Used	--
8	3	RD/WH	140	Battery Positive Voltage	-
9-10	--	--	--	Not Used	--
11	0.5	WH	311	Right Headlamp Main beam Supply Voltage	-
12	--	--	--	Not Used	--
13	0.5	VT/GY	139	Run/Crank Ignition 1 Voltage	--
14	0.5	GY/VT	228	Windscreen Washer Pump Control	-
15	0.5	VT/L-GN	439	Run/Crank Ignition 1 Voltage	-
16	0.5	VT/L-GN	439	Run/Crank Ignition 1 Voltage	--
17-46	--	--	--	Not Used	--
47	0.5	WH	711	Left Headlamp Main beam Supply Voltage	-
48	2.5	BK	1950	Ground	--
49-52	--	--	--	Not Used	--
53	0.75	RD/VT	3340	Battery Positive Voltage	-
54-55	--	--	--	Not Used	--
56	0.5	L-BU/L-GN	6837	Siren #1 Supply	-
57	--	--	--	Not Used	--
58	1	GY/L-GN	3696	Charge Port Door Actuator Supply Voltage	-
59-64	--	--	--	Not Used	--

© Copyright Chevrolet. All rights reserved

X50A Fuse Block - Underhood X2

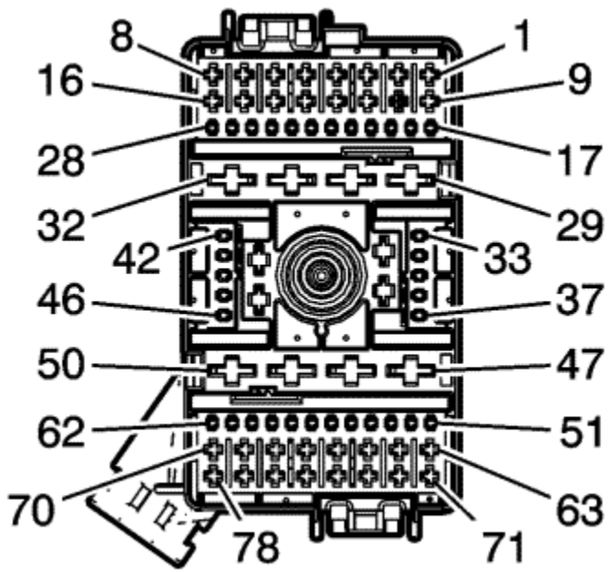

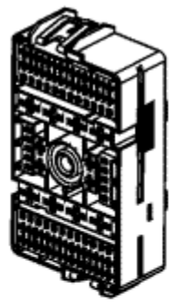

Connector Part Information

Harness Type: Body
OEM Connector: 13295572
Service Connector: 13355842
Description: 78-Way F (BK)

Terminal Part Information

Pins: 1-4, 6, 8, 10-12, 67, 72-74
Terminated Lead: 13295572
Release Tool: J-38125-36
Diagnostic Test Probe: J-35616-35 (VT)
Terminal/Tray: 2-964284-1/25
Core/Insulation Crimp: E/A

Pins: 9, 18, 20-24, 28, 31, 35, 36, 48, 50, 59, 60, 76
Terminated Lead: 13578846
Release Tool: J-38125-36
Diagnostic Test Probe: J-35616-35 (VT)
Terminal/Tray: Pending
Core/Insulation Crimp: Pending

Pins: 75
Terminated Lead: 13578846
Release Tool: J-38125-36
Diagnostic Test Probe: J-35616-35 (VT)
Terminal/Tray: 964280-2/15
Core/Insulation Crimp: E/2

X50A Fuse Block - Underhood X2

Pin	Size	Colour	Circuit	Function	Option
1	0.75	VT/GY	2339	Run/Crank Ignition 1 Voltage	-
2	0.5	VT/WH	639	Run/Crank Ignition 1 Voltage	--
	0.5	VT/WH	639	Run/Crank Ignition 1 Voltage	--
3	0.5	RD/L-BU	5240	Battery Positive Voltage	-
4	0.75	RD/L-BU	3940	Battery Positive Voltage	--
5	--	--	--	Not Used	--
6	0.5	RD/GY	2140	Battery Positive Voltage	-
7	--	--	--	Not Used	--
8	0.5	RD/VT	1640	Battery Positive Voltage	-
9	0.35	VT/GY	139	Run/Crank Ignition 1 Voltage	--
	0.5	VT/GY	139	Run/Crank Ignition 1 Voltage	--
10	0.5	VT/L-GN	439	Run/Crank Ignition 1 Voltage	-
11	0.75	WH/L-BU	3266	Child Security Lock Motor Unlock Control	--
12	0.75	GY	295	Door Lock Actuator Lock Control	-
13-17	--	--	--	Not Used	--
18	0.35	BN/VT	1969	Headlamp Main Beam Relay Control	-
19	--	--	--	Not Used	--
20	0.5	L-GN/VT	5199	Run/Crank Relay Coil Control	--
21	0.5	RD/WH	2740	Battery Positive Voltage	--
22	0.35	L-GN/GY	465	Fuel Pump Primary Relay Control	--
23	0.35	YE/VT	3695	Charge Port Door Relay Control	--
24	0.35	WH/L-BU	6311	Cruise/ETC/TCC Brake Signal	-
25-27	--	--	--	Not Used	--
28	0.5	VT/L-GN	39	Run/Crank Ignition 1 Voltage	-

29-30	--	--	--	Not Used	--
31	5	RD/BN	1742	Battery Positive Voltage	-
32-34	--	--	--	Not Used	--
35	0.5	BN/GY	2268	Windscreen Washer Relay Control	-
36	0.35	VT/YE	3267	Child Security Lock Relay Control	-
37-47	--	--	--	Not Used	--
48	2	RD/BN	3640	Battery Positive Voltage	-
	2.5	RD/BN	3640	Battery Positive Voltage	-
49	--	--	--	Not Used	--
50	3	RD/WH	342	Battery Positive Voltage	-
51-58	--	--	--	Not Used	--
59	0.35	RD/VT	1940	Battery Positive Voltage	—
60	0.5	BN/VT	193	Rear Demist Relay Control	-
61-66	--	--	--	Not Used	--
67	1	GY/L-GN	3271	Door Lock Control (2)	-
68-71	--	--	--	Not Used	--
72	0.75	BN/VT	293	Rear Defog Element Supply Voltage	-
73	1	BN/YE	2267	Mirror Heating Element Supply Voltage	--
74	0.5	RD/WH	2740	Battery Positive Voltage	--
75	0.35	RD/VT	1940	Battery Positive Voltage	—
76	0.75	RD/WH	3440	Battery Positive Voltage	-
	0.75	RD/WH	3440	Battery Positive Voltage	-
77-78	--	--	--	Not Used	--

© Copyright Chevrolet. All rights reserved

X50A Fuse Block - Underbonnet X3

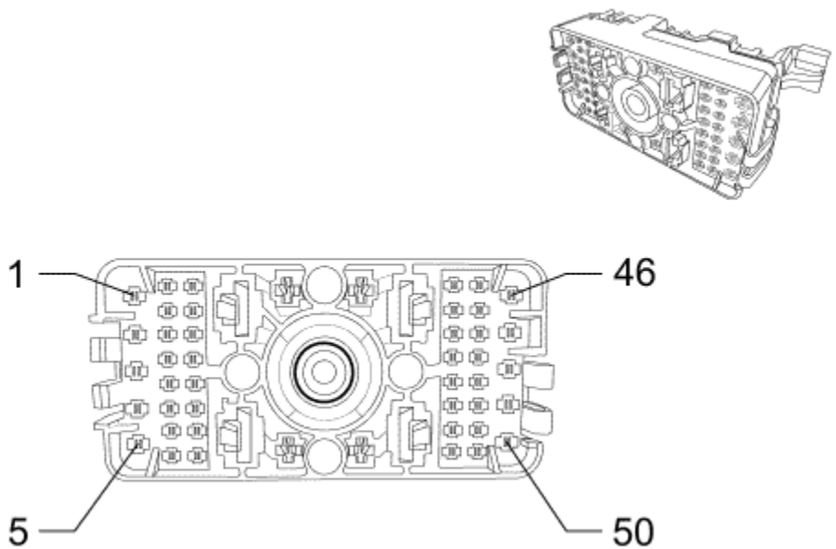

Connector Part Information

Harness Type: Engine
OEM Connector: 13262029
Service Connector: 13505902
Description: 50-Way F DSQ 1.5 2.8 Metri-Pack 800 Series (BK)

Terminal Part Information

Pins: 1-3, 5, 47
Terminated Lead: 13575780
Release Tool: J-38125-36
Diagnostic Test Probe: J-35616-35 (VT)
Terminal/Tray: 2-964284-1/25
Core/Insulation Crimp: E/A

Pins: 4, 27
Terminated Lead: 13575541
Release Tool: J-38125-36
Diagnostic Test Probe: J-35616-35 (VT)

Terminal/Tray: Pending
Core/Insulation Crimp: Pending

Pins: 6, 8, 11, 12, 17, 20, 21, 33, 37, 41, 44
Terminated Lead: Pins 6, 8, 11, 12, 17, 20, 21, 33, 41, 44 - 13575538
Terminated Lead: Pins 37 - 13575539
Release Tool: J-38125-560
Diagnostic Test Probe: J-35616-14 (GN)
Terminal/Tray: 962943-5/16
Core/Insulation Crimp: E/A

Pins: 22
Terminated Lead: 13575718
Release Tool: J-38125-558
Diagnostic Test Probe: J-35616-44 (YE)
Terminal/Tray: 12110127/19
Core/Insulation Crimp: F/G

X50A Fuse Block - Underbonnet X3

Pin	Size	Colour	Circuit	Function	Option
1	0.75	VT/L-BU	5290	Powertrain Main Relay Fused Supply (1)	-
2	0.75	VT/L-BU	5291	Powertrain Main Relay Fused Supply (2)	-
3	1	VT/L-BU	5292	Powertrain Main Relay Fused Supply (3)	-
4	0.5	VT/WH	239	Run/Crank Ignition 1 Voltage	--
5	--	--	--	Not Used	--
6	0.5	VT/L-BU	5293	Powertrain Main Relay Fused Supply (4)	-
7	--	--	--	Not Used	--
8	0.5	VT/L-GN	39	Run/Crank Ignition 1 Voltage	--
9-16	--	--	--	Not Used	--
17	0.5	WH	5148	Engine Main Relay Control	-
18-19	--	--	--	Not Used	--
20	0.5	VT/BK	339	Run/Crank Ignition 1 Voltage	-
21-26	--	--	--	Not Used	--
27	0.5	RD/YE	240	Battery Positive Voltage	-
28-32	--	--	--	Not Used	--
33	0.5	WH/L-BU	6311	Cruise/ETC/TCC Brake Signal	-

34-36	--	--	--	Not Used	--
37	0.75	RD/BN	440	Battery Positive Voltage	-
38-40	--	--	--	Not Used	--
41	0.5	RD/WH	2740	Battery Positive Voltage	--
42-43	--	--	--	Not Used	-
44	0.5	RD/VT	1940	Battery Positive Voltage	—
45-46	--	--	--	Not Used	--
47	0.5	L-GN/GY	465	Fuel Pump Primary Relay Control	--
48-50	--	--	--	Not Used	--

© Copyright Chevrolet. All rights reserved

X50A Fuse Block - Underbonnet X4

Connector Part Information

Harness Type: Body
OEM Connector: 13605716
Service Connector: Pending
Description: RING D.5.4

Terminal Part Information

Terminated Lead: Pending
Release Tool: No Tool Reqd
Diagnostic Test Probe: No Tool Reqd
Terminal/Tray: Pending
Core/Insulation Crimp: Pending

X50A Fuse Block - Underbonnet X4

Pin	Size	Colour	Circuit	Function	Option
A	25	RD/YE	2	Battery Positive Voltage	-

© Copyright Chevrolet. All rights reserved

X50B Fuse Block - Under bonnet Auxiliary Top View

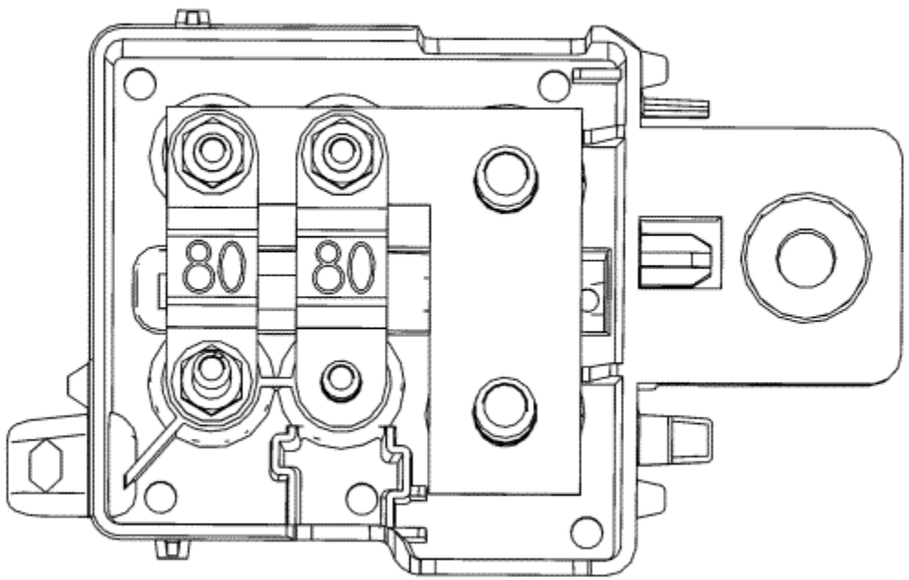

X50B Fuse Block - Underbonnet Auxiliary Usage

No.	Device Label Name	Device Assigned Name	Rating	Description
1	--	F1UB	80 A	Charging Provision
2	--	F2UB	80 A	K43 Power Steering Control Module

© Copyright Chevrolet. All rights reserved

X50B Fuse Block - Underbonnet Auxiliary X1

Connector Part Information

Harness Type: Not Available
OEM Connector: Not Available
Service Connector: Pending
Description: 1-Way Ring

Terminal Part Information

Terminated Lead: Service by Connector Assembly - Pending
Release Tool: No Tool Reqd
Diagnostic Test Probe: No Tool Reqd
Terminal/Tray: Pending
Core/Insulation Crimp: Pending

X50B Fuse Block - Underbonnet Auxiliary X1

Pin	Size	Colour	Circuit	Function	Option
A	25	RD	40	Battery Positive Voltage	-

© Copyright Chevrolet. All rights reserved

X50B Fuse Block - Under bonnet Auxiliary X2

Connector Part Information

Harness Type: Not Available
OEM Connector: Not Available
Service Connector: Pending
Description: 1-Way Ring

Terminal Part Information

Terminated Lead: Service by Connector Assembly - Pending
Release Tool: No Tool Reqd
Diagnostic Test Probe: No Tool Reqd
Terminal/Tray: Pending
Core/Insulation Crimp: Pending

X50B Fuse Block - Under bonnet Auxiliary X2

Pin	Size	Colour	Circuit	Function	Option
A	25	RD/YE	2	Battery Positive Voltage	-

© Copyright Chevrolet. All rights reserved

X50B Fuse Block - Under bonnet Auxiliary X3

Connector Part Information

Harness Type: Engine
OEM Connector: 13605714
Service Connector: Pending
Description: 1-Way Ring

Terminal Part Information

Terminated Lead: Service by Connector Assembly - Pending
Release Tool: No Tool Reqd
Diagnostic Test Probe: No Tool Reqd
Terminal/Tray: Pending
Core/Insulation Crimp: Pending

X50B Fuse Block - Under bonnet Auxiliary X3

Pin	Size	Colour	Circuit	Function	Option
A	10	RD/L-GN	242	Battery Positive Voltage	-

© Copyright Chevrolet. All rights reserved

X51L Fuse Block - Instrument Panel Left Label

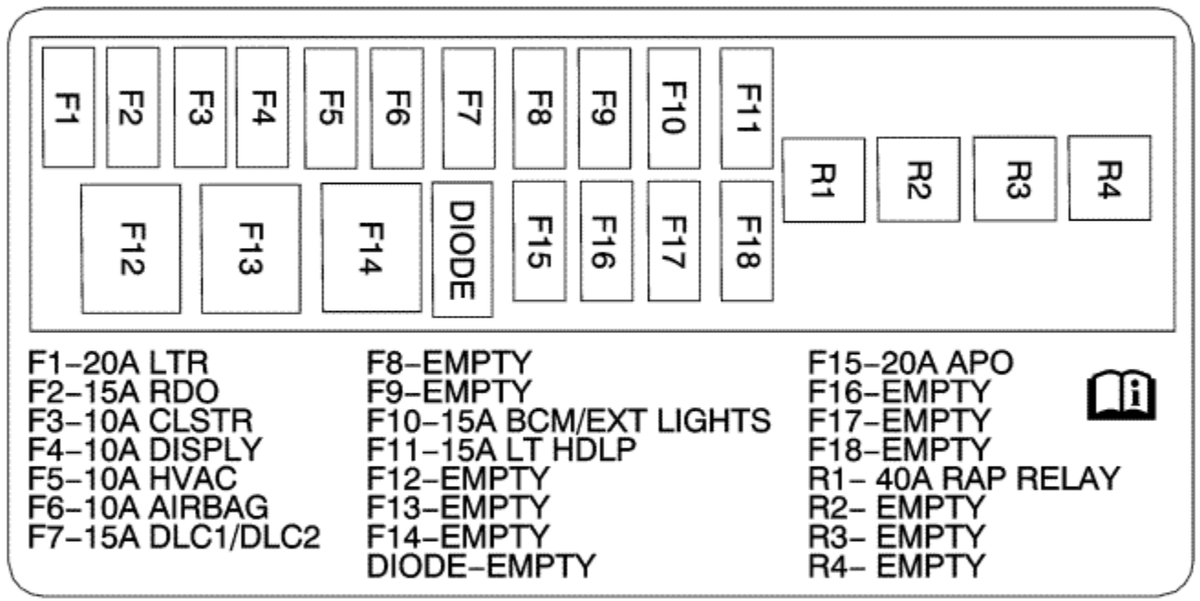

X51L Fuse Block - Instrument Panel Left Label Usage

No.	Device Label Name	Device Assigned Name	Rating	Description
Fuses				

F1	LTR	F1DL	20 A	E32 Cigarette Lighter Receptacle
F2	RDO	F2DL	15 A	A11 Radio
F3	CLSTR	F3DL	10 A	P16 Instrument Cluster
F4	DISPLY	F4DL	10 A	P17 Info Display Module
F5	HVAC	F5DL	10 A	A20 Radio/HVAC Controls, K33 HVAC Control Module
F6	AIRBAG	F6DL	10 A	K36 Inflatable Restraint Sensing and Diagnostic Module, K85 Passenger Presence Detection Module
F7	DLC1/DLC2	F7DL	15 A	X84 Data Link Connector, X84B Auxiliary Data Link Connector
F8	Empty	F8DL	--	Not Used
F9	Empty	F9DL	--	Not Used
F10	BCM/EXT LIGHTS	F10DL	15 A	K9 Body Control Module
F11	LT HDLP	F11DL	15 A	K9 Body Control Module
F12	Empty	F12DL	--	Not Used
F13	Empty	F13DL	--	Not Used
F14	Empty	F14DL	--	Not Used
F15	APO	F115DL	20 A	X80H Accessory Power Recepacle - Centre Console
F16	Empty	F16DL	--	Not Used
F17	Empty	F17DL	--	Not Used
F18	Empty	F18DL	--	Not Used
Diodes				
DIODE	Empty	--	--	Not Used
Relays				
R1	RAP RELAY	KR76 Retained Accessory Power Relay	-	F1DL and F15DL Fuses
R2	Empty	--	--	Not Used
R3	Empty	--	--	Not Used
R4	Empty	--	--	Not Used

© Copyright Chevrolet. All rights reserved

X51L Fuse Block - Instrument Panel Left Top View

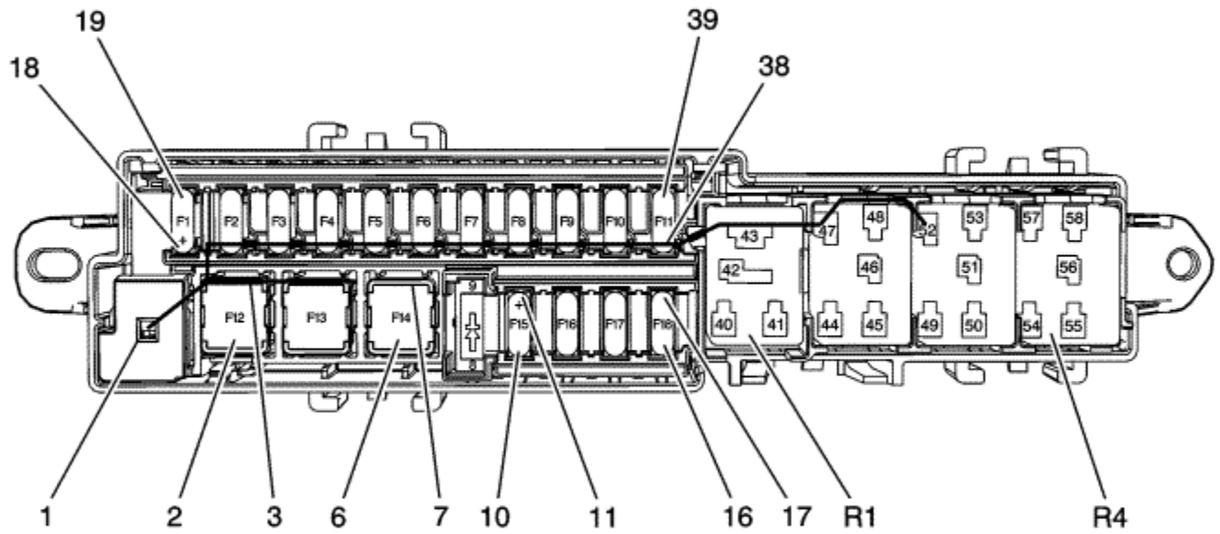

© Copyright Chevrolet. All rights reserved

X51L Fuse Block - Instrument Panel Left Bottom View

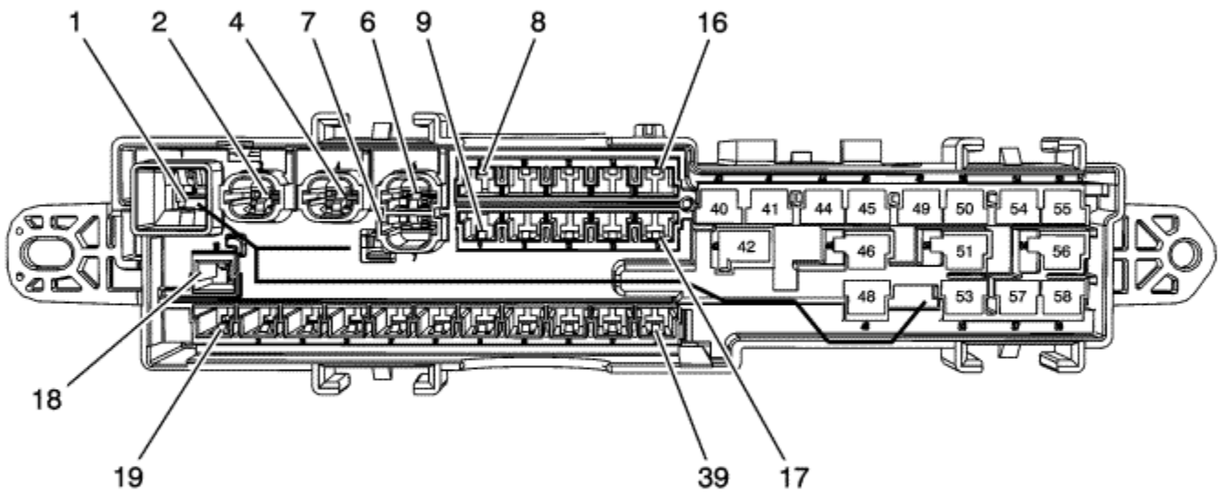

© Copyright Chevrolet. All rights reserved

X51L Fuse Block - Instrument Panel Left Wire Entry

Connector Part Information

Harness Type: Instrument Panel
OEM Connector: 3B0S10200
Service Connector: 20971956
Description: PROD. HOUSING 212 x 41 x 49 mm GM 58 Cavities (BK)

Terminal Part Information

Pins: 1, 10, 27, 29, 31, 39, 42
Terminated Lead: Pending
Release Tool: Pending
Diagnostic Test Probe: Pending
Terminal/Tray: Pending
Core/Insulation Crimp: Pending

Pins: 11, 18, 19, 21
Terminated Lead: Pending
Release Tool: J-38125-11A
Diagnostic Test Probe: J-35616-4A (PU)
Terminal/Tray: 771416-HK200/7
Core/Insulation Crimp: A/D

Pins: 23, 25, 37, 40, 41
Terminated Lead: Pending
Release Tool: J-38125-11A
Diagnostic Test Probe: J-35616-4A (PU)
Terminal/Tray: 771816-HK200/7
Core/Insulation Crimp: C/A

X51L Fuse Block - Instrument Panel Left Wire Entry

Pin	Size	Colour	Circuit	Function	Option
1	6	RD/L-BU	42	Battery Positive Voltage	-
2	--	--	--	Not Used	--
3	--	--	--	Battery Positive Voltage Bus	--
4	--	--	--	Not Used	--
5	--	--	--	Battery Positive Voltage Bus	-

6-9	--	--	--	Not Used	--
10	1	VT	1701	Retained Accessory Power Fuse Supply Voltage	--
	1	VT	1701	Retained Accessory Power Fuse Supply Voltage	--
11	1.5	RD/L-BU	842	Battery Positive Voltage	-
12-17	--	--	--	Not Used	--
18	1.5	RD/L-BU	842	Battery Positive Voltage	-
19	1	VT	1301	Retained Accessory Power Fuse Supply Voltage	-
20	--	--	--	Battery Positive Voltage Bus	--
21	1	RD/YE	5040	Battery Positive Voltage	-
22	--	--	--	Battery Positive Voltage Bus	-
23	0.5	RD/L-GN	502	Battery Positive Voltage	-
24	--	--	--	Battery Positive Voltage Bus	--
25	0.75	RD/VT	5140	Battery Positive Voltage	-
26	--	--	--	Battery Positive Voltage Bus	-
27	0.5	RD/L-GN	742	Battery Positive Voltage	-
28	--	--	--	Battery Positive Voltage Bus	-
29	0.5	RD/BK	2440	Battery Positive Voltage	-
30	--	--	--	Battery Positive Voltage Bus	--
31	0.5	RD/L-GN	1840	Battery Positive Voltage	-
32	--	--	--	Battery Positive Voltage Bus	-
33	--	--	--	Not Used	--
34	--	--	--	Battery Positive Voltage Bus	-
35	--	--	--	Not Used	--
36	--	--	--	Battery Positive Voltage Bus	--
37	0.75	RD/BN	4240	Battery Positive Voltage	-
38	--	--	--	Battery Positive Voltage Bus	--
39	2.5	RD/YE	4340	Battery Positive Voltage	-
40	0.5	VT/YE	43	Accessory Voltage	--
41	0.5	BK	1750	Ground	-
42	2.5	RD/L-BU	842	Battery Positive Voltage	-
43	--	--	--	Battery Positive Voltage Bus	-
44-46	--	--	--	Not Used	--
47	--	--	--	Battery Positive Voltage Bus	-
48-51	--	--	--	Not Used	--

52	--	--	--	Battery Positive Voltage Bus	-
53-58	--	--	--	Not Used	--

© Copyright Chevrolet. All rights reserved

X51R Fuse Block - Instrument Panel Right Label

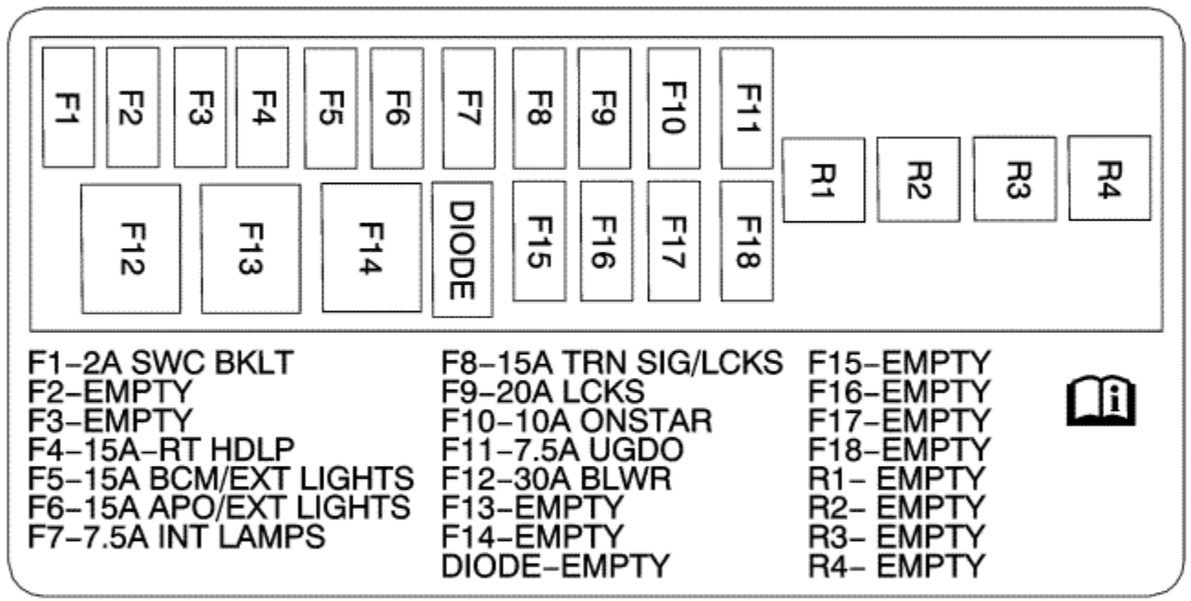

X51R Fuse Block - Instrument Panel Right Label Usage

No.	Device Label Name	Device Assigned Name	Rating	Description
Fuses				
F1	SWC BKLT	F1DR	2 A	S70L Steering Wheel Controls Switch - Left, S70R Steering Wheel Controls Switch - Right

F2	AUX JACK	F2DR	10 A	Not Used
F3	Empty	F3DR	--	Not Used
F4	RT HDLP	F4DR	15 A	K9 Body Control Module
F5	BCM/EXT LIGHTS	F5DR	15 A	K9 Body Control Module
F6	APO/EXT LIGHTS	F6DR	15 A	K9 Body Control Module
F7	INT LAMPS	F7DR	15 A	K9 Body Control Module
F8	DIR IND/LCKS	F8DR	15 A	K9 Body Control Module
F9	LCKS	F9DR	20 A	K9 Body Control Module
F10	ONSTAR/UHP	F10DR	10 A	K73 Telematics Communication Interface Control Module
F11	UGDO	F11DR	7.5 A	S25 Garage Door Opener
F12	BLWR	F12DR	30 A	K8 Blower Control Module
F13	Empty	F13DR	--	Not Used
F14	Empty	F14DR	--	Not Used
F15	Empty	F16DR	--	Not Used
F16	Empty	F16DR	--	Not Used
F17	Empty	F17DR	--	Not Used
F18	Empty	F18DR	--	Not Used
Diodes				
DIODE	Empty	--	--	Not Used
Relays				
R1	Empty	--	--	Not Used
R2	Empty	--	--	Not Used
R3	Empty	--	--	Not Used
R4	Empty	--	--	Not Used

© Copyright Chevrolet. All rights reserved

X51R Fuse Block - Instrument Panel Right Top View

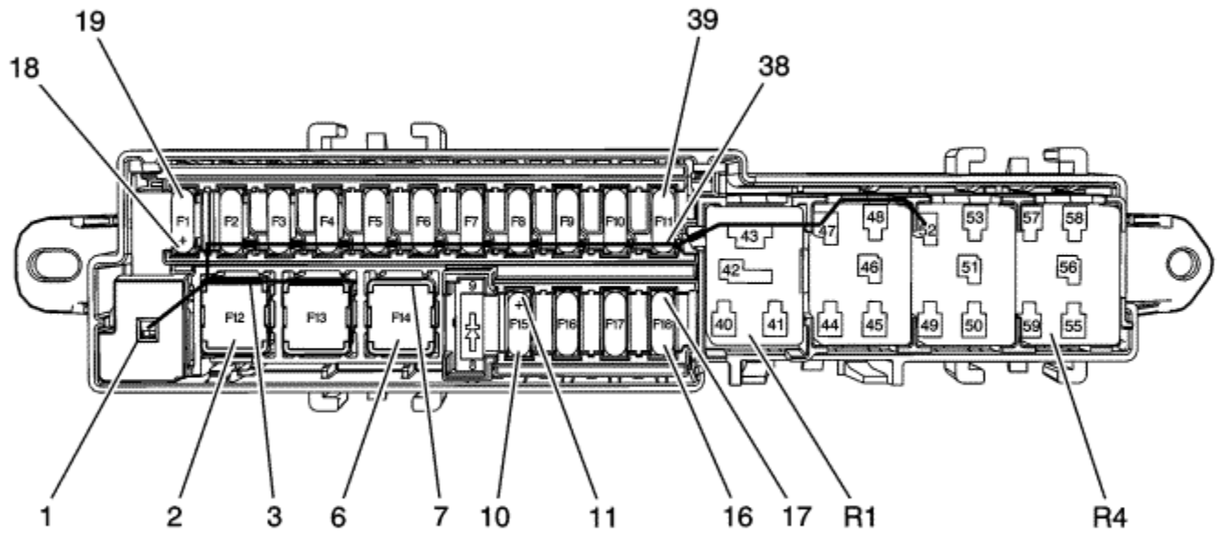

© Copyright Chevrolet. All rights reserved

X51R Fuse Block - Instrument Panel Right Top View

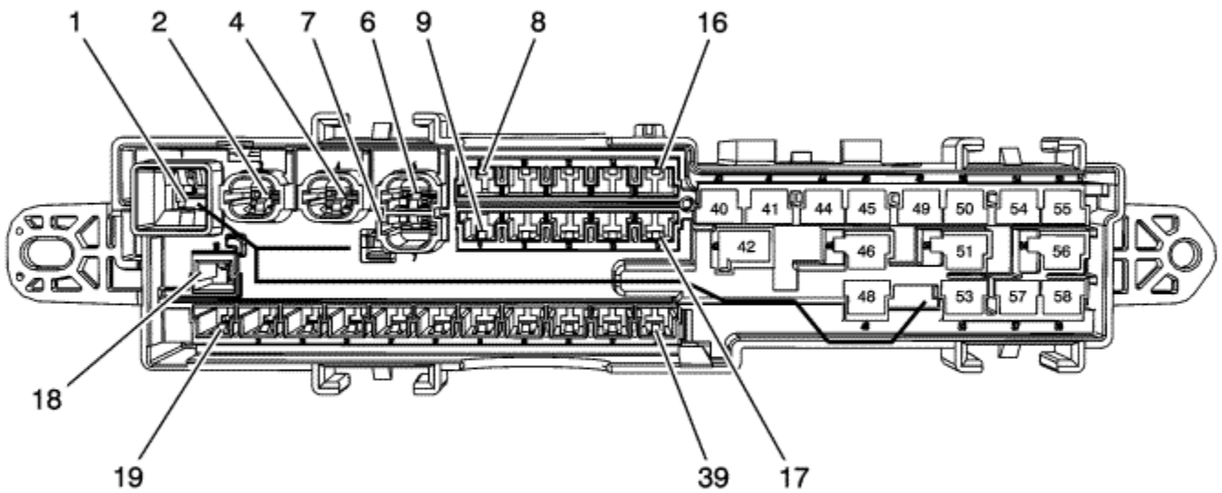

© Copyright Chevrolet. All rights reserved

X51R Fuse Block - Instrument Panel Right Wire Entry

Connector Part Information

Harness Type: Instrument Panel
OEM Connector: 5B0X40307
Service Connector: 20971956
Description: GM EFLEX PDC IEC RH

Terminal Part Information

Pins: 1, 2 and 39
Terminated Lead: Pending
Release Tool: Pending
Diagnostic Test Probe: Pending
Terminal/Tray: Pending
Core/Insulation Crimp: Pending

Pins: 18, 19, 25, 27, 29, 31, 33, 37
Terminated Lead: Pending
Release Tool: J-38125-11A
Diagnostic Test Probe: J-35616-4A (PU)
Terminal/Tray: 771816-HK200/7
Core/Insulation Crimp: C/A

Pins: 35
Terminated Lead: Pending
Release Tool: J-38125-11A
Diagnostic Test Probe: J-35616-4A (PU)
Terminal/Tray: 771416-HK200/7
Core/Insulation Crimp: A/D

X51R Fuse Block - Instrument Panel Right Wire Entry

Pin	Size	Colour	Circuit	Function	Option
1	8	RD/GY	142	Battery Positive Voltage	-
2	4	RD/L-BU	840	Battery Positive Voltage	--
3	--	--	--	Battery Positive Voltage Bus	--
4	--	--	--	Not Used	--
5	--	--	--	Battery Positive Voltage Bus	-

6-17	--	--	--	Not Used	--
18	0.5	YE	6817	LED Backlight Dimming Control	-
19	0.5	YE	6817	LED Backlight Dimming Control	-
20	--	--	--	Battery Positive Voltage Bus	-
21	--	--	--	Not Used	--
22	--	--	--	Battery Positive Voltage Bus	-
23	--	--	--	Not Used	--
24	--	--	--	Battery Positive Voltage Bus	--
25	0.75	RD/L-GN	4440	Battery Positive Voltage	-
26	--	--	--	Battery Positive Voltage Bus	--
27	0.75	RD/L-BU	4540	Battery Positive Voltage	-
28	--	--	--	Battery Positive Voltage Bus	--
29	0.75	RD/VT	4640	Battery Positive Voltage	-
30	--	--	--	Battery Positive Voltage Bus	--
31	0.75	RD/GY	4140	Battery Positive Voltage	-
32	--	--	--	Battery Positive Voltage Bus	-
33	0.75	RD/GY	4840	Battery Positive Voltage	--
34	--	--	--	Battery Positive Voltage Bus	-
35	1	RD/BN	4940	Battery Positive Voltage	-
36	--	--	--	Battery Positive Voltage Bus	-
37	0.5	RD/VT	2640	Battery Positive Voltage	-
38	--	--	--	Battery Positive Voltage Bus	--
39	0.35	RD/YE	740	Battery Positive Voltage	-
40-42	--	--	--	Not Used	--
43	--	--	--	Battery Positive Voltage Bus	-
44-46	--	--	--	Not Used	--
47	--	--	--	Battery Positive Voltage Bus	-
48-51	--	--	--	Not Used	--
52	--	--	--	Battery Positive Voltage Bus	-
53-58	--	--	--	Not Used	--

© Copyright Chevrolet. All rights reserved

X50D Fuse Block - Battery Top View

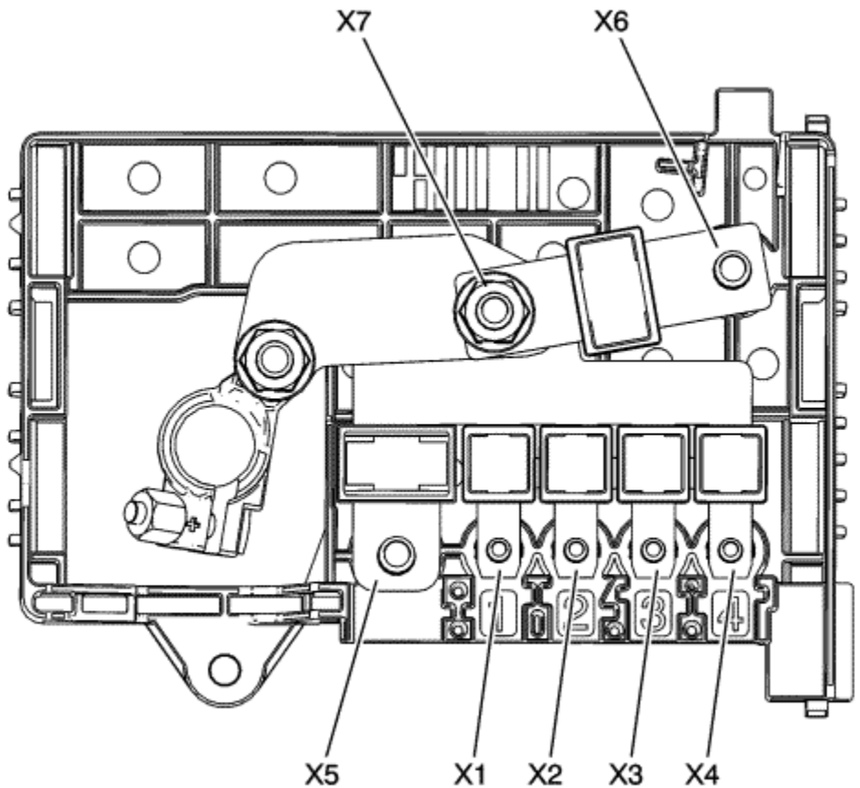

X50D Fuse Block - Battery Usage

No.	Device Label Name	Device Assigned Name	Rating	Description
1	--	F1RB	80 A	X51L Fuse Block Instrument Panel - Left
2	--	F2RB	80 A	X51R Fuse Block Instrument Panel - Right

3	--	F3RB	80 A	X53A Fuse Block - Rear Body
4	-	F4RB	100 A	Not Used
--	--	F5RB	150 A	X50B Fuse Block - Underbonnet Auxiliary
--	--	F6RB	200 A	C1 Battery, F1RB, F2RB, F3RB, F4RB and F5RB Fuses

© Copyright Chevrolet. All rights reserved

X50D Fuse Block - Battery X1

Connector Part Information

Harness Type: Body
OEM Connector: Not Available
Service Connector: Pending
Description: 1-Way Ring

Terminal Part Information

Terminated Lead: Service by Connector Assembly - Pending
Release Tool: No Tool Reqd
Diagnostic Test Probe: No Tool Reqd
Terminal/Tray: Pending
Core/Insulation Crimp: Pending

X50D Fuse Block - Battery X1

Pin	Size	Colour	Circuit	Function	Option
A	6	RD/L-BU	42	Battery Positive Voltage	-

© Copyright Chevrolet. All rights reserved

X50D Fuse Block - Battery X2

Connector Part Information

Harness Type: Body
OEM Connector: Not Available
Service Connector: Pending
Description: 1-Way Ring

Terminal Part Information

Terminated Lead: Service by Connector Assembly - Pending
Release Tool: No Tool Reqd
Diagnostic Test Probe: No Tool Reqd
Terminal/Tray: Pending
Core/Insulation Crimp: Pending

X50D Fuse Block - Battery X2

Pin	Size	Colour	Circuit	Function	Option
A	8	RD/GY	142	Battery Positive Voltage	-

© Copyright Chevrolet. All rights reserved

X50D Fuse Block - Battery X3

Connector Part Information

Harness Type: Body
OEM Connector: Not Available
Service Connector: Pending
Description: 1-Way Ring

Terminal Part Information

Terminated Lead: Service by Connector Assembly - Pending
Release Tool: No Tool Reqd
Diagnostic Test Probe: No Tool Reqd
Terminal/Tray: Pending
Core/Insulation Crimp: Pending

X50D Fuse Block - Battery X3

Pin	Size	Colour	Circuit	Function	Option
A	8	RD/VT	102	Battery Positive Voltage	-

© Copyright Chevrolet. All rights reserved

X50D Fuse Block - Battery X5

Connector Part Information

Harness Type: Not Available
OEM Connector: Not Available
Service Connector: Pending
Description: 1-Way Ring

Terminal Part Information

Terminated Lead: Service by Connector Assembly - Pending
Release Tool: No Tool Reqd
Diagnostic Test Probe: No Tool Reqd
Terminal/Tray: Pending
Core/Insulation Crimp: Pending

X50D Fuse Block - Battery X5

Pin	Size	Colour	Circuit	Function	Option
A	25	RD	40	Battery Positive Voltage	-

© Copyright Chevrolet. All rights reserved

X50D Fuse Block - Battery X6

Connector Part Information

Harness Type: Not Available
OEM Connector: Not Available
Service Connector: Pending
Description: 1-Way Ring

Terminal Part Information

Terminated Lead: Service by Connector Assembly - Pending
Release Tool: No Tool Reqd
Diagnostic Test Probe: No Tool Reqd
Terminal/Tray: Pending
Core/Insulation Crimp: Pending

X50D Fuse Block - Battery X6

Pin	Size	Colour	Circuit	Function	Option
A	20	RD/YE	2	Battery 14 V Power Supply	-

© Copyright Chevrolet. All rights reserved

X53A Fuse Block - Rear Body Label

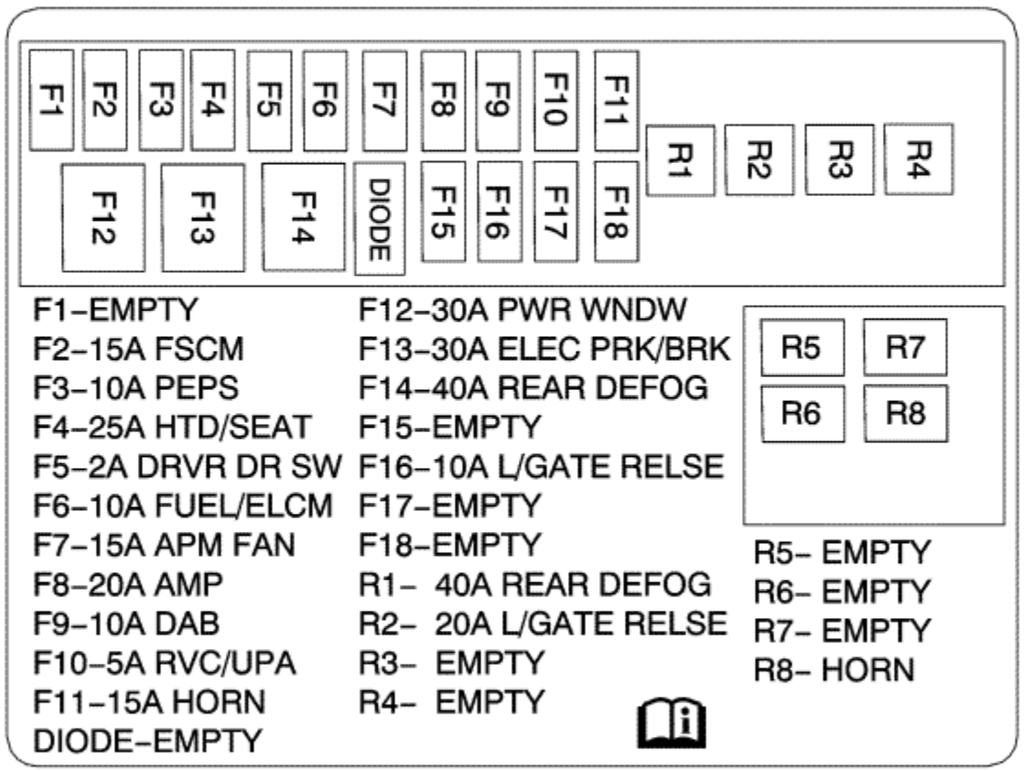

X53A Fuse Block - Rear Body Label Usage

No.	Device Label Name	Device Assigned Name	Rating	Description
Fuses				

F1	Empty	F1RA	--	Not Used
F2	FSCM	F2RA	15 A	K27 Fuel Pump Control Module
F3	PEPS	F3RA	10 A	K84 Keyless Entry Control Module
F4	HTD/SEAT	F4RA	25 A	K29 Heated Seating Contol Module
F5	Empty	F5RA	20 A	S52 Outside Rear-view Mirror Switch, S79D Window Switch - Driver, S113 Charge Port Door Unlatch Switch, S117 Refuel Request Switch
F6	FUEL/ELCM	F6RA	10 A	Q13 Evaporative Emission Vent Solenoid Valve, Q63 Evaporative Emission System Leak Detection Pump Assembly
F7	APM FAN	F7RA	15 A	G38 14V Power Module Cooling Fan
F8	AMP	F8RA	20 A	T3 Audio Amplifier
F9	URPA	F9RA	10 A	Not Used
F10	RVC	F10RA	5 A	K9 Body Control Module, K41 Parking Assist Control Module
F11	HORN	F11RA	15 A	KR3 Horn Relay
F12	PWR WNDW	F12RA	30 A	S79LR Window Switch - Left Rear, S79RR Window Switch - Right Rear
F13	ELEC PRK/BRK	F13RA	30 A	K83 Parking Brake Control Module
F14	REAR DEMIST	F14RA	40 A	E18A Rear Demisting Grid - Upper
F15	Empty	F16RA	--	Not Used
F16	L/GATE RELESE	F16RA	10 A	A23C Tailgate Latch Assembly
F17	Empty	F17RA	--	Not Used
F18	Empty	F18RA	--	Not Used
Diodes				
DIODE	Empty	--	--	Not Used
Relays				
R1	REAR DEMIST	KR5 Rear Demister Relay	40 A	F14RA Fuse
R2	L/GATE RELESE	KR95A Tailgate Release Relay	20 A	F16RA Fuse
R3	Empty	-	20 A	Not Used
R4	Empty	-	20 A	Not Used
R5	Empty	--	--	Not Used
R6	Empty	--	--	Not Used
R7	Empty	--	--	Not Used
R8	HORN	KR3 Horn Relay	-	P12L Horn - Left, P12R Horn - Right

© Copyright Chevrolet. All rights reserved

X53A Fuse Block - Rear Body Top View

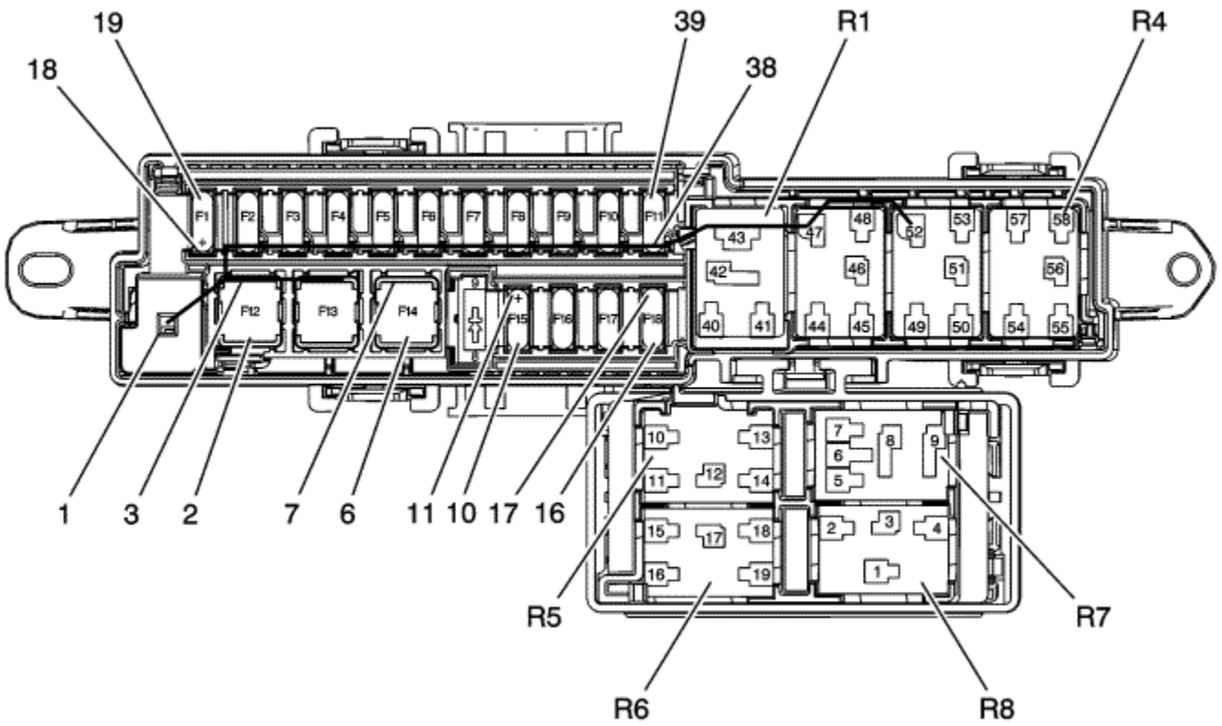

© Copyright Chevrolet. All rights reserved

X53A Fuse Block - Rear Body Bottom View

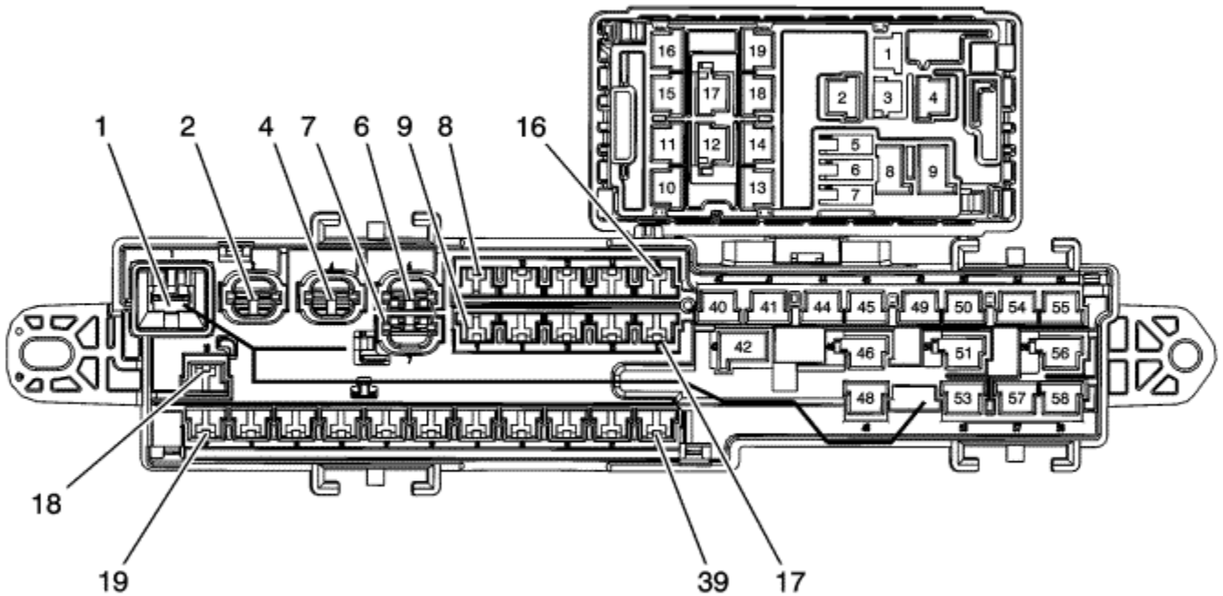

© Copyright Chevrolet. All rights reserved

X53A Fuse Block - Rear Body Wire Entry (Fuses)

Connector Part Information

Harness Type: Body
OEM Connector: 3B0S70200
Service Connector: 20971956
Description: PROD. CASSETTE HSG

Terminal Part Information

Pins: 1, 4
Terminated Lead: Pending
Release Tool: J-38125-11A
Diagnostic Test Probe: J-35616-4A (PU)
Terminal/Tray: 772216-HK200/25
Core/Insulation Crimp: E/C

Pins: 2, 21, 25, 39
Terminated Lead: Pending
Release Tool: J-38125-11A
Diagnostic Test Probe: J-35616-4A (PU)
Terminal/Tray: 771416-HK200/7
Core/Insulation Crimp: A/D

Pins: 1-4, 6, 7, 23, 27, 33, 42
Terminated Lead: Pending
Release Tool: J-38125-11A
Diagnostic Test Probe: J-35616-4A (PU)
Terminal/Tray: Pending
Core/Insulation Crimp: Pending

Pins: 12, 13, 29, 31, 37, 40, 41, 44, 45, 48
Terminated Lead: Pending
Release Tool: J-38125-11A
Diagnostic Test Probe: J-35616-4A (PU)
Terminal/Tray: 771816-HK200/7
Core/Insulation Crimp: C/A

X53A Fuse Block - Rear Body Wire Entry (Fuses)

Pin	Size	Colour	Circuit	Function	Option
1	8	RD/VT	102	Battery Positive Voltage	-
2	2	RD/YE	3740	Battery Positive Voltage	-
	2	RD/YE	3740	Battery Positive Voltage	--
3	--	--	--	Battery Positive Voltage Bus	-
4	3	RD/L-BU	1842	Battery Positive Voltage	--
5	--	--	--	Battery Positive Voltage Bus	--
6	4	BN/VT	293	Rear Defog Element Supply Voltage	-
7	4	BN/VT	293	Rear Defog Element Supply Voltage	-
8-11	--	--	--	Not Used	--
12	0.75	L-BU/WH	6128	Rear Closure Unlatch Motor Unlatch Control	--
13	0.75	L-BU/WH	6128	Rear Closure Unlatch Motor Unlatch Control	-
14-19	--	--	--	Not Used	--
20	--	--	--	Battery Positive Voltage Bus	--
21	1	RD/L-GN	1540	Battery Positive Voltage	-
22	--	--	--	Battery Positive Voltage Bus	--
23	0.35	RD/WH	4042	Battery Positive Voltage	-
	0.5	RD/WH	4042	Battery Positive Voltage	-
24	--	--	--	Battery Positive Voltage Bus	--
25	1	RD/GY	1740	Battery Positive Voltage	-
26	--	--	--	Battery Positive Voltage Bus	--
27	0.35	RD/WH	4740	Battery Positive Voltage	-
28	--	--	--	Battery Positive Voltage Bus	-
29	0.5	RD/WH	1340	Battery Positive Voltage	-
30	--	--	--	Battery Positive Voltage Bus	--
31	0.5	RD/BN	2240	Battery Positive Voltage	-
32	--	--	--	Battery Positive Voltage Bus	-
33	2.5	RD/BN	1140	Battery Positive Voltage	--
34	--	--	--	Battery Positive Voltage Bus	-
35	--	--	--	Not Used	--
36	--	--	--	Battery Positive Voltage Bus	-
37	0.5	RD/GY	2840	Battery Positive Voltage	-
	0.5	RD/GY	2840	Battery Positive Voltage	-
38	--	--	--	Battery Positive Voltage Bus	--

39	2	RD/L-BU	2540	Battery Positive Voltage	-

© Copyright Chevrolet. All rights reserved

X53A Fuse Block - Rear Body Wire Entry (Relays)

Connector Part Information

Harness Type: Body
OEM Connector: 3B0S70200
Service Connector: 20971956
Description: PROD. CASSETTE HSG

Terminal Part Information

Pins: 1, 4
Terminated Lead: Pending
Release Tool: J-38125-11A
Diagnostic Test Probe: J-35616-4A (PU)
Terminal/Tray: 772216-HK200/25
Core/Insulation Crimp: E/C

Pins: 2, 21, 25, 39
Terminated Lead: Pending
Release Tool: J-38125-11A
Diagnostic Test Probe: J-35616-4A (PU)
Terminal/Tray: 771416-HK200/7
Core/Insulation Crimp: A/D

Pins: 1-4, 6, 7, 23, 27, 33, 42
Terminated Lead: Pending
Release Tool: J-38125-11A
Diagnostic Test Probe: J-35616-4A (PU)
Terminal/Tray: Pending
Core/Insulation Crimp: Pending

Pins: 12, 13, 29, 31, 37, 40, 41, 44, 45, 48
Terminated Lead: Pending
Release Tool: J-38125-11A
Diagnostic Test Probe: J-35616-4A (PU)
Terminal/Tray: 771816-HK200/7
Core/Insulation Crimp: C/A

X53A Fuse Block - Rear Body Wire Entry (Relays)

Pin	Size	Colour	Circuit	Function	Option
1	0.35	BK	1450	Ground	-
2	2	RD/L-BU	2540	Battery Positive Voltage	--
3	2.5	BN/GY	29	Horn Control	-
4	0.35	BN/WH	28	Horn Relay Control	-
5-19	--	--	--	Not Used	--
40	0.5	BK	650	Ground	--
41	0.5	BN/VT	193	Rear Demist Relay Control	-
42	4	BN/VT	293	Rear Defog Element Supply Voltage	-
43	--	--	--	Battery Positive Voltage Bus	-
44	0.5	L-GN/BN	5706	Endgate Latch Relay Supply Voltage	-
45	0.75	L-BU/WH	6128	Rear Closure Unlatch Motor Unlatch Control	-
46	--	--	--	Not Used	--
47	--	--	--	Battery Positive Voltage Bus	--
48	0.5	BK	650	Ground	--
49-51	--	--	--	Not Used	--
52	--	--	--	Battery Positive Voltage Bus	-
53-58	--	--	--	Not Used	--

© Copyright Chevrolet. All rights reserved

A24D Door Handle Assembly - Driver Exterior

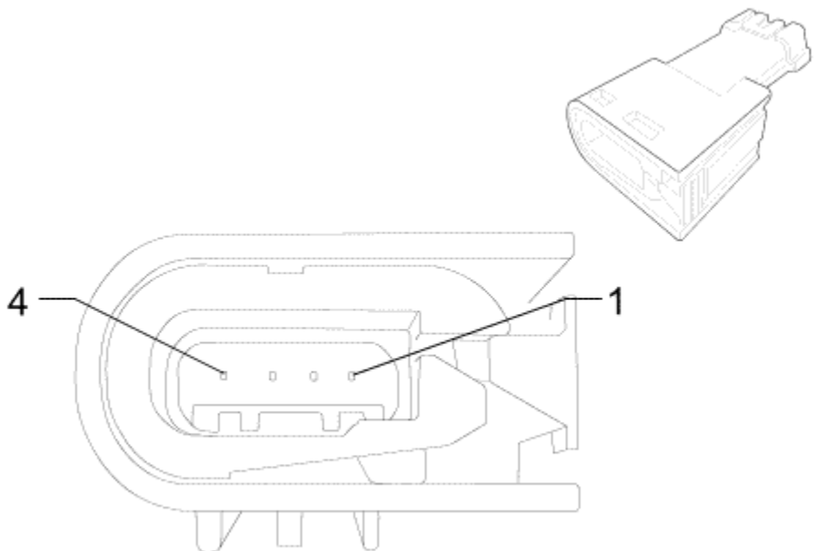

Connector Part Information

Harness Type: Driver Door
OEM Connector: 19153433
Service Connector: 13578576
Description: 4-Way M 0.64 Series, Sealed (BK)

Terminal Part Information

Terminated Lead: Service by Harness - See Part Catalog
Release Tool: J-38125-215A
Diagnostic Test Probe: J-35616-65B (L-BU)

A24D Door Handle Assembly - Driver Exterior

Pin	Size	Colour	Circuit	Function	Option
1	0.5	VT/GY	218	Keyless Entry Aerial Signal (1)	-

2	0.5	BK/BN	219	Keyless Entry Aerial Low Reference (1)	--
3	0.5	L-GN/WH	3570	Door Handle Switch - Driver's Signal	--
4	0.5	BK	1550	Ground	-

© Copyright Chevrolet. All rights reserved

A24P Door Handle Assembly - Passenger Exterior

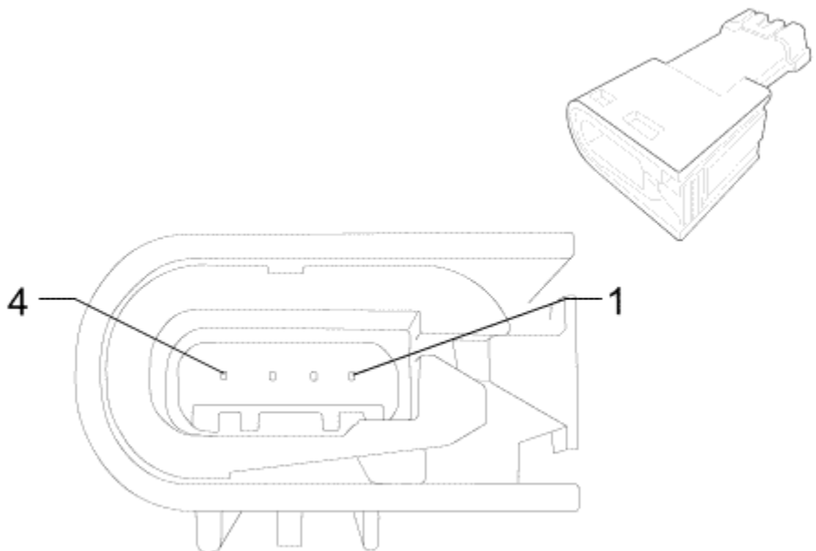

Connector Part Information

Harness Type: Passenger Door
OEM Connector: 19153433
Service Connector: 13578576
Description: 4-Way M 0.64 Series, Sealed (BK)

Terminal Part Information

Terminated Lead: Service by Harness - See Part Catalog
Release Tool: J-38125-215A
Diagnostic Test Probe: J-35616-65B (L-BU)

A24P Door Handle Assembly - Passenger Exterior

Pin	Size	Colour	Circuit	Function	Option
1	0.5	L-GN	5707	Keyless Entry Aerial Signal (2)	-

2	0.5	BK/L-GN	5711	Keyless Entry Aerial Low Reference (2)	--
3	0.5	VT/WH	3571	Door Handle Switch - Passenger Signal	--
4	0.5	BK	2050	Ground	-

© Copyright Chevrolet. All rights reserved

A24LR Door Handle Assembly - Left Rear Exterior

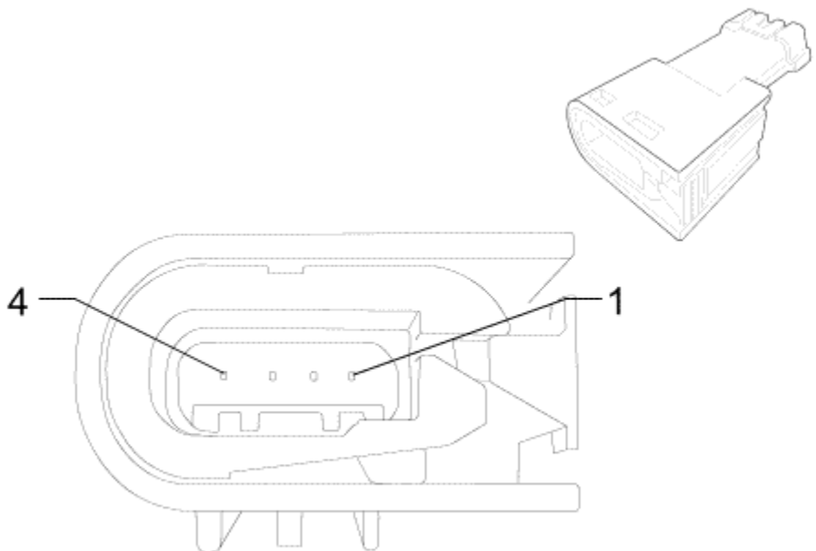

Connector Part Information

Harness Type: Left Rear Door
OEM Connector: 19153433
Service Connector: 13578576
Description: 4-Way M 0.64 Series, Sealed (BK)

Terminal Part Information

Terminated Lead: Service by Harness - See Part Catalog
Release Tool: J-38125-215A
Diagnostic Test Probe: J-35616-65B (L-BU)

A24LR Door Handle Assembly - Left Rear Exterior

Pin	Size	Colour	Circuit	Function	Option
1	0.5	BK	900	Not Used	-

2	0.5	BK	900	Not Used	--
3	0.5	BN/YE	6157	Door Handle Switch - Left Rear Signal	--
4	0.5	BK	650	Ground	-

© Copyright Chevrolet. All rights reserved

A24RR Door Handle Assembly - Right Rear Exterior

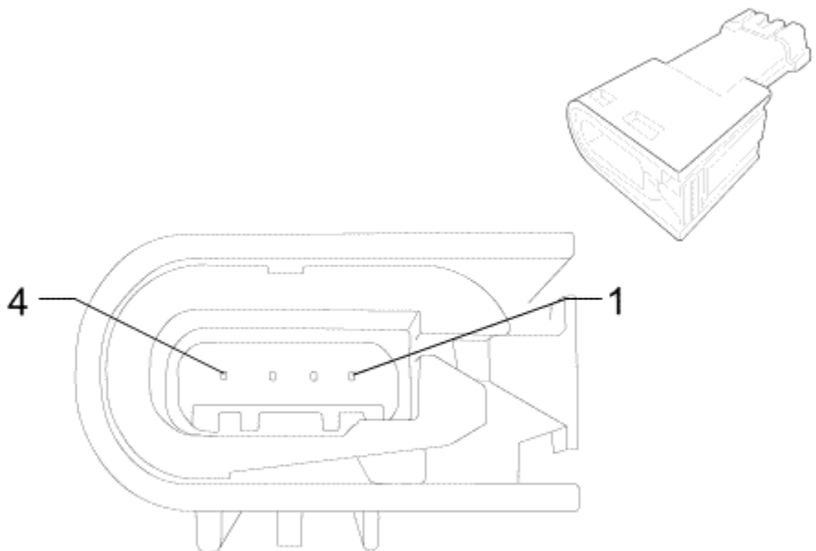

Connector Part Information

Harness Type: Right Rear Door
OEM Connector: 19153433
Service Connector: 13578576
Description: 4-Way M 0.64 Series, Sealed (BK)

Terminal Part Information

Terminated Lead: Service by Harness - See Part Catalog
Release Tool: J-38125-215A
Diagnostic Test Probe: J-35616-65B (L-BU)

A24RR Door Handle Assembly - Right Rear Exterior

Pin	Size	Colour	Circuit	Function	Option
1	0.5	BK	901	Not Used	-

2	0.5	BK	901	Not Used	--
3	0.5	YE/GY	6158	Door Handle Switch - Left Rear Signal	--
4	0.5	BK	1450	Ground	-

© Copyright Chevrolet. All rights reserved

A28 Hybrid Battery Contactor Assembly

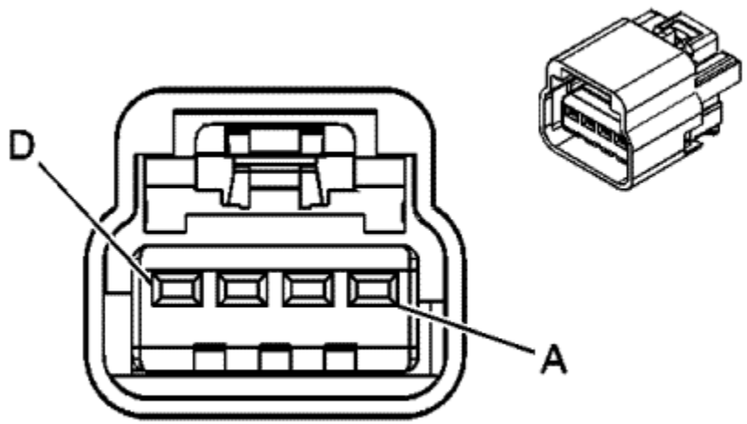

Connector Part Information

Harness Type: Hybrid Battery
OEM Connector: 15332135
Service Connector: 15306414
Description: 4-Way F GT 150 Series (BK)

Terminal Part Information

Terminated Lead: 13575735
Release Tool: J-38125-553
Diagnostic Test Probe: J-35616-2A (GY)

A28 Hybrid Battery Contactor Assembly

Pin	Size	Colour	Circuit	Function	Option
A	0.5	VT	5087	High-Voltage Interlock Loop Signal (1)	-
B	0.5	VT/WH	5087	High-Voltage Interlock Loop Signal (1)	-
C	0.5	GY/VT	5595	High-Voltage Interlock Loop Signal (2)	--
D	0.5	GY	5595	High-Voltage Interlock Loop Signal (2)	-

© Copyright Chevrolet. All rights reserved

K16 Battery Energy Control Module X1

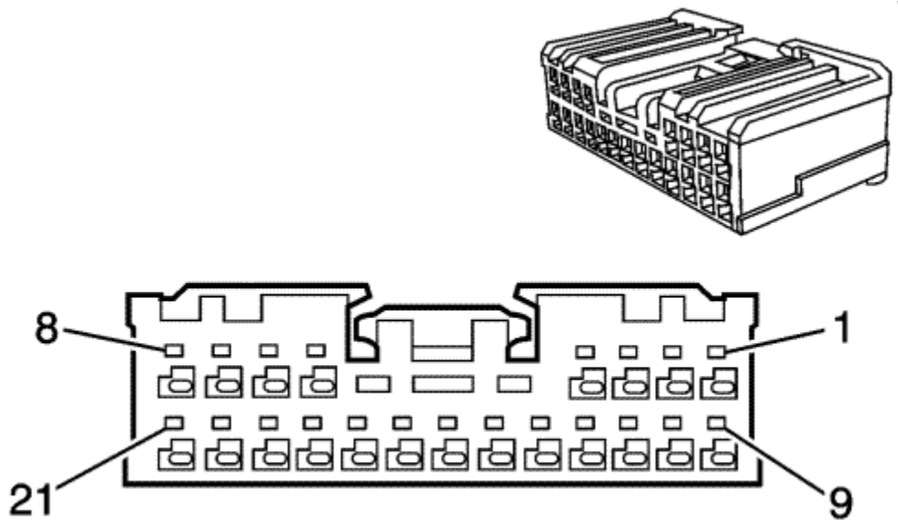

Connector Part Information

Harness Type: Contactor Assembly
OEM Connector: ALTPB-21-2BH
Service Connector: Service by Part Assembly - See Part Catalogue
Description: 21-Way F (GY)

Terminal Part Information

Terminated Lead: Service by Part Assembly - See Part Catalogue
Release Tool: Not Available
Diagnostic Test Probe: Pending

K16 Battery Energy Control Module X1

Pin	Size	Colour	Circuit	Function	Option
1	0.5	BK	2050	Ground	--
2	0.5	RD	1640	Battery Positive Voltage	--
3	0.5	WH/BK	-	Data Communication (-)	-

4	0.5	L-BU	-	Data Communication (+)	--
5	0.5	OG	-	Coolant Inlet Temperature Sensor (+)	—
6	0.5	YE	-	Coolant Inlet Temperature Sensor (-)	--
7	0.5	L-BU	-	Coolant Outlet Temperature Sensor (+)	--
8	0.5	VT	-	Coolant Outlet Temperature Sensor (-)	--
9	0.5	L-GN	-	Case Ground	--
10	0.5	GY	2501	High Speed GMLAN Serial Data (-) (1)	-
11	0.5	WH	2501	High Speed GMLAN Serial Data (-) (1)	-
12	0.5	PK	2500	High Speed GMLAN Serial Data (+) (1)	-
13	0.5	TN	2500	High Speed GMLAN Serial Data (+) (1)	-
14	0.5	BN/RD	3977	Accessory Wake-up Serial Data 2	--
15	0.5	OG/YE	139	Run/Crank Ignition 1 Voltage	-
16	0.5	L-GN/L-BU	3787	High-Voltage Energy Management Communication Enable	-
17-20	--	--	--	Not Used	--
21	0.5	VT/GY	5139	High-Voltage Fault Signal	-

© Copyright Chevrolet. All rights reserved

K16 Battery Energy Control Module X2

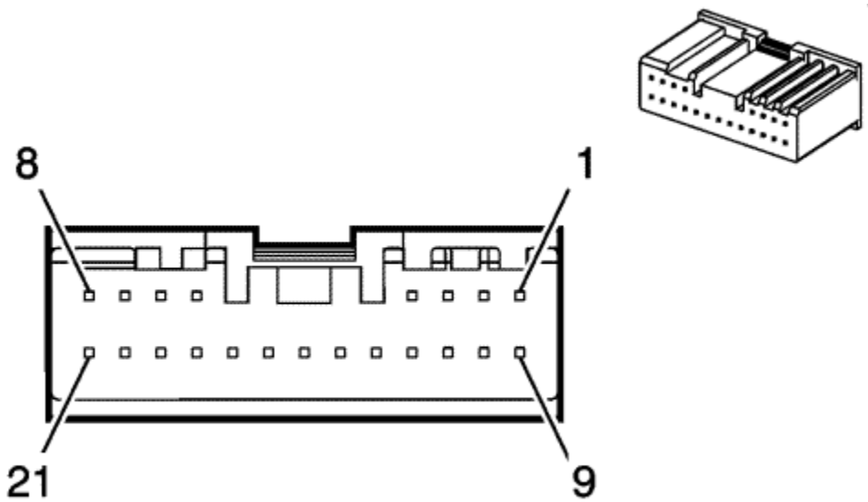

Connector Part Information

Harness Type: Hybrid Battery
OEM Connector: ATLPB-21-2AK
Service Connector: Service by Harness - See Part Catalog
Description: 21-Way F (BK)

Terminal Part Information

Terminated Lead: 13575867
Release Tool: J-38125-215A
Diagnostic Test Probe: J-35616-64B (L-BU)

K16 Battery Energy Control Module X2

Pin	Size	Colour	Circuit	Function	Option
1	0.5	VT/RD	2965	High-Voltage Battery Current Sensor Voltage Reference	-
2	0.5	BK/GY	2963	Low Reference	--
3	0.5	L-BU/YE	2962	High-Voltage Battery Current Sensor Course Signal	-

4	0.5	L-GN/BN	2961	High-Voltage Battery Current Sensor Fine Signal	-
5-8	--	--	--	Not Used	--
9	0.5	GY/RD	705	5 Volt Reference	--
10	0.5	BK/VT	470	Low Reference	--
11	0.5	WH/YE	6435	CAN Bus Low #2 Serial Data	-
12	0.5	L-BU/YE	6434	CAN Bus High #2 Serial Data	-
13	0.5	L-BU	5139	High-Voltage Fault Signal	-
14-21	--	--	--	Not Used	--

© Copyright Chevrolet. All rights reserved

K16 Battery Energy Control Module X3

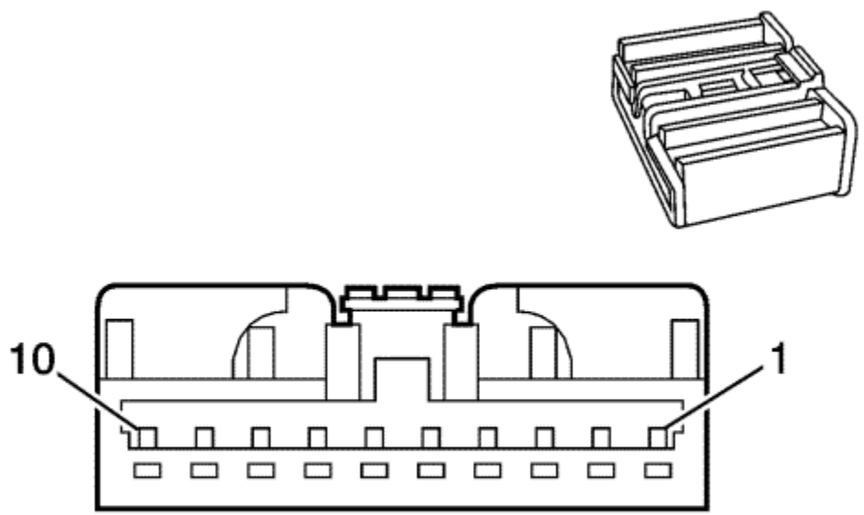

Connector Part Information

Harness Type: Contactor Assembly
OEM Connector: AIT2PB-10-1AD
Service Connector: Service by Part Assembly - See Part Catalogue
Description: 10-Way F (OG)

Terminal Part Information

Terminated Lead: Service by Part Assembly - See Part Catalogue
Release Tool: Not Available
Diagnostic Test Probe: Pending

K16 Battery Energy Control Module X3

Pin	Size	Colour	Circuit	Function	Option
1	0.5	OG	-	KR34B Hybrid/EV Battery Positive Contactor Status	-
2-3	--	--	--	Not Used	--
4	0.5	GY	-	KR34A Hybrid/EV Battery Negative Contactor Status	-

5-6	--	--	--	Not Used	--
7	0.5	L-GN	-	KR34A Hybrid/EV Battery Negative Contactor Status	-
8-9	--	--	--	Not Used	--
10	0.5	RD	-	KR34B Hybrid/EV Battery Positive Contactor Status	-

© Copyright Chevrolet. All rights reserved

B208 Fuel Door Status Switch Assembly

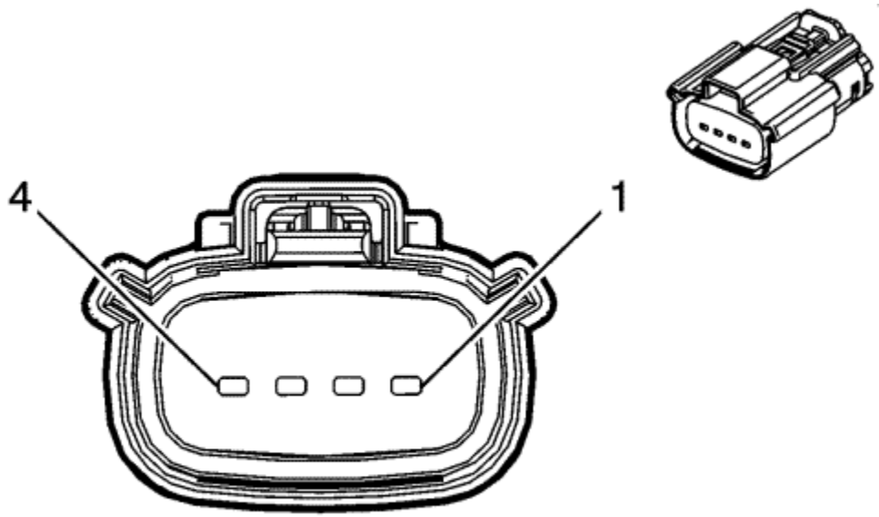

Connector Part Information

Harness Type: Body
OEM Connector: 33471-0406
Service Connector: 13577535
Description: 4-Way F MX150 Series, Sealed (BK)

Terminal Part Information

Terminated Lead: Service by Connector Assembly - Pending
Release Tool: J-38125-217
Diagnostic Test Probe: J-35616-14 (GN)

B208 Fuel Door Status Switch Assembly

Pin	Size	Colour	Circuit	Function	Option
1	0.5	L-BU/BK	6502	Fuel Door Open Signal	-
2	0.5	BK	850	Ground	--
3	0.5	YE/BK	3829	Fuel Door Status Signal	--

4	0.5	BK	850	Ground	-

© Copyright Chevrolet. All rights reserved

X906 Liftgate Jumper Harness to Liftgate Harness

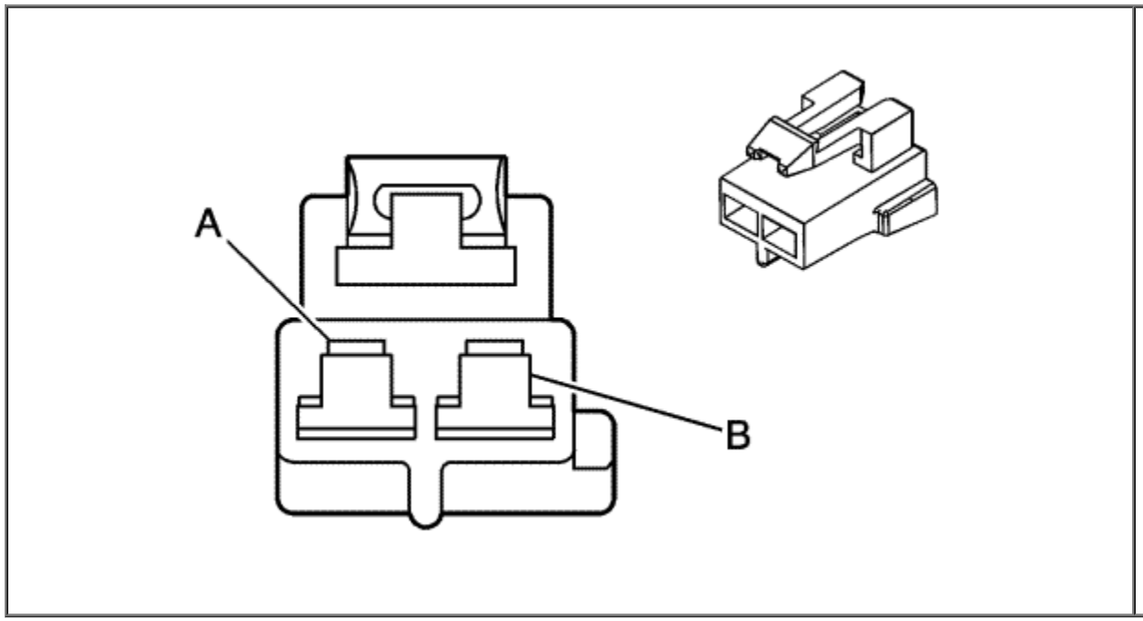

Connector Part Information

Harness Type: Tailgate Jumper
OEM Connector: 12064749
Service Connector: 12101888
Description: 2-Way F Metri-Pack 480 Series (BK)

Terminal Part Information

Terminated Lead: Service by Harness - See Part Catalog
Release Tool: J-38125-11A
Diagnostic Test Probe: J-35616-40 (BU)

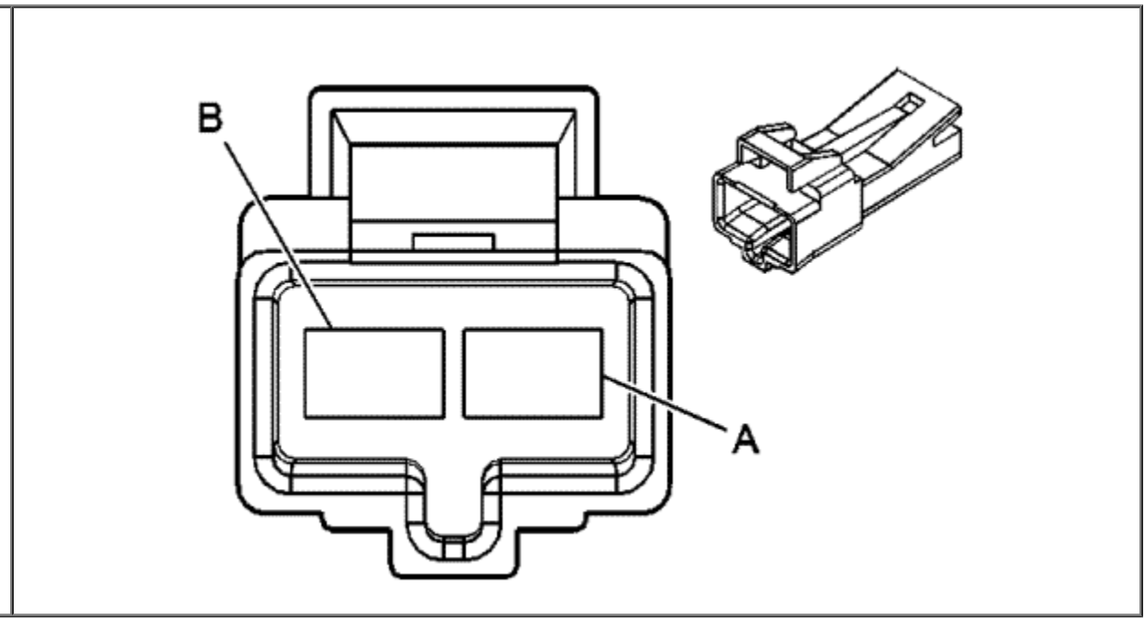

Connector Part Information

Harness Type: Liftgate
OEM Connector: 12064750
Service Connector: 12101935
Description: 2-Way M Metri-Pack 480 Series (BK)

Terminal Part Information

Terminated Lead: Service by Harness - See Part Catalog
Release Tool: J-38125-11A
Diagnostic Test Probe: J-35616-40 (BU)

X906 Liftgate Jumper Harness to Liftgate Harness

Pin	Size	Colour	Circuit	Option	Function	Pin	Size	Colour	Circuit	Option
A	4	BN/VT	293	-	Rear Defog Element Supply Voltage	A	4	BK	293	-
B	4	BK	650	--	Ground	B	4	BK	650	-

© Copyright Chevrolet. All rights reserved

Front Park Assist

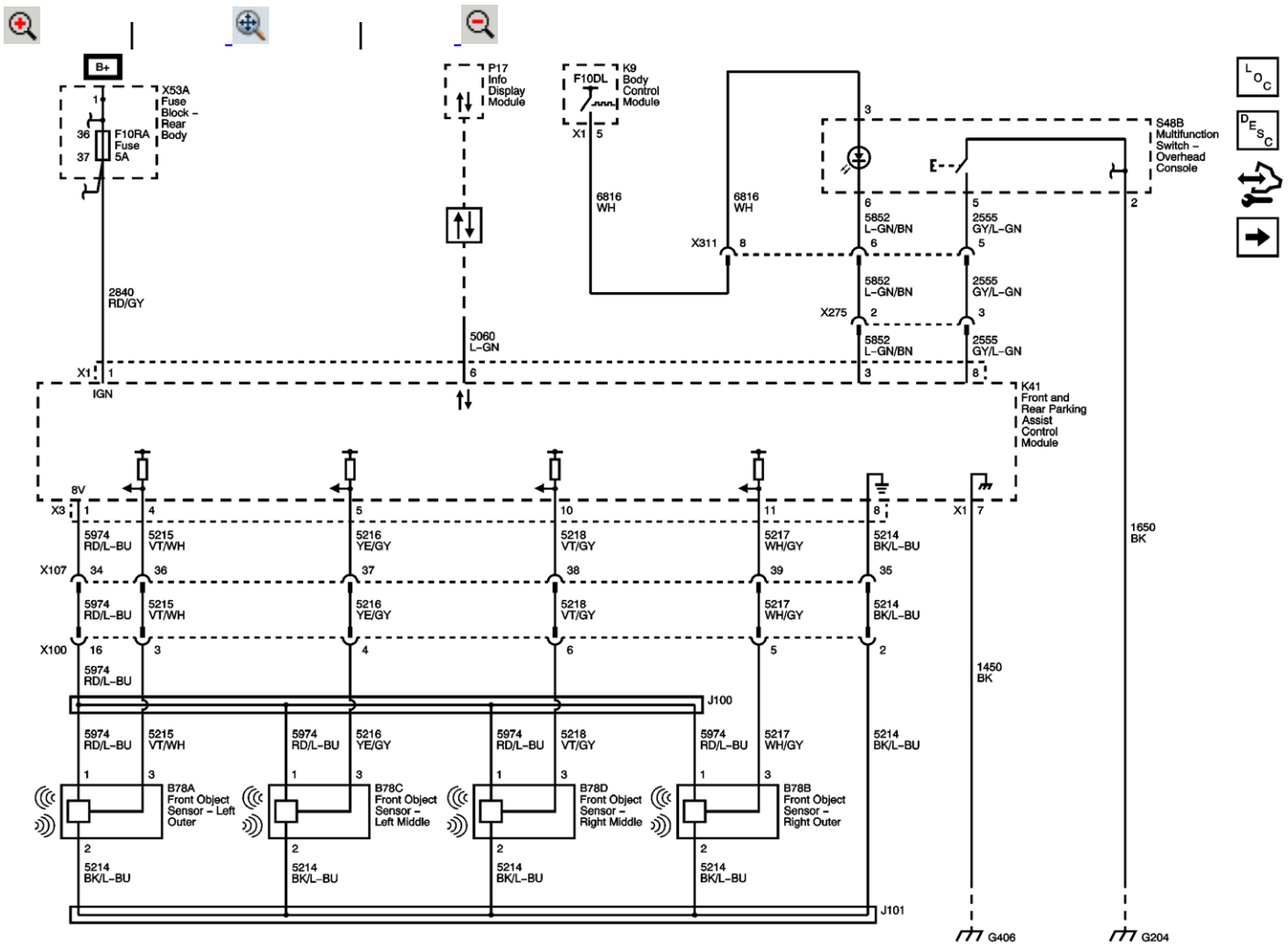

Master Electrical Component List

Rear Park Assist

F2RA, F3RA, F4RA, F5RA, F7RA, F8RA, F10RA, F12RA and F13RA Fuses

Data Communication Schematics

G301 and G406

© Copyright Chevrolet. All rights reserved

Rear Park Assist

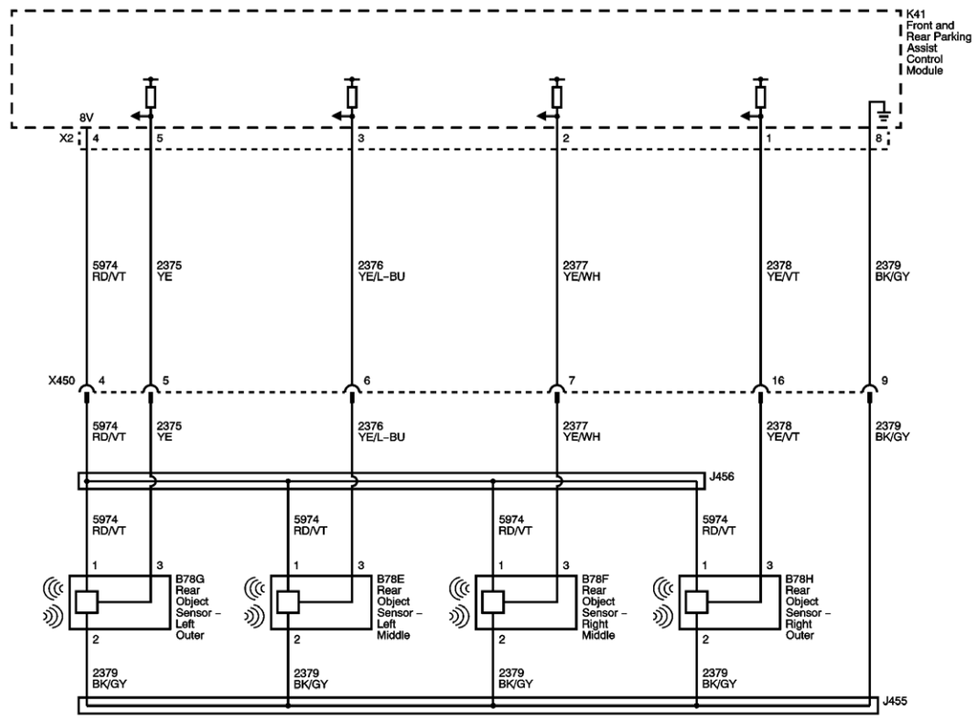

Master Electrical Component List

Rearview Camera

Front Park Assist

© Copyright Chevrolet. All rights reserved

Rearview Camera

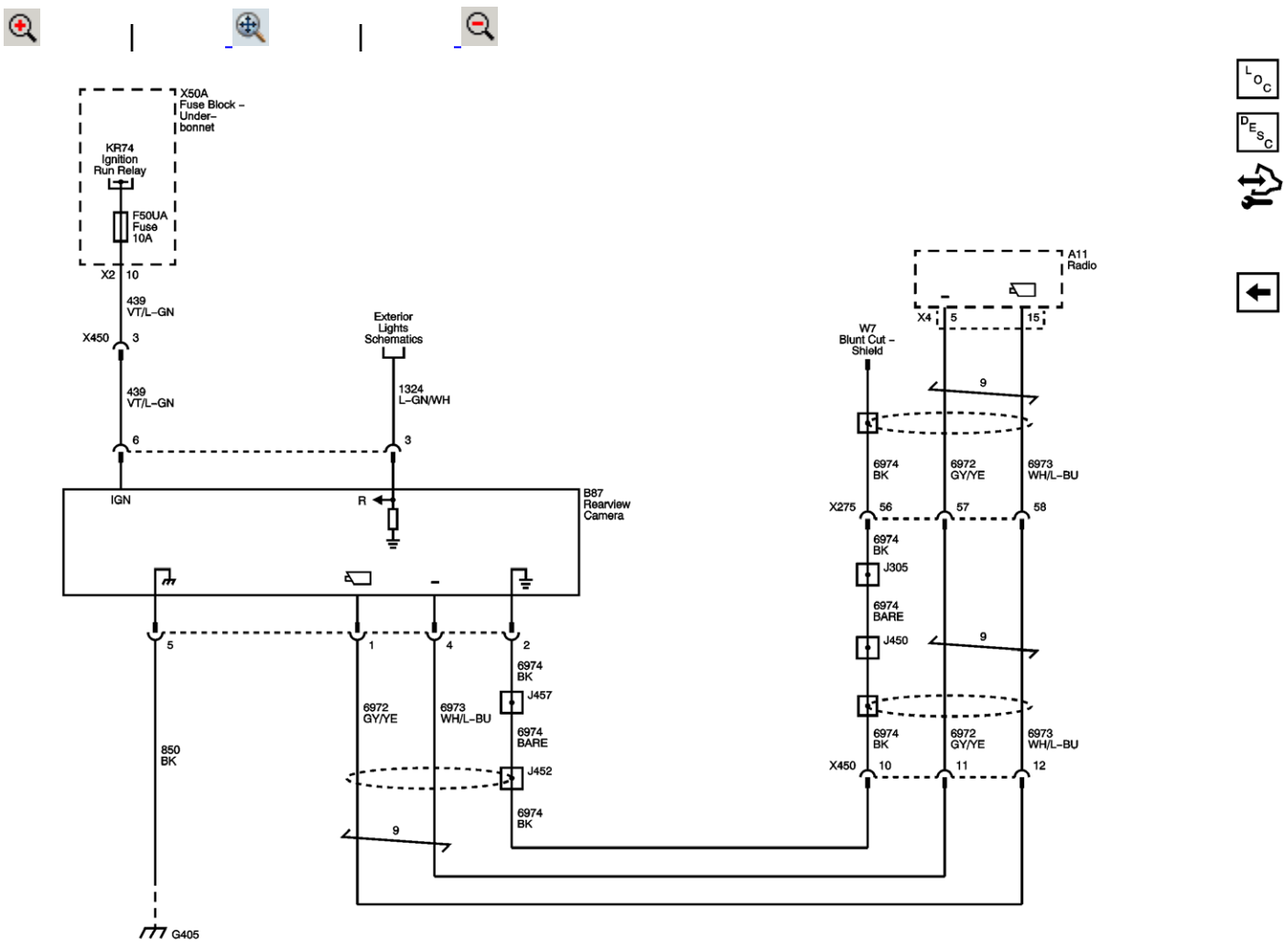

Master Electrical Component List

Rear Park Assist

F32UA, F33UA, F50UA, F51UA, F52UA, F53UA and F54UA Fuses

Master Electrical Schematic Icons

© Copyright Chevrolet. All rights reserved

Keyless Entry

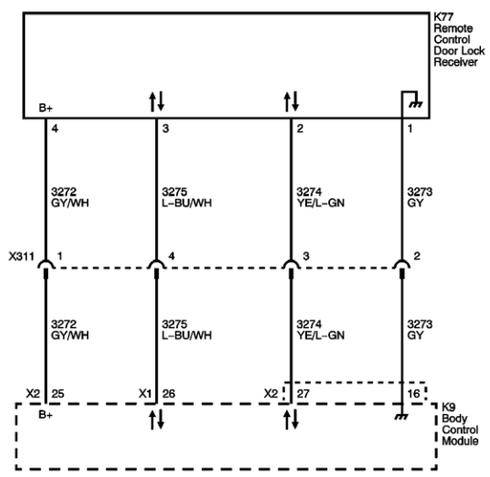

Master Electrical Component List

Keyless Entry System Description and Operation

Passive Start and Passive Entry

© Copyright Chevrolet. All rights reserved

Passive Start

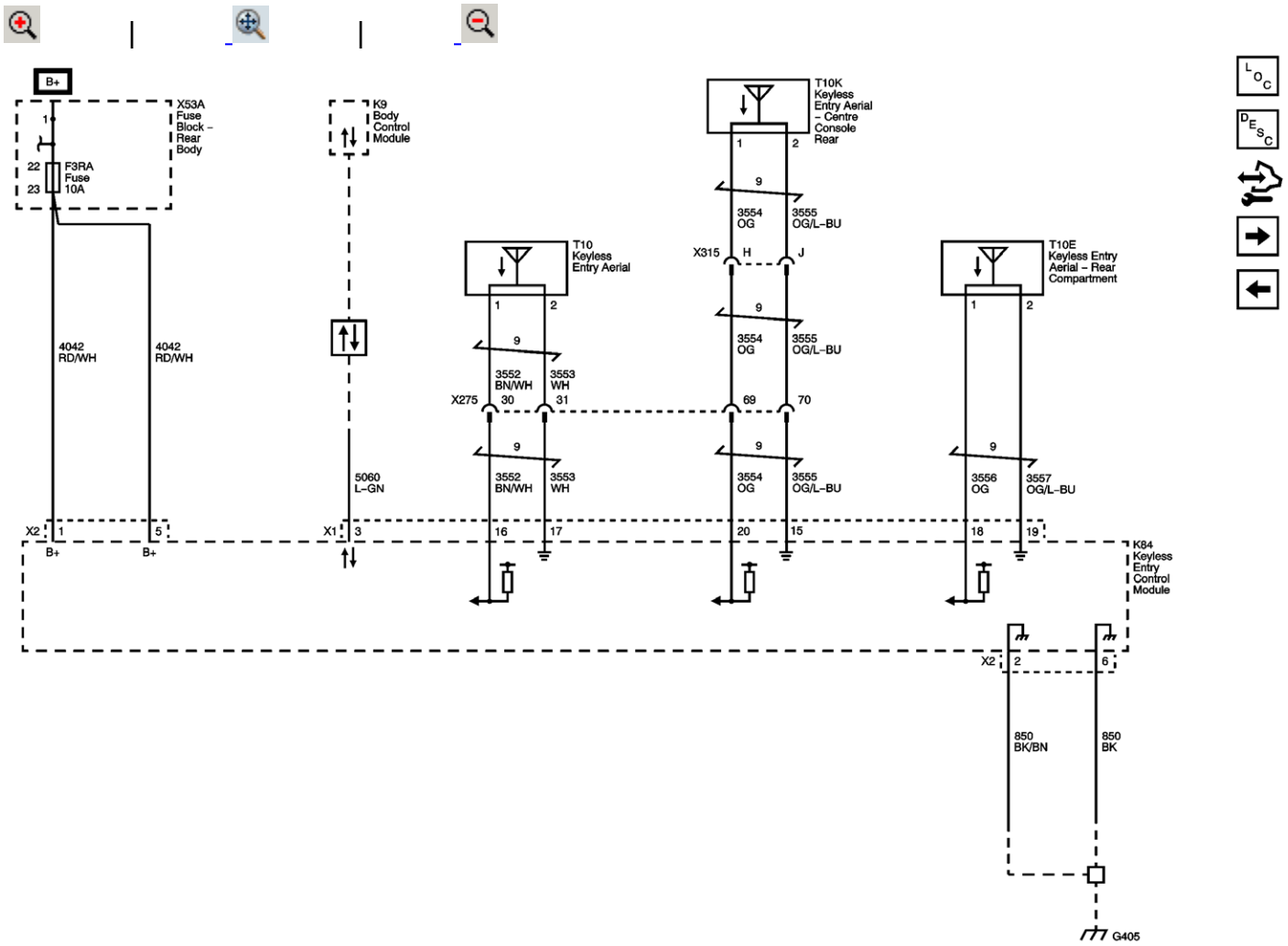

Master Electrical Component List

Keyless Entry System Description and Operation

Garage Door Opener

Keyless Entry

© Copyright Chevrolet. All rights reserved

Garage Door Opener

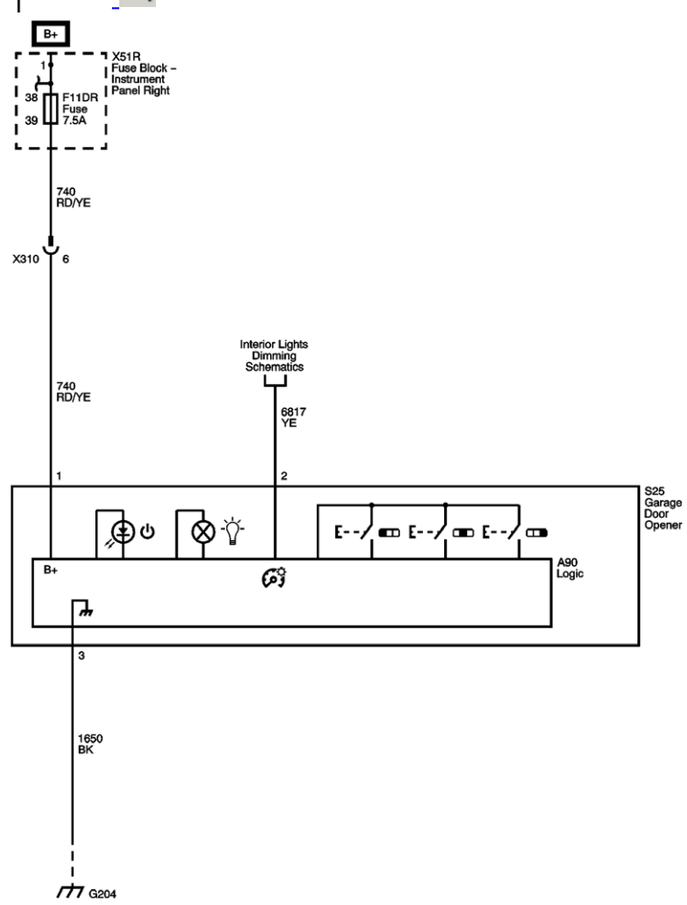

Master Electrical Component List

Keyless Entry System Description and Operation

Passive Start and Passive Entry

© Copyright Chevrolet. All rights reserved

Power, Ground, Serial Data, and Passenger Presence Detection

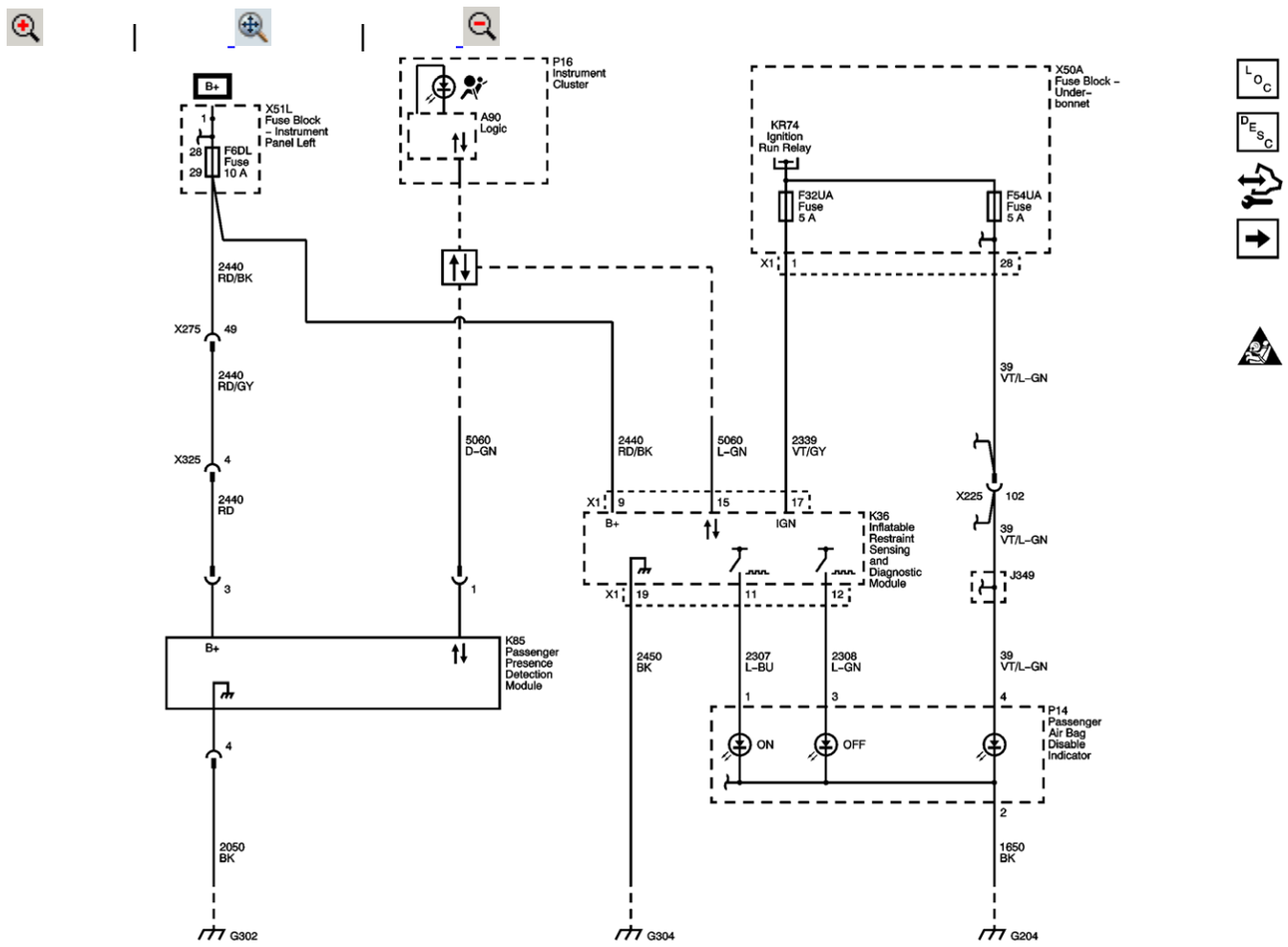

Master Electrical Component List

SIR System Description and Operation

Impact Sensors

F1DL, F2DL, F3DL, F4DL, F5DL, F6DL, F7DL, F10DL, F11DL and F15DL Fuses

F32UA, F33UA, F50UA, F51UA, F52UA, F53UA and F54UA Fuses

Data Communication Schematics

Master Electrical Schematic Icons

F32UA, F33UA, F50UA, F51UA, F52UA, F53UA and F54UA Fuses

G302

G201, G203, G205, G304, G401 and G404

G204

© Copyright Chevrolet. All rights reserved

Impact Sensors

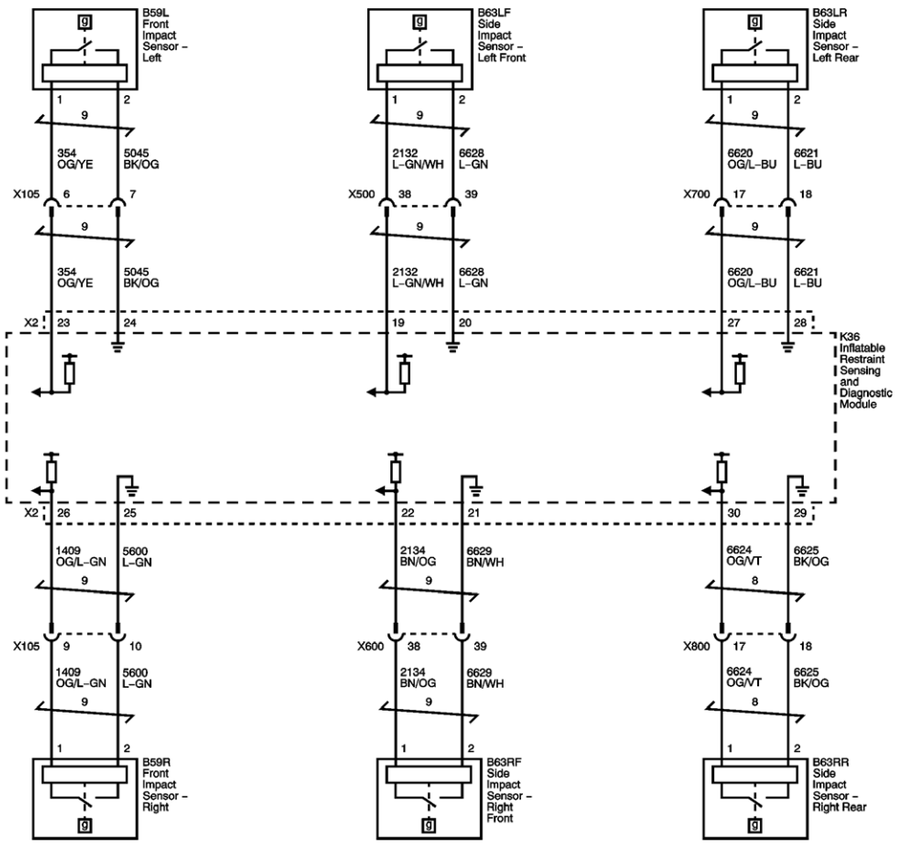

Master Electrical Component List

SIR System Description and Operation

Air Bags

Power, Ground, Data Communication and Passenger Presence Detection

Master Electrical Schematic Icons

© Copyright Chevrolet. All rights reserved

Air Bags

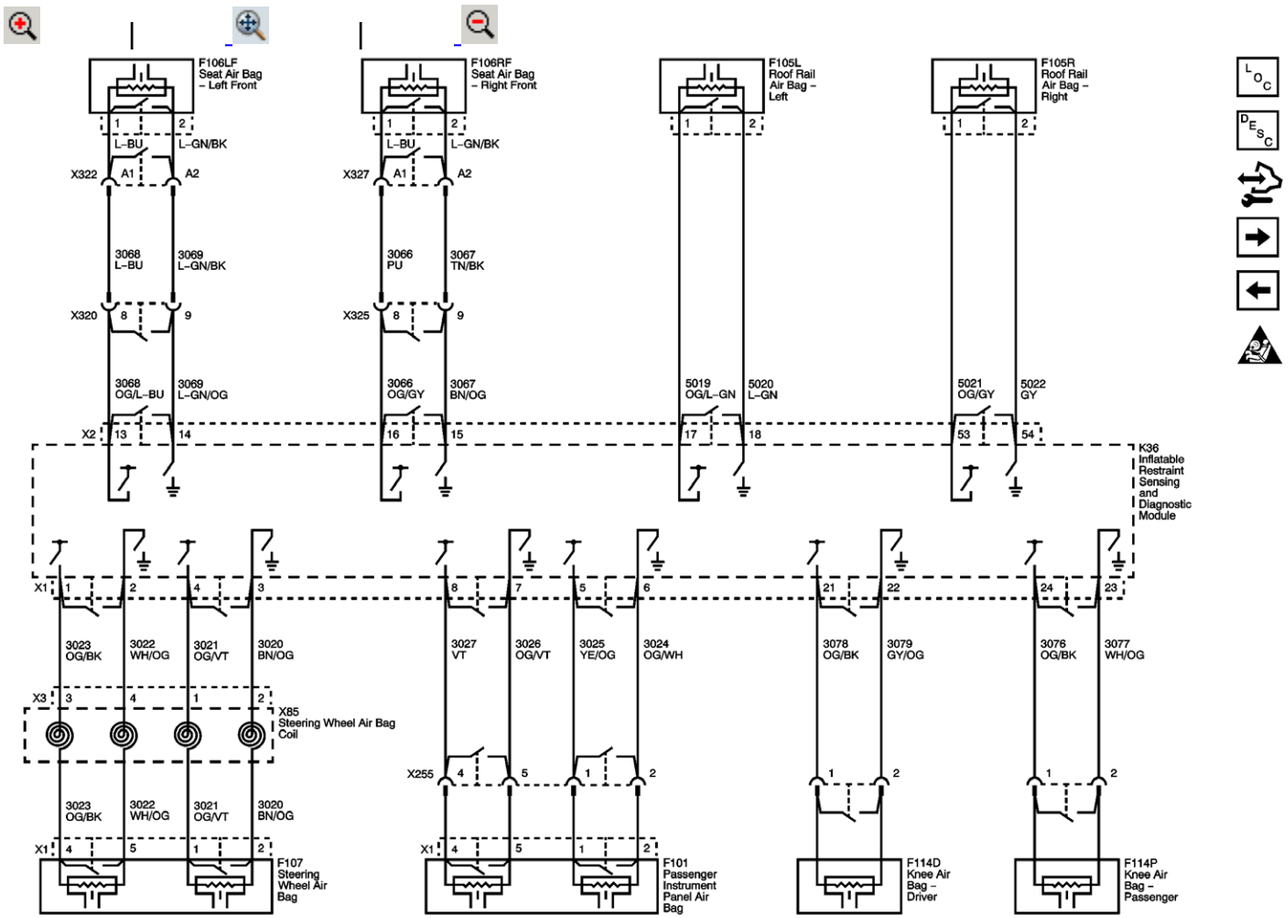
F106LF
Seat Air Bag
– Left Front
F106RF
Seat Air Bag
– Right Front
F105L
Roof Rail
Air Bag –
Left
F105R
Roof Rail
Air Bag –
Right
L–BU
L–GN/BK
X322
X327
A1
A2
3068
L–BU
3069
L–GN/BK
3066
PU
3067
TN/BK
X320
X325
3068
OG/L–BU
3069
L–GN/OG
3066
OG/GY
3067
BN/OG
5019
OG/L–GN
5020
L–GN
5021
OG/GY
5022
GY
X2
K36
Inflatable
Restraint
Sensing
and
Diagnostic
Module
X1
3023
OG/BK
3022
WH/OG
3021
OG/VT
3020
BN/OG
3027
VT
3026
OG/VT
3025
YE/OG
3024
OG/WH
3078
OG/BK
3079
GY/OG
3076
OG/BK
3077
WH/OG
X3
X85
Steering Wheel Air Bag
Coil
X255
F107
Steering
Wheel Air
Bag
F101
Passenger
Instrument
Panel Air
Bag
F114D
Knee Air
Bag –
Driver
F114P
Knee Air
Bag –
Passenger

Master Electrical Component List

SIR System Description and Operation

Pretensioners

Impact Sensors

Master Electrical Schematic Icons

© Copyright Chevrolet. All rights reserved

Pretensioners

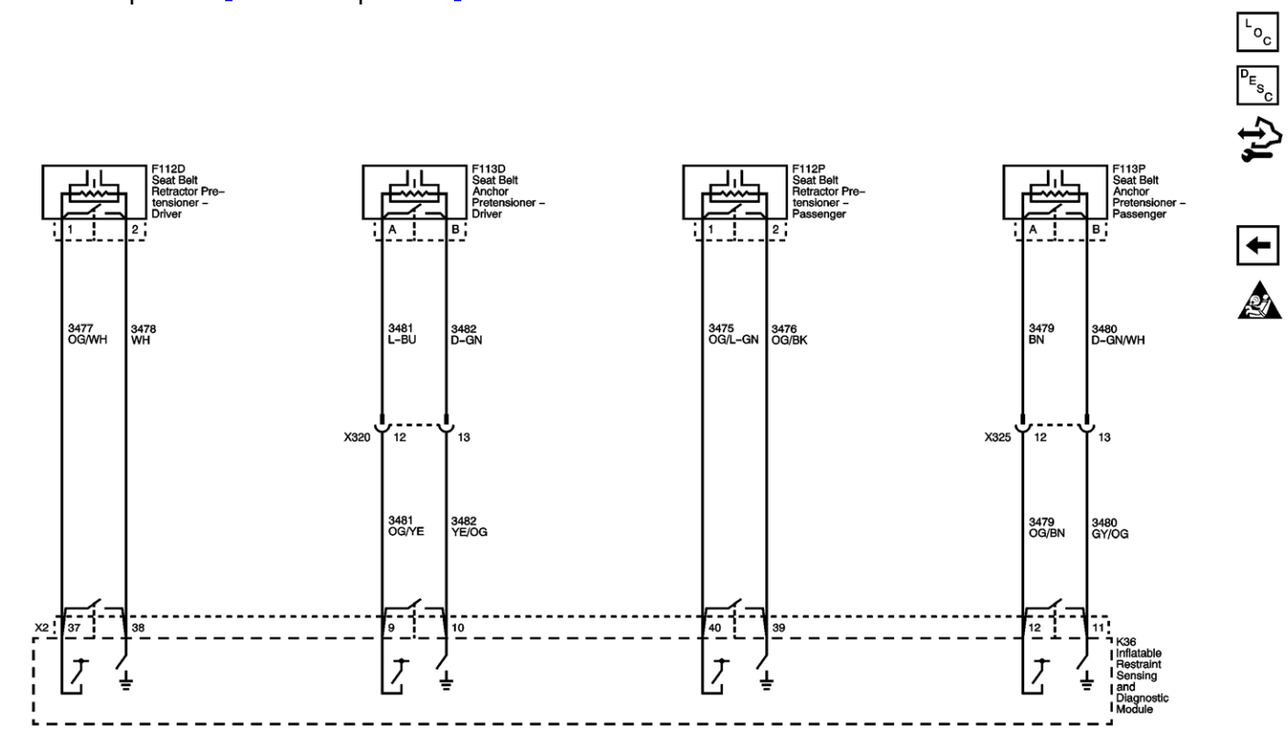

Master Electrical Component List

SIR System Description and Operation

Air Bags

Master Electrical Schematic Icons

© Copyright Chevrolet. All rights reserved

Horns

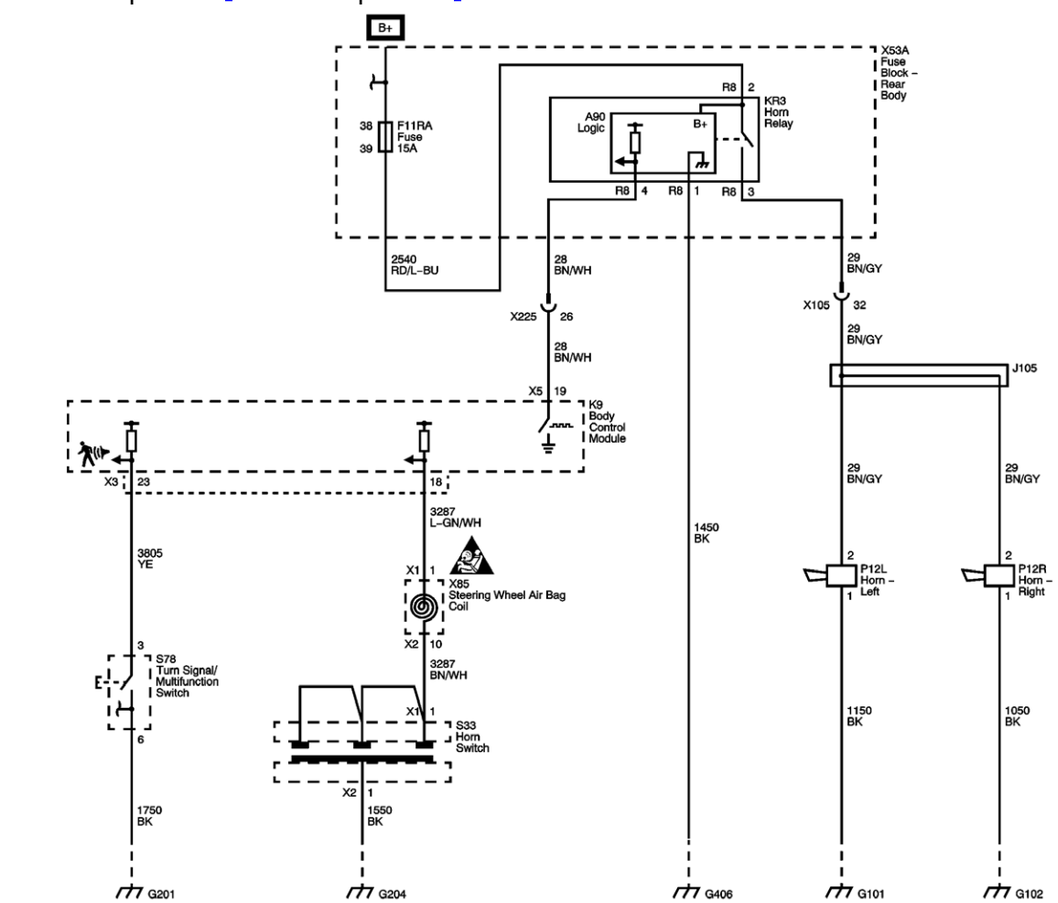
B+
X53A
Fuse
Block –
Rear
Body
R8 2
KR3
Horn
Relay
A90
Logic
B+
38
39
F11RA
Fuse
15A
R8 4
R8 1
R8 3
2540
RD/L-BU
28
BN/WH
X225 26
28
BN/WH
X5 19
K9
Body
Control
Module
X3 23
18
3287
L-GN/WH
3805
YE
X1 1
X85
Steering Wheel Air Bag
Coil
X2 10
3
S78
Turn Signal/
Multifunction
Switch
6
1750
BK
3287
BN/WH
X1 1
S33
Horn
Switch
X2 1
1550
BK
1450
BK
29
BN/GY
X105 32
29
BN/GY
J105
29
BN/GY
29
BN/GY
2
P12L
Horn –
Left
1
2
P12R
Horn –
Right
1
1150
BK
1050
BK
G201
G204
G406
G101
G102

Master Electrical Component List

Horns System Description and Operation

F6RA, F11RA, F14RA and F16RA Fuses

Master Electrical Schematic Icons

G204

G301 and G406

G101 and G102

G204

© Copyright Chevrolet. All rights reserved

Immobiliser

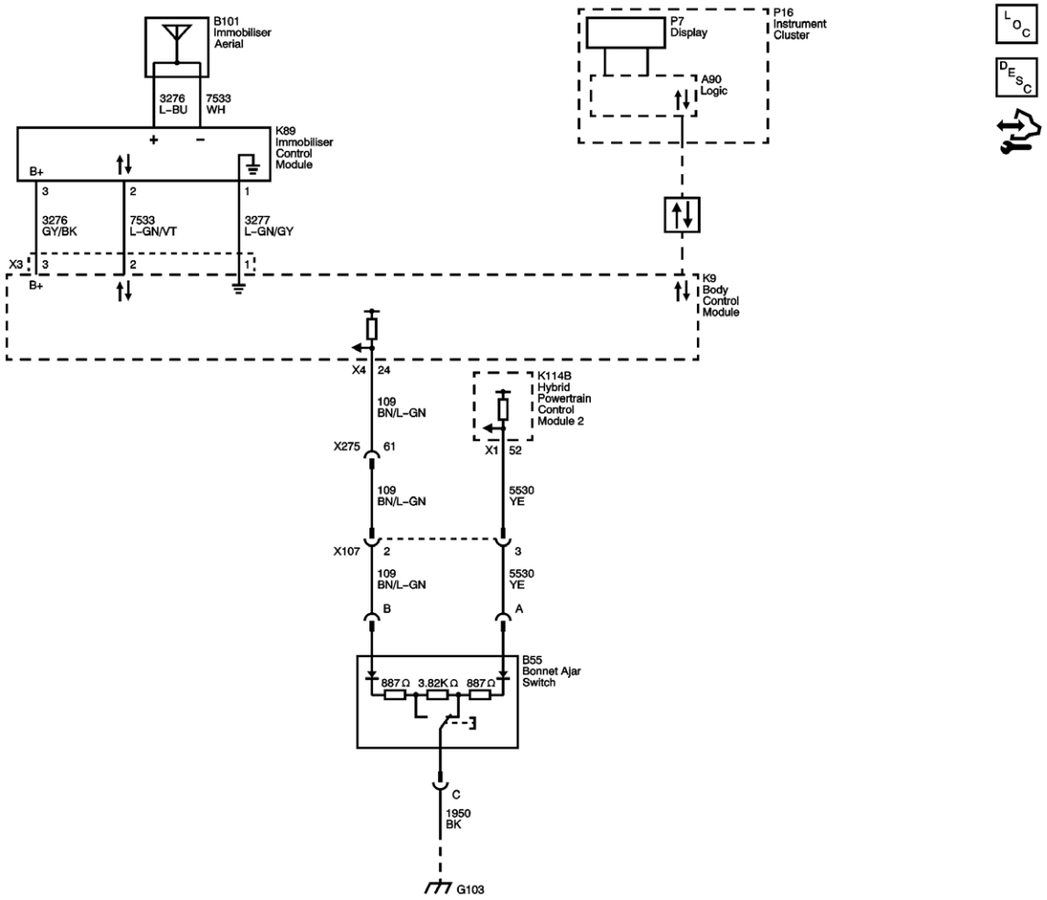

Master Electrical Component List

Immobiliser Description and Operation

Data Communication Schematics

G103, G104 and G105

© Copyright Chevrolet. All rights reserved

Tailgate Release

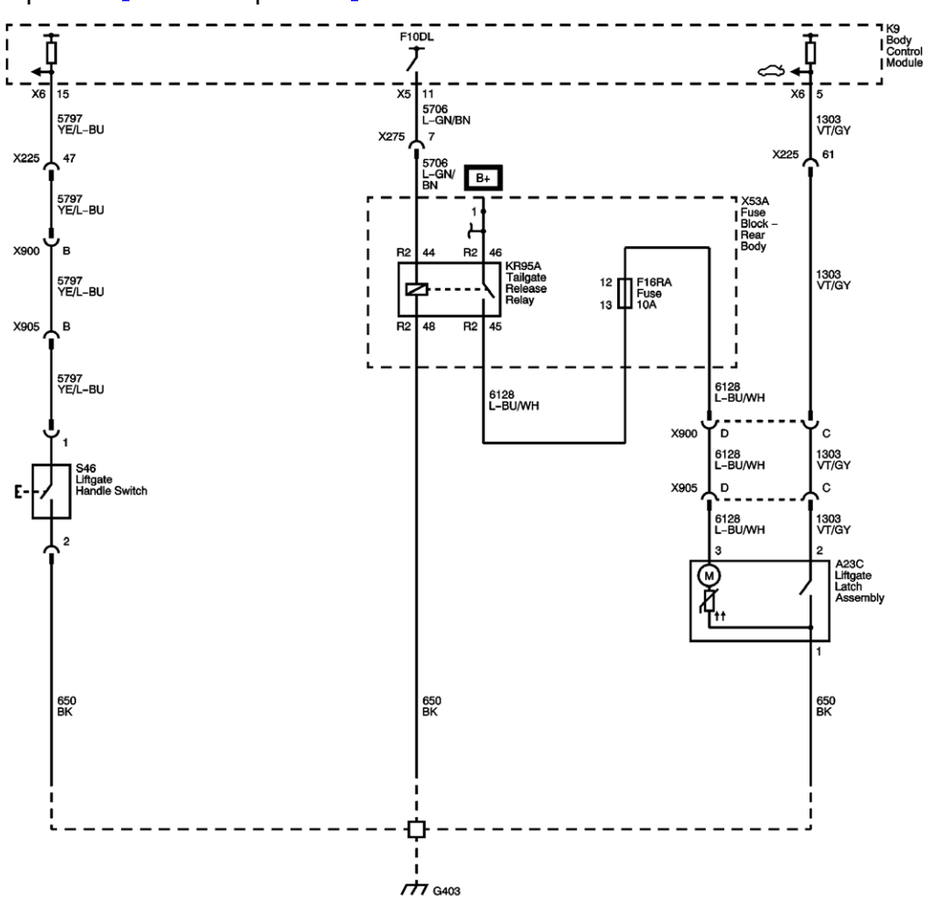

Master Electrical Component List

Rear Hatch/Gate Description and Operation

F1DL, F2DL, F3DL, F4DL, F5DL, F6DL, F7DL, F10DL, F11DL and F15DL Fuses

F6RA, F11RA, F14RA and F16RA Fuses

G403

© Copyright Chevrolet. All rights reserved

Internal Mode Switch

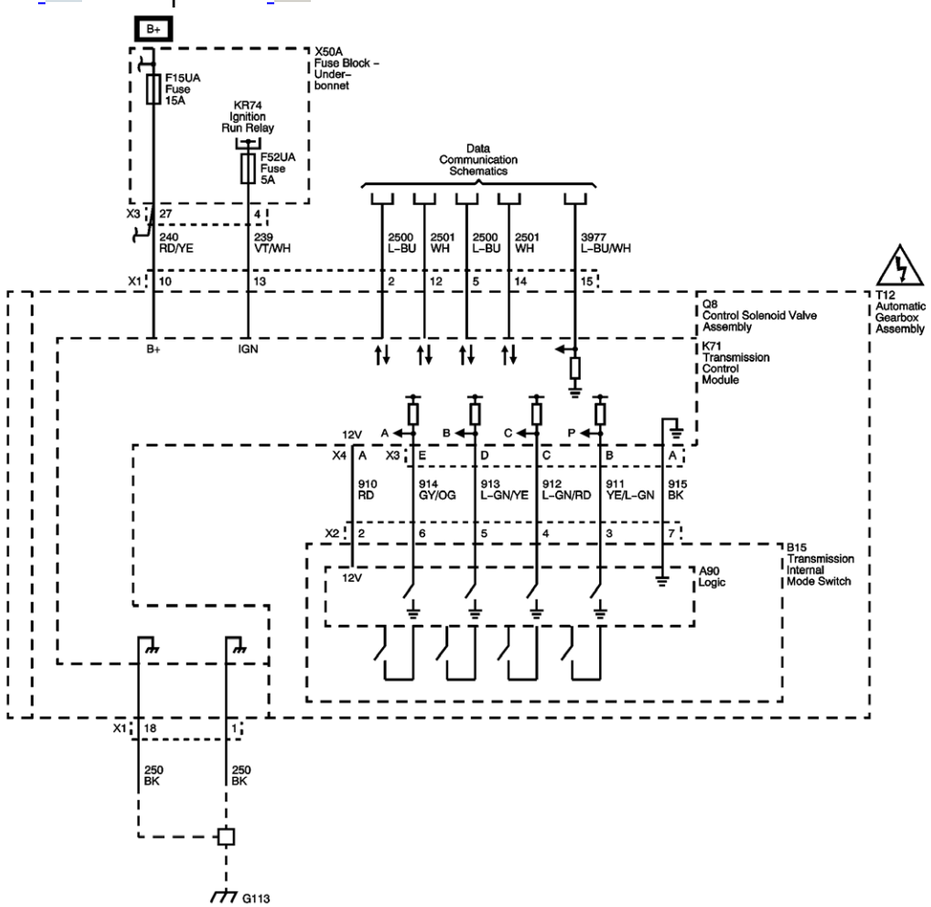

Master Electrical Component List

Electronic Component Description

Pressure Controls, Shift Controls and Speed Sensor

F10UA, F11UA, F12UA, F15UA, F17UA, F19UA and F39UA Fuses

F32UA, F33UA, F50UA, F51UA, F52UA, F53UA and F54UA Fuses

Data Communication Schematics

G106, G109, G110, G112, G113 and G117

© Copyright Chevrolet. All rights reserved

S109 Sport Mode Switch

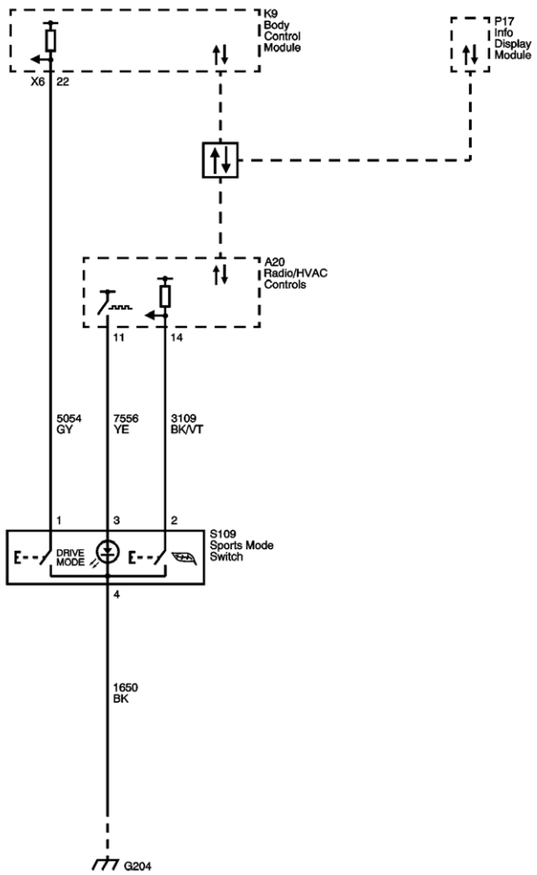

© Copyright Chevrolet. All rights reserved

Pressure Controls, Shift Controls and Speed Sensor

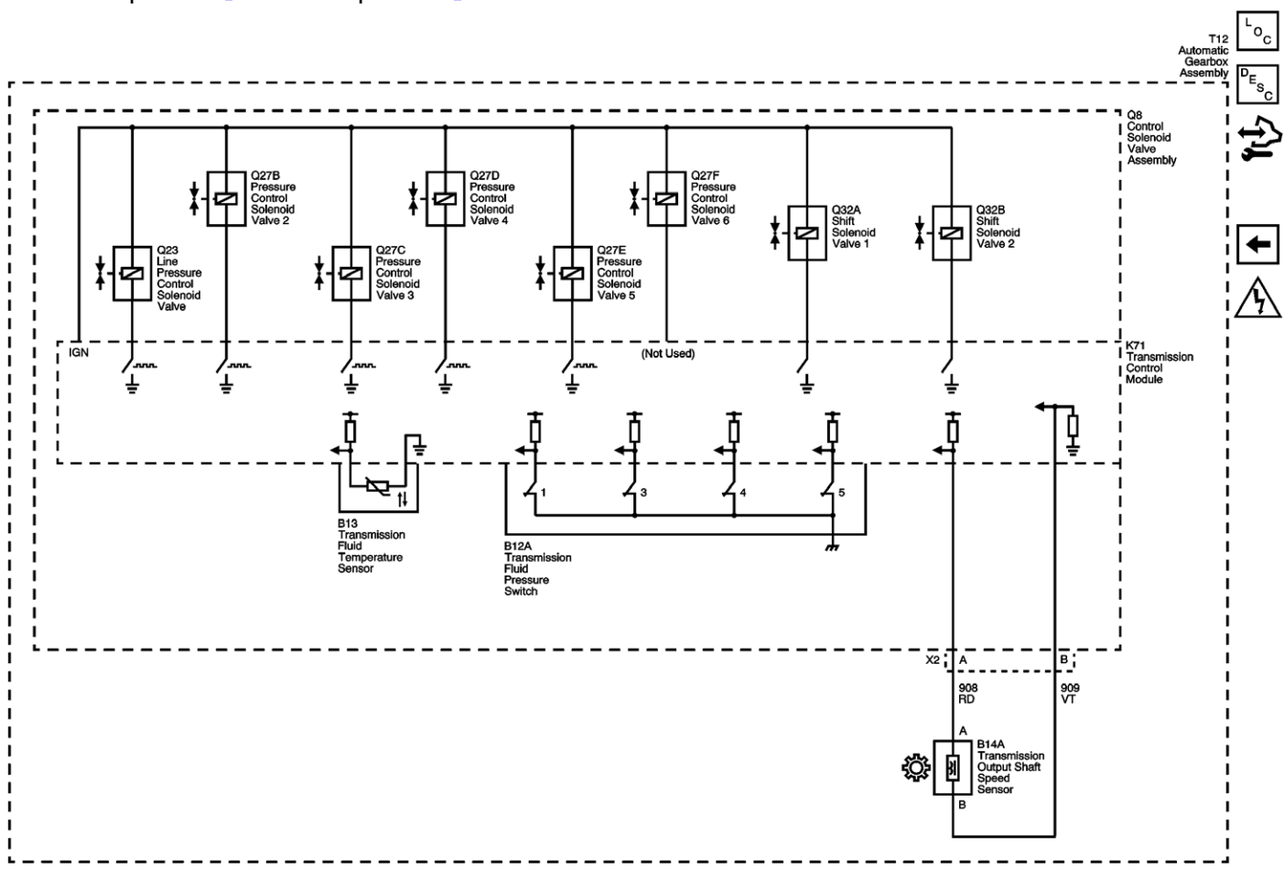

Master Electrical Component List

Electronic Component Description

Internal Mode Switch

© Copyright Chevrolet. All rights reserved

Case and Associated Parts

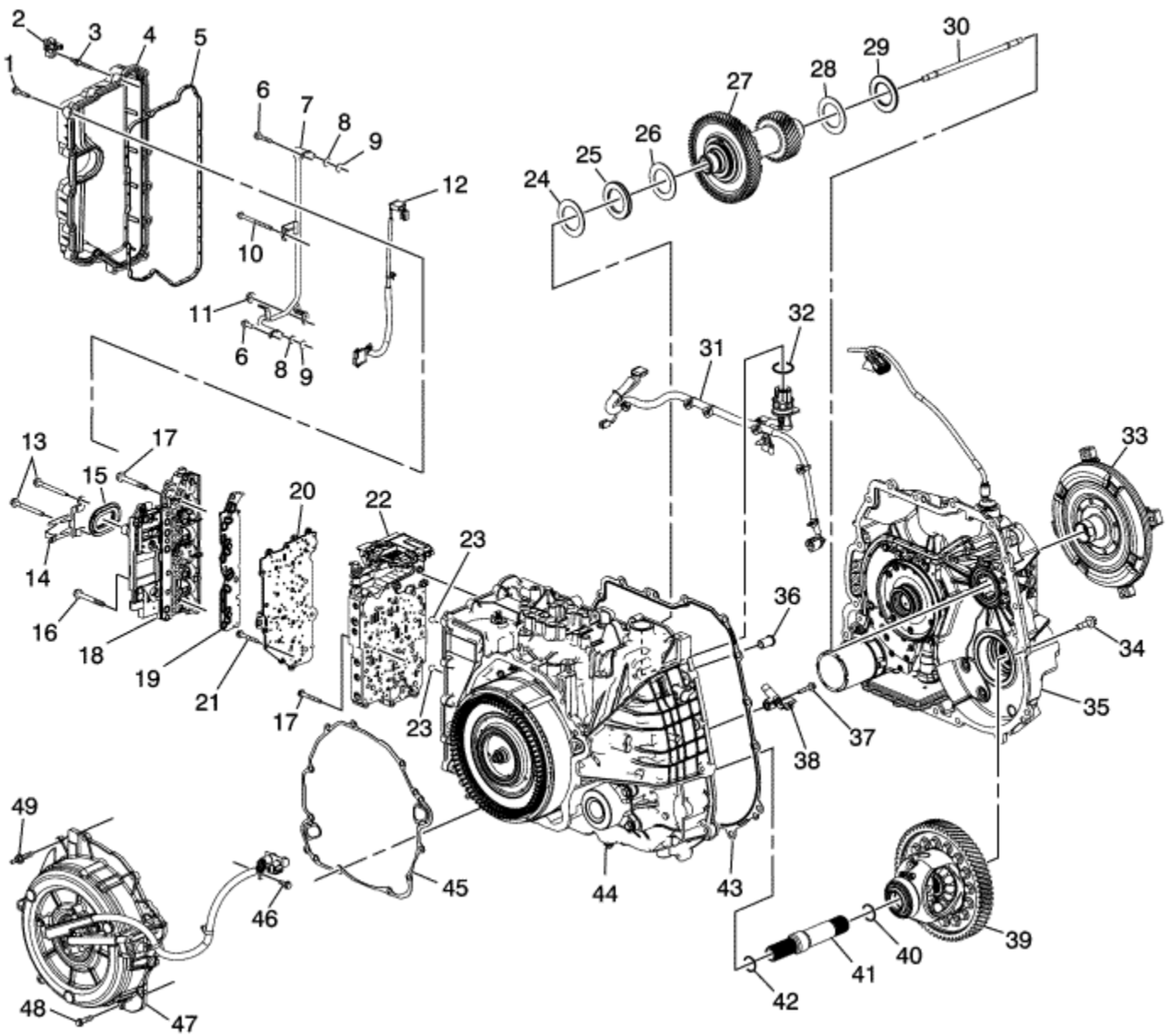

(1) Control Valve Body Cover Bolt M6 x 35 mm Qty: 10
(2) Auxiliary Pump Motor Cable Retainer
(3) Fluid Level Control Valve Stud M6 x 40 mm Qty: 5
(4) Control Valve Body Cover Assembly
(5) Control Valve Body Cover Gasket
(6) Fluid Cooler Outlet Pipe Assembly Bolt M5 x 16 mm Qty: 2
(7) Transmission Fluid Cooler Outlet Pipe Assembly
(8) Transmission Fluid Cooler Outlet Washer
(9) Transmission Fluid Cooler Outlet Seal
(10) Control Valve Body Bolt M6 x 80 mm Qty: 1
(11) Variable Drive Pulley Retaining Nut
(12) A/Trans Wiring Extension Harness Assembly
(13) Control Valve Body Bolt M6 x 65 mm Qty: 5
(14) Control Solenoid Valve Spring
(15) Control Valve Body Cover Wiring Connector Hole Seal
(16) Control Valve Body Bolt M6 x 75 mm Qty: 4
(17) Control Valve Body Bolt M6 x 42 mm Qty: 5
(18) Control Solenoid (w/Body and TCM) TEHCM Valve Assembly
(19) Control Solenoid Valve Filter Plate
(20) Control Valve Channel Plate Assembly
(21) Control Valve Body Bolt M6 x 48 mm Qty: 12
(22) Control Valve Body
(23) Control Valve Body Ball Check Valve Qty: 2
(24) Front Differential Bearing Spacer
(25) Front Drive Pinion Gear Shaft Thrust Bearing Assembly (LHS)
(26) Front Differential Drive Pinion Gear Bearing Thrust Washer - Selective (LHS)
(27) Front Differential Drive Pinion (w/Transfer Gear) Gear Assembly
(28) Front Differential Drive Pinion Gear Bearing Thrust Washer - Selective (RHS)
(29) Front Drive Pinion Gear Shaft Thrust Bearing Assembly Selective (RHS)
(30) Front Differential Transfer Drive Gear Fluid Passage Tube Assembly
(31) A/Trans Wiring Harness Assembly
(32) Wiring Connector Seal
(33) A/Trans Torque Damper Assembly
(34) Torque Damper and Differential Housing Bolt M10 x 35 mm Qty: 17
(35) Torque Damper and Differential (w/Fluid Pump) Housing Assembly
(36) A/Trans Pump Fluid Outlet Seal Assembly

(37) A/Trans Output Speed Sensor Bolt M6 x 30 mm Qty: 1
(38) A/Trans Output Speed Sensor Assembly
(39) Front Differential Carrier Assembly (FWD)
(40) Front Wheel Drive Shaft Retaining Ring
(41) Output Shaft Assembly
(42) Front Wheel Drive Shaft Retaining Ring
(43) Torque Damper Housing Outer Seal
(44) A/Trans Case Assembly
(45) A/Trans Case Cover Gasket
(46) A/Trans Wiring Harness Shield Bolt M6 x 20 mm Qty: 1 External
(47) A/Trans Case Cover Assembly
(48) A/Trans Case Cover Bolt M8 x 30 mm Qty: 9
(49) Case Cover Stud M8 x 30 mm Qty: 2

© Copyright Chevrolet. All rights reserved

Transmission Case Assembly (1 of 2)

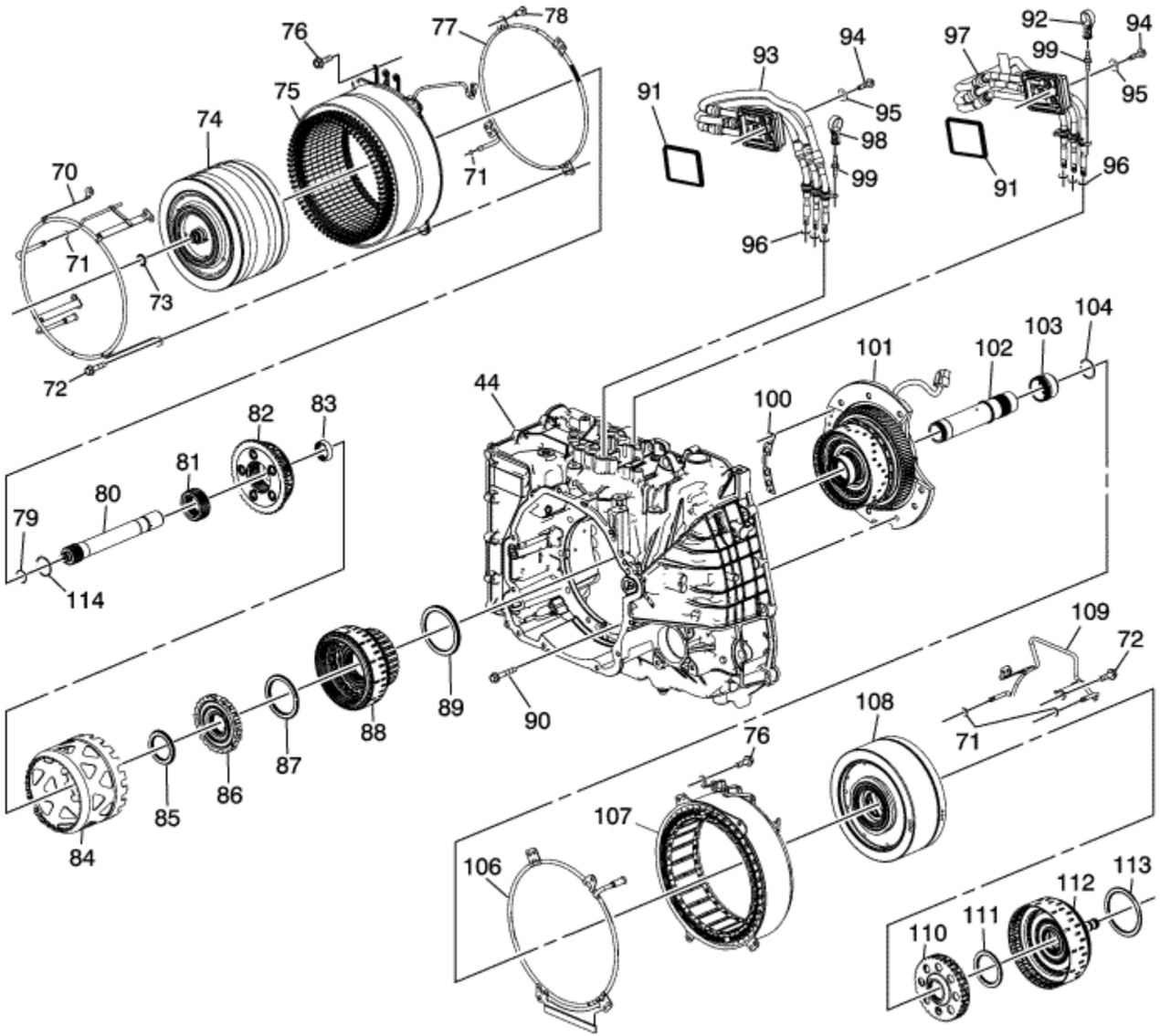

(44) A/Trans Case Assembly
(70) Drive Motor/Generator Stator Cooling Tube Assembly (LHS Unit B)
(71) Drive Motor/Generator Stator Cooling Tube Seal Qty: 4
(72) Drive Motor/Generator Stator Bolt M6 x 20 mm Qty: 8
(73) Drive Motor/Generator Rotor Lubricant Seal
(74) Drive Motor/Generator Rotor Assembly - Unit B
(75) Drive Motor/Generator Stator Assembly - Unit B
(76) Drive Motor/Generator Power Inverter Module Cable Connector Bolt M6 x 20 mm Qty: 6 Internal
(77) Drive Motor/Generator Stator Cooling Tube Assembly (RHS Unit B)
(78) Drive Motor/Generator Stator Cooling Tube Retainer
(79) Output Sun Gear Shaft Lubricant O-Ring Seal
(80) Output Sun Gear Shaft
(81) Output Sun Gear
(82) Output Carrier Assembly - C2
(83) Output Carrier Roller Bearing Assembly
(84) Output Carrier Shell
(85) Output Carrier Thrust Bearing Assembly
(86) Variable Hi and 2-3-4 Clutch Hub
(87) Variable Hi and 2-3-4 Clutch Hub Thrust Bearing Assembly
(88) Variable Hi and 2-3-4 Clutch Assembly
(89) Variable Hi and 2-3-4 Clutch Housing Thrust Bearing Assembly
(90) Centre Support Bolt M10 x 25 mm Qty: 9
(91) Drive Motor/Generator Power Inverter Module Cable Housing Cover Seal
(92) Auxiliary Pump Motor Cable Retainer - 3 Phase - Cable A/3-PH Motor
(93) Drive Motor/Generator Power Inverter Module Cable Assembly - 3 Phase - B
(94) High Voltage Cover to Controller Retaining Bolt Qty: 2
(95) Drive Motor Power Inverter Module Cable Connector Bolt Seal Qty: 2
(96) Drive Motor/Generator Power Inverter Module Cable Assembly Seal - 3 Phase
(97) Drive Motor/Generator Power Inverter Module Cable Assembly - 3 Phase - A
(98) Auxiliary Pump Motor Cable Retainer - 3 Phase - Cable B/Resolver
(99) Drive Motor/Generator Power Inverter Module Cable Stud M6 x 20 Qty: 1
(100) Centre Support Oil Passage Seal
(101) Centre (w/Variable Low and 1-2 Reverse Clutch) Support Assembly
(102) Input Clutch Hub Shaft
(103) Generator/Drive Motor Rotor Hub Shaft
(104) Input Shaft Retainer

(106) Generator/Drive Motor Stator Cooling Tube Assembly (LHS Unit A)
(107) Generator/Drive Motor Stator Assembly - Unit A
(108) Generator/Drive Motor Rotor Assembly - Unit A
(109) Generator/Drive Motor Stator Cooling Tube Assembly (RHS Unit A)
(110) Input Clutch Hub
(111) Input Carrier Thrust Bearing Assembly
(112) 1-3 Reverse Clutch Assembly
(113) 1-3 Reverse Clutch Thrust Bearing Assembly
(114) Output Sun Gear Retaining Ring

© Copyright Chevrolet. All rights reserved

Transmission Case Assembly (2 of 2)

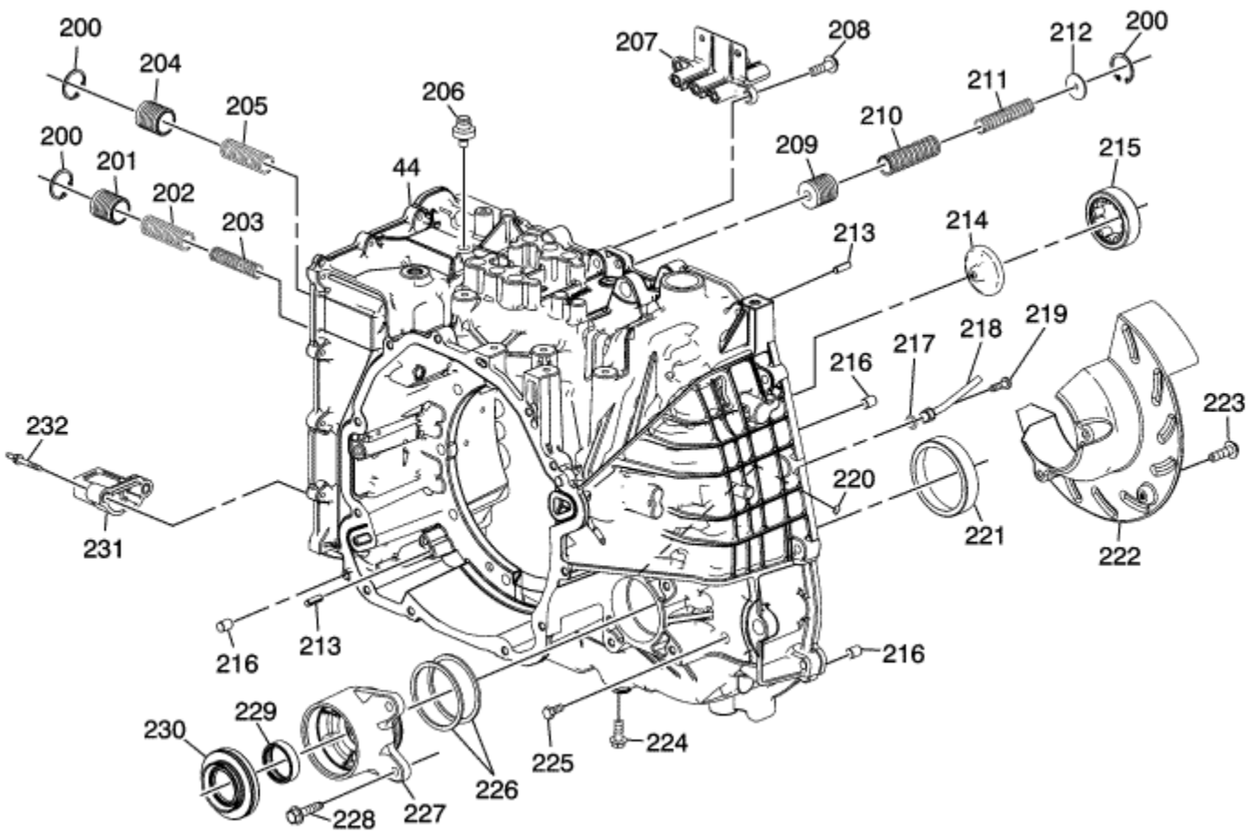

(44) A/Trans Case Assembly
(200) Accumulator Piston Retaining Ring
(201) Variable Hi and 2-3-4 Clutch Accumulator Piston
(202) Variable Hi and 2-3-4 Clutch Accumulator Piston Spring
(203) Variable Hi and 2-3-4 Clutch Accumulator Piston Spring - Inner
(204) Variable Low and 1-2 Reverse Clutch Accumulator Piston
(205) Variable Low and 1-2 Reverse Clutch Accumulator Piston Spring

(206) A/Trans Vent Assembly
(207) Drive Motor Generator Power Inverter Module Cable Terminal Insulator Block Assembly
(208) Drive Motor Generator Power Inverter Module Cable Terminal Insulator Block Bolt M6 x 20 mm Qty: 2
(209) 1-3 Reverse Clutch Accumulator Piston
(210) 1-3 Reverse Clutch Accumulator Piston Spring - Outer
(211) 1-3 Reverse Clutch Accumulator Piston Spring - Internal
(212) 1-3 Reverse Clutch Accumulator Piston Spring Washer
(213) Generator/Drive Motor Stator Locator Pin
(214) Front Differential Drive Pinion Gear Lubricant Dam
(215) Front Differential Drive Pinion Gear Roller Bearing Assembly (Case Housing)
(216) Transmission Case Locator Pin
(217) Front Differential Carrier Lubricant Pipe Seal
(218) Front Differential Carrier Lubricant Pipe
(219) Front Differential Carrier Lubricant Pipe Bolt M5 x 16 mm Qty: 1
(220) Front Differential Carrier Lubricant Cup
(221) Front Differential Drive Pinion Gear Bearing Cup
(222) Front Differential Carrier Baffle (Case)
(223) Front Differential Carrier Baffle Bolt M6 x 20 mm Qty: 3
(224) Transmission Fluid Drain Plug Qty: 1
(225) A/Trans Fluid Level Hole Plug Qty: 1
(226) A/Trans Case Extension Seal Qty: 2
(227) Case Extension Assembly
(228) Case Extension Bolt M10 x 25 mm Qty: 3
(229) Front Wheel Drive Shaft Bearing Assembly
(230) Front Wheel Drive Shaft Oil Seal Assembly (LHS)
(231) A/Trans Fluid Level Control Valve
(232) A/Trans Fluid Level Control Valve Stud M6 x 40 mm Qty: 2

© Copyright Chevrolet. All rights reserved

Torque/Damper and Differential (w/Fluid Pump) Housing Assembly

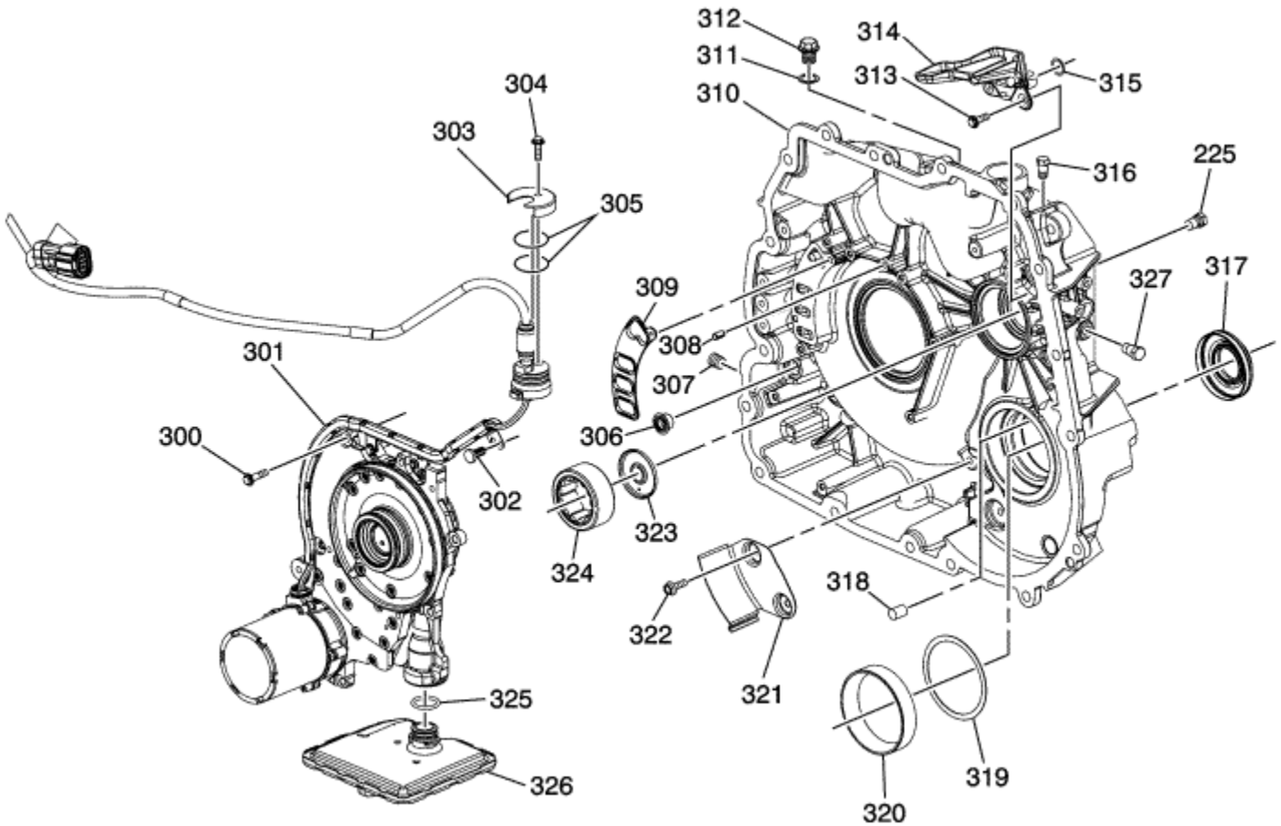

(225) A/Trans Fluid Level Hole Plug Qty: 1
(300) A/Trans Fluid Pump Bolt M6 x 25 mm Qty: 8
(301) A/Trans Fluid Pump Assembly
(302) A/Trans Auxiliary Fluid Pump Motor (3 Phase) Cable Retainer Bolt M6 x 20 mm Qty: 1
(303) Auxiliary Fluid Motor Retainer
(304) A/Trans Auxiliary Fluid Pump Motor (3 Phase) Cable Bolt M6 x 20 mm Qty: 1
(305) O-Ring Seal

(306) A/Trans Pump Fluid Outlet Seal Assembly
(307) Auxiliary Pump Press Plug
(308) A/Trans Fluid Pump Locator Pin
(309) A/Trans Fluid Pump Seal Assembly
(310) Torque/Damper and Differential Housing Assembly
(311) Filler Hole Plug Seal
(312) Filler Hole Plug M20 x 20 mm Qty: 1
(313) A/Trans Fluid Trough Bolt M6 x 20 mm Qty: 2
(314) A/Trans Fluid Trough Assembly
(315) A/Trans Fluid Trough Seal
(316) A/Trans Fluid Passage Plug Qty: 1
(317) Front Wheel Drive Shaft Oil Seal Assembly (RHS)
(318) Front Differential Carrier Cup Plug
(319) Front Differential Bearing Washer - Selective
(320) Front Differential Drive Pinion Gear Bearing Cup
(321) Front Differential Carrier Baffle (Housing)
(322) Front Differential Carrier Baffle Bolt M6 x 20 mm Qty: 2
(323) Front Differential Drive Pinion Gear Lubricant Dam
(324) Front Differential Drive Pinion Gear Roller Bearing Assembly (Differential Housing)
(325) A/Trans Fluid Filter Seal
(326) A/Trans Fluid Filter
(327) A/Trans Fluid Passage Plug Qty: 1

© Copyright Chevrolet. All rights reserved

Fluid Pump Assembly

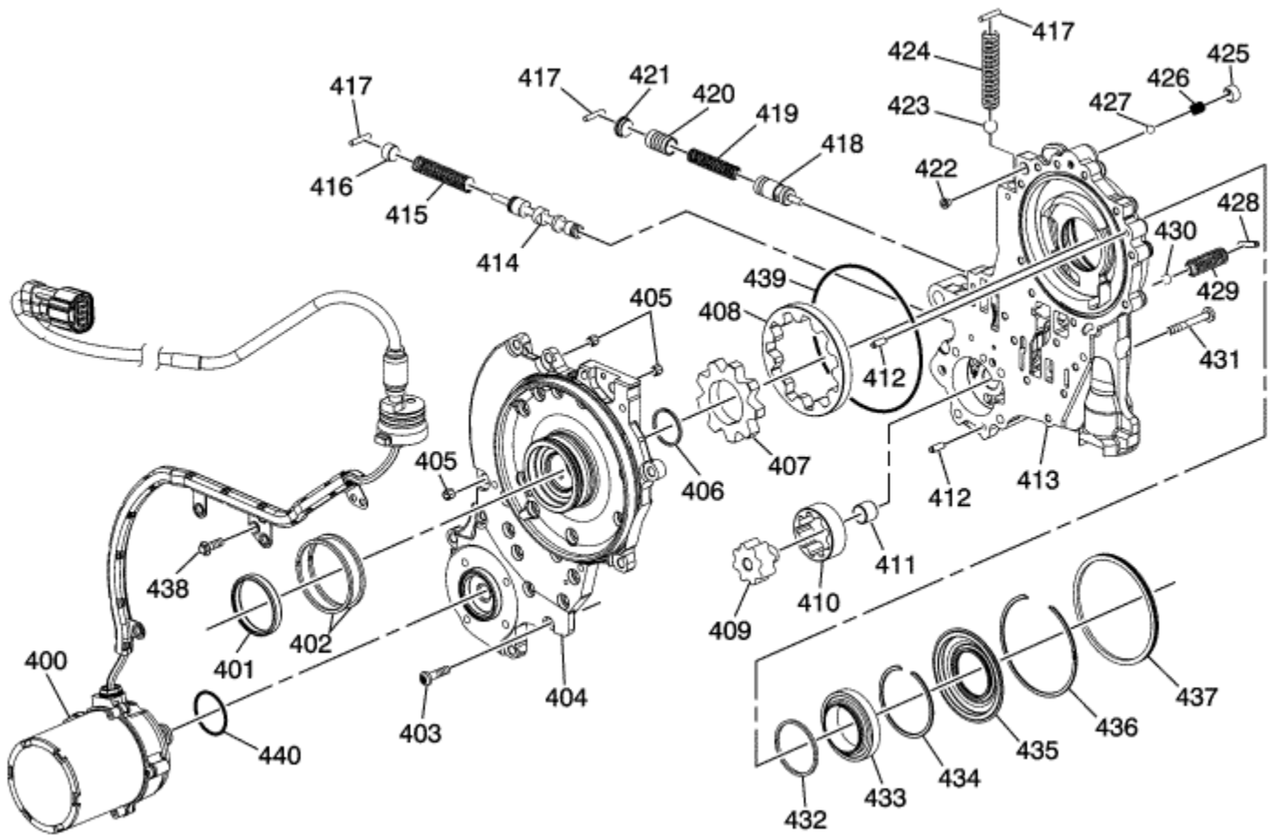

(400) Electric Auxiliary Pump Drive Motor Assembly
(401) Input Shaft Bearing Assembly
(402) 1-3 Reverse Clutch Housing Seal
(403) A/Trans Fluid Pump Cover Bolt M6 x 25 mm Qty: 19
(404) A/Trans Fluid Pump Cover
(405) Harness Bolt Retainers Qty: 3
(406) A/Trans Fluid Pump Seal

(407) A/Trans Fluid Pump Drive Gear - Selective
(408) A/Trans Fluid Pump Driven Gear - Selective
(409) A/Trans Auxiliary Fluid Pump Drive Gear
(410) A/Trans Auxiliary Fluid Pump Driven Gear
(411) A/Trans Fluid Pump Drive Shaft Bushing
(412) A/Trans Fluid Pump Locator Pin
(413) A/Trans Fluid Pump Body Assembly
(414) Pressure Regulator Valve
(415) Pressure Regulator Valve Spring
(416) Pressure Regulator Valve Bore Plug
(417) Pressure Regulator Valve Bore Plug Retainer
(418) A/Trans Fluid Pump Cut-off Valve
(419) A/Trans Fluid Pump Cut-off Valve Spring
(420) A/Trans Fluid Auxiliary Pump Cut-off Valve
(421) A/Trans Fluid Pump Cut-off Valve Bore Plug
(422) 1-3 Reverse Clutch Housing Air Bleed Valve
(423) Pressure Relief Ball Valve - Main Pump
(424) Pressure Relief Ball Valve Spring
(425) A/Trans Torque Damper Pressure Regulator Valve Bore Plug
(426) Control Valve Body Ball Check Valve Spring
(427) Control Valve Body Ball Check Valve
(428) Pressure Regulator Valve Bore Plug Retainer
(429) Pressure Relief Ball Valve Spring
(430) Pressure Relief Ball Valve - Auxiliary Pump
(431) A/Trans Auxiliary Fluid Pump Bolt M8 x 51 mm Qty: 4
(432) A/Trans Torque Damper Bearing Seal
(433) A/Trans Torque Damper Bearing Assembly
(434) A/Trans Torque Damper Bearing Retaining Ring
(435) A/Trans Torque Damper Fluid Seal Assembly
(436) A/Trans Torque Damper Seal Retaining Ring
(437) A/Trans Fluid Pump Seal
(438) A/Trans Auxiliary Fluid Pump Bolt M5 x 16 Qty: 1
(439) A/Trans Fluid Pump (O-Ring) Seal
(440) A/Trans Auxiliary Fluid Pump Motor Seal

© Copyright Chevrolet. All rights reserved

Control Valve Body Assembly (1 of 2)

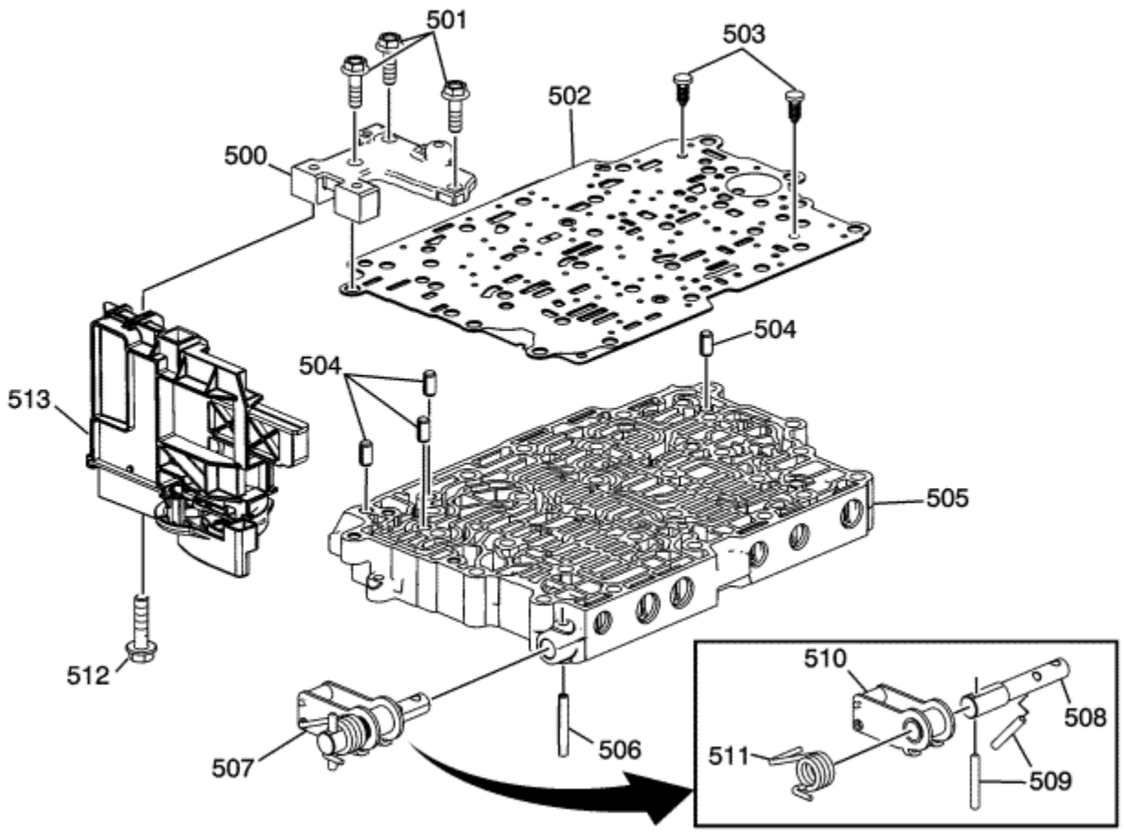

(500) A/Trans Manual Shift Shaft Position Switch Mounting Bracket Assembly
(501) Control Valve Channel Plate Bolt M6 x 20 mm Qty: 3
(502) Control Valve Body Spacer (w/Gasket) Plate Assembly
(503) Control Valve Body Spacer Retainer Qty: 2
(504) Control Valve Body Locator Pin Qty: 4
(505) Control Valve Body Assembly
(506) Manual Shift Shaft Detent Spring Retaining Pin

(507) Manual Shift Shaft Detent Assembly
(508) Manual Shift Shaft
(509) Manual Shift Shaft Detent Spring Pin
(510) Detent Lever
(511) Detent Lever Spring
(512) A/Trans Manual Shift Shaft Position Switch Bolt M6 x 25 mm Qty: 2
(513) A/Trans Manual Shift Shaft Position Switch Assembly

© Copyright Chevrolet. All rights reserved

Control Valve Body Assembly (2 of 2)

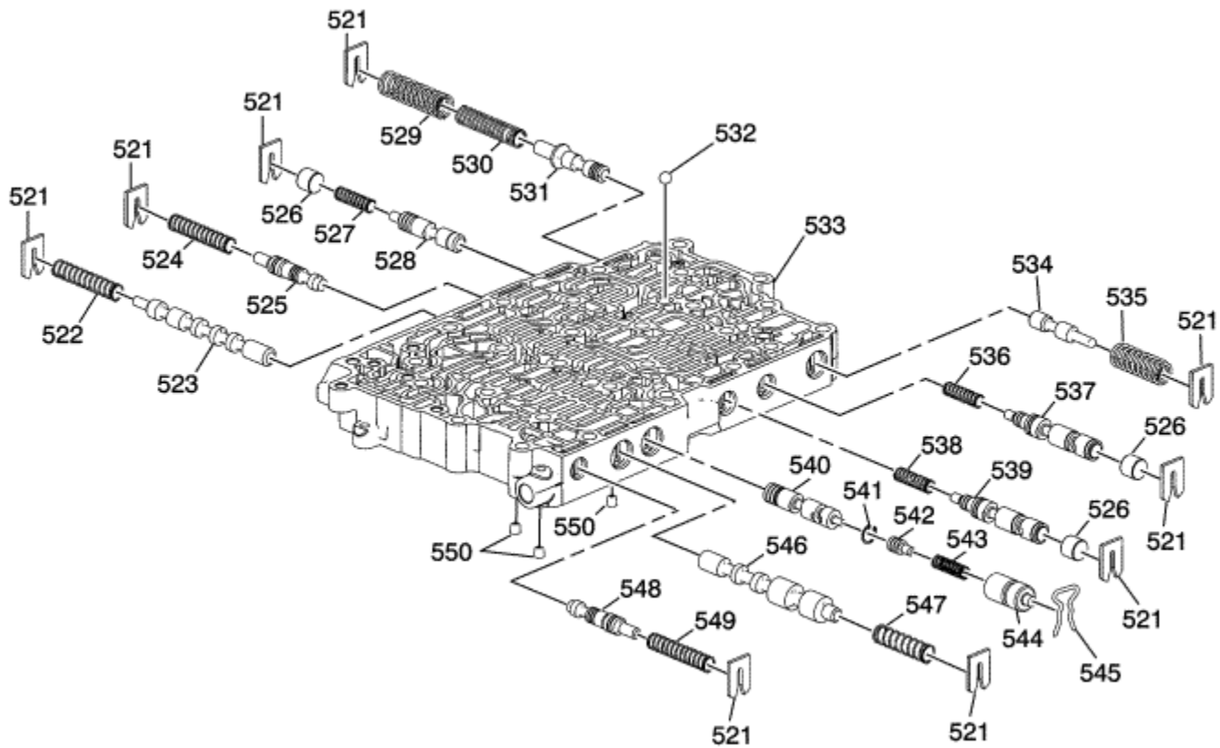

(521) Valve Retaining Clip
(522) Shift Solenoid Valve Spring
(523) Shift Solenoid Valve
(524) Variable Hi and 2-3-4 Clutch and Drive Motor/Generator Stator Cooling Regulator Boost Valve Spring
(525) Variable Hi and 2-3-4 Clutch and Drive Motor/Generator Stator Cooling Regulator Boost Valve
(526) Valve Bore Plug
(527) A/Trans Torque Damper Bypass Clutch Spring

(528) A/Trans Torque Damper Bypass Clutch Valve
(529) Actuator Feed Limit Valve Spring - Outer
(530) Actuator Feed Limit Valve Spring - Inner
(531) Actuator Feed Limit Valve
(532) Control Valve Body Ball Check Valve
(533) Control Valve Body
(534) Cooler Feed Limit Valve
(535) Cooler Feed Limit Valve Spring
(536) 1-3 Reverse Clutch and Generator/Drive Motor Stator Cooling Regulator Valve Spring
(537) 1-3 Reverse Clutch and Generator/Drive Motor Stator Cooling Regulator Valve
(538) Variable Hi and 2-3-4 Clutch and Drive Motor/Generator Stator Cooling Regulator Valve Spring
(539) Variable Hi and 2-3-4 Clutch and Drive Motor/Generator Stator Cooling Regulator Valve
(540) Variable Low and 1-2 Reverse and 4th Clutch and Drive Motor/Generator Stator Cooling Regulator Valve
(541) Variable Low and 1-2 Reverse and 4th Clutch and Drive Motor/Generator Stator Cooling Regulator Feedback Valve Retainer
(542) Variable Low and 1-2 Reverse and 4th Clutch and Drive Motor/Generator Stator Cooling Regulator Feedback Valve
(543) Variable Low and 1-2 Reverse and 4th Clutch and Drive Motor/Generator Stator Cooling Regulator Valve Spring
(544) Variable Low and 1-2 Reverse and 4th Clutch and Drive Motor/Generator Stator Cooling Regulator Feedback Valve Bushing
(545) Valve Retaining Clip
(546) Shift Solenoid Valve
(547) Shift Solenoid Valve Spring
(548) 1-2 Reverse and 4th Clutch Regulator Boost Valve
(549) 1-2 Reverse and 4th Clutch Regulator Boost Valve Spring
(550) Modulated Fluid Pressure Orifice

© Copyright Chevrolet. All rights reserved

Case Cover Assembly

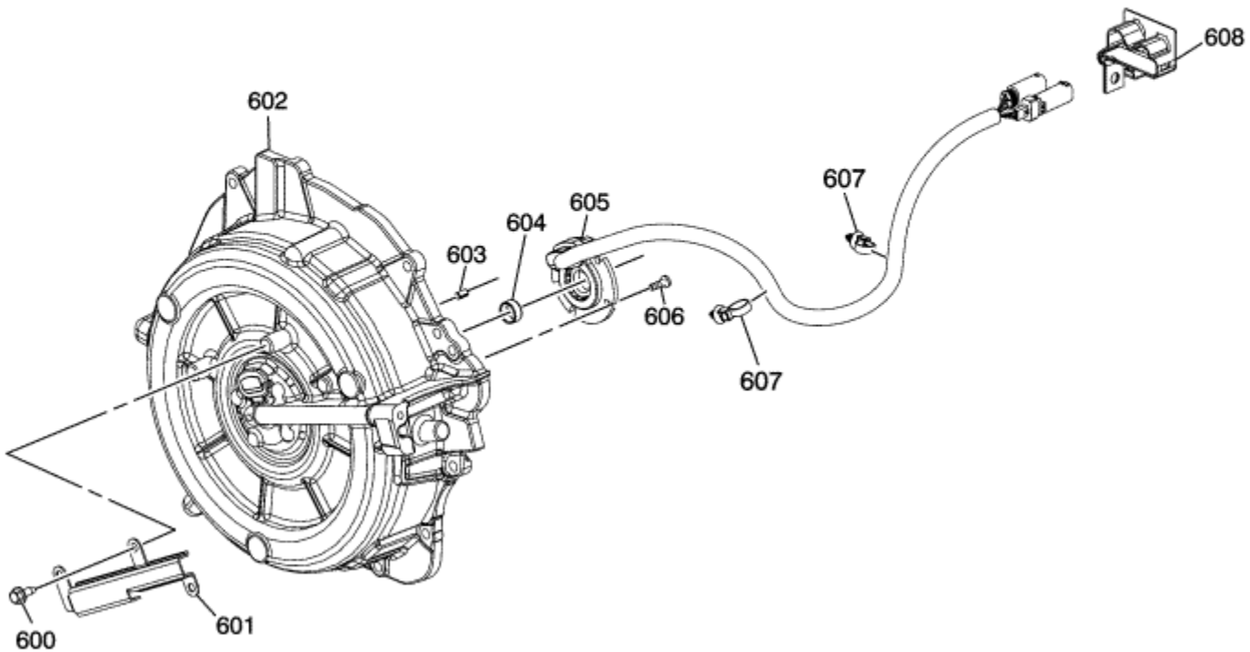

(600) A/Trans Control Wiring Harness Shield Bolt M6 x 16 mm Qty: 3 External
(601) A/Trans Control Wiring Harness Shield
(602) A/Transfer case Cover
(603) Drive Motor/Generator Position Sensor Pin
(604) Drive Motor/Generator Rotor Lubricant Seal Sleeve
(605) Drive Motor/Generator Position Sensor Stator Assembly
(606) Generator/Drive Motor Position Sensor Bolt M5 x 16 mm Qty: 3

(607) Wiring Harness Clip Qty: 2
(608) A/Trans Control Wiring Harness Connector Bracket

© Copyright Chevrolet. All rights reserved

Variable Hi and 2-3-4 Clutch Assembly

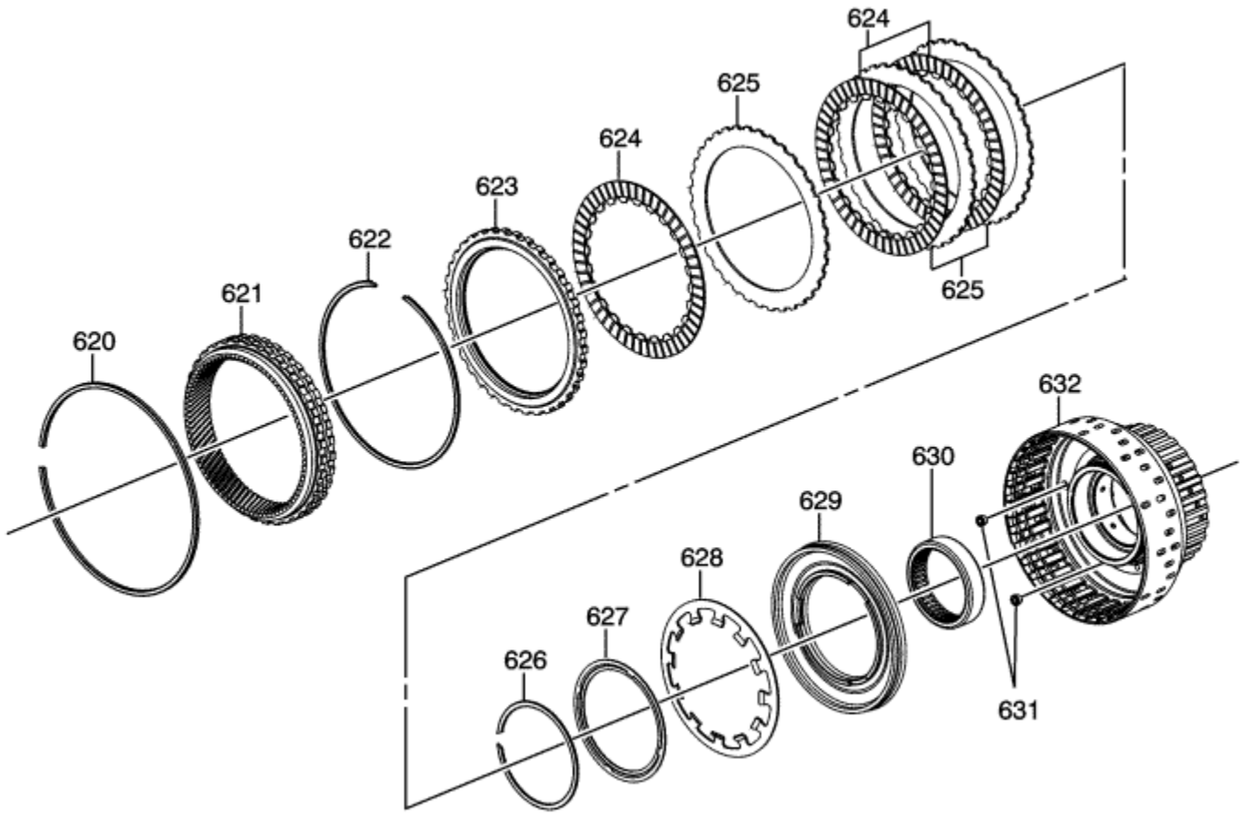

(620) Output Carrier Internal Gear Retaining Ring
(621) Output Carrier Internal Gear
(622) Variable Hi and 2-3-4 Clutch Backing Plate Retaining Ring - Selective
(623) Variable Hi and 2-3-4 Clutch Backing Plate
(624) Variable Hi and 2-3-4 Clutch Plate Assembly - Friction
(625) Variable Hi and 2-3-4 Clutch Plate
(626) Variable Hi and 2-3-4 Clutch Spring Retaining Ring

(627) Variable Hi and 2-3-4 Clutch Spring Retainer
(628) Variable Hi and 2-3-4 Clutch Spring
(629) Variable Hi and 2-3-4 Clutch Piston Assembly
(630) Centre Support Roller Bearing Assembly
(631) Variable Hi and 2-3-4 Clutch Housing Valve
(632) Variable Hi and 2-3-4 Clutch Housing Assembly

© Copyright Chevrolet. All rights reserved

Centre (w/Variable Low and 1-2 Reverse Clutch) Support Assembly (1 of 2)

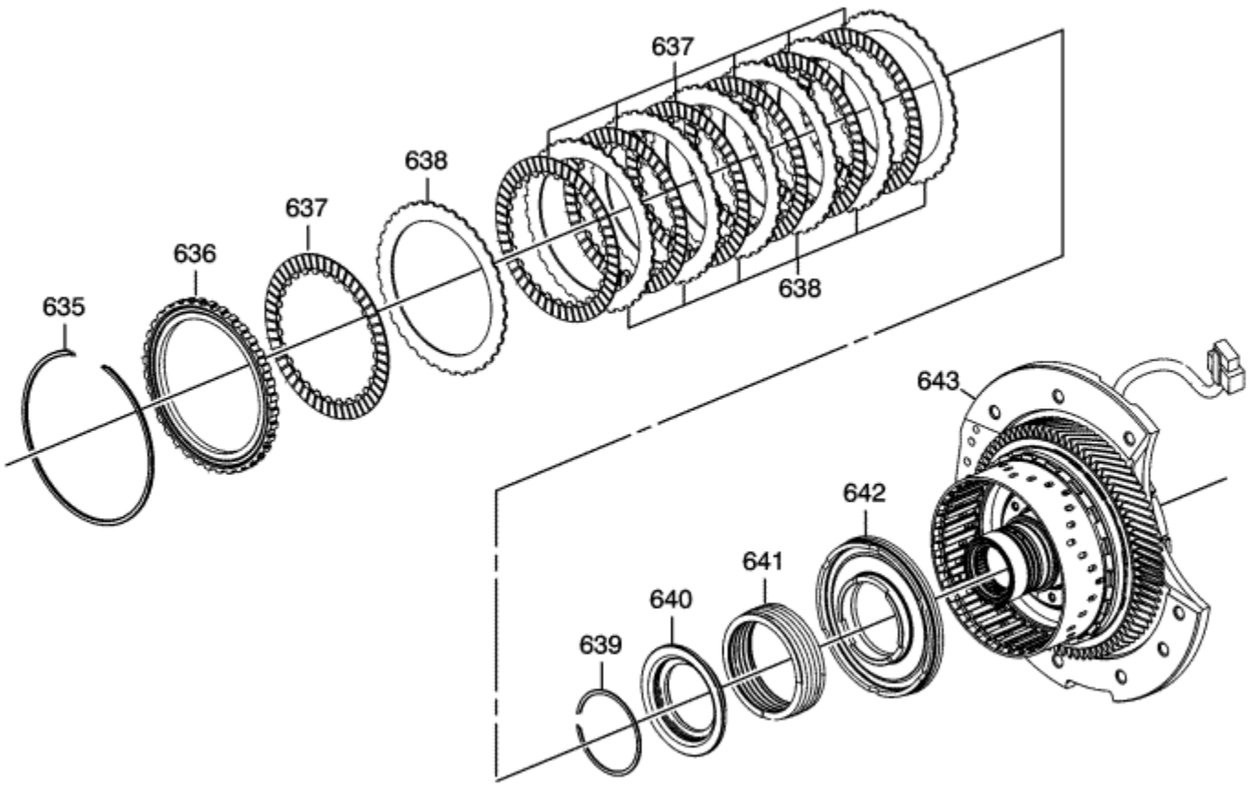

(635) Variable Low and 1-2 Reverse Clutch Backing Plate Retaining Ring - Selective
(636) Variable Low and 1-2 Reverse Clutch Backing Plate
(637) Variable Low and 1-2 Reverse Clutch Plate Assembly - Friction
(638) Variable Low and 1-2 Reverse Clutch Plate
(639) Variable Low and 1-2 Reverse Clutch Spring Retaining Washer Retaining Ring
(640) Variable Low and 1-2 Reverse Clutch Spring Retainer
(641) Variable Low and 1-2 Reverse Clutch Spring

(642) Variable Low and 1-2 Reverse Clutch Piston Assembly
(643) Centre Support Assembly

© Copyright Chevrolet. All rights reserved

Centre (w/Variable Low and 1-2 Reverse Clutch) Support Assembly (2 of 2)

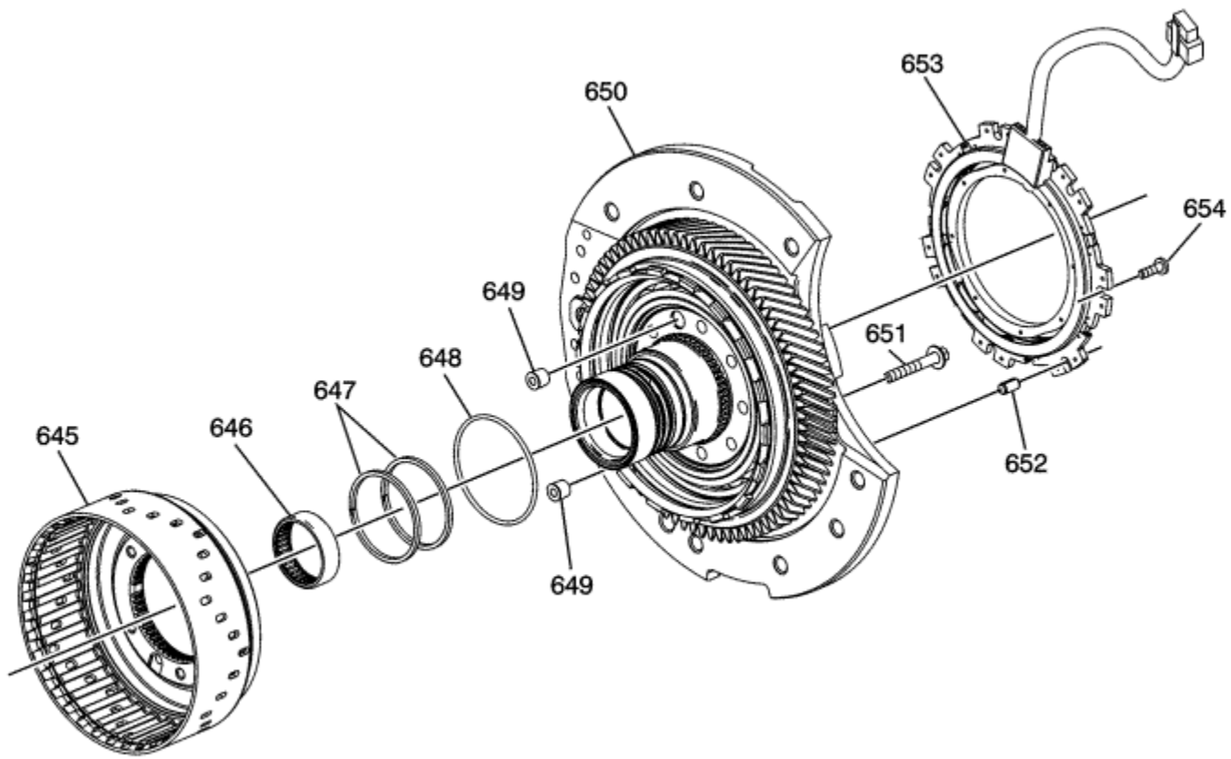

(645) Variable Low and 1-2 Reverse Clutch Housing Assembly
(646) Input Sun Gear Shaft Roller Bearing Assembly
(647) Variable Hi and 2-3-4 Clutch Seal
(648) Variable Low and 1-2 Reverse Clutch Housing (O-Ring) Seal
(649) Variable Low and 1-2 Reverse Clutch Housing Fluid Passage Seal Qty: 2
(650) Centre Support
(651) Variable Low and 1-2 Reverse Clutch Housing Bolt M6 x 39.5 mm Qty: 7

(652) Locating Pin
(653) Generator/Drive Motor Position Sensor Stator Assembly
(654) Drive Motor Generator Position Switch Sensor Bolt M5 x 16 mm Qty: 3

© Copyright Chevrolet. All rights reserved

1-3 Reverse Clutch Assembly

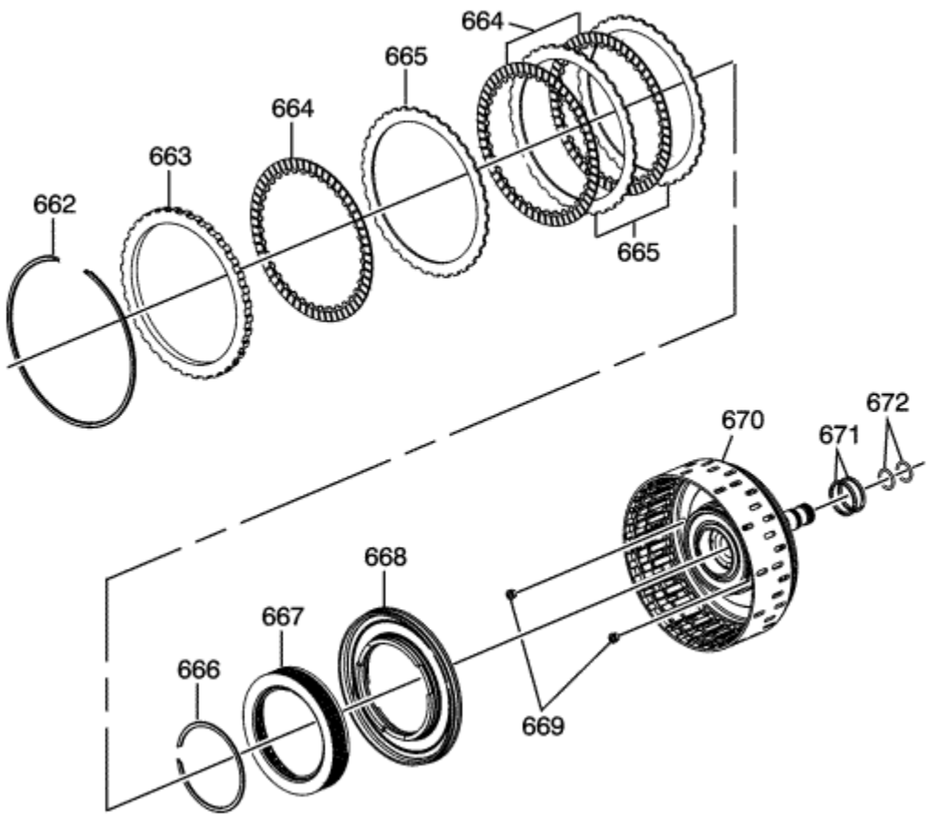

(662) 1-3 Reverse Clutch Backing Plate Retaining Ring - Selective
(663) 1-3 Reverse Clutch Backing Plate
(664) 1-3 Reverse Clutch Plate Assembly - Friction
(665) 1-3 Reverse Clutch Plate
(666) 1-3 Reverse Clutch Spring Retaining Ring
(667) 1-3 Reverse Clutch Spring
(668) 1-3 Reverse Clutch Piston

(669) 1-3 Reverse Clutch Housing Ball Valve
(670) 1-3 Reverse Clutch (w/Input Shaft) Housing Assembly
(671) Turbine Shaft Fluid Seal Ring Qty: 2
(672) Input Shaft Seal Qty: 2

© Copyright Chevrolet. All rights reserved

Front Differential Drive Pinion (w/Transfer Gear) Gear Assembly

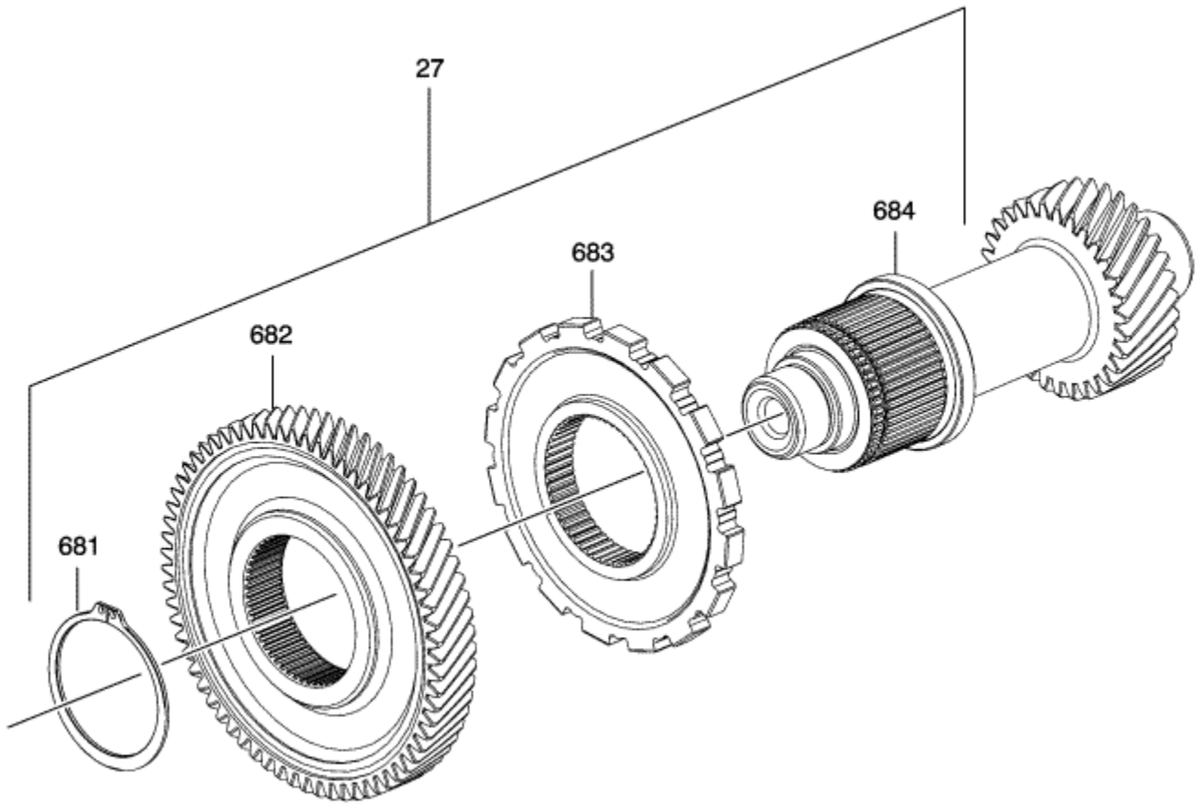

(27) Front Differential Drive Pinion (w/Transfer Gear) Gear Assembly
(681) Front Differential Transfer Driven Gear Retaining Ring
(682) Front Differential Transfer Driven Gear
(683) Park Gear
(684) Front Differential Drive Pinion Gear

© Copyright Chevrolet. All rights reserved

Front Differential Carrier Assembly

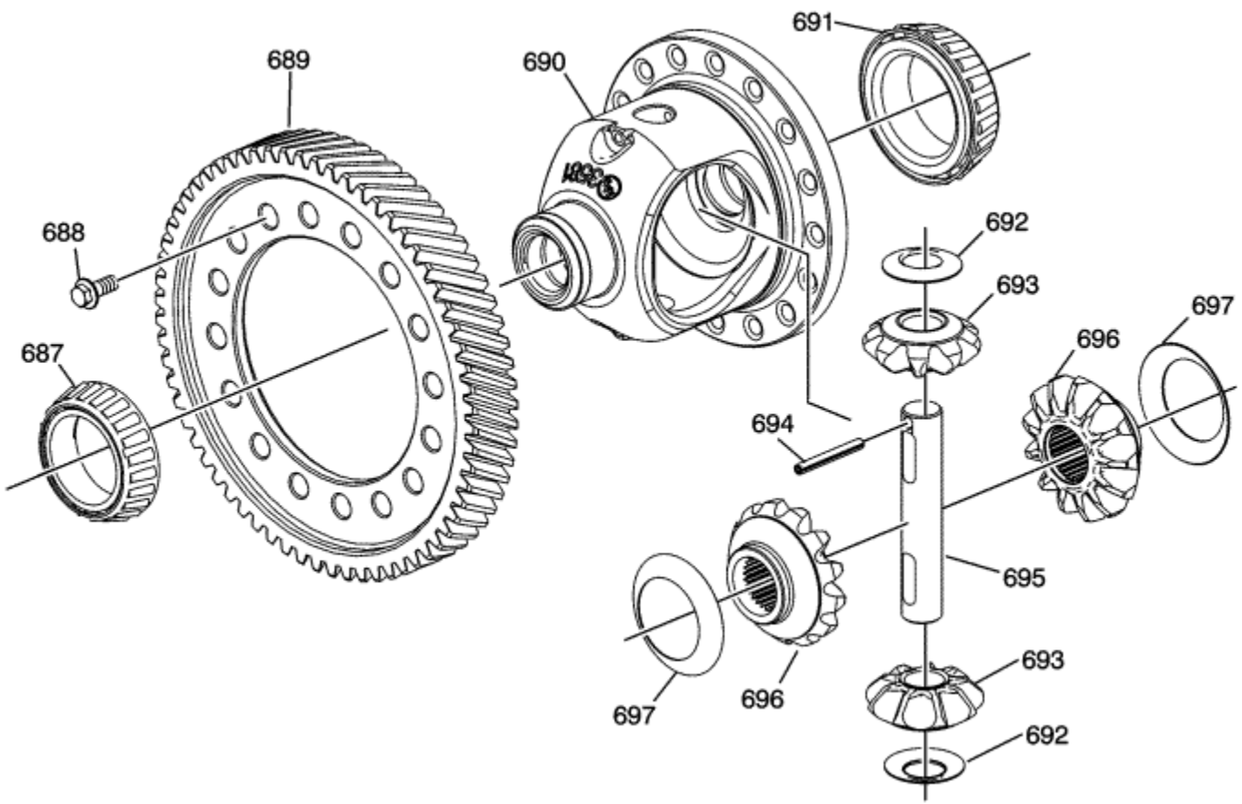

(687) Front Differential Carrier Bearing Assembly (LHS)
(688) Front Differential Ring Gear Bolt M10 x 25 Qty: 16
(689) Front Differential Ring Gear
(690) Front Differential Carrier Assembly
(691) Front Differential Carrier Bearing Assembly (RHS)
(692) Differential Pinion Gear Thrust Washer
(693) Differential Pinion Gear

(694) Differential Carrier Locator Pin
(695) Differential Pinion Gear Shaft
(696) Differential Side Gear
(697) Differential Side Gear Thrust Washer

© Copyright Chevrolet. All rights reserved

Park System Components

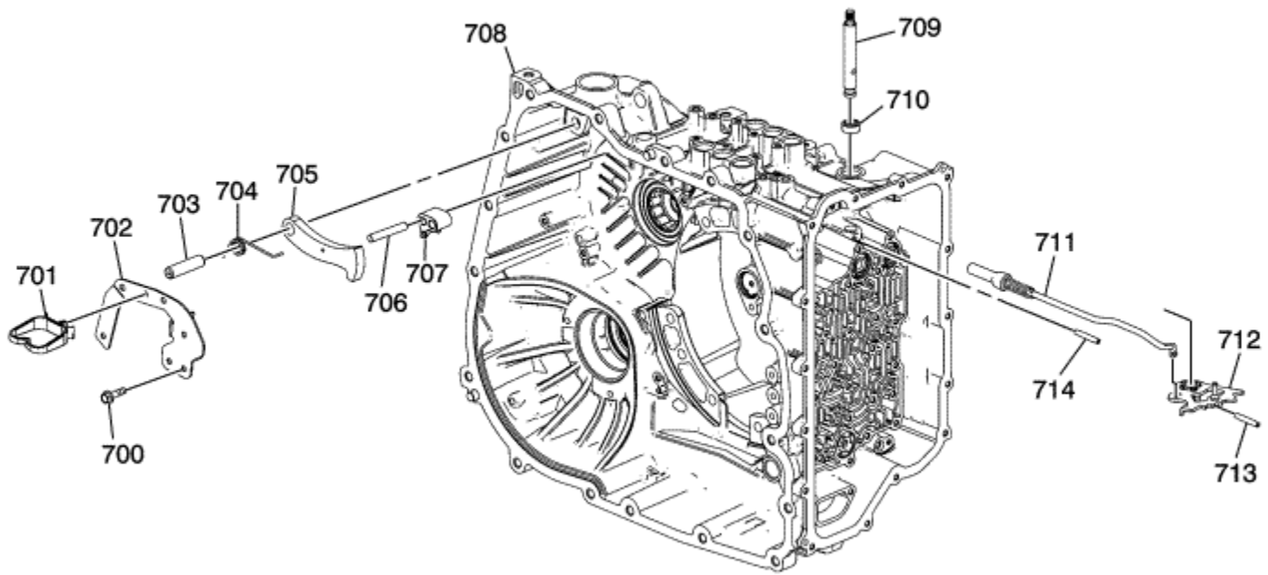

(700) Park Pawl Actuator Bolt M6 x 20 mm Qty: 2
(701) Wiring Harness Conduit Bracket
(702) Park Pawl Actuator Bracket
(703) Park Pawl Shaft
(704) Park Pawl Spring
(705) Park Pawl
(706) Park Pawl Actuator Guide Pin Qty: 2

(707) Park Pawl Actuator Guide
(708) A/Trans Case
(709) Manual Shift Shaft
(710) Manual Shift Shaft Seal
(711) Park Pawl Actuator Assembly
(712) Manual Shift Shaft Detent Lever Assembly
(713) Manual Shift Shaft Detent Lever Hub Pin
(714) Manual Shift Shaft Pin

© Copyright Chevrolet. All rights reserved

Seal Locations #1

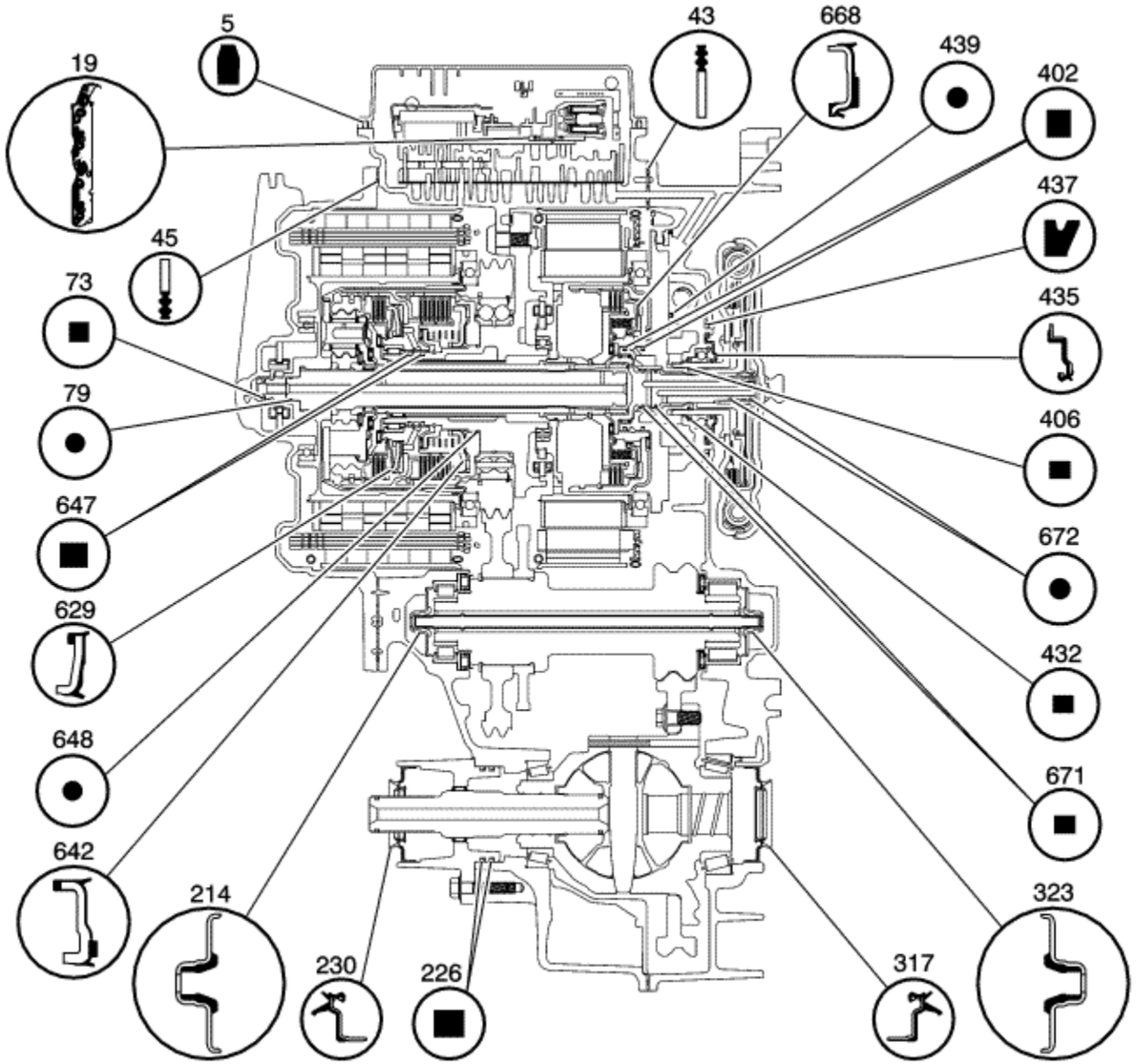

(5) Control Valve Body Cover Gasket
(19) Control Solenoid Valve Filter Plate
(43) Torque Damper Housing Outer Seal
(45) A/Trans Case Cover Gasket
(73) Drive Motor/Generator Rotor Lubricant Seal
(79) Output Sun Gear Shaft Lubricant O-Ring Seal
(214) Front Differential Drive Pinion Gear Lubricant Dam
(226) A/Trans Case Extension Seal Qty: 2
(230) Front Wheel Drive Shaft Oil Seal Assembly (LHS)
(317) Front Wheel Drive Shaft Oil Seal Assembly (RHS)
(323) Front Differential Drive Pinion Gear Lubricant Dam
(402) 1-3 Reverse Clutch Housing Seal
(406) A/Trans Fluid Pump Seal
(432) A/Trans Torque Damper Bearing Seal
(435) A/Trans Torque Damper Fluid Seal Assembly
(437) A/Trans Fluid Pump (O-Ring) Seal
(439) A/Trans Fluid Pump Seal
(629) Variable Hi and 2-3-4 Clutch Piston Assembly
(642) Variable Low and 1-2 Reverse Clutch Piston Assembly
(647) Variable Hi and 2-3-4 Clutch Seal
(648) Variable Low and 1-2 Reverse Clutch Housing (O-Ring) Seal
(668) 1-3 Reverse Clutch Piston
(671) Input Shaft Seals Qty: 2
(672) Input Shaft Seals Qty: 2

© Copyright Chevrolet. All rights reserved

Seal Locations #2

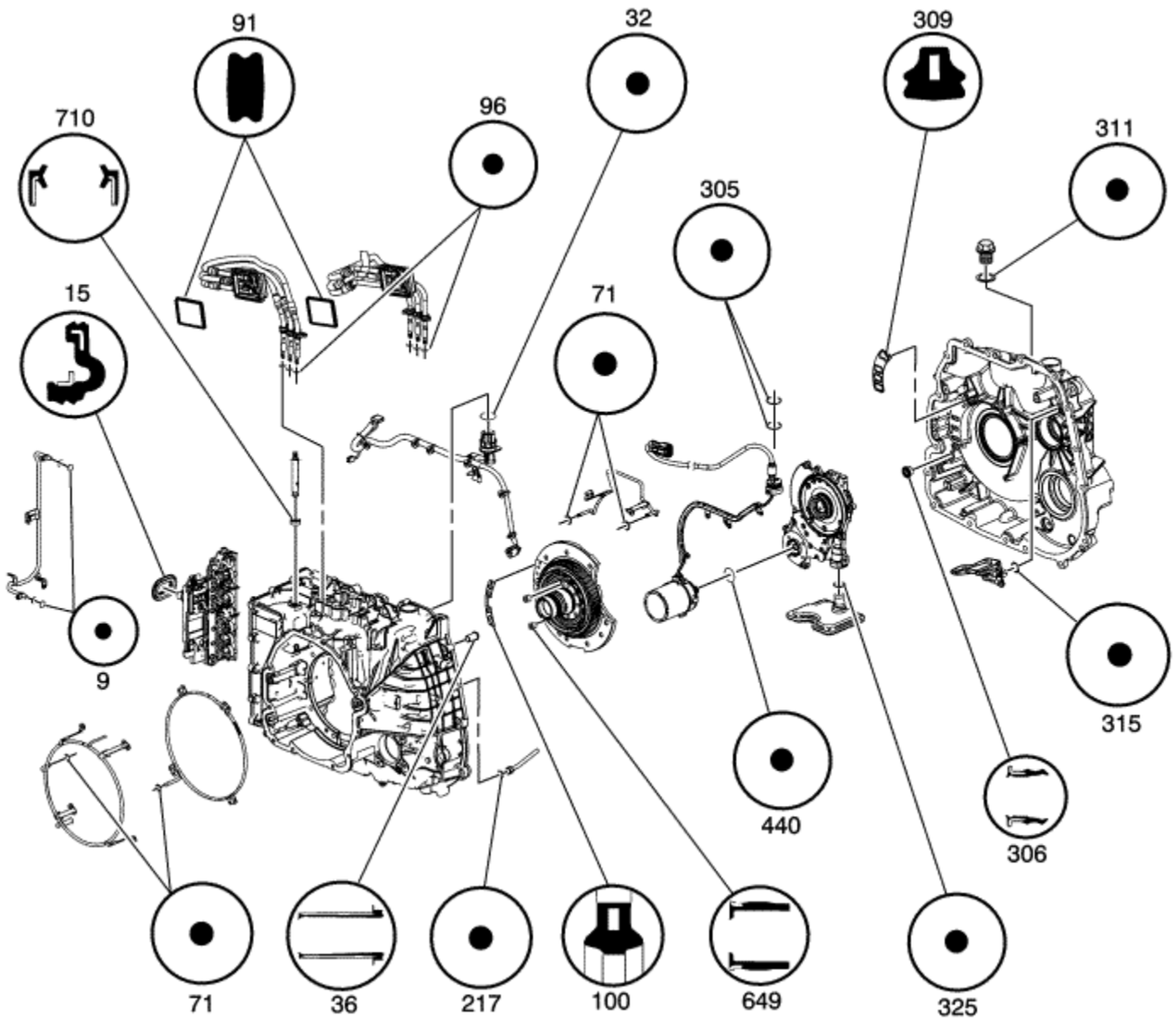

(9) Transmission Fluid Cooler Outlet Seal
(15) Control Valve Body Cover Wiring Connector Hole Seal
(32) Wiring Connector Seal
(36) A/Trans Pump Fluid Outlet Seal Assembly
(71) Drive Motor/Generator Stator Cooling Tube Seal Qty: 4
(91) Drive Motor/Generator Power Inverter Module Cable Housing Cover Seal
(96) Drive Motor/Generator Power Inverter Module Cable Assembly Seal - 3 Phase
(100) Centre Support Oil Passage Seal
(217) Front Differential Carrier Lubricant Pipe Seal
(305) O-Ring Seal
(306) A/Trans Pump Fluid Outlet Seal Assembly
(309) A/Trans Fluid Pump Seal Assembly
(311) Filler Hole Plug Seal
(315) A/Trans Fluid Trough Seal
(325) A/Trans Fluid Filter Seal
(440) A/Trans Auxiliary Fluid Pump Motor Seal
(649) Variable Low and 1-2 Reverse Clutch Housing Fluid Passage Seal Qty: 2
(710) Manual Shift Shaft Seal

© Copyright Chevrolet. All rights reserved

Torque Damper and Differential Housing - Case Side

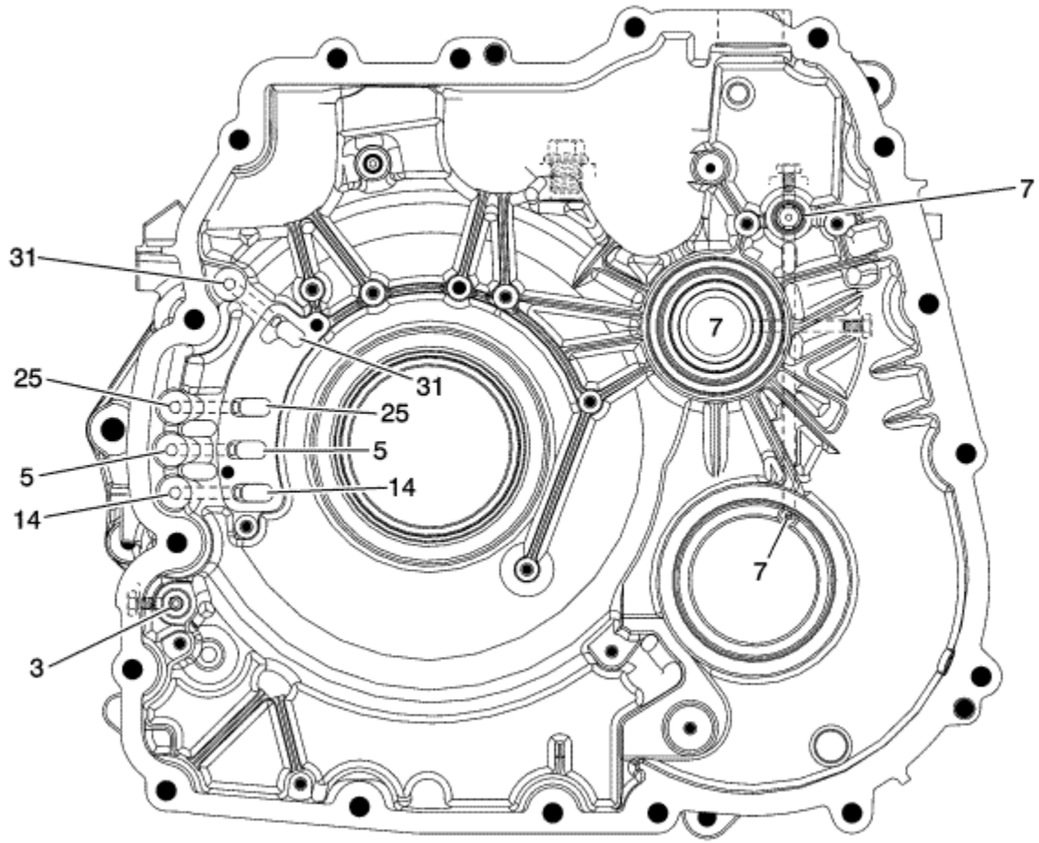

(3) Line or Auxiliary Line
(5) Cooler Feed/Lubrication
(7) Lubrication
(14) PCS Line
(25) Damper Clutch
(31) 13 Reverse Clutch

© Copyright Chevrolet. All rights reserved

Fluid Pump Body - Torque Damper and Differential Housing Side

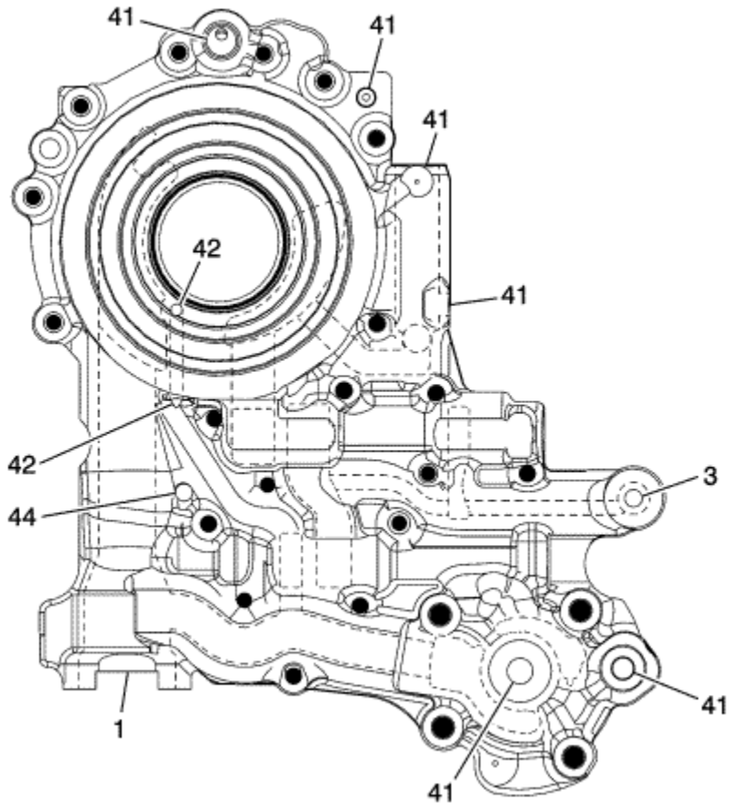

(1) Suction
(3) Line or Auxiliary Line
(41) Exhaust
(42) Seal Drainback
(44) Void

© Copyright Chevrolet. All rights reserved

Fluid Pump Body - Fluid Pump Cover Side

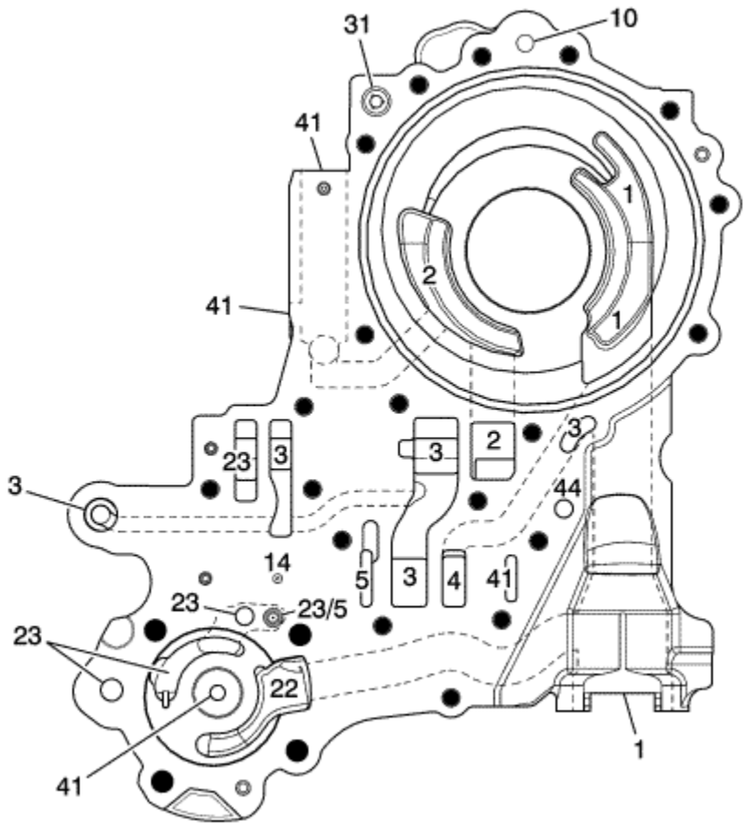

(1) Suction
(2) Line
(3) Line or Auxiliary Line
(4) Decrease
(5) Cooler Feed/Lubrication
(10) Damper Clutch Charge
(14) PCS Line

(22) Auxiliary Suction
(23) Auxiliary Line
(31) 13 Reverse Clutch
(41) Exhaust
(44) Void

© Copyright Chevrolet. All rights reserved

Fluid Pump Cover - Fluid Pump Body Side

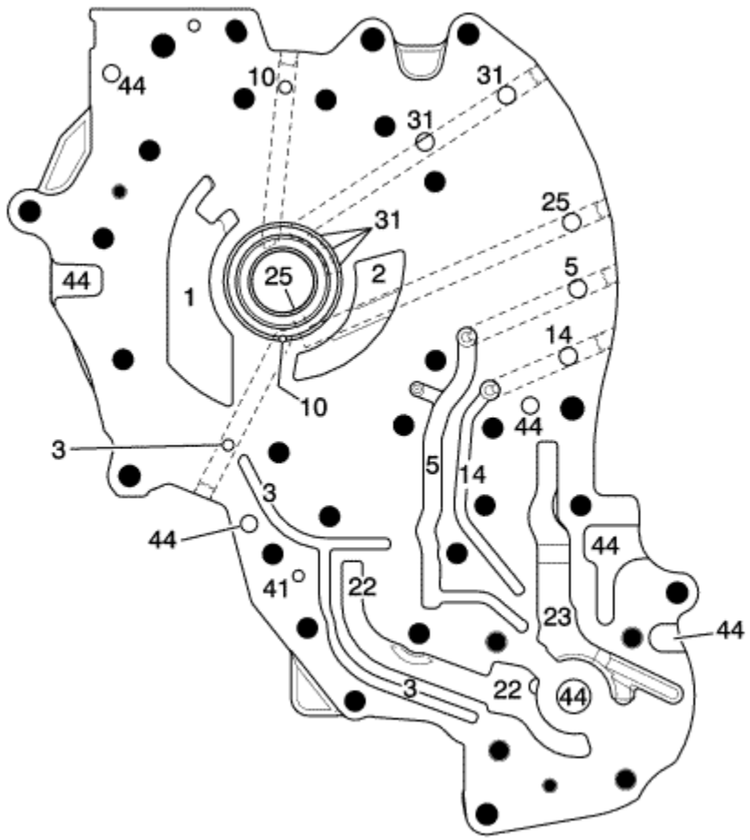

(1) Suction
(2) Line
(3) Line or Auxiliary Line
(5) Cooler Feed/Lubrication
(10) Damper Clutch Charge
(14) PCS Line
(22) Auxiliary Suction

(23) Auxiliary Line
(25) Damper Clutch
(31) 13 Reverse Clutch
(41) Exhaust
(44) Void

© Copyright Chevrolet. All rights reserved

Fluid Pump Cover - Case Side

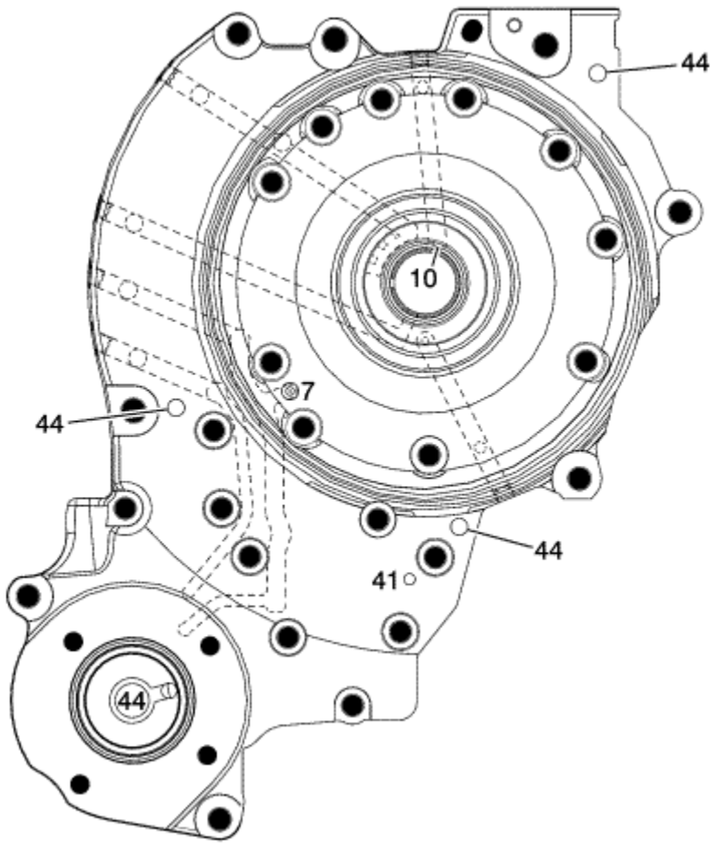

(7) Lubrication
(10) Damper Clutch Charge
(41) Exhaust
(44) Void

© Copyright Chevrolet. All rights reserved

Centre Support - Case Side

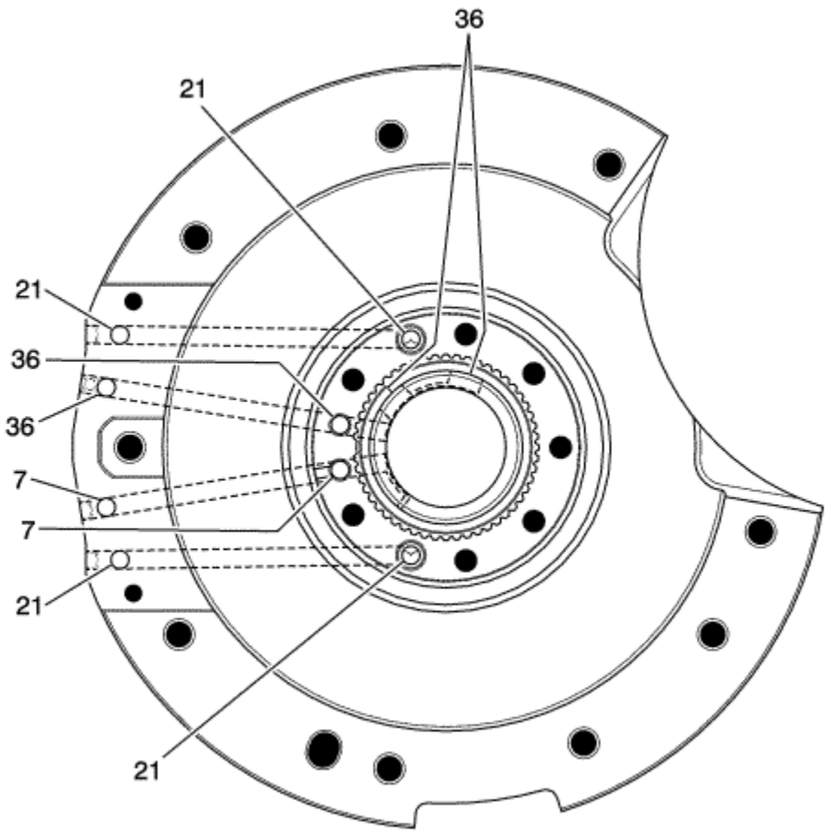

(7) Lubrication
(21) VL 12 Reverse Clutch
(36) VH 234 Clutch

© Copyright Chevrolet. All rights reserved

Case - Torque Damper and Differential Housing Side

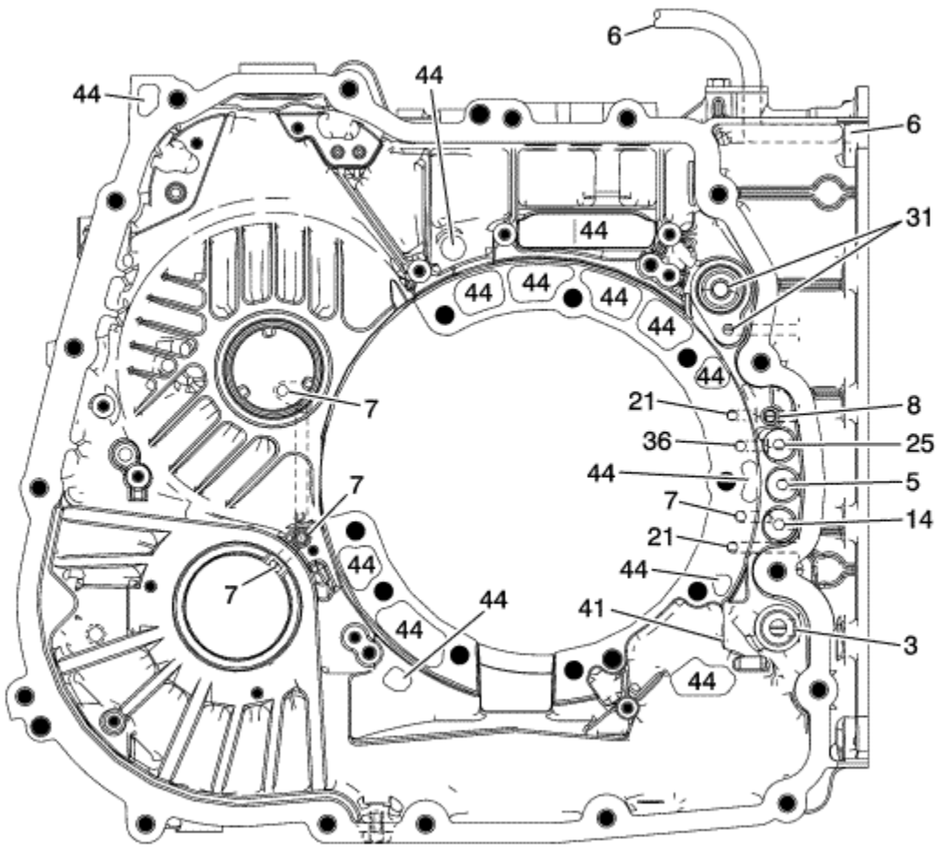

(3) Line or Auxiliary Line
(5) Cooler Feed/Lubrication
(6) Cooler Feed Limit
(7) Lubrication
(8) Motor A Cooling
(14) PCS Line
(21) VL 12 Reverse Clutch

(25) Damper Clutch
(31) 13 Reverse Clutch
(36) VH 234 Clutch
(41) Exhaust
(44) Void

© Copyright Chevrolet. All rights reserved

Case - Case Cover Side

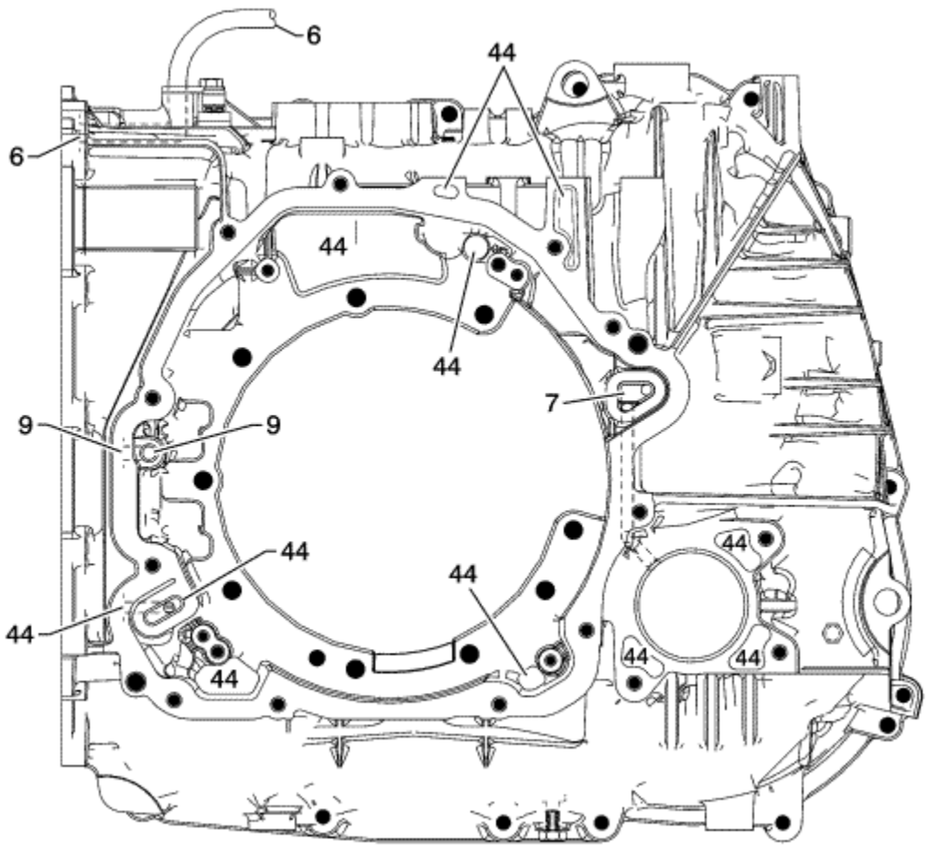

(6) Cooler Feed Limit
(7) Lubrication
(9) Motor B Cooling
(44) Void

© Copyright Chevrolet. All rights reserved

Case Cover - Case Side

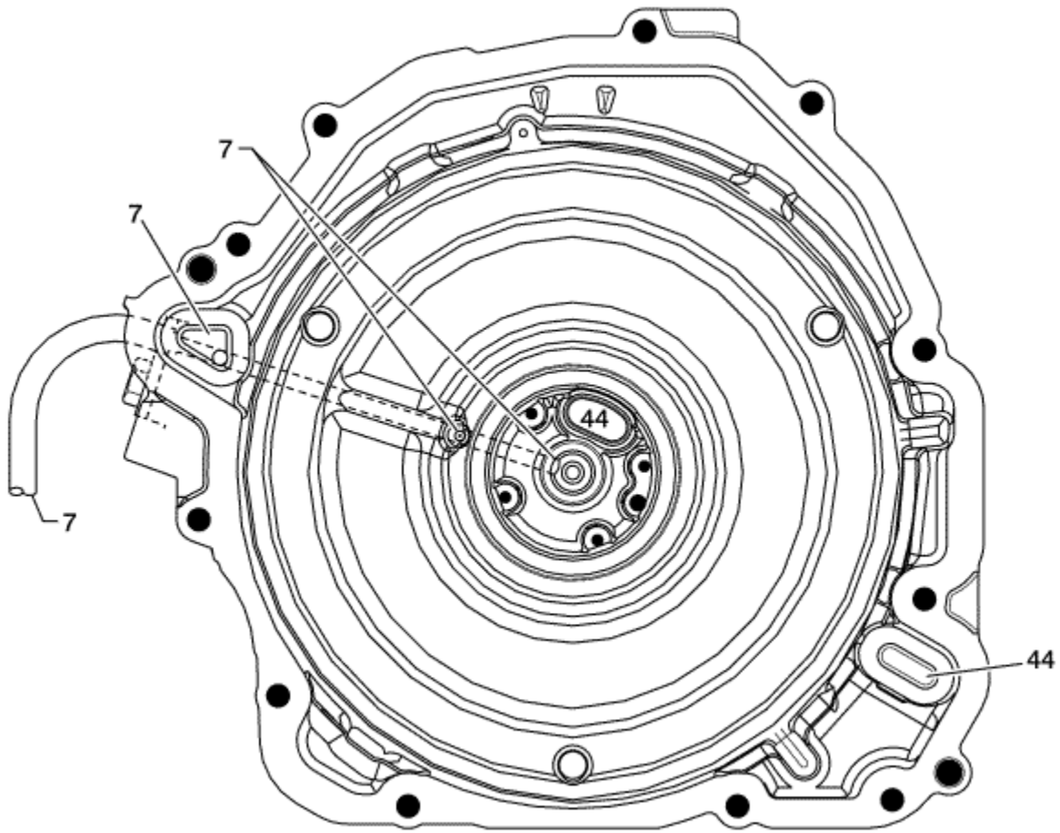

(7) Lubrication
(44) Void

© Copyright Chevrolet. All rights reserved

Case - Control Valve Body Side

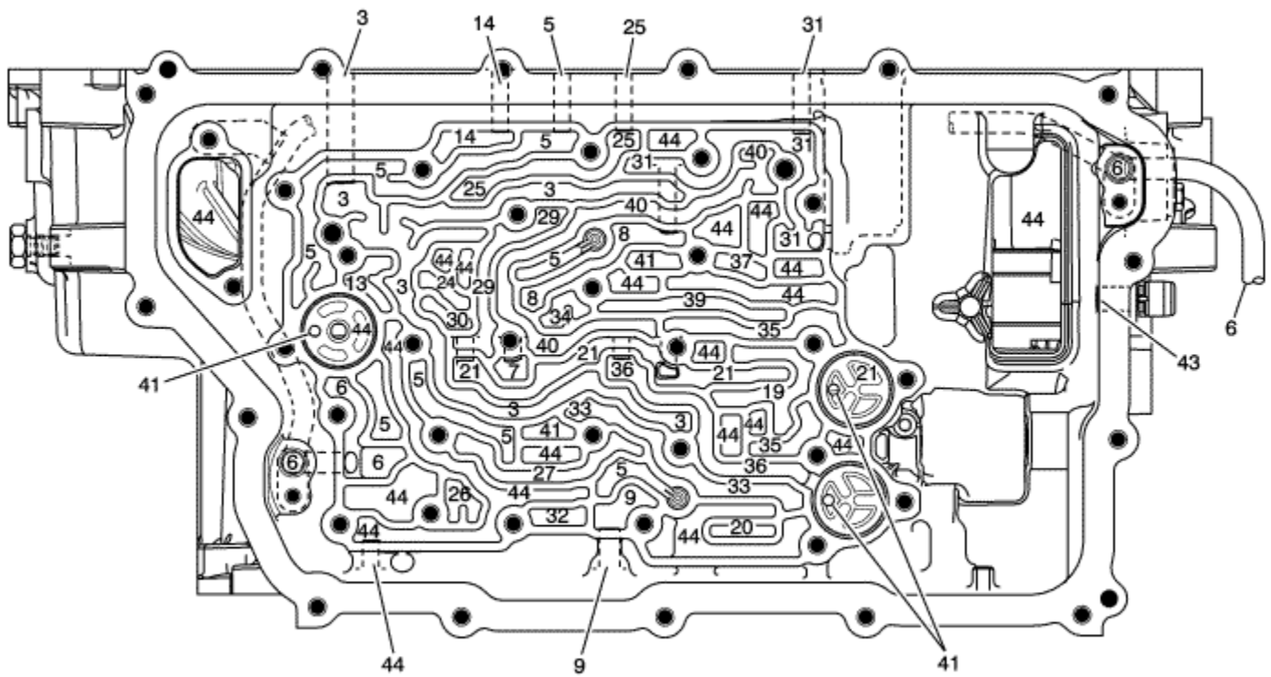

(3) Line or Auxiliary Line
(5) Cooler Feed/Lubrication
(6) Cooler Feed Limit
(7) Lubrication
(8) Motor A Cooling
(9) Motor B Cooling
(13) Actuator Feed Limit

(14) PCS Line
(19) VL 12 Reverse/4th Clutch Feed
(20) VL 12 Reverse/4th Clutch Feedback
(21) VL 12 Reverse Clutch
(24) PCS 5 Signal
(25) Damper Clutch
(26) PSC 4 Signal
(27) Solenoid 2 Signal
(29) 13 Reverse Clutch/A Cooling Feed
(30) 13 Reverse Clutch Feedback
(31) 13 Reverse Clutch
(32) PCS 2 Signal
(33) VH 234 Clutch/B Cooling Feed
(34) VH 234 Clutch Feedback
(35) VH 234 Clutch Feed
(36) VH 234 Clutch
(37) Solenoid 1 Signal
(39) B Cooling Supply
(40) Exhaust Backfill
(41) Exhaust
(43) Vent
(44) Void

© Copyright Chevrolet. All rights reserved

Control Valve Body Spacer Plate - Case Side

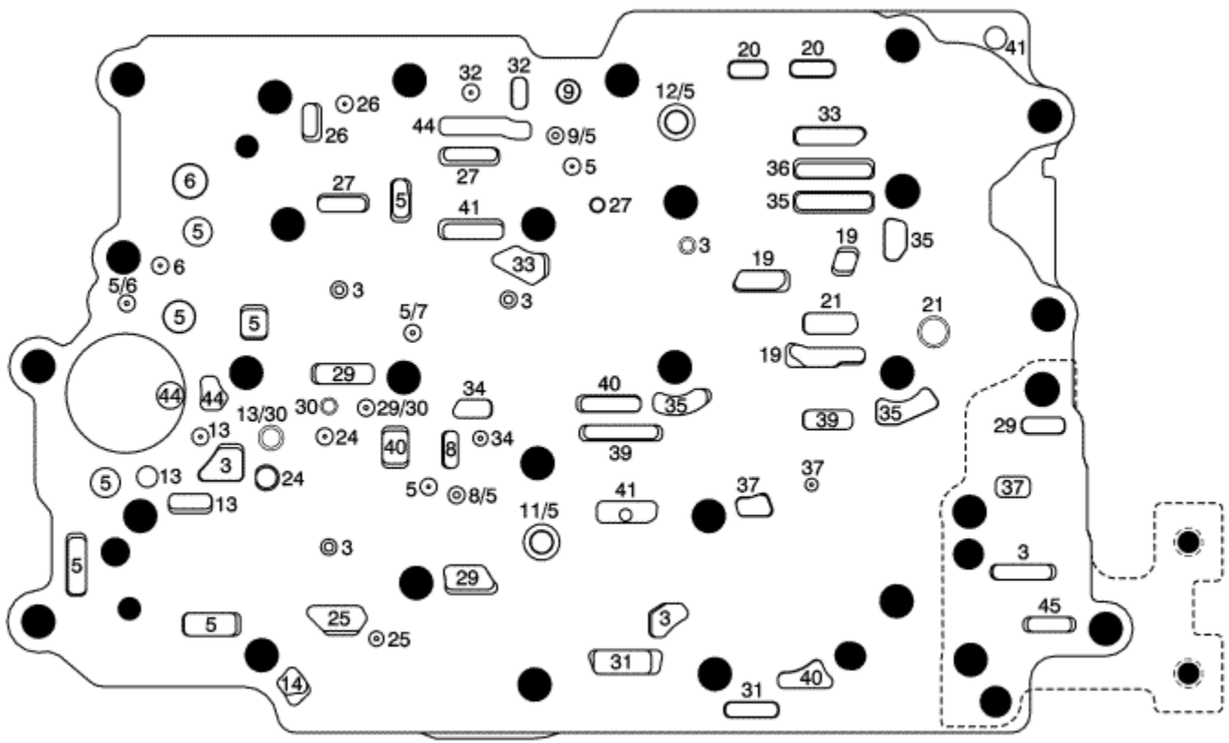

(3) Line or Auxiliary Line
(5) Cooler Feed/Lubrication
(6) Cooler Feed Limit
(7) Lubrication
(8) Motor A Cooling
(9) Motor B Cooling
(11) A Cooling Feed

(12) B Cooling Feed
(13) Actuator Feed Limit
(14) PCS Line
(19) VL 12 Reverse/4th Clutch Feed
(20) VL 12 Reverse/4th Clutch Feedback
(21) VL 12 Reverse Clutch
(24) PCS 5 Signal
(25) Damper Clutch
(26) PSC 4 Signal
(27) Solenoid 2 Signal
(29) 13 Reverse Clutch/A Cooling Feed
(30) 13 Reverse Clutch Feedback
(31) 13 Reverse Clutch
(32) PCS 2 Signal
(33) VH 234 Clutch/B Cooling Feed
(34) VH 234 Clutch Feedback
(35) VH 234 Clutch Feed
(36) VH 234 Clutch
(37) Solenoid 1 Signal
(39) B Cooling Supply
(40) Exhaust Backfill
(41) Exhaust
(44) Void
(45) PCS 6 Signal

© Copyright Chevrolet. All rights reserved

Control Valve Body Spacer Plate - Control Valve Body Side

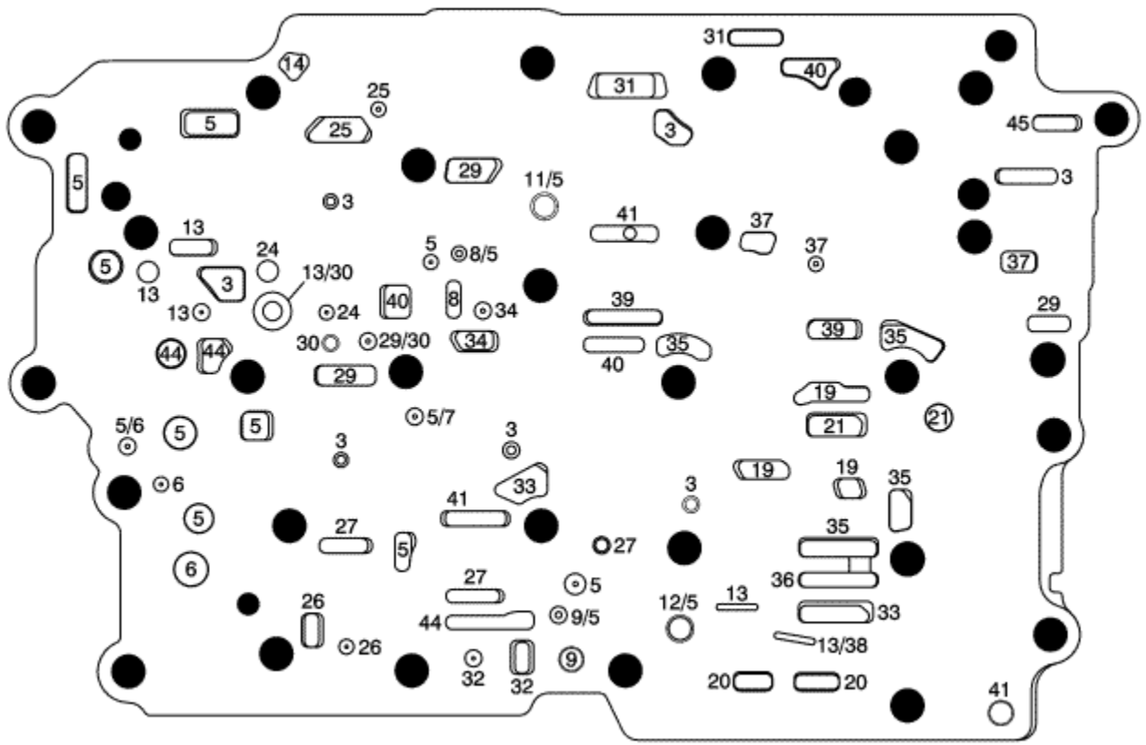

(3) Line or Auxiliary Line
(5) Cooler Feed/Lubrication
(6) Cooler Feed Limit
(7) Lubrication
(8) Motor A Cooling
(9) Motor B Cooling
(11) A Cooling Feed

(12) B Cooling Feed
(13) Actuator Feed Limit
(14) PCS Line
(19) VL 12 Reverse/4th Clutch Feed
(20) VL 12 Reverse/4th Clutch Feedback
(21) VL 12 Reverse Clutch
(24) PCS 5 Signal
(25) Damper Clutch
(26) PSC 4 Signal
(27) Solenoid 2 Signal
(29) 13 Reverse Clutch/A Cooling Feed
(30) 13 Reverse Clutch Feedback
(31) 13 Reverse Clutch
(32) PCS 2 Signal
(33) VH 234 Clutch/B Cooling Feed
(34) VH 234 Clutch Feedback
(35) VH 234 Clutch Feed
(36) VH 234 Clutch
(37) Solenoid 1 Signal
(38) PS4
(39) B Cooling Supply
(40) Exhaust Backfill
(41) Exhaust
(44) Void
(45) PCS 6 Signal

© Copyright Chevrolet. All rights reserved

Control Valve Body - Case Side

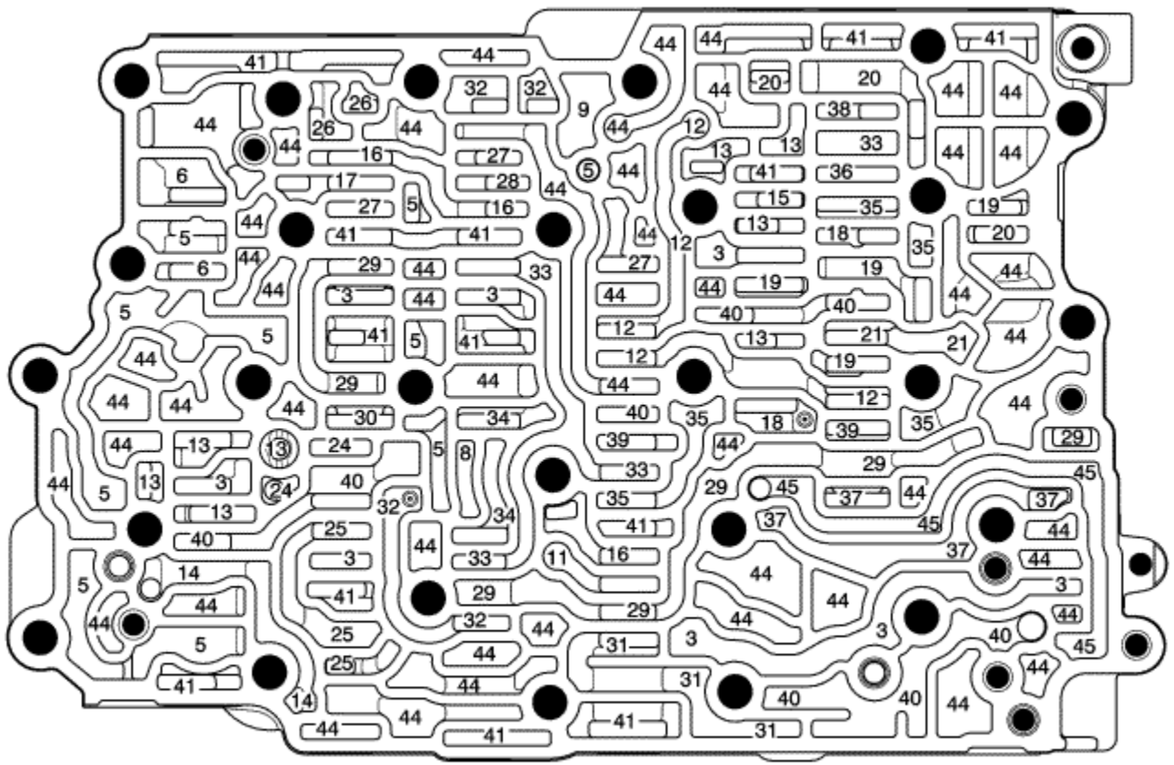

(3) Line or Auxiliary Line
(5) Cooler Feed/Lubrication
(6) Cooler Feed Limit
(8) Motor A Cooling
(9) Motor B Cooling
(11) A Cooling Feed
(12) B Cooling Feed

(13) Actuator Feed Limit
(14) PCS Line
(15) PS5
(16) Actuator Feed Limit/Backfill
(17) PS1
(18) PCS 3 Signal
(19) VL 12 Reverse/4th Clutch Feed
(20) VL 12 Reverse/4th Clutch Feedback
(21) VL 12 Reverse Clutch
(24) PCS 5 Signal
(25) Damper Clutch
(26) PSC 4 Signal
(27) Solenoid 2 Signal
(28) PS3
(29) 13 Reverse Clutch/A Cooling Feed
(30) 13 Reverse Clutch Feedback
(31) 13 Reverse Clutch
(32) PCS 2 Signal
(33) VH 234 Clutch/B Cooling Feed
(34) VH 234 Clutch Feedback
(35) VH 234 Clutch Feed
(36) VH 234 Clutch
(37) Solenoid 1 Signal
(38) PS4
(39) B Cooling Supply
(40) Exhaust Backfill
(41) Exhaust
(44) Void
(45) PCS 6 Signal

© Copyright Chevrolet. All rights reserved

Control Valve Body - Control Valve Channel Plate Side

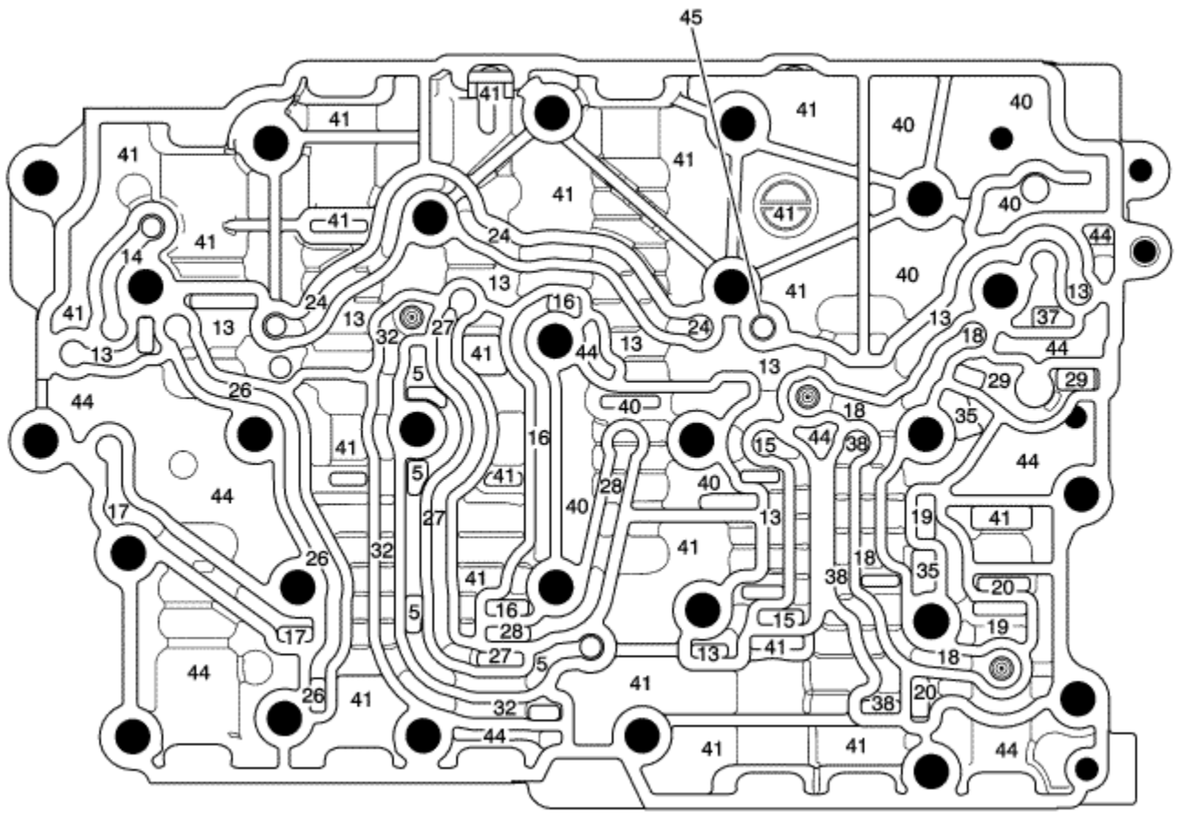

(5) Cooler Feed/Lubrication
(13) Actuator Feed Limit
(14) PCS Line
(15) PS5
(16) Actuator Feed Limit/Backfill
(17) PS1
(18) PCS 3 Signal

(19) VL 12 Reverse/4th Clutch Feed
(20) VL 12 Reverse/4th Clutch Feedback
(24) PCS 5 Signal
(26) PSC 4 Signal
(27) Solenoid 2 Signal
(28) PS3
(29) 13 Reverse Clutch/A Cooling Feed
(32) PCS 2 Signal
(35) VH 234 Clutch Feed
(37) Solenoid 1 Signal
(38) PS4
(40) Exhaust Backfill
(41) Exhaust
(44) Void
(45) PCS 6 Signal

© Copyright Chevrolet. All rights reserved

Control Valve Channel Plate - Control Valve Body Side

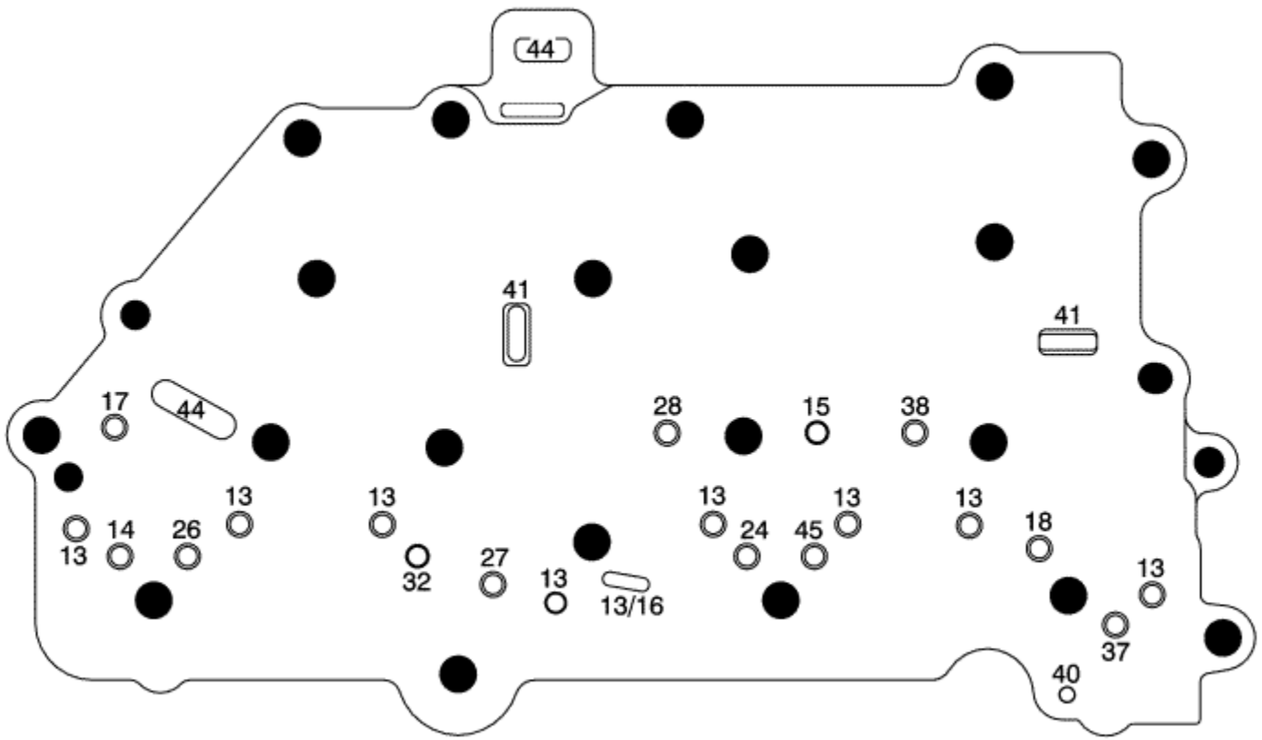

(13) Actuator Feed Limit
(14) PCS Line
(15) PS5
(16) Actuator Feed Limit/Backfill
(17) PS1
(18) PCS 3 Signal
(24) PCS 5 Signal

(26) PSC 4 Signal
(27) Solenoid 2 Signal
(28) PS3
(32) PCS 2 Signal
(37) Solenoid 1 Signal
(38) PS4
(40) Exhaust Backfill
(41) Exhaust
(44) Void
(45) PCS 6 Signal

© Copyright Chevrolet. All rights reserved

Control Valve Channel Plate - Control Solenoid (w/Body and TCM) TEHCM Valve Side

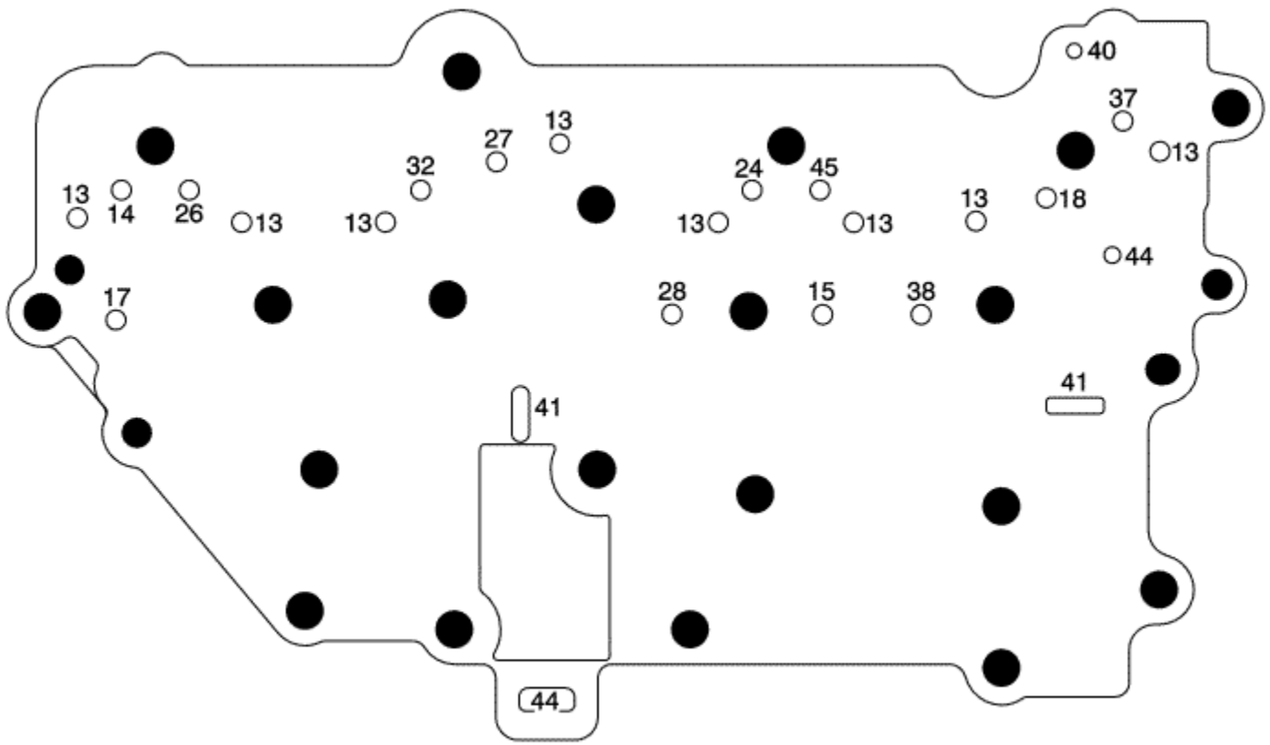

(13) Actuator Feed Limit
(14) PCS Line
(15) PS5
(17) PS1
(18) PCS 3 Signal
(24) PCS 5 Signal
(26) PSC 4 Signal

(27) Solenoid 2 Signal
(28) PS3
(32) PCS 2 Signal
(37) Solenoid 1 Signal
(38) PS4
(40) Exhaust Backfill
(41) Exhaust
(44) Void
(45) PCS 6 Signal

© Copyright Chevrolet. All rights reserved

Control Solenoid (w/Body and TCM) TEHCM Valve - Control Valve Channel Plate Side

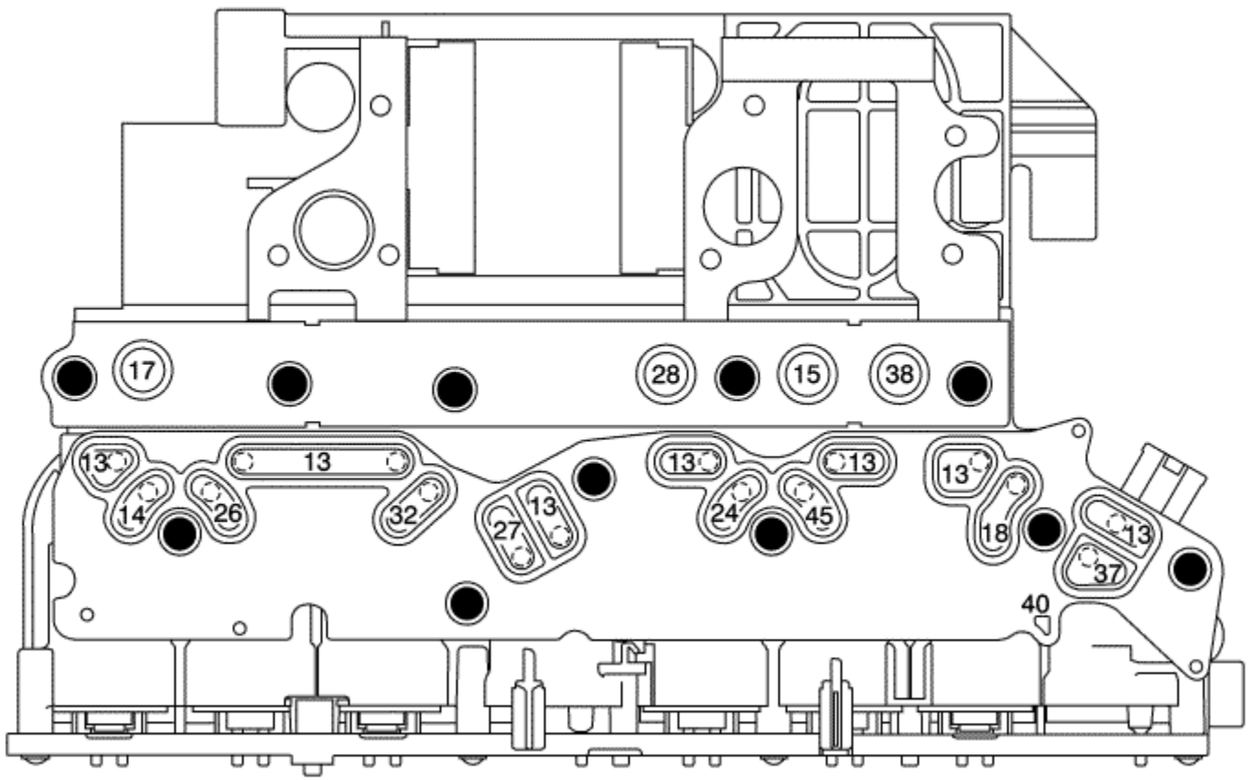

(13) Actuator Feed Limit
(14) PCS Line
(15) PS5
(17) PS1
(18) PCS 3 Signal
(24) PCS 5 Signal
(26) PSC 4 Signal

(27) Solenoid 2 Signal
(28) PS3
(32) PCS 2 Signal
(37) Solenoid 1 Signal
(38) PS4
(40) Exhaust Backfill
(45) PCS 6 Signal

© Copyright Chevrolet. All rights reserved

Case Extension Assembly - Case Side

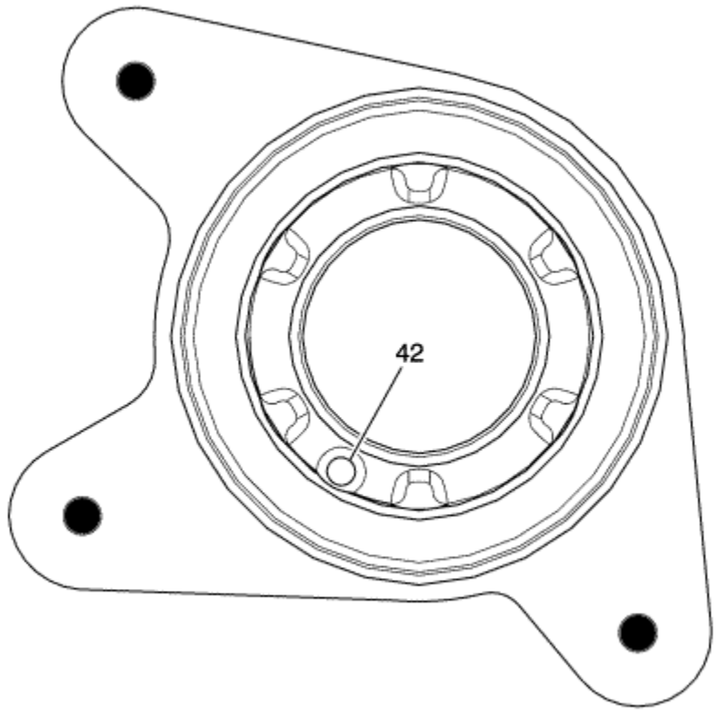

(42) Seal Drainback

© Copyright Chevrolet. All rights reserved

Front Bumper Upper Fascia Replacement - Ampera

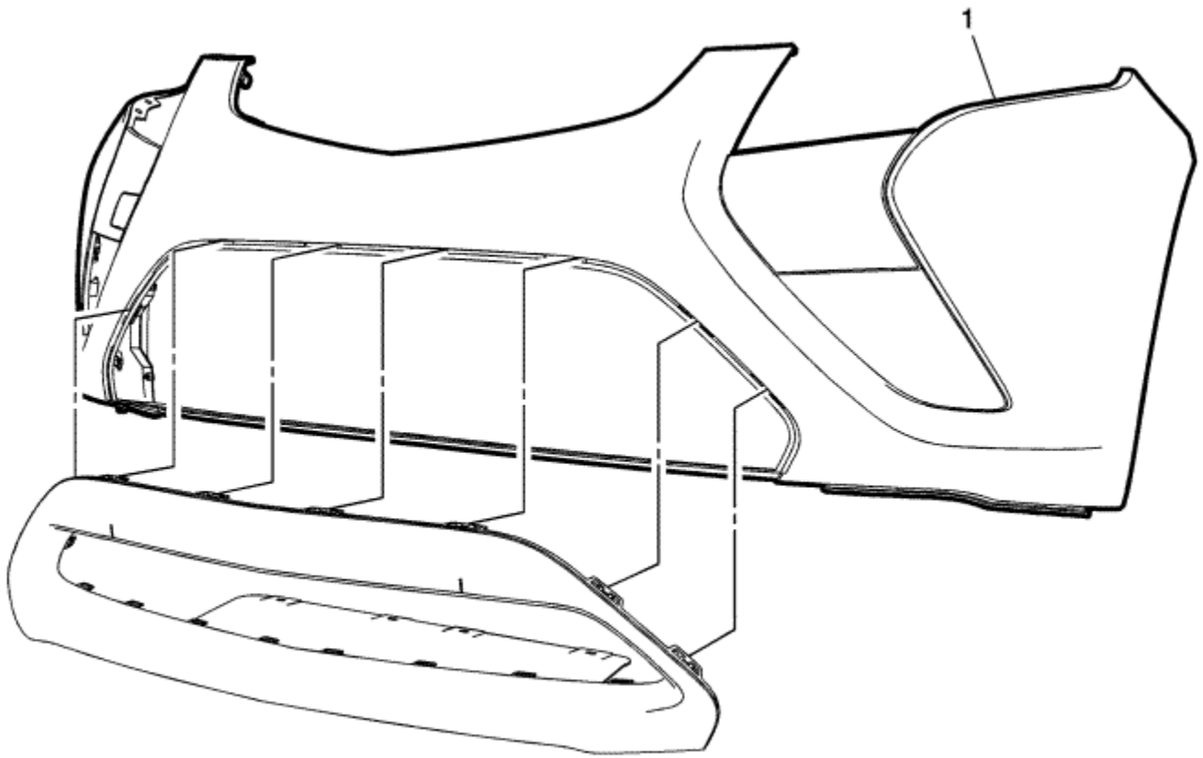

Callout	Component Name
Preliminary Procedures Remove the front bumper fascia. Refer to Front Bumper Fascia Removal and Installation : Volt → Ampera .	
	Front Bumper Upper Fascia

1	**Procedure** 1. Carefully push a small nylon wedge between the lower fascia and the upper fascia. Insert a small flat-bladed tool into the fascia slot and depress the tabs one at a time and pull on the upper fascia at the same time to gradually remove the upper fascia from the lower fascia. 2. Transfer parts as needed.

© Copyright Chevrolet. All rights reserved

Front Bumper Lower Impact Bar Replacement - Ampera

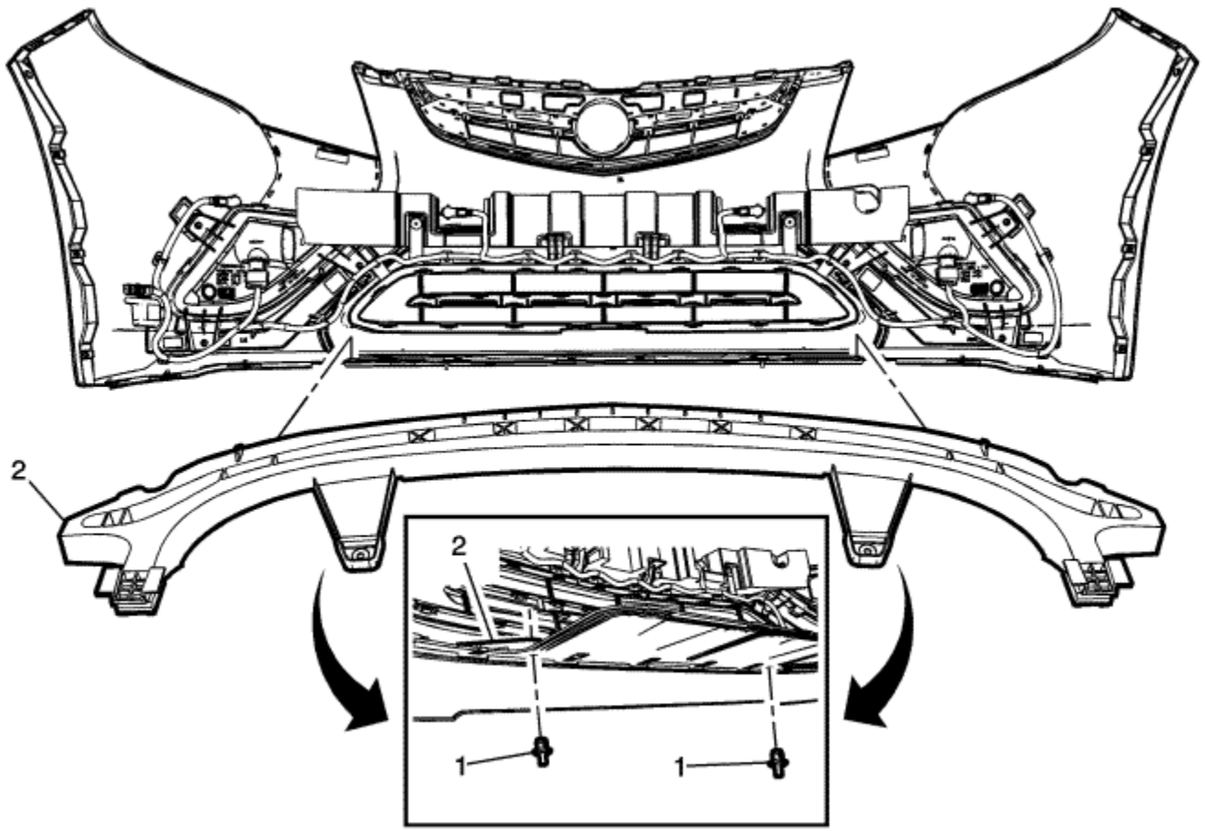

Callout	Component Name
Preliminary Procedure Remove the front bumper fascia. Refer to Front Bumper Fascia Removal and Installation : Volt → Ampera .	
1	Front Bumper Lower Impact Bar Fastener (Qty: 2)

	Caution : Refer to Fastener Caution in the Preface section.
2	Front Bumper Lower Impact Bar

© Copyright Chevrolet. All rights reserved

Demister

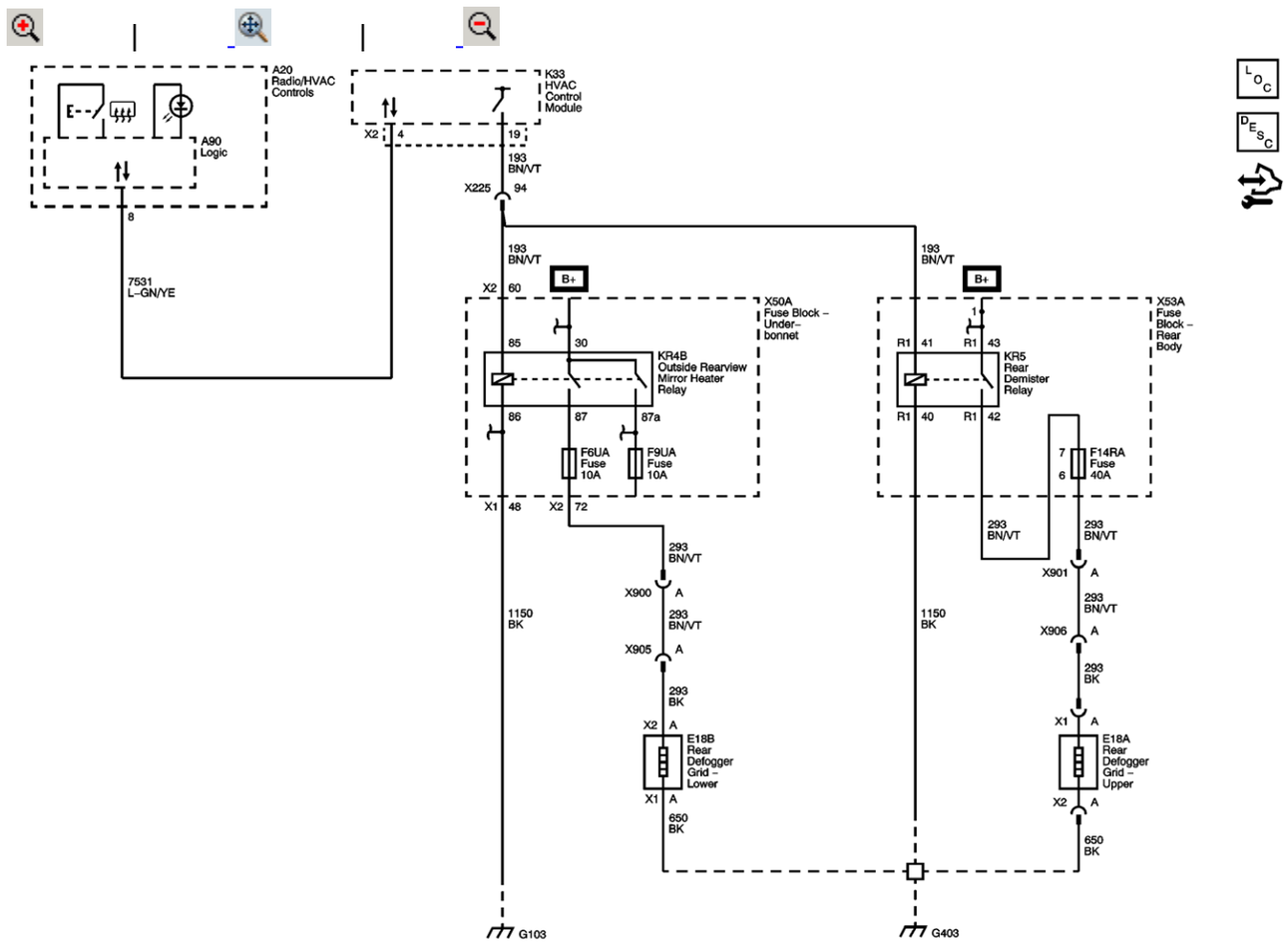
A20
Radio/HVAC
Controls
A90
Logic
8
7531
L-GN/YE
K33
HVAC
Control
Module
X2 4
19
193
BN/VT
X225 94
193
BN/VT
B+
X2 60
X50A
Fuse Block –
Under-
bonnet
85 30
KR4B
Outside Rearview
Mirror Heater
Relay
86 87 87a
F6UA
Fuse
10A
F9UA
Fuse
10A
X1 48 X2 72
293
BN/VT
X900 A
293
BN/VT
X905 A
293
BK
X2 A
E18B
Rear
Defogger
Grid –
Lower
X1 A
650
BK
1150
BK
G103
193
BN/VT
B+
1
X53A
Fuse
Block –
Rear
Body
R1 41 R1 43
KR5
Rear
Demister
Relay
R1 40 R1 42
7
6
F14RA
Fuse
40A
293
BN/VT
293
BN/VT
X901 A
293
BN/VT
X906 A
293
BK
X1 A
E18A
Rear
Defogger
Grid –
Upper
X2 A
650
BK
1150
BK
G403
LOC
DESC

Master Electrical Component List

Rear Window Demister Description and Operation

F6UA, F9UA, F22UA, F23UA, F40UA, F41UA and F43UA Fuses

F6RA, F11RA, F14RA and F16RA Fuses

G103, G104 and G105

G403

© Copyright Chevrolet. All rights reserved

Mobile Telephone

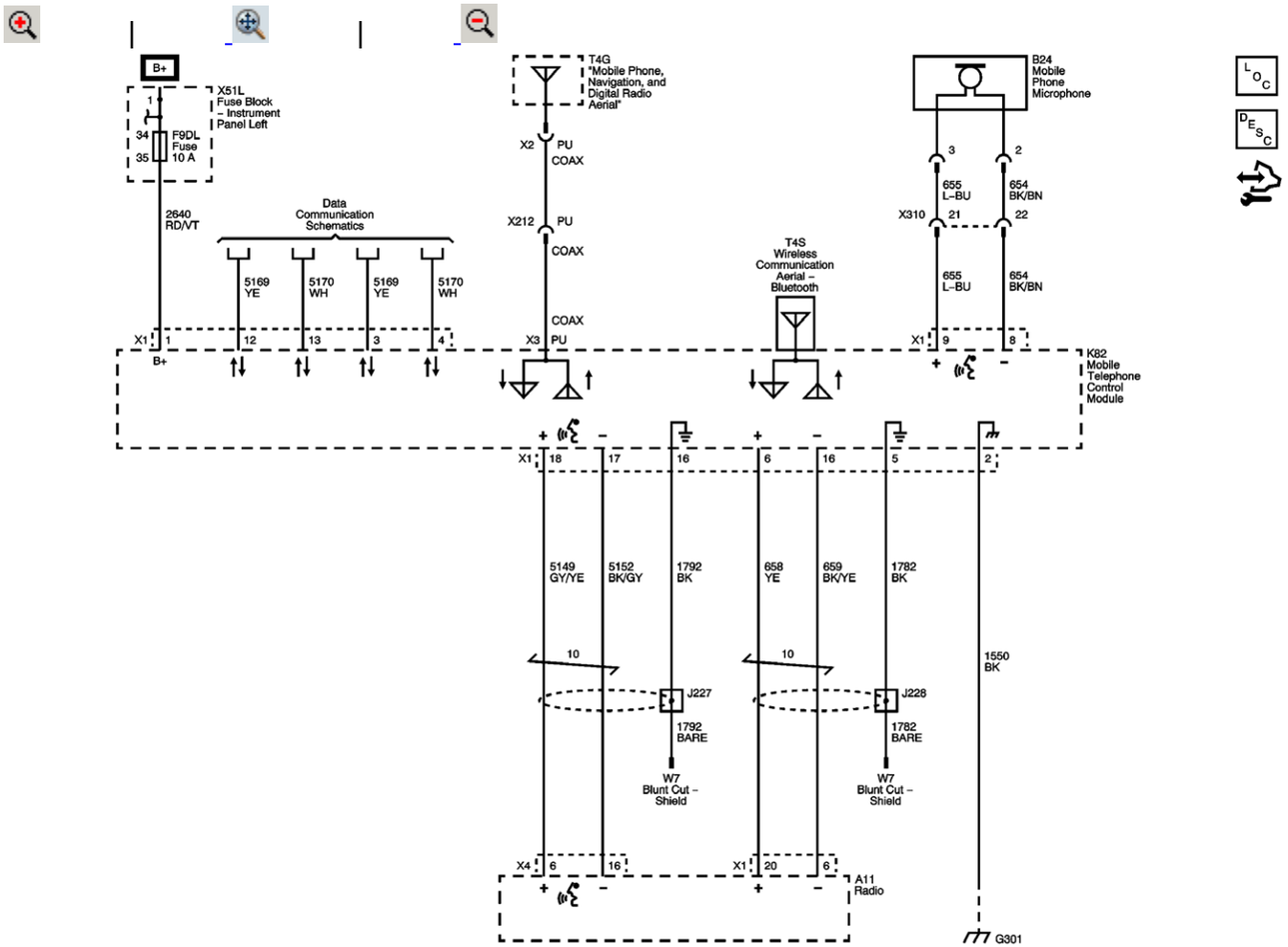

Master Electrical Component List

© Copyright Chevrolet. All rights reserved

Power, Ground, Serial Data, and Indicators

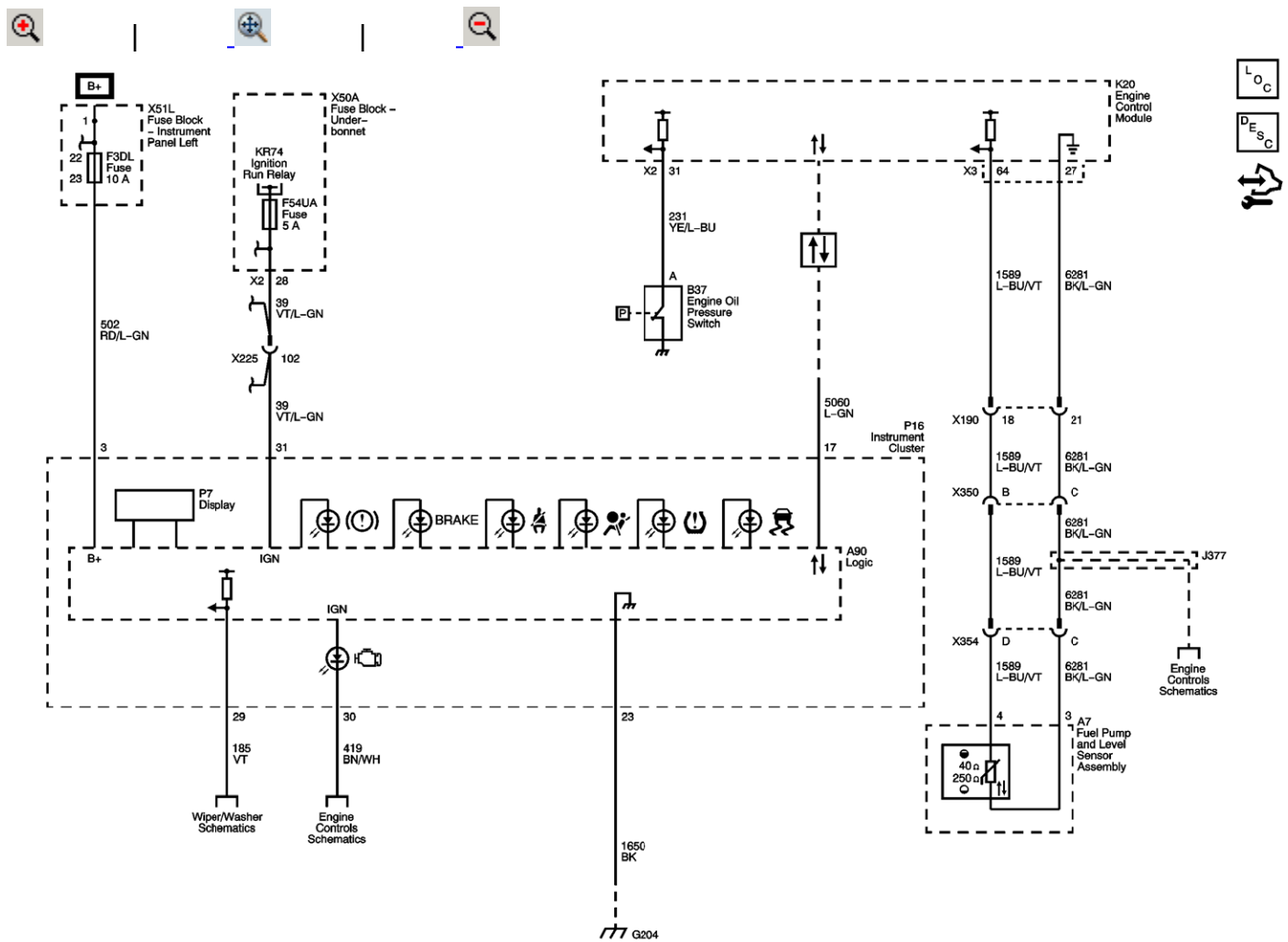

Master Electrical Component List

Instrument Cluster Description and Operation

F1DL, F2DL, F3DL, F4DL, F5DL, F6DL, F7DL, F10DL, F11DL and F15DL Fuses

F32UA, F33UA, F50UA, F51UA, F52UA, F53UA and F54UA Fuses

Data Communication Schematics

Windscreen Wiper/Washer

Power, Ground, MIL and Data Communication

G204

© Copyright Chevrolet. All rights reserved

Engine Cooling Fans

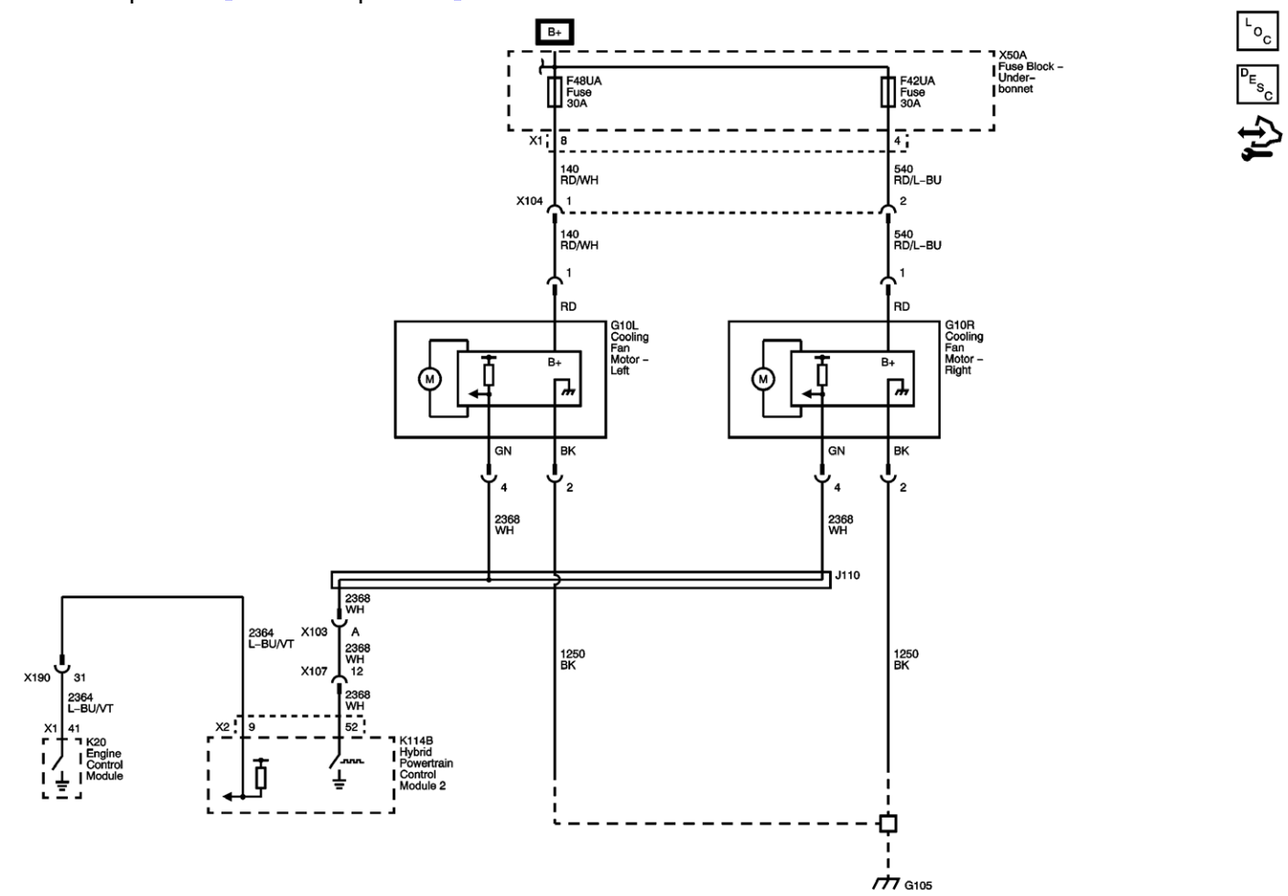

Master Electrical Component List

© Copyright Chevrolet. All rights reserved